

SPARE-PARTS CATALOGUE
CARS AND VANS

Ersatzteilekatalog
Pkw und Transporter

Catalogue de Pièces de Rechange
VL & VUL

Catalogo delle Parti di Ricambio
Vetture e Furgoni

Catálogo de Piezas de Recambio
Turismos y Furgonetas

2015

KEY TO SYMBOLS / Symbole / Légende / Simboli / Símbolos



Set of disc brake pads
Scheibenbremsbelag-Satz
Jeu de plaquettes de frein à disque
Serie pastiglie freno
Juego de pastillas de freno



Wear indicator
Verschleißanzeiger
Témoin d'usure
Indicatore d'usura
Indicador de desgaste



Solid brake disc
Massive Bremsscheibe
Disque de frein plein
Disco freno pieno
Disco de freno sólido



Solid brake disc with ABS-Sensorring
Massive Bremsscheibe mit ABS-Sensorring
Disque de frein plein avec bague du capteur pour ABS
Disco freno pieno con anello dentato per ABS
Disco de freno sólido con collar dentado por ABS



Solid brake disc wheel bearing
Massive Bremsscheibe mit Radlager
Disque de frein plein avec coussinet de roue
Disco freno pieno con cuscinetto integrato
Disco de freno sólido con cojinete integrado



Solid brake disc with ABS-Sensorring and wheel bearing
Massive Bremsscheibe mit ABS-Sensorring und Radlager
Disque de frein plein avec bague du capteur pour
ABS et coussinet de roue
Disco freno pieno con anello dentato per ABS e cuscinetto integrato
Disco de freno sólido con collar dentado por ABS y cojinete integrado



Ventilated brake disc
Belüftete Bremsscheibe
Disque de frein ventilé
Disco freno ventilato
Disco de freno ventilado



Ventilated brake disc with ABS-Sensorring
Belüftete Bremsscheibe mit ABS-Sensorring
Disque de frein ventilé avec bague du capteur pour ABS
Disco freno ventilato con anello dentato per ABS
Disco de freno ventilado con collar dentado por ABS



Ventilated brake disc with wheel bearing
Belüftete Bremsscheibe mit Radlager
Disque de frein ventilé avec coussinet de roue
Disco freno ventilato con cuscinetto integrato
Disco de freno ventilado con cojinete integrado



Ventilated brake disc with ABS-Sensorring and wheel bearing
Belüftete Bremsscheibe mit ABS-Sensorring und Radlager
Disque de frein ventilé avec bague du capteur pour
ABS et coussinet de roue
Disco freno ventilato con anello dentato per ABS e cuscinetto integrato
Disco de freno ventilado con collar dentado por ABS y cojinete integrado



Ventilated/drilled brake disc
Belüftete/gelochte Bremsscheibe
Disque de frein ventilé/percé
Disco freno ventilato/forato
Disco de freno ventilado/perforado



Slotted/internally vented brake disc
Geschlitzt/innenbelüftete Bremsscheibe
Disque de frein fendu/ventilé de l'intérieur
Disco freno intagliato/autoventilato
Disco de freno ranurado/vent. interior



Accessories for brake calipers
Zubehörsatz für Bremssättel
Jeu d'accessoires pour étriers de frein
Serie accessori per pinze freno
Juego de accesorios para pinzas de freno



Accessories for disc brake pads
Zubehörsatz für Scheibenbremsbeläge
Jeu d'accessoires pour plaquettes
de frein à disque
Serie accessori per pastiglie freno
Juego de pastillas de freno con accesorios



Fixing screws for brake discs
Fixierschrauben für Bremsscheiben
Vis de fixation pour disque de frein
Viti di fissaggio per dischi freno
Tornillos de fijación para discos de freno



Set of brake shoes
Bremsbacken-Satz
Jeu de mâchoires
Serie ganasce freno
Juego de mordazas



Brake drum kit
Bremsbackensatz-Kit
Kit de freins
Kit per freni a tamburo
Kit de freno de tambor

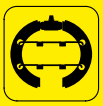

Pre-assembled brake drum kit
Bremsbackensatz-Kit vormontiert
Kit de freins prémonté
Kit preassemblato per freni a tamburo
Kit premontado de freno de tambor



Brake drum
Bremstrommel
Tambour de frein
Tamburo freno
Tambor de freno



Brake drum with wheel hub
Bremstrommel mit Radnabe
Tambour de frein avec moyeu
Tamburo freno con mozzo ruota
Tambor de freno con cubo de rueda



Brake drum with wheel bolt
Bremstrommel mit Radbefestigungsbolzen
Tambour de frein avec écrou
Tamburo freno con bullone ruota
Tambor de freno con espárragos de fijación de rueda



Brake drum with ABS sensor
Bremstrommel mit ABS-Sensorring
Tambour de frein avec capteur ABS
Tamburo freno con sensore ABS
Tambor de freno con anillo sensor ABS



Brake drum with wheel bearing
Bremstrommel mit Radlager
Tambour de frein avec roulements
Tamburo freno con cuscinetti ruota
Tambor de freno con cojinete de rueda



Brake drum with wheel hub and wheel bolt
Bremstrommel mit Radnabe und Radbefestigungsbolzen
Tambour de frein avec moyeu et écrou
Tamburo freno con mozzo ruota e bullone ruota
Tambor de freno con cubo de rueda y
espárragos de fijación de rueda



Brake drum with wheel hub and wheel bearing
Bremstrommel mit Radnabe und Radlager
Tambour de frein avec moyeu et coussinet de roue
Tamburo freno con mozzo ruota e cuscinetto integrato
Tambor de freno con cubo de rueda y cojinete integrado

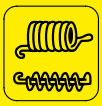

Set of accessories for brake shoes
Zubehörsatz für Bremsbacken
Jeu d'accessoires pour mâchoires
Serie accessori per ganasce freno
Juego de accesorios para mordazas



Set of brake shoes/pads for handbrake
Bremsbelag-Satz für Handbremse
Jeu de garnitures de frein à main
Serie guarnizioni per freno a mano
Juego de mordazas para freno de mano



Accessory kit, parking brake shoes
Zubehörsatz, Feststellbremsbacken
Kit d'accessoires, mâchoires de frein de stationnement
Kit addizionale ganasce freno di stazionamento
Juego de accesorios, mordazas de freno
de estacionamiento

MODEL / Aufbauart / Type de carrosserie / Tipo carrozzeria / Tipo de carrocería



Box Body/Estate

Kasten/Kombi
Camionnette/Break
Cassone/Furgonato/Promiscuo
Furgón/Ranchera familiar



Hatchback

Schrägheck
Hayon
Hatchback
Fastback



Saloon

Stufenheck
Berline
Berlina
Sedán



Estate

Kombi
Break
Familiare
Ranchera familiar



MPV

Großraumlimousine
Monospace
Monovolume
Limusina



Coupé

Coupé
Coupé
Coupé
Coupé



Convertible

Cabriolet
Décapotable
Cabriolet
Descapotable



Targa

Targa
Targa
Targa
Targa



Pickup

Pick-up
Pick-up
Pick-up
Pick-up



Flatbed / Chassis

Pritsche/Fahrgestell
Camion plate-forme/Châssis
Pianale piatto/Telaio
Caja/Chasis



Bus

Bus
Autobus/Autocar
Pullmino
Autobús



Box

Kasten
Camionnette
Furgonato
Furgoneta

Open off-road vehicle

Geländewagen offen
Véhicule tout terrain à carrosserie ouverte
Fuoristrada aperto
Todo terreno, abierto

Closed off-road vehicle

Geländewagen geschlossen
Véhicule tout terrain à carrosserie fermée
Fuoristrada chiuso
Todo terreno, cerrado

HOW TO USE THIS CATALOGUE / So benutzen Sie den Katalog / Comment utiliser ce catalogue / Come usare questo catalogo / Como usar este catálogo

Year built type
Baujahr des Typs
Millésime
Anno di fabbricazione del componente
Año construcción tipo

kW/hp
kW/PS
kW/c.v.
kW/c.v.
kW/c.v.

Year built model series
Baujahr der Modellreihe
Millésime
Anno modello
Año construcción modelo

Front axle
Vorderachse
Train avant
Asse anteriore
Eje delantero

Rear axle
Hinterachse
Train arrière
Asse posteriore
Eje trasero

Manufacturer
Hersteller
Constructeur
Construttore
Fabricante

Model
Aufbauart
Type de carrosserie
Tipo carrozzeria
Tipo de carrocería

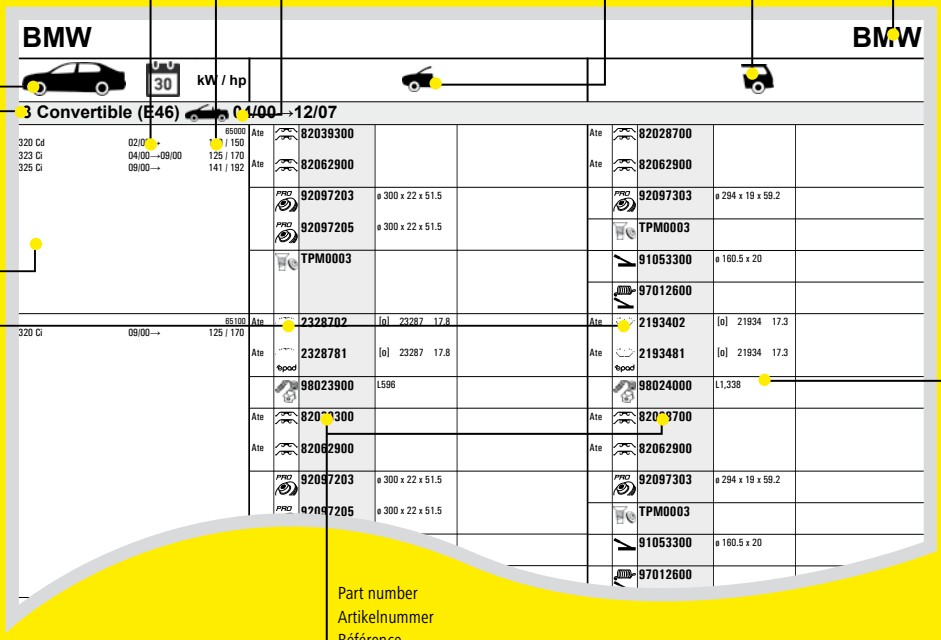

Model series
Modellreihe
Numéro de série du modèle
Serie modello
Serie del modelo

Type/Typ/Type/Tipo/Tipo

Part icon/image
Produktgruppensymbol/ Abbildung
Famille de produits
Icona pezzo/illustrazione
Icono del recambio/ imagen

Additional information
Artikelkriterien
Cotes des produits
Test di verifica dell'articolo
Criterios del artículo

Part number
Artikelnummer
Référence
Numero di articolo
Referencia

ADDITIONAL INFORMATION / Artikelkriterien / Caractéristiques / Test di verifica dell'articulo / Criterios del artículo

[-]	without wear indicator device ohne Verschleißanzeigervorrichtung sans témoin d'usure escluso dispositivo indicatore d'usura sin dispositivo indicador de desgaste	W	width Breite largeur larghezza anchura	iaL	inner arc lenght innere Bogenlänge longueur d'arc intérieur lunghezza arco interno longitud interna del arco
[O]	with wear indicator device mit Verschleißanzeigervorrichtung avec témoin d'usure con dispositivo indicatore d'usura con dispositivo indicador de desgaste	H	height Höhe hauteur altezza altura	drum Ø	drum diameter Trommeldurchmesser diamètre du tambour diametro del tamburo diámetro del tambor
[+]	with integrated wear indicator or enclosed wear indicator mit Verschleißanzeiger integriert oder Verschleißanzeiger beigefügt avec indicateur d'usure intégré ou indicateur sonore d'usure con indicatore d'usura incorporato o aggiunto con indicador de desgaste incorporado o con indicador de desgaste incluido	L	length Länge longueur lunghezza longitud	IH	inner height innere Höhe hauteur intérieure altezza interna altura interior
Ø	diameter Durchmesser diamètre diametro diámetro	TH	thickness Dicke épaisseur spessore espesor		

KBA TSN NO. / KBA-Typschlüsselnummern

KBA list for Germany only / KBA-Liste nur für Deutschland

Die Ersatzteilzuordnung bei Fahrzeugen ist auch mithilfe der KBA-Typschlüsselnummer und der Katalogblocknummer möglich (siehe Beispiel).
Die Übersicht der KBA-Typschlüsselnummer finden Sie im Downloadbereich unter www.textar.brakebook.com

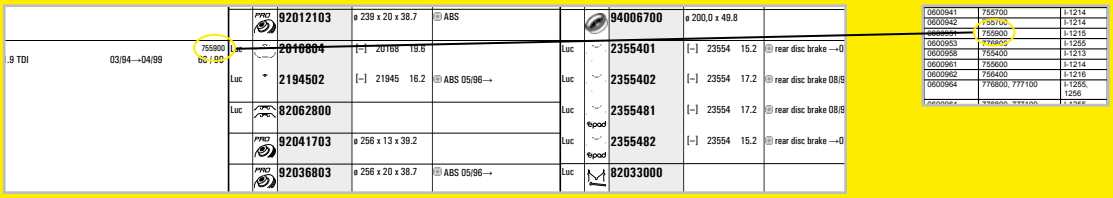

brakebook

TEXTAR
BRAKE TECHNOLOGY

Brakebook – Your personal online catalogue and marketing service

Brakebook – Ihr persönlicher Online-Katalog und Marketing Service
Brakebook – vos catalogues en ligne et services marketing personnalisés
Brakebook – Il catalogo online sempre a tua disposizione
Brakebook – su catálogo online y servicio de marketing personales

The Brakebook App is also available for Android and iPhone.
Get up-to-the-minute access to the Textar catalogue with user-friendly product search options.

Brakebook ist auch als App für Android und iPhone verfügbar!
Erhalten Sie direkten Zugriff auf topaktuelle Textar Katalogdaten – in Echtzeit!

Brakebook est également disponible comme appli pour Android et iPhone !
Accédez directement aux dernières données du catalogue en temps réel !

Brakebook è anche disponibile come App per Android e iPhone!
Assicuratevi l'accesso diretto a dati del catalogo Textar aggiornatissimi - tutto ciò in tempo reale!

Brakebook también está disponible como App para Android y iPhone.
Obtenga acceso directo a los datos de catálogo más actuales de Textar en tiempo real.



Download on the App Store

GET IT ON Google play

www.brakebook.com

TEXTAR®

BRAKE TECHNOLOGY

SPARE-PARTS CATALOGUE
CARS AND VANS

Ersatzteilekatalog
Pkw und Transporter

Catalogue de Pièces de Rechange
VL & VUL

Catalogo delle Parti di Ricambio
Vetture e Furgoni

Catálogo de Piezas de Recambio
Turismos y Furgonetas

Our catalogues are designed to make your day-to-day work easier. To improve usability, we decided not to increase the number of pages.
Therefore, this catalogue only covers vehicles built between * 01/1999 and 11/2014 (*Example: VW Golf IV 1.8, built between 08/1997 and 06/2005).
You will find the other products in the Textar online catalogue at: **www.textar.brakebook.com**

Wir möchten Ihnen mit unseren Katalogen den Arbeitsalltag erleichtern. Um den Seitenumfang zugunsten einer besseren Nutzbarkeit nicht weiter zu erhöhen, umfasst dieser Katalog Fahrzeuge mit einem Baujahr einschließlich* 01/1999 bis 11/2014 (*Beispiel: VW Golf IV 1,8 Baujahr 08/1997-06/2005).
Produkte, die nicht in diesem Katalog enthalten sind, finden Sie im Textar Online Katalog: **www.textar.brakebook.com**

Le but de nos catalogues est de faciliter votre travail au quotidien. Pour rendre leur utilisation encore plus facile, nous avons décidé de ne pas en augmenter le nombre de pages. Ce catalogue répertorie donc les véhicules produits entre* 01/1999 et 11/2014 (*exemple : VW Golf IV 1,8 année 08/1997 à 06/2005).
Vous trouverez tous les autres produits dans le catalogue en ligne de Textar sur **www.textar.brakebook.com**

Con i nostri cataloghi desideriamo semplificarvi il lavoro quotidiano. Per non aumentare ulteriormente il numero di pagine a tutto vantaggio di un uso più agevole, questo catalogo riporta veicoli con anno di costruzione che arriva al 01/1999 e fino al 11/2014 compresi* (*esempio: VW Golf IV 1,8 anno di costruzione 08/1997-06/2005).
I prodotti non compresi nel presente catalogo sono riportati nel catalogo on-line di Textar: **www.textar.brakebook.com**

Con nuestros catálogos deseamos hacerle el día a día más fácil. Para no aumentar aún más el número de páginas y dificultar así el uso, este catálogo solo incluye vehículos construidos entre* enero de 1999 y noviembre de 2014, ambos incluidos (*Ejemplo: VW Golf IV 1,8 año de construcción 08/1997-06/2005).
Los productos que no están contenidos en este catálogo están disponibles en el catálogo online de Textar: **www.textar.brakebook.com**

TEXTAR
BRAKE TECHNOLOGY

Due to the diverse range of models and spare parts of automotive manufacturers, it is not always possible to assign the articles precisely. For this reason, please note the remarks and parts description given.

Durch die Modell- und Ersatzteilvielfalt der Automobilhersteller ist eine genaue Zuordnung der Artikel nicht immer möglich. Daher sind die aufgeführten Bemerkungen und Teilebeschreibungen zu beachten.

	GB	D
⊖	except/models except	ohne/Modelle ohne
⊖ ... PS	engine output to [HP]	Leistung bis [PS]
⊖ arm. veh.	not for armed vehicles	nicht für gepanzerte Fahrzeuge
⊖ AUS	not for Australia	nicht für Australien
⊖ axle load ... t	to axle load [t]	bis Achslast [t]
⊖ California	not for California	nicht für Kalifornien
⊖ CDN	not for Canada	nicht für Kanada
⊖ D	not for Germany	nicht für Deutschland
⊖ governm. veh.	not for government vehicles	nicht für Behördenfahrzeuge
⊖ J	not for Japan	nicht für Japan
⊖ police veh.	not for police vehicles	nicht für Polizeifahrzeuge
⊖ post veh.	not for post office vehicles	nicht für Postfahrzeuge
⊖ rental veh.	not for rental vehicles	nicht für Mietfahrzeuge
⊖ spec.purp.veh.	not for special purpose vehicles	nicht für Sondereinsatzfahrzeuge
⊖ taxi veh.	not for taxis	nicht für Taxifahrzeuge
⊖ UAE	not for United Arab Emirates	nicht für Vereinigte Arabische Emirate
⊖ USA	not for USA	nicht für USA
⊖ XX/YY	to construction year	bis Baujahr
⊖ XXXXX	to RP number	bis Organisationsnummer
⊖ XXXXXX	to VET number	bis VET-Nummer
⊖ XXXXXXX	to chassis number	bis Fahrgestellnummer
... -axle	axle version	Achsausführung
... -brake	brake system	Bremssystem
... cyl.	number of cylinders	Zylinderanzahl
... doors	number of doors	Anzahl der Türen
... holes	holes	Löcher
... kg payload	payload [kg]	Nutzlast [kg]
... -made	vehicle production country	Fahrzeugproduktionsland
... mm hub-Ø	wheel hub diameter [mm]	Radnabendurchmesser [mm]
... mm piston Ø	piston diameter [mm]	Zylinderkolbendurchmesser [mm]
... pcs. WI-fastener	pieces wear indicator fastener	Stück Warnkontaktsicherung
... PS -	engine output from [HP]	Leistung von [PS]
... seats	number of seats	Sitzplätze
⊕	with/models with/only	mit/Modelle mit/nur
⊕ arm. veh.	for armed vehicles	für gepanzerte Fahrzeuge
⊕ AUS	for Australia	für Australien
⊕ California	for California	für Kalifornien
⊕ CDN	for Canada	für Kanada
⊕ D	for Germany	für Deutschland
⊕ Europe	for Europe	für Europa
⊕ governm. veh.	for government vehicles	für Behördenfahrzeuge
⊕ J	for Japan	für Japan
⊕ N	for Norway	für Norwegen
⊕ police veh.	for police vehicles	für Polizeifahrzeuge
⊕ post veh.	for post office vehicles	für Postfahrzeuge
⊕ rental veh.	for rental vehicles	für Mietwagen
⊕ spec. purp. veh.	for special purpose vehicles	für Sondereinsatzfahrzeuge
⊕ taxi veh.	for taxis	für Taxifahrzeuge
⊕ UAE	for United Arab Emirates	für Vereinigte Arabische Emirate
⊕ UK	for United Kingdom	für Großbritannien
⊕ USA	for USA	für USA
1 plug	1 plug	ein Stecker
1. oversize	1. oversize	1. Übermaß
2 plugs	2 plugs	zwei Stecker
2. front axle	2. front axle	2. Vorderachse
2. rear axle	2. rear axle	2. Hinterachse
3rd seating row	3rd seating row	3. Sitzreihe
5-speed man.	manual transmission, 5-speed	Schaltgetriebe 5-Gang
ABS	ABS	ABS
ABS-sensorring	ABS-Sensorring	ABS-Sensorring
air appl. brake.	air application brake	Druckluft

Il n'est pas toujours possible de déterminer exactement un article en raison du grand nombre de modèles et de pièces de rechange proposés par l'industrie automobile.	A causa della grande varietá di modelli e parti di ricambio dei costruttori di automobili, non è sempre possibile identificare esattamente gli articoli. Per questo motivo vanno rispettate le annotazioni e descrizioni delle parti.	A causa de la gran diversidad de modelos y recambios de los fabricantes de automóviles, no siempre es posible determinar exactamente un artículo. Por la tanto, hay que tener en cuenta las observaciones y las descripciones de las piezas.
F	**I**	**E**
sans/type sans	senza/modello senza	sin/modelos sin
puissance jusque [CV]	potenza motore fino a [CV]	potencia [CV] hasta
sauf véhicules blindés	non per veicoli blindati	no para vehículos blindados
sauf en Australie	non per l'Australia	no para Australia
charge sur l'essieu jusqu'à [t]	fino a carico assiale [t]	hasta carga de eje [t]
sauf en Californie	non per la California	no para California
sauf au Canada	non per il Canada	no para Canadá
sauf en Allemagne	non per la Germania	no para Alemania
sauf véhicules officiels	non per veicoli dell'amministrazione pubblica	no para vehículos admon. pública
sauf au Japon	non per il Giappone	no para Japón
sauf véhicules de police	non per veicoli della polizia	no para vehículos de la policía
sauf pour véhicules postaux	non per veicoli del servizio postale	no para vehículos de correos
sauf pour voitures de location	non per veicoli a noleggio	no para vehículos de alquiler
sauf pour véhicules spéciaux	non per veicoli ad uso speciale	no para vehículos con fines especiales
sauf pour taxis	non per taxi	no para taxis
sauf pour les Emirats Arabes Unis	non per gli Emirati Arabi Riuniti	no para los Emiratos Árabes Unidos
sauf pour les Etats-Unis	non per gli USA	no para EE. UU.
jusqu'à l'année de construction	fino all'anno di costruzione	hasta año de construcción
jusqu'au nº d'organisation	fino al n° controllo	hasta nº de organización
jusqu'au nº de VET	fino al n° VET	hasta nº VET
jusqu'au nº de châssis	fino al n° telaio	hasta nº de chasis
type d'essieu	tipo di asse	tipo de eje
système de freinage	sistema frenante	sistema de frenos
nombre de cylindres	numero cilindri	número de cilindros
nombre de portes	numero porte	número de puertas
trous	fori	agujeros
charge utile [kg]	portata utile [kg]	carga útil [kg]
pays constructeur du véhicule	paese produzione veicolo	país de producción vehículo
diamètre moyeu de roue [mm]	diametro mozzo ruota [mm]	diám. cubo rueda [mm]
diamètre de piston de cylindre [mm]	diametro pistone cilindro [mm]	diámetro del cilindro del pistón [mm]
pc. éléments de fixation pour indicateur d' usure	numero protezioni contatti segnalatori	uds. sujeción indicador de desgaste
puissance à partir de [CV]	potenza da [CV]	potencia [CV] desde
nombre de sièges	numero posti a sedere	número de asientos
avec/modèles avec/seulement	con/modelli con/solo	con/modelos con/sólo
véhicule blindé	veicoli blindati	vehículos blindados
pour l'Australie	per l'Australia	para Australia
pour la Californie	per la California	para California
pour le Canada	per il Canada	para Canadá
pour l'Allemagne	per la Germania	para Alemania
pour l'Europe	per l'Europa	para Europa
pour véhicules officiels	per veicoli dell'amministrazione pubblica	para vehículos admon. pública
pour le Japon	per il Giappone	para Japón
pour la Norvège	per la Norvegia	para Noruega
pour véhicules de police	per veicoli della polizia	para vehículos de la policía
pour véhicules postaux	per veicoli per servizio postale	para vehículos de correos
pour voitures de location	per veicoli a noleggio	para vehículos de alquiler
pour véhicules spéciaux	per veicoli ad uso speciale	para vehículos con fines especiales
pour taxis	per taxi	para taxis
pour les Emirats Arabes Unis	per gli Emirati Arabi Riuniti	para los Emiratos Árabes Unidos
pour le Royaume-Uni	per la Gran Bretagna	para Gran Bretaña
pour les Etats-Unis	per gli USA	para EE. UU.
1 prise/1 fiche	monospina	un conector
cote Réparation (+1)	1a sovramisura	1. sobremedida
deux prises	due spine/cappucci	dos conectores
2. Essieu AV	2° asse anteriore	2. eje delantero
2. Essieu AR	2° asse posteriore	2. eje trasero
3e rangée de sièges	3a fila sedili	3 hileras de asientos
boîte de vitesses man., à 5 vit.	cambio manuale, a 5 marce	manual, 5 vel.
ABS	ABS	ABS
avec paliers de secours ABR	con anello sensore ABS	con anillo sensor ABS
frein pneumatique	aria compressa	aire comprimido

TEXTAR
BRAKE TECHNOLOGY

Due to the diverse range of models and spare parts of automotive manufacturers, it is not always possible to assign the articles precisely. For this reason, please note the remarks and parts description given.

Durch die Modell- und Ersatzteilvielfalt der Automobilhersteller ist eine genaue Zuordnung der Artikel nicht immer möglich. Daher sind die aufgeführten Bemerkungen und Teilebeschreibungen zu beachten.

	GB	D
air cond.	air conditioning	Klimaanlage
AMG sport pack.	AMG sports package	AMG-Sportpaket
arm.veh.	armed vehicles	gepanzerte Fahrzeuge
ASR	ASR	ASR
autom adjustm.	automatic adjustment	automatische Nachstellung
autom.	automatic transmission	Automatikgetriebe
autom. clim. contr.	automatic climate control	Klimaautomatik
auxiliary axle	auxiliary axle	Zusatzachse
AWD	all wheel drive	Allrad
axle load ... t	axle load [t]	Achslast [t]
axle load ... t -	from axle load [t]	ab Achslast [t]
bad road pack.	off-road suspension	Schlechtwegeausführung
BM ...	model	Baumuster
bore ø	bore diameter	Zylinderdurchmesser
brake booster	brake booster	Bremskraftverstärker
brake power regul.	brake power regulator	Bremskraftregler
cage disc	cage disc	Käfig-Bremsscheibe
cal. + 1 holding pin	brake caliper with 1 holding pin	Bremssattel mit 1 Haltestift
cal. + 2 holding pins	brake caliper with 2 holding pins	Bremssattel mit 2 Haltestiften
ceramic brake	ceramic brakes	Keramikbremse
ceramic disc	ceramic disc	Keramikbremsscheibe
countersunk head	countersunk head	Senkkopf
cut out in shoe	cut-out in shoe	Aussparung in Bremsbackenmitte
cyl. head	cylinder head	Zylinderkopf
decreased payload	reduced payload	reduzierte Nutzlast
disc brake	disc brake	Scheibenbremse
disc brakes on the rear	disc brakes on the rear axle	Scheibenbremse an der Hinterachse
disc-/drum brake	disc/drum brake	Scheiben-/Trommelbremse
drum brake	drum brake	Trommelbremse
drum brakes on the rear	drum brakes on the rear axle	Trommelbremse an der Hinterachse
dual tyres	dual tyres	Doppelbereifung
dumper	dumper	Kipper
elec.	electric	elektrisch
elec. damp. susp.	electronic suspension control	elektr. Dämpferregulierung
elect. handbrake	electric handbrake	elektronische Feststellbremse
emission red. veh.	emission controlled vehicles	abgasentgiftete Fahrzeuge
engine ...	engine code	Motorcode
ESP	ESP	ESP
ext.wheelbase	extended wheelbase	verlängerter Radstand
externally vented	externally vented	außenbelüftet
extreme (taxi, post and police)	extreme (for taxi, post and police)	extreme (für Taxi, Post und Polizei)
FA	fitting position: front axle	Einbauseite: Vorderachse
Fist-type cal.	fist type caliper	Faustsattel
Fist-type cal. (2 pist.)	fist type caliper (2 pistons)	Faustsattel (2-Kolben)
Fixed cal.	fixed caliper	Festsattel
Fixed cal. (2 pist.)	fixed caliper (2 pistons)	Festsattel (2-Kolben)
Fixed cal. (4 pist.)	fixed caliper (4 pistons)	Festsattel (4-Kolben)
flat plug	blade terminal	Flachstecker
float. cal.	floating caliper	Schwimmsattel
Frame saddle	frame saddle	Rahmensattel
France-made	vehicle made in France	Fahrzeugproduktionsland: Frankreich
front-wheel drive	front-wheel drive	Frontantrieb
FWD	front-wheel drive	Frontantrieb
governm. veh.	government vehicles	Behördenfahrzeuge
H ... mm	height [mm]	Höhe [mm]
hub disc	hub disc	Nabenscheibe
Hungary-made	vehicle made in Hungary	Fahrzeugproduktionsland: Ungarn
hydro pneum. susp.	hydro-pneumatic suspension	hydro-pneumatische Federung
i.W.I.	integrated wear sensor	integrierter Verschleißsensor
increased payload	increased payload	erhöhte Nutzlast
internally vented	internally vented	innenbelüftet

Il n'est pas toujours possible de déterminer exactement un article en raison du grand nombre de modèles et de pièces de rechange proposés par l'industrie automobile.	A causa della grande varietá di modelli e parti di ricambio dei costruttori di automobili, non è sempre possibile identificare esattamente gli articoli. Per questo motivo vanno rispettate le annotazioni e descrizioni delle parti.	A causa de la gran diversidad de modelos y recambios de los fabricantes de automóviles, no siempre es posible determinar exactamente un artículo. Por la tanto, hay que tener en cuenta las observaciones y las descripciones de las piezas.
F	I	E
système de climatisation	aria condizionata	climatizador
équipement sport AMG	pacchetto sportivo AMG	paquete sport AMG
véhicule blindé	veicoli blindati	vehículos blindados
ASR	ASR	ASR
réglage automatique	regolazione automatica	reajuste automático
transmission automatique	trasmissione automatica	transmisión automática
climatisation automatique	climatizzatore automatico	climatizador automático
essieu additionnel	asse ausiliario	eje adicional
traction intégrale	4 ruote motrici	a las 4 ruedas
charge [t]	carico assiale [t]	carga del eje [t]
à partir de [t] de charge d'essieu	da carico assiale [t]	desde carga de eje [t]
préparé pour routes dégradées	dotazione per strade dissestate	dispositivo auxiliar para rutas en malas condiciones
modèle type	modello	modelo de construcción
diamètre cylindre	alesaggio	diámetro del cilindro
dispositif d'assistance de frein	servofreno	servofreno
régulateur de force de freinage	correttore di frenata	regulador de fuerza de frenado
disque cage	disco del freno a gabbia	disco de freno tipo jaula
étrier à une goupille	pinza freno con 1 spina di fermo	pinza de freno con 1 pasador de soporte
étrier à deux goupilles	pinza freno con 2 spine di fermo	pinza de freno con 2 pasadores de soporte
frein en céramique	freni in ceramica	frenos de cerámica
disque en céramique	disco del freno in ceramica	disco de freno de cerámica
tête fraisée	testa svasata	cabeza avellanada
évidement au centre de la mâchoire	cavità al centro ganascia del freno	escotadura en centro de la zapata de freno
culasse de cylindre	testa cilindro	cabeza cilíndrica
charge utile réduite	portata utile ridotta	carga útil reducida
frein à disque	freno a disco	discos
frein à disque à l'essieu arrière	freni a disco all'asse posteriore	freno de disco en eje trasero
frein à disque/tambour	freno a disco/tamburo	freno de discos/tambor
frein à tambour	freno a tamburo	freno de tambor
frein à tambour à l'essieu arrière	freni a tamburo all'asse posteriore	freno de tambor en eje trasero
pneus doubles	pneumatici gemellati	neumáticos gemelos
camion à benne	ribaltabile	volquete
électrique	elettrico	eléctrico
réglage d'amortisseur électronique	regolazione elettr. ammortizzatori	regulación eléctrica de amortiguación
frein d'arrêt électronique	freno stazionam. elettronico	freno de detención electrónico
émissions de gaz limitées	veicolo a emissioni ridotte	decontaminación de gases
code moteur	codice motore	código de motor
ESP	ESP	ESP
empattement rallongé	passo allungato	distancia entre ejes prolongada
ventilé de l'extérieur	con ventilazione esterna	ventilación externa
extrême (pour taxis, véhicules de la poste et de la police)	extreme (per taxi, poste, polizia)	extreme (para taxis, vehículos de correos y de policía)
montage : essieu AV	lato montaggio: asse anteriore	lado de montaje: eje delantero
étrier flottant	pinza a pugno	montura de puño
étrier flottant (2 pistons)	pinza a pugno (2 pistoni)	montura de puño (2 émbolos)
étrier fixe	pinza fissa	montura fija
étrier fixe (2 pistons)	pinza fissa (2 pistoni)	montura fija (2 émbolos)
étrier fixe (4 pistons)	pinza fissa (4 pistoni)	montura fija (4 émbolos)
fiche plate	spina piatta	conector plano
étrier flottant	pinza flottante	montura flotante
étrier cadre	pinza telaio	pinza de marco
véhicule fabriqué en France	veicolo prodotto in Francia	país de producción del vehículo: Francia
traction avant	trazione anteriore	tracción delantera
traction avant	trazione anteriore	tracción delantera
véhicule d'administration	veicoli dell'amministrazione pubblica	para vehículos admon. pública
hauteur [mm]	altezza [mm]	altura [mm]
disque de moyeu	disco mozzo	disco de buje
véhicule fabriqué en Hongrie	veicolo prodotto in Ungheria	país de producción del vehículo Hungría
suspension hydro-pneumatique	sospensione idro-pneumatica	susp. hidroneumática
palpeur d'usure intégré	sensore usura integrato	sensor de desgaste incorporado
charge utile surélevée	portata utile maggiorata	carga útil aumentada
ventilé de l'intérieur	autoventilato	ventilación interna

TEXTAR
BRAKE TECHNOLOGY

Due to the diverse range of models and spare parts of automotive manufacturers, it is not always possible to assign the articles precisely. For this reason, please note the remarks and parts description given.

Durch die Modell- und Ersatzteilvielfalt der Automobilhersteller ist eine genaue Zuordnung der Artikel nicht immer möglich. Daher sind die aufgeführten Bemerkungen und Teilebeschreibungen zu beachten.

	GB	D
Japan-made	vehicle made in Japan	Fahrzeugproduktionsland: Japan
L ... mm	length [mm]	Länge [mm]
left	fitting position: left	Einbauseite: links
left hand driven	left-hand drive vehicles	Linkslenker
LHD	left-hand drive vehicles	Linkslenker
lifting axle	lifting axle	Liftachse
light alloy rim	light alloy rim	Leichtmetallfelge
m.W.I.	acoustic wear warning	akustische Verschleißwarnung
man.	manual transmission	Schaltgetriebe
man. adjustm.	manual adjustment	manuelle Nachstellung
max.gross.w. ... kg	gross vehicle weight [kg]	zul. Gesamtgewicht [kg]
mech	mechanical	mechanisch
multi link axle	multilink axle	Multi-link-Achse
not for	not for	nicht für
Ø ... mm	Diameter [mm]	Durchmesser [mm]
on-board comp.	on-board computer	für Fahrzeuge mit Bordcomputer
only with	only with	nur in Verbindung mit
optional	alternatively	wahlweise
or	or	oder
perforated	perforated	gelocht
perforated / vented	perforated / vented	gelocht/innenbel.
pick-up	pick-up	Pick-up
police veh.	police vehicles	Polizeifahrzeuge
post veh.	post office vehicles	Postfahrzeuge
power steering	power steering	Servolenkung
PR ...	PR number	PR-Nummer
RA	fitting position: rear axle	Einbauseite: Hinterachse
reinf. susp.	heavy-duty suspension	verstärktes Fahrwerk
reinf.brakes	reinforced brakes	verstärkte Bremse
RHD	right-hand drive vehicles	Rechtslenker
ride height adjustm.	ride-height adjustment	Niveauregulierung
right	fitting position: right	Einbauseite: rechts
right hand driven	right-hand drive vehicles	Rechtslenker
rim ... hole	rim hole number	Felge Lochzahl
rim size ...	rim size [in]	Felgengröße [Zoll]
round plug	round plug	Rundstecker
Russia-made	vehicle made in Russia	Fahrzeugproduktionsland: Russland
RWD	rear-wheel drive	Heckantrieb
set	set	Satz
single tyre	single tyres	Einfachbereifung
slotted / internally vented	slotted / internally vented	geschlitzt/innenbelüftet
slotted / perforated	slotted / perforated	geschlitzt/gelocht
solid	solid	massiv
solid disc	solid disc	massive Bremsscheibe
spec.purp.veh.	special purpose vehicles	Sondereinsatzfahrzeuge
sport pack.	sports package	Sportpaket
sports susp.	sports suspension	Sportfahrwerk
starr axle	rigid axle	Starrachse
steel rim	steel rim	Stahlfelge
taxi	taxis	Taxifahrzeuge
TH ... mm	thickness [mm]	Dicke [mm]
UK-made	vehicle made in UK	Fahrzeugproduktionsland: Großbritannien
vented	vented	belüftet
vented disc	ventilated disc	belüftete Bremsscheibe
W ... mm	width [mm]	Breite [mm]
W.I.	wear warning contact	Verschleißwarnkontakt
wheel Ø ..."	wheel diameter [in]	Raddurchmesser [Zoll]
XX/YY -	from construction year	ab Baujahr
XXXXX -	from RP number	ab Organisationsnummer
XXXXXX -	from VET number	ab VET-Nummer
XXXXXXX -	from chassis number	ab Fahrgestellnummer

Il n'est pas toujours possible de déterminer exactement un article en raison du grand nombre de modèles et de pièces de rechange proposés par l'industrie automobile.	A causa della grande varietá di modelli e parti di ricambio dei costruttori di automobili, non è sempre possibile identificare esattamente gli articoli. Per questo motivo vanno rispettate le annotazioni e descrizioni delle parti.	A causa de la gran diversidad de modelos y recambios de los fabricantes de automóviles, no siempre es posible determinar exactamente un artículo. Por la tanto, hay que tener en cuenta las observaciones y las descripciones de las piezas.
F	**I**	**E**
véhicule fabriqué au Japon	veicolo prodotto in Giappone	país de producción del vehículo: Japón
longueur [mm]	lunghezza [mm]	longitud [mm]
côté d'assemblage : gauche	lato montaggio: sinistra	lado de montaje: izquierdo
véhicule avec direction à gauche	veicolo con guida a sx	vehic. dirección izquierda
véhicule avec direction à gauche	veicolo con guida a sx	vehic. dirección izquierda
essieu relevable	asse di sollevamento	eje elevable
jante en alliage léger	cerchi in lega leggera	llantas de aleación ligera
avertisseur sonique d'usure	segnalazione acustica usura	avisador acústico de desgaste
boîte de vitesses manuelle	cambio manuale di velocità	caja de cambios manual
réglage manuel	regolazione manuale	reajuste manual
poids total autorisé en charge [kg]	peso complessivo consentito [kg]	peso total autorizado [kg]
mécanique	meccanico	mecánico
essieu multibras	asse multilink	eje multilink
sauf	non per	no para
diamètre [mm]	diametro [mm]	diámetro [mm]
ordinateur de bord	computer di bordo	ordenador de a bordo
uniquement	solo unitamente a	solo en combinación con
au choix	a scelta	opcional
ou	o	o
poinçonné	perforato	perforado
poinçonné/ventilé	perforato / autoventilato	perforado/ventil. int.
pick-up	pick-up	pick-up
voiture de police	mezzi della polizia	vehículo de policía
voiture de la poste	veicoli postali	vehículos de correos
direction assistée	servosterzo	dirección asistida
numéro PR	numero PR	número de PR
montage : essieu AR	lato montaggio: asse posteriore	lado de montaje: eje trasero
châssis renforcé	autotelaio rinforzato	chasis reforzado
frein assisté	freno rinforzato	freno reforzado
véhicule avec direction à droite	veicolo con guida a dx	vehíc. dirección a la derecha
réglage de niveau	regolazione livello	regulación de nivel
côté d'assemblage : droite	lato montaggio: destra	lado de montaje: derecho
véhicule avec direction à droite	veicolo con guida a dx	vehíc. dirección a la derecha
jante, nombre de trous	cerchione, n° fori	llanta, número de taladros
dimension de la jante [pouces]	misura cerchione [pollici]	tamaño de llanta [in]
fiche ronde	spina rotonda	conector redondo
véhicule fabriqué en Russie	veicolo prodotto in Russia	país de producción del vehículo: Rusia
propulsion	trazione posteriore	tracción trasera
jeu	set	juego
pneus simples	pneumatici singoli	neumáticos sencillos
fendu/ventilé de l'intérieur	intagliato /autoventilato	ranurado/vent. interior
fendu/poinçonné	intagliato / Perforato	ranurado/perforado
plein	pieno	macizo
disque de frein plein	disco freno pieno	disco de freno macizo
véhicule spécial	veicoli speciali	para vehículos especiales
équipement sport	pacchetto sportivo	paquete deportivo
châssis sportif	autotelaio sportivo	chasis deportivo
essieu rigide	assale rigido	eje rígido
jante en acier	cerchione in acciaio	llantas de acero
taxis	taxi	taxis
épaisseur [mm]	spessore [mm]	espesor [mm]
véhicule fabriqué au Royaume-Uni	veicolo prodotto in Gran Bretagna	país de producción del vehículo: Gran Bretaña
ventilé	ventilato	ventilado
disque de frein ventilé	freno ventilato	disco de freno ventilado
largeur [mm]	larghezza [mm]	ancho [mm]
contact de signal d'usure	contatto segnalazione usura	contacto avisador de desgaste
diamètre de roue [pouces]	diametro ruota [pollici]	diámetro de rueda [in]
à partir de l'année de construction	dall'anno di costruzione	desde año construcción
à partir du nº d'organisation	dal n° controllo	desde número de organización
à partir du nº de VET	dal n° VET	desde número VET
à partir du nº de châssis	dal n° telaio	desde número de chasis

NOTES ON VAG CHASSIS NUMBERS AND VAG PR NUMBERS /

Erläuterungen zu VAG-Fahrgestell- und VAG-PR-Nummern / Explications concernant les numéros de châssis VAG et les numéros PR-VAG / Spiegazioni relative ai numeri autotelaio VAG e ai numeri VAG–PR / Explicaciones sobre números de bastidor VAG y números PR VAG

VAG CHASSIS NUMBERS: / VAG-Fahrgestellnummern: / Numéros de châssis VAG : / Numeri autotelaio VAG: / Números de bastidor VAG:

VAG vehicles have a 17-figure chassis number embossed:

In den VAG-Fahrzeugen ist eine 17-stellige Fahrgestellnummer eingeschlagen:

Un numéro de châssis de 17 chiffres est poinçonné dans chaque véhicule VAG :

Sui veicoli VAG è impresso un numero a 17 cifre:

Los vehículos del consorcio VAG llevan marcados un número de bastidor de 17 dígitos:

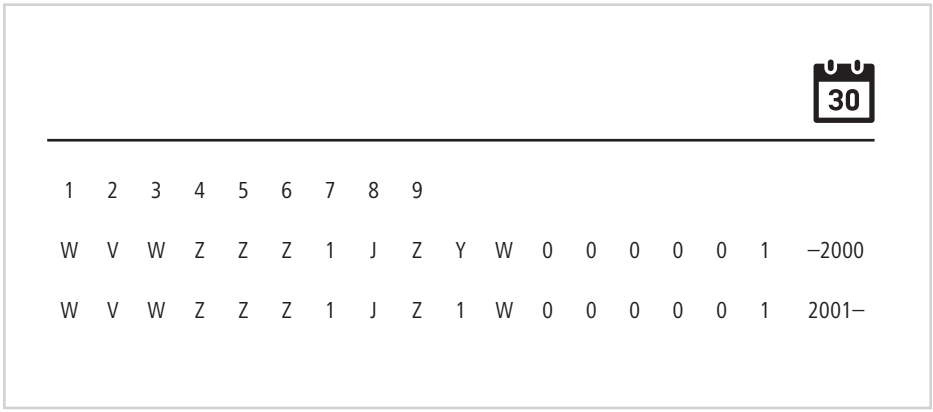

In the spare-parts catalogue this chassis number is abbreviated:

Im Ersatzteilekatalog ist diese Fahrgestellnummer in gekürzter Version aufgeführt:

Dans le catalogue des pièces de rechange, ce numéro de châssis est mentionné sous forme abrégée :

Nel catalogo dei pezzi di ricambio tale numero di autotelaio è esposto in forma abbreviata:

En el catálogo de piezas de repuesto se reproduce este número de bastidor en forma abreviada:

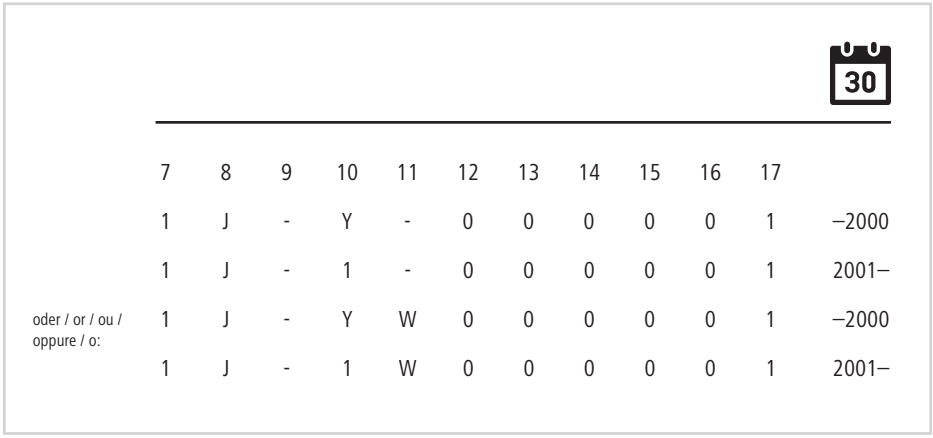

Only details of the last 11 positions of the complete chassis number are included. The first 6 positions and the 9th do not have any significance in spare-part specifications. The 11th position (factory) is included if necessary.

Es werden nur Angaben zu den letzten 11 Stellen der vollständigen Fahrgestellnummer aufgeführt. Die ersten 6 Stellen und die 9. Stelle haben für die Bestimmung von Ersatzteilen keine Bedeutung. Falls erforderlich, wird die 11. Stelle (herstellendes Werk) mit aufgeführt.

Seules les données concernant les 11 derniers chiffres du numéro de châssis complet sont mentionées. Les 6 premiers chiffres, ainsi que le 9e chiffre, n'ont pas d'importance quant à la détermination des pièces de rechange. En cas de nécessité, le 11e chiffre (usine de fabrication) sera mentionné.

Vengono indicati solo i dati relativi alle ultime 11 posizioni del codice di autotelaio completo. Le prime 6 posizioni e la 9° posizione non sono rilevanti per la definizione ed individuazione dei pezzi di ricambio. Se necessario viene indicata anche la posizione n° 11 (codice indicante il costruttore).

Sólo se indican los últimos 11 dígitos del número de bastidor completo. Los primeros 6 dígitos y el dígito número 9 no tienen ningún significado para determinar una pieza de repuesto. En caso necesario se indica también el dígito número 11 (planta de fabricación).

PR NUMBERS /
PR-Nummern / Numéros PR / Numeri PR / Números PR

On VAG vehicles, some spare parts can only be classified by using PR numbers (primary equipment). See example.

Die Ersatzteilzuordnung bei VAG-Fahrzeugen ist teilweise nur noch mithilfe sogenannter PR-Nummern (Primäraustattung) möglich (siehe Beispiel).

Dans certains cas, la détermination des pièces détachées des véhicules VAG n'est plus possible sans l'aide des numéros dits PR (équipement primaire) ; voir exemple ci-dessous :

In alcuni casi, nei veicoli VAG è possibile individuare i pezzi di ricambio soltanto con l'ausilio di cosiddetti numeri PR (da "Primärausstattung" = "equipaggiamento primario") (vedere esempio).

La asignación de piezas de repuesto en vehículos del consorcio VAG sólo es posible en parte con la ayuda de los así llamados números PR (equipamiento primario) (véase el ejemplo).

EXAMPLE / Beispiel / Exemple / Esempio / Ejemplo

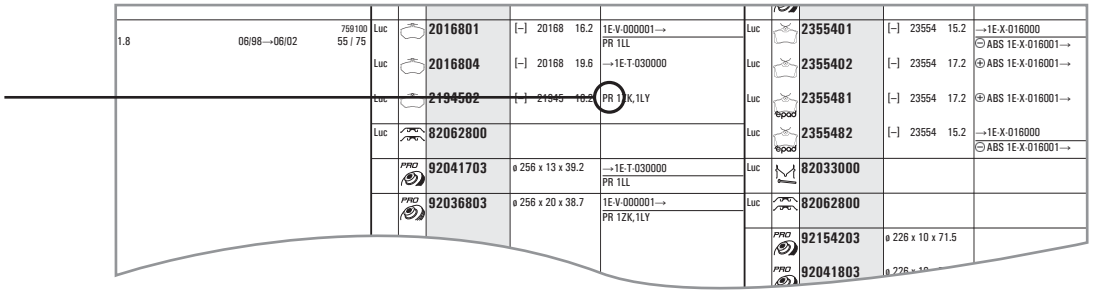

The PR numbers are listed on the vehicle data stickers. These can be found in the vehicle service handbook (see example) and on the actual vehicle, usually in the boot/trunk.

Die PR-Nummern sind auf den Fahrzeugdatenaufklebern aufgeführt. Diese befinden sich im Fahrzeug-Serviceheft (siehe Beispiel) und am Fahrzeug selbst, überwiegend im Kofferraum.

Les numéros PR sont mentionnés sur les étiquettes d'information des véhicules. Celles-ci se trouvent dans le carnet d'entretien du véhicule (voir exemple). Elles sont également appliquées sur le véhicule proprement dit, en général dans le coffre.

Tali numeri PR sono indicati sugli adesivi contenenti i dati della vettura. Essi si trovano nel manuale di servizio del veicolo (vedere esempio) e su quest'ultimo, solitamente su una parete interna del cofano.

Los números PR aparecen en las fichas adhesivas con los datos del vehículo. Éstas se encuentran en el cuaderno de servicio del vehículo (véase el ejemplo) y en el vehículo mismo preponderantemente en el maletero.

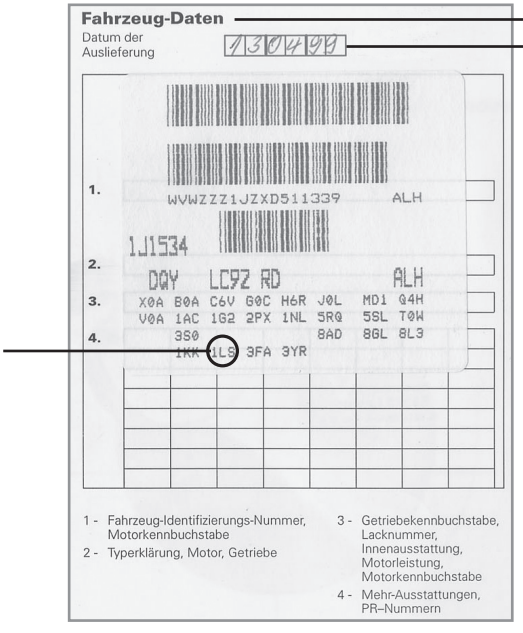

Vehicle data
Date of delivery

1 Vehicle ID number, Engine code letter
2 Type definition, engine, gearbox
3 Gearbox code letter Colour number Interior trim Performance Engine code letter
4 Multiple interior trim PR numbers

GM CHASSIS NUMBERS / GM-Fahrgestellnummern / Numéros de châssis de GM Numeri autotelaio GM / Números de bastidor GM

GM vehicles have a chassis number embossed on the VIN plate or on a plate which is visible through the windscreen.
Only details of positions 10–17 of the complete chassis number are included in this catalogue.

In den GM-Fahrzeugen ist eine Fahrzeugidentifikationsnummer eingeschlagen.
Im Ersatzteilkatalog werden hiervon nur die Stellen 10–17 verwandt.

Pour les voitures GM, le numéro de châssis est poinçonné dans le véhicule.
Seules les données concernant les chiffres 10–17 du numéro de châssis complet sont mentionnées.

Sui veicoli GM è impresso un numero di autotelaio.
Vengono indicati solo i dati relativi alle ultime posizioni 10–17 del codice di autotelaio completo.

Los vehículos del consorcio GM llevan marcados un número de bastidor.
Sólo se indican los últimos dígitos 10–17 del número de bastidor completo.

Digit 10 = Year built / Baujahr / Année de constr. / Anno di costr. / Año constr.

Digit 11 = Factory / Herstellendes Werk / Usine de fabrication / Stabilimento di produzione / Planta de fabricación

Digits 12–17 = Chassis number / Fahrgestellnummer / Numéro châssis / Numero di autotelaio / Número de bastidor

EXAMPLE / Beispiel / Exemple / Esempio / Ejemplo

Opel: Agila / Astra / Meriva / Signum / Speedster / Vectra / Zafira
Vauxhall: Agila / Astra / Meriva / Roadster / Signum / Vectra / Zafira

1	2	3	4	5	6	**7**	**8**	**9**	10	11
WOL	0									
		X	C	E75	3	**4**	**000001**	**Y**	474	XXKZ

6	Digit / Stelle / Chiffre / Cifra / Dígito 10	Year built / Baujahr / Année de constr. / Anno di costr. / Año constr. W = 1998 / X = 1999 / Y = 2000 / 1 = 2001 / 2 = 2002 / 3 = 2003/ 4 = 2004 / 5 = 2005 / 6 = 2006 / 7 = 2007 etc.
7	Digit / Stelle / Chiffre / Cifra / Dígito 11	Factory / Herstellendes Werk / Usine de fabrication / Stabilimento di produzione / Planta de fabricación 1 = Rüsselsheim, 2 = Bochum, 4 = Zaragoza, 5 = Antwerpen, 6 = Eisenach, 8 = Ellesmere Port, B = Bertone, E = Heuliez, G = Gliwice, H = Rayong, V = Luton, Y = Barcelona
8	Digit / Stelle / Chiffre / Cifra / Dígito 12–17	Chassis number / Fahrgestellnummer / Numéro châssis / Numero di Autotelaio / Número de Bastidor

EXAMPLE / Beispiel / Exemple / Esempio / Ejemplo

Opel: Vivaro
Vauxhall: Vivaro

1	2	3	4	5	6	7	**8**	**9**	**10**
WOL	L								
		F	7	A	C	B	**C**	**B**	**000001**

8	Digit / Stelle / Chiffre / Cifra / Dígito 10	Year built / Baujahr / Année de constr. / Anno di costr. / Año constr. 1 = model year 2001 / 2 = model year 2002 / 3 = model year 2003 etc.
9	Digit / Stelle / Chiffre / Cifra / Dígito 11	Factory / Herstellendes Werk / Usine de fabrication / Stabilimento di produzione / Planta de fabricación V = Luton / Y = Barcelona
10	Digit / Stelle / Chiffre / Cifra / Dígito 12–17	Chassis number / Fahrgestellnummer / Numéro châssis / Numero di autotelaio / Número de bastidor

ORGA (DAM) NUMBERS /
Orga-(DAM)-Nummern / Numéros Orga (DAM) / Numeri Orga (DAM) / Números Orga (DAM)

In some cases, spare parts classification for Peugeot and Citroën vehicles is now only possible with the help of so-called Orga numbers (organisation number, DAM No.) (see example).

Die Ersatzteilzuordnung bei Peugeot- und Citroën-Fahrzeugen ist teilweise nur noch mithilfe sogenannter Orga-Nummern (Organisationsnummer, DAM-Nr.) möglich (siehe Beispiel).

Dans certains cas pour les véhicules Peugeot et Citroën, l'affectation définitive ne se fait pas avec le n° de série mais avec la nomenclature Orga (numéro organisation, N° DAM) ; voir l'exemple ci-dessous :

Nel caso di veicoli Peugeot e Citroën, l'assegnazione dei pezzi di ricambio è in parte ancora possibile solo con l'ausilio dei cosiddetti numeri Orga (numero d'organizzazione, n° DAM) (vedere l'esempio).

La asignación de piezas de recambio en turismos de Peugeot y Citroën, en parte sólo es posible con ayuda de los números Orga (DAM) – (véase el ejemplo)

EXAMPLE / Beispiel / Exemple / Esempio / Ejemplo

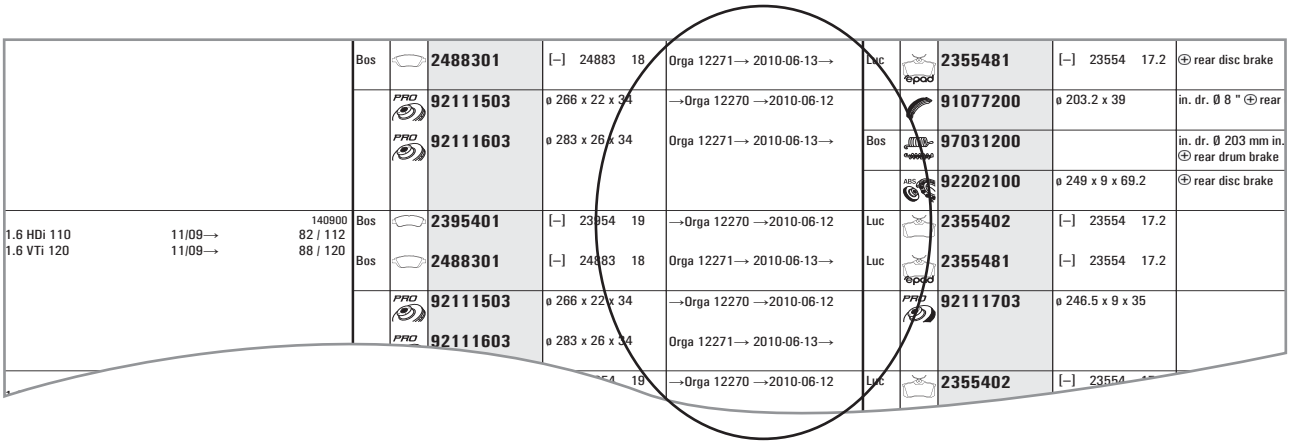

			Bos		2488301	[–] 24883 18	Orga 12271→ 2010-06-13→	Luc		2355481	[–] 23554 17.2	⊕ rear disc brake
				PRO	92111503	ø 266 x 22 x 34	→Orga 12270 →2010-06-12			91077200	ø 203.2 x 39	in. dr. Ø 8 " ⊕ rear
				PRO	92111603	ø 283 x 26 x 34	Orga 12271→ 2010-06-13→	Bos		97031200		in. dr. Ø 203 mm in. ⊕ rear drum brake
									ABS	92202100	ø 249 x 9 x 69.2	⊕ rear disc brake
1.6 HDi 110 1.6 VTi 120	11/09→ 11/09→	140900 82 / 112 88 / 120	Bos		2395401	[–] 23954 19	→Orga 12270 →2010-06-12	Luc		2355402	[–] 23554 17.2	
			Bos		2488301	[–] 24883 18	Orga 12271→ 2010-06-13→	Luc		2355481	[–] 23554 17.2	
				PRO	92111503	ø 266 x 22 x 34	→Orga 12270 →2010-06-12		PRO	92111703	ø 246.5 x 9 x 35	
				PRO	92111603	ø 283 x 26 x 34	Orga 12271→ 2010-06-13→					
						19	→Orga 12270 →2010-06-12	Luc		2355402	[–] 23554	

The Orga numbers are listed on the vehicle data labels. In the majority of vehicles, these are on the A or B column or the door on the driver's side. In some models, the label can also be on the front bulkhead of the engine bay or on the cover of the fuse box. The number can also be found sprayed in yellow or silver or stamped on one of the two suspension struts or in the right-hand wheel housing.

Die Orga-Nummern sind auf den Fahrzeugdatenaufklebern aufgeführt. Diese befinden sich bei den meisten Fahrzeugen auf der Fahrerseite an der A- oder B-Säule oder auf der Tür. Bei einigen Modellen kann sich der Aufkleber auch auf der Stirnwand des Motorraums oder auf dem Deckel des Sicherungskastens befinden. Des Weiteren kann sich die Nummer auch an einem der beiden Federbeinholme oder im rechten Radhaus in gelber oder silberner Schrift aufgesprüht bzw. eingeschlagen befinden.

Les numéros Orga figurent sur les autocollants portant les caractéristiques des véhicules. Pour la majorité des véhicules, ceux-ci sont placés sur la porte côté conducteur. Pour certains modèles, l'autocollant peut se trouver aussi sur le tablier avant du compartiment moteur ou encore sur le couvercle de la boîte à fusibles. En outre, le numéro peut également se trouver sur l'un des deux éléments de suspension ou dans le passage de roue droit, soit inscrit au pochoir en jaune ou argenté, soit frappé.

I numeri Orga sono riportati sulle targhette dati del veicolo. Nella maggior parte dei veicoli sono affisse sul lato conducente, sul montante anteriore o su quello centrale oppure sulla portiera. In alcuni modelli la targhetta adesiva può anche essere sul lato anteriore del vano motore oppure sul coperchietto della scatola dei fusibili. Il numero può inoltre essere su una delle due sospensioni telescopiche oppure nel passaruota di destra, con scrittura a caratteri gialli o argento spruzzati o impressi.

Los números Orga están escritos en las pegatinas de datos de vehículos. En la mayoría de los vehículos estas pegatinas se encuentran en los montantes A o B o en la puerta en el lado del conductor. En algunos modelos también se encuentran en el compartimento del motor o en la tapa de la caja de fusibles. También es posible encontrar el número en el tubo portarruedas aplicado en letra amarilla o en color plata.

ORGA (DAM) NUMBERS /
Orga-(DAM)-Nummern / Numéros Orga (DAM) / Numeri Orga (DAM) / Números Orga (DAM)

EXAMPLE / Beispiel / Exemple / Esempio / Ejemplo

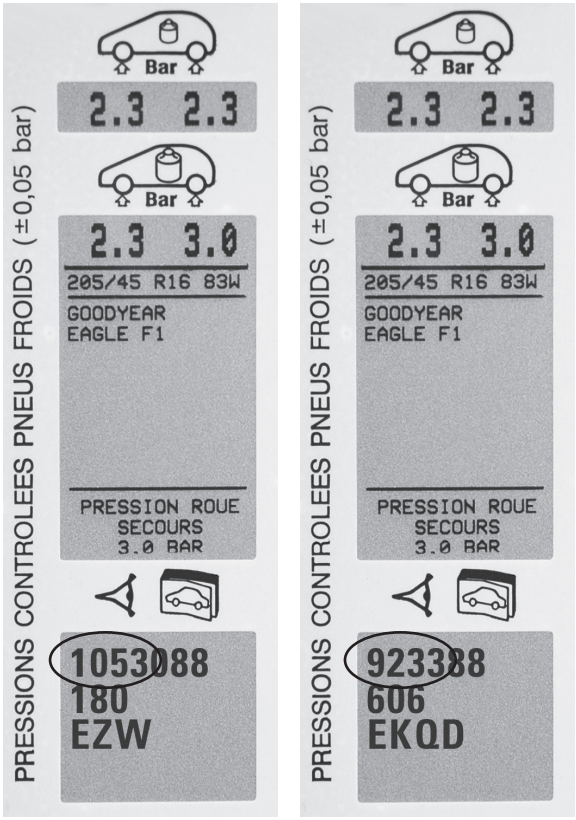

The Orga number is in the bottom half of the vehicle data label. The last two digits of the number are irrelevant as far as looking for the spare part is concerned.

Auf dem Fahrzeugdatenaufkleber ist die Orga-Nummer im unteren Teil zu finden. Die letzten beiden Stellen der Nummer sind für die Ersatzteilsuche nicht von Bedeutung.

Le numéro Orga est inscrit au bas de l'autocollant portant les caractéristiques des véhicules. Les deux derniers chiffres du numéro ne jouent aucun rôle pour la recherche des pièces de rechange.

Il numero Orga è riportato sulla parte inferiore della targhetta adesiva con i dati del veicolo. Le ultime due cifre del numero non sono rilevanti ai fini della ricerca del pezzo di ricambio.

El número Orga se encuentra en la parte inferior de la pegatina de datos de vehículos. Las dos últimas cifras del número no son relevantes para la búsqueda de piezas de recambio.

PRODUCT GROUP Produktgruppe Groupe de produits Categoria di prodotto Grupo de productos	**PART NUMBER** Artikelnummer Référence Numero di articolo Referencia
	**20**XXXXX, **21**XXXXX, **23**XXXXX, **24**XXXXX, **25**XXXXX, **29**XXXXX
	**20**XXX**8**X, **21**XXX**8**X, **23**XXX**8**X, **24**XXX**8**X, **25**XXX**8**X
	**10**XXXXX, **11**XXXXX, **12**XXXXX, **13**XXXXX
	**92**XXXXXX, **93**XXXXXX
	**92**XXXX**03**, **92**XXXX**05**
	**91**XXXXXX
	**83**XXXXXX
	**84**XXXXXX
	**94**XXXXXX
	**98**XXXXXX
	**82**XXXXXX
	**97**XXXXXX
	**95**XXXXXX
	**96000100**
	**81000400**

AC 1
ACURA 1
AIXAM 2
ALFA ROMEO 2
ALPINA 17
ASIA MOTORS 18
ASTON MARTIN 18
AUDI 19
BENTLEY 78
BERTONE 79
BMW 79
BMW (BRILLIANCE) 224
BUGATTI 224
BUICK 224
BYD 225
CADILLAC 225
CADILLAC (SGM) 227
CARBODIES 227
CHERY 227
CHEVROLET 227
CHEVROLET (SGM) 243
CHRYSLER 243
CITROËN 250
DACIA 305
DAEWOO 309
DAIHATSU 316
DAIMLER 321
DALLAS 322
DODGE 322
DR 326
EUNOS 326
FENGXING (DONGFENG) 327
FIAT 327
FIAT (NANJING) 373
FORD 374
FORD (CHANGAN) 411
FORD ASIA / OZEANIA 411
FORD AUSTRALIA 412
FORD USA 426
FSO 430
GEELY 431
GMC 431
GREAT WALL 431
HAFEI 431
HOLDEN 431
HONDA 444
HONDA (GAC) 460
HSV 461
HUMMER 462
HYUNDAI 462
HYUNDAI (BEIJING) 485
HYUNDAI (HUATAI) 485
INFINITI 486
INOKOM 490
ISUZU 490
IVECO 492
JAGUAR 503
JEEP 508
KIA 511
LADA 526
LANCIA 529
LAND ROVER 538
LDV 547
LEXUS 548
LIGIER 552
LINCOLN 552
LOTUS 553
LTI 553
MARCOS 553
MARUTI 554
MARUTI SUZUKI 554
MASERATI 554
MAXUS (SAIC MOTOR) 554
MAYBACH 554
MAZDA 555
MEGA 571
MERCEDES-BENZ 571
MERCURY 703
METROCAB 704
MG 704
MINI 707
MITSUBISHI 715
MORGAN 740
MULTICAR 741
NAZA 742
NISSAN 742
NISSAN (DONGFENG) 770
OPEL 771
PERODUA 832
PEUGEOT 832
PIAGGIO 918
PLYMOUTH 919
PONTIAC 919
PORSCHE 921
PREMIER 932
PROTON 932
PUCH 935
RENAULT 937
RENAULT SAMSUNG 995
RENAULT TRUCKS 995
ROLLS-ROYCE 996
ROVER 997
SAAB 1003
SANTANA 1013
SEAT 1013
SKODA 1045
SMART 1070
SSANGYONG 1072
SUBARU 1075
SUZUKI 1091
TATA (TELCO) 1102
TOYOTA 1102
TOYOTA (FAW) 1146
TOYOTA (GAC) 1146
TROLLER 1146
TVR 1146
VAUXHALL 1146
VOLKSWAGEN 1196
VOLKSWAGEN (SVW) 1284
VOLVO 1285
VOLVO (CHANGAN) 1299
WIESMANN 1299
ZASTAVA 1300
ZAZ 1300

AC

AC

kW / hp												
ACE 10/98→												
100												
4.6 10/98→ 240 / 326	Ate		2135803	[–] 21358 19.8	→10/99		Luc		2098101	[–] 20981 13.7	→10/99	
4.9 10/98→ 179 / 243	Ate		82062900		→10/99		Luc		82031900		→10/99	
4.9 Super Charger 10/98→ 239 / 325							Luc		82062800		→10/99	
ACECA 10/98→												
200												
4.6 10/98→ 240 / 326	Ate		2135803	[–] 21358 19.8	→10/99		Luc		2098101	[–] 20981 13.7	→10/99	
4.9 10/98→ 179 / 243	Ate		82062900		→10/99		Luc		82031900		→10/99	
4.9 Super Charger 10/98→ 239 / 325			92075400	ø 278 x 24 x 47			Luc		82062800		→10/99	
								PRO	92063603	ø 253 x 20 x 43.7		
COBRA Mk IV (291N) 09/97→08/99												
300												
4.9 Roadster 09/97→08/99 168 / 228	Ate		2135803	[–] 21358 19.8			Luc		2098101	[–] 20981 13.7		
	Ate		82062900				Luc		82031900			
			92075400	ø 278 x 24 x 47			Luc		82062800			
								PRO	92063603	ø 253 x 20 x 43.7		
400												
4.9 Super Charger 10/97→ 239 / 325	Ate		2135803	[–] 21358 19.8	→08/99		Luc		2098101	[–] 20981 13.7	→08/99	
	Ate		82062900		→08/99		Luc		82031900		→08/99	
			92075400	ø 278 x 24 x 47			Luc		82062800		→08/99	
								PRO	92063603	ø 253 x 20 x 43.7		

ACURA

ACURA

kW / hp												
INTEGRA Coupe 09/93→09/01												
500												
1.8 GS-R 10/93→09/01 147 / 200	Ake		2356601	[+] 23566 17.2			Ake		2173801	[+] 21738 13		
1.8 SiR 09/93→08/01 132 / 180												
1.8 Sport 10/93→09/01 125 / 170												
LEGEND III 08/96→												
600												
3.5 08/96→ 151 / 205	Ake		2165101	[+] 21651 17.3			Ake		2171901	[+] 21719 14.6		
			92101000	ø 282 x 23 x 47.1	→12/98		Ake		82049600			
			92110200	ø 300 x 28 x 47.2	01/99→		Ake		82063000			
MDX (YD1) 08/00→12/05												
700												
3.5 All-wheel Drive 08/00→12/05 193 / 262	Nis		2342001	[+] 23420 16.5								
3.5 All-wheel Drive 03/01→12/05 179 / 243												
3.5 All-wheel Drive 08/05→12/05 186 / 253												
NSX 08/97→												
800												
3.2 08/97→ 206 / 280	Ake		2165101	[+] 21651 17.3			Ake		2335501	[+] 23355 15		
RDX 04/06→												
900												
2.3 Turbo All-wheel Drive 04/06→ 176 / 239	Ake		2434201	[+] 24342 17.8			Ake		2365201	[+] 23652 14.8		
		PRO	92184803	ø 293 x 28 x 47.1					91072200	ø 198 x 35		
SLX 11/95→09/99												
1000												
3.2 4WD 11/95→09/99 140 / 190	Ake		2184501	[+] 21845 16.5			Sum		2187503	[+] 21875 15.8		
3.5 4WD 11/97→09/99 151 / 205			92091400	ø 280 x 26 x 36			Sum		82033800			
									92091600	ø 313 x 18 x 80		
TL (UC_) 08/05→12/08												
1100												
3.2 08/05→12/08 190 / 258	Nis		2372901	[+] 23729 17			Ake		2365201	[+] 23652 14.8		
TSX (CL_) 10/05→12/08												
1200												
2.0 Vtec 10/05→12/08 152 / 207	Nis		2372901	[+] 23729 17								

AIXAM

AIXAM

		kW / hp												
400 01/00→08/02														
0.05	01/00→	1300 4 / 5	Ate		**2473001**	[+] 24730 10.2								
0.4	06/00→08/02	1400 4 / 5	Ate		**2473401**	[+] 24734 10.2								
500 12/97→03/04														
0.5 D	12/97→03/04	1500 10 / 14	Ate		**2473001**	[+] 24730 10.2								
A.721 01/05→														
0.4 D	01/05→	1600 4 / 5	Ate		**2473001**	[+] 24730 10.2	VLGK44VBRA3104479→							
			Ate		**2473401**	[+] 24734 10.2	→VLGK44VBRA3104478							
A.741 01/05→														
0.4 D	01/05→	1700 4 / 5	Ate		**2473001**	[+] 24730 10.2	VLGK44VBRA3104479→							
			Ate		**2473401**	[+] 24734 10.2	→VLGK44VBRA3104478							
A.751 01/05→03/10														
0.5	07/05→03/10	1800 15 / 20	Ate		**2473401**	[+] 24734 10.2								
0.5 D	01/05→	1900 10 / 14	Ate		**2473001**	[+] 24730 10.2	VLGK44VBRA3104479→							
			Ate		**2473401**	[+] 24734 10.2	→VLGK44VBRA3104478							

ALFA ROMEO

ALFA ROMEO

		kW / hp												
145 (930) 07/94→01/01														
1.4 i.e. 16V T.S. 1.6 i.e. 16V T.S.	12/96→01/01 12/96→01/01	2000 76 / 103 88 / 120	Luc		**2083302**	[+] 20833 17.1	Lucas →12/96	Luc		**2317703**	[–] 23177 14.4	⊕ rear disc brake		
			Ate		**2192901**	[+] 21929 17.9	Teves 01/97→	Luc		**82037300**				
			Ate		**2193201**	[+] 21932 17.9	Teves →12/96	Luc		**82062800**				
			Ate		**82032000**		Teves	Ben		**91037000**	ø 228.6 x 42	⊕ rear drum brake		
			Luc		**82062800**		Lucas →12/96	Ben		**97006700**		⊕ rear drum brake		
			Ate		**82062900**		Teves	Ben		**83037004**	bore ø 17.5 ø 228.6 x 42	⊕ rear drum brake		
				PRO	**92068503**	ø 257 x 20 x 40.5		Ben		**84038600**	bore ø 22.2 ø 203.2 x 39	⊕ rear drum brake		
									PRO	**92061103**	ø 240 x 11 x 40	⊕ rear disc brake		
										94014000	ø 228,3 x 48	⊕ rear drum brake →12/96		
										94019900	ø 203,2 x 48.5	⊕ rear drum brake 01/97→		
1.6 16V T.S.	09/97→12/00	2100 82 / 112	Ate		**2192901**	[+] 21929 17.9		Luc		**2317703**	[–] 23177 14.4	⊕ rear disc brake		
			Ate		**82032000**		Teves	Luc		**82037300**				
			Ate		**82062900**		Teves	Luc		**82062800**				
				PRO	**92068503**	ø 257 x 20 x 40.5		Ben		**91037000**	ø 228.6 x 42	⊕ rear drum brake		
								Ben		**97006700**		⊕ rear drum brake		
								Ben		**83037004**	bore ø 17.5 ø 228.6 x 42	⊕ rear drum brake		
									PRO	**92061103**	ø 240 x 11 x 40	⊕ rear disc brake		
										94019900	ø 203,2 x 48.5	⊕ rear drum brake		
1.8 i.e. 16V	03/98→01/01	2200 106 / 144	Ate		**2322201**	[+] 23222 19	01/00→	Luc		**2317703**	[–] 23177 14.4	⊕ rear disc brake		
			Ate		**2328902**	[+] 23289 19	Teves →12/99	Luc		**82037300**				
			Ate		**82032000**		Teves	Luc		**82062800**				
			Ate		**82062900**		Teves		PRO	**92061103**	ø 240 x 11 x 40	⊕ rear disc brake		
				PRO	**92055203**	ø 284 x 22 x 39.4								
1.9 D	07/94→02/99	2300 68 / 92	Luc		**2083302**	[+] 20833 17.1	Lucas →12/96	Luc		**2317703**	[–] 23177 14.4	⊕ rear disc brake		

→

		kW / hp											
145 (930) 07/94→01/01													
1.9 D	07/94→02/99	2300 68 / 92	Ate		**2192901**	[+] 21929 17.9	Teves 01/97→	Luc		**82037300**		
			Ate		**2193201**	[+] 21932 17.9	Teves →12/96	Luc		**82062800**		
			Ate		**82032000**		Teves	Ben		**91037000**	ø 228.6 x 42	⊕ rear drum brake
			Luc		**82062800**		Lucas →12/96	Ben		**97006700**		⊕ rear drum brake
			Ate		**82062900**		Teves		PRO	**92061103**	ø 240 x 11 x 40	⊕ rear disc brake
				PRO	**92041503**	ø 257 x 12 x 40.5	→12/96			**94014000**	ø 228,3 x 48	⊕ rear drum brake →12/96
				PRO	**92068503**	ø 257 x 20 x 40.5	01/97→			**94019900**	ø 203,2 x 48.5	⊕ rear drum brake 01/97→
1.9 JTD	02/99→01/01	2400 77 / 105	Ate		**2192701**	[+] 21927 17.9		Luc		**2317703**	[–] 23177 14.4	⊕ rear disc brake
			Ate		**82032000**		Teves	Luc		**82037300**		⊕ rear disc brake
			Ate		**82062900**		Teves	Luc		**82062800**		⊕ rear disc brake
				PRO	**92068503**	ø 257 x 20 x 40.5		Ben		**91046500**	ø 203.2 x 39	⊕ rear drum brake
								Ben		**84038600**	bore ø 22.2 ø 203.2 x 39	⊕ rear drum brake
									PRO	**92061103**	ø 240 x 11 x 40	⊕ rear disc brake
										94019900	ø 203,2 x 48.5	⊕ rear drum brake
1.9 TD	10/94→02/99	2500 66 / 90	Luc		**2083302**	[+] 20833 17.1	Lucas →12/96	Luc		**2317703**	[–] 23177 14.4	⊕ rear disc brake
			Ate		**2192901**	[+] 21929 17.9	Teves 01/97→	Luc		**82037300**		
			Ate		**2193201**	[+] 21932 17.9	Teves →12/96	Luc		**82062800**		
			Ate		**82032000**		Teves	Ben		**91037000**	ø 228.6 x 42	⊕ rear drum brake
			Luc		**82062800**		Lucas →12/96	Ben		**97006700**		⊕ rear drum brake
			Ate		**82062900**		Teves	Ben		**84038600**	bore ø 22.2 ø 203.2 x 39	⊕ rear drum brake
				PRO	**92041503**	ø 257 x 12 x 40.5	→12/96		PRO	**92061103**	ø 240 x 11 x 40	⊕ rear disc brake
				PRO	**92068503**	ø 257 x 20 x 40.5	01/97→			**94014000**	ø 228,3 x 48	⊕ rear drum brake →12/96
										94019900	ø 203,2 x 48.5	⊕ rear drum brake 01/97→
2.0 16V Quadrifoglio	03/98→01/01	2600 114 / 155	Ate		**2322201**	[+] 23222 19	01/00→	Luc		**2317703**	[–] 23177 14.4	
			Ate		**2328902**	[+] 23289 19	→12/99	Luc		**82037300**		
			Ate		**82032000**		Teves	Luc		**82062800**		
			Ate		**82062900**		Teves		PRO	**92061103**	ø 240 x 11 x 40	
				PRO	**92055203**	ø 284 x 22 x 39.4						
2.0 16V T.S.	10/95→01/01	2700 110 / 150	Ate		**2192901**	[+] 21929 17.9	→12/96	Luc		**2317703**	[–] 23177 14.4	
			Ate		**2322201**	[+] 23222 19	01/00→	Luc		**82037300**		
			Ate		**2328902**	[+] 23289 19	01/97→ →12/99	Luc		**82062800**		
			Ate		**82032000**		Teves		PRO	**92061103**	ø 240 x 11 x 40	
			Luc		**82062800**		Lucas →12/96					
			Ate		**82062900**		Teves					
				PRO	**92055203**	ø 284 x 22 x 39.4						
146 (930) 12/94→01/01													
1.4 i.e. 16V T.S. 1.6 i.e. 16V T.S.	11/96→01/01 11/96→01/01	2800 76 / 103 88 / 120	Luc		**2083302**	[+] 20833 17.1	Lucas →12/96	Luc		**2317703**	[–] 23177 14.4	⊕ rear disc brake
			Ate		**2192901**	[+] 21929 17.9	Teves 01/97→	Luc		**82037300**		
			Ate		**2193201**	[+] 21932 17.9	Teves →12/96	Luc		**82062800**		
			Ate		**82032000**		Teves	Ben		**91037000**	ø 228.6 x 42	⊕ rear drum brake

ALFA ROMEO

ALFA ROMEO

		kW / hp										
146 (930) 12/94→01/01												
		2800	Luc		**82062800**		Lucas →12/96	Ben		**97006700**		⊕ rear drum brake
1.4 i.e. 16V T.S.	11/96→01/01	76 / 103										
1.6 i.e. 16V T.S.	11/96→01/01	88 / 120	Ate		**82062900**		Teves	Ben		**83037004**	bore ø 17.5 ø 228.6 x 42	⊕ rear drum brake
				PRO	**92068503**	ø 257 x 20 x 40.5		Ben		**84038600**	bore ø 22.2 ø 203.2 x 39	⊕ rear drum brake
									PRO	**92061103**	ø 240 x 11 x 40	⊕ rear disc brake
										94014000	ø 228,3 x 48	⊕ rear drum brake →12/96
										94019900	ø 203,2 x 48.5	⊕ rear drum brake 01/97→
		2900	Ate		**2192901**	[+] 21929 17.9		Luc		**2317703**	[–] 23177 14.4	⊕ rear disc brake
1.6 16V T.S.	09/97→12/00	82 / 112										
			Ate		**82032000**		Teves	Luc		**82037300**		
			Ate		**82062900**		Teves	Luc		**82062800**		
				PRO	**92068503**	ø 257 x 20 x 40.5		Ben		**91037000**	ø 228.6 x 42	⊕ rear drum brake
								Ben		**97006700**		⊕ rear drum brake
								Ben		**83037004**	bore ø 17.5 ø 228.6 x 42	⊕ rear drum brake
									PRO	**92061103**	ø 240 x 11 x 40	⊕ rear disc brake
										94019900	ø 203,2 x 48.5	⊕ rear drum brake
		3000	Luc		**2083302**	[+] 20833 17.1	Lucas →12/96	Luc		**2317703**	[–] 23177 14.4	⊕ rear disc brake
1.8 i.e. 16V T.S.	11/96→01/01	103 / 140										
			Ate		**2193201**	[+] 21932 17.9	Teves →12/96	Luc		**82037300**		
			Ate		**2322201**	[+] 23222 19	01/00→	Luc		**82062800**		
			Ate		**2328902**	[+] 23289 19	Teves 01/97→ →12/99	Ben		**91037000**	ø 228.6 x 42	⊕ rear drum brake
			Ate		**82032000**		Teves	Ben		**97006700**		⊕ rear drum brake
			Luc		**82062800**		Lucas →12/96		PRO	**92061103**	ø 240 x 11 x 40	⊕ rear disc brake
			Ate		**82062900**		Teves			**94014000**	ø 228,3 x 48	⊕ rear drum brake →12/96
				PRO	**92055203**	ø 284 x 22 x 39.4	01/97→					
				PRO	**92068503**	ø 257 x 20 x 40.5	→12/96					
		3100	Ate		**2322201**	[+] 23222 19	01/00→	Luc		**2317703**	[–] 23177 14.4	⊕ rear disc brake
1.8 i.e. 16V T.S.	03/98→01/01	106 / 144										
			Ate		**2328902**	[+] 23289 19	Teves →12/99	Luc		**82037300**		
			Ate		**82032000**		Teves	Luc		**82062800**		
			Ate		**82062900**		Teves		PRO	**92061103**	ø 240 x 11 x 40	⊕ rear disc brake
				PRO	**92055203**	ø 284 x 22 x 39.4						
		3200	Ate		**2192701**	[+] 21927 17.9		Luc		**2317703**	[–] 23177 14.4	⊕ rear disc brake
1.9 JTD	02/99→01/01	77 / 105										
			Ate		**82032000**		Teves	Luc		**82037300**		⊕ rear disc brake
			Ate		**82062900**		Teves	Luc		**82062800**		⊕ rear disc brake
				PRO	**92068503**	ø 257 x 20 x 40.5		Ben		**91046500**	ø 203.2 x 39	⊕ rear drum brake
								Ben		**84038600**	bore ø 22.2 ø 203.2 x 39	⊕ rear drum brake
									PRO	**92061103**	ø 240 x 11 x 40	⊕ rear disc brake
										94019900	ø 203,2 x 48.5	⊕ rear drum brake
		3300	Luc		**2083302**	[+] 20833 17.1	Lucas →12/96	Luc		**2317703**	[–] 23177 14.4	⊕ rear disc brake
1.9 TD	12/94→02/99	66 / 90										
			Ate		**2192901**	[+] 21929 17.9	Teves 01/97→	Luc		**82037300**		
			Ate		**2193201**	[+] 21932 17.9	Teves →12/96	Luc		**82062800**		
			Ate		**82032000**		Teves	Ben		**91037000**	ø 228.6 x 42	⊕ rear drum brake
			Luc		**82062800**		Lucas →12/96	Ben		**97006700**		⊕ rear drum brake

→

		kW / hp										
146 (930) 12/94→01/01												
1.9 TD	12/94→02/99	3300 66 / 90	Ate	82062900		Teves	Ben	84037001	bore ø 20.6 ø 228.6 x 42	⊕ rear drum brake
			PRO	92041503	ø 257 x 12 x 40.5	→12/96	PRO	92061103	ø 240 x 11 x 40	⊕ rear disc brake
			PRO	92068503	ø 257 x 20 x 40.5	01/97→		94014000	ø 228,3 x 48	⊕ rear drum brake →12/96
								94019900	ø 203,2 x 48.5	⊕ rear drum brake 01/97→
2.0 16V Quadrifoglio	03/98→01/01	3400 114 / 155	Ate	2322201	[+] 23222 19	01/00→	Luc	2317703	[–] 23177 14.4	
			Ate	2328902	[+] 23289 19	→12/99	Luc	82037300		
			Ate	82032000		Teves	Luc	82062800		
			Ate	82062900		Teves	PRO	92061103	ø 240 x 11 x 40	
			PRO	92055203	ø 284 x 22 x 39.4					
2.0 16V T.S.	10/95→01/01	3500 110 / 150	Ate	2192901	[+] 21929 17.9	→12/96	Luc	2317703	[–] 23177 14.4	⊕ rear disc brake
			Ate	2322201	[+] 23222 19	01/00→	Luc	82037300		
			Ate	2328902	[+] 23289 19	01/97→ →12/99	Luc	82062800		
			Ate	82032000		Teves	PRO	92061103	ø 240 x 11 x 40	⊕ rear disc brake
			Luc	82062800		Lucas →12/96				
			Ate	82062900		Teves				
			PRO	92055203	ø 284 x 22 x 39.4					
147 (937) 11/00→03/10												
1.6 16V T.SPARK (937AXB1A)	01/01→03/10	3600 88 / 120	Ate	2322201	[+] 23222 19	⊕ classic line	Luc	2351703	[–] 23517 16.5	⊕ classic line
2.0 16V T.SPARK (937AXC1_)	01/01→03/10	110 / 150	Ate	82032000			Luc	82060100		
			Ate	82062900			Luc	82063300		
				92096400	ø 281 x 15 x 44.7	→3021489	PRO	92046903	ø 251 x 10 x 50.5	
				92046800	ø 284 x 22 x 43.5	3021490→				
			PRO	92046803	ø 284 x 22 x 43.5	3021490→				
1.6 16V T.SPARK ECO (937AXA1A)	01/01→03/10	3700 77 / 105	Ate	2314101	[+] 23141 19.3	→3021489	Luc	2351703	[–] 23517 16.5	⊕ classic line
			Ate	2322201	[+] 23222 19		Luc	82060100		
			Ate	82032000			Luc	82063300		
			Ate	82062900			PRO	92046903	ø 251 x 10 x 50.5	
				92096400	ø 281 x 15 x 44.7	→3021489				
				92046800	ø 284 x 22 x 43.5	3021490→				
			PRO	92046803	ø 284 x 22 x 43.5	3021490→				
1.9 JTD	11/00→09/04	3800 81 / 110	Ate	2322201	[+] 23222 19	⊕ classic line	Luc	2351703	[–] 23517 16.5	⊕ classic line
1.9 JTD (937AXD1A)	04/01→03/10	85 / 115	Ate	2328902	[+] 23289 19		Luc	82060100		
			Ate	82032000			Luc	82063300		
			Ate	82062900			PRO	92046903	ø 251 x 10 x 50.5	
				92046800	ø 284 x 22 x 43.5					
			PRO	92046803	ø 284 x 22 x 43.5					
1.9 JTD	06/03→03/10	3900 74 / 101	Ate	2322201	[+] 23222 19	⊕ classic line	Luc	2351703	[–] 23517 16.5	⊕ classic line
1.9 JTD 16V	11/02→03/10	103 / 140								
1.9 JTD 16V	09/03→09/04	93 / 126	Ate	82032000			Luc	82060100		
1.9 JTD 16V	10/04→03/10	100 / 136								
1.9 JTDM	10/04→03/10	85 / 115	Ate	82062900			Luc	82063300		
1.9 JTDM 16V	09/04→03/10	110 / 150								
1.9 JTDM 16V	06/08→03/10	125 / 170								
1.9 JTDM 8V	07/05→03/10	88 / 120		92046800	ø 284 x 22 x 43.5		PRO	92046903	ø 251 x 10 x 50.5	
2.0	07/02→05/05	121 / 165								

ALFA ROMEO

ALFA ROMEO

		kW / hp											
147 (937) 11/00→03/10													
		3900											
1.9 JTD	06/03→03/10	74 / 101		PRO	92046803	ø 284 x 22 x 43.5							
1.9 JTD 16V	11/02→03/10	103 / 140											
1.9 JTD 16V	09/03→09/04	93 / 126											
1.9 JTD 16V	10/04→03/10	100 / 136											
1.9 JTDM	10/04→03/10	85 / 115											
1.9 JTDM 16V	09/04→03/10	110 / 150											
1.9 JTDM 16V	06/08→03/10	125 / 170											
1.9 JTDM 8V	07/05→03/10	88 / 120											
2.0	07/02→05/05	121 / 165											
		4000	Bre		2138103	[+] 21381 18		Luc		2351703	[–] 23517 16.5	⊕ classic line	
3.2 GTA	02/03→03/10	184 / 250	Bre		2427301	[+] 24273 16		Luc		82060100			
			Bre		82061600			Luc		82063300			
					92119600	ø 330 x 32 x 44.7			PRO	92046903	ø 251 x 10 x 50.5		
156 (932) 09/97→09/05													
		4100	Ate		2314002	[+] 23140 19.3	→02/00	Luc		2160601	[–] 21606 16.6	→12/01	
1.6 16V T.SPARK	09/97→09/05	82 / 112	Ate		2314101	[+] 23141 19.3	03/00→ →VET 383456	Luc		2351703	[–] 23517 16.5	01/02→ ⊕ classic line	
			Ate		2322201	[+] 23222 19	VET 383456→ ⊕ classic line	Luc		82060100			
			Ate		82032000			Luc		82063300			
			Ate		82062900					92114700	ø 276 x 10 x 45.7	01/02→	
					92096400	ø 281 x 15 x 44.7	→VET 383456		PRO	92046903	ø 251 x 10 x 50.5	→12/01	
					92046800	ø 284 x 22 x 43.5	VET 383456→						
				PRO	92046803	ø 284 x 22 x 43.5	VET 383456→						
		4200	Ate		2314002	[+] 23140 19.3	→02/00	Luc		2160601	[–] 21606 16.6	→12/01	
1.6 16V T.SPARK (932A4)	09/97→09/05	88 / 120	Ate		2314101	[+] 23141 19.3	03/00→ →VET 383456	Luc		2351703	[–] 23517 16.5	01/02→	
			Ate		2328902	[+] 23289 19	VET 383456→	Luc		82060100			
			Ate		82032000			Luc		82063300			
			Ate		82062900					92114700	ø 276 x 10 x 45.7	01/02→	
					92096400	ø 281 x 15 x 44.7	→VET 383456		PRO	92046903	ø 251 x 10 x 50.5	→12/01	
					92046800	ø 284 x 22 x 43.5	VET 383456→						
				PRO	92046803	ø 284 x 22 x 43.5	VET 383456→						
		4300	Ate		2314002	[+] 23140 19.3	→02/00	Luc		2160601	[–] 21606 16.6		
1.8 16V T.SPARK (932A3)	09/97→10/00	106 / 144	Ate		2314101	[+] 23141 19.3	03/00→ →VET 383456	Luc		82060100			
			Ate		2328902	[+] 23289 19	VET 383456→	Luc		82063300			
			Ate		82032000				PRO	92046903	ø 251 x 10 x 50.5		
			Ate		82062900								
					92096400	ø 281 x 15 x 44.7	→VET 383456						
					92046800	ø 284 x 22 x 43.5	VET 383456→						
				PRO	92046803	ø 284 x 22 x 43.5	VET 383456→						
		4400	Ate		2314101	[+] 23141 19.3	→VET 383456	Luc		2160601	[–] 21606 16.6	→12/01	
1.8 16V T.SPARK (932A31__)	10/00→09/05	103 / 140											
1.9 JTD (932A2B, 932A2C)	05/01→09/05	85 / 115	Ate		2328902	[+] 23289 19	VET 383456→	Luc		2351703	[–] 23517 16.5	01/02→	
			Ate		82032000			Luc		82060100			
			Ate		82062900			Luc		82063300			
					92096400	ø 281 x 15 x 44.7	→VET 383456			92114700	ø 276 x 10 x 45.7	01/02→	
					92046800	ø 284 x 22 x 43.5	VET 383456→		PRO	92046903	ø 251 x 10 x 50.5	→12/01	
				PRO	92046803	ø 284 x 22 x 43.5	VET 383456→						

→

		kW / hp											
156 (932) 09/97→09/05													
		4500	Ate		2314101	[+] 23141 19.3	→VET 383456	Luc		2160601	[–] 21606 16.6	
1.9 JTD	11/02→11/04	100 / 136										
1.9 JTD	11/03→09/05	93 / 126	Ate		2328902	[+] 23289 19	VET 383456→	Luc		82060100		
1.9 JTD	07/04→09/05	110 / 150										
1.9 JTD (932A2B__)	10/00→05/01	81 / 110	Ate		82032000			Luc		82063300		
			Ate		82062900				PRO	92046903	ø 251 x 10 x 50.5	
					92096400	ø 281 x 15 x 44.7	→VET 383456					
					92046800	ø 284 x 22 x 43.5	VET 383456→					
				PRO	92046803	ø 284 x 22 x 43.5	VET 383456→					
		4600	Ate		2314002	[+] 23140 19.3		Luc		2160601	[–] 21606 16.6	
1.9 JTD (932B2)	09/97→10/00	77 / 105										
			Ate		82032000			Luc		82060100		
			Ate		82062900			Luc		82063300		
					92096400	ø 281 x 15 x 44.7			PRO	92046903	ø 251 x 10 x 50.5	
		4700	Ate		2314101	[+] 23141 19.3	→VET 383456	Luc		2351703	[–] 23517 16.5	
1.9 JTD 16V	11/02→09/05	103 / 140										
			Ate		2328902	[+] 23289 19	VET 383456→	Luc		82060100		
			Ate		82032000			Luc		82063300		
			Ate		82062900					92114700	ø 276 x 10 x 45.7	
					92096400	ø 281 x 15 x 44.7	→VET 383456					
					92046800	ø 284 x 22 x 43.5	VET 383456→					
				PRO	92046803	ø 284 x 22 x 43.5	VET 383456→					
		4800	Ate		2328902	[+] 23289 19		Luc		2160601	[–] 21606 16.6	
2.0 16V T.SPARK (932A2)	09/97→10/00	114 / 155										
2.0 Twin Spark	11/97→04/00	118 / 160	Ate		82032000			Luc		82060100		
2.4 JTD (932B1)	09/97→09/03	100 / 136										
2.5 V6 24V (932A1)	09/97→12/01	140 / 190	Ate		82062900			Luc		82063300		
					92046800	ø 284 x 22 x 43.5			PRO	92046903	ø 251 x 10 x 50.5	
				PRO	92046803	ø 284 x 22 x 43.5						
		4900	Ate		2328902	[+] 23289 19		Luc		2160601	[–] 21606 16.6	→12/01
2.0 16V T.SPARK (932A21__)	10/00→03/02	110 / 150										
2.4 JTD (932A1B__)	10/00→09/05	103 / 140	Ate		82032000			Luc		2351703	[–] 23517 16.5	01/02→
2.5 V6 24V (932A11_)	10/00→09/05	141 / 192	Ate		82062900			Luc		82060100		
					92046800	ø 284 x 22 x 43.5		Luc		82063300		
				PRO	92046803	ø 284 x 22 x 43.5				92114700	ø 276 x 10 x 45.7	01/02→
									PRO	92046903	ø 251 x 10 x 50.5	→12/01
		5000	Ate		2328902	[+] 23289 19		Luc		2351703	[–] 23517 16.5	
2.0 JTS (932AXA)	03/02→09/05	122 / 166										
2.4 JTD	06/03→09/05	120 / 163	Ate		82032000			Luc		82060100		
2.4 JTD	10/03→09/05	129 / 175										
2.4 JTD (932AXC)	03/02→09/05	110 / 150	Ate		82062900			Luc		82063300		
					92046800	ø 284 x 22 x 43.5				92114700	ø 276 x 10 x 45.7	
				PRO	92046803	ø 284 x 22 x 43.5						
		5100	Bre		2138103	[+] 21381 18		Luc		2351703	[–] 23517 16.5	
3.2 GTA (932AXB)	03/02→09/05	184 / 250										
			Bre		82061600			Luc		82060100		
					92119600	ø 330 x 32 x 44.7	0588973→	Luc		82063300		
										92114700	ø 276 x 10 x 45.7	
156 Sportwagon (932) 01/00→05/06													
		5200	Ate		2314002	[+] 23140 19.3	→02/00	Luc		2160601	[–] 21606 16.6	→12/01
1.6 16V T.SPARK	01/00→09/05	82 / 112										

ALFA ROMEO

ALFA ROMEO

156 Sportwagen (932) 01/00→05/06

		kW / hp											
1.6 16V T.SPARK	01/00→09/05	5200 82 / 112	Ate	2314101	[+] 23141 19.3	03/00→ →VET 383456	Luc	2351703	[–] 23517 16.5	01/02→ ⊕ classic line
			Ate	2322201	[+] 23222 19	VET 383456→ ⊕ classic line	Luc	82060100		
			Ate	82032000			Luc	82063300		
			Ate	82062900				92114700	ø 276 x 10 x 45.7	01/02→
				92096400	ø 281 x 15 x 44.7	→VET 383456		PRO 92046903	ø 251 x 10 x 50.5	→12/01
				92046800	ø 284 x 22 x 43.5	VET 383456→				
				PRO 92046803	ø 284 x 22 x 43.5	VET 383456→				
1.6 16V T.SPARK. (932A4)	05/00→05/06	5300 88 / 120	Ate	2314101	[+] 23141 19.3	→VET 383456	Luc	2160601	[–] 21606 16.6	→12/01
1.8 16V T.SPARK (932B31__)	10/00→05/06	103 / 140	Ate	2328902	[+] 23289 19	VET 383456→	Luc	2351703	[–] 23517 16.5	01/02→
1.9 JTD (932B2B, 932B2C)	05/01→05/06	85 / 115	Ate	82032000			Luc	82060100		
			Ate	82062900			Luc	82063300		
				92096400	ø 281 x 15 x 44.7	→VET 383456		92114700	ø 276 x 10 x 45.7	01/02→
				92046800	ø 284 x 22 x 43.5	VET 383456→		PRO 92046903	ø 251 x 10 x 50.5	→12/01
				PRO 92046803	ø 284 x 22 x 43.5	VET 383456→				
1.8 16V T.SPARK (932A3)	05/00→10/00	5400 106 / 144	Ate	2314101	[+] 23141 19.3	→VET 383456	Luc	2160601	[–] 21606 16.6	
1.9 JTD (932B2B__)	10/00→05/01	81 / 110	Ate	2328902	[+] 23289 19	VET 383456→	Luc	82060100		
			Ate	82032000			Luc	82063300		
			Ate	82062900				PRO 92046903	ø 251 x 10 x 50.5	
				92096400	ø 281 x 15 x 44.7	→VET 383456				
				92046800	ø 284 x 22 x 43.5	VET 383456→				
				PRO 92046803	ø 284 x 22 x 43.5	VET 383456→				
1.9 JTD	11/02→11/04	5500 100 / 136	Ate	2314101	[+] 23141 19.3	→VET 383456	Luc	2351703	[–] 23517 16.5	
1.9 JTD	11/03→05/06	93 / 126	Ate	2328902	[+] 23289 19	VET 383456→	Luc	82060100		
1.9 JTD 16V	11/02→05/06	103 / 140	Ate	82032000			Luc	82063300		
			Ate	82062900				92114700	ø 276 x 10 x 45.7	
				92096400	ø 281 x 15 x 44.7	→VET 383456				
				92046800	ø 284 x 22 x 43.5	VET 383456→				
				PRO 92046803	ø 284 x 22 x 43.5	VET 383456→				
1.9 JTD	03/05→05/06	5600 110 / 150	Bre	2309201	[+] 23092 16	⊕ sports susp.	Luc	2351703	[–] 23517 16.5	
			Ate	2328902	[+] 23289 19	⊖ sports susp.	Luc	82060100		
			Bre	82505800		⊕ sports susp.	Luc	82063300		
			Ate	82032000				92114700	ø 276 x 10 x 45.7	
			Ate	82062900						
				92046800	ø 284 x 22 x 43.5					
				PRO 92046803	ø 284 x 22 x 43.5					
1.9 JTD (932B2)	05/00→10/00	5700 77 / 105	Ate	2314002	[+] 23140 19.3		Luc	2160601	[–] 21606 16.6	
			Ate	82032000			Luc	82060100		
			Ate	82062900			Luc	82063300		
				92096400	ø 281 x 15 x 44.7			PRO 92046903	ø 251 x 10 x 50.5	
1.9 JTD 16V Q4	07/04→05/06	5800 110 / 150	Bre	2309201	[+] 23092 16	⊕ sports susp.	Luc	2351703	[–] 23517 16.5	

→

156 Sportwagon (932) 01/00→05/06

		kW / hp										
1.9 JTD 16V Q4	07/04→05/06	5800 110 / 150	Ate	2328902	[+] 23289 19	⊖ sports susp.	Luc	82060100		
			Bre	82505800		⊕ sports susp.	Luc	82063300		
			Ate	82032000				92114700	ø 276 x 10 x 45.7	
			Ate	82062900						
				92046800	ø 284 x 22 x 43.5	⊖ sports susp.				
				92119600	ø 330 x 32 x 44.7	⊕ sports susp.				
				PRO 92046803	ø 284 x 22 x 43.5	⊖ sports susp.				
2.0	03/02→05/06	5900 119 / 162	Ate	2328902	[+] 23289 19		Luc	2351703	[–] 23517 16.5	
2.0 JTS (932BXA)	03/02→05/06	122 / 166								
2.4 JTD	06/03→05/06	120 / 163	Ate	82032000			Luc	82060100		
2.4 JTD	10/03→05/06	129 / 175	Ate	82062900			Luc	82063300		
2.4 JTD (932BXC)	03/02→05/06	110 / 150		92046800	ø 284 x 22 x 43.5			92114700	ø 276 x 10 x 45.7	
				PRO 92046803	ø 284 x 22 x 43.5					
2.0 16V T.SPARK (932A2)	05/00→06/02	6000 114 / 155	Ate	2328902	[+] 23289 19		Luc	2160601	[–] 21606 16.6	
2.4 JTD (932B1)	05/00→09/03	100 / 136	Ate	82032000			Luc	82060100		
2.5 V6 24V (932A1)	05/00→08/03	140 / 190	Ate	82062900			Luc	82063300		
				92046800	ø 284 x 22 x 43.5			92114700	ø 276 x 10 x 45.7	
				PRO 92046803	ø 284 x 22 x 43.5			PRO 92046903	ø 251 x 10 x 50.5	
2.0 16V T.SPARK (932B21__)	10/00→03/02	6100 110 / 150	Ate	2328902	[+] 23289 19		Luc	2160601	[–] 21606 16.6	→12/01
2.4 JTD (932B1B__)	10/00→05/06	103 / 140	Ate	82032000			Luc	2351703	[–] 23517 16.5	01/02→
2.5 V6 24V (932B11_)	10/00→05/06	141 / 192	Ate	82062900			Luc	82060100		
				92046800	ø 284 x 22 x 43.5		Luc	82063300		
				PRO 92046803	ø 284 x 22 x 43.5			92114700	ø 276 x 10 x 45.7	
								PRO 92046903	ø 251 x 10 x 50.5	→12/01
3.2 GTA (932BXB)	03/02→05/06	6200 184 / 250	Bre	2138103	[+] 21381 18		Luc	2351703	[–] 23517 16.5	
			Bre	82061600			Luc	82060100		
				92119600	ø 330 x 32 x 44.7	0588973→	Luc	82063300		
								92114700	ø 276 x 10 x 45.7	

159 (939) 09/05→11/11

1.8 MPI	03/07→11/11	6300 103 / 140	Bre	2375701	[+] 23757 16	⊕ sport pack.	Luc	2376002	[–] 23760 17.8	
			Ate	2433901	[+] 24339 20.5	→12/07 ⊖ sport pack.	Luc	82509000		⊖ sport pack.
			Bre	2485201	[+] 24852 15.8	⊖ sport pack.		PRO 92145203	ø 278 x 12 x 43.2	→7026205 ⊖ sport pack.
			Bre	82505800		⊖ sport pack.		PRO 92221003	ø 278 x 12 x 43.2	7026206→ ⊖ sport pack. ⊕ sport pack.
			Ate	82030500		→12/07 ⊖ sport pack.				
				PRO 92145003	ø 305 x 28 x 39.7	→7026205 ⊖ sport pack.				
				PRO 92220803	ø 305 x 28 x 39.7	7026206→ ⊖ sport pack.				
				PRO 92220903	ø 330 x 28 x 39.7	⊕ sport pack.				
1.8 TBi	05/09→11/11	6400 147 / 200	Bre	2375701	[+] 23757 16		Luc	2376001	[–] 23760 17.8	
			Bre	82505800			Luc	82054900		
				92145100	ø 330 x 28 x 39.7	→7026205 ⊖ sport pack.	Luc	82063300		
				PRO 92145103	ø 330 x 28 x 39.7	→7026205 ⊖ sport pack.		PRO 92145303	ø 292 x 22 x 43.2	→7026205 ⊖ sport pack.

ALFA ROMEO

ALFA ROMEO

		kW / hp										
159 (939) 09/05→11/11												
		6400		92220903	ø 330 x 28 x 39.7	7026206→ ⊖ sport pack. ⊕ sport pack.		92221103	ø 292 x 22 x 43.2	7026206→ ⊖ sport pack. ⊕ sport pack.
1.8 TBi	05/09→11/11	147 / 200								
		6500	Bre	2375701	[+] 23757 16	⊕ sport pack.	Luc	2376002	[–] 23760 17.8	
1.9 JTDM 16V	09/05→11/11	100 / 136								
1.9 JTDM 16V	09/05→11/11	110 / 150	Ate	2433901	[+] 24339 20.5	→12/07 ⊖ sport pack.	Luc	82509000		⊖ sport pack.
1.9 JTDM 8V	09/05→11/11	85 / 115								
1.9 JTDM 8V	09/05→11/11	88 / 120								
2.2 JTS	09/05→11/11	136 / 185	Bre	2485201	[+] 24852 15.8	⊖ sport pack.	Luc	82063300		
			Bre	82505800		⊖ sport pack.		92145203	ø 278 x 12 x 43.2	→7026205 ⊖ sport pack.
			Ate	82030500		→12/07 ⊖ sport pack.		92221003	ø 278 x 12 x 43.2	7026206→ ⊖ sport pack. ⊕ sport pack.
				92145003	ø 305 x 28 x 39.7	→7026205 ⊖ sport pack.				
				92220803	ø 305 x 28 x 39.7	7026206→ ⊖ sport pack.				
				92220903	ø 330 x 28 x 39.7	⊕ sport pack.				
		6600	Bre	2375701	[+] 23757 16	⊕ sport pack.	Luc	2376002	[–] 23760 17.8	
1.9 JTS	09/05→11/11	118 / 160								
			Ate	2433901	[+] 24339 20.5	⊖ sport pack.	Luc	82509000		⊖ sport pack.
			Ate	82030500		⊖ sport pack.	Luc	82063300		
				92145003	ø 305 x 28 x 39.7	→7026205 ⊖ sport pack.		92145203	ø 278 x 12 x 43.2	→7026205 ⊖ sport pack.
				92220803	ø 305 x 28 x 39.7	7026206→ ⊖ sport pack.		92221003	ø 278 x 12 x 43.2	7026206→ ⊖ sport pack. ⊕ sport pack.
				92220903	ø 330 x 28 x 39.7	⊕ sport pack.				
		6700	Bre	2375701	[+] 23757 16	⊕ sport pack.	Luc	2376002	[–] 23760 17.8	
2.0 JTDM	05/09→11/11	120 / 163								
2.0 JTDM	06/10→11/11	100 / 136	Bre	2485201	[+] 24852 15.8	⊖ sport pack.	Luc	82509000		⊖ sport pack.
			Bre	82505800				92221003	ø 278 x 12 x 43.2	
				92220803	ø 305 x 28 x 39.7	⊖ sport pack.				
				92220903	ø 330 x 28 x 39.7	⊕ sport pack.				
		6800	Bre	2375701	[+] 23757 16	⊕ sport pack.	Luc	2376002	[–] 23760 17.8	
2.0 JTDM	05/09→11/11	125 / 170								
			Bre	2485201	[+] 24852 15.8	⊖ sport pack.	Luc	82509000		⊖ sport pack.
			Bre	82505800				92145203	ø 278 x 12 x 43.2	→7026205 ⊖ sport pack.
				92145003	ø 305 x 28 x 39.7	→7026205 ⊖ sport pack.		92221003	ø 278 x 12 x 43.2	7026206→ ⊖ sport pack. ⊕ sport pack.
				92220803	ø 305 x 28 x 39.7	7026206→ ⊖ sport pack.				
				92220903	ø 330 x 28 x 39.7	⊕ sport pack.				
		6900	Ate	2433901	[+] 24339 20.5		Luc	2376002	[–] 23760 17.8	
2.2 Q4	09/06→12/07	136 / 185								
			Ate	82076900				92145203	ø 278 x 12 x 43.2	→7026206
				92145003	ø 305 x 28 x 39.7	→7026206		92221003	ø 278 x 12 x 43.2	7026206→
				92220803	ø 305 x 28 x 39.7	7026206→				
		7000	Bre	2309201	[+] 23092 16	→12/07 ⊖ sport pack.	Luc	2376001	[–] 23760 17.8	
2.4 JTDM	09/05→11/11	147 / 200								
2.4 JTDM	05/07→11/11	154 / 210	Bre	2375701	[+] 23757 16	01/08→ ⊖ sport pack. ⊕ sport pack.	Luc	82054900		
2.4 JTDM Q4	05/07→11/11	154 / 210								
			Bre	82505800			Luc	82063300		
				92145100	ø 330 x 28 x 39.7	→7026205 ⊖ sport pack.		92145303	ø 292 x 22 x 43.2	→7026205 ⊖ sport pack.
				92145103	ø 330 x 28 x 39.7	→7026205 ⊖ sport pack.		92221103	ø 292 x 22 x 43.2	7026206→ ⊖ sport pack. ⊕ sport pack.
				92220903	ø 330 x 28 x 39.7	7026206→ ⊖ sport pack. ⊕ sport pack.				
		7100	Bre	2309201	[+] 23092 16	→7115379 ⊖ sport pack.	Luc	2376001	[–] 23760 17.8	
3.2 JTS	02/08→11/11	191 / 260								
3.2 JTS Q4	12/05→11/11	191 / 260	Bre	2375701	[+] 23757 16	7115380→ ⊖ sport pack. ⊕ sport pack.	Luc	82054900		
			Bre	82505800			Luc	82063300		
				92145100	ø 330 x 28 x 39.7	→7026205 ⊖ sport pack.		92145303	ø 292 x 22 x 43.2	→7026205 ⊖ sport pack.

→

			kW / hp											
159 (939) 09/05→11/11														
		7100												
3.2 JTS	02/08→11/11	191 / 260		PRO	92145103	ø 330 x 28 x 39.7	→7026205 ⊖ sport pack.		PRO	92221103	ø 292 x 22 x 43.2	7026206→ ⊖ sport pack. ⊕ sport pack.
3.2 JTS Q4	12/05→11/11	191 / 260		PRO	92220903	ø 330 x 28 x 39.7	7026206→ ⊖ sport pack. ⊕ sport pack.					
159 Saloon (939) 09/05→11/11 → 159 (939), Page 9														
159 Sportwagon (939) 03/06→11/11														
		7200		Bre	2375701	[+] 23757 16	⊕ sport pack.		Luc	2376002	[–] 23760 17.8	
1.8 MPI	03/07→11/11	103 / 140										
1.9 JTDM 16V	03/06→11/11	100 / 136		Ate	2433901	[+] 24339 20.5	→12/07 ⊖ sport pack.		Luc	82509000		⊖ sport pack.
1.9 JTDM 16V	03/06→11/11	110 / 150										
1.9 JTDM 8V	03/06→11/11	88 / 120										
1.9 JTS	03/06→11/11	118 / 160		Bre	2485201	[+] 24852 15.8	⊖ sport pack.		Luc	82063300		
2.2 JTS	03/06→11/11	136 / 185										
				Bre	82505800				PRO	92145203	ø 278 x 12 x 43.2	→7026205 ⊖ sport pack.
				Ate	82030500		→12/07 ⊖ sport pack.		PRO	92221003	ø 278 x 12 x 43.2	7026206→ ⊖ sport pack. ⊕ sport pack.
					PRO 92145003	ø 305 x 28 x 39.7	→7026205 ⊖ sport pack.					
					PRO 92220803	ø 305 x 28 x 39.7	7026206→ ⊖ sport pack.					
					PRO 92220903	ø 330 x 28 x 39.7	⊕ sport pack.					
		7300		Bre	2375701	[+] 23757 16			Luc	2376001	[–] 23760 17.8	
1.8 TBi	05/09→11/11	147 / 200										
				Bre	82505800				Luc	82054900		
					92145100	ø 330 x 28 x 39.7	→7026205 ⊖ sport pack.		Luc	82063300		
					PRO 92145103	ø 330 x 28 x 39.7	→7026205 ⊖ sport pack.		PRO	92145303	ø 292 x 22 x 43.2	→7026205 ⊖ sport pack.
					PRO 92220903	ø 330 x 28 x 39.7	7026206→ ⊖ sport pack. ⊕ sport pack.		PRO	92221103	ø 292 x 22 x 43.2	7026206→ ⊖ sport pack. ⊕ sport pack.
		7400		Bre	2375701	[+] 23757 16	⊕ sport pack.		Luc	2376002	[–] 23760 17.8	
1.9 JTDM 8V	03/06→11/11	85 / 115										
				Ate	2433901	[+] 24339 20.5	⊖ sport pack.		Luc	82509000		⊖ sport pack.
				Ate	82030500		⊖ sport pack.		Luc	82063300		
					PRO 92145003	ø 305 x 28 x 39.7	→7026205 ⊖ sport pack.		PRO	92145203	ø 278 x 12 x 43.2	→7026205 ⊖ sport pack.
					PRO 92220803	ø 305 x 28 x 39.7	7026206→ ⊖ sport pack.		PRO	92221003	ø 278 x 12 x 43.2	7026206→ ⊖ sport pack. ⊕ sport pack.
					PRO 92220903	ø 330 x 28 x 39.7	⊕ sport pack.					
		7500		Bre	2375701	[+] 23757 16	⊕ sport pack.		Luc	2376002	[–] 23760 17.8	
2.0 JTDM	05/09→11/11	120 / 163										
2.0 JTDM	06/10→11/11	100 / 136		Bre	2485201	[+] 24852 15.8	⊖ sport pack.		Luc	82509000		
				Bre	82505800		⊖ sport pack.		PRO	92221003	ø 278 x 12 x 43.2	
					PRO 92220803	ø 305 x 28 x 39.7	⊖ sport pack.					
					PRO 92220903	ø 330 x 28 x 39.7	⊕ sport pack.					
		7600		Bre	2375701	[+] 23757 16	⊕ sport pack.		Luc	2376002	[–] 23760 17.8	
2.0 JTDM	05/09→11/11	125 / 170										
				Bre	2485201	[+] 24852 15.8	⊖ sport pack.		Luc	82509000		⊖ sport pack.
				Bre	82505800		⊖ sport pack.		PRO	92145203	ø 278 x 12 x 43.2	→7026205 ⊖ sport pack.
					PRO 92145003	ø 305 x 28 x 39.7	→7026205 ⊖ sport pack.		PRO	92221003	ø 278 x 12 x 43.2	7026206→ ⊖ sport pack. ⊕ sport pack.
					PRO 92220803	ø 305 x 28 x 39.7	7026206→ ⊖ sport pack.					
					PRO 92220903	ø 330 x 28 x 39.7	⊕ sport pack.					
		7700		Bre	2309201	[+] 23092 16	→12/07 ⊖ sport pack.		Luc	2376001	[–] 23760 17.8	
2.4 JTDM	03/06→11/11	147 / 200										
2.4 JTDM	05/07→11/11	154 / 210		Bre	2375701	[+] 23757 16	01/08→ ⊖ sport pack. ⊕ sport pack.		Luc	82054900		
2.4 JTDM Q4	05/07→11/11	154 / 210										
3.2 JTS Q4	03/06→11/11	191 / 260		Bre	82505800				Luc	82063300		
					92145100	ø 330 x 28 x 39.7	→7026205 ⊖ sport pack.		PRO	92145303	ø 292 x 22 x 43.2	→7026205 ⊖ sport pack.
					PRO 92145103	ø 330 x 28 x 39.7	→7026205 ⊖ sport pack.		PRO	92221103	ø 292 x 22 x 43.2	7026206→ ⊖ sport pack. ⊕ sport pack.
					PRO 92220903	ø 330 x 28 x 39.7	7026206→ ⊖ sport pack. ⊕ sport pack.					
		7800		Bre	2309201	[+] 23092 16	→7115379 ⊖ sport pack.		Luc	2376001	[–] 23760 17.8	
3.2 JTS	02/08→11/11	191 / 260										

ALFA ROMEO

ALFA ROMEO

		kW / hp										
159 Sportwagon (939) 03/06→11/11												
		7800	Bre		2375701	[+] 23757 16	7115380→ ⊖ sport pack. ⊕ sport pack.	Luc		82054900		
3.2 JTS	02/08→11/11	191 / 260	Bre		82505800			Luc		82063300		
					92145100	ø 330 x 28 x 39.7	→7026205 ⊖ sport pack.		PRO	92145303	ø 292 x 22 x 43.2	→7026205 ⊖ sport pack.
				PRO	92145103	ø 330 x 28 x 39.7	→7026205 ⊖ sport pack.		PRO	92221103	ø 292 x 22 x 43.2	7026206→ ⊖ sport pack. ⊕ sport pack.
				PRO	92220903	ø 330 x 28 x 39.7	7026206→ ⊖ sport pack. ⊕ sport pack.					
159 Stufenheck (939) 09/05→11/11 → 159 (939), Page 9												
166 (936) 09/98→06/07												
		7900	Ate		2163702	[+] 21637 19		Luc		2160601	[–] 21606 16.6	
2.0 T.Spark (936A3A__)	09/98→10/00	114 / 155										
2.0 T.Spark (936A3B__)	10/00→06/07	110 / 150										
2.4 JTD	04/02→06/07	110 / 150	Ate		82032000			Luc		82060100		
2.4 JTD	10/03→06/07	120 / 163										
2.4 JTD (936A2A__)	09/98→10/00	100 / 136	Ate		82062900			Luc		82063300		
2.4 JTD (936A2B__)	10/00→06/07	103 / 140										
					92093900	ø 281 x 26 x 47.5				92095300	ø 276 x 10 x 51.7	
		8000	Bre		2309201	[+] 23092 16		Luc		2160601	[–] 21606 16.6	
2.0 V6 (936A3___)	09/98→10/00	151 / 205										
2.4 JTD	10/03→06/07	129 / 175										
2.4 JTD	07/05→06/07	136 / 185	Bre		82505800			Luc		82060100		
2.4 JTD	07/06→06/07	132 / 180										
2.5 V6 24V (936A2___)	09/98→10/00	140 / 190										
2.5 V6 24V (936A21__)	10/00→06/07	138 / 188			92097500	ø 310 x 28 x 47.3		Luc		82063300		
3.0 V6 24V (936A1___)	09/98→10/00	166 / 226										
3.0 V6 24V (936A11__)	10/00→06/07	162 / 220										
3.2 V6 24V	10/03→06/07	176 / 240								92095300	ø 276 x 10 x 51.7	
166 Saloon (936) 09/98→06/07 → 166 (936), Page 12												
166 Stufenheck (936) 09/98→06/07 → 166 (936), Page 12												
BRERA 01/06→												
		8100	Bre		2309201	[+] 23092 16		Luc		2376001	[–] 23760 17.8	
1.8 TBi	05/09→	147 / 200										
2.4 JTDM 20V	05/07→	154 / 210	Bre		82505800			Luc		82054900		
					92220903	ø 330 x 28 x 39.7		Luc		82063300		
									PRO	92221103	ø 292 x 22 x 43.2	
		8200	Bre		2485201	[+] 24852 15.8		Luc		2376002	[–] 23760 17.8	
2.0 JTDM	03/08→	120 / 163	Bre		82505800			Luc		82509000		
				PRO	92220803	ø 305 x 28 x 39.7			PRO	92221003	ø 278 x 12 x 43.2	
		8300	Bre		2309201	[+] 23092 16	⊕ sport pack.	Luc		2376002	[–] 23760 17.8	
2.0 JTDM	05/09→	125 / 170	Bre		2485201	[+] 24852 15.8	⊖ sport pack.	Luc		82509000		
			Bre		82505800			Luc		82063300		
				PRO	92220803	ø 305 x 28 x 39.7	⊖ sport pack.		PRO	92221003	ø 278 x 12 x 43.2	
				PRO	92220903	ø 330 x 28 x 39.7	⊕ sport pack.					
		8400	Ate		2433901	[+] 24339 20.5	→03/08	Luc		2376002	[–] 23760 17.8	
2.2 JTS	01/06→	136 / 185	Bre		2485201	[+] 24852 15.8	03/06→	Luc		82509000		
			Bre		82505800		03/06→	Luc		82063300		
			Ate		82030500		→03/08		PRO	92145203	ø 278 x 12 x 43.2	→7026205
				PRO	92145003	ø 305 x 28 x 39.7	→7026205		PRO	92221003	ø 278 x 12 x 43.2	7026206→
				PRO	92220803	ø 305 x 28 x 39.7	7026206→					
		8500	Bre		2309201	[+] 23092 16		Luc		2376001	[–] 23760 17.8	
2.4 JTDM 20V	01/06→	147 / 200										
3.2 JTS	03/08→	191 / 260	Bre		82505800			Luc		82054900		
3.2 JTS Q4	01/06→	191 / 260			92145100	ø 330 x 28 x 39.7	→7026205	Luc		82063300		
				PRO	92145103	ø 330 x 28 x 39.7	→7026205		PRO	92145303	ø 292 x 22 x 43.2	→7026205
				PRO	92220903	ø 330 x 28 x 39.7	7026206→		PRO	92221103	ø 292 x 22 x 43.2	7026206→

GIULIETTA (940) 04/10→

		kW / hp											
		8600	Ate		2518001	[+] 25180 18.5		Luc		2381101	[+] 23811 17.8	⊕ sport pack.
1.4 BiFuel	12/11→	88 / 120										
1.4 TB	04/10→	85 / 116	Bre		2375601	[+] 23756 15.7	⊕ sport pack. →05/12			2515601	[+] 25156 17.8	
1.4 TB	04/10→	88 / 120										
1.4 TB	04/11→	77 / 105	Bre		2375603	[+] 23756 16	⊕ sport pack. 05/12→	Luc		82518700		
1.6 JTDM	04/10→	77 / 105										
			Ate		82032300				PRO	92221003	ø 278 x 12 x 43.2	⊕ sport pack.
				PRO	92220903	ø 330 x 28 x 39.7	⊕ sport pack.		PRO	92230203	ø 264 x 10 x 40.5	
				PRO	92230103	ø 281 x 26 x 39.7						
		8700	Ate		2434001	[+] 24340 20.1		Luc		2381101	[+] 23811 17.8	⊕ sport pack.
1.4 TB	04/10→	120 / 163										
1.4 TB	04/10→	125 / 170	Bre		2375601	[+] 23756 15.7	⊕ sport pack. →05/12			2515601	[+] 25156 17.8	
2.0 JTDM	04/10→	100 / 136										
2.0 JTDM	04/10→	103 / 140	Bre		2375603	[+] 23756 16	⊕ sport pack. 05/12→	Luc		82518700		
2.0 JTDM	04/10→	120 / 163										
			Ate		82076900				PRO	92221003	ø 278 x 12 x 43.2	⊕ sport pack.
				PRO	92220803	ø 305 x 28 x 39.7			PRO	92230203	ø 264 x 10 x 40.5	
				PRO	92220903	ø 330 x 28 x 39.7	⊕ sport pack.					
		8800	Bre		2375601	[+] 23756 15.7	→05/12	Luc		2381101	[+] 23811 17.8	
1.8 TBi	04/10→	173 / 235										
			Bre		2375603	[+] 23756 16	06/12→	Luc		82060100		
			Bre		82505800				PRO	92221003	ø 278 x 12 x 43.2	
				PRO	92220903	ø 330 x 28 x 39.7						
		8900	Bre		2375601	[+] 23756 15.7	⊕ sport pack.	Luc		2381101	[+] 23811 17.8	⊕ sport pack.
1.8 TBi	09/13→	177 / 241										
2.0 JTDM	08/13→	110 / 150	Bre		2375603	[+] 23756 16	⊕ sport pack.		PRO	92221003	ø 278 x 12 x 43.2	⊕ sport pack.
				PRO	92220903	ø 330 x 28 x 39.7	⊕ sport pack.					
		9000	Ate		2434001	[+] 24340 20.1	⊖ sport pack.	Luc		2381101	[+] 23811 17.8	⊕ sport pack.
2.0 JTDM	04/10→	125 / 170										
			Bre		2375601	[+] 23756 15.7	⊕ sport pack. →05/12			2515601	[+] 25156 17.8	⊖ sport pack.
			Bre		2375603	[+] 23756 16	⊕ sport pack. 06/12→	Luc		82518700		
			Ate		82076900				PRO	92221003	ø 278 x 12 x 43.2	⊕ sport pack.
				PRO	92220803	ø 305 x 28 x 39.7	⊖ sport pack.		PRO	92230203	ø 264 x 10 x 40.5	⊖ sport pack.
				PRO	92220903	ø 330 x 28 x 39.7	⊕ sport pack.					
		9100	Bre		2375603	[+] 23756 16				2515601	[+] 25156 17.8	
2.0 JTDM	11/13→	129 / 175										
				PRO	92220903	ø 330 x 28 x 39.7			PRO	92230203	ø 264 x 10 x 40.5	

GT (937) 11/03→09/10

		9200	Ate		2322201	[+] 23222 19	⊕ classic line	Luc		2351703	[–] 23517 16.5	⊕ classic line
1.8 TS	11/03→09/10	103 / 140										
2.0 JTS	11/03→09/10	121 / 165	Ate		82032000			Luc		82060100		
			Ate		82062900			Luc		82063300		
					92046800	ø 284 x 22 x 43.5				92114700	ø 276 x 10 x 45.7	
				PRO	92046803	ø 284 x 22 x 43.5						
		9300	Ate		2322201	[+] 23222 19	⊕ classic line	Luc		2351703	[–] 23517 16.5	⊕ classic line
1.9 JTD	11/03→09/10	110 / 150										
1.9 JTD	05/08→09/10	125 / 170	Ate		2328902	[+] 23289 19		Luc		82060100		
2.0 JTS	12/06→09/10	119 / 162										
			Ate		82032000			Luc		82063300		
			Ate		82062900					92114700	ø 276 x 10 x 45.7	
					92046800	ø 284 x 22 x 43.5						
				PRO	92046803	ø 284 x 22 x 43.5						
		9400	Ate		2322201	[+] 23222 19		Luc		2351703	[–] 23517 16.5	
2.0	09/06→12/08	110 / 150										

ALFA ROMEO

ALFA ROMEO

		kW / hp										
GT (937) 11/03→09/10												
2.0	09/06→12/08	9400 110 / 150	Ate		82032000					92114700	ø 276 x 10 x 45.7	
					92046800	ø 284 x 22 x 43.5						
				PRO	92046803	ø 284 x 22 x 43.5						
3.2 GTA	11/03→09/10	9500 176 / 240	Ate		2322201	[+] 23222 19	⊕ classic line	Luc		2351703	[–] 23517 16.5	⊕ classic line
3.2 JTS	09/06→12/07	177 / 237	Bre		2427301	[+] 24273 16		Luc		82060100		
					92119600	ø 330 x 32 x 44.7		Luc		82063300		
										92114700	ø 276 x 10 x 45.7	
GTV (916C_) 06/95→10/05												
1.8 16V (916C3)	05/98→10/05	9600 106 / 144	Ate		2328902	[+] 23289 19		Luc		2317703	[–] 23177 14.4	
			Ate		82032000			Luc		82037300		
			Ate		82062900			Luc		82062800		
				PRO	92083203	ø 284 x 22 x 39.4			PRO	92083303	ø 240 x 11 x 40	
2.0 JTS	04/03→10/05	9700 121 / 165	Ate		2328902	[+] 23289 19		Luc		2317703	[–] 23177 14.4	
			Ate		82032000			Luc		82037300		
			Ate		82062900			Luc		82062800		
					92046800	ø 284 x 22 x 43.5			PRO	92083303	ø 240 x 11 x 40	
				PRO	92046803	ø 284 x 22 x 43.5						
2.0 T.SPARK 16V (916.C2__, 916C2C00)	06/95→10/05	9800 110 / 150	Ate		2192901	[+] 21929 17.9	Teves →05/98	Luc		2317703	[–] 23177 14.4	
			Luc		2316803	[+] 23168 19.3	Lucas →05/98	Luc		82037300		
			Ate		2328902	[+] 23289 19	05/98→	Luc		82062800		
			Ate		82032000				PRO	92083303	ø 240 x 11 x 40	
			Luc		82062800		→05/98					
			Ate		82062900							
				PRO	92083203	ø 284 x 22 x 39.4	6009487→					
2.0 T.SPARK 16V (916C2C)	05/98→08/00	9900 114 / 155	Ate		2192901	[+] 21929 17.9	Teves →05/98	Luc		2317703	[–] 23177 14.4	
			Luc		2316803	[+] 23168 19.3	Lucas →05/98	Luc		82037300		
			Ate		2328902	[+] 23289 19		Luc		82062800		
			Ate		82032000				PRO	92083303	ø 240 x 11 x 40	
			Luc		82062800		→05/98					
			Ate		82062900							
				PRO	92083203	ø 284 x 22 x 39.4	6009487→					
3.0 V6 24V (916.C1)	10/96→10/00	10000 162 / 220	Bre		2138103	[+] 21381 18		Luc		2317703	[–] 23177 14.4	
3.0 V6 24V (916.C1B__)	10/00→10/05	160 / 218	Bre		82061600			Luc		82037300		
3.2 V6 24V	04/03→10/05	176 / 240			92092700	ø 305 x 28 x 44.7		Luc		82062800		
									PRO	92083303	ø 240 x 11 x 40	
MITO (955) 09/08→												
0.9	07/11→	10100 63 / 86	Bos		2397901	[+] 23979 17.8		Luc		2351705	[+] 23517 17.2	
1.4	03/11→	57 / 78										
1.4	03/11→	57 / 78	Bos		82054300			Luc		82060100		
1.4	05/11→	51 / 69										
1.4 Bifuel	07/11→	88 / 120		PRO	92069603	ø 257 x 22 x 40.5			PRO	92202303	ø 251 x 10 x 40.7	
0.9	04/13→	10200 77 / 105	Bos		2397901	[+] 23979 17.8		Luc		2351705	[+] 23517 17.2	
0.9	12/13→	74 / 101										

→

ALFA ROMEO

ALFA ROMEO

		kW / hp											
MITO (955) 09/08→													
		10200		PRO	92069603	ø 257 x 22 x 40.5			PRO	92202303	ø 251 x 10 x 40.7	⊕ steel rim
0.9	04/13→	77 / 105											
0.9	12/13→	74 / 101											
		10300	Bos		2371102	[+] 23711 18.2	→07/10 →1096215		Bos	2371401	[–] 23714 15.5	
1.3 JTDM	09/08→	66 / 90											
1.3 JTDM	10/09→	70 / 95	Bos		2371104	[+] 23711 19.4	07/10→ 1096216→		Bos	2371481	[–] 23714 15.5	
1.4	09/08→	88 / 120							epad			
1.4 TB	10/09→	99 / 135											
1.6 JTDM	09/08→	85 / 115	Bos		82054200				Bos	82054300		
1.6 JTDM	09/08→	88 / 120											
				PRO	92107703	ø 281 x 26 x 43.5			PRO	92202303	ø 251 x 10 x 40.7	
		10400	Bos		2371104	[+] 23711 19.4	1096216→		Bos	2371401	[–] 23714 15.5	
1.3 JTDM	01/11→	62 / 84											
			Bos		82054200				Bos	2371481	[–] 23714 15.5	
									epad			
				PRO	92107703	ø 281 x 26 x 43.5			Bos	82054300		
									PRO	92202303	ø 251 x 10 x 40.7	
		10500	Bos		2371104	[+] 23711 19.4			Luc	2351705	[+] 23517 17.2	
1.3 JTDM	12/13→	59 / 80											
				PRO	92107703	ø 281 x 26 x 43.5			PRO	92202303	ø 251 x 10 x 40.7	⊕ steel rim
		10600	Bos		2397901	[+] 23979 17.8			Bos	2371401	[–] 23714 15.5	
1.4	09/08→	58 / 78											
1.4	08/10→	77 / 105	Bos		82054300				Bos	2371481	[–] 23714 15.5	
1.4 TB	10/09→	120 / 163							epad			
				PRO	92069603	ø 257 x 22 x 40.5			Bos	82054300		
									PRO	92202303	ø 251 x 10 x 40.7	
		10700	Bos		2397901	[+] 23979 17.8			Bos	2371401	[–] 23714 15.5	
1.4	09/08→	70 / 95											
			Bos		82054300				Bos	2371481	[–] 23714 15.5	
									epad			
				PRO	92069603	ø 257 x 22 x 40.5			Luc	2351705	[+] 23517 17.2	
									Bos	82054300		
									PRO	92202303	ø 251 x 10 x 40.7	
		10800	Bre		2416202	[+] 24162 15.3			Bos	2371401	[–] 23714 15.5	
1.4 TB	09/08→	114 / 155											
			Bre		82518000				Bos	2371481	[–] 23714 15.5	
									epad			
				PRO	92107703	ø 281 x 26 x 43.5			Bos	82054300		
									PRO	92202303	ø 251 x 10 x 40.7	
		10900	Bre		2416202	[+] 24162 15.3			Bos	2371401	[–] 23714 15.5	
1.4 TB	10/09→	125 / 170											
1.4 Turbo	09/08→	110 / 150	Bre		82518000				Bos	2371481	[–] 23714 15.5	
									epad			
				PRO	92228503	ø 305 x 28 x 45			Bos	82054300		
									PRO	92202303	ø 251 x 10 x 40.7	
		11000	Bos		2371104	[+] 23711 19.4			Luc	2351705	[+] 23517 17.2	
1.4 TB	12/13→	103 / 140											
				PRO	92107703	ø 281 x 26 x 43.5						
SPIDER (916S_) 09/94→04/05													
		11100	Ate		2328902	[+] 23289 19			Luc	2317703	[–] 23177 14.4	
1.8 16V (916S3)	05/98→04/05	106 / 144											
2.0 JTS	04/03→04/05	121 / 165	Ate		82032000				Luc	82037300		
			Ate		82062900				Luc	82062800		
				PRO	92083203	ø 284 x 22 x 39.4			PRO	92083303	ø 240 x 11 x 40	
		11200	Luc		2083302	[+] 20833 17.1	Lucas →05/98		Luc	2317703	[–] 23177 14.4	
2.0 T.SPARK 16V (916S2B)	05/98→08/00	114 / 155											
2.0 V6 Turbo (916S2A)	05/98→04/05	148 / 202	Ate		2192901	[+] 21929 17.9	Teves →05/98		Luc	82037300		
			Luc		2316803	[+] 23168 19.3	Lucas →05/98		Luc	82062800		
			Ate		2328902	[+] 23289 19			PRO	92083303	ø 240 x 11 x 40	
			Ate		82032000							

ALFA ROMEO

ALFA ROMEO

		kW / hp										
SPIDER (916S_) 09/94→04/05												
11200												
2.0 T.SPARK 16V (916S2B)	05/98→08/00	114 / 155	Luc		**82062800**		→05/98					
2.0 V6 Turbo (916S2A)	05/98→04/05	148 / 202	Ate		**82062900**							
					92083100	ø 257 x 20 x 40.5	→6009486					
				PRO	**92083203**	ø 284 x 22 x 39.4	6009487→					
11300												
2.0 T.SPARK 16V (916S2C00)	06/95→04/05	110 / 150	Luc		**2083302**	[+] 20833 17.1	Lucas →05/98	Luc		**2317703**	[–] 23177 14.4	
			Ate		**2192901**	[+] 21929 17.9	Teves →05/98	Luc		**82037300**		
			Luc		**2316803**	[+] 23168 19.3	Lucas →05/98	Luc		**82062800**		
			Ate		**2328902**	[+] 23289 19	05/98→		PRO	**92083303**	ø 240 x 11 x 40	
			Ate		**82032000**							
			Luc		**82062800**		→05/98					
			Ate		**82062900**							
					92083100	ø 257 x 20 x 40.5	→6009486					
				PRO	**92083203**	ø 284 x 22 x 39.4	6009487→					
11400												
3.0 V6 (916S1)	06/95→04/05	141 / 192	Ate		**2192901**	[+] 21929 17.9	Teves →05/98	Luc		**2317703**	[–] 23177 14.4	
			Luc		**2316803**	[+] 23168 19.3	Lucas →05/98	Luc		**82037300**		
			Ate		**2328902**	[+] 23289 19	05/98→	Luc		**82062800**		
			Ate		**82032000**				PRO	**92083303**	ø 240 x 11 x 40	
			Luc		**82062800**		→05/98					
			Ate		**82062900**							
					92046800	ø 284 x 22 x 43.5						
				PRO	**92046803**	ø 284 x 22 x 43.5						
11500												
3.0 V6 (916S1B00)	09/94→08/00	160 / 218	Bre		**2138103**	[+] 21381 18		Luc		**2317703**	[–] 23177 14.4	
3.0 V6 24V	01/99→10/03	162 / 220	Bre		**82061600**			Luc		**82037300**		
3.2 V6 24V	04/03→04/05	176 / 240			**92092700**	ø 305 x 28 x 44.7		Luc		**82062800**		
									PRO	**92083303**	ø 240 x 11 x 40	
SPIDER (939) 09/06→												
11600												
1.8 TBi	05/09→	147 / 200	Bre		**2309201**	[+] 23092 16		Luc		**2376001**	[–] 23760 17.8	
3.2 JTS	03/08→	191 / 260	Bre		**82505800**			Luc		**82054900**		
3.2 JTS Q4	09/06→	191 / 260			**92145100**	ø 330 x 28 x 39.7	→7026205		PRO	**92145303**	ø 292 x 22 x 43.2	→7026205
				PRO	**92145103**	ø 330 x 28 x 39.7	→7026205		PRO	**92221103**	ø 292 x 22 x 43.2	7026206→
				PRO	**92220903**	ø 330 x 28 x 39.7	7026206→					
11700												
2.0 JTDM	04/09→	120 / 163	Bre		**2485201**	[+] 24852 15.8		Luc		**2376002**	[–] 23760 17.8	
			Bre		**82505800**			Luc		**82509000**		
				PRO	**92220803**	ø 305 x 28 x 39.7			PRO	**92221003**	ø 278 x 12 x 43.2	
11800												
2.0 JTDM	05/09→	125 / 170	Bre		**2485201**	[+] 24852 15.8		Luc		**2376002**	[–] 23760 17.8	
			Bre		**82505800**			Luc		**82509000**		
				PRO	**92145003**	ø 305 x 28 x 39.7	→7026205	Luc		**82063300**		
				PRO	**92220803**	ø 305 x 28 x 39.7	7026206→		PRO	**92145203**	ø 278 x 12 x 43.2	→7026205
									PRO	**92221003**	ø 278 x 12 x 43.2	7026206→
11900												
2.2 JTS	09/06→	136 / 185	Ate		**2433901**	[+] 24339 20.5	→03/08	Luc		**2376002**	[–] 23760 17.8	

→

ALFA ROMEO

ALFA ROMEO

SPIDER (939) 09/06→

		kW / hp											
2.2 JTS	09/06→	11900 136 / 185	Bre		2485201	[+] 24852 15.8		Luc		82509000		
			Bre		82505800			Luc		82063300		
			Ate		82030500		→03/08		PRO	92145203	ø 278 x 12 x 43.2	→7026205
				PRO	92145003	ø 305 x 28 x 39.7	→7026205		PRO	92221003	ø 278 x 12 x 43.2	7026206→
				PRO	92220803	ø 305 x 28 x 39.7	7026206→					
2.4 JTDM	04/07→	12000 147 / 200	Ate		2433901	[+] 24339 20.5		Luc		2376001	[–] 23760 17.8	
2.4 JTDM	03/08→	154 / 210	Ate		82030500			Luc		82054900		
					92145100	ø 330 x 28 x 39.7	→7026205	Luc		82063300		
				PRO	92145103	ø 330 x 28 x 39.7	→7026205		PRO	92145303	ø 292 x 22 x 43.2	→7026205
				PRO	92220903	ø 330 x 28 x 39.7	7026206→		PRO	92221103	ø 292 x 22 x 43.2	7026206→

ALPINA

ALPINA

B7 (F01, F02) 09/09→

		kW / hp											
4.4 BiTurbo	09/09→	12100 373 / 507	Ate		2504501	[o] 25045 19.3		Ate		2373101	[o] 23731 16.9	
			Ate	epad	2504581	[o] 25045 19.3				98042500	L1066	
					98042400	L1083		Ate		82057500		
					TPM0003					TPM0003		
										91058700	ø 185 x 30	
										97032200		

B10 (E39) 10/98→09/02

		kW / hp											
4.6 V8	10/98→09/02	12200 255 / 347	Ate		2148602	[o] 21486 19.3		Ate		2169103	[o] 21691 17.3	
			Ate	epad	2148681	[o] 21486 19.3		Ate	epad	2169181	[o] 21691 17.3	
					98020600	L840				98020700	L545	
			Ate		82030500		04/00→	Ate		82062900		
			Ate		82059100		→03/00	Ate		82071500		
			Ate		82062900				PRO	92075103	ø 298 x 20 x 61	
					92058300	ø 324 x 30 x 77.1	→03/00			TPM0003		
					92107100	ø 324 x 30 x 73.5	04/00→			91049300	ø 185 x 20	
				PRO	92107105	ø 324 x 30 x 73.5	04/00→			97003100		
					TPM0003							

B10 Estate (E39) 10/98→09/02

		kW / hp											
4.6 V8	10/98→09/02	12300 255 / 347	Ate		2148602	[o] 21486 19.3		Ate		2169103	[o] 21691 17.3	
			Ate	epad	2148681	[o] 21486 19.3		Ate	epad	2169181	[o] 21691 17.3	
					98020600	L840				98020700	L545	
			Ate		82030500		04/00→	Ate		82062900		
			Ate		82059100		→03/00	Ate		82071500		
			Ate		82062900				PRO	92075103	ø 298 x 20 x 61	
					92058300	ø 324 x 30 x 77.1	→03/00			TPM0003		
					92107100	ø 324 x 30 x 73.5	04/00→			91049300	ø 185 x 20	
				PRO	92107105	ø 324 x 30 x 73.5	04/00→			97003100		

ALPINA

ALPINA

30	kW / hp												
B10 Estate (E39) 10/98→09/02													
	12300			TPM0003									
4.6 V8	10/98→09/02	255 / 347											
B10 Kombi (E39) 10/98→09/02 → B10 Estate (E39), Page 17													
ROADSTER (Z8) 06/02→10/03													
	12400		Ate	2148401	[o] 21484 20.8		Ate	2148701	[o] 21487 17.2				
4.8 V8	06/02→10/03	280 / 381		98027000	L760		Ate	2148781	[o] 21487 17.2				
			Ate	82030500				98020700	L545				
			Ate	82062900			Ate	82062900					
				TPM0003				92074900	ø 328 x 20 x 61				
								TPM0003					
								91033400	ø 180 x 25				

ASIA MOTORS

ASIA MOTORS

30	kW / hp												
HI-TOPIC (AM 725) 06/93→12/99													
	12500		Sum	2378401	[+] 23784 15.5			91040100	ø 260 x 51				
2.7 15 STD	01/98→12/99	51 / 69											
2.7 D Rear Wheel Drive	06/93→12/99	55 / 75						94035500	ø 260,0 x 63				
RETONA Closed Off-Road Vehicle 06/95→06/00													
	12600		Sum	2344201	[+] 23442 16								
2.0	06/95→06/00	94 / 128											
2.0	06/95→06/00	100 / 136											
2.0 TD	06/95→06/00	61 / 83		92104400	ø 284 x 24 x 51.1								
RETONA Geländewagen geschlossen 06/95→06/00 → RETONA Closed Off-Road Vehicle, Page 18													
ROCSTA 06/93→12/99													
	12700		Ake	2069901	[–] 20699 15.2	→06/98		91040100	ø 260 x 51	→06/94			
1.8 i 4x4	06/93→12/99	57 / 77											
2.2 D 4x4	06/93→12/99	45 / 61											
TOWNER Box (AS_) 07/92→12/02													
	12800		Sum	2078001	[–] 20780 13.4								
0.8	07/92→12/02	31 / 42											
0.8	07/92→12/02	33 / 45											
0.8	07/96→09/01	29 / 39											
TOWNER Bus (AS_) 07/92→12/02													
	12900		Sum	2078001	[–] 20780 13.4								
0.8	07/92→12/02	33 / 45											
0.8	07/96→09/01	29 / 39											
0.8	02/97→12/02	31 / 42											
TOWNER Kasten (AS_) 07/92→12/02 → TOWNER Box (AS_), Page 18													

ASTON MARTIN

ASTON MARTIN

30	kW / hp												
CYGNET 04/11→10/13													
	13000		Adv	2477801	[+] 24778 16.6		Ake	2461001	[+] 24610 14.3				
1.3	04/11→10/13	72 / 98	Adv	82075300			Ake	82509700					
				92199900	ø 255 x 20 x 46.2			92156300	ø 259 x 9 x 30.3				
DB7 Cabriolet 11/95→10/03 → DB7 Convertible, Page 18													
DB7 Convertible 11/95→10/03													
	13100		Luc	2038001	[–] 20380 15.6								
3.2	11/95→06/99	233 / 317											
3.2	01/96→10/03	250 / 340											
5.9	03/99→10/03	309 / 420											
5.9	07/99→10/03	298 / 405											
DB7 Coupe 01/94→10/03													
	13200		Luc	2038001	[–] 20380 15.6								
3.2	01/94→10/03	250 / 340											
5.9	03/99→10/03	309 / 420											
5.9	07/99→10/03	298 / 405											
6.0	10/02→10/03	320 / 435											
	13300		Luc	2038001	[–] 20380 15.6		Ate	2448701	[o] 24487 16				
3.2	05/94→06/99	233 / 317					Ate	2127501	[+] 21275 16.9				

ASTON MARTIN

ASTON MARTIN

		kW / hp											
DB9 Cabriolet 04/04→07/12 → DB9 Convertible, Page 19													
DB9 Convertible 04/04→07/12													
		13400	Bre		2021703	[o] 20217 16.6		Bre		2016501	[o] 20165 15.6	
6.0	04/04→07/12	331 / 450			98048800	L832				98048900	L677	
6.0 V12	09/05→07/12	350 / 476						Bre		2061005	[–] 20610	
DB9 Coupe 01/04→													
		13500	Bre		2021703	[o] 20217 16.6		Bre		2016501	[o] 20165 15.6	
4.2 V8	06/05→	283 / 385			98048800	L832				98048900	L677	
6.0 V12	01/04→	331 / 450						Bre		2061005	[–] 20610	
6.0 V12	01/08→07/12	350 / 476										
DBS Coupe 09/07→													
		13600						Bre		2061005	[–] 20610	
6.0 V12	09/07→	380 / 517										
DBS Volante 09/07→													
		13700						Bre		2061005	[–] 20610	
6.0 V12	09/07→	380 / 517										
RAPIDE 03/10→													
		13800						Bre		2061005	[–] 20610	
5.9	03/10→	350 / 476										
VANTAGE Coupe 10/05→													
		13900	Bre		2021703	[o] 20217 16.6		Bre		2016501	[o] 20165 15.6	
4.3	10/05→	283 / 385			98048800	L832				98049000	L555	
4.7	10/08→	313 / 426						Bre		2061005	[–] 20610	
4.7 S	01/11→	321 / 437										
		14000						Bre		2061005	[–] 20610	
5.9 V12	09/09→	380 / 517										
VANTAGE Roadster 04/07→													
		14100	Bre		2021703	[o] 20217 16.6		Bre		2016501	[o] 20165 15.6	
4.3	04/07→	283 / 385			98048800	L832				98049000	L555	
4.7	10/08→	313 / 426						Bre		2061005	[–] 20610	
4.7 S	06/11→	321 / 437										
VIRAGE Cabriolet 01/97→12/00 → VIRAGE Convertible, Page 19													
VIRAGE Convertible 01/97→12/00													
		14200	Luc		2002701	[–] 20027 16		Luc		2000702	[–] 20007 15.2	
5.3	01/97→12/00	261 / 354										
VIRAGE Coupe 10/92→10/00													
		14300	Luc		2002701	[–] 20027 16		Luc		2000702	[–] 20007 15.2	
5.3	10/92→10/00	410 / 507										

AUDI

AUDI

		kW / hp											
A1 (8X1, 8XF) 05/10→													
		14400	Ate		2313001	[–] 23130 19.7		Luc		2355402	[–] 23554 17.2	
1.2 TFSI	05/10→	63 / 86	Ate	epad	2313081	[–] 23130 19.7		Luc	epad	2355481	[–] 23554 17.2	
1.6 TDI	03/11→	66 / 90	Ate		82062900				PRO	92082503	ø 232 x 9 x 39.3	
				PRO	92082203	ø 256 x 22 x 36.5				TPM0008		
					TPM0008							
		14500	Ate		2358704	[–] 23587 20.3		Luc		2355402	[–] 23554 17.2	
1.4 TFSI	05/10→	90 / 122	Ate		2358782	[–] 23587 20.3		Luc	epad	2355481	[–] 23554 17.2	
1.4 TFSI	01/11→	136 / 185	Ate		82062900				PRO	92082503	ø 232 x 9 x 39.3	
1.4 TFSI	04/12→	103 / 140	Ate		82076800					TPM0008		
1.6 TDI	05/10→	77 / 105		PRO	92106603	ø 288 x 25 x 34.4						
2.0 TDI	09/11→	105 / 143			TPM0008							
2.0 TDI	05/12→	100 / 136										

AUDI

AUDI

		kW / hp											
A1 (8X1, 8XF) 05/10→													
		14600	Ate		2358701	[+] 23587 20.3		Bos		2456301	[–] 24563 17.7	
2.0 TFSI quattro	03/12→	188 / 256	Ate	epad	2358781	[+] 23587 20.3		Bos		82054300		
			Ate		82062900				PRO	92224903	ø 272 x 10 x 48.3	
				PRO	92120503	ø 312 x 25 x 49.7				TPM0008		
					TPM0008							
		14700	Ate		2358701	[+] 23587 20.3	PR 1LJ	Bos		2456301	[–] 24563 17.7	
S1 quattro	03/14→	170 / 231	Ate	epad	2358781	[+] 23587 20.3	PR 1LJ	Bos		82054300		
			Ate		82076800				PRO	92224903	ø 272 x 10 x 48.3	
				PRO	92120503	ø 312 x 25 x 49.7	PR 1LJ			TPM0008		
					TPM0008							
A1 Sportback (8XA, 8XK) 09/11→													
		14800	Ate		2313001	[–] 23130 19.7		Luc		2355402	[–] 23554 17.2	
1.2 TFSI	01/12→	63 / 86											
1.6 TDI	11/11→	66 / 90	Ate	epad	2313081	[–] 23130 19.7		Luc	epad	2355481	[–] 23554 17.2	
			Ate		82062900				PRO	92082503	ø 232 x 9 x 39.3	
				PRO	92082203	ø 256 x 22 x 36.5				TPM0008		
					TPM0008							
		14900	Ate		2358704	[–] 23587 20.3		Luc		2355402	[–] 23554 17.2	
1.4 TFSI	11/11→	90 / 122											
1.4 TFSI	11/11→	136 / 185	Ate		2358782	[–] 23587 20.3		Luc	epad	2355481	[–] 23554 17.2	
1.4 TFSI	04/12→	103 / 140											
1.6 TDI	11/11→	77 / 105											
2.0 TDI	09/11→	105 / 143	Ate		82062900				PRO	92082503	ø 232 x 9 x 39.3	
2.0 TDI	05/12→	100 / 136	Ate		82076800					TPM0008		
				PRO	92106603	ø 288 x 25 x 34.4						
					TPM0008							
		15000	Ate		2358701	[+] 23587 20.3	PR 1LJ	Bos		2456301	[–] 24563 17.7	
S1 quattro	03/14→	170 / 231	Ate	epad	2358781	[+] 23587 20.3	PR 1LJ	Bos		82054300		
			Ate		82076800				PRO	92224903	ø 272 x 10 x 48.3	
				PRO	92120503	ø 312 x 25 x 49.7	PR 1LJ			TPM0008		
					TPM0008							
A2 (8Z0) 02/00→08/05													
		15100	Ate		2339502	[+] 23395 14.5						
1.2 TDI	03/01→08/05	45 / 61	Ate		82062900							
				PRO	92106403	ø 239 x 15 x 34.2						
					TPM0008							
		15200	Ate		2313101	[+] 23131 19.7				91044700	ø 200 x 40	
1.4	02/00→08/05	55 / 75										
1.4 TDI	02/00→08/05	55 / 75	Ate	epad	2313181	[+] 23131 19.7		Ate		97006500		
			Ate		82062900					84044706	bore ø 17.5 ø 200 x 40	
				PRO	92082203	ø 256 x 22 x 36.5				94023800	ø 200,0 x 50.5	
					TPM0008							
		15300	Ate		2313101	[+] 23131 19.7		Luc		2355402	[–] 23554 17.2	
1.4 TDI	11/03→08/05	66 / 90										
1.6 FSI	05/02→08/05	81 / 110	Ate	epad	2313181	[+] 23131 19.7		Luc	epad	2355481	[–] 23554 17.2	
			Ate		82062900			Luc		82037300		

→

30 kW / hp													
A2 (8Z0) 02/00→08/05													
15300													
1.4 TDI	11/03→08/05	66 / 90		PRO	92082203	ø 256 x 22 x 36.5		Luc		82063300			
1.6 FSI	05/02→08/05	81 / 110			TPM0008				PRO	92082503	ø 232 x 9 x 39.3		
										TPM0008			
A3 (8L1) 09/96→05/03													
15400			Ate		2313001	[–] 23130 19.7	→8L-X-200000 →06/99	Luc		2355402	[–] 23554 17.2		
1.6	09/96→05/03	74 / 101											
1.8	09/96→05/03	92 / 125	Ate	epad	2313081	[–] 23130 19.7	→8L-X-200000 →06/99	Luc	epad	2355481	[–] 23554 17.2		
1.9 TDI	09/96→07/01	66 / 90											
1.9 TDI	08/97→07/01	81 / 110	Ate		2313101	[+] 23131 19.7	8L-Y-000001→ 07/99→	Luc		82037300			
			Ate	epad	2313181	[+] 23131 19.7	8L-Y-000001→ 07/99→	Luc		82063300			
			Ate		82062900				PRO	92082503	ø 232 x 9 x 39.3		
				PRO	92082203	ø 256 x 22 x 36.5	PR 1LQ			TPM0008			
				PRO	92082303	ø 280 x 22 x 36.5	PR 1LR,1LS,1ZP						
					TPM0008								
15500			Ate		2313101	[+] 23131 19.7		Luc		2355402	[–] 23554 17.2		
1.6	08/00→05/03	75 / 102											
1.9 TDI	10/00→05/03	74 / 100	Ate	epad	2313181	[+] 23131 19.7		Luc	epad	2355481	[–] 23554 17.2		
			Ate		82062900			Luc		82037300			
				PRO	92082203	ø 256 x 22 x 36.5	PR 1LQ	Luc		82063300			
				PRO	92082303	ø 280 x 22 x 36.5	PR 1LR,1LS,1ZP		PRO	92082503	ø 232 x 9 x 39.3		
					TPM0008					TPM0008			
15600			Ate		2191102	[–] 21911 20.6	→8L-X-200000 →06/99	Luc		2355402	[–] 23554 17.2		
1.8 T	12/96→05/03	110 / 150											
1.8 T	09/97→05/03	133 / 181	Ate		2339201	[+] 23392 20.6	8L-Y-000001→ 07/99→	Luc	epad	2355481	[–] 23554 17.2		
1.8 T	12/98→05/03	132 / 180											
1.8 T quattro	12/96→05/03	110 / 150	Ate		82029300			Luc		82037300			
1.8 T quattro	10/98→05/03	132 / 180	Ate		82062900			Luc		82063300			
				PRO	92098503	ø 312 x 25 x 34	PR 1LT		PRO	92082503	ø 232 x 9 x 39.3		
				PRO	92106603	ø 288 x 25 x 34.4	PR 1LE,1LN,1ZD			TPM0008			
					TPM0008								
15700			Ate		2339201	[+] 23392 20.6		Luc		2355402	[–] 23554 17.2		
1.9 TDI	08/00→05/03	96 / 130											
			Ate		82029300			Luc	epad	2355481	[–] 23554 17.2		
			Ate		82062900			Luc		82037300			
				PRO	92098503	ø 312 x 25 x 34	PR 1LT	Luc		82063300			
				PRO	92106603	ø 288 x 25 x 34.4	PR 1LE,1LN,1ZD		PRO	92082503	ø 232 x 9 x 39.3		
					TPM0008					TPM0008			
15800			Ate		2339201	[+] 23392 20.6		Luc		2355402	[–] 23554 17.2		
1.9 TDI quattro	08/00→05/03	96 / 130											
			Ate		82029300			Luc	epad	2355481	[–] 23554 17.2		
			Ate		82062900			Luc		82037300			
				PRO	92098503	ø 312 x 25 x 34	PR 1LT	Luc		82063300			
				PRO	92106603	ø 288 x 25 x 34.4	PR 1LE,1LN,1ZD		PRO	92105803	ø 239 x 9 x 33.5		
					TPM0008					TPM0008			
15900			Ate		2191102	[–] 21911 20.6	→8L-X-200000 →06/99	Luc		2355402	[–] 23554 17.2		
S3 quattro	03/99→04/02	154 / 210											
			Ate		2339201	[+] 23392 20.6	8L-Y-000001→ 07/99→	Luc	epad	2355481	[–] 23554 17.2		
			Ate		82029300			Luc		82502100			

AUDI

AUDI

		kW / hp									
A3 (8L1) 09/96→05/03											
		15900	Ate		82062900			Luc		82063300	
S3 quattro	03/99→04/02	154 / 210		PRO	92098503	ø 312 x 25 x 34			PRO	92098603	ø 256 x 22 x 36.7
					TPM0008					TPM0008	
		16000	Ate		2339201	[+] 23392 20.6		Luc		2355402	[–] 23554 17.2
S3 quattro	10/01→05/03	165 / 224	Ate		82029300			Luc	epad	2355481	[–] 23554 17.2
			Ate		82062900			Luc		82502100	
				PRO	92098503	ø 312 x 25 x 34		Luc		82063300	
					TPM0008				PRO	92098603	ø 256 x 22 x 36.7
										TPM0008	
A3 (8P1) 05/03→08/12											
		16100	Ate		2313101	[+] 23131 19.7		Luc		2355402	[–] 23554 17.2
1.2 TSI	04/10→08/12	77 / 105									
1.6	05/03→08/12	75 / 102	Ate	epad	2313181	[+] 23131 19.7		Luc	epad	2355481	[–] 23554 17.2
1.6 E-Power	01/11→08/12	75 / 102									
1.6 FSI	08/03→09/07	85 / 115	Ate		82062900			Luc		82037300	
1.6 TDI	05/09→08/12	66 / 90		PRO	92120703	ø 280 x 22 x 49.9		Luc		82063300	
1.6 TDI	05/09→08/12	77 / 105		PRO	92120705	ø 280 x 22 x 49.9			PRO	92120903	ø 255 x 10 x 51.6
					TPM0008					TPM0008	
		16200	Ate		2358701	[+] 23587 20.3		Luc		2355402	[–] 23554 17.2
1.4 TFSI	09/07→08/12	92 / 125									
1.8 TFSI quattro	07/08→08/12	118 / 160	Ate	epad	2358781	[+] 23587 20.3		Luc	epad	2355481	[–] 23554 17.2
2.0 FSI	05/03→06/08	110 / 150									
2.0 TDI	06/05→06/08	103 / 140	Ate		82076800			Luc		82037300	
				PRO	92120803	ø 288 x 25 x 49.8		Luc		82063300	
				PRO	92120805	ø 288 x 25 x 49.8			PRO	92120903	ø 255 x 10 x 51.6
					TPM0008					TPM0008	
		16300	Ate		2358701	[+] 23587 20.3		Luc		2355402	[–] 23554 17.2
1.8 T	08/06→08/12	110 / 150									
1.8 TFSI	11/06→08/12	118 / 160	Ate	epad	2358781	[+] 23587 20.3		Luc	epad	2355481	[–] 23554 17.2
2.0	06/06→08/12	120 / 163									
2.0 TDI	05/03→08/12	100 / 136	Ate		82076800			Bos		2456301	[–] 24563 17.7
2.0 TDI	06/06→06/08	120 / 163		PRO	92120503	ø 312 x 25 x 49.7	PR 1ZD,1LJ	Luc		2391401	[o] 23914 17.2
				PRO	92120803	ø 288 x 25 x 49.8	PR 1ZE,1ZP	Luc	epad	2391481	[o] 23914 17.2
				PRO	92120805	ø 288 x 25 x 49.8	PR 1ZE,1ZP	Luc		82037300	
					TPM0008			Bos		82054300	
								Luc		82509000	
								Luc		82063300	
									PRO	92120903	ø 255 x 10 x 51.6
									PRO	92121103	ø 256 x 12 x 48.4
									PRO	92224903	ø 272 x 10 x 48.3
										TPM0008	
		16400	Ate		2313101	[+] 23131 19.7	Ø 280 mm	Luc		2355402	[–] 23554 17.2
1.9 TDI	05/03→05/10	77 / 105	Ate	epad	2313181	[+] 23131 19.7	Ø 280 mm	Luc	epad	2355481	[–] 23554 17.2
			Ate		2358701	[+] 23587 20.3	Ø 288 mm	Luc		82037300	
			Ate	epad	2358781	[+] 23587 20.3	Ø 288 mm	Luc		82063300	
			Ate		82062900				PRO	92120903	ø 255 x 10 x 51.6

→

30 kW / hp

A3 (8P1) 05/03→08/12

1.9 TDI	05/03→05/10	16400 77 / 105	Ate		82076800		Ø 288 mm		TPM0008		
				PRO	92120703	ø 280 x 22 x 49.9	PR 1ZF, 1ZC, 1ZM				
				PRO	92120705	ø 280 x 22 x 49.9	PR 1ZF, 1ZC, 1ZM				
				PRO	92120803	ø 288 x 25 x 49.8	PR 1ZE, 1ZP				
				PRO	92120805	ø 288 x 25 x 49.8	PR 1ZE, 1ZP				
					TPM0008						
2.0 TDI	03/06→08/12	16500 125 / 170	Ate		2358701	[+] 23587 20.3		Luc	2355402	[–] 23554 17.2	PR 1KD
			Ate	epad	2358781	[+] 23587 20.3		Luc	epad 2355481	[–] 23554 17.2	PR 1KD
			Ate		82062900			Bos	2456301	[–] 24563 17.7	PR 1KS
			Ate		82076800			Luc	2391401	[o] 23914 17.2	PR 1KZ
				PRO	92120503	ø 312 x 25 x 49.7		Luc	epad 2391481	[o] 23914 17.2	PR 1KZ
					TPM0008			Bos	82054300		PR 1KS
								Luc	82509000		⊕ J PR 1KZ
									PRO 92120903	ø 255 x 10 x 51.6	PR 1KD
									PRO 92140803	ø 282 x 12 x 48.5	PR 1KZ,1KJ
									PRO 92224903	ø 272 x 10 x 48.3	PR 1KS
									TPM0008		
2.0 TDI 16V	05/03→08/12	16600 103 / 140	Ate		2358701	[+] 23587 20.3		Luc	2355402	[–] 23554 17.2	
			Ate	epad	2358781	[+] 23587 20.3		Luc	epad 2355481	[–] 23554 17.2	
			Ate		82076800			Luc	2391401	[o] 23914 17.2	⊕ IRL ⊕ GB ⊕ J
				PRO	92120503	ø 312 x 25 x 49.7	PR 1ZD,1LJ	Luc	epad 2391481	[o] 23914 17.2	⊕ IRL ⊕ GB ⊕ J
				PRO	92120803	ø 288 x 25 x 49.8	PR 1ZE,1ZP	Luc	82037300		
				PRO	92120805	ø 288 x 25 x 49.8	PR 1ZE,1ZP	Luc	82509000		⊕ GB ⊕ IRL ⊕ J
					TPM0008			Luc	82063300		
									PRO 92120903	ø 255 x 10 x 51.6	
									TPM0008		
2.0 TDI 16V quattro	08/04→08/12	16700 103 / 140	Ate		2358701	[+] 23587 20.3		Luc	2391401	[o] 23914 17.2	
			Ate	epad	2358781	[+] 23587 20.3		Luc	epad 2391481	[o] 23914 17.2	
			Ate		82062900			Luc	82509000		
			Ate		82076800				PRO 92121103	ø 256 x 12 x 48.4	PR 1KF
				PRO	92120503	ø 312 x 25 x 49.7	PR 1ZD,1LJ		PRO 92140803	ø 282 x 12 x 48.5	PR 1KZ
				PRO	92120803	ø 288 x 25 x 49.8	PR 1ZE,1ZP		TPM0008		
				PRO	92120805	ø 288 x 25 x 49.8	PR 1ZE,1ZP				
					TPM0008						
2.0 TDI quattro	05/03→06/08	16800 100 / 136	Ate		2358701	[+] 23587 20.3		Luc	2355402	[–] 23554 17.2	
			Ate	epad	2358781	[+] 23587 20.3		Luc	epad 2355481	[–] 23554 17.2	
			Ate		82062900			Luc	82037300		Ø 255 mm
			Ate		82076800			Luc	82063300		
				PRO	92120803	ø 288 x 25 x 49.8			PRO 92120903	ø 255 x 10 x 51.6	
				PRO	92120805	ø 288 x 25 x 49.8			TPM0008		

AUDI

AUDI

		kW / hp										
A3 (8P1) 05/03→08/12												
		16800			TPM0008							
2.0 TDI quattro	05/03→06/08	100 / 136										
		16900	Ate		2358701	[+] 23587 20.3		Luc		2355402	[–] 23554 17.2	PR 1KQ,1KD Ø 255 mm
2.0 TDI quattro	01/06→06/08	103 / 140	Ate	epad	2358781	[+] 23587 20.3		Luc	epad	2355481	[–] 23554 17.2	PR 1KQ,1KD Ø 255 mm
			Ate		82062900			Luc		2391401	[o] 23914 17.2	PR 1KE,1KF ⊕ J
			Ate		82076800			Luc	epad	2391481	[o] 23914 17.2	PR 1KE,1KF ⊕ J
				PRO	92120503	ø 312 x 25 x 49.7	PR 1ZD,1LJ	Luc		82037300		PR 1KQ,1KD
				PRO	92120803	ø 288 x 25 x 49.8	PR 1ZE,1ZP	Luc		82509000		PR 1KE,1KF ⊕ J
				PRO	92120805	ø 288 x 25 x 49.8	PR 1ZE,1ZP	Luc		82063300		
					TPM0008				PRO	92120903	ø 255 x 10 x 51.6	PR 1KQ,1KD
									PRO	92121103	ø 256 x 12 x 48.4	PR 1KE,1KF
									PRO	92140803	ø 282 x 12 x 48.5	PR 1KZ
										TPM0008		
		17000	Ate		2358701	[+] 23587 20.3		Luc		2391401	[o] 23914 17.2	
2.0 TDI quattro	03/06→08/12	125 / 170	Ate	epad	2358781	[+] 23587 20.3		Luc	epad	2391481	[o] 23914 17.2	
			Ate		82062900			Luc		82509000		
			Ate		82076800				PRO	92121103	ø 256 x 12 x 48.4	
				PRO	92120503	ø 312 x 25 x 49.7				TPM0008		
					TPM0008							
		17100	Ate		2358701	[+] 23587 20.3		Luc		2391401	[o] 23914 17.2	
2.0 TFSI	09/04→08/12	147 / 200										
2.0 TFSI quattro	09/04→08/12	147 / 200	Ate	epad	2358781	[+] 23587 20.3		Luc	epad	2391481	[o] 23914 17.2	
			Ate		82062900			Luc		82509000		
			Ate		82076800				PRO	92140803	ø 282 x 12 x 48.5	
				PRO	92120503	ø 312 x 25 x 49.7				TPM0008		
					TPM0008							
		17200	Ate		2380101	[+] 23801 20.3		Luc		2391402	[o] 23914 17.2	
3.2 quattro	09/05→12/09	186 / 253										
3.2 V6 quattro	07/03→05/09	184 / 250	Ate	epad	2380181	[+] 23801 20.3		Luc	epad	2391482	[o] 23914 17.2	
			Ate		82062900			Luc		82502000		
			Ate		82071800			Luc		82063300		
				PRO	92120603	ø 345 x 30 x 49.9			PRO	92140703	ø 310 x 22 x 48.5	
					TPM0008					TPM0008		
		17300	Ate		2391301	[+] 23913 20.3		Luc		2391402	[o] 23914 17.2	
S3 quattro	11/06→08/12	195 / 265										
S3 quattro	02/07→08/12	188 / 256	Ate		82062900			Luc	epad	2391482	[o] 23914 17.2	
				PRO	92120603	ø 345 x 30 x 49.9		Luc		82502000		
					TPM0008			Luc		82063300		
									PRO	92140703	ø 310 x 22 x 48.5	
										TPM0008		
A3 (8V1) 04/12→												
		17400	TRW		2568301	[+] 25683 20.3		Ate		2500801	[–] 25008 16.4	
1.2 TFSI	02/13→	77 / 105										
1.4 TFSI	04/12→	90 / 122		PRO	92120803	ø 288 x 25 x 49.8		Ate		82503500		PR 1KE
1.4 TFSI	03/13→	103 / 140										
1.6 TDI	10/12→	77 / 105		PRO	92120805	ø 288 x 25 x 49.8			PRO	92224903	ø 272 x 10 x 48.3	
2.0 TDI	04/12→	110 / 150										
2.0 TDI	09/12→	105 / 143										
2.0 TDI	01/13→	81 / 110										
2.0 TDI	05/13→	100 / 136										

→

		kW / hp										
A3 (8V1) 04/12→												
2.0 TDI quattro	10/12→	110 / 150			TPM0008					TPM0008		
		17500	TRW		2473801	[+] 24738 20	PR 1LC,1LJ	Ate		2500801	[–] 25008 16.4	PR 1KE
1.2 TFSI	05/14→	81 / 110										
1.4 TFSI	05/14→	92 / 125	TRW		2568301	[+] 25683 20.3	PR 1ZE,1ZA,1ZD	Ate		2500901	[–] 25009 16.4	PR 1KY,1KJ
1.4 TFSI	05/14→	110 / 150										
S3 quattro	05/14→	210 / 286		PRO	92120503	ø 312 x 25 x 49.7	PR 1ZA,1ZD	Ate		82503500		
				PRO	92120803	ø 288 x 25 x 49.8	PR 1ZE		PRO	92224903	ø 272 x 10 x 48.3	PR 1KE
				PRO	92120805	ø 288 x 25 x 49.8	PR 1ZE		PRO	92140703	ø 310 x 22 x 48.5	PR 1KY,1KJ
				PRO	92229803	ø 340 x 30 x 49.7	PR 1LC,1LJ			TPM0008		
					TPM0008							
		17600	TRW		2568301	[+] 25683 20.3	PR 1ZE,1ZP,1ZD,1ZA	Ate		2500801	[–] 25008 16.4	PR 1KE
1.6 TDI	09/13→	81 / 110		PRO	92120503	ø 312 x 25 x 49.7	PR 1ZA,1ZD	Ate		2500901	[–] 25009 16.4	PR 1KY,1KJ
				PRO	92120803	ø 288 x 25 x 49.8	PR 1ZE,1ZP	Ate		82503500		
				PRO	92120805	ø 288 x 25 x 49.8	PR 1ZE,1ZP		PRO	92224903	ø 272 x 10 x 48.3	PR 1KE
				PRO	92229803	ø 340 x 30 x 49.7	PR 1LJ,1LC		PRO	92140703	ø 310 x 22 x 48.5	PR 1KY,1KJ
					TPM0008					TPM0008		
		17700	TRW		2568301	[+] 25683 20.3		Ate		2500801	[–] 25008 16.4	
1.8 TFSI	04/12→	132 / 180		PRO	92120503	ø 312 x 25 x 49.7		Ate		82503500		PR 1KE
1.8 TFSI quattro	08/12→	132 / 180										
2.0 TDI	05/13→	135 / 184			TPM0008				PRO	92224903	ø 272 x 10 x 48.3	
2.0 TDI quattro	12/12→	135 / 184								TPM0008		
		17800	TRW		2473801	[+] 24738 20		Ate		2500901	[–] 25009 16.4	
S3 quattro	11/12→	221 / 300		PRO	92229803	ø 340 x 30 x 49.7		Ate		82503500		
S3 quattro	02/13→	206 / 280			TPM0008				PRO	92140703	ø 310 x 22 x 48.5	
										TPM0008		
A3 Cabriolet (8P7) 04/08→05/13 → A3 Convertible (8P7), Page 25												
A3 Cabriolet (8V7) 10/13→ → A3 Convertible (8V7), Page 26												
A3 Convertible (8P7) 04/08→05/13												
		17900	Ate		2313101	[+] 23131 19.7		Luc		2355402	[–] 23554 17.2	
1.2 TFSI	03/10→05/13	77 / 105										
1.6	09/08→05/10	75 / 102	Ate	epad	2313181	[+] 23131 19.7		Luc	epad	2355481	[–] 23554 17.2	
1.6 TDI	05/09→05/13	77 / 105										
1.9 TDI	04/08→10/09	77 / 105	Ate		82062900			Luc		82037300		
				PRO	92120703	ø 280 x 22 x 49.9		Luc		82063300		
				PRO	92120705	ø 280 x 22 x 49.9			PRO	92120903	ø 255 x 10 x 51.6	
					TPM0008					TPM0008		
		18000	Ate		2358701	[+] 23587 20.3		Luc		2355402	[–] 23554 17.2	
1.4 TFSI	02/11→05/13	92 / 125										
1.8 TFSI	04/08→05/13	118 / 160	Ate	epad	2358781	[+] 23587 20.3		Luc	epad	2355481	[–] 23554 17.2	
2.0 TDI	04/08→05/13	100 / 136										
2.0 TDI	04/08→05/13	103 / 140	Ate		82062900			Luc		82037300		
			Ate		82076800			Luc		82063300		
				PRO	92120803	ø 288 x 25 x 49.8			PRO	92120903	ø 255 x 10 x 51.6	
				PRO	92120805	ø 288 x 25 x 49.8				TPM0008		
					TPM0008							
		18100	Ate		2358701	[+] 23587 20.3		Bos		2456301	[–] 24563 17.7	
2.0 TFSI	04/08→05/13	147 / 200										
			Ate	epad	2358781	[+] 23587 20.3		Bos		82054300		
			Ate		82062900				PRO	92224903	ø 272 x 10 x 48.3	

AUDI

AUDI

		kW / hp									
A3 Convertible (8P7) 04/08→05/13											
		18100	Ate	82076800				TPM0008			
2.0 TFSI	04/08→05/13	147 / 200	PRO	92120503	ø 312 x 25 x 49.7						
				TPM0008							
A3 Convertible (8V7) 10/13→											
		18200	TRW	2568301	[+] 25683 20.3		Ate	2500801	[–] 25008 16.4		
1.4 TFSI	10/13→	103 / 140	PRO	92120503	ø 312 x 25 x 49.7	PR 1ZA,1ZD	Ate	82503500			
1.4 TFSI	02/14→	92 / 125	PRO	92120803	ø 288 x 25 x 49.8	PR 1ZE	PRO	92224903	ø 272 x 10 x 48.3		
1.6 TDI	02/14→	81 / 110	PRO	92120805	ø 288 x 25 x 49.8	PR 1ZE		TPM0008			
1.8 TFSI	10/13→	132 / 180		TPM0008							
1.8 TFSI quattro	03/14→	132 / 180									
2.0 TDI	10/13→	110 / 150									
2.0 TDI quattro	03/14→	110 / 150									
		18300	TRW	2473801	[+] 24738 20	PR 1LC,1LJ	Ate	2500801	[–] 25008 16.4	PR 1KE	
1.4 TFSI	05/14→	110 / 150	TRW	2568301	[+] 25683 20.3	PR 1ZE,1ZA,1ZD	Ate	2500901	[–] 25009 16.4	PR 1KY,1KJ	
1.8 TFSI	05/14→	125 / 170	PRO	92120503	ø 312 x 25 x 49.7	PR 1ZA,1ZD	Ate	82503500			
2.0 TDI	10/13→	100 / 136	PRO	92120803	ø 288 x 25 x 49.8	PR 1ZE	PRO	92224903	ø 272 x 10 x 48.3	PR 1KE	
2.0 TDI	05/14→	135 / 184	PRO	92120805	ø 288 x 25 x 49.8	PR 1ZE	PRO	92140703	ø 310 x 22 x 48.5	PR 1KY,1KJ	
2.0 TDI quattro	05/14→	135 / 184	PRO	92229803	ø 340 x 30 x 49.7	PR 1LC,1LJ		TPM0008			
S3 quattro	03/14→	210 / 286		TPM0008							
		18400	TRW	2473801	[+] 24738 20		Ate	2500901	[–] 25009 16.4		
S3 quattro	04/14→	221 / 300		98050800	L170		Ate	82503500			
			PRO	92229803	ø 340 x 30 x 49.7		PRO	92140703	ø 310 x 22 x 48.5		
				TPM0008				TPM0008			
A3 Limousine (8VS) 05/13→											
		18500	TRW	2568301	[+] 25683 20.3		Ate	2500801	[–] 25008 16.4		
1.2 TFSI	10/13→	77 / 105	PRO	92120803	ø 288 x 25 x 49.8		Ate	82503500		PR 1KE	
1.4 TFSI	05/13→	103 / 140	PRO	92120805	ø 288 x 25 x 49.8		PRO	92224903	ø 272 x 10 x 48.3		
2.0 TDI	05/13→	81 / 110		TPM0008				TPM0008			
2.0 TDI	05/13→	110 / 150									
2.0 TDI	09/13→	100 / 136									
2.0 TDI	10/13→	105 / 143									
		18600	TRW	2473801	[+] 24738 20	PR 1LC,1LJ	Ate	2500801	[–] 25008 16.4	PR 1KE	
1.2 TFSI	05/14→	81 / 110	TRW	2568301	[+] 25683 20.3	PR 1ZE,1ZA,1ZD	Ate	2500901	[–] 25009 16.4	PR 1KY,1KJ	
1.4 TFSI	05/14→	110 / 150	PRO	92120503	ø 312 x 25 x 49.7	PR 1ZA,1ZD	Ate	82503500			
1.6 TDI	05/14→	81 / 110	PRO	92120803	ø 288 x 25 x 49.8	PR 1ZE	PRO	92224903	ø 272 x 10 x 48.3	PR 1KE	
S3 quattro	05/14→	210 / 286	PRO	92120805	ø 288 x 25 x 49.8	PR 1ZE	PRO	92140703	ø 310 x 22 x 48.5	PR 1KY,1KJ	
			PRO	92229803	ø 340 x 30 x 49.7	PR 1LC,1LJ		TPM0008			
				TPM0008							
		18700	TRW	2568301	[+] 25683 20.3	PR 1ZE,1ZP,1ZD,1ZA	Ate	2500801	[–] 25008 16.4	PR 1KE	
1.4 TFSI	09/13→	90 / 122	PRO	92120503	ø 312 x 25 x 49.7	PR 1ZA,1ZD	Ate	2500901	[–] 25009 16.4	PR 1KY,1KJ	
1.4 TFSI	09/13→	92 / 125	PRO	92120803	ø 288 x 25 x 49.8	PR 1ZE,1ZP	Ate	82503500			
1.6 TDI	09/13→	77 / 105	PRO	92120805	ø 288 x 25 x 49.8	PR 1ZE,1ZP	PRO	92224903	ø 272 x 10 x 48.3	PR 1KE	
1.8 TFSI quattro	11/13→	132 / 180	PRO	92229803	ø 340 x 30 x 49.7	PR 1LJ,1LC	PRO	92140703	ø 310 x 22 x 48.5	PR 1KY,1KJ	
2.0 TDI quattro	10/13→	110 / 150		TPM0008				TPM0008			
S3 quattro	10/13→	206 / 280									
S3 quattro	10/13→	221 / 300									
		18800	TRW	2568301	[+] 25683 20.3		Ate	2500801	[–] 25008 16.4		
1.8 TFSI	05/13→	132 / 180	PRO	92120503	ø 312 x 25 x 49.7		Ate	82503500		PR 1KE	

→

		kW / hp											
A3 Limousine (8VS) 05/13→													
		18800			TPM0008					92224903	ø 272 x 10 x 48.3	
1.8 TFSI	05/13→	132 / 180								TPM0008		
		18900	TRW		2568301	[+] 25683 20.3		Ate		2500801	[–] 25008 16.4	
1.8 TFSI	11/13→	125 / 170			92120503	ø 312 x 25 x 49.7		Ate		82503500		
					TPM0008					92224903	ø 272 x 10 x 48.3	
										TPM0008		
		19000	TRW		2568301	[+] 25683 20.3		Ate		2500801	[–] 25008 16.4	
2.0 TDI	05/14→	135 / 184			98050800	L170		Ate		82503500		
2.0 TDI quattro	05/14→	135 / 184			92120503	ø 312 x 25 x 49.7				92224903	ø 272 x 10 x 48.3	
					TPM0008					TPM0008		
A3 Sportback (8PA) 09/04→03/13													
		19100	Ate		2313101	[+] 23131 19.7		Luc		2355402	[–] 23554 17.2	
1.2 TSI	04/10→03/13	77 / 105										
1.6	09/04→03/13	75 / 102	Ate		2313181	[+] 23131 19.7		Luc		2355481	[–] 23554 17.2	
1.6 E-Power	01/11→03/13	75 / 102										
1.6 FSI	09/04→09/07	85 / 115										
1.6 TDI	05/09→03/13	66 / 90	Ate		82062900			Luc		82037300		
1.6 TDI	05/09→03/13	77 / 105			92120703	ø 280 x 22 x 49.9		Luc		82063300		
					92120705	ø 280 x 22 x 49.9				92120903	ø 255 x 10 x 51.6	
					TPM0008					TPM0008		
		19200	Ate		2358701	[+] 23587 20.3		Luc		2355402	[–] 23554 17.2	
1.4 TFSI	09/07→03/13	92 / 125										
1.8 TFSI quattro	07/08→03/13	118 / 160	Ate		2358781	[+] 23587 20.3		Luc		2355481	[–] 23554 17.2	
2.0 FSI	09/04→06/08	110 / 150										
2.0 TDI	06/05→06/08	103 / 140	Ate		82062900			Luc		82037300		
			Ate		82076800			Luc		82063300		
					92120803	ø 288 x 25 x 49.8				92120903	ø 255 x 10 x 51.6	
					92120805	ø 288 x 25 x 49.8				TPM0008		
					TPM0008							
		19300	Ate		2358701	[+] 23587 20.3		Luc		2355402	[–] 23554 17.2	
1.8 TFSI	11/06→03/13	118 / 160										
2.0	06/06→03/13	120 / 163	Ate		2358781	[+] 23587 20.3		Luc		2355481	[–] 23554 17.2	
2.0 TDI	09/04→03/13	100 / 136										
2.0 TDI	06/06→06/08	120 / 163	Ate		82076800			Luc		82037300		
2.0 TDI 16V	09/04→03/13	103 / 140			92120803	ø 288 x 25 x 49.8		Luc		82063300		
					92120805	ø 288 x 25 x 49.8				92120903	ø 255 x 10 x 51.6	
					TPM0008					TPM0008		
		19400	Ate		2313101	[+] 23131 19.7	Ø 280 mm	Luc		2355402	[–] 23554 17.2	
1.9 TDI	09/04→05/10	77 / 105										
			Ate		2313181	[+] 23131 19.7	Ø 280 mm	Luc		2355481	[–] 23554 17.2	
			Ate		2358701	[+] 23587 20.3	Ø 288 mm	Luc		82037300		
			Ate		2358781	[+] 23587 20.3	Ø 288 mm	Luc		82063300		
			Ate		82062900					92120903	ø 255 x 10 x 51.6	
			Ate		82076800		Ø 288 mm			TPM0008		
					92120703	ø 280 x 22 x 49.9	PR 1ZF, 1ZC, 1ZM					
					92120705	ø 280 x 22 x 49.9	PR 1ZF, 1ZC, 1ZM					
					92120803	ø 288 x 25 x 49.8	PR 1ZE, 1ZP					
					92120805	ø 288 x 25 x 49.8	PR 1ZE, 1ZP					

AUDI

AUDI

30 kW / hp

A3 Sportback (8PA) 09/04→03/13

1.9 TDI	09/04→05/10	19400 77 / 105			TPM0008									
2.0 TDI	03/06→03/13	19500 125 / 170	Ate		2358701	[+] 23587 20.3		Luc		2355402	[–] 23554 17.2	PR 1KD
			Ate	epad	2358781	[+] 23587 20.3		Luc	epad	2355481	[–] 23554 17.2	PR 1KD
			Ate		82062900			Bos		2456301	[–] 24563 17.7	PR 1KS
			Ate		82076800			Luc		2391401	[o] 23914 17.2	PR 1KZ
				PRO	92120503	ø 312 x 25 x 49.7		Luc	epad	2391481	[o] 23914 17.2	PR 1KZ
					TPM0008			Bos		82054300		PR 1KS
								Luc		82509000		⊕ J PR 1KZ
									PRO	92120903	ø 255 x 10 x 51.6	PR 1KD
									PRO	92140803	ø 282 x 12 x 48.5	PR 1KZ,1KJ
									PRO	92224903	ø 272 x 10 x 48.3	PR 1KS
										TPM0008		
2.0 TDI 16V quattro	11/05→03/13	19600 103 / 140	Ate		2358701	[+] 23587 20.3		Luc		2355402	[–] 23554 17.2	PR 1KQ,1KD Ø 255 mm
			Ate	epad	2358781	[+] 23587 20.3		Luc	epad	2355481	[–] 23554 17.2	PR 1KQ,1KD Ø 255 mm
			Ate		82062900			Bos		2456301	[–] 24563 17.7	PR 1KS Ø 272 mm
			Ate		82076800			Luc		82037300		PR 1KQ,1KD
				PRO	92120503	ø 312 x 25 x 49.7	PR 1LJ, 1ZA	Luc		82063300		
				PRO	92120803	ø 288 x 25 x 49.8	PR 1ZE,1ZP		PRO	92120903	ø 255 x 10 x 51.6	PR 1KQ,1KD
				PRO	92120805	ø 288 x 25 x 49.8	PR 1ZE,1ZP		PRO	92224903	ø 272 x 10 x 48.3	PR 1KS
					TPM0008					TPM0008		
2.0 TDI quattro	01/06→06/08	19700 103 / 140	Ate		2358701	[+] 23587 20.3		Luc		2391401	[o] 23914 17.2	⊕ J
			Ate	epad	2358781	[+] 23587 20.3		Luc	epad	2391481	[o] 23914 17.2	⊕ J
			Ate		82062900			Luc		82509000		⊕ J
			Ate		82076800					TPM0008		
				PRO	92120503	ø 312 x 25 x 49.7						
					TPM0008							
2.0 TDI quattro	03/06→03/13	19800 125 / 170	Ate		2358701	[+] 23587 20.3		Luc		2391401	[o] 23914 17.2	
			Ate	epad	2358781	[+] 23587 20.3		Luc	epad	2391481	[o] 23914 17.2	
			Ate		82062900			Luc		82509000		⊕ J
			Ate		82076800				PRO	92140803	ø 282 x 12 x 48.5	
				PRO	92120503	ø 312 x 25 x 49.7				TPM0008		
					TPM0008							
2.0 TFSI	09/04→03/13	19900 147 / 200	Ate		2358701	[+] 23587 20.3		Bos		2456301	[–] 24563 17.7	
			Ate	epad	2358781	[+] 23587 20.3		Bos		82054300		
			Ate		82062900				PRO	92224903	ø 272 x 10 x 48.3	
			Ate		82076800					TPM0008		
				PRO	92120503	ø 312 x 25 x 49.7						
					TPM0008							
2.0 TFSI quattro	09/04→03/13	20000 147 / 200	Ate		2358701	[+] 23587 20.3		Luc		2391401	[o] 23914 17.2	⊕ CN ⊕ RUS ⊕ J
			Ate	epad	2358781	[+] 23587 20.3		Luc	epad	2391481	[o] 23914 17.2	⊕ CN ⊕ RUS ⊕ J

→

		kW / hp										
A3 Sportback (8PA) 09/04→03/13												
		20000	Ate		82076800					TPM0008		
2.0 TFSI quattro	09/04→03/13	147 / 200		PRO	92120503	ø 312 x 25 x 49.7						
					TPM0008							
		20100	Ate		2380101	[+] 23801 20.3		Luc		2391402	[o] 23914 17.2	
3.2 V6 quattro	09/04→05/09	184 / 250	Ate	epad	2380181	[+] 23801 20.3		Luc	epad	2391482	[o] 23914 17.2	
			Ate		82062900			Luc		82502000		
			Ate		82071800			Luc		82063300		
				PRO	92120603	ø 345 x 30 x 49.9			PRO	92140703	ø 310 x 22 x 48.5	
					TPM0008					TPM0008		
		20200	Bre		2409803	[o] 24098 16		Luc		2391402	[o] 23914 17.2	
RS3 quattro	01/11→12/12	250 / 340			98042300	L370		Luc	epad	2391482	[o] 23914 17.2	
					TPM0008			Luc		82502000		
									PRO	92140703	ø 310 x 22 x 48.5	
										TPM0008		
		20300	Ate		2391301	[+] 23913 20.3		Luc		2391402	[o] 23914 17.2	
S3 quattro	06/08→03/13	195 / 265	Ate		82062900			Luc	epad	2391482	[o] 23914 17.2	
S3 quattro	07/08→03/13	188 / 256		PRO	92120603	ø 345 x 30 x 49.9		Luc		82502000		
					TPM0008			Luc		82063300		
									PRO	92140703	ø 310 x 22 x 48.5	
										TPM0008		
A3 Sportback (8VA) 09/12→												
		20400	TRW		2568301	[+] 25683 20.3		Ate		2500801	[–] 25008 16.4	
1.2 TFSI	05/13→	77 / 105		PRO	92120803	ø 288 x 25 x 49.8		Ate		82503500		PR 1KE
1.4 TFSI	09/12→	90 / 122										
1.4 TFSI	03/13→	103 / 140										
1.6 TDI	10/12→	77 / 105		PRO	92120805	ø 288 x 25 x 49.8			PRO	92224903	ø 272 x 10 x 48.3	
2.0 TDI	09/12→	110 / 150										
2.0 TDI	03/13→	105 / 143										
2.0 TDI	05/13→	81 / 110										
2.0 TDI	05/13→	100 / 136			TPM0008					TPM0008		
2.0 TDI quattro	02/13→	110 / 150										
		20500	TRW		2473801	[+] 24738 20	PR 1LC,1LJ	Ate		2500801	[–] 25008 16.4	PR 1KE
1.2 TFSI	05/14→	81 / 110										
1.4 TFSI	05/14→	92 / 125	TRW		2568301	[+] 25683 20.3	PR 1ZE,1ZA,1ZD	Ate		2500901	[–] 25009 16.4	PR 1KY,1KJ
1.4 TFSI	05/14→	110 / 150										
1.4 TFSI e-tron	05/14→	110 / 150		PRO	92120503	ø 312 x 25 x 49.7	PR 1ZA,1ZD	Ate		82503500		
S3 quattro	05/14→	210 / 286		PRO	92120803	ø 288 x 25 x 49.8	PR 1ZE		PRO	92224903	ø 272 x 10 x 48.3	PR 1KE
				PRO	92120805	ø 288 x 25 x 49.8	PR 1ZE		PRO	92140703	ø 310 x 22 x 48.5	PR 1KY,1KJ
				PRO	92229803	ø 340 x 30 x 49.7	PR 1LC,1LJ			TPM0008		
					TPM0008							
		20600	TRW		2568301	[+] 25683 20.3	PR 1ZE,1ZP,1ZD,1ZA	Ate		2500801	[–] 25008 16.4	PR 1KE
1.4 TFSI g-tron	11/13→	81 / 110		PRO	92120503	ø 312 x 25 x 49.7	PR 1ZA,1ZD	Ate		2500901	[–] 25009 16.4	PR 1KY,1KJ
1.6 TDI	09/13→	81 / 110		PRO	92120803	ø 288 x 25 x 49.8	PR 1ZE,1ZP	Ate		82503500		
				PRO	92120805	ø 288 x 25 x 49.8	PR 1ZE,1ZP		PRO	92224903	ø 272 x 10 x 48.3	PR 1KE
				PRO	92229803	ø 340 x 30 x 49.7	PR 1LJ,1LC		PRO	92140703	ø 310 x 22 x 48.5	PR 1KY,1KJ
					TPM0008					TPM0008		
		20700	TRW		2568301	[+] 25683 20.3		Ate		2500801	[–] 25008 16.4	
1.8 TFSI	09/12→	132 / 180										
1.8 TFSI quattro	05/13→	132 / 180		PRO	92120503	ø 312 x 25 x 49.7		Ate		82503500		PR 1KE
2.0 TDI	05/13→	135 / 184										
2.0 TDI quattro	05/13→	135 / 184										

AUDI

AUDI

		kW / hp											
A3 Sportback (8VA) 09/12→													
		20700											
1.8 TFSI	09/12→	132 / 180											
1.8 TFSI quattro	05/13→	132 / 180											
2.0 TDI	05/13→	135 / 184											
2.0 TDI quattro	05/13→	135 / 184											
					TPM0008						TPM0008		
		20800	TRW		2473801	[+] 24738 20		Ate		2500901	[–] 25009 16.4		
S3 quattro	11/12→	221 / 300		PRO	92229803	ø 340 x 30 x 49.7		Ate		82503500			
S3 quattro	05/13→	206 / 280			TPM0008				PRO	92140703	ø 310 x 22 x 48.5		
										TPM0008			
A4 (8D2, B5) 11/94→09/01													
		20900	Luc		2066921	[–] 20669 19.6	→8D-V-169695	Luc		2114401	[–] 21144 16.6	→8D-V-168350	
1.6	11/94→10/00	74 / 100	Luc		2194503	[–] 21945 19.6	8D-V-169696→ →8D-X-199999	Luc		2355402	[–] 23554 17.2	8D-V-168351→	
			Luc		2194504	[+] 21945 19.6	8D-X-200001→	Luc	epad	2355481	[–] 23554 17.2	8D-V-168351→	
			Luc		82062800			Luc		82062800			
				PRO	92071603	ø 280 x 13 x 46.2	→8D-V-169695		PRO	92072103	ø 245 x 10 x 83.6		
				PRO	92057603	ø 288 x 25 x 46.2	8D-V-169696→		PRO	92154303	ø 245 x 10 x 83.6		
				PRO	92057605	ø 288 x 25 x 46.2	8D-V-169696→		PRO	92174203	ø 256 x 22 x 48	PR 1KE	
				PRO	92083503	ø 280 x 22 x 46.2	8D-V-169696→						
				PRO	92083505	ø 280 x 22 x 46.2	8D-V-169696→						
		21000	Luc		2066921	[–] 20669 19.6	→8D-V-169695	Luc		2114401	[–] 21144 16.6	→8D-V-168350	
1.6	07/00→11/00	75 / 102	Luc		2194503	[–] 21945 19.6	8D-V-169696→ →8D-X-199999	Luc		2355402	[–] 23554 17.2	8D-V-168351→	
1.9 TDI	01/95→11/00	66 / 90											
1.9 TDI	12/95→11/00	55 / 75	Luc		2194504	[+] 21945 19.6	8D-X-200001→	Luc	epad	2355481	[–] 23554 17.2	8D-V-168351→	
			Luc		82062800			Luc		82062800			
				PRO	92071603	ø 280 x 13 x 46.2	→8D-V-169695		PRO	92072103	ø 245 x 10 x 83.6		
				PRO	92057603	ø 288 x 25 x 46.2	8D-V-169696→		PRO	92154303	ø 245 x 10 x 83.6		
				PRO	92057605	ø 288 x 25 x 46.2	8D-V-169696→						
				PRO	92083503	ø 280 x 22 x 46.2	8D-V-169696→						
				PRO	92083505	ø 280 x 22 x 46.2	8D-V-169696→						
		21100	Ate		2162402	[–] 21624 20.4	→8D-V-054061	Luc		2114401	[–] 21144 16.6	→8D-V-168350	
1.8	01/95→11/00	92 / 125											
1.8	01/95→11/00	95 / 129											
1.8	04/95→11/00	85 / 115	Luc		2194503	[–] 21945 19.6	8D-V-054062→ →8D-X-199999	Luc		2355402	[–] 23554 17.2	8D-V-168351→	
			Luc		2194504	[+] 21945 19.6	8D-X-200001→	Luc	epad	2355481	[–] 23554 17.2	8D-V-168351→	
			Ate		82029300		→8D-V-054061	Luc		82062800			
			Luc		82062800				PRO	92072103	ø 245 x 10 x 83.6		
			Ate		82062900		→8D-V-054061		PRO	92154303	ø 245 x 10 x 83.6		
				PRO	92057403	ø 288 x 15 x 46.2	→8D-V-054061						
				PRO	92057603	ø 288 x 25 x 46.2	8D-V-054062→						
				PRO	92057605	ø 288 x 25 x 46.2	8D-V-054062→						
				PRO	92083503	ø 280 x 22 x 46.2	8D-V-054062→						
				PRO	92083505	ø 280 x 22 x 46.2	8D-V-054062→						
		21200	Ate		2162402	[–] 21624 20.4	→8D-X-199999	Luc		2114401	[–] 21144 16.6	→8D-V-168350	
1.8	05/00→09/00	125 / 170											
1.8 T	01/95→11/00	110 / 150	Ate		2193801	[+] 21938 20.4	8D-X-200000→	Luc		2355402	[–] 23554 17.2	8D-V-168351→	
1.8 T	12/97→11/00	132 / 180											
1.9 TDI	10/95→11/00	81 / 110											
1.9 TDI	03/00→11/00	85 / 116	Ate	epad	2193881	[+] 21938 20.4	8D-X-200000→	Luc	epad	2355481	[–] 23554 17.2	8D-V-168351→	
2.4	03/97→11/00	121 / 165											
2.4	08/97→11/00	120 / 163											
2.5 TDI	09/97→11/00	110 / 150	Ate		82029300			Luc		82062800			
2.6	01/95→11/00	110 / 150											
2.8	10/96→07/99	142 / 193											

→

A4 (8D2, B5) 11/94→09/01

2.8	10/96→11/00	142 / 193	Ate		82062900					PRO	92072103	ø 245 x 10 x 83.6		
										PRO	92154303	ø 245 x 10 x 83.6		
		21300	Ate		2162402	[–] 21624	20.4	→8D-V-054061	Luc		2114401	[–] 21144	16.6	→8D-X-199999
1.8 quattro	01/95→11/00	92 / 125												8D-X-200001→ PR 1KD
1.8 quattro	07/95→11/00	85 / 115	Luc		2194503	[–] 21945	19.6	8D-V-054062→ →8D-X-199999	Luc		2355402	[–] 23554	17.2	8D-X-200001→ PR 1KE
			Luc		2194504	[+] 21945	19.6	8D-X-200001→	Luc	epad	2355481	[–] 23554	17.2	8D-X-200001→ PR 1KE
			Ate		82029300			→8D-V-054061	Luc		82062800			
			Luc		82062800					PRO	92088503	ø 245 x 10 x 48		PR 1KD
			Ate		82062900			→8D-V-054061		PRO	92174203	ø 256 x 22 x 48		PR 1KE
				PRO	92057403	ø 288 x 15 x 46.2		→8D-V-054061						
				PRO	92057603	ø 288 x 25 x 46.2		8D-V-054062→						
				PRO	92057605	ø 288 x 25 x 46.2		8D-V-054062→						
				PRO	92083503	ø 280 x 22 x 46.2		8D-V-054062→						
				PRO	92083505	ø 280 x 22 x 46.2		8D-V-054062→						
		21400	Ate		2162402	[–] 21624	20.4	→8D-X-199999	Luc		2114401	[–] 21144	16.6	→8D-X-199999
1.8 T quattro	01/95→11/00	110 / 150												8D-X-200001→ PR 1KD
1.8 T quattro	01/95→11/00	125 / 170	Ate		2193801	[+] 21938	20.4	8D-X-200001→	Luc		2355402	[–] 23554	17.2	8D-X-200001→ PR 1KE
			Ate	epad	2193881	[+] 21938	20.4	8D-X-200001→	Luc	epad	2355481	[–] 23554	17.2	8D-X-200001→ PR 1KE
			Ate		82029300					PRO	92088503	ø 245 x 10 x 48		PR 1KD
			Ate		82062900					PRO	92174203	ø 256 x 22 x 48		PR 1KE
		21500	Ate		2162402	[–] 21624	20.4	→8D-X-199999	Luc		2114401	[–] 21144	16.6	→8D-X-199999
1.8 T quattro	12/97→11/00	132 / 180												8D-X-200001→ PR 1KD
1.9 TDI quattro	09/96→11/00	81 / 110	Ate		2193801	[+] 21938	20.4	8D-X-200001→	Luc		2355402	[–] 23554	17.2	8D-X-200001→ PR 1KE
1.9 TDI quattro	03/00→11/00	85 / 116												
2.4 quattro	03/97→11/00	121 / 165												
2.4 quattro	08/97→11/00	120 / 163	Ate	epad	2193881	[+] 21938	20.4	8D-X-200001→	Luc	epad	2355481	[–] 23554	17.2	8D-X-200001→ PR 1KE
2.5 TDI quattro	09/97→11/00	110 / 150												
2.6 quattro	01/95→11/00	110 / 150												
2.8	09/99→10/00	140 / 190	Ate		82029300				Luc		82062800			
2.8 quattro	10/96→08/01	142 / 193												
2.8 quattro	09/99→10/00	140 / 190	Ate		82062900					PRO	92088503	ø 245 x 10 x 48		PR 1KD
										PRO	92174203	ø 256 x 22 x 48		PR 1KE
		21600	Luc		2145401	[+] 21454	18.5	→8D-1-200000	Luc		2355402	[–] 23554	17.2	
2.7 Turbo quattro	02/99→09/00	169 / 230												
			Ate		2376302	[+] 23763	20.3	8E-1-000001→	Luc	epad	2355481	[–] 23554	17.2	
			Ate	epad	2376381	[+] 23763	20.3	8E-1-000001→	Luc		82062800			
			Luc		82062800					PRO	92174203	ø 256 x 22 x 48		PR 1KE
			Ate		82062900			8E-1-000001→						
			Ate		82071800			8E-1-000001→						
				PRO	92106703	ø 320 x 30 x 46.5		→8D-1-200000						
				PRO	92106705	ø 320 x 30 x 46.5		→8D-1-200000						
		21700	Luc		2145401	[+] 21454	18.5	→8D-X-199999	Luc		2355402	[–] 23554	17.2	
S4 quattro	09/97→09/01	195 / 265	Luc		2328001	[+] 23280	18.3	8D-X-200000→ →8D-1-200000	Luc	epad	2355481	[–] 23554	17.2	
			Ate		2376302	[+] 23763	20.3	8E-1-000001→	Luc		82062800			
			Ate	epad	2376381	[+] 23763	20.3	8E-1-000001→		PRO	92088503	ø 245 x 10 x 48		PR 1KD
			Luc		82062800									
			Ate		82062900			8E-1-000001→						
			Ate		82071800			8E-1-000001→						
				PRO	92106703	ø 320 x 30 x 46.5		→8D-1-200000						

AUDI

AUDI

		kW / hp											
A4 (8D2, B5) 11/94→09/01													
		21700		PRO	92106705	ø 320 x 30 x 46.5	→8D-1-200000						
S4 quattro	09/97→09/01	195 / 265											
A4 (8E2, B6) 09/99→12/04													
		21800	Luc		2194504	[+] 21945 19.6		Luc		2355402	[–] 23554 17.2		
1.6	11/00→12/04	75 / 102											
1.9 TDI	05/01→12/04	74 / 101	Luc		82062800			Luc	epad	2355481	[–] 23554 17.2		
				PRO	92057603	ø 288 x 25 x 46.2		Luc		82037300			
				PRO	92057605	ø 288 x 25 x 46.2		Luc		82063300			
				PRO	92083503	ø 280 x 22 x 46.2			PRO	92106203	ø 245 x 10 x 39.9		
				PRO	92083505	ø 280 x 22 x 46.2							
		21900	Ate		2193801	[+] 21938 20.4	⊕ J	Luc		2355402	[–] 23554 17.2		
1.8 T	11/00→07/02	110 / 150											
1.8 T quattro	07/01→12/04	125 / 170	Ate	epad	2193881	[+] 21938 20.4	⊕ J	Luc	epad	2355481	[–] 23554 17.2		
1.9 TDI	11/00→12/04	96 / 130											
1.9 TDI quattro	11/01→12/04	96 / 130	Ate		2301802	[+] 23018 20.4		Luc		82037300			
2.0	11/00→12/04	96 / 130											
2.0 FSI	07/02→12/04	110 / 150	Ate	epad	2301881	[+] 23018 20.4		Luc		82063300			
			Ate		82029300				PRO	92106203	ø 245 x 10 x 39.9		
			Ate		82062900								
		22000	Ate		2301802	[+] 23018 20.4		Luc		2355402	[–] 23554 17.2		
1.8 T	07/01→12/04	125 / 170											
			Ate	epad	2301881	[+] 23018 20.4		Luc	epad	2355481	[–] 23554 17.2		
			Ate		82029300			Luc		82037300			
			Ate		82062900			Luc		82063300			
									PRO	92106203	ø 245 x 10 x 39.9		
		22100	Ate		2193801	[+] 21938 20.4	⊕ J	Luc		2355401	[–] 23554 15.2		
1.8 T	07/02→12/04	120 / 163											
1.8 T	11/02→12/04	140 / 190	Ate	epad	2193881	[+] 21938 20.4	⊕ J	Luc	epad	2355482	[–] 23554 15.2		
2.4	09/01→12/04	125 / 170											
2.5 TDI	07/02→12/04	120 / 163	Ate		2301802	[+] 23018 20.4		Luc		82037300			
2.5 TDI quattro	11/00→12/04	132 / 180											
3.0	11/00→12/04	162 / 220	Ate	epad	2301881	[+] 23018 20.4		Luc		82063300			
3.0 quattro	11/00→12/04	162 / 220											
			Ate		82029300				PRO	92106303	ø 255 x 12 x 39.9		
			Ate		82062900								
				PRO	92106103	ø 312 x 25 x 46.4							
				PRO	92106105	ø 312 x 25 x 46.4							
		22200	Ate		2193801	[+] 21938 20.4	⊕ J PR 1LB,1LE	Luc		2355402	[–] 23554 17.2		
1.8 T quattro	11/00→07/02	110 / 150											
1.9 TDI	06/04→12/04	85 / 116	Ate	epad	2193881	[+] 21938 20.4	⊕ J PR 1LB,1LE	Luc	epad	2355481	[–] 23554 17.2		
			Ate		2301802	[+] 23018 20.4	PR 1LF,1LT	Luc		82037300			
			Ate	epad	2301881	[+] 23018 20.4	PR 1LF,1LT	Luc		82063300			
			Ate		82029300				PRO	92106203	ø 245 x 10 x 39.9	→8E-2-400000 ⊕ 4 cyl. 8E-3-000001→ PR 1KD	
			Ate		82062900				PRO	92106303	ø 255 x 12 x 39.9	→8E-2-400000 ⊕ 6 cyl. 8E-3-000001→	
				PRO	92106103	ø 312 x 25 x 46.4	PR 1LT,1LF						
				PRO	92106105	ø 312 x 25 x 46.4	PR 1LT,1LF						
		22300	Ate		2193801	[+] 21938 20.4	⊕ J PR 1LB,1LE	Luc		2355402	[–] 23554 17.2		
1.8 T quattro	07/02→12/04	120 / 163											
1.8 T quattro	11/02→12/04	140 / 190	Ate	epad	2193881	[+] 21938 20.4	⊕ J PR 1LB,1LE	Luc	epad	2355481	[–] 23554 17.2		
2.4	09/01→12/04	120 / 163											
2.5 D	10/00→05/03	132 / 179	Ate		2301802	[+] 23018 20.4	PR 1LT,1LF	Luc		82037300			
2.5 TDI	08/01→07/02	114 / 155											
			Ate	epad	2301881	[+] 23018 20.4	PR 1LT,1LF	Luc		82063300			
			Ate		82029300				PRO	92106203	ø 245 x 10 x 39.9	→8E-2-400000 ⊕ 4 cyl. 8E-3-000001→ PR 1KD	

→

		kW / hp										
A4 (8E2, B6) 09/99→12/04												
		22300	Ate		82062900				PRO	92106303	ø 255 x 12 x 39.9	→8E-2-400000 ⊕ 6 cyl.
1.8 T quattro	07/02→12/04	120 / 163										8E-3-000001→
1.8 T quattro	11/02→12/04	140 / 190		PRO	92106103	ø 312 x 25 x 46.4	PR 1LT,1LF					
2.4	09/01→12/04	120 / 163		PRO	92106105	ø 312 x 25 x 46.4	PR 1LT,1LF					
2.5 D	10/00→05/03	132 / 179										
2.5 TDI	08/01→07/02	114 / 155										
		22400	Ate		2193801	[+] 21938 20.4	⊕ J PR 1LB,1LE	Luc		2355402	[–] 23554 17.2	
3.0	04/01→12/04	160 / 218										
3.0 quattro	04/01→12/04	160 / 218	Ate	epad	2193881	[+] 21938 20.4	⊕ J PR 1LB,1LE	Luc	epad	2355481	[–] 23554 17.2	
			Ate		2301802	[+] 23018 20.4	PR 1LT,1LF	Luc		82037300		
			Ate	epad	2301881	[+] 23018 20.4	PR 1LT,1LF	Luc		82063300		
			Ate		82029300				PRO	92106303	ø 255 x 12 x 39.9	
			Ate		82062900							
				PRO	92106103	ø 312 x 25 x 46.4	PR 1LT,1LF					
				PRO	92106105	ø 312 x 25 x 46.4	PR 1LT,1LF					
		22500	Ate		2395001	[+] 23950 20.3		Luc		2332601	[–] 23326 17.7	
S4 quattro	09/99→12/01	186 / 253										
S4 quattro	09/00→12/02	187 / 254	Ate	epad	2395081	[+] 23950 20.3		Luc	epad	2332681	[–] 23326 17.7	
S4 quattro	03/03→12/04	253 / 344	Ate		82062900			Luc		82054900		
			Ate		82071800			Luc		82063300		
					92143900	ø 345 x 30 x 46.3			PRO	92137103	ø 300 x 22 x 35.9	
				PRO	92143903	ø 345 x 30 x 46.3						
A4 (8EC, B7) 11/04→06/08												
		22600	Luc		2194504	[+] 21945 19.6		Luc		2355401	[–] 23554 15.2	
1.6	11/04→06/08	75 / 102	Luc		82062800			Luc	epad	2355482	[–] 23554 15.2	
				PRO	92057603	ø 288 x 25 x 46.2		Luc		82063300		
				PRO	92057605	ø 288 x 25 x 46.2			PRO	92106203	ø 245 x 10 x 39.9	
				PRO	92083503	ø 280 x 22 x 46.2						
				PRO	92083505	ø 280 x 22 x 46.2						
		22700	Ate		2193801	[+] 21938 20.4	⊕ J	Luc		2355401	[–] 23554 15.2	
1.8 T	11/04→06/08	120 / 163										
1.8 T quattro	11/04→06/08	120 / 163	Ate	epad	2193881	[+] 21938 20.4	⊕ J	Luc	epad	2355482	[–] 23554 15.2	
2.0 TDI	06/06→06/08	125 / 170										
2.0 TFSI	06/05→06/08	162 / 220	Ate		2301802	[+] 23018 20.4	⊖ J	Luc		82063300		
2.0 TFSI	10/06→06/08	125 / 170										
2.0 TFSI quattro	06/05→06/08	162 / 220	Ate	epad	2301881	[+] 23018 20.4	⊖ J		PRO	92106303	ø 255 x 12 x 39.9	
3.0	11/04→05/06	160 / 218										
3.0 quattro	11/04→07/06	160 / 218	Ate		82029300							
3.2 FSI	01/05→06/08	188 / 255	Ate		82062900							
				PRO	92106103	ø 312 x 25 x 46.4						
				PRO	92106105	ø 312 x 25 x 46.4						
		22800	Ate		2193801	[+] 21938 20.4	⊕ J	Luc		2355401	[–] 23554 15.2	
1.9 TDI	11/04→06/08	85 / 116										
2.0	11/04→06/08	96 / 130	Ate	epad	2193881	[+] 21938 20.4	⊕ J	Luc	epad	2355482	[–] 23554 15.2	
2.0 TDI	11/04→06/08	100 / 136										
2.0 TDI	11/04→06/08	103 / 140	Ate		2301802	[+] 23018 20.4	⊖ J	Luc		82063300		
2.0 TDI	09/05→09/06	89 / 121										
2.0 TDI	11/05→11/06	93 / 126	Ate	epad	2301881	[+] 23018 20.4	⊖ J		PRO	92106203	ø 245 x 10 x 39.9	
2.0 TDI quattro	01/06→06/08	103 / 140										
			Ate		82029300							
			Ate		82062900							
		22900	Ate		2193801	[+] 21938 20.4	⊕ J PR 1LB,1LE Ø 288 mm	Luc		2355401	[–] 23554 15.2	PR 1KD Ø 245 mm
2.0 TDI	06/06→06/08	120 / 163					⊕ J PR 1LT,1LF Ø 312 mm					PR 1KP Ø 255 mm
2.0 TDI quattro	06/06→06/08	120 / 163	Ate	epad	2193881	[+] 21938 20.4	⊕ J PR 1LB,1LE Ø 288 mm	Luc	epad	2355482	[–] 23554 15.2	PR 1KD Ø 245 mm
2.0 TDI quattro	06/06→06/08	125 / 170					⊕ J PR 1LT,1LF Ø 312 mm					PR 1KP Ø 255 mm
2.7 TDI	11/05→06/08	120 / 163										

AUDI

AUDI

A4 (8EC, B7) 11/04→06/08

		22900												
2.0 TDI	06/06→06/08	120 / 163	Ate		2301802	[+] 23018	20.4	⊖ J PR 1LB,1LE Ø 288 mm ⊖ J PR 1LT,1LF Ø 312 mm	Luc		2391401	[o] 23914	17.2	PR 1KW Ø 288 mm
2.0 TDI quattro	06/06→06/08	120 / 163												
2.0 TDI quattro	06/06→06/08	125 / 170	Ate	epad	2301881	[+] 23018	20.4	⊖ J PR 1LB,1LE Ø 288 mm ⊖ J PR 1LT,1LF Ø 312 mm	Luc	epad	2391481	[o] 23914	17.2	PR 1KW Ø 288 mm
2.7 TDI	11/05→06/08	120 / 163	Ate		2376302	[+] 23763	20.3	PR 1LA,1LC Ø 320 mm	Luc		82509000			PR 1KW Ø 288 mm
			Ate	epad	2376381	[+] 23763	20.3	PR 1LA,1LC Ø 320 mm	Luc		82063300			PR 1KD,1KP,1KW
			Ate		82029300			PR 1LB,1LT,1LE,1LF PR 1LJ	Luc		82063500			PR 1KE
			Ate		82062900					PRO	92106203	ø 245 x 10 x 39.9		PR 1KD
			Ate		82071800			PR 1LA,1LC Ø 320 mm		PRO	92106303	ø 255 x 12 x 39.9		PR 1KP
				PRO	92106103	ø 312 x 25 x 46.4		PR 1LT,1LF		PRO	92137003	ø 288 x 12 x 35.8		PR 1KW
				PRO	92106105	ø 312 x 25 x 46.4		PR 1LT,1LF		PRO	92137103	ø 300 x 22 x 35.9		PR 1KE
				PRO	92106703	ø 320 x 30 x 46.5		PR 1LA,1LC						
				PRO	92106705	ø 320 x 30 x 46.5		PR 1LA,1LC						
				PRO	92158305	ø 320 x 30 x 46.5		PR 1LC						
		23000												
2.0 TDI 16V	11/04→06/08	103 / 140	Ate		2193801	[+] 21938	20.4	⊕ J	Luc		2355401	[–] 23554	15.2	
			Ate	epad	2193881	[+] 21938	20.4	⊕ J	Luc	epad	2355482	[–] 23554	15.2	
			Ate		2301802	[+] 23018	20.4	⊖ J	Luc		82063300			
			Ate	epad	2301881	[+] 23018	20.4	⊖ J		PRO	92106203	ø 245 x 10 x 39.9		
			Ate		82029300									
			Ate		82062900									
				PRO	92057603	ø 288 x 25 x 46.2								
				PRO	92057605	ø 288 x 25 x 46.2								
		23100												
2.0 TFSI	11/04→06/08	147 / 200	Ate		2376302	[+] 23763	20.3		Luc		2391401	[o] 23914	17.2	
2.0 TFSI quattro	11/04→06/08	147 / 200												
2.5 TDI	11/04→05/06	120 / 163	Ate	epad	2376381	[+] 23763	20.3		Luc	epad	2391481	[o] 23914	17.2	
2.7 TDI	01/06→06/08	132 / 180												
3.0 TDI quattro	11/04→06/08	150 / 204	Ate		82062900				Luc		82509000			
3.0 TDI quattro	01/06→06/08	171 / 233												
3.2 FSI quattro	01/05→06/08	188 / 255	Ate		82071800				Luc		82063300			
				PRO	92106703	ø 320 x 30 x 46.5				PRO	92137003	ø 288 x 12 x 35.8		
				PRO	92106705	ø 320 x 30 x 46.5								
				PRO	92158305	ø 320 x 30 x 46.5								
		23200												
RS4 quattro	09/05→06/08	309 / 420	Bre		2451701	[+] 24517	16.7	⊖ ceramic brake	Luc		2332601	[–] 23326	17.7	
			Ate		82062900				Luc	epad	2332681	[–] 23326	17.7	
									Luc		82054900			
		23300												
S4 quattro	11/04→06/08	253 / 344	Ate		2395001	[+] 23950	20.3		Luc		2332601	[–] 23326	17.7	
			Ate	epad	2395081	[+] 23950	20.3		Luc	epad	2332681	[–] 23326	17.7	
			Ate		82062900				Luc		82054900			
			Ate		82071800				Luc		82063500			
					92143900	ø 345 x 30 x 46.3				PRO	92137103	ø 300 x 22 x 35.9		
				PRO	92143903	ø 345 x 30 x 46.3								

A4 (8K2, B8) 11/07→

		23400												
1.8	09/10→	125 / 170	Ate		2470601	[+] 24706	20		Luc		2460602	[–] 24606	17.7	
1.8 TFSI	11/07→	118 / 160												
1.8 TFSI	01/08→	88 / 120	Ate	epad	2470681	[+] 24706	20		Luc	epad	2460682	[–] 24606	17.7	
1.8 TFSI	11/11→	125 / 170												
1.8 TFSI quattro	09/08→	118 / 160	Ate		82062900				Luc		82514200			
1.8 TFSI quattro	11/11→	125 / 170												
2.0 TDI	11/07→	100 / 136												
2.0 TDI	11/07→	105 / 143												

→

		kW / hp										
A4 (8K2, B8) 11/07→												
2.0 TDI	01/08→	125 / 170	Ate		**82076800**				PRO	**92160103**	ø 300 x 12 x 36.2	
2.0 TDI	06/08→	88 / 120		PRO	**92159903**	ø 314 x 25 x 52				**TPM0008**		
2.0 TDI	08/08→	120 / 163			**TPM0008**							
2.0 TDI	11/11→	130 / 177										
2.0 TDI quattro	01/08→	125 / 170										
2.0 TDI quattro	11/08→	105 / 143										
2.0 TDI quattro	11/11→	130 / 177										
		23500	Ate		**2470601**	[+] 24706 20	PR 1LT,1LY		Luc		**2460601**	[–] 24606 17.7	PR 1KE,1KP
2.0 TDI	05/13→	110 / 150										
2.0 TDI	09/13→	140 / 190	Ate		**2470681**	[+] 24706 20	PR 1LT,1LY		Luc		**2460602**	[–] 24606 17.7	PR 1KW,2EH
2.0 TDI quattro	05/13→	110 / 150		epad						epad			
2.0 TDI quattro	09/13→	140 / 190	Luc		**2474301**	[+] 24743 19.4	PR 1LA,1LB,1LJ,1LD		Luc		**2460681**	[–] 24606 17.7	PR 1KE,1KP
2.0 TFSI	05/13→	162 / 220		epad						epad			
2.0 TFSI	05/13→	165 / 224	Luc		**2474381**	[+] 24743 19.4	PR 1LA,1LB,1LJ,1LD		Luc		**2460682**	[–] 24606 17.7	PR 1KW,2EH
2.0 TFSI quattro	05/13→	162 / 220		epad						epad			
2.0 TFSI quattro	05/13→	165 / 224	Ate		**82076800**		PR 1LT,1LY		Luc		**82054900**		PR 1KE,1KP
			Luc		**82518300**		PR 1LA,1LB,1LJ,1LD			PRO	**92160103**	ø 300 x 12 x 36.2	PR 1KW,2EH
				PRO	**92159903**	ø 314 x 25 x 52	PR 1LT,1LY			PRO	**92238303**	ø 330 x 22 x 36.2	PR 1KE,1KP
				PRO	**92229203**	ø 345 x 30 x 52	PR 1ILJ,1LD →2013-08				**TPM0008**		
				PRO	**92229303**	ø 320 x 30 x 52.4	PR 1LA,1LB						
					TPM0008								
		23600	Ate		**2470601**	[+] 24706 20	PR 1LT,1LY Ø 314 mm		Luc		**2460601**	[–] 24606 17.7	PR 1KE Ø 330 mm
2.0 TFSI	06/08→	132 / 180											
2.0 TFSI	06/08→	155 / 211	Ate		**2470681**	[+] 24706 20	PR 1LT,1LY Ø 314 mm		Luc		**2460602**	[–] 24606 17.7	PR 1KW Ø 300 mm
2.0 TFSI flexible fuel	11/09→	132 / 180		epad						epad			
2.0 TFSI flexible fuel quattro	11/09→	132 / 180	Luc		**2474301**	[+] 24743 19.4	PR 1LA Ø 320 mm		Luc		**2460681**	[–] 24606 17.7	PR 1KE Ø 330 mm
2.0 TFSI quattro	11/09→03/12	132 / 180					PR 1LJ,1ZT Ø 345 mm			epad			
2.7 TDI	11/07→	120 / 163	Luc		**2474381**	[+] 24743 19.4	PR 1LA Ø 320 mm		Luc		**2460682**	[–] 24606 17.7	PR 1KW Ø 300 mm
3.0 TDI quattro	11/07→	176 / 240		epad			PR 1LJ,1ZT Ø 345 mm			epad			
3.0 TDI quattro	06/08→	155 / 211	Ate		**82062900**		PR 1LT,1LY Ø 314 mm		Luc		**82054900**		PR 1KE Ø 330 mm
			Ate		**82076800**		PR 1LT Ø 314 mm		Luc		**82514200**		PR 1KW Ø 300 mm
			Luc		**82518300**		PR 1LA Ø 320 mm →2011-06-20			PRO	**92160103**	ø 300 x 12 x 36.2	PR 1KW
							PR 1LJ Ø 345 mm →2011-06-20						
				PRO	**92159903**	ø 314 x 25 x 52	PR 1LT,1LY			PRO	**92160303**	ø 330 x 22 x 36.2	PR 1KE
				PRO	**92160003**	ø 320 x 29.8 x 52.1	PR 1LA →2011-06-20				**TPM0008**		
				PRO	**92160203**	ø 345 x 29.3 x 51.8	PR 1LJ →2011-06-20						
				PRO	**92229203**	ø 345 x 30 x 52	PR 1LJ,1ZT 2011-06-20→						
				PRO	**92229303**	ø 320 x 30 x 52.4	PR 1LA 2011-06-20→						
					TPM0008								
		23700	Luc		**2474301**	[+] 24743 19.4			Luc		**2460602**	[–] 24606 17.7	
2.0 TFSI quattro	06/08→	155 / 211											
2.7 TDI	11/07→	140 / 190	Luc		**2474381**	[+] 24743 19.4			Luc		**2460682**	[–] 24606 17.7	
3.2 FSI	09/08→	195 / 265		epad						epad			
3.2 FSI quattro	11/07→	195 / 265	Luc		**82518300**		→2011-06-20		Luc		**82514200**		
3.2 quattro	09/09→	190 / 258		PRO	**92160003**	ø 320 x 29.8 x 52.1	→2011-06-20			PRO	**92160103**	ø 300 x 12 x 36.2	
				PRO	**92229303**	ø 320 x 30 x 52.4	2011-06-20→				**TPM0008**		
					TPM0008								
		23800	Luc		**2474301**	[+] 24743 19.4			Luc		**2460602**	[–] 24606 17.7	
3.0 TDI	11/11→	150 / 204											
3.0 TDI quattro	11/11→	180 / 245	Luc		**2474381**	[+] 24743 19.4			Luc		**2460682**	[–] 24606 17.7	
				epad						epad			
			Luc		**82518300**				Luc		**82514200**		
				PRO	**92229303**	ø 320 x 30 x 52.4				PRO	**92160103**	ø 300 x 12 x 36.2	
					TPM0008						**TPM0008**		
		23900	Luc		**2474301**	[+] 24743 19.4			Luc		**2460601**	[–] 24606 17.7	
3.0 TFSI quattro	02/12→	200 / 272											
			Luc		**2474381**	[+] 24743 19.4			Luc		**2460681**	[–] 24606 17.7	
				epad						epad			
			Luc		**82518300**				Luc		**82054900**		

AUDI

AUDI

			kW / hp											
A4 (8K2, B8) 11/07→														
		23900			PRO	92229203	ø 345 x 30 x 52			PRO	92238303	ø 330 x 22 x 36.2	
3.0 TFSI quattro	02/12→	200 / 272				TPM0008					TPM0008		
		24000	Luc			2474301	[+] 24743 19.4		Luc		2460601	[–] 24606 17.7	
S4 quattro	11/08→	245 / 333	Luc		epad	2474381	[+] 24743 19.4		Luc		epad 2460681	[–] 24606 17.7	
			Luc			82518300			Luc		82054900		
					PRO	92160203	ø 345 x 29.3 x 51.8	→06/11		PRO	92160303	ø 330 x 22 x 36.2	
					PRO	92229203	ø 345 x 30 x 52	06/11→			TPM0008		
						TPM0008							
A4 Allroad (8KH, B8) 04/09→														
		24100	Ate			2470601	[+] 24706 20		Luc		2460602	[–] 24606 17.7	
2.0 TDI quattro	04/09→	120 / 163											
2.0 TDI quattro	04/09→	125 / 170	Ate		epad	2470681	[+] 24706 20		Luc		epad 2460682	[–] 24606 17.7	
2.0 TDI quattro	09/09→	100 / 136											
2.0 TDI quattro	09/09→	105 / 143											
2.0 TDI quattro	11/11→	130 / 177	Ate			82062900			Luc		82514200		
			Ate			82076800					PRO 92160103	ø 300 x 12 x 36.2	
					PRO	92159903	ø 314 x 25 x 52				TPM0008		
						TPM0008							
		24200	Ate			2470601	[+] 24706 20	PR 1LT	Luc		2460602	[–] 24606 17.7	
2.0 TDI quattro	05/13→	110 / 150											
2.0 TDI quattro	09/13→	140 / 190	Ate		epad	2470681	[+] 24706 20	PR 1LT	Luc		epad 2460682	[–] 24606 17.7	
2.0 TFSI quattro	05/13→	162 / 220											
2.0 TFSI quattro	05/13→	165 / 224	Luc			2474301	[+] 24743 19.4	PR 1LA			PRO 92160103	ø 300 x 12 x 36.2	
			Luc		epad	2474381	[+] 24743 19.4	PR 1LA			TPM0008		
			Ate			82076800		PR 1LT					
			Luc			82518300		PR 1LA					
					PRO	92159903	ø 314 x 25 x 52	PR 1LT					
					PRO	92229303	ø 320 x 30 x 52.4	PR 1LA					
						TPM0008							
		24300	Luc			2474301	[+] 24743 19.4		Luc		2460602	[–] 24606 17.7	
2.0 TFSI quattro	04/09→	155 / 211											
3.0 TDI quattro	04/09→	176 / 240	Luc		epad	2474381	[+] 24743 19.4		Luc		epad 2460682	[–] 24606 17.7	
			Luc			82518300		→2011-06-20	Luc		82514200		
					PRO	92160003	ø 320 x 29.8 x 52.1	→2011-06-20			PRO 92160103	ø 300 x 12 x 36.2	
					PRO	92229303	ø 320 x 30 x 52.4	2011-06-20→			TPM0008		
						TPM0008							
		24400	Luc			2474301	[+] 24743 19.4		Luc		2460602	[–] 24606 17.7	
3.0 TDI quattro	01/12→	180 / 245	Luc		epad	2474381	[+] 24743 19.4		Luc		epad 2460682	[–] 24606 17.7	
			Luc			82518300			Luc		82514200		
					PRO	92229303	ø 320 x 30 x 52.4				PRO 92160103	ø 300 x 12 x 36.2	
						TPM0008					TPM0008		
A4 Allroad Avant (8KH, B8) 04/09→ → A4 Allroad (8KH, B8), Page 36														
A4 Allroad Estate (8KH, B8) 04/09→ → A4 Allroad (8KH, B8), Page 36														
A4 Avant (8D5, B5) 11/94→09/01														
		24500	Luc			2066921	[–] 20669 19.6	→8D-V-169695	Luc		2114401	[–] 21144 16.6	→8D-V-168350
1.6	11/94→09/01	74 / 100											
1.6	07/00→09/01	75 / 102	Luc			2194503	[–] 21945 19.6	8D-V-169696→ →8D-X-199999	Luc		2355402	[–] 23554 17.2	8D-V-168351→
1.9 DUO	03/98→09/01	66 / 90											
1.9 TDI	02/96→09/01	66 / 90											
1.9 TDI	03/96→09/01	55 / 75	Luc			2194504	[+] 21945 19.6	8D-X-200001→	Luc		epad 2355481	[–] 23554 17.2	8D-V-168351→

→

A4 Avant (8D5, B5) 11/94→09/01

		kW / hp										
		24500	Luc		82062800			Luc		82062800		
1.6	11/94→09/01	74 / 100										
1.6	07/00→09/01	75 / 102		PRO	92071603	ø 280 x 13 x 46.2	→8D·V·169695		PRO	92072103	ø 245 x 10 x 83.6	
1.9 DUO	03/98→09/01	66 / 90										
1.9 TDI	02/96→09/01	66 / 90		PRO	92057603	ø 288 x 25 x 46.2	8D·V·169696→		PRO	92154303	ø 245 x 10 x 83.6	
1.9 TDI	03/96→09/01	55 / 75		PRO	92057605	ø 288 x 25 x 46.2	8D·V·169696→					
				PRO	92083503	ø 280 x 22 x 46.2	8D·V·169696→					
				PRO	92083505	ø 280 x 22 x 46.2	8D·V·169696→					
		24600	Ate		2162402	[–] 21624 20.4	→8D·V·054061	Luc		2114401	[–] 21144 16.6	→8D·V·168350
1.8	07/95→09/01	85 / 115										
1.8	02/96→09/01	92 / 125	Luc		2194503	[–] 21945 19.6	8D·V·054062→ →8D·X·199999	Luc		2355402	[–] 23554 17.2	8D·V·168351→
			Luc		2194504	[+] 21945 19.6	8D·X·200001→	Luc	epad	2355481	[–] 23554 17.2	8D·V·168351→
			Ate		82029300		→8D·V·054061	Luc		82062800		
			Luc		82062800				PRO	92072103	ø 245 x 10 x 83.6	
			Ate		82062900		→8D·V·054061		PRO	92154303	ø 245 x 10 x 83.6	
				PRO	92057403	ø 288 x 15 x 46.2	→8D·V·054061					
				PRO	92057603	ø 288 x 25 x 46.2	8D·V·054062→					
				PRO	92057605	ø 288 x 25 x 46.2	8D·V·054062→					
				PRO	92083503	ø 280 x 22 x 46.2	8D·V·054062→					
				PRO	92083505	ø 280 x 22 x 46.2	8D·V·054062→					
		24700	Ate		2162402	[–] 21624 20.4	→8D·V·054061	Luc		2114401	[–] 21144 16.6	→8D·X·199999 8D·X·200001→ PR 1KD
1.8 quattro	07/95→09/01	85 / 115										
1.8 quattro	01/96→09/01	92 / 125	Luc		2194503	[–] 21945 19.6	8D·V·054062→ →8D·X·199999	Luc		2355402	[–] 23554 17.2	8D·X·200001→ PR 1KE
			Luc		2194504	[+] 21945 19.6	8D·X·200001→	Luc	epad	2355481	[–] 23554 17.2	8D·X·200001→ PR 1KE
			Ate		82029300		→8D·V·054061	Luc		82062800		
			Luc		82062800				PRO	92088503	ø 245 x 10 x 48	PR 1KD
			Ate		82062900		→8D·V·054061		PRO	92174203	ø 256 x 22 x 48	PR 1KE
				PRO	92057403	ø 288 x 15 x 46.2	→8D·V·054061					
				PRO	92057603	ø 288 x 25 x 46.2	8D·V·054062→					
				PRO	92057605	ø 288 x 25 x 46.2	8D·V·054062→					
				PRO	92083503	ø 280 x 22 x 46.2	8D·V·054062→					
				PRO	92083505	ø 280 x 22 x 46.2	8D·V·054062→					
		24800	Ate		2162402	[–] 21624 20.4	→8D·X·199999	Luc		2114401	[–] 21144 16.6	→8D·V·168350
1.8 T	03/96→09/01	110 / 150										
1.8 T	12/97→09/01	132 / 180	Ate		2193801	[+] 21938 20.4	8D·X·200000→	Luc		2355402	[–] 23554 17.2	8D·V·168351→
1.9 TDI	02/96→09/01	81 / 110										
1.9 TDI	03/00→09/01	85 / 115	Ate	epad	2193881	[+] 21938 20.4	8D·X·200000→	Luc	epad	2355481	[–] 23554 17.2	8D·V·168351→
2.4	03/97→09/01	121 / 165										
2.4	08/97→09/01	120 / 163	Ate		82029300			Luc		82062800		
2.5 TDI	09/97→09/01	110 / 150										
2.6	02/96→09/01	110 / 150	Ate		82062900				PRO	92072103	ø 245 x 10 x 83.6	
2.8	10/96→09/01	142 / 193										
2.8	03/99→09/00	140 / 190		PRO	92154303	ø 245 x 10 x 83.6						
		24900	Ate		2162402	[–] 21624 20.4	→8D·X·199999	Luc		2114401	[–] 21144 16.6	→8D·X·199999 8D·X·200001→ PR 1KD
1.8 T quattro	01/96→09/01	110 / 150										
1.8 T quattro	12/97→09/01	132 / 180	Ate		2193801	[+] 21938 20.4	8D·X·200001→	Luc		2355402	[–] 23554 17.2	8D·X·200001→ PR 1KE
1.9 TDI quattro	09/96→09/01	81 / 110										
1.9 TDI quattro	03/00→09/01	85 / 115	Ate	epad	2193881	[+] 21938 20.4	8D·X·200001→	Luc	epad	2355481	[–] 23554 17.2	8D·X·200001→ PR 1KE
2.4 quattro	03/97→09/01	121 / 165										
2.4 quattro	08/97→09/01	120 / 163	Ate		82029300			Luc		82062800		
2.5 TDI quattro	09/97→09/01	110 / 150										
2.6 quattro	01/96→09/01	110 / 150	Ate		82062900				PRO	92088503	ø 245 x 10 x 48	PR 1KD
2.8 quattro	10/96→09/01	142 / 193										
2.8 quattro	03/99→09/00	140 / 190		PRO	92174203	ø 256 x 22 x 48	PR 1KE					

AUDI

AUDI

		kW / hp											
A4 Avant (8D5, B5) 11/94→09/01													
		25000	Ate		**2148401**	[o] 21484 20.8		Luc		**2421101**	[+] 24211 17.2	
2.8 quattro	10/00→09/01	280 / 381			**98038600**	L305		Luc		**82062800**		
RS4 quattro	05/00→09/01	280 / 380	Ate		**82029300**							
			Ate		**82062900**							
		25100	Luc		**2145401**	[+] 21454 18.5	→8D-X-199999	Luc		**2355402**	[–] 23554 17.2	
S4 quattro	09/97→09/01	195 / 265	Luc		**2328001**	[+] 23280 18.3	8D-X-200000→ →8D-1-200000	Luc		**2355481**	[–] 23554 17.2	
			Ate		**2376302**	[+] 23763 20.3	8E-1-000001→	Luc		**82062800**		
			Ate		**2376381**	[+] 23763 20.3	8E-1-000001→			**92174203**	ø 256 x 22 x 48	
			Ate		**82062900**		8E-1-000001→					
			Ate		**82071800**		8E-1-000001→					
					92106703	ø 320 x 30 x 46.5	→8D-1-200000					
					92106705	ø 320 x 30 x 46.5	→8D-1-200000					
A4 Avant (8E5, B6) 09/00→12/04													
		25200	Luc		**2194504**	[+] 21945 19.6		Luc		**2355402**	[–] 23554 17.2	
1.6	09/01→12/04	75 / 102	Luc		**82062800**			Luc		**2355481**	[–] 23554 17.2	
1.9 TDI	11/01→12/04	74 / 101			**92057603**	ø 288 x 25 x 46.2		Luc		**82037300**		
					92057605	ø 288 x 25 x 46.2		Luc		**82063300**		
					92083503	ø 280 x 22 x 46.2				**92106203**	ø 245 x 10 x 39.9	
					92083505	ø 280 x 22 x 46.2						
		25300	Ate		**2193801**	[+] 21938 20.4	⊕ J	Luc		**2355402**	[–] 23554 17.2	
1.8 T	09/01→07/02	110 / 150										
1.8 T quattro	09/01→07/02	110 / 150										
1.8 T quattro	09/01→12/04	125 / 170	Ate		**2193881**	[+] 21938 20.4	⊕ J	Luc		**2355481**	[–] 23554 17.2	
1.9 TDI	09/01→12/04	96 / 130										
1.9 TDI quattro	11/01→12/04	96 / 130	Ate		**2301802**	[+] 23018 20.4		Luc		**82037300**		
2.0	09/01→12/04	96 / 130										
2.0 FSI	07/02→12/04	110 / 150	Ate		**2301881**	[+] 23018 20.4		Luc		**82063300**		
			Ate		**82029300**					**92106203**	ø 245 x 10 x 39.9	
			Ate		**82062900**							
		25400	Ate		**2193801**	[+] 21938 20.4	⊕ J	Luc		**2355401**	[–] 23554 15.2	
1.8 T	07/02→12/04	120 / 163										
1.8 T quattro	07/02→12/04	120 / 163	Ate		**2193881**	[+] 21938 20.4	⊕ J	Luc		**2355482**	[–] 23554 15.2	
2.4	09/01→12/04	125 / 170										
2.5 TDI	09/01→07/02	114 / 155										
2.5 TDI	07/02→12/04	120 / 163	Ate		**2301802**	[+] 23018 20.4		Luc		**82037300**		
3.0 quattro	09/01→12/04	162 / 220										
			Ate		**2301881**	[+] 23018 20.4		Luc		**82063300**		
			Ate		**82029300**					**92106303**	ø 255 x 12 x 39.9	
			Ate		**82062900**							
					92106103	ø 312 x 25 x 46.4						
					92106105	ø 312 x 25 x 46.4						
		25500	Ate		**2193801**	[+] 21938 20.4	⊕ J PR 1LB,1LE	Luc		**2355402**	[–] 23554 17.2	
1.8 T	11/02→12/04	140 / 190										
1.8 T quattro	11/02→12/04	140 / 190										
1.9 TDI	06/04→12/04	85 / 116	Ate		**2193881**	[+] 21938 20.4	⊕ J PR 1LB,1LE	Luc		**2355481**	[–] 23554 17.2	
2.4	09/01→12/04	120 / 163										
3.0	04/01→12/04	160 / 218	Ate		**2301802**	[+] 23018 20.4	PR 1LT,1LF	Luc		**82037300**		
3.0	09/01→12/04	162 / 220										
3.0 quattro	04/01→12/04	160 / 218	Ate		**2301881**	[+] 23018 20.4	PR 1LT,1LF	Luc		**82063300**		
			Ate		**82029300**					**92106203**	ø 245 x 10 x 39.9	→8E-2-400000 ⊕ 4 cyl. 8E-3-000001→ PR 1KD
			Ate		**82062900**					**92106303**	ø 255 x 12 x 39.9	→8E-2-400000 ⊕ 6 cyl. 8E-3-000001→
					92106103	ø 312 x 25 x 46.4	PR 1LT,1LF					

→

kW / hp

A4 Avant (8E5, B6) 09/00→12/04

25500														
1.8 T	11/02→12/04	140 / 190		PRO	92106105	ø 312 x 25 x 46.4	PR 1LT,1LF							
1.8 T quattro	11/02→12/04	140 / 190												
1.9 TDI	06/04→12/04	85 / 116												
2.4	09/01→12/04	120 / 163												
3.0	04/01→12/04	160 / 218												
3.0	09/01→12/04	162 / 220												
3.0 quattro	04/01→12/04	160 / 218												
25600														
2.5 TDI	10/00→05/03	132 / 179	Ate		2301802	[+] 23018 20.4	PR 1LT,1LF	Luc		2355402	[–] 23554 17.2			
			Ate	epad	2301881	[+] 23018 20.4	PR 1LT,1LF	Luc	epad	2355481	[–] 23554 17.2			
			Ate		82029300			Luc		82037300				
			Ate		82062900			Luc		82063300				
				PRO	92106103	ø 312 x 25 x 46.4	PR 1LT,1LF		PRO	92106203	ø 245 x 10 x 39.9	→8E-2-400000 ⊕ 4 cyl. 8E-3-000001→ PR 1KD		
				PRO	92106105	ø 312 x 25 x 46.4	PR 1LT,1LF		PRO	92106303	ø 255 x 12 x 39.9	→8E-2-400000 ⊕ 6 cyl. 8E-3-000001→		
25700														
2.5 TDI quattro	09/01→12/04	132 / 180	Ate		2193801	[+] 21938 20.4	⊕ J	Luc		2355401	[–] 23554 15.2			
			Ate	epad	2193881	[+] 21938 20.4	⊕ J	Luc	epad	2355482	[–] 23554 15.2			
			Ate		2301802	[+] 23018 20.4		Luc		82037300				
			Ate	epad	2301881	[+] 23018 20.4		Luc		82063300				
			Ate		82029300				PRO	92106303	ø 255 x 12 x 39.9	→8E-2-400000 ⊕ 6 cyl. 8E-3-000001→		
			Ate		82062900									
				PRO	92106103	ø 312 x 25 x 46.4								
				PRO	92106105	ø 312 x 25 x 46.4								
25800														
2.7 quattro	09/01→12/02	195 / 265	Luc		2194504	[+] 21945 19.6	PR 1LZ	Luc		2355402	[–] 23554 17.2			
			Ate		2301802	[+] 23018 20.4	PR 1LB,1LE,1LT,1LF	Luc	epad	2355481	[–] 23554 17.2			
			Ate	epad	2301881	[+] 23018 20.4	PR 1LB,1LE,1LT,1LF		PRO	92072103	ø 245 x 10 x 83.6			
			Ate		82029300		PR 1LB,1LE,1LT,1LF		PRO	92154303	ø 245 x 10 x 83.6			
				PRO	92057603	ø 288 x 25 x 46.2	PR 1LZ							
				PRO	92057605	ø 288 x 25 x 46.2	PR 1LZ							
				PRO	92083503	ø 280 x 22 x 46.2	PR 1LZ							
				PRO	92083505	ø 280 x 22 x 46.2	PR 1LZ							
25900														
2.7 S4 quattro	09/00→12/02	186 / 253	Luc		2194504	[+] 21945 19.6	PR 1LZ	Luc		2332601	[–] 23326 17.7	PR 1LJ		
			Ate		2301802	[+] 23018 20.4	PR 1LB	Luc	epad	2332681	[–] 23326 17.7	PR 1LJ		
			Ate	epad	2301881	[+] 23018 20.4	PR 1LB	Luc		2355402	[–] 23554 17.2			
			Ate		2395001	[+] 23950 20.3	PR 1LJ	Luc	epad	2355481	[–] 23554 17.2			
			Ate	epad	2395081	[+] 23950 20.3	PR 1LJ		PRO	92072103	ø 245 x 10 x 83.6			
			Ate		82029300				PRO	92154303	ø 245 x 10 x 83.6			
					92143900	ø 345 x 30 x 46.3	PR 1LJ							
				PRO	92057603	ø 288 x 25 x 46.2	PR 1LB							
				PRO	92057605	ø 288 x 25 x 46.2	PR 1LB							
				PRO	92083503	ø 280 x 22 x 46.2	PR 1LZ							
				PRO	92083505	ø 280 x 22 x 46.2	PR 1LZ							
				PRO	92137103	ø 300 x 22 x 35.9	PR 1LJ							
				PRO	92143903	ø 345 x 30 x 46.3	PR 1LJ							
					TPM0008		PR 1LJ							
26000														
S4 quattro	03/03→12/04	253 / 344	Ate		2395001	[+] 23950 20.3		Luc		2332601	[–] 23326 17.7			

AUDI

AUDI

		kW / hp										
A4 Avant (8E5, B6) 09/00→12/04												
		26000	Ate	2395081	[+] 23950 20.3		Luc	2332681	[–] 23326 17.7	
S4 quattro	03/03→12/04	253 / 344	Ate	82062900			Luc	82054900		
			Ate	82071800			Luc	82063300		
				92143900	ø 345 x 30 x 46.3			92137103	ø 300 x 22 x 35.9	
				92143903	ø 345 x 30 x 46.3					
A4 Avant (8ED, B7) 11/04→06/08												
		26100	Luc	2194504	[+] 21945 19.6		Luc	2355401	[–] 23554 15.2	
1.6	11/04→06/08	75 / 102	Luc	82062800			Luc	2355482	[–] 23554 15.2	
				92057603	ø 288 x 25 x 46.2		Luc	82063300		
				92057605	ø 288 x 25 x 46.2			92106203	ø 245 x 10 x 39.9	
				92083503	ø 280 x 22 x 46.2					
				92083505	ø 280 x 22 x 46.2					
		26200	Ate	2193801	[+] 21938 20.4	⊕ J	Luc	2355401	[–] 23554 15.2	
1.8 T	11/04→06/08	120 / 163								
1.8 T quattro	11/04→06/08	120 / 163	Ate	2193881	[+] 21938 20.4	⊕ J	Luc	2355482	[–] 23554 15.2	
2.0 TDI	06/06→06/08	125 / 170								
2.0 TDI quattro	06/06→06/08	125 / 170								
2.0 TFSI	10/06→06/08	125 / 170	Ate	2301802	[+] 23018 20.4	⊖ J	Luc	82063300		
			Ate	2301881	[+] 23018 20.4	⊖ J		92106303	ø 255 x 12 x 39.9	
			Ate	82029300						
			Ate	82062900						
				92106103	ø 312 x 25 x 46.4					
				92106105	ø 312 x 25 x 46.4					
		26300	Ate	2193801	[+] 21938 20.4	⊕ J	Luc	2355401	[–] 23554 15.2	
1.9 TDI	11/04→06/08	85 / 116								
2.0	11/04→06/08	96 / 130	Ate	2193881	[+] 21938 20.4	⊕ J	Luc	2355482	[–] 23554 15.2	
2.0 TDI	11/04→06/08	100 / 136								
2.0 TDI	11/04→06/08	103 / 140								
2.0 TDI	09/05→09/06	89 / 121	Ate	2301802	[+] 23018 20.4	⊖ J	Luc	82063300		
2.0 TDI	11/05→11/06	93 / 126								
2.0 TDI 16V	11/04→06/08	103 / 140								
2.0 TDI quattro	01/06→06/08	103 / 140	Ate	2301881	[+] 23018 20.4	⊖ J		92106203	ø 245 x 10 x 39.9	
			Ate	82029300						
			Ate	82062900						
		26400	Ate	2193801	[+] 21938 20.4	⊕ J PR 1LB,1LE Ø 288 mm	Luc	2355401	[–] 23554 15.2	PR 1KD Ø 245 mm
2.0 TDI	06/06→06/08	120 / 163				⊕ J PR 1LT,1LF Ø 312 mm				PR 1KP Ø 255 mm
2.0 TDI quattro	06/06→06/08	120 / 163	Ate	2193881	[+] 21938 20.4	⊕ J PR 1LB,1LE Ø 288 mm	Luc	2355482	[–] 23554 15.2	PR 1KD Ø 245 mm
2.7 TDi	11/05→03/08	120 / 163				⊕ J PR 1LT,1LF Ø 312 mm				PR 1KP Ø 255 mm
			Ate	2301802	[+] 23018 20.4	⊖ J PR 1LB,1LE Ø 288 mm	Luc	2391401	[o] 23914 17.2	PR 1KW Ø 288 mm
						⊖ J PR 1LT,1LF Ø 312 mm				
			Ate	2301881	[+] 23018 20.4	⊖ J PR 1LB,1LE Ø 288 mm	Luc	2391481	[o] 23914 17.2	PR 1KW Ø 288 mm
						⊖ J PR 1LT,1LF Ø 312 mm				
			Ate	2376302	[+] 23763 20.3	PR 1LA,1LC Ø 320 mm	Luc	82509000		PR 1KW Ø 288 mm
			Ate	2376381	[+] 23763 20.3	PR 1LA,1LC Ø 320 mm	Luc	82063300		PR 1KD,1KP,1KW
			Ate	82029300		PR 1LB,1LT,1LE,1LF PR 1LJ	Luc	82063500		PR 1KE
			Ate	82062900				92106203	ø 245 x 10 x 39.9	PR 1KD
			Ate	82071800		PR 1LA,1LC Ø 320 mm		92106303	ø 255 x 12 x 39.9	PR 1KP
				92106103	ø 312 x 25 x 46.4	PR 1LT,1LF		92137003	ø 288 x 12 x 35.8	PR 1KW
				92106105	ø 312 x 25 x 46.4	PR 1LT,1LF		92137103	ø 300 x 22 x 35.9	PR 1KE
				92106703	ø 320 x 30 x 46.5	PR 1LA,1LC				
				92106705	ø 320 x 30 x 46.5	PR 1LA,1LC				
				92158305	ø 320 x 30 x 46.5	PR 1LC				

→

		kW / hp												
A4 Avant (8ED, B7) 11/04→06/08														
		26500	Ate		2376302	[+] 23763 20.3		Luc		2391401	[o] 23914 17.2		
2.0 TFSI	11/04→06/08	147 / 200											
2.0 TFSI	06/05→06/08	162 / 220	Ate	epad	2376381	[+] 23763 20.3		Luc	epad	2391481	[o] 23914 17.2		
2.0 TFSI quattro	11/04→06/08	147 / 200											
2.0 TFSI quattro	06/05→06/08	162 / 220											
2.5 TDI	11/04→05/06	120 / 163	Ate		82062900			Luc		82509000			
2.7 TDI	01/06→06/08	132 / 180											
3.0 quattro	11/04→07/06	160 / 218											
3.0 TDI quattro	11/04→06/08	150 / 204	Ate		82071800			Luc		82063300			
3.0 TDI quattro	01/06→06/08	171 / 233											
3.2 FSI	01/05→06/08	188 / 255		PRO	92106703	ø 320 x 30 x 46.5			PRO	92137003	ø 288 x 12 x 35.8		
3.2 FSI quattro	01/05→06/08	188 / 255		PRO	92106705	ø 320 x 30 x 46.5							
				PRO	92158305	ø 320 x 30 x 46.5							
		26600	Ate		2376302	[+] 23763 20.3		Luc		2391401	[o] 23914 17.2		Ø 288 mm
3.0	11/04→05/06	160 / 218											
			Ate	epad	2376381	[+] 23763 20.3		Luc	epad	2391481	[o] 23914 17.2		Ø 288 mm
			Ate		82062900			Luc		82509000			
			Ate		82071800			Luc		82063300			
				PRO	92106703	ø 320 x 30 x 46.5			PRO	92137003	ø 288 x 12 x 35.8		
				PRO	92106705	ø 320 x 30 x 46.5							
				PRO	92158305	ø 320 x 30 x 46.5	PR 1LC						
		26700	Bre		2451701	[+] 24517 16.7	⊖ ceramic brake	Luc		2332601	[–] 23326 17.7		
RS4 quattro	09/05→06/08	309 / 420											
								Luc	epad	2332681	[–] 23326 17.7		
								Luc		82054900			
									PRO	92106303	ø 255 x 12 x 39.9		
		26800	Ate		2395001	[+] 23950 20.3		Luc		2332601	[–] 23326 17.7		
S4 quattro	11/04→06/08	253 / 344											
			Ate	epad	2395081	[+] 23950 20.3		Luc	epad	2332681	[–] 23326 17.7		
			Ate		82062900			Luc		82054900			
			Ate		82071800			Luc		82063500			
					92143900	ø 345 x 30 x 46.3			PRO	92106303	ø 255 x 12 x 39.9		
				PRO	92143903	ø 345 x 30 x 46.3			PRO	92137103	ø 300 x 22 x 35.9		
				PRO	92158305	ø 320 x 30 x 46.5							
A4 Avant (8K5, B8) 11/07→														
		26900	Ate		2470601	[+] 24706 20		Luc		2460602	[–] 24606 17.7		
1.8 TFSI	11/07→	118 / 160											
1.8 TFSI	04/08→	88 / 120	Ate	epad	2470681	[+] 24706 20		Luc	epad	2460682	[–] 24606 17.7		
1.8 TFSI	11/11→	125 / 170											
1.8 TFSI quattro	09/08→	118 / 160											
1.8 TFSI quattro	11/11→	125 / 170	Ate		82062900			Luc		82514200			
2.0 TDI	04/08→	100 / 136											
2.0 TDI	04/08→	105 / 143											
2.0 TDI	04/08→	125 / 170	Ate		82076800				PRO	92160103	ø 300 x 12 x 36.2		
2.0 TDI	06/08→	88 / 120											
2.0 TDI	08/08→	120 / 163		PRO	92159903	ø 314 x 25 x 52				TPM0008			
2.0 TDI	11/11→	130 / 177											
2.0 TDI quattro	04/08→	105 / 143			TPM0008								
2.0 TDI quattro	08/08→	125 / 170											
2.0 TDI quattro	11/11→	130 / 177											
		27000	Luc		2460601	[–] 24606 17.7	PR 1KE,1KP	Luc		2460602	[–] 24606 17.7	PR 1KW,2EH	
2.0 TDI	05/13→	110 / 150											
2.0 TDI	09/13→	140 / 190	Ate		2470601	[+] 24706 20	PR 1LT,1LY	Luc	epad	2460681	[–] 24606 17.7	PR 1KE,1KP	
2.0 TDI quattro	05/13→	110 / 150											
2.0 TDI quattro	09/13→	140 / 190	Ate	epad	2470681	[+] 24706 20	PR 1LT,1LY	Luc	epad	2460682	[–] 24606 17.7	PR 1KW,2EH	
2.0 TFSI	05/13→	165 / 224											
2.0 TFSI quattro	05/13→	165 / 224	Luc		2474301	[+] 24743 19.4	PR 1LA,1LB,1LJ,1LD	Luc		82054900		PR 1KE,1KP	
			Luc	epad	2474381	[+] 24743 19.4	PR 1LA,1LB,1LJ,1LD		PRO	92160103	ø 300 x 12 x 36.2	PR 1KW,2EH	
			Ate		82076800		PR 1LT,1LY		PRO	92238303	ø 330 x 22 x 36.2	PR 1KE,1KP	
			Luc		82518300		PR 1LA,1LB,1LJ,1LD			TPM0008			
				PRO	92159903	ø 314 x 25 x 52	PR 1LT,1LY						

AUDI

AUDI

A4 Avant (8K5, B8) 11/07→

			kW / hp											
			27000			92229203	ø 345 x 30 x 52	PR 1ILJ,1LD →2013-08						
2.0 TDI		05/13→	110 / 150											
2.0 TDI		09/13→	140 / 190			92229303	ø 320 x 30 x 52.4	PR 1LA,1LB						
2.0 TDI quattro		05/13→	110 / 150											
2.0 TDI quattro		09/13→	140 / 190			TPM0008								
2.0 TFSI		05/13→	165 / 224											
2.0 TFSI quattro		05/13→	165 / 224											
			27100	Ate		2470601	[+] 24706 20	PR 1LT,1LY Ø 314 mm	Luc		2460601	[–] 24606 17.7	PR 1KE Ø 330 mm
2.0 TFSI		06/08→	132 / 180											
2.0 TFSI flexible fuel		11/09→	132 / 180	Ate		2470681	[+] 24706 20	PR 1LT,1LY Ø 314 mm	Luc		2460602	[–] 24606 17.7	PR 1KW Ø 300 mm
2.0 TFSI flexible fuel quattro		11/09→	132 / 180											
2.7 TDI		06/08→	120 / 163	Luc		2474301	[+] 24743 19.4	PR 1LA Ø 320 mm	Luc		2460681	[–] 24606 17.7	PR 1KE Ø 330 mm
								PR 1LJ,1ZT Ø 345 mm						
				Luc		2474381	[+] 24743 19.4	PR 1LA Ø 320 mm	Luc		2460682	[–] 24606 17.7	PR 1KW Ø 300 mm
								PR 1LJ,1ZT Ø 345 mm						
				Ate		82062900		PR 1LT,1LY Ø 314 mm	Luc		82054900		PR 1KE Ø 330 mm
				Ate		82076800		PR 1LT Ø 314 mm	Luc		82514200		PR 1KW Ø 300 mm
				Luc		82518300		PR 1LA Ø 320 mm →2011-06-20			92160103	ø 300 x 12 x 36.2	PR 1KW
								PR 1LJ Ø 345 mm →2011-06-20					
						92159903	ø 314 x 25 x 52	PR 1LT,1LY			92160303	ø 330 x 22 x 36.2	PR 1KE
						92160003	ø 320 x 29.8 x 52.1	PR 1LA →2011-06-20			TPM0008		
						92160203	ø 345 x 29.3 x 51.8	PR 1LJ →2011-06-20					
						92229203	ø 345 x 30 x 52	PR 1LJ,1ZT 2011-06-20→					
						92229303	ø 320 x 30 x 52.4	PR 1LA 2011-06-20→					
						TPM0008							
			27200	Luc		2474301	[+] 24743 19.4		Luc		2460602	[–] 24606 17.7	
2.0 TFSI		06/08→	155 / 211										
2.0 TFSI quattro		06/08→	155 / 211	Luc		2474381	[+] 24743 19.4		Luc		2460682	[–] 24606 17.7	
2.7 TDI		04/08→	140 / 190										
3.0 TDI quattro		04/08→	176 / 240										
3.0 TDI quattro		06/08→	155 / 211	Luc		82518300		→2011-06-20	Luc		82514200		
3.2 FSI		09/08→	195 / 265										
3.2 FSI quattro		04/08→	195 / 265			92160003	ø 320 x 29.8 x 52.1	→2011-06-20			92160103	ø 300 x 12 x 36.2	
						92229303	ø 320 x 30 x 52.4	2011-06-20→			TPM0008		
						TPM0008							
			27300	Luc		2474301	[+] 24743 19.4		Luc		2460602	[–] 24606 17.7	
3.0 TDI		11/11→	150 / 204										
3.0 TDI quattro		11/11→	180 / 245	Luc		2474381	[+] 24743 19.4		Luc		2460682	[–] 24606 17.7	
				Luc		82518300			Luc		82514200		
						92229303	ø 320 x 30 x 52.4				92160103	ø 300 x 12 x 36.2	
						TPM0008					TPM0008		
			27400	Luc		2474301	[+] 24743 19.4		Luc		2460601	[–] 24606 17.7	
3.0 TFSI quattro		02/12→	200 / 272										
				Luc		2474381	[+] 24743 19.4		Luc		2460681	[–] 24606 17.7	
				Luc		82518300			Luc		82054900		
						92229203	ø 345 x 30 x 52				92238303	ø 330 x 22 x 36.2	
						TPM0008					TPM0008		
			27500	Bre		2488801	[+] 24888 16.7	→03/13	Luc		2521403	[+] 25214 17.5	
RS4 quattro		05/12→	331 / 450						Luc		82054900		
											TPM0008		
			27600	Luc		2474301	[+] 24743 19.4		Luc		2460601	[–] 24606 17.7	
S4 quattro		11/08→	245 / 333										
				Luc		2474381	[+] 24743 19.4		Luc		2460681	[–] 24606 17.7	
				Luc		82518300			Luc		82054900		
						92160203	ø 345 x 29.3 x 51.8	→06/11			92160303	ø 330 x 22 x 36.2	
						92229203	ø 345 x 30 x 52	06/11→			TPM0008		

→

		kW / hp									
A4 Avant (8K5, B8) 11/07→											
		27600									
S4 quattro	11/08→	245 / 333		TPM0008							
A4 Cabriolet (8H7, B6, 8HE, B7) 04/02→03/09 → A4 Convertible (8H7, B6, 8HE, B7), Page 43											
A4 Convertible (8H7, B6, 8HE, B7) 04/02→03/09											
		27700	Ate	2193801	[+] 21938 20.4	⊕ J	Luc	2355402	[–] 23554 17.2		
1.8 T	07/02→03/09	120 / 163									
1.8 T quattro	05/03→03/09	120 / 163	Ate	2193881	[+] 21938 20.4	⊕ J	Luc	2355481	[–] 23554 17.2		
			Ate	2301802	[+] 23018 20.4	⊖ J	Luc	82037300			
			Ate	2301881	[+] 23018 20.4	⊖ J	Luc	82063300			
			Ate	82029300			PRO	92106303	ø 255 x 12 x 39.9		
			Ate	82062900							
			PRO	92106103	ø 312 x 25 x 46.4						
			PRO	92106105	ø 312 x 25 x 46.4						
		27800	Ate	2193801	[+] 21938 20.4	⊕ J PR 1LB,1LE,1LT,1LF Ø 288 mm Ø 312 mm	Luc	2355402	[–] 23554 17.2		
1.8 T	10/02→10/05	125 / 170									
2.0 TFSi quattro	11/05→03/09	147 / 200	Ate	2193881	[+] 21938 20.4	⊕ J PR 1LB,1LE,1LT,1LF Ø 288 mm Ø 312 mm	Luc	2355481	[–] 23554 17.2		
			Ate	2301802	[+] 23018 20.4	⊖ J PR 1LB,1LE,1LT,1LF Ø 288 mm Ø 312 mm	Luc	82037300			
			Ate	2301881	[+] 23018 20.4	⊖ J PR 1LB,1LE,1LT,1LF Ø 288 mm Ø 312 mm	Luc	82063300			
			Ate	2376302	[+] 23763 20.3	PR 1LA Ø 320 mm	PRO	92106203	ø 245 x 10 x 39.9	PR 1KD	
			Ate	2376381	[+] 23763 20.3	PR 1LA Ø 320 mm	PRO	92106303	ø 255 x 12 x 39.9	PR 1KP	
			Ate	82029300			PRO	92137003	ø 288 x 12 x 35.8	PR 1KW	
			Ate	82062900							
			Ate	82071800		PR 1LA Ø 320 mm					
			PRO	92106103	ø 312 x 25 x 46.4	PR 1LT,1LF					
			PRO	92106105	ø 312 x 25 x 46.4	PR 1LT,1LF					
			PRO	92106703	ø 320 x 30 x 46.5	PR 1LA					
			PRO	92106705	ø 320 x 30 x 46.5	PR 1LA					
		27900	Ate	2193801	[+] 21938 20.4	⊕ J	Luc	2355402	[–] 23554 17.2		
2.0	09/04→12/05	96 / 130									
2.0 TDI	01/06→03/09	100 / 136									
2.0 TDI	01/06→03/09	103 / 140	Ate	2193881	[+] 21938 20.4	⊕ J	Luc	2355481	[–] 23554 17.2		
			Ate	2301802	[+] 23018 20.4	⊖ J	Luc	82037300			
			Ate	2301881	[+] 23018 20.4	⊖ J	Luc	82063300			
			Ate	82029300			PRO	92106203	ø 245 x 10 x 39.9		
			Ate	82062900							
		28000	Ate	2376302	[+] 23763 20.3		Luc	2355402	[–] 23554 17.2		
2.0 TFSI 16V	01/06→03/09	147 / 200	Ate	2376381	[+] 23763 20.3		Luc	2355481	[–] 23554 17.2		
			Ate	82029300			Luc	82037300			
			Ate	82062900			Luc	82063300			
			Ate	82071800			PRO	92137003	ø 288 x 12 x 35.8		
			PRO	92106703	ø 320 x 30 x 46.5						
			PRO	92106705	ø 320 x 30 x 46.5						
		28100	Ate	2193801	[+] 21938 20.4	⊕ J	Luc	2391401	[o] 23914 17.2		
2.4	04/02→12/05	120 / 163									
2.4	04/02→12/05	125 / 170									
2.5 TDI	08/02→12/05	120 / 163	Ate	2193881	[+] 21938 20.4	⊕ J	Luc	2391481	[o] 23914 17.2		
3.0	04/02→12/05	162 / 220									
3.0 quattro	05/03→12/05	162 / 220	Ate	2301802	[+] 23018 20.4	⊖ J	Luc	82509000			
			Ate	2301881	[+] 23018 20.4	⊖ J	Luc	82063300			

AUDI

AUDI

		kW / hp									
A4 Convertible (8H7, B6, 8HE, B7) 04/02→03/09											
		28100	Ate	82029300				PRO	92106303	ø 255 x 12 x 39.9	
2.4	04/02→12/05	120 / 163									
2.4	04/02→12/05	125 / 170	Ate	82062900							
2.5 TDI	08/02→12/05	120 / 163									
3.0	04/02→12/05	162 / 220									
3.0 quattro	05/03→12/05	162 / 220	PRO	92106103	ø 312 x 25 x 46.4						
			PRO	92106105	ø 312 x 25 x 46.4						
		28200	Ate	2376302	[+] 23763 20.3		Luc		2391401	[o] 23914 17.2	
2.7 TDI	06/06→03/09	132 / 180									
3.0 TDI quattro	01/06→03/09	150 / 204									
3.0 TDI quattro	01/06→03/09	171 / 233	Ate	2376381	[+] 23763 20.3		Luc	epad	2391481	[o] 23914 17.2	
3.2 FSI	01/06→03/09	188 / 255									
3.2 FSI quattro	01/06→03/09	188 / 255	Ate	82062900			Luc		82509000		
			Ate	82071800			Luc		82063300		
			PRO	92106703	ø 320 x 30 x 46.5			PRO	92137003	ø 288 x 12 x 35.8	
			PRO	92106705	ø 320 x 30 x 46.5						
		28300	Ate	2193801	[+] 21938 20.4	⊕ J	Luc		2355402	[–] 23554 17.2	
3.0	04/02→12/05	160 / 218									
			Ate	2193881	[+] 21938 20.4	⊕ J	Luc	epad	2355481	[–] 23554 17.2	
			Ate	2301802	[+] 23018 20.4	⊖ J	Luc		2391401	[o] 23914 17.2	
			Ate	2301881	[+] 23018 20.4	⊖ J	Luc	epad	2391481	[o] 23914 17.2	
			Ate	82029300			Luc		82037300		
			Ate	82062900			Luc		82063300		
			PRO	92106103	ø 312 x 25 x 46.4			PRO	92106303	ø 255 x 12 x 39.9	
			PRO	92106105	ø 312 x 25 x 46.4						
		28400	Bre	2451701	[+] 24517 16.7	PR 1LP Ø 365 mm ⊖ ceramic brake	Luc		2332601	[–] 23326 17.7	
RS4 quattro	06/06→03/09	309 / 420									
							Luc	epad	2332681	[–] 23326 17.7	
							Luc		82054900		
		28500	Ate	2395001	[+] 23950 20.3		Luc		2332601	[–] 23326 17.7	
S4 quattro	03/04→03/09	253 / 344									
			Ate	2395081	[+] 23950 20.3		Luc	epad	2332681	[–] 23326 17.7	
			Ate	82062900			Luc		82054900		
				92143900	ø 345 x 30 x 46.3		Luc		82063300		
			PRO	92143903	ø 345 x 30 x 46.3			PRO	92137103	ø 300 x 22 x 35.9	
A4 Saloon (8D2, B5) 11/94→09/01 → A4 (8D2, B5), Page 30											
A4 Saloon (8EC, B7) 11/04→06/08 → A4 (8EC, B7), Page 33											
A4 Saloon (8K2, B8) 11/07→ → A4 (8K2, B8), Page 34											
A4 Stufenheck (8D2, B5) 11/94→09/01 → A4 (8D2, B5), Page 30											
A4 Stufenheck (8EC, B7) 11/04→06/08 → A4 (8EC, B7), Page 33											
A4 Stufenheck (8K2, B8) 11/07→ → A4 (8K2, B8), Page 34											
A5 (8T3) 06/07→12/11											
		28600	Ate	2470601	[+] 24706 20		Luc		2460602	[–] 24606 17.7	
1.8 TFSI	10/07→	125 / 170									
1.8 TFSI	05/09→	118 / 160									
2.0 TDI	08/08→	120 / 163	Ate	2470681	[+] 24706 20		Luc	epad	2460682	[–] 24606 17.7	
2.0 TDI	08/08→	125 / 170									
2.0 TDI	10/11→	130 / 177	Ate	82062900			Luc		82514200		
2.0 TDI quattro	08/08→	125 / 170									
2.0 TDI quattro	12/11→	130 / 177									
2.0 TFSI	11/08→	132 / 180	Ate	82076800				PRO	92160103	ø 300 x 12 x 36.2	
			PRO	92159903	ø 314 x 25 x 52				TPM0008		
				TPM0008							
		28700	Luc	2460601	[–] 24606 17.7	PR 1KE,1KP	Luc		2460602	[–] 24606 17.7	PR 1KW,2EH
2.0 TDI	09/13→	140 / 190									
2.0 TDI quattro	09/13→	140 / 190									
2.0 TFSI	05/13→	165 / 224	Ate	2470601	[+] 24706 20	PR 1LT,1LY	Luc	epad	2460681	[–] 24606 17.7	PR 1KE,1KP
2.0 TFSI quattro	05/13→	165 / 224									
			Ate	2470681	[+] 24706 20	PR 1LT,1LY	Luc	epad	2460682	[–] 24606 17.7	PR 1KW,2EH

→

30 kW / hp										
A5 (8T3) 06/07→12/11										
28700										
2.0 TDI 09/13→ 140 / 190	Luc		2474301	[+] 24743 19.4	PR 1LA,1LB,1LJ,1LD	Luc		82054900		PR 1KE,1KP
2.0 TDI quattro 09/13→ 140 / 190	Luc	epad	2474381	[+] 24743 19.4	PR 1LA,1LB,1LJ,1LD		PRO	92160103	ø 300 x 12 x 36.2	PR 1KW,2EH
2.0 TFSI 05/13→ 165 / 224	Ate		82076800		PR 1LT,1LY		PRO	92238303	ø 330 x 22 x 36.2	PR 1KE,1KP
2.0 TFSI quattro 05/13→ 165 / 224	Luc		82518300		PR 1LA,1LB,1LJ,1LD			TPM0008		
		PRO	92159903	ø 314 x 25 x 52	PR 1LT,1LY					
		PRO	92229203	ø 345 x 30 x 52	PR 1ILJ,1LD →2013-08					
		PRO	92229303	ø 320 x 30 x 52.4	PR 1LA,1LB					
			TPM0008							
28800										
2.0 TFSI 06/08→ 155 / 211	Luc		2474301	[+] 24743 19.4		Luc		2460602	[–] 24606 17.7	
2.0 TFSI quattro 06/08→ 155 / 211	Luc	epad	2474381	[+] 24743 19.4		Luc	epad	2460682	[–] 24606 17.7	
2.7 TDI 06/07→ 140 / 190	Luc		82518300		→2011-06-20	Luc		82514200		
2.7 TDI 09/07→ 120 / 163		PRO	92160003	ø 320 x 29.8 x 52.1	→2011-06-20		PRO	92160103	ø 300 x 12 x 36.2	
3.0 TDI quattro 06/07→ 176 / 240		PRO	92229303	ø 320 x 30 x 52.4	2011-06-20→			TPM0008		
3.0 TDI quattro 03/08→ 155 / 211			TPM0008							
3.2 FSI quattro 06/07→ 195 / 265										
28900										
2.0 TFSI quattro 03/12→ 162 / 220	Luc		2474301	[+] 24743 19.4		Luc		2460602	[–] 24606 17.7	
	Luc	epad	2474381	[+] 24743 19.4		Luc	epad	2460682	[–] 24606 17.7	
	Luc		82518300				PRO	92160103	ø 300 x 12 x 36.2	
		PRO	92229303	ø 320 x 30 x 52.4				TPM0008		
			TPM0008							
29000										
3.0 TDI 10/11→ 150 / 204	Luc		2474301	[+] 24743 19.4		Luc		2460602	[–] 24606 17.7	
3.0 TDI quattro 10/11→ 180 / 245	Luc	epad	2474381	[+] 24743 19.4		Luc	epad	2460682	[–] 24606 17.7	
	Luc		82518300			Luc		82514200		
		PRO	92229303	ø 320 x 30 x 52.4			PRO	92160103	ø 300 x 12 x 36.2	
			TPM0008					TPM0008		
29100										
3.0 TFSI quattro 12/11→ 200 / 272	Luc		2474301	[+] 24743 19.4		Luc		2460601	[–] 24606 17.7	
	Luc	epad	2474381	[+] 24743 19.4		Luc	epad	2460681	[–] 24606 17.7	
	Luc		82518300			Luc		82054900		
		PRO	92229203	ø 345 x 30 x 52			PRO	92238303	ø 330 x 22 x 36.2	
			TPM0008					TPM0008		
29200										
3.2 FSI 06/07→ 195 / 265	Luc		2474301	[+] 24743 19.4		Luc		2460602	[–] 24606 17.7	
	Luc	epad	2474381	[+] 24743 19.4		Luc	epad	2460682	[–] 24606 17.7	
	Luc		82518300			Luc		82514200		
		PRO	92160003	ø 320 x 29.8 x 52.1	→2011-06-20		PRO	92160103	ø 300 x 12 x 36.2	
		PRO	92229303	ø 320 x 30 x 52.4	2011-06-20→			TPM0008		
			TPM0008							
29300										
3.2 quattro 09/07→12/10 190 / 258	Luc		2474301	[+] 24743 19.4		Luc		2460602	[–] 24606 17.7	
	Luc	epad	2474381	[+] 24743 19.4		Luc	epad	2460682	[–] 24606 17.7	
			98034800	L300			PRO	92160103	ø 300 x 12 x 36.2	
	Luc		82518300					TPM0008		
		PRO	92160003	ø 320 x 29.8 x 52.1						

AUDI

AUDI

		kW / hp										
A5 (8T3) 06/07→12/11												
3.2 quattro	09/07→12/10	29300 190 / 258			TPM0008							
RS 5 quattro	03/10→	29400 331 / 450	Bre		2488801	[+] 24888 16.7	⊖ ceramic brake	Luc		2460601	[–] 24606 17.7	
								Luc	epad	2460681	[–] 24606 17.7	
								Luc		82054900		
										TPM0008		
S5 quattro	06/07→	29500 260 / 354	Luc		2474301	[+] 24743 19.4		Luc		2460601	[–] 24606 17.7	
			Luc	epad	2474381	[+] 24743 19.4		Luc	epad	2460681	[–] 24606 17.7	
			Luc		82518300		→2011-06-20	Luc		82054900		
				PRO	92160203	ø 345 x 29.3 x 51.8	→2011-06-20		PRO	92160303	ø 330 x 22 x 36.2	
				PRO	92229203	ø 345 x 30 x 52	2011-06-20→			TPM0008		
					TPM0008							
S5 quattro	06/07→12/11	29600 253 / 344	Luc		2474301	[+] 24743 19.4		Luc		2460601	[–] 24606 17.7	
			Luc	epad	2474381	[+] 24743 19.4		Luc	epad	2460681	[–] 24606 17.7	
					98034800	L300		Luc		82054900		
			Luc		82518300				PRO	92160303	ø 330 x 22 x 36.2	
				PRO	92160203	ø 345 x 29.3 x 51.8				TPM0008		
					TPM0008							
S5 quattro	10/11→	29700 245 / 333	Luc		2474301	[+] 24743 19.4		Luc		2460601	[–] 24606 17.7	
			Luc	epad	2474381	[+] 24743 19.4		Luc	epad	2460681	[–] 24606 17.7	
			Luc		82518300			Luc		82054900		
				PRO	92229203	ø 345 x 30 x 52			PRO	92160303	ø 330 x 22 x 36.2	
					TPM0008					TPM0008		
A5 Cabriolet (8F7) 03/09→ → A5 Convertible (8F7), Page 46												
A5 Convertible (8F7) 03/09→												
1.8 TFSI	09/09→	29800 118 / 160	Ate		2470601	[+] 24706 20		Luc		2460602	[–] 24606 17.7	
1.8 TFSI	10/11→	125 / 170										
2.0 TDI	05/09→	120 / 163	Ate	epad	2470681	[+] 24706 20		Luc	epad	2460682	[–] 24606 17.7	
2.0 TDI	05/09→	125 / 170										
2.0 TDI	10/11→	105 / 143	Ate		82062900			Luc		82514200		
2.0 TDI	10/11→	130 / 177										
2.0 TDI quattro	01/12→	130 / 177	Ate		82076800				PRO	92160103	ø 300 x 12 x 36.2	
2.0 TFSI	03/09→	132 / 180		PRO	92159903	ø 314 x 25 x 52				TPM0008		
					TPM0008							
2.0 TDI	05/13→	29900 110 / 150	Luc		2460601	[–] 24606 17.7	PR 1KE,1KP	Luc		2460602	[–] 24606 17.7	PR 1KW,2EH
2.0 TDI	09/13→	140 / 190										
2.0 TDI quattro	09/13→	140 / 190	Ate		2470601	[+] 24706 20	PR 1LT,1LY	Luc	epad	2460681	[–] 24606 17.7	PR 1KE,1KP
2.0 TFSI	05/13→	165 / 224										
2.0 TFSI quattro	05/13→	165 / 224	Ate	epad	2470681	[+] 24706 20	PR 1LT,1LY	Luc	epad	2460682	[–] 24606 17.7	PR 1KW,2EH
			Luc		2474301	[+] 24743 19.4	PR 1LA,1LB,1LJ,1LD	Luc		82054900		PR 1KE,1KP
			Luc	epad	2474381	[+] 24743 19.4	PR 1LA,1LB,1LJ,1LD		PRO	92160103	ø 300 x 12 x 36.2	PR 1KW,2EH
			Ate		82076800		PR 1LT,1LY		PRO	92238303	ø 330 x 22 x 36.2	PR 1KE,1KP
			Luc		82518300		PR 1LA,1LB,1LJ,1LD			TPM0008		
				PRO	92159903	ø 314 x 25 x 52	PR 1LT,1LY					
				PRO	92229203	ø 345 x 30 x 52	PR 1ILJ,1LD →2013-08					
				PRO	92229303	ø 320 x 30 x 52.4	PR 1LA,1LB					

→

		kW / hp											
A5 Convertible (8F7) 03/09→													
		29900		TPM0008									
2.0 TDI	05/13→	110 / 150											
2.0 TDI	09/13→	140 / 190											
2.0 TDI quattro	09/13→	140 / 190											
2.0 TFSI	05/13→	165 / 224											
2.0 TFSI quattro	05/13→	165 / 224											
		30000	Luc	2474301	[+] 24743	19.4		Luc	2460602	[–] 24606	17.7		
2.0 TFSI	03/09→	155 / 211											
2.0 TFSI quattro	03/09→	155 / 211	Luc	2474381	[+] 24743	19.4		Luc	2460682	[–] 24606	17.7		
2.7 TDI	03/09→	140 / 190											
2.7 TDI	05/09→	120 / 163											
3.0 TDI quattro	03/09→	176 / 240	Luc	82518300			→2011-06-20	Luc	82514200				
3.2 FSI	03/09→	195 / 265											
3.2 FSI quattro	03/09→	195 / 265		92160003	ø 320 x 29.8 x 52.1		→2011-06-20		92160103	ø 300 x 12 x 36.2			
				92229303	ø 320 x 30 x 52.4		2011-06-20→		TPM0008				
				TPM0008									
		30100	Luc	2474301	[+] 24743	19.4		Luc	2460602	[–] 24606	17.7		
2.0 TFSI	05/13→	162 / 220											
2.0 TFSI quattro	03/12→	162 / 220	Luc	2474381	[+] 24743	19.4		Luc	2460682	[–] 24606	17.7		
			Luc	82518300					92160103	ø 300 x 12 x 36.2			
				92229303	ø 320 x 30 x 52.4				TPM0008				
				TPM0008									
		30200	Luc	2474301	[+] 24743	19.4		Luc	2460602	[–] 24606	17.7		
3.0 TDI	10/11→	150 / 204											
3.0 TDI quattro	10/11→	180 / 245	Luc	2474381	[+] 24743	19.4		Luc	2460682	[–] 24606	17.7		
			Luc	82518300				Luc	82514200				
				92229303	ø 320 x 30 x 52.4				92160103	ø 300 x 12 x 36.2			
				TPM0008					TPM0008				
		30300	Luc	2474301	[+] 24743	19.4		Luc	2460601	[–] 24606	17.7		
3.0 TFSI quattro	11/11→	200 / 272											
			Luc	2474381	[+] 24743	19.4		Luc	2460681	[–] 24606	17.7		
			Luc	82518300				Luc	82054900				
				92229203	ø 345 x 30 x 52				92238303	ø 330 x 22 x 36.2			
				TPM0008					TPM0008				
		30400	Bre	2488801	[+] 24888	16.7	⊖ ceramic brake	Luc	2460601	[–] 24606	17.7		
RS 5 quattro	02/13→	331 / 450											
								Luc	2460681	[–] 24606	17.7		
								Luc	82054900				
									TPM0008				
		30500	Luc	2474301	[+] 24743	19.4		Luc	2460601	[–] 24606	17.7		
S5 quattro	06/09→	245 / 333											
			Luc	2474381	[+] 24743	19.4		Luc	2460681	[–] 24606	17.7		
			Luc	82518300			→2011-06-20	Luc	82054900				
				92160203	ø 345 x 29.3 x 51.8		→2011-06-20		92160303	ø 330 x 22 x 36.2			
				92229203	ø 345 x 30 x 52		2011-06-20→		TPM0008				
				TPM0008									
A5 Sportback (8TA) 09/07→12/11													
		30600	Ate	2470601	[+] 24706	20		Luc	2460602	[–] 24606	17.7		
1.8 TFSI	11/09→	118 / 160											
1.8 TFSI	08/11→	125 / 170	Ate	2470681	[+] 24706	20		Luc	2460682	[–] 24606	17.7		
2.0 TDI	09/09→	100 / 136											
2.0 TDI	09/09→	105 / 143											
2.0 TDI	09/09→	120 / 163	Ate	82062900				Luc	82514200				
2.0 TDI	09/09→	125 / 170											
2.0 TDI	10/11→	130 / 177	Ate	82076800					92160103	ø 300 x 12 x 36.2			
2.0 TDI quattro	09/09→	125 / 170											
2.0 TDI quattro	12/11→	130 / 177		92159903	ø 314 x 25 x 52				TPM0008				
2.0 TFSI	09/09→	132 / 180											
				TPM0008									

AUDI

AUDI

A5 Sportback (8TA) 09/07→12/11

			kW / hp											
			30700	Luc		2460601	[–] 24606 17.7	PR 1KE,1KP	Luc		2460602	[–] 24606 17.7	PR 1KW,2EH
2.0 TDI	05/13→	110 / 150											
2.0 TDI	09/13→	140 / 190		Ate		2470601	[+] 24706 20	PR 1LT,1LY	Luc	epad	2460681	[–] 24606 17.7	PR 1KE,1KP
2.0 TDI quattro	09/13→	140 / 190											
2.0 TFSI	05/13→	165 / 224		Ate	epad	2470681	[+] 24706 20	PR 1LT,1LY	Luc	epad	2460682	[–] 24606 17.7	PR 1KW,2EH
2.0 TFSI quattro	05/13→	165 / 224											
				Luc		2474301	[+] 24743 19.4	PR 1LA,1LB,1LJ,1LD	Luc		82054900		PR 1KE,1KP
				Luc	epad	2474381	[+] 24743 19.4	PR 1LA,1LB,1LJ,1LD		PRO	92160103	ø 300 x 12 x 36.2	PR 1KW,2EH
				Ate		82076800		PR 1LT,1LY		PRO	92238303	ø 330 x 22 x 36.2	PR 1KE,1KP
				Luc		82518300		PR 1LA,1LB,1LJ,1LD			TPM0008		
					PRO	92159903	ø 314 x 25 x 52	PR 1LT,1LY					
					PRO	92229203	ø 345 x 30 x 52	PR 1ILJ,1LD →2013-08					
					PRO	92229303	ø 320 x 30 x 52.4	PR 1LA,1LB					
						TPM0008							
			30800	Luc		2474301	[+] 24743 19.4		Luc		2460602	[–] 24606 17.7	
2.0 TFSI	09/09→	155 / 211											
2.0 TFSI quattro	09/09→	155 / 211		Luc	epad	2474381	[+] 24743 19.4		Luc	epad	2460682	[–] 24606 17.7	
2.7 TDI	09/09→	120 / 163											
2.7 TDI	09/09→	140 / 190		Luc		82518300		→2011-06-20	Luc		82514200		
3.0 TDI quattro	09/09→	176 / 240											
3.2 FSI quattro	09/09→	195 / 265			PRO	92160003	ø 320 x 29.8 x 52.1	→2011-06-20		PRO	92160103	ø 300 x 12 x 36.2	
					PRO	92229303	ø 320 x 30 x 52.4	2011-06-20→			TPM0008		
						TPM0008							
			30900	Luc		2474301	[+] 24743 19.4		Luc		2460602	[–] 24606 17.7	
3.0 TDI	10/11→	150 / 204											
3.0 TDI quattro	10/11→	180 / 245		Luc	epad	2474381	[+] 24743 19.4		Luc	epad	2460682	[–] 24606 17.7	
				Luc		82518300			Luc		82514200		
					PRO	92229303	ø 320 x 30 x 52.4			PRO	92160103	ø 300 x 12 x 36.2	
						TPM0008					TPM0008		
			31000	Luc		2474301	[+] 24743 19.4		Luc		2460601	[–] 24606 17.7	
3.0 TFSI quattro	12/11→	200 / 272											
				Luc	epad	2474381	[+] 24743 19.4		Luc	epad	2460681	[–] 24606 17.7	
				Luc		82518300			Luc		82054900		
					PRO	92229203	ø 345 x 30 x 52			PRO	92238303	ø 330 x 22 x 36.2	
						TPM0008					TPM0008		
			31100	Ate		2470601	[+] 24706 20	PR 1LT	Luc		2460602	[–] 24606 17.7	
3.2 quattro	09/07→12/10	190 / 258											
				Ate	epad	2470681	[+] 24706 20	PR 1LT	Luc	epad	2460682	[–] 24606 17.7	
				Luc		2474301	[+] 24743 19.4	PR 1LA		PRO	92160103	ø 300 x 12 x 36.2	
				Luc	epad	2474381	[+] 24743 19.4	PR 1LA			TPM0008		
				Ate		82076800		PR 1LT					
				Luc		82518300		PR 1LA					
					PRO	92159903	ø 314 x 25 x 52	PR 1LT					
					PRO	92160003	ø 320 x 29.8 x 52.1	PR 1LA					
						TPM0008							
			31200	Luc		2474301	[+] 24743 19.4		Luc		2460601	[–] 24606 17.7	
S5 quattro	09/07→12/11	253 / 344											
				Luc	epad	2474381	[+] 24743 19.4		Luc	epad	2460681	[–] 24606 17.7	
				Luc		82518300			Luc		82054900		
					PRO	92160203	ø 345 x 29.3 x 51.8	PR 1LJ →2011-06		PRO	92160303	ø 330 x 22 x 36.2	→2010-11

→

		kW / hp											
A5 Sportback (8TA) 09/07→12/11													
31200				TPM0008					PRO	92238303	ø 330 x 22 x 36.2	2010-11→	
S5 quattro	09/07→12/11	253 / 344								TPM0008			
31300			Luc	2474301	[+] 24743 19.4		Luc		2460601	[–] 24606 17.7			
S5 quattro	01/10→	245 / 333	Luc	2474381	[+] 24743 19.4		Luc		2460681	[–] 24606 17.7			
			Luc	82518300		→2011-06-20	Luc		82054900				
				PRO 92160203	ø 345 x 29.3 x 51.8	→2011-06-20		PRO	92160303	ø 330 x 22 x 36.2			
				PRO 92229203	ø 345 x 30 x 52	2011-06-20→			TPM0008				
				TPM0008									
A6 (4B2, C5) 01/97→01/05													
31400			Ate	2193801	[+] 21938 20.4	→4B-X-070000 ⊕ J	Luc		2355401	[–] 23554 15.2	4B-2-000001→ 2001-06-01→		
1.8	05/97→01/05	85 / 116											
1.8	07/97→01/05	92 / 125	Ate	2193881	[+] 21938 20.4	→4B-X-070000 ⊕ J	Luc		2355402	[–] 23554 17.2	→4B-1-200000 →2001-04-30		
			Ate	2301802	[+] 23018 20.4	4B-X-070001→	Luc		2355481	[–] 23554 17.2	→4B-1-200000 →2001-04-30		
			Ate	2301881	[+] 23018 20.4	4B-X-070001→	Luc		2355482	[–] 23554 15.2	4B-2-000001→ 2001-06-01→		
			Ate	82029300			Luc		82037300				
			Ate	82062900			Luc		82063300				
								PRO	92057503	ø 245 x 10 x 63.9			
31500			Ate	2193801	[+] 21938 20.4	→4B-X-070000 ⊕ J PR 1LB,1LE,1LF,1LT	Luc		2355401	[–] 23554 15.2	4B-2-000001→ 2001-06-01→		
1.8 T	01/97→01/05	110 / 150											
1.8 T	12/97→01/05	132 / 180	Ate	2193881	[+] 21938 20.4	→4B-X-070000 ⊕ J PR 1LB,1LE,1LF,1LT	Luc		2355402	[–] 23554 17.2	→4B-1-200000 →2001-04-30		
			Ate	2301802	[+] 23018 20.4	4B-X-070001→	Luc		2355481	[–] 23554 17.2	→4B-1-200000 →2001-04-30		
			Ate	2301881	[+] 23018 20.4	4B-X-070001→	Luc		2355482	[–] 23554 15.2	4B-2-000001→ 2001-06-01→		
			Ate	82029300			Luc		82037300				
			Ate	82062900			Luc		82063300				
				PRO 92106103	ø 312 x 25 x 46.4	PR 1LF,1LT		PRO	92057503	ø 245 x 10 x 63.9			
				PRO 92106105	ø 312 x 25 x 46.4	PR 1LF,1LT							
31600			Ate	2193801	[+] 21938 20.4	→4B-X-070000 ⊕ J PR 1LB,1LE,1LF,1LT	Luc		2355401	[–] 23554 15.2	4B-2-000001→ 2001-06-01→		
1.8 T quattro	02/97→01/05	110 / 150											
1.8 T quattro	12/97→01/05	132 / 180	Ate	2193881	[+] 21938 20.4	→4B-X-070000 ⊕ J PR 1LB,1LE,1LF,1LT	Luc		2355402	[–] 23554 17.2	→4B-1-200000 →2001-04-30		
			Ate	2301802	[+] 23018 20.4	4B-X-070001→	Luc		2355481	[–] 23554 17.2	→4B-1-200000 →2001-04-30		
			Ate	2301881	[+] 23018 20.4	4B-X-070001→	Luc		2355482	[–] 23554 15.2	4B-2-000001→ 2001-06-01→		
			Ate	82029300			Luc		82037300				
			Ate	82062900			Luc		82063300				
				PRO 92106103	ø 312 x 25 x 46.4	PR 1LF,1LT			92090800	ø 245 x 10 x 53.9	PR 0N1		
				PRO 92106105	ø 312 x 25 x 46.4	PR 1LF,1LT		PRO	92090803	ø 245 x 10 x 53.9	PR 0N1		
								PRO	92104103	ø 255 x 9.9 x 53.8	PR 0N5		
								PRO	92117303	ø 255 x 10 x 48	PR 0N6		
31700			Ate	2193801	[+] 21938 20.4	→4B-X-070000 ⊕ J	Luc		2355402	[–] 23554 17.2			
1.9 TDI	04/97→10/00	81 / 110											
1.9 TDI	07/00→01/05	85 / 115	Ate	2193881	[+] 21938 20.4	→4B-X-070000 ⊕ J	Luc		2355481	[–] 23554 17.2			
			Ate	2301802	[+] 23018 20.4	4B-X-070001→	Luc		82037300				
			Ate	2301881	[+] 23018 20.4	4B-X-070001→	Luc		82063300				
			Ate	82029300				PRO	92057503	ø 245 x 10 x 63.9			
			Ate	82062900									

AUDI

AUDI

A6 (4B2, C5) 01/97→01/05

		kW / hp												
		31800	Ate		2193801	[+] 21938 20.4	⊕ J		Luc		2355401	[–] 23554 15.2	
1.9 TDI	08/01→01/05	96 / 130	Ate		2193881	[+] 21938 20.4	⊕ J		Luc		2355482	[–] 23554 15.2	
			Ate		2301802	[+] 23018 20.4	⊖ J		Luc		82037300		
			Ate		2301881	[+] 23018 20.4	⊖ J		Luc		82063300		
			Ate		82029300					PRO	92057503	ø 245 x 10 x 63.9	
			Ate		82062900								
		31900	Ate		2193801	[+] 21938 20.4	⊕ J PR 1LB,1LE		Luc		2355401	[–] 23554 15.2	
2.0	08/01→01/05	96 / 130	Ate		2193881	[+] 21938 20.4	⊕ J PR 1LB,1LE		Luc		2355482	[–] 23554 15.2	
			Ate		2301802	[+] 23018 20.4	⊖ J PR 1LF,1LT		Luc		82037300		
			Ate		2301881	[+] 23018 20.4	⊖ J PR 1LF,1LT		Luc		82063300		
			Ate		82029300					PRO	92057503	ø 245 x 10 x 63.9	
			Ate		82062900								
				PRO	92106103	ø 312 x 25 x 46.4	PR 1LF,1LT						
				PRO	92106105	ø 312 x 25 x 46.4	PR 1LF,1LT						
		32000	Ate		2193801	[+] 21938 20.4	→4B-X-070000 ⊕ J		Luc		2355401	[–] 23554 15.2	4B-2-000001→ 2001-06-01→
2.4	02/97→01/05	115 / 156											
2.4	02/97→01/05	120 / 163	Ate		2193881	[+] 21938 20.4	→4B-X-070000 ⊕ J		Luc		2355402	[–] 23554 17.2	→4B-1-200000 →2001-04-30
2.4	02/97→01/05	121 / 165											
2.4	07/98→01/05	100 / 136	Ate		2301802	[+] 23018 20.4	4B-X-070001→		Luc		2355481	[–] 23554 17.2	→4B-1-200000 →2001-04-30
2.8	02/97→01/05	142 / 193	Ate		2301881	[+] 23018 20.4	4B-X-070001→		Luc		2355482	[–] 23554 15.2	4B-2-000001→ 2001-06-01→
			Ate		82029300				Luc		82037300		
			Ate		82062900				Luc		82063300		
				PRO	92106103	ø 312 x 25 x 46.4				PRO	92057503	ø 245 x 10 x 63.9	
				PRO	92106105	ø 312 x 25 x 46.4							
		32100	Ate		2193801	[+] 21938 20.4	⊕ J		Luc		2355401	[–] 23554 15.2	
2.4	08/01→01/05	125 / 170											
2.5 TDI	07/02→01/05	120 / 163	Ate		2193881	[+] 21938 20.4	⊕ J		Luc		2355482	[–] 23554 15.2	
			Ate		2301802	[+] 23018 20.4	⊖ J		Luc		82037300		
			Ate		2301881	[+] 23018 20.4	⊖ J		Luc		82063300		
			Ate		82029300					PRO	92057503	ø 245 x 10 x 63.9	
			Ate		82062900								
				PRO	92106103	ø 312 x 25 x 46.4							
				PRO	92106105	ø 312 x 25 x 46.4							
		32200	Ate		2193801	[+] 21938 20.4	→4B-X-070000 ⊕ J		Luc		2355401	[–] 23554 15.2	4B-2-000001→ 2001-06-01→
2.4 quattro	02/97→01/05	120 / 163											
2.4 quattro	02/97→01/05	121 / 165	Ate		2193881	[+] 21938 20.4	→4B-X-070000 ⊕ J		Luc		2355402	[–] 23554 17.2	→4B-1-200000 →2001-04-30
2.5 TDI quattro	07/97→01/05	110 / 150											
2.8 quattro	02/97→01/05	142 / 193	Ate		2301802	[+] 23018 20.4	4B-X-070001→		Luc		2355481	[–] 23554 17.2	→4B-1-200000 →2001-04-30
			Ate		2301881	[+] 23018 20.4	4B-X-070001→		Luc		2355482	[–] 23554 15.2	4B-2-000001→ 2001-06-01→
			Ate		82029300				Luc		82037300		
			Ate		82062900				Luc		82063300		
				PRO	92106103	ø 312 x 25 x 46.4					92090800	ø 245 x 10 x 53.9	PR 0N1
				PRO	92106105	ø 312 x 25 x 46.4				PRO	92090803	ø 245 x 10 x 53.9	PR 0N1
										PRO	92104103	ø 255 x 9.9 x 53.8	PR 0N5
										PRO	92117303	ø 255 x 10 x 48	PR 0N6

→

A6 (4B2, C5) 01/97→01/05

		kW / hp											
		32300	Ate		2193801	[+] 21938 20.4	→4B·X·070000 ⊕ J	Luc		2355402	[–] 23554 17.2	
2.4 quattro	08/98→07/99	115 / 156										
2.8 quattro	01/98→04/00	132 / 180	Ate	epad	2193881	[+] 21938 20.4	→4B·X·070000 ⊕ J	Luc	epad	2355481	[–] 23554 17.2	
			Ate		2301802	[+] 23018 20.4	4B·X·070001→	Luc		82037300		
			Ate	epad	2301881	[+] 23018 20.4	4B·X·070001→	Luc		82063300		
			Ate		82029300					92090800	ø 245 x 10 x 53.9	PR 0N1
			Ate		82062900				PRO	92090803	ø 245 x 10 x 53.9	PR 0N1
				PRO	92106103	ø 312 x 25 x 46.4			PRO	92104103	ø 255 x 9.9 x 53.8	PR 0N5
				PRO	92106105	ø 312 x 25 x 46.4			PRO	92117303	ø 255 x 10 x 48	PR 0N6
		32400	Ate		2193801	[+] 21938 20.4	⊕ J	Luc		2355401	[–] 23554 15.2	
2.4 quattro	08/01→01/05	125 / 170	Ate	epad	2193881	[+] 21938 20.4	⊕ J	Luc	epad	2355482	[–] 23554 15.2	
			Ate		2301802	[+] 23018 20.4	⊖ J	Luc		82037300		
			Ate	epad	2301881	[+] 23018 20.4	⊖ J	Luc		82063300		
			Ate		82029300					92090800	ø 245 x 10 x 53.9	PR 0N1
			Ate		82062900				PRO	92090803	ø 245 x 10 x 53.9	PR 0N1
				PRO	92106103	ø 312 x 25 x 46.4			PRO	92104103	ø 255 x 9.9 x 53.8	PR 0N5
				PRO	92106105	ø 312 x 25 x 46.4			PRO	92117303	ø 255 x 10 x 48	PR 0N6
		32500	Ate		2193801	[+] 21938 20.4	→4B·X·070000 ⊕ J PR 1LB,1LE	Luc		2355401	[–] 23554 15.2	4B·2·000001→ 2001·06·01→
2.5 TDI	07/97→01/05	110 / 150	Ate	epad	2193881	[+] 21938 20.4	→4B·X·070000 ⊕ J PR 1LB,1LE	Luc	epad	2355402	[–] 23554 17.2	→4B·1·200000 →2001·04·30
			Ate		2301802	[+] 23018 20.4	4B·X·070001→ PR 1LT,1LF	Luc	epad	2355481	[–] 23554 17.2	→4B·1·200000 →2001·04·30
			Ate	epad	2301881	[+] 23018 20.4	4B·X·070001→ PR 1LT,1LF	Luc	epad	2355482	[–] 23554 15.2	4B·2·000001→ 2001·06·01→
			Ate		82029300			Luc		82037300		
			Ate		82062900			Luc		82063300		
				PRO	92106103	ø 312 x 25 x 46.4	PR 1LT,1LF		PRO	92057503	ø 245 x 10 x 63.9	
				PRO	92106105	ø 312 x 25 x 46.4	PR 1LT,1LF					
		32600	Ate		2193801	[+] 21938 20.4	⊕ J	Luc		2355401	[–] 23554 15.2	4B·2·000001→ 2001·06·01→
2.5 TDI	02/00→01/05	132 / 180										
2.8	07/99→01/05	140 / 190	Ate	epad	2193881	[+] 21938 20.4	⊕ J	Luc		2355402	[–] 23554 17.2	→4B·1·200000 →2001·04·30
			Ate		2301802	[+] 23018 20.4	⊖ J	Luc	epad	2355481	[–] 23554 17.2	→4B·1·200000 →2001·04·30
			Ate	epad	2301881	[+] 23018 20.4	⊖ J	Luc	epad	2355482	[–] 23554 15.2	4B·2·000001→ 2001·06·01→
			Ate		82029300			Luc		82037300		
			Ate		82062900			Luc		82063300		
				PRO	92106103	ø 312 x 25 x 46.4			PRO	92057503	ø 245 x 10 x 63.9	
				PRO	92106105	ø 312 x 25 x 46.4						
		32700	Ate		2193801	[+] 21938 20.4	→4B·X·070000 ⊕ J	Luc		2355401	[–] 23554 15.2	
2.5 TDI	08/01→01/05	114 / 155	Ate	epad	2193881	[+] 21938 20.4	→4B·X·070000 ⊕ J	Luc	epad	2355482	[–] 23554 15.2	
			Ate		2301802	[+] 23018 20.4	4B·X·070001→	Luc		82037300		
			Ate	epad	2301881	[+] 23018 20.4	4B·X·070001→	Luc		82063300		
			Ate		82029300				PRO	92057503	ø 245 x 10 x 63.9	
			Ate		82062900							
				PRO	92106103	ø 312 x 25 x 46.4						
				PRO	92106105	ø 312 x 25 x 46.4						

AUDI

AUDI

		kW / hp												
A6 (4B2, C5)		**01/97→01/05**												
		32800	Ate		**2193801**	[+] 21938 20.4	⊕ J		Luc		**2355401**	[–] 23554 15.2	4B-2-000001→ 2001-06-01→
2.5 TDI quattro	02/00→01/05	132 / 180	Ate		**2193881**	[+] 21938 20.4	⊕ J		Luc		**2355402**	[–] 23554 17.2	→4B-1-200000 →2001-04-30
			Ate		**2301802**	[+] 23018 20.4	⊖ J		Luc		**2355481**	[–] 23554 17.2	→4B-1-200000 →2001-04-30
			Ate		**2301881**	[+] 23018 20.4	⊖ J		Luc		**2355482**	[–] 23554 15.2	4B-2-000001→ 2001-06-01→
			Ate		**82029300**				Luc		**82037300**		
			Ate		**82062900**				Luc		**82063300**		
				PRO	**92106103**	ø 312 x 25 x 46.4					**92090800**	ø 245 x 10 x 53.9	PR 0N1
				PRO	**92106105**	ø 312 x 25 x 46.4				PRO	**92090803**	ø 245 x 10 x 53.9	PR 0N1
										PRO	**92104103**	ø 255 x 9.9 x 53.8	PR 0N5
										PRO	**92117303**	ø 255 x 10 x 48	PR 0N6
		32900	Luc		**2328001**	[+] 23280 18.3			Luc		**2355401**	[–] 23554 15.2	
2.7	05/01→07/04	187 / 254		PRO	**92106703**	ø 320 x 30 x 46.5			Luc		**2355482**	[–] 23554 15.2	
				PRO	**92106705**	ø 320 x 30 x 46.5			Luc		**82037300**		
									Luc		**82063300**		
										PRO	**92057503**	ø 245 x 10 x 63.9	
		33000	Luc		**2328001**	[+] 23280 18.3			Luc		**2355401**	[–] 23554 15.2	
2.7 quattro	05/01→07/04	187 / 254							Luc		**2355482**	[–] 23554 15.2	
2.7 quattro	11/03→07/04	195 / 265		PRO	**92106703**	ø 320 x 30 x 46.5							
2.7 T quattro	08/01→01/05	184 / 250		PRO	**92106705**	ø 320 x 30 x 46.5			Luc		**82037300**		
									Luc		**82063300**		
										PRO	**92104103**	ø 255 x 9.9 x 53.8	PR 0N5
										PRO	**92117303**	ø 255 x 10 x 48	PR 0N6
		33100	Luc		**2328001**	[+] 23280 18.3			Luc		**2355401**	[–] 23554 15.2	4B-2-000001→ 2001-06-01→
2.7 T	02/99→01/05	169 / 230		PRO	**92106703**	ø 320 x 30 x 46.5			Luc		**2355402**	[–] 23554 17.2	→4B-1-200000 →2001-04-30
				PRO	**92106705**	ø 320 x 30 x 46.5			Luc		**2355481**	[–] 23554 17.2	→4B-1-200000 →2001-04-30
									Luc		**2355482**	[–] 23554 15.2	4B-2-000001→ 2001-06-01→
									Luc		**82037300**		
									Luc		**82063300**		
										PRO	**92057503**	ø 245 x 10 x 63.9	
		33200	Luc		**2145401**	[+] 21454 18.5	→4B-X-060000		Luc		**2355401**	[–] 23554 15.2	4B-2-000001→ 2001-06-01→
2.7 T quattro	12/97→01/05	169 / 230	Luc		**2328001**	[+] 23280 18.3	4B-X-060001→		Luc		**2355402**	[–] 23554 17.2	→4B-1-200000 →2001-04-30
				PRO	**92106703**	ø 320 x 30 x 46.5			Luc		**2355481**	[–] 23554 17.2	→4B-1-200000 →2001-04-30
				PRO	**92106705**	ø 320 x 30 x 46.5			Luc		**2355482**	[–] 23554 15.2	4B-2-000001→ 2001-06-01→
									Luc		**82037300**		
									Luc		**82063300**		
										PRO	**92104103**	ø 255 x 9.9 x 53.8	PR 0N5
										PRO	**92117303**	ø 255 x 10 x 48	PR 0N6
		33300	Ate		**2193801**	[+] 21938 20.4			Luc		**2355402**	[–] 23554 17.2	
2.8	10/97→05/00	132 / 180	Ate		**2193881**	[+] 21938 20.4			Luc		**2355481**	[–] 23554 17.2	
			Ate		**82029300**				Luc		**82037300**		
			Ate		**82062900**				Luc		**82063300**		

→

A6 (4B2, C5) 01/97→01/05

33300															
2.8	10/97→05/00	132 / 180		PRO	92106103	ø 312 x 25 x 46.4				PRO	92057503	ø 245 x 10 x 63.9	
				PRO	92106105	ø 312 x 25 x 46.4							
33400			Ate		2193801	[+] 21938 20.4	⊕J	Luc		2355402	[–] 23554 17.2	
2.8 quattro	07/99→05/01	140 / 190	Ate	epad	2193881	[+] 21938 20.4	⊕J	Luc	epad	2355481	[–] 23554 17.2	
			Ate		2301802	[+] 23018 20.4	⊖J	Luc		82037300		
			Ate	epad	2301881	[+] 23018 20.4	⊖J	Luc		82063300		
			Ate		82029300					92090800	ø 245 x 10 x 53.9	PR 0N1
			Ate		82062900				PRO	92090803	ø 245 x 10 x 53.9	PR 0N1
				PRO	92106103	ø 312 x 25 x 46.4			PRO	92104103	ø 255 x 9.9 x 53.8	PR 0N5
				PRO	92106105	ø 312 x 25 x 46.4			PRO	92117303	ø 255 x 10 x 48	PR 0N6
33500			Ate		2376201	[+] 23762 20.4		Luc		2355401	[–] 23554 15.2	
3.0	06/01→01/05	160 / 218										
3.0	08/01→01/05	162 / 220	Ate	epad	2376281	[+] 23762 20.4		Luc	epad	2355482	[–] 23554 15.2	
			Ate		82029300			Luc		82037300		
			Ate		82062900			Luc		82063300		
				PRO	92106703	ø 320 x 30 x 46.5			PRO	92057503	ø 245 x 10 x 63.9	
				PRO	92106705	ø 320 x 30 x 46.5						
33600			Ate		2376201	[+] 23762 20.4		Luc		2355401	[–] 23554 15.2	
3.0 quattro	06/01→07/04	160 / 218										
3.0 quattro	08/01→01/05	162 / 220	Ate	epad	2376281	[+] 23762 20.4		Luc	epad	2355482	[–] 23554 15.2	
			Ate		82029300			Luc		82037300		
			Ate		82062900			Luc		82063300		
				PRO	92106703	ø 320 x 30 x 46.5			PRO	92104103	ø 255 x 9.9 x 53.8	PR 0N5
				PRO	92106705	ø 320 x 30 x 46.5			PRO	92117303	ø 255 x 10 x 48	PR 0N6
33700			Ate		2376201	[+] 23762 20.4		Luc		2355401	[–] 23554 15.2	4B-2-000001→ 2001-06-01→
3.7	03/99→01/05	191 / 260										
3.7 quattro	03/99→01/05	191 / 260	Ate	epad	2376281	[+] 23762 20.4		Luc		2355402	[–] 23554 17.2	→4B-1-200000 →2001-04-30
			Ate		82029300			Luc	epad	2355481	[–] 23554 17.2	→4B-1-200000 →2001-04-30
			Ate		82062900			Luc	epad	2355482	[–] 23554 15.2	4B-2-000001→ 2001-06-01→
				PRO	92106703	ø 320 x 30 x 46.5		Luc		82037300		
				PRO	92106705	ø 320 x 30 x 46.5		Luc		82063300		
									PRO	92176803	ø 269 x 22 x 54	
33800			Luc		2145401	[+] 21454 18.5	→4B-X-060000	Luc		2355401	[–] 23554 15.2	4B-2-000001→ 2001-06-01→
4.2 quattro	11/98→01/05	220 / 299	Luc		2328001	[+] 23280 18.3	4B-X-060001→	Luc		2355402	[–] 23554 17.2	→4B-1-200000 →2001-04-30
				PRO	92106703	ø 320 x 30 x 46.5	PR 1LA,1LG	Luc	epad	2355481	[–] 23554 17.2	→4B-1-200000 →2001-04-30
				PRO	92106705	ø 320 x 30 x 46.5	PR 1LA,1LG	Luc	epad	2355482	[–] 23554 15.2	4B-2-000001→ 2001-06-01→
				PRO	92154703	ø 321 x 30 x 52.4	PR 1LA,1LG,T7Z	Luc		82037300		
								Luc		82063300		
									PRO	92176803	ø 269 x 22 x 54	
33900			Bre		2375101	[+] 23751 16.7		Luc		2332601	[–] 23326 17.7	
RS6 quattro	07/02→01/05	331 / 450						Luc	epad	2332681	[–] 23326 17.7	
								Luc		82054900		
								Luc		82063500		

AUDI

AUDI

		kW / hp										
A6 (4B2, C5) 01/97→01/05												
		34000	Luc	2328001	[+] 23280	18.3		Luc	2355401	[–] 23554	15.2	
S6 quattro	09/99→01/05	250 / 340		PRO 92154703	ø 321 x 30 x 52.4			Luc	2355482	[–] 23554	15.2	
								Luc	82063300			
									PRO 92176803	ø 269 x 22 x 54		
A6 (4F2, C6) 05/04→03/11												
		34100	Ate	2301802	[+] 23018	20.4		Luc	2391401	[o] 23914	17.2	
2.0 TDI	07/04→10/08	103 / 140										
2.0 TDI	07/04→03/11	100 / 136	Ate	2301881	[+] 23018	20.4		Luc	2391481	[o] 23914	17.2	
2.0 TDI	09/05→06/06	89 / 121										
2.4	05/04→10/08	130 / 177	Ate	82029300				Luc	82509000			
2.4 quattro	01/05→10/08	130 / 177										
			Ate	82062900				Luc	82063300			
				92132200	ø 314 x 25 x 59.4				PRO 92132503	ø 302 x 12 x 49.2		
				PRO 92132203	ø 314 x 25 x 59.4				TPM0008			
				PRO 92132205	ø 314 x 25 x 59.4							
				TPM0008								
		34200	Ate	2395001	[+] 23950	20.3		Luc	2391401	[o] 23914	17.2	
2.0 TDI	11/08→03/11	125 / 170										
2.0 TDI	04/09→03/11	120 / 163	Ate	2395081	[+] 23950	20.3		Luc	2391481	[o] 23914	17.2	
2.0 TFSI	06/05→03/11	125 / 170										
2.7 TDI	11/04→10/08	132 / 180	Ate	82029300				Luc	82509000			
2.7 TDI	11/04→03/11	120 / 163										
2.7 TDI quattro	06/05→03/11	120 / 163	Ate	82062900				Luc	82063300			
2.8 FSI	11/06→10/08	154 / 210										
2.8 FSI	10/08→03/11	140 / 190		92132300	ø 321 x 30 x 59.4				PRO 92132503	ø 302 x 12 x 49.2		
2.8 FSI	10/08→03/11	162 / 220										
2.8 FSI quattro	06/07→10/08	154 / 210		PRO 92132305	ø 321 x 30 x 59.4				TPM0008			
2.8 FSI quattro	10/08→03/11	140 / 190										
2.8 FSI quattro	10/08→03/11	162 / 220		TPM0008								
3.0	08/04→05/06	160 / 218										
3.0 quattro	05/04→05/06	160 / 218										
3.2 FSI quattro	05/04→10/08	188 / 255										
		34300	Ate	2395001	[+] 23950	20.3	PR 1LG,1LV Ø 321 mm PR 1ZL Ø 347 mm	Luc	2332601	[–] 23326	17.7	PR 1KW Ø 330 mm
2.7 TDI	10/08→03/11	140 / 190										
2.7 TDI quattro	10/08→03/11	140 / 190	Ate	2395081	[+] 23950	20.3	PR 1LG,1LV Ø 321 mm PR 1ZL Ø 347 mm	Luc	2332681	[–] 23326	17.7	PR 1KW Ø 330 mm
			Ate	82029300				Luc	2391401	[o] 23914	17.2	PR 1KD,1KΩ Ø 302 mm
			Ate	82062900				Luc	2391481	[o] 23914	17.2	PR 1KD,1KΩ Ø 302 mm
				92132300	ø 321 x 30 x 59.4		PR 1LG,1LV	Luc	82054900			PR 1KW Ø 330 mm
				92132400	ø 347 x 30 x 59.5		PR 1ZL	Luc	82509000			PR 1KD,1KΩ Ø 302 mm
				PRO 92132305	ø 321 x 30 x 59.4		PR 1LG,1LV	Luc	82063300			PR 1KD,1KΩ Ø 302 mm
				PRO 92132405	ø 347 x 30 x 59.5		PR 1ZL	Luc	82063500			PR 1KW Ø 330 mm
				TPM0008					PRO 92132503	ø 302 x 12 x 49.2		PR 1KD,1KΩ
									PRO 92132603	ø 330 x 22 x 49.1		PR 1KW
									TPM0008			
		34400	Ate	2376302	[+] 23763	20.3	PR 1ZL,1LH Ø 347 mm	Luc	2332601	[–] 23326	17.7	PR 1KW,2EE Ø 330 mm
2.7 TDI quattro	11/04→10/08	132 / 180										
			Ate	2376381	[+] 23763	20.3	PR 1ZL,1LH Ø 347 mm	Luc	2332681	[–] 23326	17.7	PR 1KW,2EE Ø 330 mm
			Ate	2395001	[+] 23950	20.3		Luc	2391401	[o] 23914	17.2	
			Ate	2395081	[+] 23950	20.3		Luc	2391481	[o] 23914	17.2	
			Ate	82029300				Luc	82054900			PR 1KW,2EE Ø 330 mm
			Ate	82062900				Luc	82509000			
				92132300	ø 321 x 30 x 59.4			Luc	82063300			
				92132400	ø 347 x 30 x 59.5		PR 1ZL,1LH	Luc	82063500			PR 1KW,2EE Ø 330 mm
				PRO 92132305	ø 321 x 30 x 59.4				PRO 92132503	ø 302 x 12 x 49.2		

→

		kW / hp												
A6 (4F2, C6) 05/04→03/11														
		34400												
2.7 TDI quattro	11/04→10/08	132 / 180		PRO	92132405	ø 347 x 30 x 59.5	PR 1ZL,1LH		PRO	92132603	ø 330 x 22 x 49.1	PR 1KW,2EE
					TPM0008					TPM0008		
		34500	Ate		2395001	[+] 23950 20.3		Luc		2391401	[o] 23914 17.2	
3.0	09/04→12/05	162 / 220	Ate	epad	2395081	[+] 23950 20.3		Luc	epad	2391481	[o] 23914 17.2	
			Ate		82071800				PRO	92132503	ø 302 x 12 x 49.2	
					92132300	ø 321 x 30 x 59.4						
				PRO	92132305	ø 321 x 30 x 59.4						
					TPM0008							
		34600	Ate		2395001	[+] 23950 20.3		Luc		2332601	[–] 23326 17.7	PR 1KW,2EE Ø 330 mm
3.0 TDI	06/06→03/11	171 / 232										
3.0 TDI quattro	05/04→05/06	165 / 225										
3.0 TDI quattro	06/06→10/08	171 / 233	Ate	epad	2395081	[+] 23950 20.3		Luc	epad	2332681	[–] 23326 17.7	PR 1KW,2EE Ø 330 mm
3.2 FSI	05/09→03/11	195 / 265										
3.2 FSI quattro	09/06→10/08	183 / 249	Ate		82029300			Luc		2391401	[o] 23914 17.2	PR 1KD,2ED Ø 302 mm
			Ate		82062900			Luc	epad	2391481	[o] 23914 17.2	PR 1KD,2ED Ø 302 mm
					92132300	ø 321 x 30 x 59.4	PR 1LG,1LD	Luc		82054900		PR 1KW,2EE Ø 330 mm
					92132400	ø 347 x 30 x 59.5	PR 1ZL,1LH	Luc		82509000		PR 1KD,2ED Ø 302 mm
				PRO	92132305	ø 321 x 30 x 59.4	PR 1LG,1LD	Luc		82063300		PR 1KD,2ED Ø 302 mm
				PRO	92132405	ø 347 x 30 x 59.5	PR 1ZL,1LH	Luc		82063500		PR 1KW,2EE Ø 330 mm
					TPM0008				PRO	92132503	ø 302 x 12 x 49.2	PR 1KD,2ED
									PRO	92132603	ø 330 x 22 x 49.1	PR 1KW,2EE
										TPM0008		
		34700	Ate		2301802	[+] 23018 20.4	PR 1LT Ø 314 mm	Luc		2332601	[–] 23326 17.7	PR 1KW,2EE Ø 330 mm
3.0 TDI quattro	05/04→03/11	155 / 211	Ate	epad	2301881	[+] 23018 20.4	PR 1LT Ø 314 mm	Luc	epad	2332681	[–] 23326 17.7	PR 1KW,2EE Ø 330 mm
			Ate		2395001	[+] 23950 20.3	PR 1LG,1LD Ø 321 mm PR 1ZL,1LH Ø 347 mm	Luc		2391401	[o] 23914 17.2	PR 1KD,2ED Ø 302 mm
			Ate	epad	2395081	[+] 23950 20.3	PR 1LG,1LD Ø 321 mm PR 1ZL,1LH Ø 347 mm	Luc	epad	2391481	[o] 23914 17.2	PR 1KD,2ED Ø 302 mm
			Ate		82029300			Luc		82054900		PR 1KW,2EE Ø 330 mm
			Ate		82062900			Luc		82509000		PR 1KD,2ED Ø 302 mm
					92132200	ø 314 x 25 x 59.4	PR 1LT	Luc		82063300		PR 1KD,2ED Ø 302 mm
					92132300	ø 321 x 30 x 59.4	PR 1LG,1LD	Luc		82063500		PR 1KW,2EE Ø 330 mm
					92132400	ø 347 x 30 x 59.5	PR 1ZL,1LH		PRO	92132503	ø 302 x 12 x 49.2	PR 1KD,2ED
				PRO	92132203	ø 314 x 25 x 59.4	PR 1LT		PRO	92132603	ø 330 x 22 x 49.1	PR 1KW,2EE
				PRO	92132205	ø 314 x 25 x 59.4	PR 1LT			TPM0008		
				PRO	92132305	ø 321 x 30 x 59.4	PR 1LG,1LD					
				PRO	92132405	ø 347 x 30 x 59.5	PR 1ZL,1LH					
					TPM0008							
		34800	Ate		2395001	[+] 23950 20.3		Luc		2332601	[–] 23326 17.7	
3.0 TDI quattro	10/08→03/11	176 / 240										
3.0 TFSI quattro	10/08→03/11	213 / 290										
3.0 TFSI quattro	10/08→03/11	220 / 299	Ate	epad	2395081	[+] 23950 20.3		Luc	epad	2332681	[–] 23326 17.7	
			Ate		82029300			Luc		82054900		
			Ate		82062900			Luc		82063500		
					92132400	ø 347 x 30 x 59.5			PRO	92132603	ø 330 x 22 x 49.1	
				PRO	92132405	ø 347 x 30 x 59.5				TPM0008		
					TPM0008							

AUDI

AUDI

		kW / hp											
A6 (4F2, C6) 05/04→03/11													
		34900	Ate		**2376302**	[+] 23763 20.3	PR 1ZL, 1LH	Luc		**2332601**	[–] 23326 17.7	PR 1KW, 2EE
3.2 FSI	05/04→05/09	188 / 255	Ate	epad	**2376381**	[+] 23763 20.3	PR 1ZL, 1LH	Luc	epad	**2332681**	[–] 23326 17.7	PR 1KW, 2EE
			Ate		**2395001**	[+] 23950 20.3	PR 1LG,1LD	Luc		**2391401**	[o] 23914 17.2	PR 1KD,2ED Ø 302 mm
			Ate	epad	**2395081**	[+] 23950 20.3	PR 1LG,1LD	Luc	epad	**2391481**	[o] 23914 17.2	PR 1KD,2ED Ø 302 mm
			Ate		**82029300**			Luc		**82509000**		PR 1KD,2ED Ø 302 mm
			Ate		**82062900**			Luc		**82063300**		
					92132300	ø 321 x 30 x 59.4	PR 1LG, 1LD		PRO	**92132503**	ø 302 x 12 x 49.2	PR 1ZL, 1LH
					92132400	ø 347 x 30 x 59.5	PR 1ZL, 1LH		PRO	**92132603**	ø 330 x 22 x 49.1	PR 1KW, 2EE
				PRO	**92132305**	ø 321 x 30 x 59.4	PR 1LG, 1LD			**TPM0008**		
				PRO	**92132405**	ø 347 x 30 x 59.5	PR 1ZL, 1LH					
					TPM0008							
		35000	Ate		**2376302**	[+] 23763 20.3		Luc		**2332601**	[–] 23326 17.7	
4.2 FSI quattro	06/06→03/11	257 / 350										
4.2 quattro	05/04→05/06	246 / 335	Ate	epad	**2376381**	[+] 23763 20.3		Luc	epad	**2332681**	[–] 23326 17.7	
			Ate		**82062900**			Luc		**82054900**		
					92132400	ø 347 x 30 x 59.5		Luc		**82063500**		
				PRO	**92132405**	ø 347 x 30 x 59.5			PRO	**92132603**	ø 330 x 22 x 49.1	
					TPM0008					**TPM0008**		
		35100	Bre		**2445501**	[o] 24455 16.9	⊖ ceramic brake	Luc		**2332607**	[–] 23326 17.7	⊖ ceramic brake
RS6 quattro	09/08→08/10	426 / 580										
		35200	Ate		**2388501**	[+] 23885 20.5		Luc		**2332601**	[–] 23326 17.7	
S6 quattro	03/06→03/11	320 / 435	Ate		**82062900**			Luc	epad	**2332681**	[–] 23326 17.7	
				PRO	**92151303**	ø 385 x 36 x 33.5		Luc		**82054900**		
					TPM0008			Luc		**82063300**		
									PRO	**92132603**	ø 330 x 22 x 49.1	
										TPM0008		
A6 (4G2, C7) 11/10→05/13													
		35300	Ate		**2515802**	[–] 25158 20	Ø 356 mm PR 1LL	Luc		**2521402**	[+] 25214 17.5	Ø 300 mm PR 1KW
2.0 TDI	03/11→	120 / 163										
2.0 TDI	03/11→	130 / 177	Luc		**2474301**	[+] 24743 19.4	Ø 320 mm Ø 345 mm PR 1LA,1LJ	Luc		**2521403**	[+] 25214 17.5	Ø 330 mm PR 2EA
2.0 TFSI	05/11→	132 / 180										
2.0 TFSI hybrid	11/11→	155 / 211										
2.8 FSI	03/11→	150 / 204	Luc	epad	**2474381**	[+] 24743 19.4	Ø 320 mm Ø 345 mm PR 1LA,1LJ	Luc		**82054900**		PR 2EA
2.8 FSI quattro	03/11→	150 / 204										
3.0 TDI	11/10→	150 / 204			**98049400**	L312	PR 1LL	Luc		**82514200**		PR 1KW
			Luc		**82518300**		PR 1LA;LB Ø 320 mm →2011-06-20		PRO	**92160103**	ø 300 x 12 x 36.2	PR 1KW
							PR 1LJ Ø 345 mm →2011-06-20		PRO	**92238303**	ø 330 x 22 x 36.2	PR 2EA
				PRO	**92229203**	ø 345 x 30 x 52	PR 1LJ			**TPM0008**		
				PRO	**92229303**	ø 320 x 30 x 52.4	PR 1LA					
				PRO	**92238203**	ø 356 x 34 x 52.1	PR 1LL					
					TPM0008							
		35400	Luc		**2474301**	[+] 24743 19.4		Luc		**2521402**	[+] 25214 17.5	
2.0 TDI	01/12→	100 / 136	Luc	epad	**2474381**	[+] 24743 19.4		Luc		**82514200**		
			Luc		**82518300**				PRO	**92160103**	ø 300 x 12 x 36.2	
				PRO	**92229303**	ø 320 x 30 x 52.4				**TPM0008**		
					TPM0008							
		35500	Bre		**2484701**	[–] 24847 17	PR 1LU	Luc		**2521402**	[+] 25214 17.5	PR 1KW
2.0 TDI	11/13→	140 / 190										
2.0 TFSI	05/13→	162 / 220										

→

		30 kW / hp												
A6 (4G2, C7) 11/10→05/13														
2.0 TFSI quattro	05/12→05/13	155 / 211	Ate		**2515802**	[–] 25158 20	PR 1LL		Luc		**2521403**	[+] 25214 17.5	PR 2EA,1KY
2.0 TFSI quattro	05/13→	162 / 220												
3.0 TDI quattro	05/13→	176 / 239	Luc		**2474301**	[+] 24743 19.4	PR 1LA,1LJ		Luc		**82054900**		PR 2EA
			Luc	epad	**2474381**	[+] 24743 19.4	PR 1LA,1LJ		Luc		**82514200**		PR 1KW
					98049400	L312	PR 1LL			PRO	**92160103**	ø 300 x 12 x 36.2	PR 1KW
			Luc		**82518300**		PR 1LA,1LJ			PRO	**92238303**	ø 330 x 22 x 36.2	PR 2EA
				PRO	**92229203**	ø 345 x 30 x 52	PR 1LJ				**TPM0008**		
				PRO	**92229303**	ø 320 x 30 x 52.4	PR 1LA						
				PRO	**92238203**	ø 356 x 34 x 52.1	PR 1LL						
					TPM0008								
		35600	Ate		**2515802**	[–] 25158 20	Ø 356 mm PR 1LL		Luc		**2521402**	[+] 25214 17.5	Ø 300 mm PR 1KW
2.0 TFSI	03/11→05/13	155 / 211	Luc		**2474301**	[+] 24743 19.4	Ø 320 mm Ø 345 mm PR 1LA,1LJ		Luc		**2521403**	[+] 25214 17.5	Ø 330 mm PR 2EA
			Luc	epad	**2474381**	[+] 24743 19.4	Ø 320 mm Ø 345 mm PR 1LA,1LJ		Luc		**82054900**		PR 2EA
					98049400	L312			Luc		**82514200**		PR 1KW
			Luc		**82518300**		PR 1LA;LB Ø 320 mm →2011-06-20			PRO	**92160103**	ø 300 x 12 x 36.2	PR 1KW
							PR 1LJ Ø 345 mm →2011-06-20			PRO	**92238303**	ø 330 x 22 x 36.2	PR 2EA
				PRO	**92229203**	ø 345 x 30 x 52	PR 1LJ				**TPM0008**		
				PRO	**92229303**	ø 320 x 30 x 52.4	PR 1LA						
				PRO	**92238203**	ø 356 x 34 x 52.1	PR 1LL						
					TPM0008								
		35700	Luc		**2474301**	[+] 24743 19.4			Luc		**2521403**	[+] 25214 17.5	
3.0 TDI quattro	03/11→	150 / 204	Luc	epad	**2474381**	[+] 24743 19.4			Luc		**82054900**		
3.0 TDI quattro	03/11→	180 / 245	Luc		**82518300**		→2011-06-20			PRO	**92238303**	ø 330 x 22 x 36.2	
				PRO	**92229203**	ø 345 x 30 x 52					**TPM0008**		
					TPM0008								
		35800	Ate		**2515802**	[–] 25158 20			Luc		**2521403**	[+] 25214 17.5	
3.0 TDI quattro	11/11→	230 / 313											
3.0 TFSI quattro	11/10→05/12	220 / 300			**98049400**	L312			Luc		**82054900**		
3.0 TFSI quattro	03/11→	228 / 310		PRO	**92238203**	ø 356 x 34 x 52.1				PRO	**92238303**	ø 330 x 22 x 36.2	
					TPM0008						**TPM0008**		
		35900	Bre		**2484701**	[–] 24847 17			Luc		**2521403**	[+] 25214 17.5	
S6 quattro	02/12→	309 / 420			**98049201**	L264			Luc		**82054900**		
					TPM0008					PRO	**92238303**	ø 330 x 22 x 36.2	
											TPM0008		
A6 Allroad (4FH, C6) 05/06→08/11														
		36000	Ate		**2376302**	[+] 23763 20.3	PR 1ZL Ø 347 mm		Luc		**2332601**	[–] 23326 17.7	PR 1KW Ø 330 mm
2.7 TDI quattro	05/06→10/08	132 / 180											
2.7 TDI quattro	10/08→08/11	140 / 190	Ate	epad	**2376381**	[+] 23763 20.3	PR 1ZL Ø 347 mm		Luc	epad	**2332681**	[–] 23326 17.7	PR 1KW Ø 330 mm
3.0 TDI quattro	05/06→10/08	171 / 233											
3.0 TDI quattro	05/06→08/11	155 / 211	Ate		**2395001**	[+] 23950 20.3	PR 1LG Ø 321 mm		Luc		**2391401**	[o] 23914 17.2	PR 1KD Ø 302 mm
3.0 TDI quattro	10/08→08/11	176 / 240											
			Ate	epad	**2395081**	[+] 23950 20.3	PR 1LG Ø 321 mm		Luc	epad	**2391481**	[o] 23914 17.2	PR 1KD Ø 302 mm
			Ate		**82029300**				Luc		**82054900**		PR 1KW Ø 330 mm
			Ate		**82062900**				Luc		**82509000**		PR 1KD Ø 302 mm
					92132300	ø 321 x 30 x 59.4	PR 1LG		Luc		**82063300**		PR 1KD Ø 302 mm
					92132400	ø 347 x 30 x 59.5	PR 1ZL		Luc		**82063500**		PR 1KW Ø 330 mm

AUDI

AUDI

		kW / hp										
A6 Allroad (4FH, C6) 05/06→08/11												
		36000										
2.7 TDI quattro	05/06→10/08	132 / 180		PRO	**92132305**	ø 321 x 30 x 59.4	PR 1LG		PRO	**92159503**	ø 302 x 12 x 42.4	PR 1KD
2.7 TDI quattro	10/08→08/11	140 / 190		PRO	**92132405**	ø 347 x 30 x 59.5	PR 1ZL		PRO	**92160403**	ø 330 x 22 x 42.5	PR 1KW
3.0 TDI quattro	05/06→10/08	171 / 233			**TPM0008**							
3.0 TDI quattro	05/06→08/11	155 / 211										
3.0 TDI quattro	10/08→08/11	176 / 240										
		36100	Ate		**2395001**	[+] 23950 20.3		Luc		**2391401**	[o] 23914 17.2	
2.7 TDI quattro	05/06→08/11	120 / 163	Ate	epad	**2395081**	[+] 23950 20.3		Luc	epad	**2391481**	[o] 23914 17.2	
			Ate		**82029300**			Luc		**82509000**		
			Ate		**82062900**			Luc		**82063300**		
					92132300	ø 321 x 30 x 59.4			PRO	**92159503**	ø 302 x 12 x 42.4	
				PRO	**92132305**	ø 321 x 30 x 59.4						
					TPM0008							
		36200	Ate		**2376302**	[+] 23763 20.3		Luc		**2332601**	[–] 23326 17.7	
3.0 TFSI quattro	10/08→08/11	213 / 290										
3.2 FSI quattro	05/06→10/08	188 / 255	Ate	epad	**2376381**	[+] 23763 20.3		Luc	epad	**2332681**	[–] 23326 17.7	
4.2 FSI quattro	05/06→12/10	257 / 350	Ate		**82029300**			Luc		**82054900**		
			Ate		**82062900**			Luc		**82063500**		
					92132400	ø 347 x 30 x 59.5			PRO	**92160403**	ø 330 x 22 x 42.5	
				PRO	**92132405**	ø 347 x 30 x 59.5						
					TPM0008							
A6 Allroad (4GH) 01/12→												
		36300	Ate		**2515802**	[–] 25158 20	PR 1LL	Luc		**2521403**	[+] 25214 17.5	
2.0 TFSI quattro	09/12→	157 / 214	Luc		**2474301**	[+] 24743 19.4	PR 1LJ	Luc		**82054900**		
			Luc	epad	**2474381**	[+] 24743 19.4	PR 1LJ		PRO	**92238303**	ø 330 x 22 x 36.2	
					98049400	L312	PR 1LL			**TPM0008**		
			Luc		**82518300**		PR 1LJ					
					TPM0008							
		36400	Ate		**2515802**	[–] 25158 20	PR 1LL,1ZK	Luc		**2521403**	[+] 25214 17.5	
2.0 TFSI quattro	09/13→	164 / 223	Luc		**2474301**	[+] 24743 19.4	PR 1LJ			**98046500**	L215	PR 2EA
			Luc	epad	**2474381**	[+] 24743 19.4	PR 1LJ	Luc		**82054900**		PR 2EA
			Luc		**82518300**		PR 1LJ		PRO	**92238303**	ø 330 x 22 x 36.2	
				PRO	**92238203**	ø 356 x 34 x 52.1	PR 1ZK			**TPM0008**		PR 2EJ
					TPM0008							
		36500	Luc		**2474301**	[+] 24743 19.4		Luc		**2521403**	[+] 25214 17.5	
3.0 TDI quattro	01/12→	150 / 204										
3.0 TDI quattro	01/12→	180 / 245	Luc	epad	**2474381**	[+] 24743 19.4		Luc		**82054900**		
			Luc		**82518300**				PRO	**92238303**	ø 330 x 22 x 36.2	
				PRO	**92229203**	ø 345 x 30 x 52				**TPM0008**		
					TPM0008							
		36600	Ate		**2515802**	[–] 25158 20		Luc		**2521403**	[+] 25214 17.5	
3.0 TDI quattro	01/12→	230 / 313			**98049400**	L312		Luc		**82054900**		
3.0 TFSI quattro	01/12→	228 / 310			**TPM0008**				PRO	**92238303**	ø 330 x 22 x 36.2	
										TPM0008		

A6 Allroad Avant (4FH, C6) 05/06→08/11 → A6 Allroad (4FH, C6), Page 57

A6 Allroad Estate (4FH, C6) 05/06→08/11 → A6 Allroad (4FH, C6), Page 57

A6 Avant (4B5, C5) 12/97→01/05

		kW / hp													
		36700	Ate		2193801	[+] 21938	20.4	→4B·X·070000 ⊕ J	Luc		2355401	[–] 23554	15.2	4B·2·000001→ 2001·06·01→
1.8	12/97→01/05	92 / 125													
1.8	02/98→01/05	85 / 116	Ate		2193881	[+] 21938	20.4	→4B·X·070000 ⊕ J	Luc		2355402	[–] 23554	17.2	→4B·1·200000 →2001·04·30
			Ate		2301802	[+] 23018	20.4	4B·X·070001→	Luc		2355481	[–] 23554	17.2	→4B·1·200000 →2001·04·30
			Ate		2301881	[+] 23018	20.4	4B·X·070001→	Luc		2355482	[–] 23554	15.2	4B·2·000001→ 2001·06·01→
			Ate		82029300				Luc		82037300			
			Ate		82062900				Luc		82063300			
				PRO	92057503	ø 245 x 10 x 63.9								
		36800	Ate		2193801	[+] 21938	20.4	→4B·X·070000 ⊕ J PR 1LB,1LE	Luc		2355401	[–] 23554	15.2	4B·2·000001→ 2001·06·01→
1.8 T	12/97→01/05	110 / 150													
			Ate		2193881	[+] 21938	20.4	→4B·X·070000 ⊕ J PR 1LB,1LE	Luc		2355402	[–] 23554	17.2	→4B·1·200000 →2001·04·30
			Ate		2301802	[+] 23018	20.4	4B·X·070001→ PR 1LF,1LT	Luc		2355481	[–] 23554	17.2	→4B·1·200000 →2001·04·30
			Ate		2301881	[+] 23018	20.4	4B·X·070001→ PR 1LF,1LT	Luc		2355482	[–] 23554	15.2	4B·2·000001→ 2001·06·01→
			Ate		82029300				Luc		82037300			
			Ate		82062900				Luc		82063300			
				PRO	92106103	ø 312 x 25 x 46.4		PR 1LF,1LT		PRO	92057503	ø 245 x 10 x 63.9		
				PRO	92106105	ø 312 x 25 x 46.4		PR 1LF,1LT						
		36900	Ate		2193801	[+] 21938	20.4	→4B·X·070000 ⊕ J PR 1LB,1LE	Luc		2355401	[–] 23554	15.2	4B·2·000001→ 2001·06·01→
1.8 T	04/99→01/05	132 / 180													
			Ate		2193881	[+] 21938	20.4	→4B·X·070000 ⊕ J PR 1LB,1LE	Luc		2355402	[–] 23554	17.2	→4B·1·200000 →2001·04·30
			Ate		2301802	[+] 23018	20.4	⊖ J PR 1LF,1LT	Luc		2355481	[–] 23554	17.2	→4B·1·200000 →2001·04·30
			Ate		2301881	[+] 23018	20.4	⊖ J PR 1LF,1LT	Luc		2355482	[–] 23554	15.2	4B·2·000001→ 2001·06·01→
			Ate		82029300				Luc		82037300			
			Ate		82062900				Luc		82063300			
				PRO	92106103	ø 312 x 25 x 46.4		PR 1LF,1LT		PRO	92057503	ø 245 x 10 x 63.9		
				PRO	92106105	ø 312 x 25 x 46.4		PR 1LF,1LT						
		37000	Ate		2193801	[+] 21938	20.4	→4B·X·070000 ⊕ J PR 1LB,1LE	Luc		2355401	[–] 23554	15.2	4B·2·000001→ 2001·06·01→
1.8 T quattro	12/97→01/05	110 / 150													
1.8 T quattro	12/97→01/05	132 / 180	Ate		2193881	[+] 21938	20.4	→4B·X·070000 ⊕ J PR 1LB,1LE	Luc		2355402	[–] 23554	17.2	→4B·1·200000 →2001·04·30
			Ate		2301802	[+] 23018	20.4	4B·X·070001→ PR 1LF,1LT	Luc		2355481	[–] 23554	17.2	→4B·1·200000 →2001·04·30
			Ate		2301881	[+] 23018	20.4	4B·X·070001→ PR 1LF,1LT	Luc		2355482	[–] 23554	15.2	4B·2·000001→ 2001·06·01→
			Ate		82029300				Luc		82037300			
			Ate		82062900				Luc		82063300			
				PRO	92106103	ø 312 x 25 x 46.4		PR 1LF,1LT			92090800	ø 245 x 10 x 53.9		PR 0N1
				PRO	92106105	ø 312 x 25 x 46.4		PR 1LF,1LT		PRO	92090803	ø 245 x 10 x 53.9		PR 0N1
										PRO	92104103	ø 255 x 9.9 x 53.8		PR 0N5
										PRO	92117303	ø 255 x 10 x 48		PR 0N6
		37100	Ate		2193801	[+] 21938	20.4	→4B·X·070000 ⊕ J	Luc		2355402	[–] 23554	17.2	
1.9 TDI	02/98→04/01	81 / 110													
1.9 TDI	07/00→01/05	85 / 115	Ate		2193881	[+] 21938	20.4	→4B·X·070000 ⊕ J	Luc		2355481	[–] 23554	17.2	
			Ate		2301802	[+] 23018	20.4	4B·X·070001→	Luc		82037300			
			Ate		2301881	[+] 23018	20.4	4B·X·070001→	Luc		82063300			
			Ate		82029300					PRO	92057503	ø 245 x 10 x 63.9		
			Ate		82062900									
		37200	Ate		2193801	[+] 21938	20.4	⊕ J	Luc		2355401	[–] 23554	15.2	
1.9 TDI	08/01→01/05	96 / 130													

AUDI

AUDI

A6 Avant (4B5, C5) 12/97→01/05

			kW / hp												
			37200	Ate	epad	2193881	[+] 21938 20.4	⊕ J	Luc	epad	2355482	[–] 23554 15.2	
1.9 TDI	08/01→01/05	96 / 130		Ate	epad	2301802	[+] 23018 20.4	⊖ J	Luc		82037300		
				Ate	epad	2301881	[+] 23018 20.4	⊖ J	Luc		82063300		
				Ate		82029300				PRO	92057503	ø 245 x 10 x 63.9	
				Ate		82062900							
			37300	Ate		2193801	[+] 21938 20.4	⊕ J PR 1LB,1LE	Luc		2355401	[–] 23554 15.2	
2.0	08/01→01/05	96 / 130		Ate	epad	2193881	[+] 21938 20.4	⊕ J PR 1LB,1LE	Luc	epad	2355482	[–] 23554 15.2	
				Ate		2301802	[+] 23018 20.4	⊖ J PR 1LF,1LT	Luc		82037300		
				Ate	epad	2301881	[+] 23018 20.4	⊖ J PR 1LF,1LT	Luc		82063300		
				Ate		82029300				PRO	92057503	ø 245 x 10 x 63.9	
				Ate		82062900							
					PRO	92106103	ø 312 x 25 x 46.4	PR 1LF,1LT					
					PRO	92106105	ø 312 x 25 x 46.4	PR 1LF,1LT					
			37400	Ate		2193801	[+] 21938 20.4	→4B-X-070000 ⊕ J	Luc		2355401	[–] 23554 15.2	4B-2-000001→ 2001-06-01→
2.4	12/97→01/05	115 / 156											
2.4	12/97→01/05	120 / 163		Ate	epad	2193881	[+] 21938 20.4	→4B-X-070000 ⊕ J	Luc	epad	2355402	[–] 23554 17.2	→4B-1-200000 →2001-04-30
2.4	12/97→01/05	121 / 165											
2.4	07/98→01/05	100 / 136											
2.5 TDI	12/97→01/05	110 / 150		Ate	epad	2301802	[+] 23018 20.4	4B-X-070001→	Luc	epad	2355481	[–] 23554 17.2	→4B-1-200000 →2001-04-30
				Ate	epad	2301881	[+] 23018 20.4	4B-X-070001→	Luc	epad	2355482	[–] 23554 15.2	4B-2-000001→ 2001-06-01→
				Ate		82029300			Luc		82037300		
				Ate		82062900			Luc		82063300		
					PRO	92106103	ø 312 x 25 x 46.4			PRO	92057503	ø 245 x 10 x 63.9	
					PRO	92106105	ø 312 x 25 x 46.4						
			37500	Ate		2193801	[+] 21938 20.4	⊕ J	Luc		2355401	[–] 23554 15.2	
2.4	08/01→01/05	125 / 170											
2.5 TDI	07/02→01/05	120 / 163		Ate	epad	2193881	[+] 21938 20.4	⊕ J	Luc	epad	2355482	[–] 23554 15.2	
				Ate		2301802	[+] 23018 20.4	⊖ J	Luc		82037300		
				Ate	epad	2301881	[+] 23018 20.4	⊖ J	Luc		82063300		
				Ate		82029300				PRO	92057503	ø 245 x 10 x 63.9	
				Ate		82062900							
					PRO	92106103	ø 312 x 25 x 46.4						
					PRO	92106105	ø 312 x 25 x 46.4						
			37600	Ate		2193801	[+] 21938 20.4	→4B-X-070000 ⊕ J	Luc		2355401	[–] 23554 15.2	4B-2-000001→ 2001-06-01→
2.4 quattro	12/97→01/05	120 / 163											
2.4 quattro	12/97→01/05	121 / 165		Ate	epad	2193881	[+] 21938 20.4	→4B-X-070000 ⊕ J	Luc		2355402	[–] 23554 17.2	→4B-1-200000 →2001-04-30
2.5 TDI quattro	12/97→01/05	110 / 150											
				Ate		2301802	[+] 23018 20.4	4B-X-070001→	Luc	epad	2355481	[–] 23554 17.2	→4B-1-200000 →2001-04-30
				Ate	epad	2301881	[+] 23018 20.4	4B-X-070001→	Luc	epad	2355482	[–] 23554 15.2	4B-2-000001→ 2001-06-01→
				Ate		82029300			Luc		82037300		
				Ate		82062900			Luc		82063300		
					PRO	92106103	ø 312 x 25 x 46.4				92090800	ø 245 x 10 x 53.9	PR 0N1
					PRO	92106105	ø 312 x 25 x 46.4			PRO	92090803	ø 245 x 10 x 53.9	PR 0N1
										PRO	92104103	ø 255 x 9.9 x 53.8	PR 0N5
										PRO	92117303	ø 255 x 10 x 48	PR 0N6
			37700	Ate		2193801	[+] 21938 20.4	→4B-X-070000 ⊕ J	Luc		2355401	[–] 23554 15.2	
2.4 quattro	08/98→05/01	115 / 156											

→

A6 Avant (4B5, C5) 12/97→01/05

37700															
2.4 quattro	08/98→05/01	115 / 156	Ate		2193881	[+] 21938	20.4	→4B·X·070000 ⊕ J		Luc		2355482	[–] 23554	15.2	
			Ate		2301802	[+] 23018	20.4	4B·X·070001→		Luc		82037300			
			Ate		2301881	[+] 23018	20.4	4B·X·070001→		Luc		82063300			
			Ate		82029300							92090800	ø 245 x 10 x 53.9	PR 0N1	
			Ate		82062900						PRO	92090803	ø 245 x 10 x 53.9	PR 0N1	
				PRO	92106103	ø 312 x 25 x 46.4					PRO	92104103	ø 255 x 9.9 x 53.8	PR 0N5	
				PRO	92106105	ø 312 x 25 x 46.4					PRO	92117303	ø 255 x 10 x 48	PR 0N6	
37800															
2.4 quattro	08/01→01/05	125 / 170	Ate		2193801	[+] 21938	20.4	⊕ J		Luc		2355401	[–] 23554	15.2	
			Ate		2193881	[+] 21938	20.4	⊕ J		Luc		2355482	[–] 23554	15.2	
			Ate		2301802	[+] 23018	20.4	⊖ J		Luc		82037300			
			Ate		2301881	[+] 23018	20.4	⊖ J		Luc		82063300			
			Ate		82029300							92090800	ø 245 x 10 x 53.9	PR 0N1	
			Ate		82062900						PRO	92090803	ø 245 x 10 x 53.9	PR 0N1	
				PRO	92106103	ø 312 x 25 x 46.4					PRO	92104103	ø 255 x 9.9 x 53.8	PR 0N5	
				PRO	92106105	ø 312 x 25 x 46.4					PRO	92117303	ø 255 x 10 x 48	PR 0N6	
37900															
2.5 TDI	02/00→01/05	132 / 180	Ate		2193801	[+] 21938	20.4	⊕ J Ø 312 mm		Luc		2355401	[–] 23554	15.2	4B·2·000001→ 2001·06·01→
			Ate		2193881	[+] 21938	20.4	⊕ J Ø 312 mm		Luc		2355402	[–] 23554	17.2	→4B·1·200000 →2001·04·30
			Ate		2301802	[+] 23018	20.4	⊖ J Ø 312 mm		Luc		2355481	[–] 23554	17.2	→4B·1·200000 →2001·04·30
			Ate		2301881	[+] 23018	20.4	⊖ J Ø 312 mm		Luc		2355482	[–] 23554	15.2	4B·2·000001→ 2001·06·01→
			Ate		2376201	[+] 23762	20.4	Ø 320 mm		Luc		82037300			
			Ate		2376281	[+] 23762	20.4	Ø 320 mm		Luc		82063300			
			Ate		82029300						PRO	92057503	ø 245 x 10 x 63.9		
			Ate		82062900										
				PRO	92106103	ø 312 x 25 x 46.4									
				PRO	92106105	ø 312 x 25 x 46.4									
				PRO	92106703	ø 320 x 30 x 46.5									
				PRO	92106705	ø 320 x 30 x 46.5									
38000															
2.5 TDI	08/01→01/05	114 / 155	Ate		2193801	[+] 21938	20.4	→4B·X·070000 ⊕ J		Luc		2355401	[–] 23554	15.2	
			Ate		2193881	[+] 21938	20.4	→4B·X·070000 ⊕ J		Luc		2355482	[–] 23554	15.2	
			Ate		2301802	[+] 23018	20.4	4B·X·070001→		Luc		82037300			
			Ate		2301881	[+] 23018	20.4	4B·X·070001→		Luc		82063300			
			Ate		82029300						PRO	92057503	ø 245 x 10 x 63.9		
			Ate		82062900										
				PRO	92106103	ø 312 x 25 x 46.4									
				PRO	92106105	ø 312 x 25 x 46.4									
38100															
2.5 TDI quattro	02/00→01/05	132 / 180	Ate		2193801	[+] 21938	20.4	⊕ J		Luc		2355401	[–] 23554	15.2	4B·2·000001→ 2001·06·01→
			Ate		2193881	[+] 21938	20.4	⊕ J		Luc		2355402	[–] 23554	17.2	→4B·1·200000 →2001·04·30
			Ate		2301802	[+] 23018	20.4	⊖ J		Luc		2355481	[–] 23554	17.2	→4B·1·200000 →2001·04·30
			Ate		2301881	[+] 23018	20.4	⊖ J		Luc		2355482	[–] 23554	15.2	4B·2·000001→ 2001·06·01→
			Ate		82029300					Luc		82037300			

AUDI

AUDI

A6 Avant (4B5, C5) 12/97→01/05

			kW / hp											
2.5 TDI quattro	02/00→01/05	38100	132 / 180	Ate		82062900			Luc		82063300			
					PRO	92106103	ø 312 x 25 x 46.4				92090800	ø 245 x 10 x 53.9	PR ON1
					PRO	92106105	ø 312 x 25 x 46.4			PRO	92090803	ø 245 x 10 x 53.9	PR ON1
										PRO	92104103	ø 255 x 9.9 x 53.8	PR ON5
										PRO	92117303	ø 255 x 10 x 48	PR ON6
2.7 T	02/99→01/05	38200	169 / 230	Luc		2328001	[+] 23280 18.3		Luc		2355401	[–] 23554 15.2	4B-2-000001→ 2001-06-01→
					PRO	92106703	ø 320 x 30 x 46.5		Luc		2355402	[–] 23554 17.2	→4B-1-200000 →2001-04-30
					PRO	92106705	ø 320 x 30 x 46.5		Luc	epad	2355481	[–] 23554 17.2	→4B-1-200000 →2001-04-30
									Luc	epad	2355482	[–] 23554 15.2	4B-2-000001→ 2001-06-01→
									Luc		82037300		
									Luc		82063300		
										PRO	92057503	ø 245 x 10 x 63.9	
2.7 T quattro	12/97→01/05	38300	169 / 230	Luc		2145401	[+] 21454 18.5	→4B-X-060000	Luc		2355401	[–] 23554 15.2	4B-2-000001→ 2001-06-01→
				Luc		2328001	[+] 23280 18.3	4B-X-060001→	Luc		2355402	[–] 23554 17.2	→4B-1-200000 →2001-04-30
					PRO	92106703	ø 320 x 30 x 46.5		Luc	epad	2355481	[–] 23554 17.2	→4B-1-200000 →2001-04-30
					PRO	92106705	ø 320 x 30 x 46.5		Luc	epad	2355482	[–] 23554 15.2	4B-2-000001→ 2001-06-01→
									Luc		82037300		
									Luc		82063300		
										PRO	92104103	ø 255 x 9.9 x 53.8	PR ON5
										PRO	92117303	ø 255 x 10 x 48	PR ON6
2.7 T quattro	08/01→01/05	38400	184 / 250	Luc		2328001	[+] 23280 18.3		Luc		2355401	[–] 23554 15.2	
					PRO	92106703	ø 320 x 30 x 46.5		Luc	epad	2355482	[–] 23554 15.2	
					PRO	92106705	ø 320 x 30 x 46.5		Luc		82037300		
									Luc		82063300		
										PRO	92104103	ø 255 x 9.9 x 53.8	PR ON5
										PRO	92117303	ø 255 x 10 x 48	PR ON6
2.8	12/97→05/00	38500	132 / 180	Ate		2193801	[+] 21938 20.4		Luc		2355402	[–] 23554 17.2	
				Ate	epad	2193881	[+] 21938 20.4		Luc	epad	2355481	[–] 23554 17.2	
				Ate		82029300			Luc		82037300		
				Ate		82062900			Luc		82063300		
					PRO	92106103	ø 312 x 25 x 46.4			PRO	92057503	ø 245 x 10 x 63.9	
					PRO	92106105	ø 312 x 25 x 46.4						
2.8	12/97→01/05	38600	142 / 193	Ate		2193801	[+] 21938 20.4	→4B-X-070000 ⊕ J PR 1LF,1LT	Luc		2355401	[–] 23554 15.2	4B-2-000001→ 2001-06-01→
				Ate	epad	2193881	[+] 21938 20.4	→4B-X-070000 ⊕ J PR 1LF,1LT	Luc		2355402	[–] 23554 17.2	→4B-1-200000 →2001-04-30
				Ate		2301802	[+] 23018 20.4	4B-X-070001→	Luc	epad	2355481	[–] 23554 17.2	→4B-1-200000 →2001-04-30
				Ate	epad	2301881	[+] 23018 20.4	4B-X-070001→	Luc	epad	2355482	[–] 23554 15.2	4B-2-000001→ 2001-06-01→
				Ate		82029300			Luc		82037300		
				Ate		82062900			Luc		82063300		
					PRO	92106103	ø 312 x 25 x 46.4			PRO	92057503	ø 245 x 10 x 63.9	
					PRO	92106105	ø 312 x 25 x 46.4						

→

A6 Avant (4B5, C5) 12/97→01/05

			kW / hp												
2.8	07/99→01/05	38700	140 / 190	Ate		2193801	[+] 21938	20.4	⊕J	Luc		2355401	[–] 23554	15.2	4B·2·000001→ 2001·06·01→
				Ate	epad	2193881	[+] 21938	20.4	⊕J	Luc		2355402	[–] 23554	17.2	→4B·1·200000 →2001·04·30
				Ate		2301802	[+] 23018	20.4	⊖J	Luc	epad	2355481	[–] 23554	17.2	→4B·1·200000 →2001·04·30
				Ate	epad	2301881	[+] 23018	20.4	⊖J	Luc	epad	2355482	[–] 23554	15.2	4B·2·000001→ 2001·06·01→
				Ate		82029300				Luc		82037300			
				Ate		82062900				Luc		82063300			
					PRO	92106103	ø 312 x 25 x 46.4				PRO	92057503	ø 245 x 10 x 63.9		
					PRO	92106105	ø 312 x 25 x 46.4								
2.8 quattro	12/97→01/05	38800	142 / 193	Ate		2193801	[+] 21938	20.4	→4B·X·070000 ⊕J PR 1LF,1LT	Luc		2355401	[–] 23554	15.2	4B·2·000001→ 2001·06·01→
				Ate	epad	2193881	[+] 21938	20.4	→4B·X·070000 ⊕J PR 1LF,1LT	Luc		2355402	[–] 23554	17.2	→4B·1·200000 →2001·04·30
				Ate		2301802	[+] 23018	20.4	4B·X·070001→	Luc	epad	2355481	[–] 23554	17.2	→4B·1·200000 →2001·04·30
				Ate	epad	2301881	[+] 23018	20.4	4B·X·070001→	Luc	epad	2355482	[–] 23554	15.2	4B·2·000001→ 2001·06·01→
				Ate		82029300				Luc		82037300			
				Ate		82062900				Luc		82063300			
					PRO	92106103	ø 312 x 25 x 46.4		PR 1LF,1LT			92090800	ø 245 x 10 x 53.9		PR 0N1
					PRO	92106105	ø 312 x 25 x 46.4		PR 1LF,1LT		PRO	92090803	ø 245 x 10 x 53.9		PR 0N1
											PRO	92104103	ø 255 x 9.9 x 53.8		PR 0N5
											PRO	92117303	ø 255 x 10 x 48		PR 0N6
3.0 3.0	06/01→01/05 08/01→01/05	38900	160 / 218 162 / 220	Ate		2376201	[+] 23762	20.4		Luc		2355401	[–] 23554	15.2	
				Ate	epad	2376281	[+] 23762	20.4		Luc	epad	2355482	[–] 23554	15.2	
				Ate		82029300				Luc		82037300			
				Ate		82062900				Luc		82063300			
					PRO	92106703	ø 320 x 30 x 46.5				PRO	92057503	ø 245 x 10 x 63.9		
					PRO	92106705	ø 320 x 30 x 46.5								
3.0 quattro 3.0 quattro	06/01→01/05 08/01→01/05	39000	160 / 218 162 / 220	Ate		2376201	[+] 23762	20.4		Luc		2355401	[–] 23554	15.2	
				Ate	epad	2376281	[+] 23762	20.4		Luc	epad	2355482	[–] 23554	15.2	
				Ate		82029300				Luc		82037300			
				Ate		82062900				Luc		82063300			
					PRO	92106703	ø 320 x 30 x 46.5					92090800	ø 245 x 10 x 53.9		PR 0N1
					PRO	92106705	ø 320 x 30 x 46.5				PRO	92090803	ø 245 x 10 x 53.9		PR 0N1
											PRO	92104103	ø 255 x 9.9 x 53.8		PR 0N5
											PRO	92117303	ø 255 x 10 x 48		PR 0N6
3.7	03/99→01/05	39100	191 / 260	Ate		2376201	[+] 23762	20.4		Luc		2355401	[–] 23554	15.2	4B·2·000001→ 2001·06·01→
				Ate	epad	2376281	[+] 23762	20.4		Luc		2355402	[–] 23554	17.2	→4B·1·200000 →2001·04·30
				Ate		82029300				Luc	epad	2355481	[–] 23554	17.2	→4B·1·200000 →2001·04·30
				Ate		82062900				Luc	epad	2355482	[–] 23554	15.2	4B·2·000001→ 2001·06·01→
					PRO	92106703	ø 320 x 30 x 46.5			Luc		82037300			
					PRO	92106705	ø 320 x 30 x 46.5			Luc		82063300			
											PRO	92176803	ø 269 x 22 x 54		
3.7 quattro	03/99→01/05	39200	191 / 260	Ate		2376201	[+] 23762	20.4		Luc		2355401	[–] 23554	15.2	4B·2·000001→ 2001·06·01→

AUDI

AUDI

30 kW / hp

A6 Avant (4B5, C5) 12/97→01/05

39200														
3.7 quattro	03/99→01/05	191 / 260	Ate	epad	2376281	[+] 23762 20.4		Luc	epad	2355402	[–] 23554 17.2	→4B-1-200000 →2001-04-30
			Ate	epad	82029300			Luc	epad	2355481	[–] 23554 17.2	→4B-1-200000 →2001-04-30
			Ate	epad	82062900			Luc	epad	2355482	[–] 23554 15.2	4B-2-000001→ 2001-06-01→
				PRO	92106703	ø 320 x 30 x 46.5		Luc		82037300		
				PRO	92106705	ø 320 x 30 x 46.5		Luc		82060100		
								Luc		82063300		
									PRO	92176803	ø 269 x 22 x 54	
39300														
4.2 quattro	11/98→01/05	220 / 299	Luc		2145401	[+] 21454 18.5	→4B-X-060000	Luc		2355401	[–] 23554 15.2	4B-2-000001→ 2001-06-01→
			Luc		2328001	[+] 23280 18.3	4B-X-060001→	Luc		2355402	[–] 23554 17.2	→4B-1-200000 →2001-04-30
				PRO	92106703	ø 320 x 30 x 46.5	PR 1LA,1LG	Luc	epad	2355481	[–] 23554 17.2	→4B-1-200000 →2001-04-30
				PRO	92106705	ø 320 x 30 x 46.5	PR 1LA,1LG	Luc	epad	2355482	[–] 23554 15.2	4B-2-000001→ 2001-06-01→
				PRO	92154703	ø 321 x 30 x 52.4	PR 1LA,1LG,T7Z	Luc		82037300		
								Luc		82063300		
									PRO	92176803	ø 269 x 22 x 54	
39400														
RS6 plus quattro	04/04→01/05	353 / 480	Bre		2375101	[+] 23751 16.7		Luc		2332601	[–] 23326 17.7	
RS6 quattro	07/02→01/05	331 / 450						Luc	epad	2332681	[–] 23326 17.7	
								Luc		82054900		
								Luc		82063500		
39500														
S6 quattro	09/99→01/05	250 / 340	Luc		2328001	[+] 23280 18.3		Luc		2355401	[–] 23554 15.2	
				PRO	92154703	ø 321 x 30 x 52.4	PR T7S	Luc	epad	2355482	[–] 23554 15.2	
								Luc		82063300		
									PRO	92176803	ø 269 x 22 x 54	

A6 Avant (4F5, C6) 03/05→08/11

39600														
2.0 TDI	06/05→10/08	103 / 140	Ate		2301802	[+] 23018 20.4		Luc		2391401	[o] 23914 17.2			
2.0 TDI	06/05→08/11	100 / 136												
2.0 TDI	09/05→06/06	89 / 121	Ate	epad	2301881	[+] 23018 20.4		Luc	epad	2391481	[o] 23914 17.2			
			Ate		82029300			Luc		82509000				
			Ate		82062900			Luc		82063300				
					92132200	ø 314 x 25 x 59.4			PRO	92132503	ø 302 x 12 x 49.2			
				PRO	92132203	ø 314 x 25 x 59.4				TPM0008				
				PRO	92132205	ø 314 x 25 x 59.4								
					TPM0008									
39700														
2.0 TDI	10/08→08/11	125 / 170	Ate		2395001	[+] 23950 20.3		Luc		2391401	[o] 23914 17.2			
2.0 TDI	04/09→08/11	120 / 163												
3.0	03/05→05/06	160 / 218	Ate	epad	2395081	[+] 23950 20.3		Luc	epad	2391481	[o] 23914 17.2			
3.0 quattro	03/05→05/06	160 / 218	Ate		82029300			Luc		82509000				
			Ate		82062900			Luc		82063300				
					92132300	ø 321 x 30 x 59.4			PRO	92132503	ø 302 x 12 x 49.2			
				PRO	92132305	ø 321 x 30 x 59.4				TPM0008				
					TPM0008									
39800														
2.0 TFSI	06/05→08/11	125 / 170	Ate		2301802	[+] 23018 20.4	PR 1LT Ø 314 mm	Luc		2332601	[–] 23326 17.7	PR 1KW,2EE Ø 330 mm		
2.4	03/05→10/08	130 / 177												
2.4 quattro	03/05→10/08	130 / 177	Ate	epad	2301881	[+] 23018 20.4	PR 1LT Ø 314 mm	Luc	epad	2332681	[–] 23326 17.7	PR 1KW,2EE Ø 330 mm		
2.7 TDI	03/05→08/11	120 / 163												
2.7 TDI quattro	03/05→10/08	132 / 180												

→

A6 Avant (4F5, C6) 03/05→08/11

2.7 TDI quattro	06/05→08/11	120 / 163	Ate		2376302	[+] 23763	20.3	PR 1ZL,1LH Ø 347 mm	Luc		2391401	[o] 23914	17.2	PR 1KD,2ED Ø 302 mm
2.7 TDI quattro	10/08→08/11	140 / 190												
3.0 TDi	06/06→08/11	171 / 232	Ate	epad	2376381	[+] 23763	20.3	PR 1ZL,1LH Ø 347 mm	Luc	epad	2391481	[o] 23914	17.2	PR 1KD,2ED Ø 302 mm
3.0 TDI quattro	03/05→05/06	165 / 225												
3.0 TDI quattro	03/05→08/11	155 / 211	Ate		2395001	[+] 23950	20.3	PR 1LG,1LD Ø 321 mm	Luc		82054900			PR 1KW,2EE Ø 330 mm
3.0 TDI quattro	06/06→10/08	171 / 233												
3.0 TDI quattro	10/08→08/11	176 / 240	Ate	epad	2395081	[+] 23950	20.3	PR 1LG,1LD Ø 321 mm	Luc		82509000			PR 1KD,2ED Ø 302 mm
			Ate		82029300				Luc		82063300			PR 1KD,2ED Ø 302 mm
			Ate		82062900				Luc		82063500			PR 1KW,2EE Ø 330 mm
					92132200	ø 314 x 25 x 59.4		PR 1LT		PRO	92132503	ø 302 x 12 x 49.2		PR 1KD,2ED
					92132300	ø 321 x 30 x 59.4		PR 1LG,1LD		PRO	92132603	ø 330 x 22 x 49.1		PR 1KW,2EE
					92132400	ø 347 x 30 x 59.5		PR 1ZL,1LH			TPM0008			
				PRO	92132203	ø 314 x 25 x 59.4		PR 1LT						
				PRO	92132205	ø 314 x 25 x 59.4		PR 1LT						
				PRO	92132305	ø 321 x 30 x 59.4		PR 1LG,1LD						
				PRO	92132405	ø 347 x 30 x 59.5		PR 1ZL,1LH						
					TPM0008									
		39900	Ate		2395001	[+] 23950	20.3		Luc		2332601	[–] 23326	17.7	PR 1KW,2EL Ø 330 mm
2.7 TDI	03/05→10/08	132 / 180												
2.7 TDI	10/08→08/11	140 / 190	Ate	epad	2395081	[+] 23950	20.3		Luc	epad	2332681	[–] 23326	17.7	PR 1KW,2EL Ø 330 mm
			Ate		82029300				Luc		2391401	[o] 23914	17.2	PR 1KD,1KΩ Ø 302 mm
			Ate		82062900				Luc	epad	2391481	[o] 23914	17.2	PR 1KΩ,1KD Ø 302 mm
					92132300	ø 321 x 30 x 59.4		PR 1LG,1LV	Luc		82054900			PR 1KW,2EL Ø 330 mm
					92132400	ø 347 x 30 x 59.5		PR 1ZL,1ZT	Luc		82509000			PR 1KD,1KΩ Ø 302 mm
				PRO	92132305	ø 321 x 30 x 59.4		PR 1LG,1LV	Luc		82063300			PR 1KD,1KΩ Ø 302 mm
				PRO	92132405	ø 347 x 30 x 59.5		PR 1ZL,1ZT	Luc		82063500			PR 1KW,2EL Ø 330 mm
					TPM0008					PRO	92132503	ø 302 x 12 x 49.2		PR 1KD,1KΩ
										PRO	92132603	ø 330 x 22 x 49.1		PR 1KW,2EL
											TPM0008			
		40000	Ate		2395001	[+] 23950	20.3		Luc		2332601	[–] 23326	17.7	PR 1KW,2EE Ø 330 mm
2.8 FSI	11/06→10/08	154 / 210												
2.8 FSI	10/08→08/11	140 / 190	Ate	epad	2395081	[+] 23950	20.3		Luc	epad	2332681	[–] 23326	17.7	PR 1KW,2EE Ø 330 mm
2.8 FSI	10/08→08/11	162 / 220												
2.8 FSI quattro	06/07→10/08	154 / 210	Ate		82029300				Luc		2391401	[o] 23914	17.2	PR 1KD,2ED Ø 302 mm
2.8 FSI quattro	10/08→08/11	140 / 190												
2.8 FSI quattro	10/08→08/11	162 / 220	Ate		82062900				Luc	epad	2391481	[o] 23914	17.2	PR 1KD,2ED Ø 302 mm
3.0 TFSI quattro	10/08→08/11	213 / 290												
3.0 TFSI quattro	10/08→08/11	220 / 299			92132300	ø 321 x 30 x 59.4		PR 1LG,1LD	Luc		82054900			PR 1KW,2EE Ø 330 mm
3.2 FSI	03/05→10/08	188 / 255												
3.2 FSI quattro	03/05→10/08	188 / 255			92132400	ø 347 x 30 x 59.5		PR 1ZL,1LH	Luc		82509000			PR 1KD,2ED Ø 302 mm
				PRO	92132305	ø 321 x 30 x 59.4		PR 1LG,1LD	Luc		82063300			PR 1KD,2ED Ø 302 mm
				PRO	92132405	ø 347 x 30 x 59.5		PR 1ZL,1LH	Luc		82063500			PR 1KW,2EE Ø 330 mm
					TPM0008					PRO	92132503	ø 302 x 12 x 49.2		PR 1KD,2ED
										PRO	92132603	ø 330 x 22 x 49.1		PR 1KW,2EE
											TPM0008			
		40100	Ate		2376302	[+] 23763	20.3		Luc		2332601	[–] 23326	17.7	
4.2 FSI quattro	06/06→08/11	257 / 350												
4.2 quattro	03/05→05/06	246 / 335	Ate	epad	2376381	[+] 23763	20.3		Luc	epad	2332681	[–] 23326	17.7	
			Ate		82062900				Luc		82054900			
					92132400	ø 347 x 30 x 59.5			Luc		82063500			

AUDI

AUDI

		kW / hp											
A6 Avant (4F5, C6) 03/05→08/11													
40100													
4.2 FSI quattro	06/06→08/11	257 / 350		PRO	92132405	ø 347 x 30 x 59.5			PRO	92132603	ø 330 x 22 x 49.1	
4.2 quattro	03/05→05/06	246 / 335			TPM0008					TPM0008		
40200			Bre		2445501	[o] 24455 16.9	⊖ ceramic brake	Luc		2332607	[–] 23326 17.7	⊖ ceramic brake
RS6 quattro	04/08→08/10	426 / 580										
40300			Ate		2388501	[+] 23885 20.5		Luc		2332601	[–] 23326 17.7	
S6 quattro	03/06→08/11	320 / 435	Ate		82062900			Luc	epad	2332681	[–] 23326 17.7	
				PRO	92151303	ø 385 x 36 x 33.5		Luc		82054900		
					TPM0008			Luc		82063300		
									PRO	92132603	ø 330 x 22 x 49.1	
										TPM0008		
A6 Avant (4G5, C7) 05/11→													
40400			Ate		2515802	[–] 25158 20	Ø 356 mm PR 1LL	Luc		2521402	[+] 25214 17.5	Ø 300 mm PR 1KW
2.0 TDI	05/11→	120 / 163										
2.0 TDI	05/11→	130 / 177	Luc		2474301	[+] 24743 19.4	Ø 320 mm Ø 345 mm PR 1LA,1LJ	Luc		2521403	[+] 25214 17.5	Ø 330 mm PR 2EA
2.0 TFSI	06/11→	132 / 180										
2.8 FSI	05/11→	150 / 204										
2.8 FSI quattro	05/11→	150 / 204	Luc	epad	2474381	[+] 24743 19.4	Ø 320 mm Ø 345 mm PR 1LA,1LJ	Luc		82054900		PR 2EA
3.0 TDI	05/11→	150 / 204										
					98049400	L312	PR 1LL	Luc		82514200		PR 1KW
			Luc		82518300		PR 1LA;LB Ø 320 mm →2011-06-20		PRO	92160103	ø 300 x 12 x 36.2	PR 1KW
							PR 1LJ Ø 345 mm →2011-06-20		PRO	92238303	ø 330 x 22 x 36.2	PR 2EA
				PRO	92229203	ø 345 x 30 x 52	PR 1LJ					
				PRO	92229303	ø 320 x 30 x 52.4	PR 1LA			TPM0008		
				PRO	92238203	ø 356 x 34 x 52.1	PR 1LL					
					TPM0008							
40500			Luc		2474301	[+] 24743 19.4		Luc		2521402	[+] 25214 17.5	
2.0 TDI	01/12→	100 / 136	Luc	epad	2474381	[+] 24743 19.4		Luc		82514200		
			Luc		82518300				PRO	92160103	ø 300 x 12 x 36.2	
				PRO	92229303	ø 320 x 30 x 52.4				TPM0008		
					TPM0008							
40600			Bre		2484701	[–] 24847 17	PR 1LU	Luc		2521402	[+] 25214 17.5	PR 1KW
2.0 TDI	11/13→	140 / 190	Ate		2515802	[–] 25158 20	PR 1LL	Luc		2521403	[+] 25214 17.5	PR 2EA,1KY
			Luc		2474301	[+] 24743 19.4	PR 1LA,1LJ	Luc		82054900		PR 2EA
			Luc	epad	2474381	[+] 24743 19.4	PR 1LA,1LJ	Luc		82514200		PR 1KW
					98049400	L312	PR 1LL		PRO	92160103	ø 300 x 12 x 36.2	PR 1KW
			Luc		82518300		PR 1LA,1LJ		PRO	92238303	ø 330 x 22 x 36.2	PR 2EA
				PRO	92229203	ø 345 x 30 x 52	PR 1LJ					
				PRO	92229303	ø 320 x 30 x 52.4	PR 1LA			TPM0008		
				PRO	92238203	ø 356 x 34 x 52.1	PR 1LL					
					TPM0008							
40700			Luc		2474301	[+] 24743 19.4		Luc		2521403	[+] 25214 17.5	
3.0 TDI quattro	05/11→	150 / 204										
3.0 TDI quattro	05/11→	180 / 245	Luc	epad	2474381	[+] 24743 19.4		Luc		82054900		
			Luc		82518300		→2011-06-20		PRO	92238303	ø 330 x 22 x 36.2	
				PRO	92229203	ø 345 x 30 x 52				TPM0008		
					TPM0008							
40800			Ate		2515802	[–] 25158 20		Luc		2521403	[+] 25214 17.5	
3.0 TDI quattro	11/11→	230 / 313										
3.0 TFSI quattro	05/11→05/12	220 / 300										

→

		kW / hp											
A6 Avant (4G5, C7) 05/11→													
3.0 TFSI quattro	11/11→	228 / 310			98049400	L312		Luc		82054900		
				PRO	92238203	ø 356 x 34 x 52.1			PRO	92238303	ø 330 x 22 x 36.2	
					TPM0008					TPM0008		
RS6 quattro	01/13→	40900 412 / 560			TPM0008			Luc		2521403	[+] 25214 17.5	
								Luc		82054900		
										TPM0008		
S6 quattro	02/12→	41000 309 / 420	Bre		2484701	[–] 24847 17		Luc		2521403	[+] 25214 17.5	
					98049201	L264		Luc		82054900		
					TPM0008				PRO	92238303	ø 330 x 22 x 36.2	
										TPM0008		
A6 Saloon (4B2, C5) 01/97→01/05 → A6 (4B2, C5), Page 49													
A6 Saloon (4F2, C6) 05/04→03/11 → A6 (4F2, C6), Page 54													
A6 Stufenheck (4B2, C5) 01/97→01/05 → A6 (4B2, C5), Page 49													
A6 Stufenheck (4F2, C6) 05/04→03/11 → A6 (4F2, C6), Page 54													
A7 Sportback (4GA) 10/10→													
2.8 FSI	02/11→	41100 150 / 204	Luc		2474301	[+] 24743 19.4		Luc		2521402	[+] 25214 17.5	
2.8 FSI quattro	10/10→	150 / 204										
3.0 TDI	11/10→	150 / 204	Luc	epad	2474381	[+] 24743 19.4		Luc		82514200		
3.0 TDI quattro	12/10→	150 / 204	Luc		82518300		→2011-06-20		PRO	92160103	ø 300 x 12 x 36.2	
				PRO	92229303	ø 320 x 30 x 52.4				TPM0008		
					TPM0008							
3.0 TDI	07/14→	41200 160 / 218	Bre		2564301	[o] 25643 16.7		Luc		2521403	[+] 25214 17.5	
3.0 TDI quattro	05/14→	200 / 272			98050300	L342				98046500	L215	
				PRO	92229203	ø 345 x 30 x 52		Luc		82054900		
					TPM0008				PRO	92238303	ø 330 x 22 x 36.2	
										TPM0008		
3.0 TDI quattro	10/10→	41300 180 / 245	Luc		2474301	[+] 24743 19.4		Luc		2521403	[+] 25214 17.5	
			Luc	epad	2474381	[+] 24743 19.4		Luc		82054900		
			Luc		82518300		→2011-06-20		PRO	92238303	ø 330 x 22 x 36.2	
				PRO	92229203	ø 345 x 30 x 52				TPM0008		
					TPM0008							
3.0 TDI quattro	11/11→	41400 230 / 313	Ate		2515802	[–] 25158 20		Luc		2521403	[+] 25214 17.5	
3.0 TFSI quattro	10/10→	220 / 300			98049400	L312		Luc		82054900		
3.0 TFSI quattro	01/11→	228 / 310		PRO	92238203	ø 356 x 34 x 52.1			PRO	92238303	ø 330 x 22 x 36.2	
					TPM0008					TPM0008		
3.0 TDI quattro	05/13→	41500 176 / 239	Bre		2484701	[–] 24847 17	PR 1LU	Luc		2521402	[+] 25214 17.5	PR 1KW
RS7 quattro	10/13→	412 / 560	Ate		2515802	[–] 25158 20	PR 1LL	Luc		2521403	[+] 25214 17.5	PR 2EA,1KY
			Luc		2474301	[+] 24743 19.4	PR 1LA,1LJ	Luc		82054900		PR 2EA
			Luc	epad	2474381	[+] 24743 19.4	PR 1LA,1LJ	Luc		82514200		PR 1KW
					98049400	L312	PR 1LL		PRO	92160103	ø 300 x 12 x 36.2	PR 1KW
			Luc		82518300		PR 1LA,1LJ		PRO	92238303	ø 330 x 22 x 36.2	PR 2EA
				PRO	92229203	ø 345 x 30 x 52	PR 1LJ			TPM0008		

AUDI

AUDI

			kW / hp										
A7 Sportback (4GA) 10/10→													
			41500		PRO	**92229303**	ø 320 x 30 x 52.4	PR 1LA					
3.0 TDI quattro		05/13→	176 / 239		PRO	**92238203**	ø 356 x 34 x 52.1	PR 1LL					
RS7 quattro		10/13→	412 / 560			**TPM0008**							
			41600	Bre		**2484701**	[–] 24847 17		Luc		**2521403**	[+] 25214 17.5	
S7 quattro		02/12→	309 / 420			**98049201**	L264		Luc		**82054900**		
						TPM0008				PRO	**92238303**	ø 330 x 22 x 36.2	
											TPM0008		
A8 (4D2, 4D8) 04/96→09/02													
			41700	Luc		**2145201**	[+] 21452 18.5	→4D-X-004999 Lucas	Luc		**2114401**	[–] 21144 16.6	→4D-X-004999
2.5 TDI		01/97→04/00	110 / 150	Ate		**2163901**	[+] 21639 20.4	Teves ⊕ USA	Luc		**2355402**	[–] 23554 17.2	4D-X-005000→
				Luc		**2311901**	[+] 23119 18.5	4D-X-005001→ PR 1LX Lucas	Luc	epad	**2355481**	[–] 23554 17.2	4D-X-005000→
				Bre		**2377301**	[+] 23773 17.5	PR 1ZL Brembo	Luc		**82037300**		4D-X-005000→
				Bre		**82500700**		PR 1ZL Brembo	Luc		**82062800**		
						92073200	ø 314 x 30 x 59.5	⊖ arm.veh. →4D-X-004999			**92037400**	ø 245 x 10 x 46.2	→4D-X-004999
						92098300	ø 323 x 30 x 59.5	⊖ arm.veh. 4D-X-005001→ →4D-Y-006000 PR 1LX			**92098400**	ø 269 x 22 x 46.4	⊖ arm.veh. 4D-X-005000→
						92112500	ø 345 x 30 x 52	PR 1ZL		PRO	**92057603**	ø 288 x 25 x 46.2	PR 1KW 4D-X-005001→
					PRO	**92098303**	ø 323 x 30 x 59.5	⊖ arm.veh. 4D-X-005001→ →4D-Y-006000 PR 1LX		PRO	**92057605**	ø 288 x 25 x 46.2	PR 1KW 4D-X-005001→
					PRO	**92098305**	ø 323 x 30 x 59.5	⊖ arm.veh. 4D-X-005001→ →4D-Y-006000 PR 1LX		PRO	**92083503**	ø 280 x 22 x 46.2	PR 1KW 4D-X-005001→
										PRO	**92083505**	ø 280 x 22 x 46.2	PR 1KW 4D-X-005001→
			41800	Ate		**2163901**	[+] 21639 20.4	Teves ⊕ USA	Luc		**2355402**	[–] 23554 17.2	
2.5 TDI		09/00→09/02	132 / 180	Luc		**2311901**	[+] 23119 18.5	PR 1LX Lucas	Luc	epad	**2355481**	[–] 23554 17.2	
2.5 TDI quattro		09/00→09/02	132 / 180										
3.3 TDI quattro		06/00→09/02	165 / 224										
3.7 quattro		11/98→09/02	191 / 260	Bre		**2377301**	[+] 23773 17.5	PR 1ZL Brembo	Luc		**82037300**		
4.2 quattro		11/98→09/02	228 / 310										
4.2 quattro		02/99→04/00	175 / 238	Bre		**82500700**		PR 1ZL Brembo	Luc		**82062800**		
S 8 quattro		06/99→09/02	265 / 360										
						92098300	ø 323 x 30 x 59.5	⊖ arm.veh. →4D-Y-006000 PR 1LX			**92098400**	ø 269 x 22 x 46.4	⊖ arm.veh.
						92112500	ø 345 x 30 x 52	PR 1ZL		PRO	**92057603**	ø 288 x 25 x 46.2	PR 1KW 4D-X-005001→
					PRO	**92098303**	ø 323 x 30 x 59.5	⊖ arm.veh. →4D-Y-006000 PR 1LX		PRO	**92057605**	ø 288 x 25 x 46.2	PR 1KW 4D-X-005001→
					PRO	**92098305**	ø 323 x 30 x 59.5	⊖ arm.veh. →4D-Y-006000 PR 1LX		PRO	**92083503**	ø 280 x 22 x 46.2	PR 1KW 4D-X-005001→
										PRO	**92083505**	ø 280 x 22 x 46.2	PR 1KW 4D-X-005001→
			41900	Luc		**2145201**	[+] 21452 18.5	→4D-X-004999 Lucas	Luc		**2114401**	[–] 21144 16.6	→4D-X-004999
2.5 TDI quattro		07/97→04/00	110 / 150	Ate		**2163901**	[+] 21639 20.4	Teves ⊕ USA	Luc		**2355402**	[–] 23554 17.2	4D-X-005000→
2.8		04/96→09/02	142 / 193	Luc		**2311901**	[+] 23119 18.5	4D-X-005001→ PR 1LX Lucas	Luc	epad	**2355481**	[–] 23554 17.2	4D-X-005000→
2.8 quattro		04/96→09/02	142 / 193										
				Bre		**2377301**	[+] 23773 17.5	PR 1ZL Brembo	Luc		**82037300**		4D-X-005000→
				Bre		**82500700**		PR 1ZL Brembo	Luc		**82062800**		
						92073200	ø 314 x 30 x 59.5	⊖ arm.veh. →4D-X-004999			**92037100**	ø 269 x 20 x 46.3	→4D-X-004999
						92098300	ø 323 x 30 x 59.5	⊖ arm.veh. 4D-X-005001→ →4D-Y-006000 PR 1LX			**92098400**	ø 269 x 22 x 46.4	⊖ arm.veh. 4D-X-005000→
						92112500	ø 345 x 30 x 52	PR 1ZL		PRO	**92057603**	ø 288 x 25 x 46.2	PR 1KW 4D-X-005001→
					PRO	**92098303**	ø 323 x 30 x 59.5	⊖ arm.veh. 4D-X-005001→ →4D-Y-006000 PR 1LX		PRO	**92057605**	ø 288 x 25 x 46.2	PR 1KW 4D-X-005001→
					PRO	**92098305**	ø 323 x 30 x 59.5	⊖ arm.veh. 4D-X-005001→ →4D-Y-006000 PR 1LX		PRO	**92083503**	ø 280 x 22 x 46.2	PR 1KW 4D-X-005001→
										PRO	**92083505**	ø 280 x 22 x 46.2	PR 1KW 4D-X-005001→
			42000	Luc		**2145201**	[+] 21452 18.5	→4D-X-004999 Lucas	Luc		**2114401**	[–] 21144 16.6	→4D-X-004999
3.7		11/98→09/02	191 / 260										

→

			30 kW / hp										
A8 (4D2, 4D8) 04/96→09/02													
42000													
3.7	11/98→09/02	191 / 260	Ate	2163901	[+] 21639	20.4	Teves ⊕ USA	Luc	2355402	[–] 23554	17.2	4D-X-005000→	
			Luc	2311901	[+] 23119	18.5	4D-X-005001→ PR 1LX Lucas	Luc	2355481	[–] 23554	17.2	4D-X-005000→	
			Bre	2377301	[+] 23773	17.5	PR 1ZL Brembo	Luc	82037300			4D-X-005000→	
			Bre	82500700			PR 1ZL Brembo	Luc	82062800				
				92073200	ø 314 x 30 x 59.5		⊖ arm.veh. →4D-X-004999		92037400	ø 245 x 10 x 46.2		→4D-X-004999	
				92098300	ø 323 x 30 x 59.5		⊖ arm.veh. 4D-X-005001→ →4D-Y-006000 PR 1LX		92037100	ø 269 x 20 x 46.3		→4D-X-004999	
				92112500	ø 345 x 30 x 52		PR 1ZL		92098400	ø 269 x 22 x 46.4		⊖ arm.veh. 4D-X-005000→	
				PRO 92098303	ø 323 x 30 x 59.5		⊖ arm.veh. 4D-X-005001→ →4D-Y-006000 PR 1LX		PRO 92057603	ø 288 x 25 x 46.2		PR 1KW 4D-X-005001→	
				PRO 92098305	ø 323 x 30 x 59.5		⊖ arm.veh. 4D-X-005001→ →4D-Y-006000 PR 1LX		PRO 92057605	ø 288 x 25 x 46.2		PR 1KW 4D-X-005001→	
									PRO 92083503	ø 280 x 22 x 46.2		PR 1KW 4D-X-005001→	
									PRO 92083505	ø 280 x 22 x 46.2		PR 1KW 4D-X-005001→	
42100													
6.0 W12 quattro	01/01→09/02	309 / 420	Ate	2148401	[o] 21484	20.8	PR 1LJ Ø 360 mm	Luc	2355402	[–] 23554	17.2		
			Ate	2163901	[+] 21639	20.4	Teves ⊕ USA	Luc	2355481	[–] 23554	17.2		
			Luc	2311901	[+] 23119	18.5	PR 1LX Ø 323 mm	Luc	82037300				
			Bre	2377301	[+] 23773	17.5	PR 1ZL Ø 345 mm	Luc	82062800				
				98038700	L287		PR 1LJ Ø 360 mm		92098400	ø 269 x 22 x 46.4		⊖ arm.veh.	
			Bre	82500700			PR 1ZL Ø 345 mm		PRO 92057603	ø 288 x 25 x 46.2		PR 1KW 4D-X-005001→	
				92098300	ø 323 x 30 x 59.5		⊖ arm.veh. →4D-Y-006000 PR 1LX		PRO 92057605	ø 288 x 25 x 46.2		PR 1KW 4D-X-005001→	
				92112500	ø 345 x 30 x 52		PR 1ZL		PRO 92083503	ø 280 x 22 x 46.2		PR 1KW 4D-X-005001→	
				PRO 92098303	ø 323 x 30 x 59.5		⊖ arm.veh. →4D-Y-006000 PR 1LX		PRO 92083505	ø 280 x 22 x 46.2		PR 1KW 4D-X-005001→	
				PRO 92098305	ø 323 x 30 x 59.5		⊖ arm.veh. →4D-Y-006000 PR 1LX						
42200													
S 8 quattro	07/96→06/99	250 / 340	Luc	2145201	[+] 21452	18.5	→4D-X-004999	Luc	2114401	[–] 21144	16.6	→4D-X-004999	
			Luc	2311901	[+] 23119	18.5	4D-X-005001→ PR 1LX	Luc	2355402	[–] 23554	17.2	4D-X-005000→	
			Bre	2377301	[+] 23773	17.5	PR 1ZL	Luc	2355481	[–] 23554	17.2	4D-X-005000→	
			Bre	82500700			PR 1ZL	Luc	82037300			4D-X-005000→	
				92073200	ø 314 x 30 x 59.5		⊖ arm.veh. →4D-X-004999	Luc	82062800				
				92098300	ø 323 x 30 x 59.5		⊖ arm.veh. 4D-X-005001→ →4D-Y-006000 PR 1LX		92037100	ø 269 x 20 x 46.3		→4D-X-004999	
				92112500	ø 345 x 30 x 52		PR 1ZL		92098400	ø 269 x 22 x 46.4		⊖ arm.veh. 4D-X-005000→	
				PRO 92098303	ø 323 x 30 x 59.5		⊖ arm.veh. 4D-X-005001→ →4D-Y-006000 PR 1LX		PRO 92057603	ø 288 x 25 x 46.2		PR 1KW 4D-X-005001→	
				PRO 92098305	ø 323 x 30 x 59.5		⊖ arm.veh. 4D-X-005001→ →4D-Y-006000 PR 1LX		PRO 92057605	ø 288 x 25 x 46.2		PR 1KW 4D-X-005001→	
									PRO 92083503	ø 280 x 22 x 46.2		PR 1KW 4D-X-005001→	
									PRO 92083505	ø 280 x 22 x 46.2		PR 1KW 4D-X-005001→	
A8 (4E_) 10/02→07/10													
42300													
2.8 FSI	08/07→07/10	154 / 210	Ate	2376302	[+] 23763	20.3		Luc	2332601	[–] 23326	17.7		
			Ate	2376381	[+] 23763	20.3		Luc	2332681	[–] 23326	17.7		
			Ate	82062900				Luc	82054900				
			Ate	82071800				Luc	82063500				
				92132300	ø 321 x 30 x 59.4				92152200	ø 280 x 22 x 42.4			
				PRO 92132305	ø 321 x 30 x 59.4								
				TPM0008									

AUDI

AUDI

		kW / hp										
A8 (4E_) 10/02→07/10												
		42400	Ate		**2376302**	[+] 23763 20.3		Luc		**2332601**	[–] 23326 17.7	
3.0	07/03→05/05	162 / 220										
3.0	07/03→05/06	160 / 218	Ate		**2376381**	[+] 23763 20.3		Luc		**2332681**	[–] 23326 17.7	
3.0 TDI quattro	08/03→07/10	171 / 233										
3.0 TDI quattro	11/03→07/10	155 / 211	Ate		**82062900**			Luc		**82054900**		
			Ate		**82071800**			Luc		**82063500**		
					92098300	ø 323 x 30 x 59.5	→4E-5-003250 →07/04			**92152200**	ø 280 x 22 x 42.4	
					92132300	ø 321 x 30 x 59.4	4E-5-003251→ 07/04→					
				PRO	**92098303**	ø 323 x 30 x 59.5	→4E-5-003250 →07/04					
				PRO	**92098305**	ø 323 x 30 x 59.5	→4E-5-003250 →07/04					
				PRO	**92132305**	ø 321 x 30 x 59.4	4E-5-003251→ 07/04→					
					TPM0008		4E-5-003251→ 07/04→					
		42500	Ate		**2389601**	[+] 23896 20.5		Luc		**2332601**	[–] 23326 17.7	
3.2 FSI	06/05→07/10	191 / 260										
3.2 FSI quattro	06/05→07/10	191 / 260	Ate		**82062900**			Luc		**2332681**	[–] 23326 17.7	
3.7 quattro	10/02→05/06	206 / 280										
4.0 TDI quattro	05/03→07/05	202 / 275	Ate		**82505700**			Luc		**82054900**		
4.2 FSI quattro	06/06→07/10	257 / 350										
4.2 quattro	10/02→07/10	246 / 335		PRO	**92122203**	ø 360 x 34 x 59.6		Luc		**82063500**		
4.2 quattro	09/06→07/10	250 / 340										
4.2 TDI quattro	01/05→06/05	235 / 320			**TPM0008**				PRO	**92152303**	ø 310 x 22 x 42.4	
4.2 TDI quattro	07/05→07/10	240 / 326										
		42600	Ate		**2388501**	[+] 23885 20.5	⊖ ceramic brake	Luc		**2332601**	[–] 23326 17.7	⊖ ceramic brake
6.0 W12 quattro	12/03→07/10	331 / 450										
S8 quattro	06/06→07/10	331 / 450	Ate		**82062900**		⊖ ceramic brake	Luc		**2332681**	[–] 23326 17.7	⊖ ceramic brake
			Ate		**82505700**		⊖ ceramic brake	Luc		**82054900**		⊖ ceramic brake
				PRO	**92184203**	ø 385 x 36 x 60	⊖ ceramic brake	Luc		**82063500**		⊖ ceramic brake
					TPM0008				PRO	**92177003**	ø 335 x 22 x 42.4	⊖ ceramic brake
A8 (4H_) 11/09→												
		42700	Ate		**2515802**	[–] 25158 20	Ø 356 mm PR 1LL	Luc		**2521401**	[+] 25214 17.5	Ø 356 mm PR 1KY
2.0 TFSI hybrid	02/12→	155 / 211										
2.5 TFSI	07/12→	150 / 204	Ate		**2516002**	[–] 25160 20	Ø 380 mm PR 1LJ	Luc		**2521404**	[+] 25214 17.5	Ø 330 mm PR 1KW
3.0 TDI	09/11→	150 / 204										
3.0 TDI quattro	07/10→	184 / 250			**98049400**	L312						
3.0 TDI quattro	08/10→	155 / 211										
3.0 TDI quattro	11/12→	176 / 239										
3.0 TDI quattro	10/13→	190 / 258										
3.0 TFSI quattro	07/10→	213 / 290										
3.0 TFSI quattro	11/11→	228 / 310										
4.0 TFSI quattro	03/12→	309 / 420										
6.3 W12 quattro	01/11→	368 / 500										
		42800	Ate		**2515802**	[–] 25158 20	Ø 356 mm PR 1LL	Luc		**2521401**	[+] 25214 17.5	Ø 356 mm PR 1KY
3.0 TFSI quattro	06/10→	245 / 333										
			Ate		**2516002**	[–] 25160 20	Ø 380 mm PR 1LJ	Luc		**2521404**	[+] 25214 17.5	Ø 330 mm PR 1KW
					98049300	L297	→2010-07-05					
					98049400	L312	2010-07-05→					
		42900	Ate		**2515802**	[–] 25158 20	Ø 356 mm PR 1LL	Luc		**2521401**	[+] 25214 17.5	Ø 356 mm PR 1KY
4.0 TFSI quattro	10/13→	320 / 435										
4.2 TDI quattro	10/13→	283 / 385	Ate		**2516002**	[–] 25160 20	Ø 380 mm PR 1LJ	Luc		**2521404**	[+] 25214 17.5	Ø 330 mm PR 1KW
					98049400	L312	2010-06-14→					
		43000	Ate		**2515802**	[–] 25158 20	Ø 356 mm PR 1LL	Luc		**2521401**	[+] 25214 17.5	Ø 356 mm PR 1KY
4.2 FSI quattro	11/09→	273 / 371										
4.2 TDI quattro	11/09→	258 / 351	Ate		**2516002**	[–] 25160 20	Ø 380 mm PR 1LJ	Luc		**2521404**	[+] 25214 17.5	Ø 330 mm PR 1KW
					98049300	L297	→2010-06-14					
					98049400	L312	2010-06-14→					
		43100	Bre		**2484701**	[–] 24847 17	PR 1LN,1LX	Luc		**2521401**	[+] 25214 17.5	PR 1KZ
S8 quattro	04/12→	382 / 520										
					98049201	L264						

A8 Saloon (4D2, 4D8) 04/96→09/02 → A8 (4D2, 4D8), Page 68

A8 Saloon (4E_) 10/02→07/10 → A8 (4E_), Page 69

		kW / hp											
A8 Stufenheck (4D2, 4D8) 04/96→09/02 → A8 (4D2, 4D8), Page 68													
A8 Stufenheck (4E_) 10/02→07/10 → A8 (4E_), Page 69													
ALLROAD (4BH, C5) 05/00→08/05													
		43200	Luc		**2328001**	[+] 23280 18.3	PR 1LX	Luc		**2355402**	[–] 23554 17.2	
2.5 TDI quattro	05/00→08/05	132 / 180	Ate		**2376201**	[+] 23762 20.4	PR 1LA	Luc	epad	**2355481**	[–] 23554 17.2	
			Ate	epad	**2376281**	[+] 23762 20.4	PR 1LA	Luc		**82037300**		
			Ate		**82500400**			Luc		**82062800**		
				PRO	**92106703**	ø 320 x 30 x 46.5			PRO	**92117303**	ø 255 x 10 x 48	
				PRO	**92106705**	ø 320 x 30 x 46.5						
					TPM0008							
		43300	Ate		**2376201**	[+] 23762 20.4		Luc		**2355402**	[–] 23554 17.2	
2.5 TDI quattro	05/03→08/05	120 / 163	Ate	epad	**2376281**	[+] 23762 20.4		Luc	epad	**2355481**	[–] 23554 17.2	
			Ate		**82500400**			Luc		**82037300**		
				PRO	**92106703**	ø 320 x 30 x 46.5		Luc		**82062800**		
				PRO	**92106705**	ø 320 x 30 x 46.5			PRO	**92117303**	ø 255 x 10 x 48	
					TPM0008							
		43400	Luc		**2328001**	[+] 23280 18.3		Luc		**2355402**	[–] 23554 17.2	
2.7 quattro	09/00→08/05	187 / 254		PRO	**92106703**	ø 320 x 30 x 46.5		Luc	epad	**2355481**	[–] 23554 17.2	
2.7 T quattro	05/00→08/05	184 / 250		PRO	**92106705**	ø 320 x 30 x 46.5		Luc		**82037300**		
					TPM0008			Luc		**82062800**		
									PRO	**92117303**	ø 255 x 10 x 48	
		43500	Luc		**2328001**	[+] 23280 18.3		Luc		**2355402**	[–] 23554 17.2	
4.2 V8 quattro	07/02→08/05	220 / 299		PRO	**92106703**	ø 320 x 30 x 46.5		Luc	epad	**2355481**	[–] 23554 17.2	
				PRO	**92106705**	ø 320 x 30 x 46.5		Luc		**82037300**		
					TPM0008			Luc		**82062800**		
									PRO	**92176903**	ø 269 x 22 x 47.9	
ALLROAD Avant (4BH, C5) 05/00→08/05 → ALLROAD (4BH, C5), Page 71													
ALLROAD Estate (4BH, C5) 05/00→08/05 → ALLROAD (4BH, C5), Page 71													
CABRIOLET (8G7, B4) 11/92→08/00													
		43600	Luc		**2066921**	[–] 20669 19.6		Luc		**2114401**	[–] 21144 16.6	
1.8	01/97→08/00	92 / 125	Luc		**82062800**			Luc		**82062800**		
1.9 TDI	06/95→08/00	66 / 90										
2.6	06/93→08/00	110 / 150			**92054200**	ø 256 x 22 x 56.2	→8G-N-025000			**92026100**	ø 245 x 10 x 59.2	
2.6	05/95→08/00	102 / 139			**92060600**	ø 280 x 22 x 56.2	8G-P-000001→					
		43700	Luc		**2113802**	[+] 21138 19.5		Luc		**2114401**	[–] 21144 16.6	
2.8	11/92→08/00	128 / 174	Luc		**82062800**			Luc		**82062800**		
					92060500	ø 276 x 25 x 56.2				**92026100**	ø 245 x 10 x 59.2	
Q3 (8U) 06/11→													
		43800	Ate		**2433301**	[+] 24333 20.6		Luc		**2448301**	[–] 24483 17.2	
1.4 TFSI	10/13→	110 / 150	Ate		**82076800**			Luc	epad	**2448381**	[–] 24483 17.2	
2.0 TDI	09/11→	100 / 136		PRO	**92120503**	ø 312 x 25 x 49.7		Luc		**82509000**		
2.0 TDI	09/11→	103 / 140			**TPM0008**				PRO	**92140803**	ø 282 x 12 x 48.5	
2.0 TDI	05/13→	130 / 177								**TPM0008**		
2.0 TDI quattro	06/11→	120 / 163										
2.0 TDI quattro	06/11→	130 / 177										
2.0 TDI quattro	01/12→	103 / 140										
2.0 TFSI quattro	06/11→	125 / 170										
2.0 TFSI quattro	06/11→	155 / 211										
RS 2.5 quattro	10/13→	228 / 310										

AUDI

AUDI

Q5 (8R) 11/08→

			30 kW / hp												
		43900		Bre		2564301	[0] 25643 16.7	PR 1LP	Luc		2460602	[–] 24606 17.7	
2.0 Hybrid quattro	09/12→	183 / 249											
2.0 TDI	05/13→	110 / 150		Bre		2564302	[0] 25643 15.6	PR 1LC →2013-07	Luc	epad	2460682	[–] 24606 17.7	
2.0 TDI quattro	05/13→	110 / 150											
3.0 TDI quattro	06/12→	184 / 250		Luc		2474301	[+] 24743 19.4	PR 1LJ	Luc		82054900		PR 1KE,2EL,1KF
				Luc	epad	2474381	[+] 24743 19.4	PR 1LJ	Luc		82514200		PR 1KW
						98049400	L312	PR 1LV		PRO	92160103	ø 300 x 12 x 36.2	PR 1KW,2EK
						98050300	L342	PR 1LB,1LC,1LE,1LP		PRO	92238303	ø 330 x 22 x 36.2	PR 1KE,2EL,1KF
				Luc		82518300		PR 1LJ			TPM0008		
					PRO	92229203	ø 345 x 30 x 52	PR 1LE,1LP,1LJ					
						TPM0008							
		44000		Luc		2474301	[+] 24743 19.4		Luc		2460602	[–] 24606 17.7	
2.0 TDI	11/10→	100 / 136											
2.0 TDI	11/10→	105 / 143		Luc	epad	2474381	[+] 24743 19.4		Luc	epad	2460682	[–] 24606 17.7	
2.0 TDI quattro	11/08→	120 / 163											
2.0 TDI quattro	08/09→	100 / 136											
2.0 TDI quattro	08/09→	105 / 143		Luc		82518300		→2011-06-20	Luc		82514200		
2.0 TFSI quattro	11/08→	155 / 211											
2.0 TFSI quattro	08/09→	132 / 180			PRO	92160003	ø 320 x 29.8 x 52.1	→2011-06-20		PRO	92160103	ø 300 x 12 x 36.2	
					PRO	92229303	ø 320 x 30 x 52.4	2011-06-20→			TPM0008		
						TPM0008							
		44100		Luc		2474301	[+] 24743 19.4		Luc		2460602	[–] 24606 17.7	
2.0 TDI quattro	11/08→	125 / 170											
				Luc	epad	2474381	[+] 24743 19.4		Luc	epad	2460682	[–] 24606 17.7	
				Luc		82518300			Luc		82514200		
					PRO	92160003	ø 320 x 29.8 x 52.1	→2011-06-20		PRO	92160103	ø 300 x 12 x 36.2	
					PRO	92229303	ø 320 x 30 x 52.4	2011-06-20→			TPM0008		
						TPM0008							
		44200		Bre		2564302	[0] 25643 15.6		Luc		2460602	[–] 24606 17.7	
2.0 TDI quattro	06/12→	130 / 177											
2.0 TFSI quattro	06/12→	165 / 224				98050300	L342	left →2013-07-22	Luc	epad	2460682	[–] 24606 17.7	
						TPM0008			Luc		82514200		
										PRO	92160103	ø 300 x 12 x 36.2	
											TPM0008		
		44300		Bre		2484701	[–] 24847 17	PR 1LV,1ZK	Luc		2460601	[–] 24606 17.7	PR 1KE,2EL,1KF,2EJ
2.0 TDI quattro	11/13→	140 / 190											
3.0 TDI quattro	11/13→	190 / 258		Ate		2516002	[–] 25160 20	PR 1LB,1LE	Luc		2460602	[–] 24606 17.7	PR 1KW,2EK
				Bre		2564301	[0] 25643 16.7	PR 1LP	Luc	epad	2460681	[–] 24606 17.7	PR 1KE,2EL,1KF,2EJ
				Luc		2474301	[+] 24743 19.4	PR 1LJ	Luc	epad	2460682	[–] 24606 17.7	PR 1KW,2EK
				Luc	epad	2474381	[+] 24743 19.4	PR 1LJ	Luc		82054900		PR 1KE,2EL,1KF,2EJ
						98049400	L312	PR 1LV,1ZK	Luc		82514200		PR 1KW,2EK
				Luc		82518300		PR 1LJ		PRO	92160103	ø 300 x 12 x 36.2	PR 1KW,2EK
					PRO	92229203	ø 345 x 30 x 52	PR 1LE,1LP		PRO	92238303	ø 330 x 22 x 36.2	PR 1KE,2EL,1KF,2EJ
						TPM0008					TPM0008		
		44400		Luc		2474301	[+] 24743 19.4	PR 1LA,1ZB Ø 320 mm PR 1ZT,1LJ Ø 345 mm	Luc		2460601	[–] 24606 17.7	PR 1KE Ø 330 mm
2.0 TFSI hybrid quattro	06/11→	155 / 211		Luc	epad	2474381	[+] 24743 19.4	PR 1LA,1ZB Ø 320 mm PR 1ZT,1LJ Ø 345 mm	Luc		2460602	[–] 24606 17.7	PR 1KW Ø 300 mm
				Luc		82518300		PR 1LA,1LJ Ø 320 mm →2011-06-20 PR 1ZT Ø 320 mm Ø 345 mm	Luc	epad	2460681	[–] 24606 17.7	PR 1KE Ø 330 mm
									Luc	epad	2460682	[–] 24606 17.7	PR 1KW Ø 300 mm
					PRO	92229203	ø 345 x 30 x 52	PR 1LJ,1ZT					
					PRO	92229303	ø 320 x 30 x 52.4	PR 1LA,1ZB	Luc		82054900		PR 1KE Ø 330 mm

→

kW / hp

Q5 (8R) 11/08→

44400													
2.0 TFSI hybrid quattro 06/11→ 155 / 211			TPM0008				Luc		82514200		PR 1KW Ø 300 mm
								PRO	92160103	ø 300 x 12 x 36.2	PR 1KW
								PRO	92160303	ø 330 x 22 x 36.2	PR 1KE
									TPM0008		
44500											
2.0 TFSI quattro 05/13→ 162 / 220			TPM0008				Luc		2460602	[–] 24606 17.7	
							Luc	epad	2460682	[–] 24606 17.7	
								PRO	92160103	ø 300 x 12 x 36.2	
									TPM0008		
44600											
3.0 TDI quattro 11/08→ 155 / 211	Luc		2474301	[+] 24743 19.4	PR 1LA,1ZB Ø 320 mm PR 1ZT,1LJ Ø 345 mm		Luc		2460601	[–] 24606 17.7	PR 1KE Ø 330 mm
	Luc	epad	2474381	[+] 24743 19.4	PR 1LA,1ZB Ø 320 mm PR 1ZT,1LJ Ø 345 mm		Luc		2460602	[–] 24606 17.7	PR 1KW Ø 300 mm
	Luc		82518300		PR 1LA,1LJ Ø 320 mm →2011-06-20 PR 1ZT Ø 320 mm Ø 345 mm		Luc	epad	2460681	[–] 24606 17.7	PR 1KE Ø 330 mm
		PRO	92160003	ø 320 x 29.8 x 52.1	PR 1LA →2011-06-20		Luc	epad	2460682	[–] 24606 17.7	PR 1KW Ø 300 mm
		PRO	92160203	ø 345 x 29.3 x 51.8	PR 1LJ →2011-06-20		Luc		82054900		PR 1KE Ø 330 mm
		PRO	92229203	ø 345 x 30 x 52	PR 1LJ 2011-06-20→ PR 1ZT		Luc		82514200		PR 1KW Ø 300 mm
		PRO	92229303	ø 320 x 30 x 52.4	PR 1LA,1ZB 2011-06-20→			PRO	92160103	ø 300 x 12 x 36.2	PR 1KW
								PRO	92160303	ø 330 x 22 x 36.2	PR 1KE
			TPM0008						TPM0008		
44700											
3.0 TDI quattro 11/08→ 176 / 240	Luc		2474301	[+] 24743 19.4			Luc		2460601	[–] 24606 17.7	
	Luc	epad	2474381	[+] 24743 19.4			Luc	epad	2460681	[–] 24606 17.7	
	Luc		82518300				Luc		82054900		
		PRO	92160203	ø 345 x 29.3 x 51.8	→2011-06-20			PRO	92160303	ø 330 x 22 x 36.2	
		PRO	92229203	ø 345 x 30 x 52	2011-06-20→				TPM0008		
			TPM0008								
44800											
3.0 TDI quattro 06/12→ 180 / 245 3.0 TFSI quattro 06/12→ 200 / 272	Bre		2564301	[o] 25643 16.7	→2013-07-22		Luc		2460601	[–] 24606 17.7	
	Bre		2564305	[o] 25643 16.7	2013-07-22→		Luc	epad	2460681	[–] 24606 17.7	
			98050300	L342	left →2013-07-22		Luc		82054900		
		PRO	92229203	ø 345 x 30 x 52				PRO	92238303	ø 330 x 22 x 36.2	
			TPM0008						TPM0008		
44900											
3.2 FSI quattro 11/08→ 199 / 270	Luc		2474301	[+] 24743 19.4			Luc		2460601	[–] 24606 17.7	
	Luc	epad	2474381	[+] 24743 19.4			Luc	epad	2460681	[–] 24606 17.7	
	Luc		82518300		→2011-06-20		Luc		82054900		
		PRO	92160203	ø 345 x 29.3 x 51.8	→2011-06-20			PRO	92160303	ø 330 x 22 x 36.2	
		PRO	92229203	ø 345 x 30 x 52	2011-06-20→				TPM0008		
			TPM0008								
45000											
SQ5 TDI quattro 12/12→ 230 / 313			98049400	L312			Luc		2460601	[–] 24606 17.7	
			TPM0008				Luc	epad	2460681	[–] 24606 17.7	
							Luc		82054900		
								PRO	92238303	ø 330 x 22 x 36.2	
									TPM0008		
45100											
SQ5 TFSI quattro 05/13→ 260 / 354	Bre		2484701	[–] 24847 17	PR 1LV,1ZK		Luc		2460601	[–] 24606 17.7	PR 1KE,2EL,1KF,2EJ

AUDI

AUDI

		kW / hp										
Q5 (8R) 11/08→												
		45100	Ate		2516002	[–] 25160 20	PR 1LB,1LE	Luc		2460602	[–] 24606 17.7	PR 1KW,2EK
SQ5 TFSI quattro	05/13→	260 / 354	Bre		2564301	[o] 25643 16.7	PR 1LP	Luc	epad	2460681	[–] 24606 17.7	PR 1KE,2EL,1KF,2EJ
			Luc		2474301	[+] 24743 19.4	PR 1LJ	Luc	epad	2460682	[–] 24606 17.7	PR 1KW,2EK
			Luc	epad	2474381	[+] 24743 19.4	PR 1LJ	Luc		82054900		PR 1KE,2EL,1KF,2EJ
					98049400	L312	PR 1LV,1ZK	Luc		82514200		PR 1KW,2EK
					98050300	L342	left PR 1LB,1LC,1LE,1LP →2013-07		PRO	92160103	ø 300 x 12 x 36.2	PR 1KW,2EK
			Luc		82518300		PR 1LJ		PRO	92238303	ø 330 x 22 x 36.2	PR 1KE,2EL,1KF,2EJ
				PRO	92229203	ø 345 x 30 x 52	PR 1LE,1LP			TPM0008		
					TPM0008							
		45200	Ate		2516002	[–] 25160 20		Luc		2460601	[–] 24606 17.7	
SQ5 TFSI quattro	03/14→	260 / 354			98049400	L312		Luc	epad	2460681	[–] 24606 17.7	
					TPM0008			Luc		82054900		
									PRO	92238303	ø 330 x 22 x 36.2	
										TPM0008		
Q7 (4L) 03/06→12/10												
		45300	Bre		2369302	[o] 23693 16.7	⊖ ceramic brake	Bre		2369402	[o] 23694 16.7	⊖ ceramic brake
3.0 TDI	03/06→05/08	171 / 233	Bre	epad	2369381	[o] 23693 16.7	⊖ ceramic brake	Bre	epad	2369481	[o] 23694 16.7	⊖ ceramic brake
3.0 TDI	03/06→05/10	155 / 211			98030900	L420				98031000	L255	
3.0 TDI	11/07→	176 / 240	Bre		82076500		⊖ ceramic brake	Bre		82076600		⊖ ceramic brake
3.0 TDI	06/09→05/12	165 / 224			92121700	ø 350 x 34 x 68.8	left			92122000	ø 330 x 28 x 73.5	
3.0 TDI	05/10→	150 / 204			92121800	ø 350 x 34 x 68.8	right		PRO	92122005	ø 330 x 28 x 73.5	
3.0 TDI	05/11→	180 / 245		PRO	92121705	ø 350 x 34 x 68.8	left			TPM0005		
3.0 TFSI	05/10→	200 / 272		PRO	92121805	ø 350 x 34 x 68.8	right			91062400	ø 210 x 30	
3.0 TFSI	05/10→	245 / 333			TPM0005					97032200		
3.0 TFSI	05/11→	206 / 280										
3.6 FSI	08/06→05/10	206 / 280										
3.6 quattro	09/07→12/10	206 / 280										
		45400	Bre		2369302	[o] 23693 16.7	PR 1LF ⊖ ceramic brake	Bre		2369402	[o] 23694 16.7	PR 1KF ⊖ ceramic brake
3.0 TDI	09/08→12/10	209 / 284	Bre	epad	2369381	[o] 23693 16.7	PR 1LF ⊖ ceramic brake	Bre	epad	2369481	[o] 23694 16.7	PR 1KF ⊖ ceramic brake
					98030900	L420	PR 1LF ⊖ ceramic brake	Bre		2401001	[o] 24010 16.7	PR 2EA ⊖ ceramic brake
					98047800	L365	PR 1LW ⊕ ceramic brake			98031000	L255	PR 1KF,2EA ⊖ ceramic brake
			Bre		82076500		PR 1LF ⊖ ceramic brake			98047900	L275	PR 2EF ⊕ ceramic brake
					92121700	ø 350 x 34 x 68.8	left PR 1LF ⊖ ceramic brake	Bre		82076600		PR 1KF,2EA ⊖ ceramic brake
					92121800	ø 350 x 34 x 68.8	right PR 1LF ⊖ ceramic brake			92122000	ø 330 x 28 x 73.5	PR 1KF ⊖ ceramic brake
				PRO	92121705	ø 350 x 34 x 68.8	left PR 1LF ⊖ ceramic brake		PRO	92122005	ø 330 x 28 x 73.5	PR 1KF ⊖ ceramic brake
				PRO	92121805	ø 350 x 34 x 68.8	right PR 1LF ⊖ ceramic brake		PRO	92151403	ø 358 x 28 x 73.5	PR 2EA ⊖ ceramic brake
					TPM0005					TPM0005		
		45500	Bre		2369302	[o] 23693 16.7	⊖ ceramic brake	Bre		2401001	[o] 24010 16.7	⊖ ceramic brake
4.2 FSI	03/06→05/10	257 / 350	Bre	epad	2369381	[o] 23693 16.7	⊖ ceramic brake			98031000	L255	
4.2 quattro	09/06→12/10	231 / 314			98030900	L420		Bre		82076600		⊖ ceramic brake
4.2 quattro	09/07→12/10	231 / 314	Bre		82076500		⊖ ceramic brake		PRO	92151403	ø 358 x 28 x 73.5	
4.2 TDI	03/07→06/09	240 / 326			92121700	ø 350 x 34 x 68.8	left			TPM0005		
					92121800	ø 350 x 34 x 68.8	right			91062400	ø 210 x 30	

→

		kW / hp											
Q7 (4L) 03/06→12/10													
		45500			92121705	ø 350 x 34 x 68.8	left			97032200		
4.2 FSI	03/06→05/10	257 / 350			92121805	ø 350 x 34 x 68.8	right					
4.2 quattro	09/06→12/10	231 / 314			TPM0005							
4.2 quattro	09/07→12/10	231 / 314										
4.2 TDI	03/07→06/09	240 / 326										
		45600	Bre		2369302	[o] 23693 16.7	⊖ ceramic brake	Bre		2461401	[o] 24614 16.6	⊖ ceramic brake
4.2 TDI	05/09→	250 / 340	Bre	epad	2369381	[o] 23693 16.7	⊖ ceramic brake			98038900	L240	
					98030900	L420				92151403	ø 358 x 28 x 73.5	
			Bre		82076500		⊖ ceramic brake			TPM0005		
					92121700	ø 350 x 34 x 68.8	left			91062400	ø 210 x 30	
					92121800	ø 350 x 34 x 68.8	right			97032200		
					92121705	ø 350 x 34 x 68.8	left					
					92121805	ø 350 x 34 x 68.8	right					
					TPM0005							
		45700			98047800	L365				98047900	L275	
6.0 TDI	09/08→	368 / 500			TPM0005					TPM0005		
										91062400	ø 210 x 30	
										97032200		
R8 04/07→													
		45800	Bre		2451601	[+] 24516 16.7	PR 1LA ⊖ ceramic brake			TPM0008		
4.2 FSI quattro	04/07→09/10	309 / 420			TPM0008			Bre		2061005	[–] 20610	
4.2 FSI quattro	07/10→	316 / 430										
5.2 FSI quattro	04/09→	386 / 525										
5.2 FSI quattro	11/10→	412 / 560										
5.2 FSI quattro	05/12→	404 / 549										
		45900	Bre		2451601	[+] 24516 16.7	PR 1LA,1LJ ⊖ ceramic brake			TPM0008		
5.2 FSI quattro	07/14→	419 / 570			98047100	L395	PR 1LE,1LW ⊕ ceramic brake	Bre		2061005	[–] 20610	
					TPM0008							
R8 Spyder 02/10→													
		46000	Bre		2451601	[+] 24516 16.7	PR 1LA ⊖ ceramic brake			TPM0008		
4.2 FSI quattro	09/10→	316 / 430			TPM0008			Bre		2061005	[–] 20610	
5.2 FSI quattro	02/10→	386 / 525										
5.2 FSI quattro	11/11→	412 / 560										
5.2 FSI quattro	05/12→	404 / 549										
		46100	Bre		2451601	[+] 24516 16.7	⊖ ceramic brake			TPM0008		
4.2 quattro	09/12→	308 / 419			TPM0008							
TT (8J3) 08/06→													
		46200	Ate		2358701	[+] 23587 20.3		Luc		2391401	[o] 23914 17.2	
1.8	09/10→	125 / 170	Ate	epad	2358781	[+] 23587 20.3		Luc	epad	2391481	[o] 23914 17.2	
			Ate		82076800			Luc		82509000		
					92120503	ø 312 x 25 x 49.7				92159403	ø 286 x 12 x 58.4	
					TPM0008					TPM0008		
		46300	Ate		2358701	[+] 23587 20.3		Luc		2391401	[o] 23914 17.2	
1.8 TFSI	06/08→	118 / 160										
2.0 TDI quattro	06/08→	125 / 170	Ate	epad	2358781	[+] 23587 20.3		Luc	epad	2391481	[o] 23914 17.2	
2.0 TFSI	08/06→06/10	147 / 200										
2.0 TFSI	05/10→	155 / 211										
2.0 TFSI quattro	06/08→06/10	147 / 200	Ate		82062900			Luc		82509000		
2.0 TFSI quattro	05/10→	155 / 211	Ate		82076800			Luc		82063300		
					92120503	ø 312 x 25 x 49.7				92159403	ø 286 x 12 x 58.4	
					TPM0008					TPM0008		
		46400	Ate		2391301	[+] 23913 20.3		Luc		2391401	[o] 23914 17.2	
2.0	09/10→	195 / 265										

AUDI

AUDI

		kW / hp										
TT (8J3) 08/06→												
		46400	Luc	82518200			Luc	2391481	[o] 23914 17.2			
2.0	09/10→	195 / 265		92160503	ø 340 x 30 x 49		Luc	82502000				
				TPM0008				92160603	ø 310 x 22 x 58.6			
								TPM0008				
		46500	Ate	2391301	[+] 23913 20.3		Luc	2391402	[o] 23914 17.2			
2.0 quattro	05/08→	195 / 265	Ate	82062900			Luc	2391482	[o] 23914 17.2			
2.0 TFSI quattro	05/08→	200 / 272	Ate	82071800			Luc	82502000				
3.2 V6 quattro	08/06→06/10	184 / 250		92160503	ø 340 x 30 x 49		Luc	82063300				
				TPM0008				92160603	ø 310 x 22 x 58.6			
								TPM0008				
		46600	Bre	2409803	[o] 24098 16		Luc	2391402	[o] 23914 17.2			
2.5 TFSI RS quattro	07/09→	250 / 340		98042300	L370		Luc	2391482	[o] 23914 17.2			
2.5 TFSI RS quattro	05/11→	265 / 360		TPM0008			Luc	82502000				
								92160603	ø 310 x 22 x 58.6			
								TPM0008				
TT (8N3) 10/98→06/06												
		46700	Ate	2191102	[–] 21911 20.6		Luc	2355402	[–] 23554 17.2			
1.8 T	10/98→06/06	132 / 180	Ate	2339201	[+] 23392 20.6		Luc	2355481	[–] 23554 17.2			
1.8 T	09/02→06/06	110 / 150	Ate	82029300			Luc	82037300				
1.8 T	09/05→06/06	120 / 163	Ate	82062900			Luc	82062800				
1.8 T	09/05→06/06	140 / 190		92098503	ø 312 x 25 x 34			92082503	ø 232 x 9 x 39.3			
				TPM0008				TPM0008				
		46800	Ate	2191102	[–] 21911 20.6		Luc	2355402	[–] 23554 17.2			
1.8 T quattro	10/98→06/06	132 / 180	Ate	2339201	[+] 23392 20.6		Luc	2355481	[–] 23554 17.2			
1.8 T quattro	10/98→06/06	165 / 224	Ate	82029300			Luc	82037300				
1.8 T quattro	03/05→06/06	176 / 240	Ate	82062900			Luc	82062800				
1.8 T quattro	09/05→06/06	140 / 190		92098503	ø 312 x 25 x 34			92105803	ø 239 x 9 x 33.5			
				TPM0008				92098603	ø 256 x 22 x 36.7			
								TPM0008				
		46900	Ate	2148401	[o] 21484 20.8		Luc	2355402	[–] 23554 17.2			
3.2 VR6 quattro	07/03→06/06	184 / 250		98029500	L270		Luc	2355481	[–] 23554 17.2			
			Ate	82059200			Luc	82502000				
			Ate	82062900			Luc	82062800				
				TPM0008				92098603	ø 256 x 22 x 36.7			
								TPM0008				
TT Coupe 09/14→												
		47000	Ate	2358701	[+] 23587 20.3	PR 1LJ,1LL	Luc	2391401	[o] 23914 17.2	PR 1KZ,2ED,2EG		
2.0 TDI	09/14→	135 / 184	Ate	2358781	[+] 23587 20.3	PR 1LJ,1LL	Luc	2391481	[o] 23914 17.2	PR 1KZ,2ED,2EG		
2.0 TFSI	09/14→	169 / 230	Ate	2391301	[+] 23913 20.3	PR 1LN	Luc	82502000		PR 2EG		
			Ate	82076800		PR 1LJ,1LL	Luc	82509000		PR 1KZ,12ED		

→

TT Coupe 09/14→

		47000	Luc		82518200		PR 1LN		PRO	92160603	ø 310 x 22 x 58.6	PR 2EG
2.0 TDI	09/14→	135 / 184		PRO	92120503	ø 312 x 25 x 49.7	PR 1LJ,1LL			TPM0008		PR 1KZ,2ED
2.0 TFSI	09/14→	169 / 230		PRO	92160503	ø 340 x 30 x 49	PR 1LN					
					TPM0008		PR 1LJ.1LL					
		47100	Ate		2358701	[+] 23587 20.3	PR 1LJ,1LL	Luc		2391401	[o] 23914 17.2	
2.0 TFSI quattro	09/14→	169 / 230	Ate	epad	2358781	[+] 23587 20.3	PR 1LJ,1LL	Luc	epad	2391481	[o] 23914 17.2	
			Ate		2391301	[+] 23913 20.3	PR 1LN	Luc		82509000		
			Ate		82076800		PR 1LJ,1LL		PRO	92159403	ø 286 x 12 x 58.4	
			Luc		82518200		PR 1LN			TPM0008		
				PRO	92120503	ø 312 x 25 x 49.7	PR 1LJ,1LL					
				PRO	92160503	ø 340 x 30 x 49	PR 1LN					
					TPM0008							

TT Roadster (8J9) 03/07→06/10

		47200	Ate		2358701	[+] 23587 20.3		Luc		2391401	[o] 23914 17.2	
1.8	09/10→	125 / 170	Ate	epad	2358781	[+] 23587 20.3		Luc	epad	2391481	[o] 23914 17.2	
			Ate		82076800			Luc		82509000		
				PRO	92120503	ø 312 x 25 x 49.7			PRO	92159403	ø 286 x 12 x 58.4	
					TPM0008					TPM0008		
		47300	Ate		2358701	[+] 23587 20.3		Luc		2391401	[o] 23914 17.2	
1.8 TFSI	06/08→	118 / 160	Ate	epad	2358781	[+] 23587 20.3		Luc	epad	2391481	[o] 23914 17.2	
2.0 TDI quattro	06/08→	125 / 170	Ate		82062900			Luc		82509000		
2.0 TFSI	05/10→	155 / 211	Ate		82076800			Luc		82063300		
2.0 TFSI quattro	06/08→06/10	147 / 200		PRO	92120503	ø 312 x 25 x 49.7			PRO	92159403	ø 286 x 12 x 58.4	
2.0 TFSI quattro	05/10→	155 / 211			TPM0008					TPM0008		
		47400	Ate		2391301	[+] 23913 20.3		Luc		2391401	[o] 23914 17.2	
2.0	09/11→	195 / 265	Luc		82518200			Luc	epad	2391481	[o] 23914 17.2	
				PRO	92160503	ø 340 x 30 x 49		Luc		82502000		
					TPM0008				PRO	92160603	ø 310 x 22 x 58.6	
										TPM0008		
		47500	Ate		2391301	[+] 23913 20.3		Luc		2391402	[o] 23914 17.2	
2.0 quattro	05/08→	195 / 265	Ate		82062900			Luc	epad	2391482	[o] 23914 17.2	
2.0 TFSI quattro	05/08→	200 / 272	Ate		82071800			Luc		82502000		
3.2 V6 quattro	03/07→06/10	184 / 250		PRO	92160503	ø 340 x 30 x 49		Luc		82063300		
					TPM0008				PRO	92160603	ø 310 x 22 x 58.6	
										TPM0008		
		47600	Ate		2358701	[+] 23587 20.3		Luc		2391401	[o] 23914 17.2	
2.0 TFSI	03/07→06/10	147 / 200	Ate	epad	2358781	[+] 23587 20.3		Luc	epad	2391481	[o] 23914 17.2	
			Ate		82062900			Luc		82509000		
			Ate		82076800			Luc		82063300		
			Luc		82518200				PRO	92159403	ø 286 x 12 x 58.4	

AUDI

AUDI

		kW / hp											
TT Roadster (8J9) 03/07→06/10													
		47600											
2.0 TFSI	03/07→06/10	147 / 200		PRO	92120503	ø 312 x 25 x 49.7			TPM0008				
					TPM0008								
		47700	Bre		2409803	[o] 24098 16		Luc	2391402	[o] 23914 17.2			
2.5 TFSI RS quattro	07/09→	250 / 340			98042300	L370		Luc	2391482	[o] 23914 17.2			
2.5 TFSI RS quattro	03/12→	265 / 360			TPM0008			Luc	82502000				
									PRO 92160603	ø 310 x 22 x 58.6			
									TPM0008				
TT Roadster (8N9) 10/99→06/06													
		47800	Ate		2191102	[–] 21911 20.6		Luc	2355402	[–] 23554 17.2			
1.8 T	10/99→06/06	132 / 180	Ate		2339201	[+] 23392 20.6		Luc	2355481	[–] 23554 17.2			
1.8 T	01/01→06/06	110 / 150	Ate		82029300			Luc	82037300				
1.8 T	09/05→06/06	120 / 163	Ate		82062900			Luc	82062800				
1.8 T	09/05→06/06	140 / 190		PRO	92098503	ø 312 x 25 x 34			PRO 92082503	ø 232 x 9 x 39.3			
					TPM0008				TPM0008				
		47900	Ate		2191102	[–] 21911 20.6		Luc	2355402	[–] 23554 17.2			
1.8 T quattro	10/99→08/02	134 / 182	Ate		2339201	[+] 23392 20.6	PR A8S+9U1	Luc	2355481	[–] 23554 17.2			
			Ate		82029300			Luc	82037300		PR 1KK,1KE		
				PRO	92098503	ø 312 x 25 x 34			PRO 92082503	ø 232 x 9 x 39.3	PR 1KK		
					TPM0008				PRO 92105803	ø 239 x 9 x 33.5	PR 1KE		
									PRO 92098603	ø 256 x 22 x 36.7	PR 1KF		
									TPM0008				
		48000	Ate		2191102	[–] 21911 20.6		Luc	2355402	[–] 23554 17.2			
1.8 T quattro	10/99→06/06	165 / 224	Ate		2339201	[+] 23392 20.6		Luc	2355481	[–] 23554 17.2			
1.8 T quattro	02/00→06/06	132 / 180	Ate		82029300			Luc	82037300				
1.8 T quattro	09/05→06/06	140 / 190	Ate		82062900			Luc	82062800				
				PRO	92098503	ø 312 x 25 x 34			PRO 92105803	ø 239 x 9 x 33.5			
					TPM0008				PRO 92098603	ø 256 x 22 x 36.7			
									TPM0008				
		48100	Ate		2148401	[o] 21484 20.8		Luc	2355402	[–] 23554 17.2			
3.2 VR6 quattro	07/03→06/06	184 / 250			98029500	L270		Luc	2355481	[–] 23554 17.2			
			Ate		82059200			Luc	82502000				
			Ate		82062900			Luc	82062800				
					TPM0008				PRO 92098603	ø 256 x 22 x 36.7			
									TPM0008				

BENTLEY

BENTLEY

		kW / hp											
ARNAGE 04/98→10/09													
		48200	Ate		2148401	[o] 21484 20.8		Ate	2330902	[o] 23309 17.3			
4.4 V8	04/98→10/09	260 / 354											
		48300	Ate		2148401	[o] 21484 20.8		Ate	2330902	[o] 23309 17.3			
6.7	01/02→08/05	313 / 426											
6.8 V8	09/99→10/09	298 / 405						Ate	82057500				
6.8 V8 T	02/02→10/09	336 / 457											

→

BENTLEY

BENTLEY

kW / hp												
ARNAGE 04/98→10/09												
48300								Ate		82062900		
6.7 01/02→08/05 313 / 426												
6.8 V8 09/99→10/09 298 / 405												
6.8 V8 T 02/02→10/09 336 / 457												
ARNAGE Saloon 04/98→10/09 → ARNAGE, Page 78												
ARNAGE Stufenheck 04/98→10/09 → ARNAGE, Page 78												
AZURE 08/99→06/06												
48400	Ate		2148401	[o]	21484	20.8		Ate		2330902	[o] 23309	17.3
6.75 V8 08/99→06/06 300 / 408												
6.75 V8 Mulliner 08/99→06/06 313 / 426												
CONTINENTAL 08/99→10/02												
48500	Ate		2148401	[o]	21484	20.8		Ate		2330902	[o] 23309	17.3
6.75 V8 T Mulliner 08/99→10/02 313 / 426												
CONTINENTAL Cabriolet 12/06→ → CONTINENTAL Convertible, Page 79												
CONTINENTAL Convertible 12/06→												
48600	Ate		2382201	[+]	23822	20.4	PR 1LL ⊖ ceramic brake	Luc		2332607	[–] 23326	17.7 PR 1KK ⊖ ceramic brake
6.0 12/06→ 412 / 560			TPM0008							TPM0008		
6.0 03/10→ 463 / 630												
6.0 All-wheel Drive 08/07→ 449 / 610												
CONTINENTAL Coupe 06/03→12/11												
48700	Ate		2148401	[o]	21484	20.8		Luc		2332607	[–] 23326	17.7 PR 1KK ⊖ ceramic brake
6.0 06/03→12/11 412 / 560	Ate		2382201	[+]	23822	20.4	PR 1LL ⊖ ceramic brake			TPM0008		
			TPM0008									
48800	Ate		2382201	[+]	23822	20.4	PR 1LL ⊖ ceramic brake	Luc		2332607	[–] 23326	17.7 PR 1KK ⊖ ceramic brake
6.0 09/07→12/11 449 / 610			TPM0008							TPM0008		
6.0 03/10→ 463 / 630												
6.0 11/10→12/11 423 / 575												
CONTINENTAL FLYING SPUR 03/05→												
48900	Ate		2148401	[o]	21484	20.8		Luc		2332607	[–] 23326	17.7 PR 1KK ⊖ ceramic brake
6.0 03/05→ 412 / 560	Ate		2382201	[+]	23822	20.4	PR 1LL ⊖ ceramic brake			TPM0008		
			TPM0008									
49000	Ate		2382201	[+]	23822	20.4	PR 1LL ⊖ ceramic brake	Luc		2332607	[–] 23326	17.7 PR 1KK ⊖ ceramic brake
6.0 09/08→ 449 / 610			TPM0008							TPM0008		
CONTINENTAL FLYING SPUR Saloon 03/05→ → CONTINENTAL FLYING SPUR, Page 79												
CONTINENTAL FLYING SPUR Stufenheck 03/05→ → CONTINENTAL FLYING SPUR, Page 79												
MULSANNE 09/09→												
49100										TPM0005		
6.8 09/09→ 377 / 513												

BERTONE

BERTONE

kW / hp												
FREECLIMBER 2 03/92→12/99												
49200										91039400	ø 254 x 46	
1.6 03/92→12/99 74 / 100												
FREECLIMBER Mk II 03/92→12/99 → FREECLIMBER 2, Page 79												

BMW

BMW

kW / hp												
1 (E81) 09/06→09/12												
49300	Luc		2391503	[o]	23915	17.8	⊖ M-technology	Luc		2362303	[o] 23623	17.4 ⊖ M-technology
116 d 11/08→09/12 85 / 116												
116 i 03/07→09/12 85 / 115	Bre		2431601	[o]	24316	17	⊕ M-technology	Luc	epad	2362381	[o] 23623	17.4 ⊖ M-technology
116 i 03/07→09/12 90 / 122			98031200	L635			→2010-03 ⊖ M-technology	Ate		2392701	[o] 23927	17.3 ⊕ M-technology
116 i 11/08→09/12 90 / 122			98043700	L650			2010-03→ ⊖ M-technology	Ate	epad	2392781	[o] 23927	17.3 ⊕ M-technology
			98046000	L695			⊕ M-technology			98031300	L1093	→2010-03 ⊖ M-technology ⊕ M-technology
	Bre		82504600				⊕ M-technology			98043900	L1110	2010-03→ ⊖ M-technology
		PRO	92132703	ø 284 x 22 x 73			⊖ M-technology	Ate		82028700		⊕ M-technology

BMW

BMW

		kW / hp										
1 (E81) 09/06→09/12												
49300				TPM0003			Ate		82062900		⊕ M-technology
116 d	11/08→09/12	85 / 116						PRO	92132903	ø 280 x 10 x 65	⊖ M-technology
116 i	03/07→09/12	85 / 115						PRO	92133003	ø 300 x 20 x 66.1	⊕ M-technology
116 i	03/07→09/12	90 / 122							TPM0003		
116 i	11/08→09/12	90 / 122							91053300	ø 160.5 x 20	
									97012600		
49400			Luc	2391503	[o] 23915 17.8	⊖ M-technology	Luc		2362303	[o] 23623 17.4	⊕ M-technology
116 d	01/11→12/11	66 / 90	Bre	2431601	[o] 24316 17	⊕ M-technology	Luc	epad	2362381	[o] 23623 17.4	⊕ M-technology
				98031200	L635	→2010-03 ⊖ M-technology			98031300	L1093	→2010-03 ⊖ M-technology ⊕ M-technology
				98043700	L650	2010-03→ ⊖ M-technology			98043900	L1110	2010-03→ ⊖ M-technology
				98046000	L695	⊕ M-technology		PRO	92132903	ø 280 x 10 x 65	⊖ M-technology
			Bre	82504600		⊕ M-technology			TPM0003		
				PRO 92132703	ø 284 x 22 x 73	⊖ M-technology			91053300	ø 160.5 x 20	
				TPM0003					97012600		
49500			Luc	2391503	[o] 23915 17.8	⊖ M-technology	Luc		2362303	[o] 23623 17.4	⊖ M-technology
116 i	08/07→09/12	89 / 121	Bre	2431601	[o] 24316 17	⊕ M-technology	Luc	epad	2362381	[o] 23623 17.4	⊖ M-technology
				98031200	L635	→2010-03 ⊖ M-technology	Ate		2392701	[o] 23927 17.3	⊕ M-technology
				98043700	L650	2010-03→ ⊖ M-technology	Ate	epad	2392781	[o] 23927 17.3	⊕ M-technology
				98046000	L695	⊕ M-technology			98031300	L1093	→2010-03 ⊖ M-technology ⊕ M-technology
			Luc	82072200		⊕ M-technology			98043900	L1110	2010-03→ ⊖ M-technology
			Bre	82504600		⊕ M-technology	Ate		82028700		⊕ M-technology
				PRO 92132703	ø 284 x 22 x 73	⊖ M-technology	Ate		82062900		⊕ M-technology
				TPM0003				PRO	92132903	ø 280 x 10 x 65	⊖ M-technology
								PRO	92133003	ø 300 x 20 x 66.1	⊕ M-technology
									TPM0003		
									91053300	ø 160.5 x 20	
									97012600		
49600			Luc	2391503	[o] 23915 17.8	⊖ M-technology	Ate		2392701	[o] 23927 17.3	⊖ M-technology 2007-03→ ⊕ M-technology
118 d	09/06→09/12	100 / 136									
118 d	09/06→09/12	105 / 143	Bre	2431601	[o] 24316 17	⊕ M-technology	Ate	epad	2392781	[o] 23927 17.3	⊖ M-technology 2007-03→ ⊕ M-technology
				98031200	L635	→2010-03 ⊖ M-technology			98031300	L1093	→2010-03 ⊖ M-technology ⊕ M-technology
				98043700	L650	2010-03→ ⊖ M-technology			98043900	L1110	2010-03→ ⊖ M-technology
				98046000	L695	⊕ M-technology	Ate		82028700		⊖ M-technology 2007-03→ ⊕ M-technology
			Bre	82504600		⊕ M-technology	Ate		82062900		
				PRO 92132803	ø 292 x 22 x 73	⊖ M-technology		PRO	92133003	ø 300 x 20 x 66.1	⊖ M-technology 2007-03→ ⊕ M-technology
				PRO 92132805	ø 292 x 22 x 73	⊖ M-technology			TPM0003		
				TPM0003					91053300	ø 160.5 x 20	
									97012600		
49700			Luc	2391503	[o] 23915 17.8	⊖ M-technology	Luc		2362303	[o] 23623 17.4	⊖ M-technology
118 i	09/06→09/12	100 / 136									
118 i	09/06→09/12	105 / 143	Bre	2431601	[o] 24316 17	⊕ M-technology	Luc	epad	2362381	[o] 23623 17.4	⊖ M-technology
				98031200	L635	→2010-03 ⊖ M-technology	Ate		2392701	[o] 23927 17.3	⊕ M-technology

→

30 kW / hp

1 (E81) 09/06→09/12

49700														
118 i	09/06→09/12	100 / 136			98043700	L650	2010-03→ ⊖ M-technology		Ate		2392781	[o] 23927 17.3	⊕ M-technology
118 i	09/06→09/12	105 / 143			98046000	L695	⊕ M-technology				98031300	L1093	→2010-03 ⊖ M-technology ⊕ M-technology
			Bre		82504600		⊕ M-technology				98043900	L1110	2010-03→ ⊖ M-technology
				PRO	92132803	ø 292 x 22 x 73	⊖ M-technology		Ate		82028700		⊕ M-technology
				PRO	92132805	ø 292 x 22 x 73	⊖ M-technology		Ate		82062900		⊕ M-technology
					TPM0003					PRO	92133103	ø 296 x 10.5 x 65.1	⊖ M-technology
										PRO	92133003	ø 300 x 20 x 66.1	⊕ M-technology
											TPM0003		
											91053300	ø 160.5 x 20	
											97012600		
49800			Ate		2409601	[o] 24096 20.3	⊖ M-technology		Ate		2392701	[o] 23927 17.3	⊖ M-technology 2007-03→ ⊕ M-technology
120 d	09/06→09/12	120 / 163											
120 d	09/06→09/12	130 / 177	Ate	epad	2409681	[o] 24096 20.3	⊖ M-technology		Ate	epad	2392781	[o] 23927 17.3	⊖ M-technology 2007-03→ ⊕ M-technology
			Bre		2431601	[o] 24316 17	⊕ M-technology				98031300	L1093	→2010-03 ⊖ M-technology ⊕ M-technology
					98031200	L635	→2010-03 ⊖ M-technology				98043900	L1110	2010-03→ ⊖ M-technology
					98043700	L650	2010-03→ ⊖ M-technology		Ate		82028700		⊖ M-technology 2007-03→ ⊕ M-technology
					98046000	L695	⊕ M-technology		Ate		82062900		
			Bre		82504600		⊕ M-technology			PRO	92133003	ø 300 x 20 x 66.1	⊖ M-technology 2007-03→ ⊕ M-technology
			Ate		82062900		⊖ M-technology				TPM0003		
			Ate		82074500		⊖ M-technology				91053300	ø 160.5 x 20	
				PRO	92137703	ø 300 x 24 x 73.5	⊖ M-technology				97012600		
					TPM0003								
49900			Ate		2409601	[o] 24096 20.3	⊖ M-technology		Luc		2362303	[o] 23623 17.4	⊖ M-technology
120 i	09/06→09/12	115 / 156											
120 i	09/06→09/12	120 / 163	Ate	epad	2409681	[o] 24096 20.3	⊖ M-technology		Luc	epad	2362381	[o] 23623 17.4	⊖ M-technology
120 i	09/06→09/12	125 / 170	Bre		2431601	[o] 24316 17	⊕ M-technology		Ate		2392701	[o] 23927 17.3	⊕ M-technology
					98031200	L635	→2010-03 ⊖ M-technology		Ate	epad	2392781	[o] 23927 17.3	⊕ M-technology
					98043700	L650	2010-03→ ⊖ M-technology				98031300	L1093	→2010-03 ⊖ M-technology ⊕ M-technology
					98046000	L695	⊕ M-technology				98043900	L1110	2010-03→ ⊖ M-technology
			Bre		82504600		⊕ M-technology		Ate		82028700		⊕ M-technology
			Ate		82062900		⊖ M-technology		Ate		82062900		⊕ M-technology
			Ate		82074500		⊖ M-technology			PRO	92133103	ø 296 x 10.5 x 65.1	⊖ M-technology
				PRO	92137703	ø 300 x 24 x 73.5	⊖ M-technology			PRO	92133003	ø 300 x 20 x 66.1	⊕ M-technology
					TPM0003						TPM0003		
											91053300	ø 160.5 x 20	
											97012600		
50000			Ate		2409601	[o] 24096 20.3	⊖ M-technology		Ate		2392701	[o] 23927 17.3	⊖ M-technology
123 d	03/07→09/12	150 / 204											
130 i	09/06→09/12	190 / 258	Ate	epad	2409681	[o] 24096 20.3	⊖ M-technology		Ate	epad	2392781	[o] 23927 17.3	⊖ M-technology
130 i	09/06→09/12	195 / 265	Bre		2431601	[o] 24316 17	⊕ M-technology		Bre		2431501	[o] 24315 16.9	⊕ M-technology
					98043800	L723	⊖ M-technology 2010-03→				98031300	L1093	→2010-03 ⊖ M-technology ⊕ M-technology
					98046000	L695	⊖ M-technology →2010-03 ⊕ M-technology				98043900	L1110	2010-03→ ⊖ M-technology
			Bre		82504600		⊕ M-technology		Bre		82504500		⊕ M-technology

BMW

BMW

		kW / hp										
1 (E81) 09/06→09/12												
50000			Ate		82062900		⊖ M-technology	Ate		82028700		⊖ M-technology
123 d	03/07→09/12	150 / 204										
130 i	09/06→09/12	190 / 258	Ate		82074500		⊖ M-technology	Ate		82062900		⊖ M-technology
130 i	09/06→09/12	195 / 265		PRO	92137803	ø 330 x 24 x 73	⊖ M-technology		PRO	92154903	ø 300 x 20 x 66	⊖ M-technology
					TPM0003					TPM0003		
										91049300	ø 185 x 20	
										97003100		
1 (E87) 11/03→09/12												
50100			Luc		2391503	[o] 23915 17.8	⊖ M-technology	Luc		2362303	[o] 23623 17.4	⊖ M-technology
116 d	12/08→09/12	85 / 116										
116 i	11/03→09/12	90 / 122	Bre		2431601	[o] 24316 17	⊕ M-technology	Luc	epad	2362381	[o] 23623 17.4	⊖ M-technology
					98031200	L635	→2010-03 ⊖ M-technology	Ate		2392701	[o] 23927 17.3	⊕ M-technology
					98043700	L650	2010-03→ ⊖ M-technology	Ate	epad	2392781	[o] 23927 17.3	⊕ M-technology
					98046000	L695	⊕ M-technology			98031300	L1093	→2010-03 ⊖ M-technology ⊕ M-technology
			Luc		82072200		⊕ M-technology			98043900	L1110	2010-03→ ⊖ M-technology
			Bre		82504600		⊕ M-technology	Luc		82060100		
				PRO	92132703	ø 284 x 22 x 73	⊖ M-technology	Ate		82028700		⊕ M-technology
					TPM0003			Ate		82062900		⊕ M-technology
									PRO	92132903	ø 280 x 10 x 65	⊖ M-technology
									PRO	92133003	ø 300 x 20 x 66.1	⊕ M-technology
										TPM0003		
										91053300	ø 160.5 x 20	
										97012600		
50200			Luc		2391503	[o] 23915 17.8	⊖ M-technology	Luc		2362303	[o] 23623 17.4	⊕ M-technology
116 d	01/11→12/11	66 / 90										
			Bre		2431601	[o] 24316 17	⊕ M-technology	Luc	epad	2362381	[o] 23623 17.4	⊕ M-technology
					98031200	L635	→2010-03 ⊖ M-technology			98031300	L1093	→2010-03 ⊖ M-technology ⊕ M-technology
					98043700	L650	2010-03→ ⊖ M-technology			98043900	L1110	2010-03→ ⊖ M-technology
					98046000	L695	⊕ M-technology		PRO	92132903	ø 280 x 10 x 65	⊖ M-technology
			Bre		82504600		⊕ M-technology			TPM0003		
				PRO	92132703	ø 284 x 22 x 73	⊖ M-technology			91053300	ø 160.5 x 20	
					TPM0003					97012600		
50300			Luc		2391503	[o] 23915 17.8	⊖ M-technology	Luc		2362303	[o] 23623 17.4	⊖ M-technology
116 i	11/03→09/12	85 / 115										
116 i	11/03→09/12	90 / 122	Bre		2431601	[o] 24316 17	⊕ M-technology	Luc	epad	2362381	[o] 23623 17.4	⊖ M-technology
					98031200	L635	→03/10 ⊖ M-technology	Ate		2392701	[o] 23927 17.3	⊕ M-technology
					98043700	L650	03/10→ ⊖ M-technology	Ate	epad	2392781	[o] 23927 17.3	⊕ M-technology
					98046000	L695	⊕ M-technology			98031300	L1093	→03/10 ⊖ M-technology ⊕ M-technology
			Luc		82072200		⊕ M-technology			98043900	L1110	03/10→ ⊖ M-technology
			Bre		82504600		⊕ M-technology	Luc		82060100		
				PRO	92132703	ø 284 x 22 x 73	⊖ M-technology	Ate		82028700		⊕ M-technology
					TPM0003			Ate		82062900		⊕ M-technology
									PRO	92132903	ø 280 x 10 x 65	⊖ M-technology
									PRO	92133003	ø 300 x 20 x 66.1	⊕ M-technology

→

1 (E87) 11/03→09/12

50300													
116 i	11/03→09/12	85 / 115								TPM0003			
116 i	11/03→09/12	90 / 122								91053300	ø 160.5 x 20		
										97012600			
50400			Luc		2391503	[o] 23915 17.8	⊖ M-technology	Luc		2362303	[o] 23623 17.4	⊖ M-technology	
116 i	08/07→09/12	89 / 121	Bre		2431601	[o] 24316 17	⊕ M-technology	Luc	epad	2362381	[o] 23623 17.4	⊖ M-technology	
					98031200	L635	→2010-03 ⊖ M-technology	Ate		2392701	[o] 23927 17.3	⊕ M-technology	
					98043700	L650	2010-03→ ⊖ M-technology	Ate	epad	2392781	[o] 23927 17.3	⊕ M-technology	
					98046000	L695	⊕ M-technology			98031300	L1093	→2010-03 ⊖ M-technology ⊕ M-technology	
			Bre		82504600		⊕ M-technology			98043900	L1110	2010-03→ ⊖ M-technology	
				PRO	92132703	ø 284 x 22 x 73	⊖ M-technology	Luc		82060100			
					TPM0003			Ate		82028700		⊕ M-technology	
								Ate		82062900		⊕ M-technology	
									PRO	92132903	ø 280 x 10 x 65	⊖ M-technology	
									PRO	92133003	ø 300 x 20 x 66.1	⊕ M-technology	
										TPM0003			
										91053300	ø 160.5 x 20		
										97012600			
50500			Luc		2391503	[o] 23915 17.8	⊖ M-technology	Luc		2362303	[o] 23623 17.4		
118 d	11/03→09/12	90 / 122	Bre		2431601	[o] 24316 17	⊕ M-technology	Luc	epad	2362381	[o] 23623 17.4		
					98031200	L635	→2010-03 ⊖ M-technology			98031300	L1093	→2010-03 ⊖ M-technology ⊕ M-technology	
					98043700	L650	2010-03→ ⊖ M-technology			98043900	L1110	2010-03→ ⊖ M-technology	
					98046000	L695	⊕ M-technology	Luc		82060100			
			Luc		82072200		⊕ M-technology	Ate		82028700		⊕ M-technology	
			Bre		82504600		⊕ M-technology	Ate		82062900			
				PRO	92132703	ø 284 x 22 x 73	⊖ M-technology		PRO	92132903	ø 280 x 10 x 65		
				PRO	92132803	ø 292 x 22 x 73	⊖ M-technology			TPM0003			
				PRO	92132805	ø 292 x 22 x 73	⊖ M-technology			91053300	ø 160.5 x 20		
					TPM0003					97012600			
50600			Luc		2391503	[o] 23915 17.8	⊖ M-technology	Ate		2392701	[o] 23927 17.3		
118 d	11/03→09/12	100 / 136	Bre		2431601	[o] 24316 17	⊕ M-technology	Ate	epad	2392781	[o] 23927 17.3		
					98031200	L635	→03/10 ⊖ M-technology			98031300	L1093	→03/10 ⊖ M-technology ⊕ M-technology	
					98043700	L650	03/10→ ⊖ M-technology			98043900	L1110	03/10→ ⊖ M-technology	
					98046000	L695	⊕ M-technology	Luc		82060100			
			Luc		82072200		⊕ M-technology	Ate		82028700		⊕ M-technology	
			Bre		82504600		⊕ M-technology	Ate		82062900			
				PRO	92132703	ø 284 x 22 x 73	⊖ M-technology		PRO	92133003	ø 300 x 20 x 66.1		
				PRO	92132803	ø 292 x 22 x 73	⊖ M-technology			TPM0003			
				PRO	92132805	ø 292 x 22 x 73	⊖ M-technology			91053300	ø 160.5 x 20		
					TPM0003					97012600			
50700			Luc		2391503	[o] 23915 17.8	⊖ M-technology	Ate		2392701	[o] 23927 17.3		
118 d	11/03→09/12	105 / 143											

BMW

BMW

		kW / hp											
1 (E87) 11/03→09/12													
118 d	11/03→09/12	50700 105 / 143	Bre		**2431601**	[o] 24316 17	⊕ M-technology	Ate		**2392781**	[o] 23927 17.3	
					98031200	L635	→03/10 ⊖ M-technology			**98031300**	L1093	→03/10 ⊖ M-technology ⊕ M-technology
					98043700	L650	03/10→ ⊖ M-technology			**98043900**	L1110	03/10→ ⊖ M-technology
					98046000	L695	⊕ M-technology	Luc		**82060100**		
			Luc		**82072200**		⊖ M-technology	Ate		**82028700**		⊕ M-technology
			Bre		**82504600**		⊕ M-technology	Ate		**82062900**		
				PRO	**92132703**	ø 284 x 22 x 73	⊖ M-technology		PRO	**92133003**	ø 300 x 20 x 66.1	
				PRO	**92132803**	ø 292 x 22 x 73	⊖ M-technology			**TPM0003**		
				PRO	**92132805**	ø 292 x 22 x 73	⊖ M-technology			**91053300**	ø 160.5 x 20	
					TPM0003					**97012600**		
118 i	07/04→09/12	50800 95 / 129	Luc		**2391503**	[o] 23915 17.8	⊖ M-technology	Luc		**2362303**	[o] 23623 17.4	⊖ M-technology
			Bre		**2431601**	[o] 24316 17	⊕ M-technology	Luc	epad	**2362381**	[o] 23623 17.4	⊖ M-technology
					98031200	L635	→03/10 ⊖ M-technology	Ate		**2392701**	[o] 23927 17.3	⊕ M-technology
					98043700	L650	03/10→ ⊖ M-technology	Ate	epad	**2392781**	[o] 23927 17.3	⊕ M-technology
					98046000	L695	⊕ M-technology			**98031300**	L1093	→03/10 ⊖ M-technology ⊕ M-technology
			Luc		**82072200**		⊕ M-technology			**98043900**	L1110	03/10→ ⊖ M-technology
			Bre		**82504600**		⊕ M-technology	Luc		**82060100**		
				PRO	**92132703**	ø 284 x 22 x 73	⊖ M-technology	Ate		**82028700**		⊕ M-technology
				PRO	**92132803**	ø 292 x 22 x 73	⊖ M-technology	Ate		**82062900**		⊕ M-technology
				PRO	**92132805**	ø 292 x 22 x 73	⊖ M-technology		PRO	**92132903**	ø 280 x 10 x 65	⊖ M-technology
					TPM0003				PRO	**92133103**	ø 296 x 10.5 x 65.1	
										TPM0003		
										91053300	ø 160.5 x 20	
										97012600		
118 i	07/04→09/12	50900 100 / 136	Luc		**2391503**	[o] 23915 17.8	⊖ M-technology	Luc		**2362303**	[o] 23623 17.4	⊖ M-technology
118 i	07/04→09/12	105 / 143	Bre		**2431601**	[o] 24316 17	⊕ M-technology	Luc	epad	**2362381**	[o] 23623 17.4	⊖ M-technology
					98031200	L635	→03/10 ⊖ M-technology	Ate		**2392701**	[o] 23927 17.3	⊕ M-technology
					98043700	L650	03/10→ ⊖ M-technology	Ate	epad	**2392781**	[o] 23927 17.3	⊕ M-technology
					98046000	L695	⊕ M-technology			**98031300**	L1093	→03/10 ⊖ M-technology ⊕ M-technology
			Luc		**82072200**		⊕ M-technology			**98043900**	L1110	03/10→ ⊖ M-technology
			Bre		**82504600**		⊕ M-technology	Luc		**82060100**		
				PRO	**92132703**	ø 284 x 22 x 73	⊖ M-technology	Ate		**82028700**		⊕ M-technology
				PRO	**92132803**	ø 292 x 22 x 73	⊖ M-technology	Ate		**82062900**		⊕ M-technology
				PRO	**92132805**	ø 292 x 22 x 73	⊖ M-technology		PRO	**92133103**	ø 296 x 10.5 x 65.1	
					TPM0003					**TPM0003**		
										91053300	ø 160.5 x 20	
										97012600		
118 i	03/07→12/07	51000 125 / 170	Luc		**2391503**	[o] 23915 17.8	⊖ M-technology	Luc		**2362303**	[o] 23623 17.4	⊖ M-technology
			Bre		**2431601**	[o] 24316 17	⊕ M-technology	Luc	epad	**2362381**	[o] 23623 17.4	⊖ M-technology
					98031200	L635	⊖ M-technology	Ate		**2392701**	[o] 23927 17.3	⊕ M-technology

→

30 kW / hp

1 (E87) 11/03→09/12

118 i	03/07→12/07	51000 125 / 170		98046000	L695	⊕ M-technology	Ate	2392781	[o] 23927 17.3	⊕ M-technology
			Bre	82504600		⊕ M-technology		98031300	L1093	
				92132703	ø 284 x 22 x 73	⊖ M-technology	Ate	82028700		⊕ M-technology
				TPM0003			Ate	82062900		⊕ M-technology
								92132903	ø 280 x 10 x 65	⊖ M-technology
								92133003	ø 300 x 20 x 66.1	⊕ M-technology
								TPM0003		
								91053300	ø 160.5 x 20	
								97012600		
120 d	11/03→09/12	51100 120 / 163	Ate	2393501	[o] 23935 17.8	⊖ M-technology →03/07	Ate	2392701	[o] 23927 17.3	
120 d	11/03→09/12	130 / 177	Ate	2393581	[o] 23935 17.8	⊖ M-technology →03/07	Ate	2392781	[o] 23927 17.3	
			Ate	2409601	[o] 24096 20.3	03/07→ ⊖ M-technology		98031300	L1093	→03/10 ⊖ M-technology ⊕ M-technology
			Ate	2409681	[o] 24096 20.3	03/07→ ⊖ M-technology		98043900	L1110	03/10→ ⊖ M-technology
			Bre	2431601	[o] 24316 17	⊕ M-technology	Ate	82028700		
				98031200	L635	→03/10 ⊖ M-technology	Ate	82062900		
				98043700	L650	03/10→ ⊖ M-technology		92133003	ø 300 x 20 x 66.1	
				98046000	L695	⊕ M-technology		TPM0003		
			Luc	82072200		⊕ M-technology		91053300	ø 160.5 x 20	
			Bre	82504600		⊕ M-technology		97012600		
			Ate	82062900		03/07→ ⊖ M-technology				
			Ate	82074500		03/07→ ⊖ M-technology				
				92132803	ø 292 x 22 x 73	⊖ M-technology →03/07				
				92132805	ø 292 x 22 x 73	⊖ M-technology →03/07				
				92137703	ø 300 x 24 x 73.5	03/07→ ⊖ M-technology				
				TPM0003						
120 i	11/03→09/12	51200 110 / 150	Luc	2391503	[o] 23915 17.8	01/06→ ⊖ M-technology	Luc	2362303	[o] 23623 17.4	⊖ M-technology
			Ate	2393501	[o] 23935 17.8	⊖ M-technology →01/06	Luc	2362381	[o] 23623 17.4	⊖ M-technology
			Ate	2393581	[o] 23935 17.8	⊖ M-technology →01/06	Ate	2392701	[o] 23927 17.3	⊕ M-technology
			Bre	2431601	[o] 24316 17	⊕ M-technology	Ate	2392781	[o] 23927 17.3	⊕ M-technology
				98031200	L635	→03/10 ⊖ M-technology		98031300	L1093	→03/10 ⊖ M-technology ⊕ M-technology
				98043700	L650	03/10→ ⊖ M-technology		98043900	L1110	03/10→ ⊖ M-technology
				98046000	L695	⊕ M-technology	Luc	82060100		
			Luc	82072200		⊕ M-technology	Ate	82028700		⊕ M-technology
			Bre	82504600		⊕ M-technology	Ate	82062900		⊕ M-technology
			Ate	82062900		⊖ M-technology		92133103	ø 296 x 10.5 x 65.1	⊖ M-technology
				92132803	ø 292 x 22 x 73	⊖ M-technology →03/07		92133003	ø 300 x 20 x 66.1	⊕ M-technology
				92132805	ø 292 x 22 x 73	⊖ M-technology →03/07		TPM0003		
				92137703	ø 300 x 24 x 73.5	03/07→ ⊖ M-technology		91053300	ø 160.5 x 20	
				TPM0003				97012600		
120 i	11/03→09/12	51300 115 / 156	Ate	2409601	[o] 24096 20.3	⊖ M-technology	Luc	2362303	[o] 23623 17.4	⊖ M-technology
120 i	11/03→09/12	120 / 163								

BMW

BMW

		kW / hp											
1 (E87) 11/03→09/12													
120 i	11/03→09/12	125 / 170	Ate	epad	2409681	[o] 24096 20.3	⊖ M-technology	Luc	epad	2362381	[o] 23623 17.4	⊖ M-technology
			Bre		2431601	[o] 24316 17	⊕ M-technology	Ate		2392701	[o] 23927 17.3	⊕ M-technology
					98031200	L635	→03/10 ⊖ M-technology	Ate	epad	2392781	[o] 23927 17.3	⊕ M-technology
					98043700	L650	03/10→ ⊖ M-technology			98031300	L1093	→03/10 ⊖ M-technology ⊕ M-technology
					98046000	L695	⊕ M-technology			98043900	L1110	03/10→ ⊖ M-technology
			Luc		82072200		⊕ M-technology	Luc		82060100		
			Bre		82504600		⊕ M-technology	Ate		82028700		⊕ M-technology
			Ate		82062900		⊖ M-technology	Ate		82062900		⊕ M-technology
			Ate		82074500		⊖ M-technology		PRO	92133103	ø 296 x 10.5 x 65.1	⊖ M-technology
				PRO	92137703	ø 300 x 24 x 73.5	⊖ M-technology		PRO	92133003	ø 300 x 20 x 66.1	⊕ M-technology
					TPM0003					TPM0003		
										91053300	ø 160.5 x 20	
										97012600		
		51400										
123 d	03/07→09/12	150 / 204	Ate		2409601	[o] 24096 20.3	⊖ M-technology	Ate		2392701	[o] 23927 17.3	⊖ M-technology
			Ate	epad	2409681	[o] 24096 20.3	⊖ M-technology	Ate	epad	2392781	[o] 23927 17.3	⊖ M-technology
			Bre		2431601	[o] 24316 17	⊕ M-technology	Bre		2431501	[o] 24315 16.9	⊕ M-technology
					98043800	L723	⊖ M-technology 03/10→			98031300	L1093	→03/10 ⊖ M-technology ⊕ M-technology
					98046000	L695	⊖ M-technology →03/10 ⊕ M-technology			98043900	L1110	03/10→ ⊖ M-technology
			Luc		82072200		⊕ M-technology	Ate		82028700		⊖ M-technology
			Bre		82504600		⊕ M-technology	Ate		82062900		⊖ M-technology
			Ate		82062900		⊖ M-technology		PRO	92133003	ø 300 x 20 x 66.1	⊕ M-technology
			Ate		82074500		⊖ M-technology		PRO	92154903	ø 300 x 20 x 66	⊖ M-technology
				PRO	92137803	ø 330 x 24 x 73	⊖ M-technology			TPM0003		
					TPM0003					91049300	ø 185 x 20	
		51500										
130 i	03/05→09/12	190 / 258	Ate		2409601	[o] 24096 20.3	⊖ M-technology	Ate		2392701	[o] 23927 17.3	
130 i	03/05→09/12	195 / 265	Ate	epad	2409681	[o] 24096 20.3	⊖ M-technology	Ate	epad	2392781	[o] 23927 17.3	
			Bre		2431601	[o] 24316 17	⊕ M-technology	Bre		2431501	[o] 24315 16.9	⊕ M-technology
					98043800	L723	⊖ M-technology 03/10→			98031300	L1093	→03/10 ⊖ M-technology ⊕ M-technology
					98046000	L695	⊖ M-technology →03/10 ⊕ M-technology			98043900	L1110	03/10→ ⊖ M-technology
			Luc		82072200			Ate		82028700		
			Bre		82504600		⊕ M-technology	Ate		82062900		
			Ate		82062900		⊖ M-technology		PRO	92133003	ø 300 x 20 x 66.1	⊕ M-technology
			Ate		82074500		⊖ M-technology		PRO	92154903	ø 300 x 20 x 66	⊖ M-technology
				PRO	92137803	ø 330 x 24 x 73	⊖ M-technology			TPM0003		
					TPM0003					91049300	ø 185 x 20	
										97012600		
		51600										
135 i	09/08→12/10	224 / 305	Bre		2431601	[o] 24316 17		Bre		2431501	[o] 24315 16.9	
					98046000	L695				98031300	L1093	
			Bre		82504600			Bre		82504500		
					TPM0003					TPM0003		

→

		kW / hp										
1 (E87) 11/03→09/12												
51600												
135 i	09/08→12/10	224 / 305								**91049300**	ø 185 x 20	
										97003100		
1 (F20) 11/10→												
51700			Ate		**2501401**	[o] 25014	⊖ M-technology ⊖ perform. brk. sys.	Ate		**2502902**	[o] 25029 17	⊕ perform. brk. sys.
114 d	10/12→	70 / 95			**98047500**	L675	left	Ate		**2530701**	[o] 25307 17.2	⊖ perform. brk. sys.
114 i	11/11→	75 / 102										
116 d	12/10→	85 / 116										
116 d	11/12→	85 / 116										
116 i	12/10→	100 / 136	Ate		**82062900**					**98047600**	L1045	
				PRO	**92238403**	ø 284 x 22 x 73.3	⊖ perform. brk. sys. ⊖ M-technology	Ate		**82062900**		
					TPM0003				PRO	**92261003**	ø 290 x 11 x 66.3	⊖ M-technology ⊖ perform. brk. sys.
										TPM0003		
										91053300	ø 160.5 x 20	
										97012600		
51800			Ate		**2501401**	[o] 25014	⊖ M-technology ⊖ perform. brk. sys.	Ate		**2502902**	[o] 25029 17	Ø 345 mm ⊕ perform. brk. sys.
118 d	12/10→	100 / 136										
118 d	12/10→	105 / 143			**98047500**	L675	left	Ate		**2530701**	[o] 25307 17.2	⊖ perform. brk. sys.
			Ate		**82062900**					**98047600**	L1045	
				PRO	**92238403**	ø 284 x 22 x 73.3	⊖ perform. brk. sys. ⊖ M-technology	Ate		**82062900**		
					TPM0003				PRO	**92261003**	ø 290 x 11 x 66.3	⊖ M-technology ⊖ perform. brk. sys.
										TPM0003		
										91053300	ø 160.5 x 20	
										97012600		
51900			Ate		**2550601**	[o] 25506 18.2	⊖ M-technology	Ate		**2502902**	[o] 25029 17	⊕ M-technology
118 d xDrive	07/13→	105 / 143			**98047500**	L675	left	Ate		**2530701**	[o] 25307 17.2	⊖ M-technology
			Ate		**82062900**					**98047600**	L1045	
				PRO	**92238503**	ø 300 x 22 x 73.2	⊖ M-technology ⊖ perform. brk. sys.	Ate		**82062900**		
					TPM0003				PRO	**92261003**	ø 290 x 11 x 66.3	⊖ M-technology ⊖ perform. brk. sys.
										TPM0003		
										91053300	ø 160.5 x 20	
										97012600		
52000			Ate		**2550601**	[o] 25506 18.2	⊖ M-technology ⊖ perform. brk. sys.	Ate		**2502902**	[o] 25029 17	⊕ perform. brk. sys.
118 i	11/10→	125 / 170										
120 d xDrive	02/12→	135 / 184			**98047500**	L675	left	Ate		**2530701**	[o] 25307 17.2	⊖ perform. brk. sys.
			Ate		**82062900**					**98047600**	L1045	
				PRO	**92238503**	ø 300 x 22 x 73.2	⊖ M-technology ⊖ perform. brk. sys.	Ate		**82062900**		
					TPM0003					**TPM0003**		
										91053300	ø 160.5 x 20	
										97012600		
52100			Ate		**2550601**	[o] 25506 18.2	⊖ M-technology ⊖ perform. brk. sys.	Ate		**2502902**	[o] 25029 17	Ø 345 mm ⊕ perform. brk. sys.
120 d	12/10→	120 / 163										
120 d	12/10→	135 / 184			**98047500**	L675	left	Ate		**2530701**	[o] 25307 17.2	⊖ perform. brk. sys.
			Ate		**82062900**					**98047600**	L1045	
				PRO	**92238503**	ø 300 x 22 x 73.2	⊖ M-technology ⊖ perform. brk. sys.	Ate		**82062900**		
					TPM0003					**TPM0003**		
										91053300	ø 160.5 x 20	

BMW

BMW

		kW / hp											
1 (F20) 11/10→													
		52100											
120 d	12/10→	120 / 163											
120 d	12/10→	135 / 184											
		52200	Bos		2519901	[o] 25199 19.2	⊖ M-technology ⊕ KP ⊕ KR 2012-03→ ⊖ reinf.brake	Ate		2502902	[o] 25029 17	⊕ M-technology	
120 d	01/11→	147 / 200	Ate		2550601	[o] 25506 18.2	⊖ M-technology ⊖ KP ⊖ KR 2012-03→ ⊕ KP ⊕ KR ⊕ reinf.brake	Ate		2530701	[o] 25307 17.2	⊖ M-technology	
					98047500	L675	left			98047600	L1045		
			Ate		82517800		⊖ M-technology ⊕ KP ⊕ KR 2012-03→			TPM0003			
				PRO	92176103	ø 312 x 24 x 73.5	⊖ M-technology ⊕ KP ⊕ KR 2012-03→			91053300	ø 160.5 x 20		
				PRO	92238503	ø 300 x 22 x 73.2	⊖ M-technology ⊖ perform. brk. sys. ⊖ KP ⊖ KR			97012600			
					TPM0003								
		52300	Ate		2550601	[o] 25506 18.2	⊖ M-technology	Ate		2502902	[o] 25029 17	⊕ M-technology	
120 d xDrive	01/11→	147 / 200			98047500	L675	left	Ate		2530701	[o] 25307 17.2	⊖ M-technology	
			Ate		82062900					98047600	L1045		
				PRO	92238503	ø 300 x 22 x 73.2	⊖ M-technology ⊖ perform. brk. sys.	Ate		82062900			
					TPM0003					TPM0003			
										91053300	ø 160.5 x 20		
										97012600			
		52400	Bos		2519901	[o] 25199 19.2	→05/12 ⊖ M-technology ⊖ perform. brk. sys.	Ate		2502902	[o] 25029 17	⊕ perform. brk. sys.	
125 d	08/11→	155 / 211			98047500	L675	left	Ate		2530701	[o] 25307 17.2	⊖ perform. brk. sys.	
125 d	08/11→	160 / 218	Ate		82517800		⊖ M-technology ⊖ perform. brk. sys.			98047600	L1045		
125 i	08/11→	160 / 218		PRO	92176103	ø 312 x 24 x 73.5	⊖ M-technology ⊖ perform. brk. sys.	Ate		82062900			
					TPM0003					TPM0003			
										91053300	ø 160.5 x 20		
										97012600			
		52500	Bos		2519901	[o] 25199 19.2	⊖ M-technology	Ate		2502902	[o] 25029 17	⊕ M-technology	
125 i	03/13→	175 / 238			98047500	L675	left	Ate		2530701	[o] 25307 17.2	⊖ M-technology	
			Ate		82517800		⊖ M-technology			98047600	L1045		
				PRO	92176103	ø 312 x 24 x 73.5	⊖ M-technology			TPM0003			
					TPM0003					91053300	ø 160.5 x 20		
										97012600			
		52600			98047500	L675	left	Ate		2502902	[o] 25029 17	⊕ M-technology ⊕ perform. brk. sys.	
M 135 i	11/11→	235 / 320			TPM0003					98047600	L1045		
M 135 i xDrive	02/12→	235 / 320								TPM0003			
										91053300	ø 160.5 x 20		
										97012600			
1 (F21) 12/11→													
		52700	Ate		2501401	[o] 25014	⊖ M-technology ⊖ perform. brk. sys.	Ate		2502902	[o] 25029 17	⊕ perform. brk. sys.	
114 d	07/12→	70 / 95			98047500	L675	left	Ate		2530701	[o] 25307 17.2	⊖ perform. brk. sys.	
114 i	12/11→	75 / 102	Ate		82062900					98047600	L1045		
116 d	12/11→	85 / 116		PRO	92238403	ø 284 x 22 x 73.3	⊖ M-technology ⊖ perform. brk. sys.	Ate		82062900			
116 d	01/12→	85 / 116			TPM0003				PRO	92261003	ø 290 x 11 x 66.3	⊖ M-technology ⊖ perform. brk. sys.	
116 i	12/11→	100 / 136								TPM0003			

→

kW / hp

1 (F21) 12/11→

52700													
114 d	07/12→	70 / 95								91053300	ø 160.5 x 20		
114 i	12/11→	75 / 102								97012600			
116 d	12/11→	85 / 116											
116 d	01/12→	85 / 116											
116 i	12/11→	100 / 136											
52800			Ate		2501401	[o] 25014	⊖ M-technology ⊖ perform. brk. sys.	Ate		2502902	[o] 25029 17	Ø 345 mm ⊕ perform. brk. sys.	
118 d	12/11→	100 / 136			98047500	L675	left	Ate		2530701	[o] 25307 17.2	⊖ perform. brk. sys.	
118 d	12/11→	105 / 143	Ate		82062900					98047600	L1045		
				PRO	92238403	ø 284 x 22 x 73.3	⊖ M-technology ⊖ perform. brk. sys.	Ate		82062900			
					TPM0003				PRO	92261003	ø 290 x 11 x 66.3	⊖ M-technology ⊖ perform. brk. sys.	
										TPM0003			
										91053300	ø 160.5 x 20		
										97012600			
52900			Ate		2550601	[o] 25506 18.2	⊖ M-technology ⊖ perform. brk. sys.	Ate		2502902	[o] 25029 17	⊕ M-technology	
118 d xDrive	05/13→	105 / 143			98047500	L675	left	Ate		2530701	[o] 25307 17.2	⊖ M-technology	
				PRO	92238503	ø 300 x 22 x 73.2	⊖ M-technology ⊖ perform. brk. sys.			98047600	L1045		
					TPM0003				PRO	92261003	ø 290 x 11 x 66.3	⊖ M-technology ⊖ perform. brk. sys.	
										TPM0003			
										91053300	ø 160.5 x 20		
										97012600			
53000			Ate		2550601	[o] 25506 18.2	⊖ M-technology ⊖ perform. brk. sys.	Ate		2502902	[o] 25029 17	⊕ M-technology	
118 i	07/12→	125 / 170			98047500	L675	left	Ate		2530701	[o] 25307 17.2	⊖ M-technology	
120 d xDrive	02/12→	135 / 184	Ate		82062900					98047600	L1045		
				PRO	92238503	ø 300 x 22 x 73.2	⊖ M-technology ⊖ perform. brk. sys.	Ate		82062900			
					TPM0003					TPM0003			
										91053300	ø 160.5 x 20		
										97012600			
53100			Ate		2550601	[o] 25506 18.2	⊖ M-technology	Ate		2502902	[o] 25029 17	⊕ M-technology	
120 d	01/12→	147 / 200			98047500	L675	left	Ate		2530701	[o] 25307 17.2	⊖ M-technology	
120 d xDrive	01/12→	147 / 200		PRO	92238503	ø 300 x 22 x 73.2	⊖ M-technology ⊖ perform. brk. sys.			98047600	L1045		
					TPM0003					TPM0003			
										91053300	ø 160.5 x 20		
										97012600			
53200			Ate		2550601	[o] 25506 18.2	⊖ M-technology ⊖ perform. brk. sys.	Ate		2502902	[o] 25029 17	Ø 345 mm ⊕ M-technology	
120 d	07/12→	120 / 163			98047500	L675	left	Ate		2530701	[o] 25307 17.2	⊖ M-technology	
120 d	07/12→	135 / 184	Ate		82062900					98047600	L1045		
				PRO	92238503	ø 300 x 22 x 73.2	⊖ M-technology ⊖ perform. brk. sys.	Ate		82062900			
					TPM0003					TPM0003			
										91053300	ø 160.5 x 20		
										97012600			
53300			Bos		2519901	[o] 25199 19.2	⊖ M-technology	Ate		2502902	[o] 25029 17	⊕ M-technology	
125 d	12/11→	155 / 211			98047500	L675	left	Ate		2530701	[o] 25307 17.2	⊖ M-technology	
125 d	12/11→	160 / 218											
125 i	12/11→	160 / 218											

BMW

BMW

		kW / hp										
1 (F21) 12/11→												
		53300	Ate		**82517800**		⊖ M-technology ⊖ perform. brk. sys.			**98047600**	L1045	
125 d	12/11→	155 / 211		PRO	**92176103**	ø 312 x 24 x 73.5	⊖ M-technology ⊖ perform. brk. sys.	Ate		**82062900**		
125 d	12/11→	160 / 218			**TPM0003**					**TPM0003**		
125 i	12/11→	160 / 218								**91053300**	ø 160.5 x 20	
										97012600		
		53400	Bos		**2519901**	[o] 25199 19.2	⊖ M-technology	Ate		**2502902**	[o] 25029 17	⊕ M-technology
125 i	03/13→	175 / 238			**98047500**	L675	left	Ate		**2530701**	[o] 25307 17.2	⊖ M-technology
125 i Flex	08/14→	160 / 218	Ate		**82517800**		⊖ M-technology			**98047600**	L1045	
				PRO	**92176103**	ø 312 x 24 x 73.5	⊖ M-technology ⊖ perform. brk. sys.			**TPM0003**		
					TPM0003					**91053300**	ø 160.5 x 20	
										97012600		
		53500			**98047500**	L675	left	Ate		**2502902**	[o] 25029 17	⊕ M-technology ⊕ perform. brk. sys.
M 135 i	12/11→	235 / 320			**TPM0003**					**98047600**	L1045	
M 135 i xDrive	02/12→	235 / 320								**TPM0003**		
										91053300	ø 160.5 x 20	
										97012600		
1 Cabriolet (E88) 09/07→ → 1 Convertible (E88), Page 90												
1 Convertible (E88) 09/07→												
		53600	Luc		**2391503**	[o] 23915 17.8	⊖ M-technology	Ate		**2392701**	[o] 23927 17.3	
118 d	09/08→	100 / 136	Bre		**2431601**	[o] 24316 17	⊕ M-technology	Ate	epad	**2392781**	[o] 23927 17.3	
118 d	09/08→	105 / 143			**98031200**	L635	⊖ M-technology →03/10			**98031300**	L1093	⊖ M-technology →03/10 ⊕ M-technology
118 i	03/08→	105 / 143			**98043700**	L650	⊖ M-technology 03/10→			**98043900**	L1110	03/10→ ⊖ M-technology
					98046000	L695	⊕ M-technology	Ate		**82028700**		
			Luc		**82072200**		⊕ M-technology	Ate		**82062900**		
			Bre		**82504600**		⊕ M-technology		PRO	**92133003**	ø 300 x 20 x 66.1	⊕ M-technology
				PRO	**92132803**	ø 292 x 22 x 73	⊖ M-technology			**TPM0003**		
				PRO	**92132805**	ø 292 x 22 x 73	⊖ M-technology			**91053300**	ø 160.5 x 20	
					TPM0003							
		53700	Luc		**2391503**	[o] 23915 17.8	⊖ M-technology	Ate		**2392701**	[o] 23927 17.3	
118 i	09/08→	100 / 136	Bre		**2431601**	[o] 24316 17	⊕ M-technology	Ate	epad	**2392781**	[o] 23927 17.3	
					98031200	L635	⊖ M-technology →03/10			**98031300**	L1093	⊖ M-technology →03/10 ⊕ M-technology
					98043700	L650	⊖ M-technology 03/10→			**98043900**	L1110	03/10→ ⊖ M-technology
					98046000	L695	⊕ M-technology	Ate		**82028700**		
			Bre		**82504600**		⊕ M-technology	Ate		**82062900**		
				PRO	**92132803**	ø 292 x 22 x 73	⊖ M-technology			**TPM0003**		
				PRO	**92132805**	ø 292 x 22 x 73	⊖ M-technology			**91053300**	ø 160.5 x 20	
					TPM0003					**97012600**		
		53800	Ate		**2409601**	[o] 24096 20.3	⊖ M-technology	Ate		**2392701**	[o] 23927 17.3	
120 d	03/08→	120 / 163										
120 d	03/08→	130 / 177	Ate	epad	**2409681**	[o] 24096 20.3	⊖ M-technology	Ate	epad	**2392781**	[o] 23927 17.3	
120 d	03/08→	145 / 197										
120 i	03/08→	115 / 156										
120 i	03/08→	120 / 163	Bre		**2431601**	[o] 24316 17	⊕ M-technology			**98031300**	L1093	⊖ M-technology →03/10 ⊕ M-technology
120 i	03/08→	125 / 170										

→

		kW / hp												
1 Convertible (E88) 09/07→														
		53800												
120 d	03/08→	120 / 163												
120 d	03/08→	130 / 177												
120 d	03/08→	145 / 197												
120 i	03/08→	115 / 156												
120 i	03/08→	120 / 163												
120 i	03/08→	125 / 170												
					98031200	L635	⊖ M-technology →03/10				98043900	L1110	03/10→ ⊖ M-technology	
					98043700	L650	⊖ M-technology 03/10→			Ate	82028700			
					98046000	L695	⊕ M-technology			Ate	82062900			
			Luc		82072200		⊕ M-technology			PRO	92133003	ø 300 x 20 x 66.1	⊕ M-technology	
			Bre		82504600		⊕ M-technology				TPM0003			
			Ate		82062900		⊖ M-technology				91053300	ø 160.5 x 20		
			Ate		82074500		⊖ M-technology				97012600			
				PRO	92137703	ø 300 x 24 x 73.5	⊖ M-technology							
					TPM0003									
		53900												
123 d	09/08→	150 / 204	Ate		2409601	[o] 24096 20.3	⊖ M-technology			Ate	2392701	[o] 23927 17.3	⊖ M-technology	
			Ate	epad	2409681	[o] 24096 20.3	⊖ M-technology			Ate epad	2392781	[o] 23927 17.3	⊖ M-technology	
			Bre		2431601	[o] 24316 17	⊕ M-technology			Bre	2431501	[o] 24315 16.9	⊕ M-technology	
					98043800	L723	⊖ M-technology 03/10→				98031300	L1093	⊖ M-technology →03/10 ⊕ M-technology	
					98046000	L695	⊖ M-technology →03/10 ⊕ M-technology				98043900	L1110	03/10→ ⊖ M-technology	
			Luc		82072200		⊕ M-technology			Ate	82028700		⊖ M-technology	
			Bre		82504600		⊕ M-technology			Ate	82062900		⊖ M-technology	
			Ate		82062900		⊖ M-technology			PRO	92133003	ø 300 x 20 x 66.1	⊕ M-technology	
			Ate		82074500		⊖ M-technology			PRO	92227103	ø 300 x 20 x 76	⊖ M-technology	
					TPM0003						TPM0003			
											91049300	ø 185 x 20		
		54000												
125 i	03/08→	160 / 218	Ate		2409601	[o] 24096 20.3	⊖ M-technology			Ate	2392701	[o] 23927 17.3		
			Ate	epad	2409681	[o] 24096 20.3	⊖ M-technology			Ate epad	2392781	[o] 23927 17.3		
			Bre		2431601	[o] 24316 17	⊕ M-technology				98031300	L1093	⊖ M-technology →03/10 ⊕ M-technology	
					98031200	L635	⊖ M-technology →03/10				98043900	L1110	03/10→ ⊖ M-technology	
					98043700	L650	⊖ M-technology 03/10→			Ate	82028700			
					98046000	L695	⊕ M-technology			Ate	82062900			
			Luc		82072200		⊕ M-technology			PRO	92133003	ø 300 x 20 x 66.1	⊕ M-technology	
			Bre		82504600		⊕ M-technology				TPM0003			
			Ate		82062900		⊖ M-technology				91053300	ø 160.5 x 20		
			Ate		82074500		⊖ M-technology							
				PRO	92137703	ø 300 x 24 x 73.5	⊖ M-technology							
					TPM0003									
		54100												
128 i	09/07→	171 / 233	Ate		2409601	[o] 24096 20.3	→2010-10 ⊖ M-technology			Ate	2392701	[o] 23927 17.3		
			Ate	epad	2409681	[o] 24096 20.3	→2010-10 ⊖ M-technology			Ate epad	2392781	[o] 23927 17.3		
			Bre		2431601	[o] 24316 17	⊕ M-technology				98031300	L1093		
					98031200	L635	→2010-03 ⊖ M-technology				98043900	L1110	⊖ perform. brk. sys. ⊖ M-technology	
					98043700	L650	2010-03→ ⊖ M-technology			Ate	82028700			
					98046000	L695	⊕ perform. brk. sys. ⊕ M-technology				TPM0003			
			Bre		82504600		⊕ M-technology				91053300	ø 160.5 x 20		
			Ate		82074500		⊖ M-technology				97012600			

BMW

BMW

		kW / hp										
1 Convertible (E88) 09/07→												
54100												
128 i	09/07→	171 / 233		PRO	92137703	ø 300 x 24 x 73.5	⊖ perform. brk. sys. ⊖ M-technology					
					TPM0003							
54200			Bre		2431601	[o] 24316 17		Bre		2431501	[o] 24315 16.9	
135 i	03/08→	225 / 306			98046000	L695	⊕ M-technology			98031300	L1093	⊖ M-technology →03/10 ⊕ M-technology
135 i	03/08→	240 / 326			98046900	L700	⊖ M-technology			98043900	L1110	03/10→ ⊖ M-technology
			Bre		82504600			Bre		82504500		
					TPM0003					TPM0003		
										91049300	ø 185 x 20	
										97003100		
1 Coupe (E82) 10/07→06/12												
54300			Luc		2391503	[o] 23915 17.8	⊖ M-technology	Ate		2392701	[o] 23927 17.3	
118 d	09/09→	100 / 136										
118 d	09/09→	105 / 143	Bre		2431601	[o] 24316 17	⊕ M-technology	Ate	epad	2392781	[o] 23927 17.3	
					98031200	L635	⊖ M-technology →03/10			98031300	L1093	⊖ M-technology →03/10 ⊕ M-technology
					98043700	L650	⊖ M-technology 03/10→			98043900	L1110	⊖ M-technology 03/10→
					98046000	L695	⊕ M-technology	Ate		82028700		
			Bre		82504600		⊕ M-technology	Ate		82062900		
				PRO	92132803	ø 292 x 22 x 73	⊖ M-technology			TPM0003		
				PRO	92132805	ø 292 x 22 x 73	⊖ M-technology			91053300	ø 160.5 x 20	
					TPM0003					97012600		
54400			Ate		2409601	[o] 24096 20.3	⊖ M-technology	Ate		2392701	[o] 23927 17.3	
120 d	10/07→	120 / 163										
120 d	10/07→	130 / 177	Ate	epad	2409681	[o] 24096 20.3	⊖ M-technology	Ate	epad	2392781	[o] 23927 17.3	
120 i	09/09→	115 / 156										
120 i	09/09→	125 / 170										
125 i	10/07→	160 / 218	Bre		2431601	[o] 24316 17	⊕ M-technology			98031300	L1093	⊖ M-technology →03/10 ⊕ M-technology
					98031200	L635	⊖ M-technology →03/10			98043900	L1110	⊖ M-technology 03/10→
					98043700	L650	⊖ M-technology 03/10→	Ate		82028700		
					98046000	L695	⊕ M-technology	Ate		82062900		
			Bre		82504600		⊕ M-technology			TPM0003		
			Ate		82062900		⊖ M-technology			91053300	ø 160.5 x 20	
			Ate		82074500		⊖ M-technology			97012600		
				PRO	92137703	ø 300 x 24 x 73.5	⊖ M-technology					
					TPM0003							
54500			Ate		2409601	[o] 24096 20.3	⊖ M-technology	Ate		2392701	[o] 23927 17.3	⊖ M-technology
123 d	10/07→	150 / 204										
			Ate	epad	2409681	[o] 24096 20.3	⊖ M-technology	Ate	epad	2392781	[o] 23927 17.3	⊖ M-technology
			Bre		2431601	[o] 24316 17	⊕ M-technology	Bre		2431501	[o] 24315 16.9	⊕ M-technology
					98043800	L723	⊖ M-technology 03/10→			98031300	L1093	⊖ M-technology →03/10 ⊕ M-technology
					98046000	L695	⊖ M-technology →03/10 ⊕ M-technology			98043900	L1110	⊖ M-technology 03/10→
			Bre		82504600		⊕ M-technology	Bre		82504500		⊕ M-technology
			Ate		82062900		⊖ M-technology	Ate		82028700		⊖ M-technology
			Ate		82074500		⊖ M-technology	Ate		82062900		⊖ M-technology
				PRO	92137803	ø 330 x 24 x 73	⊖ M-technology		PRO	92227103	ø 300 x 20 x 76	→07/12 ⊖ M-technology ⊕ M-technology
					TPM0003					TPM0003		

→

		kW / hp											
1 Coupe (E82) 10/07→06/12													
		54500											
123 d	10/07→	150 / 204											
										91049300	ø 185 x 20		
		54600	Ate		**2409601**	[o] 24096	20.3	⊖ M-technology	Ate	**2392701**	[o] 23927	17.3	⊕ M-technology
128 i	10/07→	171 / 233	Ate	epad	**2409681**	[o] 24096	20.3	⊖ M-technology	Ate	**2392781**	[o] 23927	17.3	⊕ M-technology
			Bre		**2431601**	[o] 24316	17	⊕ M-technology		**98031300**	L1093		⊕ M-technology
					98043700	L650		⊖ M-technology		**98043900**	L1110		⊖ M-technology
					98046000	L695		⊕ M-technology	Ate	**82028700**			
			Bre		**82504600**			⊖ M-technology	Ate	**82062900**			⊕ M-technology
			Ate		**82062900**			⊖ M-technology		**TPM0003**			
			Ate		**82074500**			⊖ M-technology					
				PRO	**92137703**	ø 300 x 24 x 73.5		⊖ M-technology					
					TPM0003								
		54700	Bre		**2431601**	[o] 24316	17		Bre	**2431501**	[o] 24315	16.9	
135 i	10/07→	225 / 306			**98043800**	L723		⊖ M-technology		**98031300**	L1093		⊕ M-technology
					98046000	L695		⊕ M-technology		**98043900**	L1110		⊖ M-technology
			Bre		**82504600**				Bre	**82504500**			
					TPM0003					**TPM0003**			
										91049300	ø 185 x 20		
										97003100			
		54800	Ate		**2331207**	[o] 23312	20.3		Ate	**2373007**	[o] 23730	17.1	
M	04/11→06/12	250 / 340	Ate	epad	**2331281**	[o] 23312	20.3			**98031300**	L1093		
					98041400	L675			Ate	**82057500**			
			Ate		**82062900**				Ate	**82062900**			
			Ate		**82072000**					**TPM0003**			
					TPM0009					**91049300**	ø 185 x 20		
										97003100			
2 Active Tourer (F45) 09/14→													
		54900			**TPM0003**					**TPM0003**			
216 d	11/14→	85 / 116											
218 d	09/14→	110 / 150											
218 d	09/14→	110 / 150											
218 i	09/14→	100 / 136											
220 d	11/14→	140 / 190											
225 i	09/14→	170 / 231											
2 Coupe (F22) 10/13→													
		55000	Ate		**2501401**	[o] 25014		⊖ M-technology ⊖ KP ⊖ KR	Ate	**2502902**	[o] 25029	17	⊕ M-technology
218 d	01/14→	105 / 143	Bos		**2519901**	[o] 25199	19.2	⊖ M-technology ⊕ KP ⊕ KR	Ate	**2530701**	[o] 25307	17.2	⊖ M-technology ⊖ reinf.brake
					98047500	L675		left		**98047600**	L1045		
			Ate		**82517800**			⊖ M-technology ⊕ KP ⊕ KR		**92261003**	ø 290 x 11 x 66.3		⊖ M-technology ⊖ perform. brk. sys. ⊖ KP ⊖ KR
				PRO	**92176103**	ø 312 x 24 x 73.5		⊖ M-technology ⊕ perform. brk. sys.		**TPM0003**			
				PRO	**92238403**	ø 284 x 22 x 73.3		⊖ M-technology ⊖ perform. brk. sys.		**91053300**	ø 160.5 x 20		
					TPM0003					**97012600**			
		55100	Bos		**2519901**	[o] 25199	19.2	⊖ M-technology	Ate	**2502902**	[o] 25029	17	⊕ M-technology
220 d	10/13→	135 / 184											
220 d	03/14→	147 / 200			**98047500**	L675		left	Ate	**2530701**	[o] 25307	17.2	⊖ M-technology
220 i	10/13→	135 / 184											
225 d	01/14→	160 / 218	Ate		**82517800**			⊖ M-technology		**98047600**	L1045		
				PRO	**92176103**	ø 312 x 24 x 73.5		⊖ M-technology ⊖ perform. brk. sys.		**TPM0003**			

BMW

BMW

		kW / hp											
2 Coupe (F22) 10/13→													
		55100		TPM0003					91053300	ø 160.5 x 20	
220 d	10/13→	135 / 184							97012600		
220 d	03/14→	147 / 200									
220 i	10/13→	135 / 184									
225 d	01/14→	160 / 218									
		55200	Bos	2519901	[o] 25199 19.2	⊖ M-technology	Ate	2502902	[o] 25029 17	⊕ M-technology
228 i	07/14→	180 / 245		98047500	L675	left	Ate	2530701	[o] 25307 17.2	⊖ M-technology
			Ate	82517800		⊖ M-technology		98047600	L1045	
				92242003	ø 330 x 24 x 73.2	⊖ M-technology		TPM0003		
				TPM0003				91053300	ø 160.5 x 20	
								97012600		
		55300	Bos	2519901	[o] 25199 19.2	⊖ M-technology	Ate	2502902	[o] 25029 17	⊕ M-technology
228 i xDrive	07/14→	180 / 245		98047500	L675	left		98047600	L1045	
			Ate	82517800		⊖ M-technology		TPM0003		
				92176103	ø 312 x 24 x 73.5	⊖ M-technology ⊖ perform. brk. sys.		91053300	ø 160.5 x 20	
				TPM0003				97012600		
		55400		98047500	L675	left	Ate	2502902	[o] 25029 17	
M 235 i	10/13→	240 / 326		TPM0003				98047600	L1045	
M 235 i xDrive	07/14→	240 / 326						TPM0003		
								91053300	ø 160.5 x 20	
								97012600		
3 (E46) 02/98→04/05													
		55500	Ate	2328702	[o] 23287 17.8		Ate	2193402	[o] 21934 17.3	
316 i	09/98→02/05	77 / 105									
316 i	02/02→02/05	85 / 115	Ate	2328781	[o] 23287 17.8		Ate	2193481	[o] 21934 17.3	
318 i	02/98→09/01	87 / 118		epad				epad		
				98023900	L596			98024000	L1338	
			Ate	82039300			Ate	82028700		
			Ate	82062900			Ate	82062900		
				92055603	ø 286 x 22 x 51.7			92055703	ø 280 x 10 x 60.1	⊖ incr. payload
				92055605	ø 286 x 22 x 51.7			92072403	ø 276 x 19 x 60.1	⊕ incr. payload
				TPM0003				TPM0003		
								91053300	ø 160.5 x 20	
								97012600		
		55600	Ate	2328702	[o] 23287 17.8		Ate	2193402	[o] 21934 17.3	
316 i	04/00→02/05	77 / 105								
316 i	06/02→02/05	85 / 115	Ate	2328781	[o] 23287 17.8		Ate	2193481	[o] 21934 17.3	
				epad				epad		
				98023900	L596			98024000	L1338	
			Ate	82039300			Ate	82028700		
			Ate	82062900			Ate	82062900		
				92055603	ø 286 x 22 x 51.7			92055703	ø 280 x 10 x 60.1	
				92055605	ø 286 x 22 x 51.7			TPM0003		
				TPM0003				91053300	ø 160.5 x 20	
								97012600		
		55700	Ate	2328702	[o] 23287 17.8		Ate	2193402	[o] 21934 17.3	
318 d	09/01→03/03	85 / 116								
318 d	03/03→02/05	85 / 116	Ate	2328781	[o] 23287 17.8		Ate	2193481	[o] 21934 17.3	
320 d	02/98→04/05	95 / 129		epad				epad		
320 d	04/98→09/01	100 / 136								
320 i	03/98→09/00	110 / 150								

→

3 (E46) 02/98→04/05

320 i	09/00→02/05	125 / 170			98023900	L596			98024000	L1338	
			Ate		82039300			Ate	82028700		
			Ate		82062900			Ate	82062900		
				PRO	92055603	ø 286 x 22 x 51.7			92072403	ø 276 x 19 x 60.1	
				PRO	92055605	ø 286 x 22 x 51.7			TPM0003		
					TPM0003				91053300	ø 160.5 x 20	
									97012600		
318 i	09/01→02/05	55800 105 / 143	Ate		2328702	[o] 23287 17.8		Ate	2193402	[o] 21934 17.3	
			Ate	epad	2328781	[o] 23287 17.8		Ate	2193481	[o] 21934 17.3	
					98023900	L596			98024000	L1338	
			Ate		82039300			Ate	82028700		
			Ate		82062900			Ate	82062900		
				PRO	92055603	ø 286 x 22 x 51.7			92072403	ø 276 x 19 x 60.1	⊖ incr. payload
				PRO	92055605	ø 286 x 22 x 51.7			92097303	ø 294 x 19 x 59.2	⊕ incr. payload
					TPM0003				TPM0003		
									91053300	ø 160.5 x 20	
									97012600		
320 d 325 i 328 i	09/01→02/05 09/00→02/05 02/98→06/00	55900 110 / 150 141 / 192 142 / 193	Ate		2328702	[o] 23287 17.8		Ate	2193402	[o] 21934 17.3	
			Ate	epad	2328781	[o] 23287 17.8		Ate	2193481	[o] 21934 17.3	
					98023900	L596			98024000	L1338	
			Ate		82039300			Ate	82028700		
			Ate		82062900			Ate	82062900		
				PRO	92097203	ø 300 x 22 x 51.5			92097303	ø 294 x 19 x 59.2	
				PRO	92097205	ø 300 x 22 x 51.5			TPM0003		
					TPM0003				91053300	ø 160.5 x 20	
									97012600		
323 i	03/98→09/00	56000 125 / 170	Ate		2328702	[o] 23287 17.8		Ate	2193402	[o] 21934 17.3	
			Ate	epad	2328781	[o] 23287 17.8		Ate	2193481	[o] 21934 17.3	
					98023900	L596			98024000	L1338	
			Ate		82039300			Ate	82028700		
			Ate		82062900			Ate	82062900		
				PRO	92055603	ø 286 x 22 x 51.7	⊖ incr. payload		92072403	ø 276 x 19 x 60.1	⊖ incr. payload
				PRO	92055605	ø 286 x 22 x 51.7	⊖ incr. payload		92097303	ø 294 x 19 x 59.2	⊕ incr. payload
				PRO	92097203	ø 300 x 22 x 51.5	⊕ incr. payload		TPM0003		
				PRO	92097205	ø 300 x 22 x 51.5	⊕ incr. payload		91053300	ø 160.5 x 20	
					TPM0003				97012600		
325	09/00→04/05	56100 137 / 186	Ate		2328702	[o] 23287 17.8		Ate	2193402	[o] 21934 17.3	
			Ate	epad	2328781	[o] 23287 17.8		Ate	2193481	[o] 21934 17.3	
					98023900	L596			98024000	L1338	
			Ate		82039300			Ate	82028700		

BMW

BMW

30 kW / hp

3 (E46) 02/98→04/05

56100													
325	09/00→04/05	137 / 186		PRO	92097203	ø 300 x 22 x 51.5				PRO	92097303	ø 294 x 19 x 59.2	
				PRO	92097205	ø 300 x 22 x 51.5					TPM0003		
					TPM0003								
56200			Ate		2328702	[o] 23287 17.8			Ate		2193402	[o] 21934 17.3	
325 xi	09/00→02/05	141 / 192	Ate	epad	2328781	[o] 23287 17.8			Ate	epad	2193481	[o] 21934 17.3	
					98023900	L596					98024000	L1338	
			Ate		82039300				Ate		82028700		
					92106900	ø 325 x 25 x 52.5	⊕ incr. payload			PRO	92141703	ø 294 x 19 x 60.5	
				PRO	92097203	ø 300 x 22 x 51.5	⊖ incr. payload				TPM0003		
				PRO	92097205	ø 300 x 22 x 51.5	⊖ incr. payload				91049300	ø 185 x 20	
				PRO	92106903	ø 325 x 25 x 52.5	⊕ incr. payload				97003100		
				PRO	92106905	ø 325 x 25 x 52.5	⊕ incr. payload						
					TPM0003								
56300			Ate		2328702	[o] 23287 17.8			Ate		2193402	[o] 21934 17.3	
325 xi	09/00→04/05	137 / 186	Ate	epad	2328781	[o] 23287 17.8			Ate	epad	2193481	[o] 21934 17.3	
					98026900	L650					98024000	L1338	
			Ate		82039300				Ate		82028700		
				PRO	92097203	ø 300 x 22 x 51.5				PRO	92141703	ø 294 x 19 x 60.5	
				PRO	92097205	ø 300 x 22 x 51.5					TPM0003		
					TPM0003						91049300	ø 185 x 20	
											97003100		
56400			Ate		2318302	[o] 23183 20.3			Ate		2148703	[o] 21487 17.2	
330 d	10/99→02/05	135 / 184											
330 d	03/03→02/05	150 / 204	Ate	epad	2318381	[o] 23183 20.3					98024000	L1338	
330 i	06/00→02/05	170 / 231											
330 i	01/01→04/05	168 / 228			98026900	L650			Ate		82062900		
330 xd	06/00→02/05	135 / 184											
330 xd	03/03→02/05	150 / 204	Ate		82028600					PRO	92107003	ø 320 x 22 x 60.5	
			Ate		82062900						TPM0003		
					92106900	ø 325 x 25 x 52.5					91049300	ø 185 x 20	
				PRO	92106903	ø 325 x 25 x 52.5					97003100		
				PRO	92106905	ø 325 x 25 x 52.5							
					TPM0003								
56500			Ate		2318302	[o] 23183 20.3			Ate		2148703	[o] 21487 17.2	
330 xi	06/00→02/05	170 / 231	Ate	epad	2318381	[o] 23183 20.3					98024000	L1338	
					98026900	L650			Ate		82062900		
			Ate		82028600					PRO	92107003	ø 320 x 22 x 60.5	
					92106900	ø 325 x 25 x 52.5					TPM0003		
				PRO	92106903	ø 325 x 25 x 52.5					91049300	ø 185 x 20	
				PRO	92106905	ø 325 x 25 x 52.5					97003100		
					TPM0003								
56600			Ate		2318302	[o] 23183 20.3			Ate		2148701	[o] 21487 17.2	
330 xi	09/04→04/05	168 / 228	Ate	epad	2318381	[o] 23183 20.3			Ate		2148703	[o] 21487 17.2	

→

30 kW / hp											
3 (E46) 02/98→04/05											
330 xi	09/04→04/05	56600 168 / 228		98026900	L650		Ate	2148781	[o] 21487 17.2	
			Ate	82028600				98024000	L1338	
				92106900	ø 325 x 25 x 52.5		Ate	82057500		
				92106903	ø 325 x 25 x 52.5			92107003	ø 320 x 22 x 60.5	
				92106905	ø 325 x 25 x 52.5			TPM0003		vented disc
				TPM0003		vented disc		91049300	ø 185 x 20	
								97003100		
3 (E90) 01/05→12/11											
316 d	07/09→12/11	56700 85 / 116	Ate	2409601	[o] 24096 20.3	⊖ M-technology	Luc	2362303	[o] 23623 17.4	
			Ate	2409681	[o] 24096 20.3	⊖ M-technology	Luc	2362381	[o] 23623 17.4	
				98031200	L635	→03/10	Ate	2392701	[o] 23927 17.3	⊕ M-technology
				98043700	L650	03/10→	Ate	2392781	[o] 23927 17.3	⊕ M-technology
			Ate	82062900		⊖ M-technology		98031300	L1093	→03/10
			Ate	82074500		⊖ M-technology		98043900	L1110	03/10→
				92137703	ø 300 x 24 x 73.5		Luc	82060100		
				TPM0003			Ate	82028700		⊕ M-technology
							Ate	82062900		⊕ M-technology
								92133103	ø 296 x 10.5 x 65.1	
								TPM0003		
								91053300	ø 160.5 x 20	
								97012600		
316 i	02/06→12/11	56800 85 / 116	Ate	2393501	[o] 23935 17.8	⊖ M-technology	Luc	2362303	[o] 23623 17.4	⊖ M-technology
			Ate	2393581	[o] 23935 17.8	⊖ M-technology	Luc	2362381	[o] 23623 17.4	⊖ M-technology
			Bre	2431601	[o] 24316 17	⊕ M-technology	Ate	2392701	[o] 23927 17.3	⊕ M-technology
				98031200	L635	⊖ M-technology →03/10	Ate	2392781	[o] 23927 17.3	⊕ M-technology
				98043800	L723	⊖ M-technology 03/10→		98031300	L1093	→03/10
				98046000	L695	⊕ M-technology		98043900	L1110	03/10→
			Bre	82504600		⊕ M-technology	Luc	82060100		⊖ M-technology
			Ate	82039300		⊖ M-technology	Ate	82028700		⊕ M-technology
			Ate	82062900		⊖ M-technology	Ate	82062900		⊕ M-technology
				92132803	ø 292 x 22 x 73	⊖ M-technology		92133103	ø 296 x 10.5 x 65.1	⊖ M-technology
				92132805	ø 292 x 22 x 73	⊖ M-technology		92133003	ø 300 x 20 x 66.1	⊕ M-technology
				TPM0003				TPM0003		
								91053300	ø 160.5 x 20	
								97012600		
316 i	09/07→12/11	56900 90 / 122	Ate	2409601	[o] 24096 20.3	⊖ M-technology	Luc	2362303	[o] 23623 17.4	⊖ M-technology
			Ate	2409681	[o] 24096 20.3	⊖ M-technology	Luc	2362381	[o] 23623 17.4	⊖ M-technology
			Bre	2431601	[o] 24316 17	⊕ M-technology	Ate	2392701	[o] 23927 17.3	⊕ M-technology
				98031200	L635	⊖ M-technology →03/10	Ate	2392781	[o] 23927 17.3	⊕ M-technology
				98043800	L723	⊖ M-technology 03/10→		98031300	L1093	→03/10

BMW

BMW

30 kW / hp

3 (E90) 01/05→12/11

56900													
316 i	09/07→12/11	90 / 122			98046000	L695	⊕ M-technology			98043900	L1110	03/10→
			Bre		82504600		⊕ M-technology	Luc		82060100		⊖ M-technology
			Ate		82062900		⊖ M-technology	Ate		82028700		⊕ M-technology
			Ate		82074500		⊖ M-technology	Ate		82062900		⊕ M-technology
				PRO	92137703	ø 300 x 24 x 73.5	⊖ M-technology		PRO	92133103	ø 296 x 10.5 x 65.1	⊖ M-technology
					TPM0003				PRO	92133003	ø 300 x 20 x 66.1	⊕ M-technology
										TPM0003		
										91053300	ø 160.5 x 20	
										97012600		
57000													
318 d	09/05→12/11	90 / 122	Ate		2379401	[o] 23794 20.3	⊕ incr. payload ⊖ M-technology	Luc		2362303	[o] 23623 17.4	⊖ incr. payload ⊖ M-technology
			Ate	epad	2379481	[o] 23794 20.3	⊕ incr. payload ⊖ M-technology	Luc	epad	2362381	[o] 23623 17.4	⊖ incr. payload ⊖ M-technology
			Ate		2393501	[o] 23935 17.8	⊖ incr. payload ⊖ M-technology	Ate		2392701	[o] 23927 17.3	⊕ incr. payload ⊕ M-technology
			Ate	epad	2393581	[o] 23935 17.8	⊖ incr. payload ⊖ M-technology	Ate	epad	2392781	[o] 23927 17.3	⊕ incr. payload ⊕ M-technology
			Bre		2431601	[o] 24316 17	⊖ incr. payload ⊕ M-technology			98031300	L1093	→03/10
					98031200	L635	⊖ M-technology ⊖ incr. payload →03/10			98043900	L1110	03/10→
					98043700	L650	⊖ M-technology ⊖ incr. payload 03/10→	Luc		82060100		⊖ incr. payload ⊖ M-technology
					98043800	L723	⊖ M-technology ⊕ incr. payload 03/10→	Ate		82028700		⊕ incr. payload ⊕ M-technology
					98046000	L695	⊕ M-technology ⊕ incr. payload →03/10	Ate		82062900		⊕ incr. payload ⊖ M-technology
			Bre		82504600		⊕ M-technology ⊖ incr. payload	Luc		82063300		
			Ate		82039300		⊖ incr. payload		PRO	92133103	ø 296 x 10.5 x 65.1	⊖ incr. payload ⊖ M-technology
			Ate		82062900		⊖ M-technology		PRO	92133003	ø 300 x 20 x 66.1	⊕ incr. payload ⊕ M-technology
			Ate		82074500		⊕ incr. payload			TPM0003		
				PRO	92132803	ø 292 x 22 x 73	⊖ incr. payload ⊖ M-technology			91053300	ø 160.5 x 20	
				PRO	92132805	ø 292 x 22 x 73	⊖ incr. payload ⊖ M-technology			97012600		
				PRO	92137703	ø 300 x 24 x 73.5	⊕ incr. payload ⊖ M-technology					
					TPM0003							
57100													
318 d	09/05→12/11	105 / 143	Ate		2409601	[o] 24096 20.3	⊖ M-technology	Ate		2392701	[o] 23927 17.3	
			Ate	epad	2409681	[o] 24096 20.3	⊖ M-technology	Ate	epad	2392781	[o] 23927 17.3	
			Bre		2431601	[o] 24316 17	⊖ incr. payload ⊕ M-technology			98031300	L1093	→03/10
					98031200	L635	⊖ M-technology ⊖ incr. payload →03/10			98043900	L1110	03/10→
					98043700	L650	⊖ M-technology ⊖ incr. payload 03/10→	Luc		82060100		
					98043800	L723	⊖ M-technology ⊕ incr. payload 03/10→	Ate		82028700		
					98046000	L695	⊕ M-technology ⊕ incr. payload →03/10	Ate		82062900		
			Bre		82504600		⊕ M-technology		PRO	92133003	ø 300 x 20 x 66.1	
			Ate		82062900		⊖ M-technology			TPM0003		
			Ate		82074500		⊖ M-technology			91053300	ø 160.5 x 20	
				PRO	92132803	ø 292 x 22 x 73	⊖ incr. payload ⊖ M-technology			97012600		
				PRO	92132805	ø 292 x 22 x 73	⊖ incr. payload ⊖ M-technology					
				PRO	92137703	ø 300 x 24 x 73.5	⊕ incr. payload ⊖ M-technology					
					TPM0003							

→

kW / hp

3 (E90) 01/05→12/11

57200													
318 d	07/07→12/11	100 / 136	Ate		2409601	[o] 24096 20.3	⊖ M-technology	Ate		2392701	[o] 23927 17.3	
			Ate	epad	2409681	[o] 24096 20.3	⊖ M-technology	Ate	epad	2392781	[o] 23927 17.3	
			Bre		2431601	[o] 24316 17	⊕ M-technology			98031300	L1093	→03/10
					98031200	L635	⊖ M-technology →03/10			98043900	L1110	03/10→
					98043800	L723	03/10→	Ate		82028700		
					98046000	L695	⊕ M-technology	Ate		82062900		
			Bre		82504600		⊕ M-technology		PRO	92133003	ø 300 x 20 x 66.1	
			Ate		82039300		⊕ M-technology			TPM0003		
			Ate		82062900		⊖ M-technology			91053300	ø 160.5 x 20	
			Ate		82074500		⊖ M-technology			97012600		
				PRO	92137703	ø 300 x 24 x 73.5	⊖ M-technology					
					TPM0003							
57300													
318 i	09/05→03/07	95 / 129	Ate		2379401	[o] 23794 20.3	⊕ incr. payload ⊖ M-technology	Luc		2362303	[o] 23623 17.4	⊖ incr. payload ⊖ M-technology
			Ate	epad	2379481	[o] 23794 20.3	⊕ incr. payload ⊖ M-technology	Luc	epad	2362381	[o] 23623 17.4	⊖ incr. payload ⊖ M-technology
			Ate		2393501	[o] 23935 17.8	⊖ incr. payload ⊖ M-technology	Ate		2392701	[o] 23927 17.3	⊕ incr. payload ⊕ M-technology
			Ate	epad	2393581	[o] 23935 17.8	⊖ incr. payload ⊖ M-technology	Ate	epad	2392781	[o] 23927 17.3	⊕ incr. payload ⊕ M-technology
			Bre		2431601	[o] 24316 17	⊖ incr. payload ⊕ M-technology			98031300	L1093	
					98031200	L635	⊖ incr. payload ⊖ M-technology	Luc		82060100		⊖ incr. payload ⊖ M-technology
					98046000	L695	⊕ incr. payload ⊕ M-technology	Ate		82028700		⊕ incr. payload ⊕ M-technology
			Bre		82504600		⊕ M-technology ⊖ incr. payload	Ate		82062900		⊕ incr. payload ⊕ M-technology
			Ate		82039300		⊖ incr. payload	Luc		82063300		
			Ate		82062900		⊖ M-technology		PRO	92133103	ø 296 x 10.5 x 65.1	⊖ incr. payload ⊖ M-technology
			Ate		82074500		⊕ incr. payload		PRO	92133003	ø 300 x 20 x 66.1	⊕ incr. payload ⊕ M-technology
				PRO	92132803	ø 292 x 22 x 73	⊖ incr. payload ⊖ M-technology			TPM0003		
				PRO	92132805	ø 292 x 22 x 73	⊖ incr. payload ⊖ M-technology			91053300	ø 160.5 x 20	
				PRO	92137703	ø 300 x 24 x 73.5	⊕ incr. payload ⊖ M-technology			97012600		
					TPM0003							
57400													
318 i	06/07→12/11	100 / 136	Ate		2331301	[o] 23313 20.3	⊖ M-technology	Ate		2392701	[o] 23927 17.3	
			Ate	epad	2331381	[o] 23313 20.3	⊖ M-technology	Ate	epad	2392781	[o] 23927 17.3	
			Bre		2431601	[o] 24316 17	⊕ M-technology			98031300	L1093	→03/10
					98031200	L635	⊖ M-technology →03/10			98043900	L1110	03/10→
					98043800	L723	⊖ M-technology →03/10	Ate		82028700		
					98046000	L695	⊕ M-technology	Ate		82062900		
			Bre		82504600		⊕ M-technology		PRO	92133003	ø 300 x 20 x 66.1	
			Ate		82039300		⊖ M-technology			TPM0003		
			Ate		82062900		⊖ M-technology			91053300	ø 160.5 x 20	
				PRO	92137703	ø 300 x 24 x 73.5	⊖ M-technology			97012600		
					TPM0003							
57500													
318 i	09/07→12/11	105 / 143	Ate		2331301	[o] 23313 20.3	⊖ M-technology ⊖ governm. veh. ⊖ incr. payload	Ate		2392701	[o] 23927 17.3	
			Ate	epad	2331381	[o] 23313 20.3	⊖ M-technology ⊖ governm. veh. ⊖ incr. payload	Ate	epad	2392781	[o] 23927 17.3	

BMW

BMW

kW / hp

3 (E90) 01/05→12/11

57500														
318 i	09/07→12/11	105 / 143	Ate		2409601	[o] 24096 20.3	⊖ M-technology ⊕ governm. veh. ⊕ incr. payload				98031300	L1093	→03/10
			Ate	epad	2409681	[o] 24096 20.3	⊖ M-technology ⊕ governm. veh. ⊕ incr. payload				98043900	L1110	03/10→
			Bre		2431601	[o] 24316 17	⊕ M-technology ⊖ governm. veh. ⊖ incr. payload	Ate		82028700			
					98031200	L635	⊖ M-technology ⊖ governm. veh. ⊖ incr. payload →03/10	Ate		82062900			
					98043700	L650	03/10→ ⊖ M-technology ⊖ governm. veh. ⊖ incr. payload		PRO	92133003	ø 300 x 20 x 66.1	
					98043800	L723	⊖ M-technology 03/10→ ⊕ governm. veh. ⊕ incr. payload			TPM0003		
					98046000	L695	⊕ M-technology →03/10 ⊕ governm. veh. ⊕ incr. payload			91053300	ø 160.5 x 20	
			Bre		82504600		⊕ M-technology ⊖ governm. veh. ⊖ incr. payload			97012600		
			Ate		82039300		⊖ M-technology ⊖ governm. veh. ⊖ incr. payload					
			Ate		82062900		⊖ M-technology					
			Ate		82074500		⊖ M-technology ⊕ governm. veh. ⊕ incr. payload					
				PRO	92137703	ø 300 x 24 x 73.5	⊖ M-technology					
					TPM0003							
57600														
320 d	01/05→12/08	115 / 156	Ate		2379401	[o] 23794 20.3	⊖ M-technology	Ate		2355001	[o] 23550 17.3	⊖ M-technology ⊕ governm. veh.
			Ate	epad	2379481	[o] 23794 20.3	⊖ M-technology	Ate	epad	2355081	[o] 23550 17.3	⊖ M-technology ⊕ governm. veh.
			Bre		2431601	[o] 24316 17	⊕ M-technology	Ate		2392701	[o] 23927 17.3	
					98031200	L635	⊖ M-technology ⊖ governm. veh.	Ate	epad	2392781	[o] 23927 17.3	
					98046000	L695	⊖ M-technology ⊕ governm. veh. ⊕ M-technology			98031300	L1093	
			Bre		82504600		⊕ M-technology	Ate		82028700		
			Ate		82062900		⊖ M-technology	Ate		82057500		⊖ M-technology ⊕ governm. veh.
			Ate		82074500		⊖ M-technology	Ate		82062900		
				PRO	92137703	ø 300 x 24 x 73.5	⊖ M-technology ⊖ governm. veh.		PRO	92133003	ø 300 x 20 x 66.1	
				PRO	92137803	ø 330 x 24 x 73	⊖ M-technology ⊕ governm. veh.		PRO	92137903	ø 336 x 22 x 67	⊖ M-technology ⊕ governm. veh.
					TPM0003					TPM0003		
										91049300	ø 185 x 20	⊕ governm. veh.
										91053300	ø 160.5 x 20	
										97003100		⊕ governm. veh.
										97012600		⊖ governm. veh.
57700														
320 d	01/05→12/11	120 / 163	Ate		2331301	[o] 23313 20.3	⊖ M-technology ⊖ governm. veh.	Ate		2355001	[o] 23550 17.3	⊕ governm. veh.
			Ate	epad	2331381	[o] 23313 20.3	⊖ M-technology ⊖ governm. veh.	Ate	epad	2355081	[o] 23550 17.3	⊕ governm. veh.
			Ate		2379401	[o] 23794 20.3	⊖ M-technology ⊕ governm. veh.	Ate		2392701	[o] 23927 17.3	⊖ governm. veh.
			Ate	epad	2379481	[o] 23794 20.3	⊖ M-technology ⊕ governm. veh.	Ate	epad	2392781	[o] 23927 17.3	⊖ governm. veh.
			Bre		2431601	[o] 24316 17	⊕ M-technology ⊖ governm. veh.			98031300	L1093	→03/10
					98031200	L635	⊖ M-technology ⊖ governm. veh. →03/10			98043900	L1110	03/10→
					98043700	L650	⊖ M-technology ⊖ governm. veh. 03/10→	Ate		82028700		⊖ governm. veh.
					98043800	L723	⊖ M-technology ⊕ governm. veh. 03/10→	Ate		82057500		⊖ governm. veh.
					98046000	L695	⊕ M-technology ⊕ governm. veh. →03/10	Ate		82062900		⊖ M-technology
			Bre		82504600		⊕ M-technology		PRO	92133003	ø 300 x 20 x 66.1	⊖ governm. veh.
			Ate		82062900		⊖ M-technology		PRO	92137903	ø 336 x 22 x 67	⊕ governm. veh.

→

kW / hp

3 (E90) 01/05→12/11

57700													
320 d	01/05→12/11	120 / 163	Ate		82074500		⊖ M-technology				TPM0003		
				PRO	92137703	ø 300 x 24 x 73.5	⊖ M-technology ⊖ governm. veh.				91049300	ø 185 x 20	⊕ governm. veh.
				PRO	92137803	ø 330 x 24 x 73	⊖ M-technology ⊕ governm. veh. Ø 330 mm				91053300	ø 160.5 x 20	⊖ governm. veh.
				PRO	92176103	ø 312 x 24 x 73.5	⊖ M-technology ⊕ governm. veh. Ø 312 mm				97003100		⊕ governm. veh.
					TPM0003						97012600		⊖ governm. veh.
57800													
320 d	09/05→12/11	110 / 150	Ate		2331301	[o] 23313 20.3	⊖ M-technology ⊖ governm. veh.	Ate		2355001	[o] 23550 17.3	⊕ governm. veh.	
			Ate	epad	2331381	[o] 23313 20.3	⊖ M-technology ⊖ governm. veh.	Ate	epad	2355081	[o] 23550 17.3	⊕ governm. veh.	
			Ate		2379401	[o] 23794 20.3	⊖ M-technology ⊕ governm. veh.	Ate		2392701	[o] 23927 17.3	⊖ governm. veh.	
			Ate	epad	2379481	[o] 23794 20.3	⊖ M-technology ⊕ governm. veh.	Ate	epad	2392781	[o] 23927 17.3	⊖ governm. veh.	
			Bre		2431601	[o] 24316 17	⊕ M-technology ⊖ governm. veh.			98031300	L1093	→03/10	
					98031200	L635	⊖ M-technology ⊖ governm. veh. →03/10			98043900	L1110	03/10→	
					98043700	L650	⊖ M-technology ⊖ governm. veh. 03/10→	Ate		82028700		⊖ governm. veh.	
					98043800	L723	⊖ M-technology ⊕ governm. veh. 03/10→	Ate		82057500		⊖ governm. veh.	
					98046000	L695	⊕ M-technology ⊕ governm. veh. →03/10	Ate		82062900		⊖ M-technology	
			Bre		82504600		⊕ M-technology		PRO	92133003	ø 300 x 20 x 66.1	⊖ governm. veh.	
			Ate		82062900		⊖ M-technology		PRO	92137903	ø 336 x 22 x 67	⊕ governm. veh.	
			Ate		82074500		⊖ M-technology			TPM0003			
				PRO	92137703	ø 300 x 24 x 73.5	⊖ M-technology ⊖ governm. veh.			91049300	ø 185 x 20	⊕ governm. veh.	
				PRO	92137803	ø 330 x 24 x 73	⊖ M-technology ⊕ governm. veh.			91053300	ø 160.5 x 20	⊖ governm. veh.	
					TPM0003					97003100		⊕ governm. veh.	
										97012600		⊖ governm. veh.	
57900													
320 d	09/07→12/11	130 / 177	Ate		2331301	[o] 23313 20.3	⊖ M-technology ⊖ governm. veh.	Ate		2355001	[o] 23550 17.3	⊕ governm. veh.	
320 d	01/10→12/11	135 / 184	Ate	epad	2331381	[o] 23313 20.3	⊖ M-technology ⊖ governm. veh.	Ate	epad	2355081	[o] 23550 17.3	⊕ governm. veh.	
			Ate		2379401	[o] 23794 20.3	⊖ M-technology ⊕ governm. veh.	Ate		2392701	[o] 23927 17.3	⊖ governm. veh.	
			Ate	epad	2379481	[o] 23794 20.3	⊖ M-technology ⊕ governm. veh.	Ate	epad	2392781	[o] 23927 17.3	⊖ governm. veh.	
			Bre		2431601	[o] 24316 17	⊕ M-technology ⊖ governm. veh.			98031300	L1093	→03/10	
					98031200	L635	⊖ M-technology ⊖ governm. veh. →03/10			98043900	L1110	03/10→	
					98043700	L650	⊖ M-technology ⊖ governm. veh. 03/10→	Ate		82028700		⊖ governm. veh.	
					98043800	L723	⊖ M-technology ⊕ governm. veh. 03/10→	Ate		82057500		⊕ governm. veh.	
					98046000	L695	⊕ M-technology ⊕ governm. veh. →03/10	Ate		82062900		⊖ M-technology	
			Bre		82504600		⊕ M-technology		PRO	92133003	ø 300 x 20 x 66.1	⊖ governm. veh.	
			Ate		82062900		⊖ M-technology		PRO	92137903	ø 336 x 22 x 67	⊕ governm. veh.	
			Ate		82074500		⊖ M-technology			TPM0003			
				PRO	92137803	ø 330 x 24 x 73	⊖ M-technology ⊕ governm. veh.			91049300	ø 185 x 20	⊕ governm. veh.	
				PRO	92176103	ø 312 x 24 x 73.5	⊖ M-technology ⊖ governm. veh.			91053300	ø 160.5 x 20	⊖ governm. veh.	
					TPM0003					97003100		⊕ governm. veh.	
										97012600		⊖ governm. veh.	
58000													
320 d xDrive	07/08→12/11	120 / 163	Ate		2331301	[o] 23313 20.3	⊖ governm. veh.	Ate		2355001	[o] 23550 17.3	⊕ governm. veh.	
320 d xDrive	09/08→12/11	130 / 177											
320 d xDrive	01/10→12/11	135 / 184	Ate	epad	2331381	[o] 23313 20.3	⊖ governm. veh.	Ate	epad	2355081	[o] 23550 17.3	⊕ governm. veh.	
320 xd	09/07→12/11	130 / 177	Ate		2379401	[o] 23794 20.3	⊕ governm. veh.	Ate		2392701	[o] 23927 17.3	⊖ governm. veh.	

BMW

BMW

kW / hp

3 (E90) 01/05→12/11

58000														
320 d xDrive	07/08→12/11	120 / 163	Ate	epad	2379481	[o] 23794 20.3	⊕ governm. veh.	Ate	epad	2392781	[o] 23927 17.3	⊖ governm. veh.
320 d xDrive	09/08→12/11	130 / 177			98035500	L850	⊖ governm. veh. →03/10			98031300	L1093	→03/10
320 d xDrive	01/10→12/11	135 / 184			98043800	L723	⊕ governm. veh. 03/10→			98043900	L1110	03/10→
320 xd	09/07→12/11	130 / 177			98044300	L865	⊖ governm. veh. 03/10→	Ate		82028700		⊖ governm. veh.
					98046000	L695	⊕ governm. veh. →03/10	Ate		82057500		⊕ governm. veh.
			Ate		82062900			Ate		82062900		
			Ate		82074500				PRO	92137903	ø 336 x 22 x 67	⊕ governm. veh.
				PRO	92137803	ø 330 x 24 x 73	⊕ governm. veh.		PRO	92154903	ø 300 x 20 x 66	⊖ governm. veh.
				PRO	92176103	ø 312 x 24 x 73.5	⊖ governm. veh.			TPM0003		
					TPM0003					91049300	ø 185 x 20	
										97003100		
58100														
320 i	01/05→03/07	110 / 150	Ate		2379401	[o] 23794 20.3	⊕ incr. payload ⊖ M-technology	Luc		2362303	[o] 23623 17.4	⊖ incr. payload ⊖ M-technology
			Ate	epad	2379481	[o] 23794 20.3	⊕ incr. payload ⊖ M-technology	Luc	epad	2362381	[o] 23623 17.4	⊖ incr. payload ⊖ M-technology
			Ate		2393501	[o] 23935 17.8	⊖ incr. payload ⊖ M-technology	Ate		2392701	[o] 23927 17.3	⊕ incr. payload ⊕ M-technology
			Ate	epad	2393581	[o] 23935 17.8	⊖ incr. payload ⊖ M-technology	Ate	epad	2392781	[o] 23927 17.3	⊕ incr. payload ⊕ M-technology
			Bre		2431601	[o] 24316 17	⊖ incr. payload ⊕ M-technology			98031300	L1093	
					98031200	L635	⊖ incr. payload ⊖ M-technology	Luc		82060100		⊖ incr. payload ⊖ M-technology
					98046000	L695	⊕ incr. payload ⊕ M-technology	Ate		82028700		⊕ incr. payload ⊕ M-technology
			Bre		82504600		⊕ M-technology ⊖ incr. payload	Ate		82062900		
			Ate		82039300		⊖ incr. payload	Luc		82063300		
			Ate		82062900				PRO	92133103	ø 296 x 10.5 x 65.1	⊖ incr. payload ⊖ M-technology
			Ate		82074500		⊕ incr. payload		PRO	92133003	ø 300 x 20 x 66.1	⊕ incr. payload ⊕ M-technology
				PRO	92132803	ø 292 x 22 x 73	⊖ incr. payload ⊖ M-technology			TPM0003		
				PRO	92132805	ø 292 x 22 x 73	⊖ incr. payload ⊖ M-technology			91053300	ø 160.5 x 20	
				PRO	92137703	ø 300 x 24 x 73.5	⊕ incr. payload ⊖ M-technology			97012600		
					TPM0003							
58200												
320 i	03/07→12/11	115 / 156	Ate		2331301	[o] 23313 20.3	⊖ M-technology ⊕ incr. payload	Ate		2392701	[o] 23927 17.3	
320 i	09/07→12/11	125 / 170	Ate	epad	2331381	[o] 23313 20.3	⊖ M-technology ⊕ incr. payload	Ate	epad	2392781	[o] 23927 17.3	
			Ate		2409601	[o] 24096 20.3	⊖ M-technology ⊖ incr. payload			98031300	L1093	→03/10
			Ate	epad	2409681	[o] 24096 20.3	⊖ M-technology ⊖ incr. payload			98043900	L1110	03/10→
			Bre		2431601	[o] 24316 17	⊖ incr. payload ⊕ M-technology	Ate		82028700		
					98031200	L635	⊖ M-technology ⊖ incr. payload →03/10	Ate		82062900		
					98043700	L650	⊖ M-technology ⊖ incr. payload 03/10→		PRO	92133003	ø 300 x 20 x 66.1	
					98043800	L723	⊕ M-technology ⊕ incr. payload 03/10→			TPM0003		
					98046000	L695	⊕ M-technology ⊕ incr. payload →03/10			91053300	ø 160.5 x 20	
			Bre		82504600		⊕ M-technology			97012600		
			Ate		82062900		⊖ M-technology					
			Ate		82074500		⊖ M-technology					
				PRO	92137703	ø 300 x 24 x 73.5	⊖ M-technology ⊖ incr. payload					
				PRO	92176103	ø 312 x 24 x 73.5	⊖ M-technology ⊕ incr. payload					

→

3 (E90) 01/05→12/11

320 i	03/07→12/11	58200 115 / 156		TPM0003							
320 i	09/07→12/11	125 / 170									
320 si	05/06→12/11	58300 127 / 173	Ate	2379401	[o] 23794 20.3		Ate	2392701	[o] 23927 17.3		
			Ate	2379481	[o] 23794 20.3		Ate	2392781	[o] 23927 17.3		
				98031200	L635			98031300	L1093		
			Ate	82062900			Ate	82028700			
			Ate	82074500			Ate	82062900			
				92137703	ø 300 x 24 x 73.5			92154903	ø 300 x 20 x 66		
				TPM0003				TPM0003			
								91053300	ø 160.5 x 20		
								97012600			
323 i	04/06→12/11	58400 130 / 177	Ate	2331301	[o] 23313 20.3	⊖ M-technology	Ate	2392701	[o] 23927 17.3		
			Ate	2331381	[o] 23313 20.3	⊖ M-technology	Ate	2392781	[o] 23927 17.3		
			Bre	2431601	[o] 24316 17	⊕ M-technology		98031300	L1093		
				98031200	L635	⊖ M-technology	Ate	82028700			
				98046000	L695	⊕ M-technology	Ate	82062900			
			Bre	82504600		⊕ M-technology		92133003	ø 300 x 20 x 66.1		
			Ate	82062900		⊖ M-technology		TPM0003			
			Ate	82074500		⊖ M-technology		91053300	ø 160.5 x 20		
				92137703	ø 300 x 24 x 73.5	⊖ M-technology		97012600			
				TPM0003							
323 i	03/08→12/11	58500 140 / 190	Ate	2331301	[o] 23313 20.3	⊖ M-technology	Ate	2392701	[o] 23927 17.3		
			Ate	2331381	[o] 23313 20.3	⊖ M-technology	Ate	2392781	[o] 23927 17.3		
			Bre	2431601	[o] 24316 17	⊕ M-technology		98031300	L1093		
				98031200	L635	⊖ M-technology →03/10	Ate	82028700			
				98043800	L723	⊖ M-technology 03/10→	Ate	82062900			
				98046000	L695	⊕ M-technology		92133003	ø 300 x 20 x 66.1		
			Bre	82504600		⊕ M-technology		TPM0003			
			Ate	82062900		⊖ M-technology		91053300	ø 160.5 x 20		
			Ate	82074500		⊖ M-technology		97012600			
				92137703	ø 300 x 24 x 73.5	⊖ M-technology					
				TPM0003							
325 d	09/06→12/11	58600 145 / 197	Ate	2331303	[–] 23313 20.3	⊖ M-technology ⊕ governm. veh.	Ate	2355001	[o] 23550 17.3	⊖ M-technology	
			Ate	2331382	[o] 23313 20.3	⊖ M-technology ⊕ governm. veh.	Ate	2355081	[o] 23550 17.3	⊖ M-technology	
			Ate	2379401	[o] 23794 20.3	⊖ M-technology ⊖ governm. veh.	Bre	2431501	[o] 24315 16.9	⊕ M-technology	
			Ate	2379481	[o] 23794 20.3	⊖ M-technology ⊖ governm. veh.		98031300	L1093	→03/10	
			Bre	2431601	[o] 24316 17	⊕ M-technology ⊖ governm. veh.		98043900	L1110	03/10→	
				98031200	L635	⊖ M-technology ⊖ governm. veh. →03/10	Bre	82504500		⊕ M-technology	
				98043800	L723	⊖ M-technology 03/10→	Ate	82057500		⊖ M-technology	
				98046000	L695	⊕ M-technology ⊕ governm. veh. →03/10	Ate	82062900		⊖ M-technology	
			Bre	82504600		⊕ M-technology		92137903	ø 336 x 22 x 67	⊖ M-technology	

BMW

BMW

30 kW / hp

3 (E90) 01/05→12/11

58600													
325 d	09/06→12/11	145 / 197	Ate		82062900		⊖ M-technology ⊖ governm. veh.				TPM0003		
			Ate		82072000		⊖ M-technology				91049300	ø 185 x 20	
			Ate		82074500		⊖ M-technology ⊖ governm. veh.				97003100		
				PRO	92137803	ø 330 x 24 x 73	⊖ M-technology ⊖ governm. veh.						
				PRO	92155303	ø 348 x 30 x 73.2	⊖ M-technology ⊕ governm. veh.						
					TPM0003								
58700													
325 d	01/10→12/11	150 / 204	Ate		2331303	[–] 23313 20.3	⊖ M-technology ⊕ governm. veh.	Ate		2355001	[o] 23550 17.3	⊖ M-technology	
			Ate	epad	2331382	[o] 23313 20.3	⊖ M-technology ⊕ governm. veh.	Ate	epad	2355081	[o] 23550 17.3	⊖ M-technology	
			Ate		2379401	[o] 23794 20.3	⊖ M-technology ⊖ governm. veh.	Bre		2431501	[o] 24315 16.9	⊕ M-technology	
			Ate	epad	2379481	[o] 23794 20.3	⊖ M-technology ⊖ governm. veh.			98031300	L1093	→03/10	
			Bre		2431601	[o] 24316 17	⊕ M-technology ⊖ governm. veh.			98043900	L1110	03/10→	
					98031200	L635	⊖ M-technology ⊖ governm. veh. →03/10	Bre		82504500		⊕ M-technology	
					98043800	L723	⊖ M-technology 03/10→	Ate		82057500		⊖ M-technology	
					98046000	L695	⊕ M-technology ⊕ governm. veh. →03/10	Ate		82062900		⊖ M-technology	
			Bre		82504600		⊕ M-technology		PRO	92137903	ø 336 x 22 x 67	⊖ M-technology	
			Ate		82072000		⊖ M-technology			TPM0003			
			Ate		82074500		⊖ M-technology ⊖ governm. veh.			91049300	ø 185 x 20		
				PRO	92137803	ø 330 x 24 x 73	⊖ M-technology ⊖ governm. veh.			97003100			
				PRO	92155303	ø 348 x 30 x 73.2	⊖ M-technology ⊕ governm. veh.						
					TPM0003								
58800													
325 i	01/05→12/11	160 / 218	Ate		2379401	[o] 23794 20.3	⊖ M-technology	Ate		2355001	[o] 23550 17.3	⊕ incr. payload	
			Ate	epad	2379481	[o] 23794 20.3	⊖ M-technology	Ate	epad	2355081	[o] 23550 17.3	⊕ incr. payload	
			Bre		2431601	[o] 24316 17	⊕ M-technology	Ate		2392701	[o] 23927 17.3	⊖ incr. payload	
					98031200	L635	⊖ M-technology ⊖ incr. payload →03/10	Ate	epad	2392781	[o] 23927 17.3	⊖ incr. payload	
					98043800	L723	⊖ M-technology 03/10→			98031300	L1093	→03/10	
					98046000	L695	⊕ M-technology ⊕ incr. payload →03/10			98043900	L1110	03/10→	
			Bre		82504600		⊕ M-technology	Ate		82028700		⊕ M-technology	
			Ate		82057500		⊖ M-technology	Ate		82062900		⊖ M-technology	
			Ate		82062900		⊖ M-technology		PRO	92133003	ø 300 x 20 x 66.1	⊖ incr. payload	
			Ate		82074500		⊖ M-technology		PRO	92137903	ø 336 x 22 x 67	⊕ incr. payload	
				PRO	92137703	ø 300 x 24 x 73.5	⊖ M-technology ⊖ incr. payload			TPM0003			
				PRO	92137803	ø 330 x 24 x 73	⊖ M-technology ⊕ incr. payload			91049300	ø 185 x 20	⊕ incr. payload	
					TPM0003					91053300	ø 160.5 x 20	⊖ incr. payload	
										97003100		⊕ incr. payload	
										97012600		⊖ incr. payload	
58900													
325 i	01/06→	155 / 211	Ate		2379401	[o] 23794 20.3	⊖ M-technology	Ate		2392701	[o] 23927 17.3		
			Ate	epad	2379481	[o] 23794 20.3	⊖ M-technology	Ate	epad	2392781	[o] 23927 17.3		
			Bre		2431601	[o] 24316 17	⊕ M-technology			98031300	L1093	⊖ M-technology →2010-03 ⊕ M-technology	
					98031200	L635	⊖ M-technology →2010-03			98043900	L1110	⊖ M-technology 2010-03→	
					98043700	L650	⊖ M-technology 2010-03→	Ate		82028700			

→

30 kW / hp

3 (E90) 01/05→12/11

325 i	01/06→	58900 155 / 211		98046000	L695	⊕ M-technology		92133003	ø 300 x 20 x 66.1	
			Bre	82504600		⊕ M-technology		TPM0003		
			Ate	82074500		⊖ M-technology		91053300	ø 160.5 x 20	
				92137703	ø 300 x 24 x 73.5	⊖ M-technology		97012600		
				TPM0003						
325 i	09/06→12/07	59000 143 / 194	Ate	2379401	[o] 23794 20.3		Ate	2392701	[o] 23927 17.3	
			Ate	2379481	[o] 23794 20.3		Ate	2392781	[o] 23927 17.3	
				98031200	L635			98031300	L1093	
			Ate	82074500			Ate	82028700		
				92137703	ø 300 x 24 x 73.5			92133003	ø 300 x 20 x 66.1	
				TPM0003				TPM0003		
								91053300	ø 160.5 x 20	
								97012600		
325 i	09/07→12/08	59100 141 / 192	Ate	2379401	[o] 23794 20.3		Ate	2392701	[o] 23927 17.3	
			Ate	2379481	[o] 23794 20.3		Ate	2392781	[o] 23927 17.3	
				98031200	L635			98031300	L1093	
			Ate	82062900			Ate	82028700		
			Ate	82074500			Ate	82062900		
				92137703	ø 300 x 24 x 73.5			92133003	ø 300 x 20 x 66.1	
				TPM0003				TPM0003		
								91053300	ø 160.5 x 20	
								97012600		
325 i	09/07→12/11	59200 160 / 218	Ate	2331301	[o] 23313 20.3	⊖ M-technology ⊖ incr. payload	Ate	2355001	[o] 23550 17.3	⊕ incr. payload
			Ate	2331381	[o] 23313 20.3	⊖ M-technology ⊖ incr. payload	Ate	2355081	[o] 23550 17.3	⊕ incr. payload
			Ate	2379401	[o] 23794 20.3	⊕ incr. payload ⊖ M-technology	Ate	2392701	[o] 23927 17.3	⊖ incr. payload
			Ate	2379481	[o] 23794 20.3	⊕ incr. payload ⊖ M-technology	Ate	2392781	[o] 23927 17.3	⊖ incr. payload
			Bre	2431601	[o] 24316 17	⊕ M-technology		98031300	L1093	→03/10
				98031200	L635	⊖ M-technology →03/10		98043900	L1110	03/10→
				98043800	L723	⊖ M-technology 03/10→	Ate	82028700		⊕ M-technology
				98046000	L695	⊕ M-technology ⊕ incr. payload →03/10	Ate	82057500		⊖ M-technology
			Bre	82504600		⊕ M-technology	Ate	82062900		
			Ate	82062900		⊖ M-technology		92133003	ø 300 x 20 x 66.1	⊖ incr. payload
			Ate	82074500		⊖ M-technology		92137903	ø 336 x 22 x 67	⊕ incr. payload
				92137803	ø 330 x 24 x 73	⊖ M-technology ⊕ incr. payload		TPM0003		
				92176103	ø 312 x 24 x 73.5	⊖ M-technology ⊖ incr. payload		91049300	ø 185 x 20	⊕ incr. payload
				TPM0003				91053300	ø 160.5 x 20	⊖ incr. payload
								97003100		⊕ incr. payload
								97012600		⊖ incr. payload
325 i	09/08→12/10	59300 224 / 305	Ate	2379401	[o] 23794 20.3		Ate	2355001	[o] 23550 17.3	
			Ate	2379481	[o] 23794 20.3		Ate	2355081	[o] 23550 17.3	

BMW

BMW

		kW / hp											
3 (E90) 01/05→12/11													
		59300	Ate		82062900				Ate		82028700		
325 i	09/08→12/10	224 / 305	Ate		82074500				Ate		82062900		
				PRO	92137803	ø 330 x 24 x 73				PRO	92137903	ø 336 x 22 x 67	
					TPM0003						TPM0003		
											91049300	ø 185 x 20	
											97003100		
		59400	Ate		2331301	[o] 23313 20.3	⊖ incr. payload		Ate		2355001	[o] 23550 17.3	⊕ incr. payload
325 i xDrive	09/08→12/11	160 / 218											
325 xi	01/05→12/11	160 / 218											
325 xi	09/07→12/11	160 / 218	Ate	epad	2331381	[o] 23313 20.3	⊖ incr. payload		Ate	epad	2355081	[o] 23550 17.3	⊕ incr. payload
			Ate		2379401	[o] 23794 20.3	⊕ incr. payload		Ate		2392701	[o] 23927 17.3	⊖ incr. payload
			Ate	epad	2379481	[o] 23794 20.3	⊕ incr. payload		Ate	epad	2392781	[o] 23927 17.3	⊖ incr. payload
					98035500	L850	→03/10				98031300	L1093	→03/10
					98044300	L865	03/10→				98043900	L1110	03/10→
			Ate		82062900				Ate		82028700		⊖ incr. payload
			Ate		82074500				Ate		82057500		
				PRO	92137703	ø 300 x 24 x 73.5	⊖ incr. payload		Ate		82062900		
				PRO	92137803	ø 330 x 24 x 73	⊕ incr. payload			PRO	92137903	ø 336 x 22 x 67	⊕ incr. payload
				PRO	92176103	ø 312 x 24 x 73.5	⊖ incr. payload			PRO	92154903	ø 300 x 20 x 66	⊖ incr. payload
					TPM0003						TPM0003		
											91049300	ø 185 x 20	⊕ incr. payload
											91053300	ø 160.5 x 20	⊖ incr. payload
											97003100		⊕ incr. payload
											97012600		⊖ incr. payload
		59500	Ate		2331301	[o] 23313 20.3	⊖ M-technology 09/07→		Ate		2392701	[o] 23927 17.3	
328 i	07/05→11/07	187 / 254	Ate	epad	2331381	[o] 23313 20.3	⊖ M-technology 09/07→		Ate	epad	2392781	[o] 23927 17.3	
			Ate		2379401	[o] 23794 20.3	⊖ M-technology →09/07				98031300	L1093	
			Ate	epad	2379481	[o] 23794 20.3	⊖ M-technology →09/07		Ate		82028700		⊕ M-technology
			Bre		2431601	[o] 24316 17	⊕ M-technology		Ate		82062900		
					98046000	L695				PRO	92133003	ø 300 x 20 x 66.1	
			Bre		82504600		⊕ M-technology				TPM0003		
			Ate		82062900		⊖ M-technology →09/07				91053300	ø 160.5 x 20	
				PRO	92137703	ø 300 x 24 x 73.5	⊖ M-technology →09/07				97012600		
				PRO	92176103	ø 312 x 24 x 73.5	⊖ M-technology 09/07→						
					TPM0003								
		59600	Ate		2331301	[o] 23313 20.3	⊖ M-technology 09/07→		Ate		2392701	[o] 23927 17.3	
328 i	03/07→12/11	171 / 234	Ate	epad	2331381	[o] 23313 20.3	⊖ M-technology 09/07→		Ate	epad	2392781	[o] 23927 17.3	
			Ate		2379401	[o] 23794 20.3	⊖ M-technology →09/07				98031300	L1093	→03/10
			Ate	epad	2379481	[o] 23794 20.3	⊖ M-technology →09/07				98043900	L1110	03/10→
			Bre		2431601	[o] 24316 17	⊕ M-technology		Ate		82028700		⊕ M-technology
					98043800	L723	⊖ M-technology 03/10→		Ate		82062900		
					98046000	L695	⊕ M-technology ⊖ M-technology →03/10			PRO	92133003	ø 300 x 20 x 66.1	

→

		kW / hp									
3 (E90)	**01/05→12/11**										
		59600	Bre		**82504600**		⊕ M-technology			**TPM0003**		
328 i	03/07→12/11	171 / 234	Ate		**82062900**		⊖ M-technology →09/07			**91053300**	ø 160.5 x 20	
				PRO	**92137703**	ø 300 x 24 x 73.5	⊖ M-technology →09/07			**97012600**		
				PRO	**92176103**	ø 312 x 24 x 73.5	⊖ M-technology 09/07→					
					TPM0003							
		59700	Ate		**2331301**	[o] 23313 20.3		Ate		**2392701**	[o] 23927 17.3	→2009.09
328 i xDrive	09/08→12/10	171 / 234	Ate	epad	**2331381**	[o] 23313 20.3		Ate	epad	**2392781**	[o] 23927 17.3	→2009.09
					98035500	L850	left →2010-03			**98031300**	L1093	→2010-03
					98044300	L865	left 2010-03→			**98043900**	L1110	2010-03→
			Ate		**82074500**			Ate		**82028700**		
				PRO	**92176103**	ø 312 x 24 x 73.5			PRO	**92154903**	ø 300 x 20 x 66	
					TPM0003					**TPM0003**		
										91049300	ø 185 x 20	
										97003100		
		59800	Ate		**2331303**	[–] 23313 20.3	09/07→	Ate		**2355001**	[o] 23550 17.3	
330 d	09/05→12/11	170 / 231	Ate	epad	**2331382**	[o] 23313 20.3	09/07→	Ate	epad	**2355081**	[o] 23550 17.3	
			Ate		**2379401**	[o] 23794 20.3	→09/07			**98031300**	L1093	→03/10
			Ate	epad	**2379481**	[o] 23794 20.3	→09/07			**98043900**	L1110	03/10→
					98043800	L723	03/10→	Ate		**82057500**		⊖ M-technology
					98046000	L695	→03/10	Ate		**82062900**		
			Ate		**82062900**		→09/07		PRO	**92137903**	ø 336 x 22 x 67	
			Ate		**82072000**		⊖ M-technology			**TPM0003**		
			Ate		**82074500**		⊖ M-technology			**91049300**	ø 185 x 20	
				PRO	**92137803**	ø 330 x 24 x 73	→09/07			**97003100**		
				PRO	**92155303**	ø 348 x 30 x 73.2	09/07→					
					TPM0003							
		59900	Ate		**2331303**	[–] 23313 20.3	⊖ M-technology →09/09 09/09→ ⊕ incr. payload	Ate		**2355001**	[o] 23550 17.3	⊖ M-technology
330 d	01/09→12/11	180 / 245	Ate	epad	**2331382**	[o] 23313 20.3	⊖ M-technology →09/09 09/09→ ⊕ incr. payload	Ate	epad	**2355081**	[o] 23550 17.3	⊖ M-technology
			Ate		**2379401**	[o] 23794 20.3	09/09→ ⊖ M-technology ⊖ incr. payload	Bre		**2431501**	[o] 24315 16.9	⊕ M-technology
			Ate	epad	**2379481**	[o] 23794 20.3	09/09→ ⊖ M-technology ⊖ incr. payload			**98031300**	L1093	→03/10
			Bre		**2431601**	[o] 24316 17	⊕ M-technology			**98043900**	L1110	03/10→
					98043800	L723	⊖ M-technology 03/10→	Bre		**82504500**		⊕ M-technology
					98046000	L695	→03/10 03/10→ ⊕ M-technology	Ate		**82062900**		⊖ M-technology
			Bre		**82504600**		⊕ M-technology		PRO	**92137903**	ø 336 x 22 x 67	⊖ M-technology
			Ate		**82062900**		⊖ M-technology 09/09→ ⊖ incr. payload			**TPM0003**		
				PRO	**92137803**	ø 330 x 24 x 73	09/09→ ⊖ M-technology ⊖ incr. payload			**91049300**	ø 185 x 20	
				PRO	**92155303**	ø 348 x 30 x 73.2	→09/09 ⊖ M-technology 09/09→ ⊕ incr. payload			**97003100**		
					TPM0003							
		60000	Ate		**2331303**	[–] 23313 20.3	⊕ incr. payload →09/09 ⊖ incr. payload	Ate		**2355001**	[o] 23550 17.3	
330 d xDrive	01/09→12/11	180 / 245										
330 i xDrive	09/08→12/11	200 / 272										
330 xd	09/05→12/11	170 / 231	Ate	epad	**2331382**	[o] 23313 20.3	⊕ incr. payload →09/09 ⊖ incr. payload	Ate	epad	**2355081**	[o] 23550 17.3	
330 xi	01/05→12/11	190 / 258										
330 xi	09/07→12/11	200 / 272										

BMW

BMW

30 kW / hp

3 (E90) 01/05→12/11

60000

330 d xDrive	01/09→12/11	180 / 245
330 i xDrive	09/08→12/11	200 / 272
330 xd	09/05→12/11	170 / 231
330 xi	01/05→12/11	190 / 258
330 xi	09/07→12/11	200 / 272

Ate		2379401	[o] 23794 20.3	09/09→ ⊖ incr. payload			98031300	L1093	→03/10
Ate	epad	2379481	[o] 23794 20.3	09/09→ ⊖ incr. payload			98043900	L1110	03/10→
		98035500	L850	→03/10	Ate		82057500		
		98044300	L865	03/10→	Ate		82062900		
Ate		82062900		09/09→ ⊖ incr. payload		PRO	92137903	ø 336 x 22 x 67	
Ate		82072000					TPM0003		
Ate		82074500					91049300	ø 185 x 20	
	PRO	92137803	ø 330 x 24 x 73	09/09→ ⊖ incr. payload			97003100		
	PRO	92155303	ø 348 x 30 x 73.2	⊕ incr. payload →09/09 ⊖ incr. payload					
		TPM0003							

60100

330 i 01/05→12/11 190 / 258

Ate		2331303	[–] 23313 20.3	09/07→ ⊕ incr. payload	Ate		2355001	[o] 23550 17.3	
Ate	epad	2331382	[o] 23313 20.3	09/07→ ⊕ incr. payload	Ate	epad	2355081	[o] 23550 17.3	
Ate		2379401	[o] 23794 20.3	⊖ incr. payload →09/07 ⊕ incr. payload			98031300	L1093	→03/10
Ate	epad	2379481	[o] 23794 20.3	⊖ incr. payload →09/07 ⊕ incr. payload			98043900	L1110	03/10→
		98031200	L635	→03/10 ⊖ incr. payload	Ate		82057500		
		98043700	L650	03/10→ ⊖ incr. payload	Ate		82062900		
		98043800	L723	03/10→ ⊕ incr. payload		PRO	92137903	ø 336 x 22 x 67	
		98046000	L695	→03/10 ⊕ incr. payload			TPM0003		
Ate		82062900		⊖ incr. payload →09/07 ⊕ incr. payload			91049300	ø 185 x 20	
Ate		82072000					97003100		
Ate		82074500							
	PRO	92137803	ø 330 x 24 x 73	⊖ incr. payload →09/07 ⊕ incr. payload					
	PRO	92155303	ø 348 x 30 x 73.2	09/07→ ⊕ incr. payload					
		TPM0003							

60200

330 i 09/06→12/07 175 / 235

Ate		2379401	[o] 23794 20.3		Ate		2355001	[o] 23550 17.3	
Ate	epad	2379481	[o] 23794 20.3		Ate	epad	2355081	[o] 23550 17.3	
		98031200	L635				98031300	L1093	
Ate		82062900			Ate		82028700		
Ate		82074500			Ate		82062900		
	PRO	92137803	ø 330 x 24 x 73			PRO	92137903	ø 336 x 22 x 67	
		TPM0003					TPM0003		
							91049300	ø 185 x 20	
							97003100		

60300

330 i 09/07→12/11 200 / 272

Ate		2331303	[–] 23313 20.3		Ate		2355001	[o] 23550 17.3	
Ate	epad	2331382	[o] 23313 20.3		Ate	epad	2355081	[o] 23550 17.3	
		98043800	L723	03/10→			98031300	L1093	→03/10
		98046000	L695	→03/10			98043900	L1110	03/10→
Ate		82072000		⊖ M-technology	Ate		82057500		
	PRO	92155303	ø 348 x 30 x 73.2		Ate		82062900		
		TPM0003				PRO	92137903	ø 336 x 22 x 67	

→

3 (E90) 01/05→12/11

		kW / hp											
330 i	09/07→12/11	60300 200 / 272								TPM0003			
										91049300	ø 185 x 20		
										97003100			
335 d	09/06→12/11	60400 210 / 286	Ate		2331303	[–] 23313 20.3		Ate		2355001	[o] 23550 17.3		
335 i	09/06→12/11	225 / 306											
335 i	10/06→12/11	220 / 299	Ate	epad	2331382	[o] 23313 20.3		Ate	epad	2355081	[o] 23550 17.3		
					98043800	L723	03/10→			98031300	L1093	→03/10	
					98046000	L695	→03/10			98043900	L1110	03/10→	
			Ate		82072000			Ate		82057500			
				PRO	92155303	ø 348 x 30 x 73.2		Ate		82062900			
					TPM0003				PRO	92137903	ø 336 x 22 x 67		
										TPM0003			
										91049300	ø 185 x 20		
										97003100			
335 d	09/10→	60500 221 / 301	Ate		2331303	[–] 23313 20.3		Ate		2355001	[o] 23550 17.3		
			Ate	epad	2331382	[o] 23313 20.3		Ate	epad	2355081	[o] 23550 17.3		
					98043800	L723				98043900	L1110		
			Ate		82072000			Ate		82057500			
				PRO	92155303	ø 348 x 30 x 73.2			PRO	92137903	ø 336 x 22 x 67		
					TPM0003					TPM0003			
										91049300	ø 185 x 20		
										97003100			
335 i	01/11→12/11	60600 224 / 305	Ate		2331303	[–] 23313 20.3		Ate		2355001	[o] 23550 17.3		
			Ate	epad	2331382	[o] 23313 20.3		Ate	epad	2355081	[o] 23550 17.3		
					98043800	L723				98043900	L1110		
			Ate		82072000			Ate		82057500			
				PRO	92155303	ø 348 x 30 x 73.2		Ate		82062900			
					TPM0003				PRO	92137903	ø 336 x 22 x 67		
										TPM0003			
										91049300	ø 185 x 20		
										97003100			
335 i xDrive	09/08→	60700 224 / 305	Ate		2331303	[–] 23313 20.3		Ate		2355001	[o] 23550 17.3		
			Ate	epad	2331382	[o] 23313 20.3		Ate	epad	2355081	[o] 23550 17.3		
					98035500	L850	left →2010-03			98031300	L1093	→2010-03	
					98044300	L865	left 2010-03→			98043900	L1110	2010-03→	
			Ate		82072000			Ate		82057500			
				PRO	92155303	ø 348 x 30 x 73.2			PRO	92137903	ø 336 x 22 x 67		
					TPM0003					TPM0003			
										91049300	ø 185 x 20		
										97003100			
335 i xDrive	09/08→12/11	60800 225 / 306	Ate		2331303	[–] 23313 20.3		Ate		2355001	[o] 23550 17.3		
335 xi	09/07→12/11	225 / 306											

BMW

BMW

		kW / hp										
3 (E90) 01/05→12/11												
60800			Ate	epad	2331382	[o] 23313 20.3		Ate	epad	2355081	[o] 23550 17.3	
335 i xDrive	09/08→12/11	225 / 306			98035500	L850	→03/10			98031300	L1093	→03/10
335 xi	09/07→12/11	225 / 306			98044300	L865	03/10→			98043900	L1110	03/10→
			Ate		82072000			Ate		82057500		
				PRO	92155303	ø 348 x 30 x 73.2		Ate		82062900		
					TPM0003				PRO	92137903	ø 336 x 22 x 67	
										TPM0003		
										91049300	ø 185 x 20	
										97003100		
60900			Ate		2331303	[–] 23313 20.3		Ate		2355001	[o] 23550 17.3	
335 xi	09/07→12/08	224 / 305	Ate	epad	2331382	[o] 23313 20.3		Ate	epad	2355081	[o] 23550 17.3	
					98035500	L850	left			98031300	L1093	
			Ate		82072000			Ate		82057500		
				PRO	92155303	ø 348 x 30 x 73.2			PRO	92137903	ø 336 x 22 x 67	
					TPM0003					TPM0003		
										91049300	ø 185 x 20	
										97003100		
61000			Ate		2331207	[o] 23312 20.3		Ate		2373001	[o] 23730 17.3	
M3 4.0	03/07→12/11	309 / 420	Ate	epad	2331281	[o] 23312 20.3		Ate	epad	2373081	[o] 23730 17.3	
					98041400	L675	left			98031300	L1093	
					98041500	L690	right	Ate		82057500		
			Ate		82062900			Ate		82062900		
			Ate		82072000					TPM0003		
					TPM0009					91049300	ø 185 x 20	
										97003100		
3 (F30, F35, F80) 10/11→07/13												
61100			Ate		2550601	[o] 25506 18.2	⊖ M-technology ⊖ perform. brk. sys.	Ate		2502902	[o] 25029 17	⊕ perform. brk. sys.
316 d	02/12→	85 / 116			98047500	L675		Ate		2530701	[o] 25307 17.2	⊖ perform. brk. sys.
316 i	10/12→	100 / 136	Ate		82062900					98047600	L1045	
318 d	02/12→	105 / 143		PRO	92238503	ø 300 x 22 x 73.2	⊖ M-technology ⊖ perform. brk. sys.	Ate		82062900		
320 d	10/11→	120 / 163			TPM0003					TPM0003		
										91053300	ø 160.5 x 20	
										97003100		
61200					98047500	L675		Ate		2502902	[o] 25029 17	⊕ M-technology
318 d	02/12→	100 / 136		PRO	92238503	ø 300 x 22 x 73.2	⊖ M-technology ⊖ perform. brk. sys.	Ate		2530701	[o] 25307 17.2	⊖ M-technology
					TPM0003					98047600	L1045	
										TPM0003		
										91053300	ø 160.5 x 20	
										97012600		
61300			Ate		2550601	[o] 25506 18.2	⊖ M-technology	Ate		2502902	[o] 25029 17	⊕ perform. brk. sys.
318 d xDrive	11/12→	105 / 143										

→

3 (F30, F35, F80) 10/11→07/13

61300 318 d xDrive	11/12→	105 / 143		98047500	L675	left	Ate	2530701	[o] 25307 17.2	⊖ perform. brk. sys.
			Ate	82062900				98047600	L1045	
			PRO	92238503	ø 300 x 22 x 73.2	⊖ M-technology ⊖ perform. brk. sys.	Ate	82062900		
				TPM0003			PRO	92239703	ø 300 x 20 x 66	⊖ M-technology ⊖ perform. brk. sys. →04/13
								TPM0003		
								91049300	ø 185 x 20	
								97003100		
61400 320 d	10/11→	135 / 184	Bos	2519901	[o] 25199 19.2	⊖ M-technology ⊖ perform. brk. sys.	Ate	2502902	[o] 25029 17	⊕ perform. brk. sys.
				98047500	L675		Ate	2530701	[o] 25307 17.2	⊖ perform. brk. sys.
			Ate	82517800		⊖ M-technology ⊖ perform. brk. sys.		98047600	L1045	
			PRO	92176103	ø 312 x 24 x 73.5	⊖ M-technology ⊖ perform. brk. sys.	Ate	82062900		
				TPM0003				TPM0003		
								91053300	ø 160.5 x 20	
								97012600		
61500 320 d	02/12→	147 / 200	Bos	2519901	[o] 25199 19.2	⊖ M-technology	Ate	2502902	[o] 25029 17	⊕ M-technology
				98047500	L675	left	Ate	2530701	[o] 25307 17.2	⊖ M-technology
			Ate	82517800		⊖ M-technology		98047600	L1045	
			PRO	92176103	ø 312 x 24 x 73.5	⊖ M-technology ⊖ perform. brk. sys.		TPM0003		
				TPM0003				91053300	ø 160.5 x 20	
								97012600		
61600 320 d xDrive	10/11→	135 / 184	Bos	2519901	[o] 25199 19.2	⊖ M-technology ⊖ perform. brk. sys.	Ate	2502902	[o] 25029 17	⊕ perform. brk. sys.
				98047500	L675	left	Ate	2530701	[o] 25307 17.2	⊖ perform. brk. sys.
			Ate	82517800		⊖ M-technology ⊖ perform. brk. sys.		98047600	L1045	
			PRO	92176103	ø 312 x 24 x 73.5	⊖ M-technology ⊖ perform. brk. sys.	Ate	82062900		
				TPM0003			PRO	92239703	ø 300 x 20 x 66	⊖ M-technology ⊖ perform. brk. sys.
								TPM0003		
61700 320 d xDrive	05/12→	120 / 163	Bos	2519901	[o] 25199 19.2	⊖ M-technology	Ate	2502902	[o] 25029 17	⊕ M-technology
				98047500	L675		Ate	2530701	[o] 25307 17.2	⊖ M-technology
			Ate	82517800		⊖ M-technology		98047600	L1045	
			PRO	92176103	ø 312 x 24 x 73.5	⊖ M-technology ⊖ perform. brk. sys.		TPM0003		
				TPM0003				91049300	ø 185 x 20	
								97003100		
61800 320 d xDrive	05/12→	147 / 200	Bos	2519901	[o] 25199 19.2	⊖ M-technology	Ate	2502902	[o] 25029 17	⊕ M-technology
				98047500	L675	left	Ate	2530701	[o] 25307 17.2	⊖ M-technology
			Ate	82517800		⊖ M-technology ⊖ KP ⊖ KR		98047600	L1045	
			PRO	92176103	ø 312 x 24 x 73.5	⊖ M-technology ⊖ perform. brk. sys.	PRO	92239703	ø 300 x 20 x 66	⊖ M-technology ⊖ perform. brk. sys. →04/13
				TPM0003				TPM0003		
								91049300	ø 185 x 20	
								97003100		
61900 320 i	02/12→	125 / 170	Bos	2519901	[o] 25199 19.2	⊕ cruise control →07/13	Ate	2502902	[o] 25029 17	⊕ perform. brk. sys.

BMW

BMW

kW / hp

3 (F30, F35, F80) 10/11→07/13

61900														
320 i	02/12→	125 / 170	Ate		2550601	[o] 25506 18.2	⊖ M-technology		Ate		2530701	[o] 25307 17.2	⊖ perform. brk. sys.
					98047500	L675	left				98047600	L1045	
			Ate		82062900		⊖ M-technology		Ate		82062900		
			Ate		82517800		⊕ cruise control →07/13				TPM0003		
				PRO	92176103	ø 312 x 24 x 73.5	⊕ cruise control ⊖ perform. brk. sys.				91053300	ø 160.5 x 20	
				PRO	92238503	ø 300 x 22 x 73.2	⊖ M-technology ⊖ perform. brk. sys.				97012600		
					TPM0003								
62000														
320 i	02/12→	135 / 184	Bos		2519901	[o] 25199 19.2	⊕ USA		Ate		2502902	[o] 25029 17	⊕ perform. brk. sys.
			Ate		2550601	[o] 25506 18.2	⊖ M-technology		Ate		2530701	[o] 25307 17.2	⊖ perform. brk. sys.
					98047500	L675					98047600	L1045	
			Ate		82062900		⊖ M-technology		Ate		82062900		
				PRO	92238503	ø 300 x 22 x 73.2	⊖ M-technology				TPM0003		
					TPM0003						91053300	ø 160.5 x 20	
											97012600		
62100														
320 i	09/12→	134 / 182	Bos		2519901	[o] 25199 19.2			Ate		2530701	[o] 25307 17.2	
					98047500	L675					98047600	L1045	
			Ate		82517800						TPM0003		
					TPM0003						91053300	ø 160.5 x 20	
											97012600		
62200														
320 i xDrive	11/11→	135 / 184	Bos		2519901	[o] 25199 19.2	⊖ cruise control ⊖ M-technology		Ate		2502902	[o] 25029 17	⊕ perform. brk. sys.
			Ate		2550601	[o] 25506 18.2	⊖ J ⊕ cruise control		Ate		2530701	[o] 25307 17.2	⊖ perform. brk. sys.
					98047500	L675	left				98047600	L1045	
			Ate		82062900		⊖ M-technology		Ate		82062900		
			Ate		82517800		⊖ cruise control ⊖ M-technology			PRO	92239703	ø 300 x 20 x 66	⊖ M-technology
				PRO	92176103	ø 312 x 24 x 73.5	⊕ J 03/12→ ⊕ M-technology RHD				TPM0003		
				PRO	92238503	ø 300 x 22 x 73.2	⊕ cruise control →03/12 ⊕ M-technology RHD				91049300	ø 185 x 20	
					TPM0003						97003100		
62300														
320 i xDrive	09/12→	134 / 182	Bos		2519901	[o] 25199 19.2			Ate		2530701	[o] 25307 17.2	
					98047500	L675					98047600	L1045	
			Ate		82517800					PRO	92239703	ø 300 x 20 x 66	→04/13
					TPM0003						TPM0003		
											91049300	ø 185 x 20	
											97003100		
62400														
325 d	10/11→	160 / 218	Bos		2519901	[o] 25199 19.2	⊖ M-technology		Ate		2502902	[o] 25029 17	⊕ perform. brk. sys.
					98047500	L675	left		Ate		2530701	[o] 25307 17.2	⊖ perform. brk. sys.
			Ate		82517800		⊖ M-technology				98047600	L1045	
				PRO	92242003	ø 330 x 24 x 73.2	⊖ M-technology ⊖ perform. brk. sys.		Ate		82062900		
					TPM0003						TPM0003		
											91053300	ø 160.5 x 20	
											97012600		

→

3 (F30, F35, F80) 10/11→07/13

328 i	10/11→	62500 180 / 245	Bos	2519901	[o] 25199 19.2	⊖ M-technology ⊖ perform. brk. sys.	Ate	2502902	[o] 25029 17	⊕ perform. brk. sys.
				98047500	L675		Ate	2530701	[o] 25307 17.2	⊖ perform. brk. sys.
			Ate	82517800		⊖ M-technology ⊖ perform. brk. sys.		98047600	L1045	
				92242003	ø 330 x 24 x 73.2	⊖ M-technology ⊖ perform. brk. sys.	Ate	82062900		
				TPM0003				92239703	ø 300 x 20 x 66	⊖ M-technology ⊖ perform. brk. sys.
								TPM0003		
								91049300	ø 185 x 20	
								97012600		
328 i Flex	08/14→	62600 180 / 245	Bos	2519901	[o] 25199 19.2	⊖ M-technology	Ate	2502902	[o] 25029 17	⊕ M-technology
				98047500	L675	left	Ate	2530701	[o] 25307 17.2	⊖ M-technology
			Ate	82517800		⊖ M-technology		98047600	L1045	
				92242003	ø 330 x 24 x 73.2	⊖ M-technology ⊖ perform. brk. sys.		TPM0003		
				TPM0003				91049300	ø 185 x 20	
								97003100		
328 i xDrive	10/11→	62700 180 / 245	Bos	2519901	[o] 25199 19.2	⊖ M-technology ⊖ perform. brk. sys.	Ate	2502902	[o] 25029 17	⊕ perform. brk. sys.
				98047500	L675	left	Ate	2530701	[o] 25307 17.2	⊖ perform. brk. sys.
			Ate	82517800		⊖ M-technology ⊖ perform. brk. sys.		98047600	L1045	
				92242003	ø 330 x 24 x 73.2	⊖ M-technology ⊖ perform. brk. sys.	Ate	82062900		
				TPM0003				92239703	ø 300 x 20 x 66	⊖ M-technology ⊖ perform. brk. sys.
								TPM0003		
330 d 330 d xDrive	01/12→ 03/13→	62800 190 / 258 190 / 258	Bos	2519901	[o] 25199 19.2	⊖ M-technology	Ate	2502902	[o] 25029 17	⊕ M-technology
				98047500	L675	left	Ate	2551401	[o] 25514 18.3	⊖ M-technology
			Ate	82517800		⊖ M-technology		98047600	L1045	
				92242003	ø 330 x 24 x 73.2	⊖ M-technology ⊖ perform. brk. sys.	Ate	82062900		
				TPM0003				92241903	ø 330 x 20 x 66.2	⊖ M-technology ⊖ perform. brk. sys. →04/13
								TPM0003		
								91049300	ø 185 x 20	
								97003100		
335 d xDrive	07/13→	62900 230 / 313		98047500	L675	left	Ate	2502902	[o] 25029 17	⊕ M-technology
				TPM0003			Ate	2551401	[o] 25514 18.3	⊖ M-technology ⊖ perform. brk. sys.
								98047600	L1045	
								TPM0003		
								91049300	ø 185 x 20	
								97003100		
335 i	10/11→	63000 225 / 306	Bos	2519901	[o] 25199 19.2	⊕ USA ⊖ M-technology	Ate	2502902	[o] 25029 17	⊕ perform. brk. sys.
				98047500	L675		Ate	2551401	[o] 25514 18.3	⊖ M-technology ⊖ perform. brk. sys.
				TPM0003				98047600	L1045	
							Ate	82062900		
								92241903	ø 330 x 20 x 66.2	⊖ M-technology ⊖ perform. brk. sys.
								TPM0003		

BMW

BMW

		kW / hp											
3 (F30, F35, F80) 10/11→07/13													
63000													
335 i	10/11→	225 / 306								91049300	ø 185 x 20	
										97003100		
63100				98047500	L675	left	Ate		2502902	[o] 25029 17	⊕ M-technology
335 i	10/11→07/13	240 / 326		TPM0003			Ate		2530701	[o] 25307 17.2	⊖ M-technology ⊕ J
							Ate		2551401	[o] 25514 18.3	⊖ M-technology
									98047600	L1045	
								PRO	92241903	ø 330 x 20 x 66.2	⊖ M-technology ⊖ perform. brk. sys.
									TPM0003		
									91049300	ø 185 x 20	
									97003100		
63200				98047500	L675	left	Ate		2502902	[o] 25029 17	⊕ M-technology
335 i	07/13→	250 / 340									
335 i xDrive	10/11→07/13	240 / 326		TPM0003			Ate		2551401	[o] 25514 18.3	⊖ M-technology
335 i xDrive	07/13→	250 / 340							98047600	L1045	
								PRO	92241903	ø 330 x 20 x 66.2	⊖ M-technology ⊖ perform. brk. sys.
									TPM0003		
									91049300	ø 185 x 20	
									97003100		
63300			Bos	2519901	[o] 25199 19.2	⊕ USA ⊖ M-technology	Ate		2502902	[o] 25029 17	⊕ perform. brk. sys.
335 i xDrive	10/11→	225 / 306		98047500	L675	left	Ate		2551401	[o] 25514 18.3	⊖ M-technology ⊖ perform. brk. sys.
				TPM0003					98047600	L1045	
							Ate		82062900		
								PRO	92241903	ø 330 x 20 x 66.2	⊖ M-technology ⊖ perform. brk. sys.
									TPM0003		
63400				98047500	L675	left	Ate		2502902	[o] 25029 17	⊕ perform. brk. sys.
ActiveHybrid	01/12→	250 / 340		TPM0003			Ate		2551401	[o] 25514 18.3	⊖ M-technology ⊖ perform. brk. sys.
									98047600	L1045	
							Ate		82062900		
								PRO	92241903	ø 330 x 20 x 66.2	⊖ M-technology ⊖ perform. brk. sys.
									TPM0003		
63500				98047500	L675	left	Ate		2502902	[o] 25029 17	⊕ M-technology ⊕ perform. brk. sys.
ActiveHybrid	07/12→	225 / 306		TPM0003			Ate		2551401	[o] 25514 18.3	⊖ M-technology ⊖ perform. brk. sys.
									98047600	L1045	
							Ate		82062900		
								PRO	92241903	ø 330 x 20 x 66.2	⊖ M-technology ⊖ perform. brk. sys.
									TPM0003		
63600				98047500	L675	left			98047600	L1045	⊖ ceramic brake
M3	01/14→	317 / 431		TPM0003					TPM0003		
									91049300	ø 185 x 20	
									97003100		
3 Cabriolet (E36) 12/93→12/99 → 3 Convertible (E36), Page 116													

30 kW / hp

3 Cabriolet (E46) 04/00→12/07 → 3 Convertible (E46), Page 117
3 Cabriolet (E93) 10/06→12/13 → 3 Convertible (E93), Page 119
3 Compact (E36) 03/94→08/00

316 g 316 i 318 tds	03/94→08/00 03/94→08/00 01/95→08/00	63700 75 / 102 75 / 102 66 / 90	Ate		2328702	[o] 23287 17.8		Ate		2160702	[o] 21607 17.3	⊕ rear disc brake
			Ate	epad	2328781	[o] 23287 17.8		Ate	epad	2160781	[o] 21607 17.3	⊕ rear disc brake
					98013300	L776				98020800	L840	
			Ate		82030500			Ate		82028700		
			Ate		82062900			Ate		82062900		
				PRO	92055503	ø 286 x 12 x 51.7				91044000	ø 228.6 x 41.5	⊕ rear drum brake
					TPM0003			Luc		97008000		
										83044000	bore ø 22.2 ø 228.6 x 41.5	⊕ rear drum brake
									PRO	92072303	ø 272 x 10 x 78	⊕ rear disc brake
										TPM0003		
										94012500	ø 228,5 x 47	⊕ rear drum brake
										91045500	ø 160.5 x 25	
										97008100		
316 i	12/98→08/00	63800 77 / 105	Ate		2328702	[o] 23287 17.8		Ate		2160702	[o] 21607 17.3	
			Ate	epad	2328781	[o] 23287 17.8		Ate	epad	2160781	[o] 21607 17.3	
					98013300	L776				98020800	L840	
			Ate		82030500			Ate		82028700		
			Ate		82062900			Ate		82062900		
				PRO	92055503	ø 286 x 12 x 51.7			PRO	92072303	ø 272 x 10 x 78	
					TPM0003					TPM0003		
										91045500	ø 160.5 x 25	
										97008100		
318 ti	07/95→08/00	63900 103 / 140	Ate		2328702	[o] 23287 17.8		Ate		2160702	[o] 21607 17.3	
			Ate	epad	2328781	[o] 23287 17.8		Ate	epad	2160781	[o] 21607 17.3	
					98013300	L776				98020800	L840	
			Ate		82030500			Ate		82028700		
			Ate		82062900			Ate		82062900		
				PRO	92055503	ø 286 x 12 x 51.7	→03/98		PRO	92072303	ø 272 x 10 x 78	
				PRO	92055603	ø 286 x 22 x 51.7	04/98→			TPM0003		
				PRO	92055605	ø 286 x 22 x 51.7	04/98→			91045500	ø 160.5 x 25	
					TPM0003					97008100		
323 ti	08/97→08/00	64000 125 / 170	Ate		2328702	[o] 23287 17.8		Ate		2160702	[o] 21607 17.3	
			Ate	epad	2328781	[o] 23287 17.8		Ate	epad	2160781	[o] 21607 17.3	
					98013300	L776				98020800	L840	
			Ate		82030500			Ate		82028700		
			Ate		82062900			Ate		82062900		
				PRO	92055603	ø 286 x 22 x 51.7			PRO	92072303	ø 272 x 10 x 78	
				PRO	92055605	ø 286 x 22 x 51.7				TPM0003		

BMW

BMW

30 kW / hp

3 Compact (E36) 03/94→08/00

323 ti	08/97→08/00	64000 125 / 170			TPM0003					91045500	ø 160.5 x 25
										97008100	

3 Compact (E46) 06/01→02/05

316 ti 316 ti 316 ti	06/01→02/05 06/02→02/05 06/02→02/05	64100 85 / 115 77 / 105 85 / 115	Ate		2328702	[o] 23287 17.8		Ate		2193402	[o] 21934 17.3
			Ate	epad	2328781	[o] 23287 17.8		Ate	epad	2193481	[o] 21934 17.3
					98023900	L596				98024000	L1338
			Ate		82039300			Ate		82028700	
			Ate		82062900			Ate		82062900	
				PRO	92055603	ø 286 x 22 x 51.7			PRO	92055703	ø 280 x 10 x 60.1
				PRO	92055605	ø 286 x 22 x 51.7				TPM0003	
					TPM0003					91053300	ø 160.5 x 20
										97012600	
318 td 318 ti	03/03→02/05 09/01→02/05	64200 85 / 115 105 / 143	Ate		2328702	[o] 23287 17.8		Ate		2193402	[o] 21934 17.3
			Ate	epad	2328781	[o] 23287 17.8		Ate	epad	2193481	[o] 21934 17.3
					98023900	L596				98024000	L1338
			Ate		82039300			Ate		82028700	
			Ate		82062900			Ate		82062900	
				PRO	92055603	ø 286 x 22 x 51.7			PRO	92072403	ø 276 x 19 x 60.1
				PRO	92055605	ø 286 x 22 x 51.7				TPM0003	
					TPM0003					91053300	ø 160.5 x 20
										97012600	
320 td 320 td 325 ti	09/01→02/05 10/01→12/02 06/01→02/05	64300 110 / 150 100 / 136 141 / 192	Ate		2328702	[o] 23287 17.8		Ate		2193402	[o] 21934 17.3
			Ate	epad	2328781	[o] 23287 17.8		Ate	epad	2193481	[o] 21934 17.3
					98023900	L596				98024000	L1338
			Ate		82039300			Ate		82028700	
			Ate		82062900			Ate		82062900	
				PRO	92097203	ø 300 x 22 x 51.5			PRO	92097303	ø 294 x 19 x 59.2
				PRO	92097205	ø 300 x 22 x 51.5				TPM0003	
					TPM0003					91053300	ø 160.5 x 20
										97012600	

3 Convertible (E36) 12/93→12/99

318 i	01/94→04/99	64400 85 / 115	Ate		2328702	[o] 23287 17.8		Ate		2160702	[o] 21607 17.3
			Ate	epad	2328781	[o] 23287 17.8		Ate	epad	2160781	[o] 21607 17.3
					98013300	L776				98013400	L790
			Ate		82030500			Ate		82028700	
			Ate		82062900			Ate		82062900	
				PRO	92055503	ø 286 x 12 x 51.7			PRO	92055703	ø 280 x 10 x 60.1
					TPM0003					TPM0003	
										91045500	ø 160.5 x 25
										97008100	

→

3 Convertible (E36) 12/93→12/99

		64500	Ate	2328702	[o] 23287 17.8		Ate	2160702	[o] 21607 17.3	
318 i	09/95→04/99	103 / 140	Ate	2328781	[o] 23287 17.8		Ate	2160781	[o] 21607 17.3	
320 i	12/93→04/99	110 / 150		98013300	L776			98013400	L790	
			Ate	82030500			Ate	82028700		
			Ate	82062900			Ate	82062900		
				92055603	ø 286 x 22 x 51.7			92055703	ø 280 x 10 x 60.1	
				92055605	ø 286 x 22 x 51.7			TPM0003		
				TPM0003				91045500	ø 160.5 x 25	
								97008100		
		64600	Ate	2328702	[o] 23287 17.8		Ate	2160702	[o] 21607 17.3	
323 i	06/95→04/99	125 / 170	Ate	2328781	[o] 23287 17.8		Ate	2160781	[o] 21607 17.3	
328 i	03/95→04/99	142 / 193		98013300	L776			98013400	L790	
			Ate	82030500			Ate	82028700		
			Ate	82062900			Ate	82062900		
				92055603	ø 286 x 22 x 51.7			92072403	ø 276 x 19 x 60.1	
				92055605	ø 286 x 22 x 51.7			TPM0003		
				TPM0003				91045500	ø 160.5 x 25	
								97008100		
		64700	Ate	2347402	[o] 23474 20.3		Ate	2099501	[o] 20995 17.3	
M3 3.2	10/95→04/99	236 / 321		98019500	L810			98013400	L790	
M3 3.2	09/97→12/99	179 / 243	Ate	82030500			Ate	82028700		
			Ate	82062900			Ate	82062900		
				92071100	ø 315 x 28 x 52.5	left		92098703	ø 312 x 20 x 61	left
				92071200	ø 315 x 28 x 52.5	right		92098803	ø 312 x 20 x 61	right
				92071103	ø 315 x 28 x 52.5	left		TPM0003		
				92071203	ø 315 x 28 x 52.5	right		91033400	ø 180 x 25	
				TPM0003				97008100		

3 Convertible (E46) 04/00→12/07

		64800	Ate	2328702	[o] 23287 17.8		Ate	2193402	[o] 21934 17.3	
318 Ci	09/01→	105 / 143	Ate	2328781	[o] 23287 17.8		Ate	2193481	[o] 21934 17.3	
318 Ci	02/05→	110 / 150		98023900	L596			98024000	L1338	
			Ate	82039300			Ate	82028700		
			Ate	82062900			Ate	82062900		
				92055603	ø 286 x 22 x 51.7			92072403	ø 276 x 19 x 60.1	
				92055605	ø 286 x 22 x 51.7			TPM0003		
				TPM0003				91053300	ø 160.5 x 20	
								97012600		
		64900	Ate	2328702	[o] 23287 17.8		Ate	2193402	[o] 21934 17.3	
320 Cd	02/05→	110 / 150	Ate	2328781	[o] 23287 17.8		Ate	2193481	[o] 21934 17.3	
323 Ci	04/00→09/00	125 / 170		98023900	L596			98024000	L1338	
325 Ci	09/00→	141 / 192								

BMW

BMW

30 kW / hp

3 Convertible (E46) 04/00→12/07

64900													
320 Cd	02/05→	110 / 150	Ate		82039300				Ate		82028700		
323 Ci	04/00→09/00	125 / 170	Ate		82062900				Ate		82062900		
325 Ci	09/00→	141 / 192		PRO	92097203	ø 300 x 22 x 51.5				PRO	92097303	ø 294 x 19 x 59.2	
				PRO	92097205	ø 300 x 22 x 51.5					TPM0003		
					TPM0003						91053300	ø 160.5 x 20	
											97012600		
65000			Ate		2328702	[o] 23287 17.8			Ate		2193402	[o] 21934 17.3	
320 Ci	09/00→	125 / 170	Ate	epad	2328781	[o] 23287 17.8			Ate	epad	2193481	[o] 21934 17.3	
					98023900	L596					98024000	L1338	
			Ate		82039300				Ate		82028700		
			Ate		82062900				Ate		82062900		
				PRO	92097203	ø 300 x 22 x 51.5				PRO	92097303	ø 294 x 19 x 59.2	
				PRO	92097205	ø 300 x 22 x 51.5					TPM0003		
					TPM0003						91053300	ø 160.5 x 20	
					91053300	ø 160.5 x 20					97012600		
65100			Ate		2328702	[o] 23287 17.8			Ate		2193402	[o] 21934 17.3	
320 Ci	01/06→12/07	120 / 163	Ate	epad	2328781	[o] 23287 17.8			Ate	epad	2193481	[o] 21934 17.3	
					98023900	L596					98024000	L1338	
			Ate		82039300				Ate		82028700		
				PRO	92097203	ø 300 x 22 x 51.5				PRO	92097303	ø 294 x 19 x 59.2	
				PRO	92097205	ø 300 x 22 x 51.5					TPM0003		
					TPM0003						91053300	ø 160.5 x 20	
											97012600		
65200			Ate		2328702	[o] 23287 17.8			Ate		2193402	[o] 21934 17.3	
325 Ci	09/00→12/06	137 / 186	Ate	epad	2328781	[o] 23287 17.8			Ate	epad	2193481	[o] 21934 17.3	
					98023900	L596					98024000	L1338	
			Ate		82039300				Ate		82028700		
			Ate		82062900				Ate		82062900		
				PRO	92097203	ø 300 x 22 x 51.5				PRO	92097303	ø 294 x 19 x 59.2	
				PRO	92097205	ø 300 x 22 x 51.5					TPM0003		
					TPM0003						91049300	ø 185 x 20	
											97003100		
65300			Ate		2318302	[o] 23183 20.3			Ate		2148703	[o] 21487 17.2	
330 Cd	08/05→	150 / 204	Ate	epad	2318381	[o] 23183 20.3					98024000	L1338	
330 Ci	06/00→	170 / 231			98026900	L650			Ate		82062900		
			Ate		82028600					PRO	92107003	ø 320 x 22 x 60.5	
			Ate		82062900						TPM0003		
					92106900	ø 325 x 25 x 52.5					91049300	ø 185 x 20	
				PRO	92106903	ø 325 x 25 x 52.5					97003100		
				PRO	92106905	ø 325 x 25 x 52.5							

→

3 Convertible (E46) 04/00→12/07

330 Cd 330 Ci	08/05→ 06/00→	65300 150 / 204 170 / 231			TPM0003						
330 Ci	06/00→12/06	65400 168 / 228	Ate		2318302	[o] 23183 20.3		Ate		2148703	[o] 21487 17.2
			Ate	epad	2318381	[o] 23183 20.3				98024000	L1338
					98026900	L650		Ate		82057500	
			Ate		82028600				PRO	92107003	ø 320 x 22 x 60.5
					92106900	ø 325 x 25 x 52.5				TPM0003	
				PRO	92106903	ø 325 x 25 x 52.5				91049300	ø 185 x 20
				PRO	92106905	ø 325 x 25 x 52.5				97003100	
					TPM0003						
M3 3.2	09/00→12/06	65500 235 / 320	Ate		2347402	[o] 23474 20.3		Ate		2099501	[o] 20995 17.3
					98019500	L810				98013400	L790
			Ate		82030500			Ate		82028700	
			Ate		82062900			Ate		82062900	
					92071100	ø 315 x 28 x 52.5	left		PRO	92098703	ø 312 x 20 x 61	left
					92071200	ø 315 x 28 x 52.5	right		PRO	92098803	ø 312 x 20 x 61	right
				PRO	92071103	ø 315 x 28 x 52.5	left			TPM0003	
				PRO	92071203	ø 315 x 28 x 52.5	right			91033400	ø 180 x 25
					TPM0003					97008100	
M3 3.2	04/01→	65600 252 / 343	Ate		2347402	[o] 23474 20.3		Ate		2148701	[o] 21487 17.2
					98026900	L650		Ate	epad	2148781	[o] 21487 17.2
			Ate		82028600					98027300	L1350
			Ate		82062900			Ate		82062900	
					TPM0009					TPM0003	
										91058700	ø 185 x 30
										97032200	

3 Convertible (E93) 10/06→12/13

318 i	03/10→	65700 105 / 143	Ate		2409601	[o] 24096 20.3	⊖ M-technology	Ate		2392701	[o] 23927 17.3
			Ate	epad	2409681	[o] 24096 20.3	⊖ M-technology	Ate	epad	2392781	[o] 23927 17.3
			Bre		2431601	[o] 24316 17	⊕ M-technology			98043900	L1110
					98043700	L650	⊖ M-technology	Ate		82028700	
					98046000	L695	⊕ M-technology	Ate		82062900	
			Bre		82504600		⊕ M-technology		PRO	92133003	ø 300 x 20 x 66.1
			Ate		82062900		⊖ M-technology			TPM0003	
			Ate		82074500		⊖ M-technology			91053300	ø 160.5 x 20
				PRO	92137703	ø 300 x 24 x 73.5	⊖ M-technology			97012600	
					TPM0003						
320 d	03/07→	65800 130 / 177	Ate		2331301	[o] 23313 20.3	⊖ M-technology	Ate		2392701	[o] 23927 17.3	⊖ M-technology ⊕ M-technology 09/09→
			Ate	epad	2331381	[o] 23313 20.3	⊖ M-technology	Ate	epad	2392781	[o] 23927 17.3	⊖ M-technology ⊕ M-technology 09/09→
			Bre		2431601	[o] 24316 17	⊕ M-technology	Bre		2431501	[o] 24315 16.9	⊕ M-technology →09/09
					98043800	L723	⊖ M-technology			98031300	L1093	→03/10

BMW

BMW

		kW / hp									
3 Convertible (E93) 10/06→12/13											
65800				98046000	L695	⊕ M-technology		98043900	L1110	03/10→
320 d	03/07→	130 / 177	Bre	82504600		⊕ M-technology	Bre	82504500		⊕ M-technology →09/09
			Ate	82062900		⊖ M-technology	Ate	82028700		⊖ M-technology ⊕ M-technology 09/09→
			Ate	82074500		⊖ M-technology	Ate	82062900		⊖ M-technology ⊕ M-technology 09/09→
				92176103	ø 312 x 24 x 73.5	⊖ M-technology		92133003	ø 300 x 20 x 66.1	09/09→ ⊕ M-technology
								92154903	ø 300 x 20 x 66	⊖ M-technology
				TPM0003				TPM0003		
								91049300	ø 185 x 20	⊖ M-technology
								91053300	ø 160.5 x 20	⊕ M-technology
								97003100		⊖ M-technology
								97012600		⊕ M-technology
65900			Ate	2331301	[o] 23313 20.3	⊖ M-technology	Ate	2392701	[o] 23927 17.3	⊖ M-technology ⊕ M-technology 09/09→
320 d	01/08→	120 / 163	Ate	2331381	[o] 23313 20.3	⊖ M-technology	Ate	2392781	[o] 23927 17.3	⊖ M-technology ⊕ M-technology 09/09→
			Bre	2431601	[o] 24316 17	⊕ M-technology	Bre	2431501	[o] 24315 16.9	⊕ M-technology →09/09
				98043800	L723	⊖ M-technology 03/10→		98031300	L1093	→03/10 ⊖ M-technology ⊕ M-technology
				98046000	L695	⊖ M-technology →03/10 ⊕ M-technology		98043900	L1110	03/10→ ⊖ M-technology →09/09 ⊕ M-technology
			Bre	82504600		⊕ M-technology	Bre	82504500		⊕ M-technology →09/09
			Ate	82074500		⊖ M-technology	Ate	82028700		⊖ M-technology ⊕ M-technology 09/09→
				92176103	ø 312 x 24 x 73.5	⊖ M-technology		92133003	ø 300 x 20 x 66.1	09/09→ ⊕ M-technology
				TPM0003				92154903	ø 300 x 20 x 66	⊖ M-technology
								TPM0003		
								91049300	ø 185 x 20	
								97003100		
66000			Ate	2331301	[o] 23313 20.3	⊖ M-technology	Ate	2392701	[o] 23927 17.3	
320 d	01/10→	135 / 184	Ate	2331381	[o] 23313 20.3	⊖ M-technology	Ate	2392781	[o] 23927 17.3	
			Bre	2431601	[o] 24316 17	⊕ M-technology		98031300	L1093	→03/10
				98043800	L723	⊖ M-technology		98043900	L1110	03/10→
				98046000	L695	⊕ M-technology	Ate	82028700		⊖ M-technology
			Bre	82504600		⊕ M-technology	Ate	82062900		
			Ate	82062900		⊖ M-technology		92133003	ø 300 x 20 x 66.1	⊕ M-technology
			Ate	82074500		⊖ M-technology		92154903	ø 300 x 20 x 66	⊖ M-technology
				92176103	ø 312 x 24 x 73.5	⊖ M-technology		TPM0003		
				TPM0003				91049300	ø 185 x 20	⊖ M-technology
								91053300	ø 160.5 x 20	⊕ M-technology
								97003100		⊖ M-technology
								97012600		⊕ M-technology
66100			Ate	2331301	[o] 23313 20.3	⊖ M-technology →04/08	Ate	2392701	[o] 23927 17.3	
320 i	01/07→	120 / 163								
320 i	03/07→	115 / 156								
320 i	03/07→	125 / 170	Ate	2331381	[o] 23313 20.3	⊖ M-technology →04/08	Ate	2392781	[o] 23927 17.3	
			Ate	2379401	[o] 23794 20.3	⊖ M-technology		98031300	L1093	→03/10
			Ate	2379481	[o] 23794 20.3	⊖ M-technology		98043900	L1110	03/10→

→

kW / hp

3 Convertible (E93) 10/06→12/13

66100													
320 i	01/07→	120 / 163	Ate		2409601	[o] 24096 20.3	⊖ M-technology 04/08→	Ate		82028700			
320 i	03/07→	115 / 156											
320 i	03/07→	125 / 170	Ate	epad	2409681	[o] 24096 20.3	⊖ M-technology 04/08→	Ate		82062900			
			Bre		2431601	[o] 24316 17	⊕ M-technology		PRO	92133003	ø 300 x 20 x 66.1	⊕ M-technology	
					98031200	L635	⊖ M-technology →03/10		PRO	92154903	ø 300 x 20 x 66	⊖ M-technology	
					98043800	L723	⊖ M-technology 03/10→			TPM0003			
					98046000	L695	⊕ M-technology			91049300	ø 185 x 20	⊖ M-technology	
			Bre		82504600		⊕ M-technology			91053300	ø 160.5 x 20	⊕ M-technology	
			Ate		82062900		⊖ M-technology			97003100		⊖ M-technology	
			Ate		82074500		→04/08 ⊖ M-technology			97012600		⊕ M-technology	
				PRO	92137703	ø 300 x 24 x 73.5	⊖ M-technology 04/08→						
				PRO	92176103	ø 312 x 24 x 73.5	⊖ M-technology →04/08						
					TPM0003								
66200													
320 i	03/07→08/07	110 / 149	Ate		2331301	[o] 23313 20.3	⊖ M-technology	Ate		2392701	[o] 23927 17.3		
			Ate	epad	2331381	[o] 23313 20.3	⊖ M-technology	Ate	epad	2392781	[o] 23927 17.3		
			Ate		2409601	[o] 24096 20.3	⊖ M-technology			98031300	L1093		
			Ate	epad	2409681	[o] 24096 20.3	⊖ M-technology	Ate		82028700			
			Bre		2431601	[o] 24316 17	⊕ M-technology	Ate		82062900			
					98031200	L635	⊖ M-technology		PRO	92154903	ø 300 x 20 x 66	⊖ M-technology	
					98046000	L695	⊕ M-technology			TPM0003			
			Bre		82504600		⊕ M-technology			91049300	ø 185 x 20		
			Ate		82062900		⊖ M-technology			97003100			
			Ate		82074500		⊖ M-technology						
				PRO	92176103	ø 312 x 24 x 73.5	⊖ M-technology						
					TPM0003								
66300													
323 i	03/07→	130 / 177	Ate		2331301	[o] 23313 20.3	⊖ M-technology	Ate		2392701	[o] 23927 17.3	⊖ M-technology	
			Ate	epad	2331381	[o] 23313 20.3	⊖ M-technology	Ate	epad	2392781	[o] 23927 17.3	⊖ M-technology	
			Bre		2431601	[o] 24316 17	⊕ M-technology	Bre		2431501	[o] 24315 16.9	⊕ M-technology	
					98031200	L635	⊖ M-technology →03/10			98031300	L1093	→03/10	
					98043800	L723	⊖ M-technology 03/10→			98043900	L1110	03/10→	
					98046000	L695	⊕ M-technology	Bre		82504500		⊕ M-technology	
			Bre		82504600		⊕ M-technology	Ate		82028700		⊖ M-technology	
			Ate		82062900		⊖ M-technology	Ate		82062900		⊖ M-technology	
			Ate		82074500		⊖ M-technology		PRO	92154903	ø 300 x 20 x 66		
				PRO	92176103	ø 312 x 24 x 73.5	⊖ M-technology			TPM0003			
					TPM0003					91049300	ø 185 x 20		
										97003100			
66400													
325 d	01/07→12/09	155 / 211	Ate		2379401	[o] 23794 20.3	⊖ M-technology	Ate		2355001	[o] 23550 17.3	⊖ M-technology	
			Ate	epad	2379481	[o] 23794 20.3	⊖ M-technology	Ate	epad	2355081	[o] 23550 17.3	⊖ M-technology	
			Bre		2431601	[o] 24316 17	⊕ M-technology	Bre		2431501	[o] 24315 16.9	⊕ M-technology	
					98031200	L635	⊖ M-technology			98031300	L1093		

BMW

BMW

30 kW / hp

3 Convertible (E93) 10/06→12/13

66400													
325 d	01/07→12/09	155 / 211		98046000	L695	⊕ M-technology	Bre	82504500		⊕ M-technology
			Bre	82504600		⊕ M-technology	Ate	82057500		⊖ M-technology
			Ate	82074500		⊖ M-technology		92137903	ø 336 x 22 x 67	⊖ M-technology
				92137803	ø 330 x 24 x 73	⊖ M-technology		TPM0003		
				TPM0003				91049300	ø 185 x 20	
								97003100		
66500			Ate	2379401	[o] 23794 20.3	⊖ M-technology	Ate	2355001	[o] 23550 17.3	⊖ M-technology
325 d	03/07→	145 / 197								
330 i	03/07→	190 / 258	Ate	2379481 epad	[o] 23794 20.3	⊖ M-technology	Ate	2355081 epad	[o] 23550 17.3	⊖ M-technology
			Bre	2431601	[o] 24316 17	⊕ M-technology	Bre	2431501	[o] 24315 16.9	⊕ M-technology
				98031200	L635	⊖ M-technology →03/10		98031300	L1093	→03/10
				98043700	L650	03/10→ ⊖ M-technology		98043900	L1110	03/10→
				98046000	L695	⊕ M-technology	Bre	82504500		⊕ M-technology
			Bre	82504600		⊕ M-technology	Ate	82057500		⊖ M-technology
			Ate	82062900		⊖ M-technology	Ate	82062900		⊖ M-technology
			Ate	82074500		⊖ M-technology		92137903	ø 336 x 22 x 67	⊖ M-technology
				92137803	ø 330 x 24 x 73	⊖ M-technology		TPM0003		
				TPM0003				91049300	ø 185 x 20	
								97003100		
66600			Ate	2379401	[o] 23794 20.3	⊖ M-technology	Ate	2355001	[o] 23550 17.3	⊖ M-technology
325 d	02/10→	150 / 204								
			Ate	2379481 epad	[o] 23794 20.3	⊖ M-technology	Ate	2355081 epad	[o] 23550 17.3	⊖ M-technology
			Bre	2431601	[o] 24316 17	⊕ M-technology	Bre	2431501	[o] 24315 16.9	⊕ M-technology
				98043700	L650	⊖ M-technology		98043900	L1110	
				98046000	L695	⊕ M-technology	Bre	82504500		⊕ M-technology
			Bre	82504600		⊕ M-technology	Ate	82057500		⊖ M-technology
			Ate	82062900		⊖ M-technology	Ate	82062900		⊖ M-technology
			Ate	82074500		⊖ M-technology		92137903	ø 336 x 22 x 67	⊖ M-technology
				92137803	ø 330 x 24 x 73	⊖ M-technology		TPM0003		
				TPM0003				91049300	ø 185 x 20	
								97003100		
66700			Ate	2379401	[o] 23794 20.3	⊖ M-technology	Ate	2392701	[o] 23927 17.3	⊖ M-technology
325 i	10/06→	155 / 211								
			Ate	2379481 epad	[o] 23794 20.3	⊖ M-technology	Ate	2392781 epad	[o] 23927 17.3	⊖ M-technology
			Bre	2431601	[o] 24316 17	⊕ M-technology	Bre	2431501	[o] 24315 16.9	⊕ M-technology
				98031200	L635	⊖ M-technology →2010-03		98031300	L1093	⊖ M-technology →2010-03 ⊕ M-technology
				98043800	L723	⊖ M-technology 2010-03→		98043900	L1110	⊖ M-technology 2010-03→
				98046000	L695	⊕ M-technology	Bre	82504500		⊕ M-technology
			Bre	82504600		⊕ M-technology		92154903	ø 300 x 20 x 66	⊖ M-technology
			Ate	82074500		⊖ M-technology		TPM0003		
				92137803	ø 330 x 24 x 73	⊖ M-technology		91049300	ø 185 x 20	
				TPM0003				97003100		
66800			Ate	2379401	[o] 23794 20.3	⊖ M-technology	Ate	2392701	[o] 23927 17.3	⊖ M-technology
325 i	03/07→	160 / 218								
325 i	03/07→	160 / 218								

→

kW / hp

3 Convertible (E93) 10/06→12/13

66800													
325 i	03/07→	160 / 218	Ate		2379481	[o] 23794 20.3	⊖ M-technology	Ate		2392781	[o] 23927 17.3	⊖ M-technology
325 i	03/07→	160 / 218	Bre		2431601	[o] 24316 17	⊕ M-technology	Bre		2431501	[o] 24315 16.9	⊕ M-technology
					98031200	L635	⊖ M-technology →03/10			98031300	L1093	→03/10
					98043700	L650	03/10→ ⊖ M-technology			98043900	L1110	03/10→
					98046000	L695	⊕ M-technology	Bre		82504500		⊕ M-technology
			Bre		82504600		⊕ M-technology	Ate		82028700		
			Ate		82062900		⊖ M-technology	Ate		82057500		⊖ M-technology
			Ate		82074500		⊖ M-technology	Ate		82062900		⊖ M-technology
				PRO	92137803	ø 330 x 24 x 73	⊖ M-technology		PRO	92154903	ø 300 x 20 x 66	⊖ M-technology
					TPM0003					TPM0003		
										91053300	ø 160.5 x 20	
										97012600		
66900													
325 i	09/08→12/09	163 / 222	Ate		2379401	[o] 23794 20.3	⊖ M-technology	Ate		2392701	[o] 23927 17.3	⊖ M-technology
			Ate		2379481	[o] 23794 20.3	⊖ M-technology	Ate		2392781	[o] 23927 17.3	⊖ M-technology
			Bre		2431601	[o] 24316 17	⊕ M-technology	Bre		2431501	[o] 24315 16.9	⊕ M-technology
					98043700	L650	⊖ M-technology			98043900	L1110	
					98046000	L695	⊕ M-technology	Bre		82504500		⊕ M-technology
			Bre		82504600		⊕ M-technology	Ate		82028700		
			Ate		82062900		⊖ M-technology	Ate		82057500		⊖ M-technology
			Ate		82074500		⊖ M-technology	Ate		82062900		⊖ M-technology
				PRO	92137803	ø 330 x 24 x 73	⊖ M-technology		PRO	92154903	ø 300 x 20 x 66	⊖ M-technology
					TPM0003					TPM0003		
										91053300	ø 160.5 x 20	
										97012600		
67000													
328 i	03/07→	172 / 234	Ate		2331301	[o] 23313 20.3	⊖ M-technology	Ate		2392701	[o] 23927 17.3	⊖ M-technology
			Ate		2331381	[o] 23313 20.3	⊖ M-technology	Ate		2392781	[o] 23927 17.3	⊖ M-technology
			Bre		2431601	[o] 24316 17	⊕ M-technology	Bre		2431501	[o] 24315 16.9	⊕ M-technology
					98043800	L723	⊖ M-technology 03/10→			98031300	L1093	→03/10 ⊖ M-technology ⊕ M-technology
					98046000	L695	⊖ M-technology →03/10 ⊕ M-technology			98043900	L1110	⊖ M-technology 03/10→ ⊕ M-technology
			Bre		82504600		⊕ M-technology	Bre		82504500		⊕ M-technology
			Ate		82074500		⊖ M-technology	Ate		82028700		⊖ M-technology
				PRO	92176103	ø 312 x 24 x 73.5	⊖ M-technology		PRO	92154903	ø 300 x 20 x 66	⊖ M-technology
					TPM0003					TPM0003		
										91049300	ø 185 x 20	
										97003100		
67100													
328 i	09/11→12/13	179 / 243	Ate		2331301	[o] 23313 20.3		Ate		2392701	[o] 23927 17.3	
			Ate		2331381	[o] 23313 20.3		Ate		2392781	[o] 23927 17.3	
					98043800	L723				98043900	L1110	
			Ate		82074500			Ate		82028700		
				PRO	92176103	ø 312 x 24 x 73.5			PRO	92154903	ø 300 x 20 x 66	

BMW

BMW

		kW / hp											
3 Convertible (E93) 10/06→12/13													
67100				TPM0003					TPM0003				
328 i	09/11→12/13	179 / 243							91049300	ø 185 x 20			
									97003100				
67200			Ate	2331303	[–] 23313 20.3	⊖ M-technology ⊕ incr. payload →09/09 ⊖ incr. payload		Ate	2355001	[o] 23550 17.3	⊖ M-technology		
330 d	03/07→	170 / 231											
330 d	01/09→	180 / 245	Ate	2331382	[o] 23313 20.3	⊖ M-technology ⊕ incr. payload →09/09 ⊖ incr. payload		Ate	2355081	[o] 23550 17.3	⊖ M-technology		
330 i	03/07→	200 / 272											
			Ate	2379401	[o] 23794 20.3	09/09→ ⊖ M-technology ⊖ incr. payload		Bre	2431501	[o] 24315 16.9	⊕ M-technology		
			Ate	2379481	[o] 23794 20.3	09/09→ ⊖ M-technology ⊖ incr. payload			98031300	L1093	→03/10		
			Bre	2431601	[o] 24316 17	⊕ M-technology			98043900	L1110	03/10→		
				98031200	L635	⊖ M-technology →03/10		Bre	82504500		⊕ M-technology		
				98043800	L723	⊖ M-technology 03/10→		Ate	82057500		⊖ M-technology		
				98046000	L695	⊕ M-technology		Ate	82062900		⊖ M-technology		
			Bre	82504600		⊕ M-technology			92137903	ø 336 x 22 x 67	⊖ M-technology		
			Ate	82062900		09/09→ ⊖ M-technology ⊖ incr. payload			TPM0003				
			Ate	82072000		⊖ M-technology ⊕ incr. payload →09/09 ⊖ incr. payload			91049300	ø 185 x 20			
			Ate	82074500		09/09→ ⊖ M-technology ⊖ incr. payload			97003100				
				92137803	ø 330 x 24 x 73	09/09→ ⊖ M-technology ⊖ incr. payload							
				92155303	ø 348 x 30 x 73.2	⊖ M-technology ⊕ incr. payload →09/09 ⊖ incr. payload							
				TPM0003									
67300			Ate	2331303	[–] 23313 20.3			Ate	2355001	[o] 23550 17.3			
335 i	03/07→	225 / 306											
			Ate	2331382	[o] 23313 20.3			Ate	2355081	[o] 23550 17.3			
				98043800	L723	03/10→			98031300	L1093	→03/10		
				98046000	L695	→03/10			98043900	L1110	03/10→		
			Ate	82072000				Ate	82057500				
				92155303	ø 348 x 30 x 73.2			Ate	82062900				
				TPM0003					92137903	ø 336 x 22 x 67			
									TPM0003				
									91049300	ø 185 x 20			
									97003100				
67400			Ate	2331207	[o] 23312 20.3			Ate	2373001	[o] 23730 17.3			
M3	03/07→	309 / 420											
			Ate	2331281	[o] 23312 20.3			Ate	2373081	[o] 23730 17.3			
				98041400	L675	left			98031300	L1093			
				98041500	L690	right		Ate	82057500				
			Ate	82062900				Ate	82062900				
			Ate	82072000					TPM0003				
				TPM0009					91049300	ø 185 x 20			
									97003100				
3 Coupe (E36) 03/92→12/99													
67500			Ate	2328702	[o] 23287 17.8			Ate	2160702	[o] 21607 17.3	⊕ rear disc brake		
316 i	09/93→04/99	75 / 102											
			Ate	2328781	[o] 23287 17.8			Ate	2160781	[o] 21607 17.3	⊕ rear disc brake		
				98013300	L776				98013400	L790			

→

3 Coupe (E36) 03/92→12/99

316 i	09/93→04/99	67500 75 / 102	Ate		82030500			Ate		82028700		
			Ate		82062900			Ate		82062900		
				PRO	92055503	ø 286 x 12 x 51.7				91044000	ø 228.6 x 41.5	⊕ rear drum brake
					TPM0003			Luc		97008000		
										83044001	bore ø 23.8 ø 228.6 x 42	
									PRO	92055703	ø 280 x 10 x 60.1	⊕ rear disc brake
										TPM0003		
										94012500	ø 228,5 x 47	⊕ rear drum brake
										91045500	ø 160.5 x 25	⊕ rear disc brake
										97008100		
318 is 320 i 325 i	09/95→04/99 03/92→04/99 03/92→04/99	67600 103 / 140 110 / 150 141 / 192	Ate		2328702	[o] 23287 17.8		Ate		2160702	[o] 21607 17.3	
			Ate	epad	2328781	[o] 23287 17.8		Ate	epad	2160781	[o] 21607 17.3	
					98013300	L776				98013400	L790	
			Ate		82030500			Ate		82028700		
			Ate		82062900			Ate		82062900		
				PRO	92055603	ø 286 x 22 x 51.7			PRO	92055703	ø 280 x 10 x 60.1	
				PRO	92055605	ø 286 x 22 x 51.7				TPM0003		
					TPM0003					91045500	ø 160.5 x 25	
										97008100		
323 i 328 i	03/95→04/99 01/95→04/99	67700 125 / 170 142 / 193	Ate		2328702	[o] 23287 17.8		Ate		2160702	[o] 21607 17.3	
			Ate	epad	2328781	[o] 23287 17.8		Ate	epad	2160781	[o] 21607 17.3	
					98013300	L776				98013400	L790	
			Ate		82030500			Ate		82028700		
			Ate		82062900			Ate		82062900		
				PRO	92055603	ø 286 x 22 x 51.7			PRO	92072403	ø 276 x 19 x 60.1	
				PRO	92055605	ø 286 x 22 x 51.7				TPM0003		
					TPM0003					91045500	ø 160.5 x 25	
										97008100		
M3 3.2	09/95→12/99	67800 179 / 243	Ate		2347402	[o] 23474 20.3		Ate		2099501	[o] 20995 17.3	
					98019500	L810				98013400	L790	
			Ate		82030500			Ate		82028700		
			Ate		82062900			Ate		82062900		
					92071100	ø 315 x 28 x 52.5	left		PRO	92098703	ø 312 x 20 x 61	left
					92071200	ø 315 x 28 x 52.5	right		PRO	92098803	ø 312 x 20 x 61	right
				PRO	92071103	ø 315 x 28 x 52.5	left			TPM0003		
				PRO	92071203	ø 315 x 28 x 52.5	right			91033400	ø 180 x 25	
					TPM0003					97008100		
M3 3.2	10/95→04/99	67900 236 / 321	Ate		2347402	[o] 23474 20.3		Ate		2099501	[o] 20995 17.3	
					98019500	L810				98013400	L790	
			Ate		82030500			Ate		82028700		

BMW

BMW

		kW / hp									
3 Coupe (E36) 03/92→12/99											
67900			Ate		**82062900**			Ate		**82062900**		
M3 3.2	10/95→04/99	236 / 321			**92071100**	ø 315 x 28 x 52.5	left			**92098703**	ø 312 x 20 x 61	left
					92071200	ø 315 x 28 x 52.5	right			**92098803**	ø 312 x 20 x 61	right
				PRO	**92071103**	ø 315 x 28 x 52.5	left			**TPM0003**		
				PRO	**92071203**	ø 315 x 28 x 52.5	right			**91033400**	ø 180 x 25	
					TPM0003					**97003100**		
3 Coupe (E46) 04/99→12/06											
68000			Ate		**2328702**	[o] 23287 17.8		Ate		**2193402**	[o] 21934 17.3	
316 Ci	04/00→	77 / 105										
318 Ci	11/99→09/01	87 / 118	Ate	epad	**2328781**	[o] 23287 17.8		Ate	epad	**2193481**	[o] 21934 17.3	
					98023900	L596				**98024000**	L1338	
			Ate		**82039300**			Ate		**82028700**		
			Ate		**82062900**			Ate		**82062900**		
				PRO	**92055603**	ø 286 x 22 x 51.7			PRO	**92055703**	ø 280 x 10 x 60.1	
				PRO	**92055605**	ø 286 x 22 x 51.7				**TPM0003**		
					TPM0003					**91053300**	ø 160.5 x 20	
										97012600		
68100			Ate		**2328702**	[o] 23287 17.8		Ate		**2193402**	[o] 21934 17.3	
316 Ci	06/02→	85 / 115										
			Ate	epad	**2328781**	[o] 23287 17.8		Ate	epad	**2193481**	[o] 21934 17.3	
					98023900	L596				**98024000**	L1338	
			Ate		**82039300**			Ate		**82028700**		
			Ate		**82062900**			Ate		**82062900**		
				PRO	**92055603**	ø 286 x 22 x 51.7			PRO	**92055703**	ø 280 x 10 x 60.1	⊖ incr. payload
				PRO	**92055605**	ø 286 x 22 x 51.7			PRO	**92072403**	ø 276 x 19 x 60.1	⊕ incr. payload
					TPM0003					**TPM0003**		
										91053300	ø 160.5 x 20	
										97012600		
68200			Ate		**2328702**	[o] 23287 17.8		Ate		**2193402**	[o] 21934 17.3	
318 Ci	09/01→	105 / 143										
318 Ci	03/05→	110 / 150										
320 Ci	08/99→09/00	110 / 150	Ate	epad	**2328781**	[o] 23287 17.8		Ate	epad	**2193481**	[o] 21934 17.3	
320 Ci	09/00→	125 / 170										
					98023900	L596				**98024000**	L1338	
			Ate		**82039300**			Ate		**82028700**		
			Ate		**82062900**			Ate		**82062900**		
				PRO	**92055603**	ø 286 x 22 x 51.7			PRO	**92072403**	ø 276 x 19 x 60.1	
				PRO	**92055605**	ø 286 x 22 x 51.7				**TPM0003**		
					TPM0003					**91053300**	ø 160.5 x 20	
										97012600		
68300			Ate		**2328702**	[o] 23287 17.8		Ate		**2193402**	[o] 21934 17.3	
320 Cd	11/03→	110 / 150										
325 Ci	09/00→	141 / 192										
328 Ci	04/99→06/00	142 / 193	Ate	epad	**2328781**	[o] 23287 17.8		Ate	epad	**2193481**	[o] 21934 17.3	
					98023900	L596				**98024000**	L1338	
			Ate		**82039300**			Ate		**82028700**		
			Ate		**82062900**			Ate		**82062900**		

→

3 Coupe (E46) 04/99→12/06

68300											
320 Cd	11/03→	110 / 150		PRO	92097203	ø 300 x 22 x 51.5			PRO	92097303	ø 294 x 19 x 59.2	
325 Ci	09/00→	141 / 192		PRO	92097205	ø 300 x 22 x 51.5				TPM0003		
328 Ci	04/99→06/00	142 / 193			TPM0003					91053300	ø 160.5 x 20	
										97012600		
68400			Ate		2328702	[o] 23287 17.8		Ate		2193402	[o] 21934 17.3	
323 Ci	04/99→09/00	125 / 170	Ate	epad	2328781	[o] 23287 17.8		Ate	epad	2193481	[o] 21934 17.3	
					98023900	L596				98024000	L1338	
			Ate		82039300			Ate		82028700		
			Ate		82062900			Ate		82062900		
				PRO	92055603	ø 286 x 22 x 51.7	⊖ incr. payload		PRO	92072403	ø 276 x 19 x 60.1	⊖ incr. payload
				PRO	92055605	ø 286 x 22 x 51.7	⊖ incr. payload		PRO	92097303	ø 294 x 19 x 59.2	⊕ incr. payload
				PRO	92097203	ø 300 x 22 x 51.5	⊕ incr. payload			TPM0003		
				PRO	92097205	ø 300 x 22 x 51.5	⊕ incr. payload			91053300	ø 160.5 x 20	
					TPM0003					97012600		
68500			Ate		2328702	[o] 23287 17.8		Ate		2193402	[o] 21934 17.3	
325 Ci	09/00→12/06	137 / 186	Ate	epad	2328781	[o] 23287 17.8		Ate	epad	2193481	[o] 21934 17.3	
					98023900	L596				98024000	L1338	
			Ate		82039300			Ate		82028700		
			Ate		82062900			Ate		82062900		
				PRO	92097203	ø 300 x 22 x 51.5			PRO	92097303	ø 294 x 19 x 59.2	
				PRO	92097205	ø 300 x 22 x 51.5				TPM0003		
					TPM0003					91049300	ø 185 x 20	
										97003100		
68600			Ate		2318302	[o] 23183 20.3		Ate		2148703	[o] 21487 17.2	
330 Cd	03/03→	150 / 204	Ate	epad	2318381	[o] 23183 20.3				98024000	L1338	
330 Ci	06/00→	170 / 231			98026900	L650		Ate		82062900		
330 xi	06/00→	170 / 231	Ate		82028600				PRO	92107003	ø 320 x 22 x 60.5	
			Ate		82062900					TPM0003		
					92106900	ø 325 x 25 x 52.5				91049300	ø 185 x 20	
				PRO	92106903	ø 325 x 25 x 52.5				97003100		
				PRO	92106905	ø 325 x 25 x 52.5						
					TPM0003							
68700			Ate		2318302	[o] 23183 20.3		Ate		2148703	[o] 21487 17.2	
330 Ci	06/00→12/06	168 / 228	Ate	epad	2318381	[o] 23183 20.3				98024000	L1338	
					98026900	L650		Ate		82057500		
			Ate		82028600				PRO	92107003	ø 320 x 22 x 60.5	
					92106900	ø 325 x 25 x 52.5				TPM0003		
				PRO	92106903	ø 325 x 25 x 52.5				91049300	ø 185 x 20	
				PRO	92106905	ø 325 x 25 x 52.5				97003100		
					TPM0003							

BMW

BMW

30 kW / hp

3 Coupe (E46) 04/99→12/06

68800														
M3 3.2	06/00→	252 / 343	Ate		2347402	[o] 23474 20.3		Ate		2148701	[o] 21487 17.2	
M3 3.2	09/00→12/06	235 / 320			98026900	L650		Ate	epad	2148781	[o] 21487 17.2	
			Ate		82028600					98027300	L1350	
			Ate		82062900			Ate		82062900		
					TPM0009					TPM0003		
										91058700	ø 185 x 30	
										97032200		
68900														
M3 CSL	06/03→	265 / 360	Ate		2347402	[o] 23474 20.3		Ate		2148701	[o] 21487 17.2	
					98026900	L650		Ate	epad	2148781	[o] 21487 17.2	
			Ate		82062900					98027300	L1350	
					TPM0009			Ate		82062900		
										TPM0003		
										91058700	ø 185 x 30	
										97032200		

3 Coupe (E92) 06/06→12/10

69000														
316 i	09/07→	90 / 122	Ate		2409601	[o] 24096 20.3	⊖ M-technology	Luc		2362303	[o] 23623 17.4	⊖ M-technology
			Ate	epad	2409681	[o] 24096 20.3	⊖ M-technology	Luc	epad	2362381	[o] 23623 17.4	⊖ M-technology
			Bre		2431601	[o] 24316 17	⊕ M-technology	Ate		2392701	[o] 23927 17.3	⊕ M-technology
					98031200	L635	→03/10 ⊖ M-technology	Ate	epad	2392781	[o] 23927 17.3	⊕ M-technology
					98043700	L650	03/10→ ⊖ M-technology			98031300	L1093	→03/10
					98046000	L695	⊕ M-technology			98043900	L1110	03/10→
			Bre		82504600		⊕ M-technology	Ate		82028700		⊕ M-technology
			Ate		82062900		⊖ M-technology	Ate		82062900		⊕ M-technology
			Ate		82074500		⊖ M-technology		PRO	92133103	ø 296 x 10.5 x 65.1	⊖ M-technology
				PRO	92137703	ø 300 x 24 x 73.5	⊖ M-technology		PRO	92133003	ø 300 x 20 x 66.1	⊕ M-technology
					TPM0003					TPM0003		
										91053300	ø 160.5 x 20	
										97012600		
69100														
318 i	03/10→	105 / 143	Ate		2409601	[o] 24096 20.3	⊖ M-technology	Ate		2392701	[o] 23927 17.3	
			Ate	epad	2409681	[o] 24096 20.3	⊖ M-technology	Ate	epad	2392781	[o] 23927 17.3	
			Bre		2431601	[o] 24316 17	⊕ M-technology			98043900	L1110	
					98043700	L650	⊖ M-technology	Ate		82028700		
					98046000	L695	⊕ M-technology	Ate		82062900		
			Bre		82504600		⊕ M-technology		PRO	92133003	ø 300 x 20 x 66.1	
			Ate		82062900		⊖ M-technology			TPM0003		
			Ate		82074500		⊖ M-technology			91053300	ø 160.5 x 20	
				PRO	92137703	ø 300 x 24 x 73.5	⊖ M-technology			97012600		
					TPM0003							
69200														
320 d	01/07→	120 / 163	Ate		2331301	[o] 23313 20.3	⊖ M-technology	Ate		2392701	[o] 23927 17.3	
325 i	06/06→12/10	155 / 211	Ate	epad	2331381	[o] 23313 20.3	⊖ M-technology	Ate	epad	2392781	[o] 23927 17.3	

→

3 Coupe (E92) 06/06→12/10

		kW / hp												
69200			Bre		2431601	[o] 24316 17	⊕ M-technology			98031300	L1093	⊖ M-technology →2010-03 ⊕ M-technology
320 d	01/07→	120 / 163			98043800	L723	⊖ M-technology 2010-03→			98043900	L1110	⊖ M-technology 2010-03→
325 i	06/06→12/10	155 / 211			98046000	L695	⊖ M-technology →2010-03 ⊕ M-technology	Ate		82028700		⊖ M-technology
			Bre		82504600		⊕ M-technology		PRO	92133003	ø 300 x 20 x 66.1	
			Ate		82074500		⊖ M-technology			TPM0003		
				PRO	92176103	ø 312 x 24 x 73.5	⊖ M-technology			91053300	ø 160.5 x 20	
					TPM0003					97012600		
69300			Ate		2331301	[o] 23313 20.3	⊖ M-technology	Ate		2392701	[o] 23927 17.3	
320 d	03/07→	130 / 177	Ate	epad	2331381	[o] 23313 20.3	⊖ M-technology	Ate	epad	2392781	[o] 23927 17.3	
			Bre		2431601	[o] 24316 17	⊕ M-technology			98031300	L1093	→03/10
					98043800	L723	03/10→ ⊖ M-technology			98043900	L1110	03/10→
					98046000	L695	⊕ M-technology →03/10 ⊖ M-technology	Ate		82028700		
			Bre		82504600		⊕ M-technology	Ate		82062900		
			Ate		82062900		⊖ M-technology		PRO	92133003	ø 300 x 20 x 66.1	
			Ate		82074500		⊖ M-technology			TPM0003		
				PRO	92176103	ø 312 x 24 x 73.5	⊖ M-technology			91053300	ø 160.5 x 20	
					TPM0003					97012600		
69400			Ate		2331301	[o] 23313 20.3	⊖ M-technology	Ate		2392701	[o] 23927 17.3	
320 d	01/10→	135 / 184	Ate	epad	2331381	[o] 23313 20.3	⊖ M-technology	Ate	epad	2392781	[o] 23927 17.3	
			Bre		2431601	[o] 24316 17	⊕ M-technology			98043900	L1110	
					98043800	L723	⊖ M-technology	Ate		82028700		
					98046000	L695	⊕ M-technology	Ate		82062900		
			Ate		82062900		⊖ M-technology		PRO	92133003	ø 300 x 20 x 66.1	
			Ate		82074500		⊖ M-technology			TPM0003		
				PRO	92176103	ø 312 x 24 x 73.5	⊖ M-technology			91053300	ø 160.5 x 20	
					TPM0003					97012600		
69500			Ate		2331301	[o] 23313 20.3		Ate		2392701	[o] 23927 17.3	
320 d xDrive	09/08→	130 / 177										
320 d xDrive	01/10→	135 / 184	Ate	epad	2331381	[o] 23313 20.3		Ate	epad	2392781	[o] 23927 17.3	
320 xd	03/07→	130 / 177			98035500	L850	→03/10			98031300	L1093	→03/10
					98044300	L865	03/10→			98043900	L1110	03/10→
			Ate		82062900			Ate		82028700		
			Ate		82074500			Ate		82062900		
				PRO	92176103	ø 312 x 24 x 73.5			PRO	92154903	ø 300 x 20 x 66	
					TPM0003					TPM0003		
										91049300	ø 185 x 20	
										97003100		
69600			Ate		2409601	[o] 24096 20.3	⊖ M-technology	Ate		2392701	[o] 23927 17.3	
320 i	11/06→06/07	110 / 150	Ate	epad	2409681	[o] 24096 20.3	⊖ M-technology	Ate	epad	2392781	[o] 23927 17.3	
			Bre		2431601	[o] 24316 17	⊕ M-technology			98031300	L1093	
					98031200	L635	⊖ M-technology	Ate		82028700		

BMW

BMW

		kW / hp											
3 Coupe (E92) 06/06→12/10													
69600													
320 i	11/06→06/07	110 / 150		98046000	L695	⊕ M-technology	Ate	82062900		
			Bre	82504600		⊕ M-technology		92133003	ø 300 x 20 x 66.1	
			Ate	82062900		⊖ M-technology		TPM0003		
			Ate	82074500		⊖ M-technology		91053300	ø 160.5 x 20	
				92137703	ø 300 x 24 x 73.5	⊖ M-technology		97012600		
				TPM0003						
69700										
320 i	01/07→	120 / 163	Ate	2409601	[o] 24096 20.3	⊖ M-technology	Ate	2392701	[o] 23927 17.3	
			Ate	2409681	[o] 24096 20.3	⊖ M-technology	Ate	2392781	[o] 23927 17.3	
			Bre	2431601	[o] 24316 17	⊕ M-technology		98031300	L1093	⊖ M-technology →2010-03 ⊕ M-technology
				98031200	L635	⊖ M-technology →2010-03		98043900	L1110	⊖ M-technology 2010-03→
				98043700	L650	⊖ M-technology 2010-03→	Ate	82028700		⊖ M-technology
				98046000	L695	⊕ M-technology		92133003	ø 300 x 20 x 66.1	
			Bre	82504600		⊕ M-technology		TPM0003		
			Ate	82074500		⊖ M-technology		91053300	ø 160.5 x 20	
				92137703	ø 300 x 24 x 73.5	⊖ M-technology		97012600		
				TPM0003						
69800										
320 i	03/07→	125 / 170	Ate	2409601	[o] 24096 20.3	⊖ M-technology	Ate	2392701	[o] 23927 17.3	
320 i	06/07→	115 / 156	Ate	2409681	[o] 24096 20.3	⊖ M-technology	Ate	2392781	[o] 23927 17.3	
			Bre	2431601	[o] 24316 17	⊕ M-technology		98031300	L1093	→03/10
				98031200	L635	→03/10 ⊖ M-technology		98043900	L1110	03/10→
				98043700	L650	03/10→ ⊖ M-technology	Ate	82028700		
				98046000	L695	⊕ M-technology	Ate	82062900		
			Bre	82504600		⊕ M-technology		92133003	ø 300 x 20 x 66.1	
			Ate	82062900		⊖ M-technology		TPM0003		
			Ate	82074500		⊖ M-technology		91053300	ø 160.5 x 20	
				92137703	ø 300 x 24 x 73.5	⊖ M-technology		97012600		
				TPM0003						
69900										
323 i	06/06→	130 / 177	Ate	2331301	[o] 23313 20.3	09/07→ ⊖ M-technology	Ate	2392701	[o] 23927 17.3	
			Ate	2331381	[o] 23313 20.3	09/07→ ⊖ M-technology	Ate	2392781	[o] 23927 17.3	
			Ate	2379401	[o] 23794 20.3	→09/07 ⊖ M-technology		98031300	L1093	→03/10
			Ate	2379481	[o] 23794 20.3	→09/07 ⊖ M-technology		98043900	L1110	03/10→
			Bre	2431601	[o] 24316 17	⊕ M-technology	Ate	82028700		
				98031200	L635	→03/10 ⊖ M-technology	Ate	82062900		
				98043800	L723	03/10→ ⊖ M-technology		92133003	ø 300 x 20 x 66.1	
				98046000	L695	⊕ M-technology		TPM0003		
			Bre	82504600		⊕ M-technology		91053300	ø 160.5 x 20	
			Ate	82062900		⊖ M-technology		97012600		
			Ate	82074500		⊖ M-technology				
				92137703	ø 300 x 24 x 73.5	→09/07 ⊖ M-technology				
				92176103	ø 312 x 24 x 73.5	09/07→ ⊖ M-technology				

→

kW / hp

3 Coupe (E92) 06/06→12/10

323 i	06/06→	69900 130 / 177			TPM0003								
325 d	01/07→12/09	70000 155 / 211	Ate		2379401	[o] 23794 20.3	⊖ M-technology	Ate		2355001	[o] 23550 17.3	⊖ M-technology
			Ate	epad	2379481	[o] 23794 20.3	⊖ M-technology	Ate	epad	2355081	[o] 23550 17.3	⊖ M-technology
			Bre		2431601	[o] 24316 17	⊕ M-technology	Bre		2431501	[o] 24315 16.9	⊕ M-technology
					98043800	L723	⊖ M-technology			98031300	L1093	
					98046000	L695	⊕ M-technology	Ate		82057500		⊖ M-technology
			Bre		82504600		⊕ M-technology		PRO	92137903	ø 336 x 22 x 67	⊖ M-technology
			Ate		82074500		⊖ M-technology			TPM0003		
				PRO	92137803	ø 330 x 24 x 73	⊖ M-technology			91049300	ø 185 x 20	
					TPM0003					97003100		
325 d	03/07→	70100 145 / 197	Ate		2379401	[o] 23794 20.3	⊖ M-technology	Ate		2355001	[o] 23550 17.3	⊖ M-technology
			Ate	epad	2379481	[o] 23794 20.3	⊖ M-technology	Ate	epad	2355081	[o] 23550 17.3	⊖ M-technology
			Bre		2431601	[o] 24316 17	⊕ M-technology	Bre		2431501	[o] 24315 16.9	⊕ M-technology
					98031200	L635	→03/10 ⊖ M-technology			98031300	L1093	03/10→
					98043700	L650	03/10→ ⊖ M-technology			98043900	L1110	03/10→
					98046000	L695	⊕ M-technology	Bre		82504500		⊕ M-technology
			Bre		82504600		⊕ M-technology	Ate		82057500		⊖ M-technology
			Ate		82062900		⊖ M-technology	Ate		82062900		⊖ M-technology
			Ate		82074500		⊖ M-technology		PRO	92137903	ø 336 x 22 x 67	⊖ M-technology
				PRO	92137803	ø 330 x 24 x 73	⊖ M-technology			TPM0003		
					TPM0003					91049300	ø 185 x 20	
										97003100		
325 d	04/10→	70200 150 / 204	Ate		2379401	[o] 23794 20.3	⊖ M-technology	Ate		2355001	[o] 23550 17.3	⊖ M-technology
			Ate	epad	2379481	[o] 23794 20.3	⊖ M-technology	Ate	epad	2355081	[o] 23550 17.3	⊖ M-technology
			Bre		2431601	[o] 24316 17	⊕ M-technology	Bre		2431501	[o] 24315 16.9	⊕ M-technology
					98043800	L723	⊖ M-technology			98043900	L1110	
					98046000	L695	⊕ M-technology	Bre		82504500		⊕ M-technology
			Bre		82504600		⊕ M-technology	Ate		82057500		⊖ M-technology
			Ate		82062900		⊖ M-technology	Ate		82062900		⊖ M-technology
			Ate		82074500		⊖ M-technology		PRO	92137903	ø 336 x 22 x 67	⊖ M-technology
				PRO	92137803	ø 330 x 24 x 73	⊖ M-technology			TPM0003		
					TPM0003					91049300	ø 185 x 20	
										97003100		
325 i	09/06→	70300 160 / 218	Ate		2331301	[o] 23313 20.3	09/07→ ⊖ M-technology	Ate		2392701	[o] 23927 17.3	
			Ate	epad	2331381	[o] 23313 20.3	09/07→ ⊖ M-technology	Ate	epad	2392781	[o] 23927 17.3	
			Ate		2379401	[o] 23794 20.3	→09/07 ⊖ M-technology			98031300	L1093	→03/10
			Ate	epad	2379481	[o] 23794 20.3	→09/07 ⊖ M-technology			98043900	L1110	03/10→
			Bre		2431601	[o] 24316 17	⊕ M-technology	Ate		82028700		
					98031200	L635	→03/10 ⊖ M-technology	Ate		82062900		
					98043800	L723	03/10→ ⊖ M-technology		PRO	92133003	ø 300 x 20 x 66.1	

BMW

BMW

3 Coupe (E92) 06/06→12/10

		kW / hp											
70300													
325 i	09/06→	160 / 218		98046000	L695	⊕ M-technology		TPM0003		
			Bre	82504600		⊕ M-technology		91053300	ø 160.5 x 20	
			Ate	82062900		⊖ M-technology		97012600		
			Ate	82074500		⊖ M-technology				
			PRO	92137803	ø 330 x 24 x 73	→09/07 ⊖ M-technology				
			PRO	92176103	ø 312 x 24 x 73.5	09/07→ ⊖ M-technology				
				TPM0003						
70400													
325 i	07/07→	155 / 211	Ate	2379401	[o] 23794 20.3	⊖ M-technology	Ate	2392701	[o] 23927 17.3	
			Ate epad	2379481	[o] 23794 20.3	⊖ M-technology	Ate epad	2392781	[o] 23927 17.3	
			Bre	2431601	[o] 24316 17	⊕ M-technology		98031300	L1093	⊖ M-technology →2010-03 ⊕ M-technology
				98031200	L635	⊖ M-technology →2010-03		98043900	L1110	⊖ M-technology 2010-03→
				98043800	L723	⊖ M-technology 2010-03→	Ate	82028700		⊖ M-technology
				98046000	L695	⊕ M-technology	PRO	92133003	ø 300 x 20 x 66.1	
			Bre	82504600		⊕ M-technology		TPM0003		
			Ate	82074500		⊖ M-technology		91053300	ø 160.5 x 20	
			PRO	92137803	ø 330 x 24 x 73	⊖ M-technology		97012600		
				TPM0003						
70500													
325 i	09/07→	160 / 218	Ate	2379401	[o] 23794 20.3	⊖ M-technology	Ate	2392701	[o] 23927 17.3	
			Ate epad	2379481	[o] 23794 20.3	⊖ M-technology	Ate epad	2392781	[o] 23927 17.3	
			Bre	2431601	[o] 24316 17	⊕ M-technology		98031300	L1093	→03/10
				98031200	L635	→03/10 ⊖ M-technology		98043900	L1110	03/10→
				98043700	L650	03/10→ ⊖ M-technology	Ate	82028700		
				98046000	L695	⊕ M-technology	Ate	82062900		
			Bre	82504600		⊕ M-technology	PRO	92133003	ø 300 x 20 x 66.1	
			Ate	82062900		⊖ M-technology		TPM0003		
			Ate	82074500		⊖ M-technology		91053300	ø 160.5 x 20	
			PRO	92137803	ø 330 x 24 x 73	⊖ M-technology		97012600		
				TPM0003						
70600													
325 i xDrive	09/08→	160 / 218	Ate	2379401	[o] 23794 20.3		Ate	2392701	[o] 23927 17.3	
325 xi	09/06→	160 / 218								
325 xi	09/07→	160 / 218	Ate epad	2379481	[o] 23794 20.3		Ate epad	2392781	[o] 23927 17.3	
				98035500	L850	→03/10		98031300	L1093	→03/10
				98044300	L865	03/10→		98043900	L1110	03/10→
			Ate	82062900			Ate	82028700		
			Ate	82074500			Ate	82062900		
			PRO	92137803	ø 330 x 24 x 73		PRO	92154903	ø 300 x 20 x 66	
				TPM0003				TPM0003		
								91049300	ø 185 x 20	
								97003100		
70700													
328 i	08/06→11/07	187 / 254	Ate	2331301	[o] 23313 20.3	09/07→ ⊖ M-technology	Ate	2392701	[o] 23927 17.3	
			Ate epad	2331381	[o] 23313 20.3	09/07→ ⊖ M-technology	Ate epad	2392781	[o] 23927 17.3	

→

3 Coupe (E92) 06/06→12/10

328 i	08/06→11/07	70700 187 / 254	Ate		2379401	[o] 23794 20.3	→09/07 ⊖ M-technology			98031300	L1093	
			Ate	epad	2379481	[o] 23794 20.3	→09/07 ⊖ M-technology	Ate		82028700		
			Bre		2431601	[o] 24316 17	⊕ M-technology	Ate		82062900		
					98031200	L635	⊖ M-technology		PRO	92133003	ø 300 x 20 x 66.1	
					98046000	L695	⊕ M-technology			TPM0003		
			Bre		82504600		⊕ M-technology			91053300	ø 160.5 x 20	
			Ate		82062900		⊖ M-technology →09/07			97012600		
			Ate		82074500							
				PRO	92137703	ø 300 x 24 x 73.5	09/07→ ⊖ M-technology					
				PRO	92176103	ø 312 x 24 x 73.5	→09/07 ⊖ M-technology					
					TPM0003							
328 i	09/06→12/10	70800 171 / 233	Ate		2331301	[o] 23313 20.3	⊖ M-technology	Ate		2392701	[o] 23927 17.3	⊖ M-technology →2009-09 ⊕ M-technology
			Ate	epad	2331381	[o] 23313 20.3	⊖ M-technology	Ate	epad	2392781	[o] 23927 17.3	⊖ M-technology →2009-09 ⊕ M-technology
			Bre		2431601	[o] 24316 17	⊕ M-technology			98031300	L1093	⊖ M-technology →2010-03 ⊕ M-technology
					98043800	L723	⊖ M-technology 2010-03→			98043900	L1110	⊖ M-technology 2010-03→
					98046000	L695	⊖ M-technology →2010-03 ⊕ M-technology	Ate		82028700		
			Bre		82504600		⊕ M-technology		PRO	92133003	ø 300 x 20 x 66.1	
			Ate		82074500		⊖ M-technology			TPM0003		
				PRO	92137703	ø 300 x 24 x 73.5	⊖ M-technology →2007-09			91049300	ø 185 x 20	
				PRO	92176103	ø 312 x 24 x 73.5	⊖ M-technology 2007-09→			97003100		
					TPM0003							
328 i	06/07→	70900 172 / 234	Ate		2331301	[o] 23313 20.3	⊖ M-technology	Ate		2392701	[o] 23927 17.3	
			Ate	epad	2331381	[o] 23313 20.3	⊖ M-technology	Ate	epad	2392781	[o] 23927 17.3	
			Bre		2431601	[o] 24316 17	⊕ M-technology			98031300	L1093	→03/10
					98031200	L635	→03/10 ⊖ M-technology			98043900	L1110	03/10→
					98043800	L723	03/10→ ⊖ M-technology	Ate		82028700		
					98046000	L695	⊕ M-technology	Ate		82062900		
			Bre		82504600		⊕ M-technology		PRO	92133003	ø 300 x 20 x 66.1	
			Ate		82074500		⊖ M-technology			TPM0003		
				PRO	92176103	ø 312 x 24 x 73.5	⊖ M-technology			91053300	ø 160.5 x 20	
					TPM0003					97012600		
328 i xDrive	09/09→	71000 171 / 233	Ate		2331301	[o] 23313 20.3				98031300	L1093	→2010-03
			Ate	epad	2331381	[o] 23313 20.3				98043900	L1110	2010-03→
					98043800	L723	2010-03→	Ate		82028700		
					98046000	L695	→2010-03		PRO	92154903	ø 300 x 20 x 66	
			Ate		82074500					TPM0003		
				PRO	92176103	ø 312 x 24 x 73.5				91049300	ø 185 x 20	
					TPM0003					97003100		
328 xi	09/06→12/07	71100 171 / 233	Ate		2331301	[o] 23313 20.3		Ate		2392701	[o] 23927 17.3	
			Ate	epad	2331381	[o] 23313 20.3		Ate	epad	2392781	[o] 23927 17.3	

BMW

BMW

30 kW / hp

3 Coupe (E92) 06/06→12/10

71100														
328 xi	09/06→12/07	171 / 233			98035500	L850					98031300	L1093		
			Ate		82074500				Ate		82028700			
				PRO	92137703	ø 300 x 24 x 73.5	→09/07			PRO	92154903	ø 300 x 20 x 66		
				PRO	92176103	ø 312 x 24 x 73.5	09/07→				TPM0003			
					TPM0003						91049300	ø 185 x 20		
											97003100			
71200														
330 d	09/06→	170 / 231	Ate		2331303	[–] 23313 20.3	⊖ M-technology		Ate		2355001	[o] 23550 17.3	⊖ M-technology	
330 d	01/09→	180 / 245	Ate	epad	2331382	[o] 23313 20.3	⊖ M-technology		Ate	epad	2355081	[o] 23550 17.3	⊖ M-technology	
			Bre		2431601	[o] 24316 17	⊕ M-technology		Bre		2431501	[o] 24315 16.9	⊕ M-technology	
					98031200	L635	→03/10 ⊖ M-technology				98031300	L1093	→03/10	
					98043800	L723	03/10→ ⊖ M-technology				98043900	L1110	03/10→	
					98046000	L695	⊕ M-technology		Bre		82504500		⊕ M-technology	
			Bre		82504600		⊕ M-technology		Ate		82057500		⊖ M-technology	
			Ate		82072000		⊖ M-technology		Ate		82062900		⊖ M-technology	
				PRO	92155303	ø 348 x 30 x 73.2	⊖ M-technology			PRO	92137903	ø 336 x 22 x 67	⊖ M-technology	
					TPM0003						TPM0003			
											91049300	ø 185 x 20		
											97003100			
71300														
330 d xDrive	01/09→	180 / 245	Ate		2379401	[o] 23794 20.3			Ate		2355001	[o] 23550 17.3		
330 i xDrive	09/08→	200 / 272	Ate	epad	2379481	[o] 23794 20.3			Ate	epad	2355081	[o] 23550 17.3		
330 xd	01/09→	180 / 245			98035500	L850	→03/10				98031300	L1093	→03/12	
330 xi	09/06→	200 / 272			98044300	L865	03/10→				98043900	L1110	03/10→	
			Ate		82062900				Ate		82057500			
			Ate		82074500				Ate		82062900			
				PRO	92137803	ø 330 x 24 x 73				PRO	92137903	ø 336 x 22 x 67		
					TPM0003						TPM0003			
											91049300	ø 185 x 20		
											97003100			
71400														
330 i	09/06→	190 / 258	Ate		2379401	[o] 23794 20.3	⊖ M-technology		Ate		2355001	[o] 23550 17.3	⊖ M-technology	
			Ate	epad	2379481	[o] 23794 20.3	⊖ M-technology		Ate	epad	2355081	[o] 23550 17.3	⊖ M-technology	
			Bre		2431601	[o] 24316 17	⊕ M-technology		Bre		2431501	[o] 24315 16.9	⊕ M-technology	
					98031200	L635	→03/10 ⊖ M-technology				98031300	L1093	→03/10	
					98043700	L650	03/10→ ⊖ M-technology				98043900	L1110	03/10→	
					98046000	L695	⊕ M-technology		Bre		82504500		⊕ M-technology	
			Bre		82504600		⊕ M-technology		Ate		82057500		⊖ M-technology	
			Ate		82062900		⊖ M-technology		Ate		82062900		⊖ M-technology	
			Ate		82074500		⊖ M-technology			PRO	92137903	ø 336 x 22 x 67	⊖ M-technology	
				PRO	92137803	ø 330 x 24 x 73	⊖ M-technology				TPM0003			
					TPM0003						91049300	ø 185 x 20		
											97003100			

→

3 Coupe (E92) 06/06→12/10

		kW / hp											
71500													
330 i	09/06→	200 / 272	Ate	2331303	[–] 23313	20.3	→09/09 ⊖ M-technology	Ate	2355001	[o] 23550	17.3	⊖ M-technology	
			Ate epad	2331382	[o] 23313	20.3	→09/09 ⊖ M-technology	Ate epad	2355081	[o] 23550	17.3	⊖ M-technology	
			Ate	2379401	[o] 23794	20.3	09/09→ ⊖ M-technology	Bre	2431501	[o] 24315	16.9	⊕ M-technology	
			Ate epad	2379481	[o] 23794	20.3	09/09→ ⊖ M-technology		98031300	L1093		→03/10	
			Bre	2431601	[o] 24316	17	⊕ M-technology		98043900	L1110		03/10→	
				98031200	L635		→03/10 ⊖ M-technology	Bre	82504500			⊕ M-technology	
				98043800	L723		03/10→ ⊖ M-technology	Ate	82057500			⊖ M-technology	
				98046000	L695		⊕ M-technology	Ate	82062900			⊖ M-technology	
			Bre	82504600			⊕ M-technology	PRO	92137903	ø 336 x 22 x 67		⊖ M-technology	
			Ate	82062900			⊖ M-technology 09/09→		TPM0003				
			Ate	82072000			→09/09 ⊖ M-technology		91049300	ø 185 x 20			
			Ate	82074500			09/09→ ⊖ M-technology		97003100				
			PRO	92137803	ø 330 x 24 x 73		09/09→ ⊖ M-technology						
			PRO	92155303	ø 348 x 30 x 73.2		→09/09 ⊖ M-technology						
				TPM0003									
71600													
330 xd	09/06→	170 / 231	Ate	2331303	[–] 23313	20.3		Ate	2355001	[o] 23550	17.3		
335 d	09/06→	210 / 286	Ate epad	2331382	[o] 23313	20.3		Ate epad	2355081	[o] 23550	17.3		
335 i	09/06→	225 / 306		98043800	L723		03/10→		98031300	L1093		→03/10	
335 xi	09/06→	225 / 306		98046000	L695		→03/10		98043900	L1110		03/10→	
			Ate	82072000				Ate	82057500				
			PRO	92155303	ø 348 x 30 x 73.2			Ate	82062900				
				TPM0003				PRO	92137903	ø 336 x 22 x 67			
									TPM0003				
									91049300	ø 185 x 20			
									97003100				
71700													
330 xi	09/06→	190 / 258	Ate	2379401	[o] 23794	20.3		Ate	2355001	[o] 23550	17.3		
			Ate epad	2379481	[o] 23794	20.3		Ate epad	2355081	[o] 23550	17.3		
				98035500	L850		→03/10		98031300	L1093		→03/10	
				98044300	L865		03/10→		98043900	L1110		03/10→	
			Ate	82062900				Ate	82057500				
			Ate	82074500				Ate	82062900				
			PRO	92137803	ø 330 x 24 x 73			PRO	92137903	ø 336 x 22 x 67			
				TPM0003					TPM0003				
									91049300	ø 185 x 20			
									97003100				
71800													
335 i xDrive	09/08→	225 / 306	Ate	2331303	[–] 23313	20.3		Ate	2355001	[o] 23550	17.3		
			Ate epad	2331382	[o] 23313	20.3		Ate epad	2355081	[o] 23550	17.3		
				98035500	L850		→03/10		98031300	L1093		→03/10	
				98044300	L865		03/10→		98043900	L1110		03/10→	
			Ate	82072000				Ate	82057500				

BMW

BMW

		kW / hp										
3 Coupe (E92) 06/06→12/10												
71800				92155303	ø 348 x 30 x 73.2		Ate		82062900		
335 i xDrive	09/08→	225 / 306		TPM0003					92137903	ø 336 x 22 x 67	
									TPM0003		
									91049300	ø 185 x 20	
									97003100		
71900			Ate	2331207	[o] 23312 20.3		Ate		2373001	[o] 23730 17.3	
M	03/07→	309 / 420	Ate	2331281	[o] 23312 20.3		Ate		2373081	[o] 23730 17.3	
				98041400	L675	left			98031300	L1093	
				98041500	L690	right	Ate		82057500		
			Ate	82062900			Ate		82062900		
			Ate	82072000					TPM0003		
				TPM0009					91049300	ø 185 x 20	
									97003100		
3 Gran Turismo (F34) 03/13→												
72000			Ate	2550601	[o] 25506 18.2	⊖ M-technology ⊖ perform. brk. sys.	Ate		2502902	[o] 25029 17	⊕ perform. brk. sys.
318 d	03/13→	105 / 143		98047500	L675		Ate		2530701	[o] 25307 17.2	⊖ perform. brk. sys.
320 i	03/13→	135 / 184		92238503	ø 300 x 22 x 73.2	⊖ M-technology ⊖ perform. brk. sys.			98047600	L1045	
				TPM0003					92239703	ø 300 x 20 x 66	⊖ M-technology ⊖ perform. brk. sys.
									TPM0003		
									91049300	ø 185 x 20	
									97003100		
72100			Bos	2519901	[o] 25199 19.2	⊖ M-technology	Ate		2502902	[o] 25029 17	⊕ M-technology
320 d	03/13→	120 / 163		98047500	L675		Ate		2530701	[o] 25307 17.2	⊖ M-technology
			Ate	82517800		⊖ M-technology			98047600	L1045	
				92176103	ø 312 x 24 x 73.5	⊖ M-technology ⊖ perform. brk. sys.			TPM0003		
				TPM0003					91049300	ø 185 x 20	
									97003100		
72200			Bos	2519901	[o] 25199 19.2	⊖ M-technology ⊖ perform. brk. sys.	Ate		2502902	[o] 25029 17	⊕ perform. brk. sys.
320 d	03/13→	135 / 184		98047500	L675		Ate		2530701	[o] 25307 17.2	⊖ perform. brk. sys.
			Ate	82517800		⊖ M-technology ⊖ perform. brk. sys.			98047600	L1045	
				92176103	ø 312 x 24 x 73.5	⊖ M-technology ⊖ perform. brk. sys.			92239703	ø 300 x 20 x 66	⊖ M-technology ⊖ perform. brk. sys.
				TPM0003					TPM0003		
									91049300	ø 185 x 20	
									97003100		
72300			Ate	2550601	[o] 25506 18.2	⊖ M-technology ⊖ perform. brk. sys.	Ate		2502902	[o] 25029 17	⊕ perform. brk. sys.
320 d xDrive	03/13→	135 / 184		98047500	L675		Ate		2530701	[o] 25307 17.2	⊖ perform. brk. sys.
320 i xDrive	03/13→	135 / 184		TPM0003					98047600	L1045	
									92239703	ø 300 x 20 x 66	⊖ M-technology ⊖ perform. brk. sys.
									TPM0003		
									91049300	ø 185 x 20	

→

3 Gran Turismo (F34) 03/13→

		kW / hp											
72300													
320 d xDrive	03/13→	135 / 184								97003100			
320 i xDrive	03/13→	135 / 184											
72400			Bos		2519901	[o] 25199 19.2	⊖ M-technology	Ate		2502902	[o] 25029 17	⊕ M-technology	
320 d xDrive	05/13→	147 / 200			98047500	L675	left	Ate		2530701	[o] 25307 17.2	⊖ M-technology	
			Ate		82517800		⊖ M-technology			98047600	L1045		
				PRO	92176103	ø 312 x 24 x 73.5	⊖ M-technology ⊖ perform. brk. sys.		PRO	92239703	ø 300 x 20 x 66	⊖ M-technology ⊖ perform. brk. sys. →04/14	
					TPM0003					TPM0003			
										91049300	ø 185 x 20		
										97003100			
72500			Bos		2519901	[o] 25199 19.2		Ate		2502902	[o] 25029 17	⊕ perform. brk. sys.	
325 d	03/13→	160 / 218											
328 i xDrive	03/13→	180 / 245			98047500	L675	left	Ate		2530701	[o] 25307 17.2	⊖ perform. brk. sys.	
			Ate		82517800		⊖ M-technology			98047600	L1045		
				PRO	92242003	ø 330 x 24 x 73.2	⊖ M-technology			TPM0003			
					TPM0003					91049300	ø 185 x 20		
										97003100			
72600			Bos		2519901	[o] 25199 19.2	⊖ M-technology	Ate		2502902	[o] 25029 17	⊕ M-technology	
325 d	07/13→	155 / 211			98047500	L675		Ate		2530701	[o] 25307 17.2	⊖ M-technology	
			Ate		82517800		⊖ M-technology			98047600	L1045		
				PRO	92242003	ø 330 x 24 x 73.2	⊖ M-technology ⊖ perform. brk. sys.			TPM0003			
					TPM0003					91049300	ø 185 x 20		
										97003100			
72700			Bos		2519901	[o] 25199 19.2	⊖ M-technology ⊖ perform. brk. sys.	Ate		2502902	[o] 25029 17	⊕ perform. brk. sys.	
328 i	03/13→	180 / 245			98047500	L675		Ate		2530701	[o] 25307 17.2	⊖ perform. brk. sys.	
			Ate		82517800		⊖ M-technology ⊖ perform. brk. sys.			98047600	L1045		
				PRO	92242003	ø 330 x 24 x 73.2	⊖ M-technology ⊖ perform. brk. sys.		PRO	92239703	ø 300 x 20 x 66	⊖ M-technology ⊖ perform. brk. sys.	
					TPM0003					TPM0003			
										91049300	ø 185 x 20		
										97003100			
72800			Bos		2519901	[o] 25199 19.2	⊖ M-technology	Ate		2502902	[o] 25029 17	⊕ M-technology	
330 d	01/14→	190 / 258			98047500	L675	left	Ate		2551401	[o] 25514 18.3	⊖ M-technology	
			Ate		82517800		⊖ M-technology			98047600	L1045		
				PRO	92242003	ø 330 x 24 x 73.2	⊖ M-technology ⊖ perform. brk. sys.		PRO	92241903	ø 330 x 20 x 66.2	⊖ M-technology	
					TPM0003					TPM0003			
										91049300	ø 185 x 20		
										97003100			
72900			Bos		2519901	[o] 25199 19.2	⊖ M-technology	Ate		2502902	[o] 25029 17	⊕ M-technology	
330 d xDrive	01/14→	190 / 258			98047500	L675	left	Ate		2551401	[o] 25514 18.3	⊖ M-technology	
			Ate		82517800		⊖ M-technology			98047600	L1045		
				PRO	92242003	ø 330 x 24 x 73.2	⊖ M-technology ⊖ perform. brk. sys.		PRO	92241903	ø 330 x 20 x 66.2	⊖ perform. brk. sys.	
					TPM0003					TPM0003			
										91049300	ø 185 x 20		

BMW

BMW

		kW / hp										
3 Gran Turismo (F34) 03/13→												
330 d xDrive	01/14→	72900 190 / 258										
				98047500	L675	left	Ate	2502902	[o] 25029 17	⊕ M-technology		
			PRO	92242003	ø 330 x 24 x 73.2	⊖ M-technology ⊖ perform. brk. sys.	Ate	2551401	[o] 25514 18.3	⊖ M-technology		
				TPM0003				98047600	L1045			
							PRO	92241903	ø 330 x 20 x 66.2	⊖ perform. brk. sys.		
								TPM0003				
								91049300	ø 185 x 20			
								97003100				
335 i	03/13→	73100 225 / 306		98047500	L675		Ate	2502902	[o] 25029 17	⊕ M-technology ⊕ perform. brk. sys.		
				TPM0003			Ate	2551401	[o] 25514 18.3	⊖ M-technology ⊖ perform. brk. sys.		
								98047600	L1045			
							PRO	92241903	ø 330 x 20 x 66.2	⊖ M-technology ⊖ perform. brk. sys.		
								TPM0003				
								91049300	ø 185 x 20			
								97003100				
335 i 335 i 335 i xDrive 335 i xDrive	03/13→03/14 07/13→ 03/13→03/14 03/14→	73200 240 / 326 250 / 340 240 / 326 250 / 340		98047500	L675	left	Ate	2502902	[o] 25029 17	⊕ M-technology		
				TPM0003			Ate	2551401	[o] 25514 18.3	⊖ M-technology		
								98047600	L1045			
							PRO	92241903	ø 330 x 20 x 66.2	⊖ M-technology ⊖ perform. brk. sys.		
								TPM0003				
								91049300	ø 185 x 20			
								97003100				
335 i xDrive	03/13→	73300 225 / 306		98047500	L675	left	Ate	2502902	[o] 25029 17	⊕ M-technology		
				TPM0003			Ate	2551401	[o] 25514 18.3	⊖ M-technology		
								98047600	L1045			
								TPM0003				
								91049300	ø 185 x 20			
								97003100				
3 Saloon (E46) 02/98→04/05 → 3 (E46), Page 94												
3 Saloon (E90) 01/05→12/11 → 3 (E90), Page 97												
3 Stufenheck (E46) 02/98→04/05 → 3 (E46), Page 94												
3 Stufenheck (E90) 01/05→12/11 → 3 (E90), Page 97												
3 Touring (E36) 01/95→10/99												
316 i 318 tds	01/96→10/99 01/95→10/99	73400 75 / 102 66 / 90	Ate	2328702	[o] 23287 17.8		Ate	2160702	[o] 21607 17.3			
			Ate epad	2328781	[o] 23287 17.8		Ate epad	2160781	[o] 21607 17.3			
				98013300	L776			98013400	L790			
			Ate	82030500			Ate	82028700				
			Ate	82062900			Ate	82062900				
			PRO	92055503	ø 286 x 12 x 51.7		PRO	92055703	ø 280 x 10 x 60.1			
				TPM0003				TPM0003				
								91045500	ø 160.5 x 25			

→

3 Touring (E36) 01/95→10/99

		kW / hp										
73400												
316 i	01/96→10/99	75 / 102								97008100		
318 tds	01/95→10/99	66 / 90										
73500			Ate	2328702	[o] 23287 17.8		Ate	2160702	[o] 21607 17.3			
318 i	07/95→10/99	85 / 116	Ate epad	2328781	[o] 23287 17.8		Ate epad	2160781	[o] 21607 17.3			
				98013300	L776			98013400	L790			
			Ate	82030500			Ate	82028700				
			Ate	82062900			Ate	82062900				
			PRO	92055503	ø 286 x 12 x 51.7	⊖ governm. veh.	PRO	92055703	ø 280 x 10 x 60.1			
			PRO	92055603	ø 286 x 22 x 51.7	⊕ governm. veh.		TPM0003				
			PRO	92055605	ø 286 x 22 x 51.7	⊕ governm. veh.		91045500	ø 160.5 x 25			
				TPM0003				97008100				
73600			Ate	2328702	[o] 23287 17.8		Ate	2160702	[o] 21607 17.3			
320 i	01/95→10/99	110 / 150	Ate epad	2328781	[o] 23287 17.8		Ate epad	2160781	[o] 21607 17.3			
325 tds	01/95→10/99	105 / 143		98013300	L776			98013400	L790			
			Ate	82030500			Ate	82028700				
			Ate	82062900			Ate	82062900				
			PRO	92055603	ø 286 x 22 x 51.7		PRO	92055703	ø 280 x 10 x 60.1			
			PRO	92055605	ø 286 x 22 x 51.7			TPM0003				
				TPM0003				91045500	ø 160.5 x 25			
								97008100				
73700			Ate	2328702	[o] 23287 17.8		Ate	2160702	[o] 21607 17.3			
323 i	09/95→10/99	125 / 170	Ate epad	2328781	[o] 23287 17.8		Ate epad	2160781	[o] 21607 17.3			
328 i	01/95→10/99	142 / 193		98013300	L776			98013400	L790			
			Ate	82030500			Ate	82028700				
			Ate	82062900			Ate	82062900				
			PRO	92055603	ø 286 x 22 x 51.7		PRO	92072403	ø 276 x 19 x 60.1			
			PRO	92055605	ø 286 x 22 x 51.7			TPM0003				
				TPM0003				91045500	ø 160.5 x 25			
								97008100				

3 Touring (E46) 10/99→12/06

73800			Ate	2328702	[o] 23287 17.8		Ate	2193402	[o] 21934 17.3			
316 i	03/02→02/05	85 / 115										
316 i	06/02→02/05	85 / 115	Ate epad	2328781	[o] 23287 17.8		Ate epad	2193481	[o] 21934 17.3			
318 d	03/02→02/05	85 / 115										
318 d	03/03→02/05	85 / 116		98023900	L596			98024000	L1338			
318 i	10/99→09/01	85 / 116										
320 d	03/00→09/01	100 / 136	Ate	82039300			Ate	82028700				
			Ate	82062900			Ate	82062900				
			PRO	92055603	ø 286 x 22 x 51.7		PRO	92072403	ø 276 x 19 x 60.1			
			PRO	92055605	ø 286 x 22 x 51.7			TPM0003				
				TPM0003				91053300	ø 160.5 x 20			
								97012600				
73900			Ate	2328702	[o] 23287 17.8		Ate	2193402	[o] 21934 17.3			
318 i	10/99→09/01	87 / 118										
318 i	09/01→02/05	105 / 143	Ate epad	2328781	[o] 23287 17.8		Ate epad	2193481	[o] 21934 17.3			
320 i	10/99→09/00	110 / 150										

BMW

BMW

		kW / hp									
3 Touring (E46) 10/99→12/06											
73900				98023900	L596			98024000	L1338	
318 i	10/99→09/01	87 / 118	Ate	82039300			Ate	82028700		
318 i	09/01→02/05	105 / 143	Ate	82062900			Ate	82062900		
320 i	10/99→09/00	110 / 150	PRO	92055603	ø 286 x 22 x 51.7	⊖ incr. payload	PRO	92072403	ø 276 x 19 x 60.1	⊖ incr. payload
			PRO	92055605	ø 286 x 22 x 51.7	⊖ incr. payload	PRO	92097303	ø 294 x 19 x 59.2	⊕ incr. payload
			PRO	92097203	ø 300 x 22 x 51.5	⊕ incr. payload		TPM0003		
			PRO	92097205	ø 300 x 22 x 51.5	⊕ incr. payload		91053300	ø 160.5 x 20	
				TPM0003				97012600		
74000			Ate	2328702	[o] 23287 17.8		Ate	2193402	[o] 21934 17.3	
320 d	09/01→02/05	110 / 150	Ate	2328781	[o] 23287 17.8		Ate	2193481	[o] 21934 17.3	
320 i	09/00→02/05	125 / 170		98023900	L596			98024000	L1338	
325 i	09/00→02/05	141 / 192	Ate	82039300			Ate	82028700		
328 i	10/99→06/00	142 / 193	Ate	82062900			Ate	82062900		
			PRO	92097203	ø 300 x 22 x 51.5		PRO	92097303	ø 294 x 19 x 59.2	
			PRO	92097205	ø 300 x 22 x 51.5			TPM0003		
				TPM0003				91053300	ø 160.5 x 20	
								97012600		
74100			Ate	2328702	[o] 23287 17.8		Ate	2193402	[o] 21934 17.3	
323 i	10/99→12/00	125 / 170	Ate	2328781	[o] 23287 17.8		Ate	2193481	[o] 21934 17.3	
325 i	09/00→02/05	137 / 186		98023900	L596			98024000	L1338	
			Ate	82039300			Ate	82028700		
			PRO	92097203	ø 300 x 22 x 51.5		PRO	92097303	ø 294 x 19 x 59.2	
			PRO	92097205	ø 300 x 22 x 51.5			TPM0003		
				TPM0003				91053300	ø 160.5 x 20	
								97012600		
74200			Ate	2328702	[o] 23287 17.8		Ate	2193402	[o] 21934 17.3	
325 xi	09/00→02/05	137 / 186	Ate	2328781	[o] 23287 17.8		Ate	2193481	[o] 21934 17.3	
325 xi	09/05→12/06	160 / 218		98026900	L650			98024000	L1338	
			Ate	82039300			Ate	82028700		
			PRO	92097203	ø 300 x 22 x 51.5		PRO	92141703	ø 294 x 19 x 60.5	
			PRO	92097205	ø 300 x 22 x 51.5			TPM0003		
				TPM0003				91049300	ø 185 x 20	
								97003100		
74300			Ate	2328702	[o] 23287 17.8		Ate	2193402	[o] 21934 17.3	
325 xi	09/00→02/05	141 / 192	Ate	2328781	[o] 23287 17.8		Ate	2193481	[o] 21934 17.3	
				98023900	L596			98024000	L1338	
			Ate	82039300			Ate	82028700		
			Ate	82062900			Ate	82062900		
			PRO	92097203	ø 300 x 22 x 51.5		PRO	92141703	ø 294 x 19 x 60.5	
			PRO	92097205	ø 300 x 22 x 51.5			TPM0003		

→

		kW / hp											
3 Touring (E46) 10/99→12/06													
74300				TPM0003						91049300	ø 185 x 20		
325 xi	09/00→02/05	141 / 192								97003100			
74400			Ate	2318302	[o] 23183 20.3				Ate	2148703	[o] 21487 17.2		
330 d	10/99→02/05	135 / 184											
330 d	03/03→02/05	150 / 204	Ate	2318381	[o] 23183 20.3					98024000	L1338		
330 i	06/00→02/05	170 / 231											
330 xd	06/00→02/05	135 / 184		98026900	L650				Ate	82062900			
330 xd	03/03→02/05	150 / 204											
330 xi	06/00→02/05	170 / 231	Ate	82028600						92107003	ø 320 x 22 x 60.5		
			Ate	82062900						TPM0003			
				92106900	ø 325 x 25 x 52.5					91049300	ø 185 x 20		
				92106903	ø 325 x 25 x 52.5					97003100			
				92106905	ø 325 x 25 x 52.5								
				TPM0003									
3 Touring (E91) 09/05→05/12													
74500			Ate	2409601	[o] 24096 20.3	⊖ M-technology			Ate	2392701	[o] 23927 17.3		
316 d	09/09→	85 / 116											
			Ate	2409681	[o] 24096 20.3	⊖ M-technology			Ate	2392781	[o] 23927 17.3		
			Bre	2431601	[o] 24316 17	⊕ M-technology				98031300	L1093	→03/10	
				98031200	L635	→03/10 ⊖ M-technology				98043900	L1110	03/10→	
				98043700	L650	03/10→ ⊖ M-technology			Ate	82028700			
				98046000	L695	⊕ M-technology			Ate	82062900			
			Bre	82504600		⊕ M-technology				92133003	ø 300 x 20 x 66.1	⊖ incr. payload	
			Ate	82062900		⊖ M-technology				92154903	ø 300 x 20 x 66	⊕ incr. payload	
			Ate	82074500		⊖ M-technology				TPM0003			
				92137703	ø 300 x 24 x 73.5	⊖ M-technology				91049300	ø 185 x 20	⊕ incr. payload	
				TPM0003						91053300	ø 160.5 x 20	⊖ incr. payload	
										97003100		⊕ incr. payload	
										97012600		⊖ incr. payload	
74600			Ate	2409601	[o] 24096 20.3	⊖ M-technology			Ate	2392701	[o] 23927 17.3	⊖ M-technology	
316 i	05/08→05/12	90 / 122											
			Ate	2409681	[o] 24096 20.3	⊖ M-technology			Ate	2392781	[o] 23927 17.3	⊖ M-technology	
			Bre	2431601	[o] 24316 17	⊕ M-technology			Bre	2431501	[o] 24315 16.9	⊕ M-technology	
				98031200	L635	→03/10 ⊖ M-technology				98031300	L1093	→03/10	
				98043700	L650	03/10→ ⊖ M-technology				98043900	L1110	03/10→	
				98046000	L695	⊕ M-technology			Bre	82504500		⊕ M-technology	
			Bre	82504600		⊕ M-technology			Ate	82028700		⊖ M-technology	
			Ate	82062900		⊖ M-technology			Ate	82062900		⊖ M-technology	
			Ate	82074500		⊖ M-technology				92133003	ø 300 x 20 x 66.1	⊖ M-technology 09/09→	
				92137703	ø 300 x 24 x 73.5	⊖ M-technology				92154903	ø 300 x 20 x 66	→09/09 ⊖ M-technology	
				TPM0003						TPM0003			
										91049300	ø 185 x 20	→09/09	
										91053300	ø 160.5 x 20	09/09→	
										97003100		→09/09	
										97012600		09/09→	

BMW

BMW

kW / hp

3 Touring (E91) 09/05→05/12

74700														
318 d	09/05→	90 / 122	Ate		2379401	[o] 23794	20.3	⊖ M-technology	Ate		2392701	[o] 23927	17.3	⊖ M-technology
			Ate	epad	2379481	[o] 23794	20.3	⊖ M-technology	Ate	epad	2392781	[o] 23927	17.3	⊖ M-technology
			Bre		2431601	[o] 24316	17	⊕ M-technology	Bre		2431501	[o] 24315	16.9	⊕ M-technology
					98031200	L635		⊖ M-technology →03/12			98031300	L1093		→03/10
					98043700	L650		03/10→ ⊖ M-technology			98043900	L1110		03/10→
					98046000	L695		⊕ M-technology	Bre		82504500			⊕ M-technology
			Bre		82504600			⊕ M-technology	Ate		82028700			⊖ M-technology
			Ate		82062900			⊖ M-technology	Ate		82062900			⊖ M-technology
			Ate		82074500			⊖ M-technology		PRO	92154903	ø 300 x 20 x 66		⊖ M-technology
				PRO	92137703	ø 300 x 24 x 73.5		⊖ M-technology			TPM0003			
					TPM0003						91049300	ø 185 x 20		
											97003100			
74800														
318 d	07/07→	100 / 136	Ate		2331301	[o] 23313	20.3	⊖ M-technology	Ate		2392701	[o] 23927	17.3	⊖ M-technology
320 i	09/07→	125 / 170	Ate	epad	2331381	[o] 23313	20.3	⊖ M-technology	Ate	epad	2392781	[o] 23927	17.3	⊖ M-technology
			Bre		2431601	[o] 24316	17	⊕ M-technology	Bre		2431501	[o] 24315	16.9	⊕ M-technology
					98043800	L723		⊖ M-technology 03/10→			98031300	L1093		→03/10
					98046000	L695		⊕ M-technology ⊖ M-technology →03/10			98043900	L1110		03/10→
			Bre		82504600			⊕ M-technology	Bre		82504500			⊕ M-technology
			Ate		82062900			⊖ M-technology	Ate		82028700			⊖ M-technology
			Ate		82074500			⊖ M-technology	Ate		82062900			⊖ M-technology
				PRO	92176103	ø 312 x 24 x 73.5		⊖ M-technology		PRO	92154903	ø 300 x 20 x 66		⊖ M-technology
					TPM0003						TPM0003			
											91049300	ø 185 x 20		
											97003100			
74900														
318 d	09/07→	105 / 143	Ate		2331301	[o] 23313	20.3	⊖ M-technology	Ate		2392701	[o] 23927	17.3	⊖ M-technology
			Ate	epad	2331381	[o] 23313	20.3	⊖ M-technology	Ate	epad	2392781	[o] 23927	17.3	⊖ M-technology
			Bre		2431601	[o] 24316	17	⊕ M-technology	Bre		2431501	[o] 24315	16.9	⊕ M-technology
					98043800	L723		⊖ M-technology 03/10→			98031300	L1093		→03/10
					98046000	L695		⊕ M-technology ⊖ M-technology →03/10			98043900	L1110		03/10→
			Bre		82504600			⊕ M-technology	Bre		82504500			⊕ M-technology
			Ate		82062900			⊖ M-technology	Ate		82028700			⊖ M-technology
			Ate		82074500			⊖ M-technology	Ate		82062900			⊖ M-technology
				PRO	92176103	ø 312 x 24 x 73.5		⊖ M-technology		PRO	92133003	ø 300 x 20 x 66.1		⊖ M-technology 09/09→
					TPM0003					PRO	92154903	ø 300 x 20 x 66		→09/09 ⊖ M-technology
											TPM0003			
											91049300	ø 185 x 20		→09/09
											91053300	ø 160.5 x 20		09/09→
											97003100			→09/09
											97012600			09/09→
75000														
318 i	01/06→	95 / 129	Ate		2379401	[o] 23794	20.3	⊖ M-technology	Ate		2392701	[o] 23927	17.3	⊖ M-technology
318 i	09/07→	100 / 136												

→

		kW / hp											
3 Touring (E91) 09/05→05/12													
75000			Ate		**2379481**	[o] 23794	20.3	⊖ M-technology	Ate		**2392781**	[o] 23927	17.3	⊖ M-technology
318 i	01/06→	95 / 129		epad						epad				
318 i	09/07→	100 / 136	Bre		**2431601**	[o] 24316	17	⊕ M-technology	Bre		**2431501**	[o] 24315	16.9	⊕ M-technology
					98031200	L635		→03/10 ⊖ M-technology			**98031300**	L1093		→03/10
					98043700	L650		03/10→ ⊖ M-technology			**98043900**	L1110		03/10→
					98046000	L695		⊕ M-technology	Bre		**82504500**			⊕ M-technology →09/09
			Bre		**82504600**			⊕ M-technology	Ate		**82028700**			⊖ M-technology
			Ate		**82062900**			⊖ M-technology	Ate		**82062900**			⊖ M-technology
			Ate		**82074500**			⊖ M-technology		PRO	**92154903**	ø 300 x 20 x 66		⊖ M-technology
				PRO	**92137703**	ø 300 x 24 x 73.5		⊖ M-technology			**TPM0003**			
					TPM0003						**91049300**	ø 185 x 20		
											97003100			
75100			Ate		**2331301**	[o] 23313	20.3	⊖ M-technology ⊕ incr. payload ⊖ incr. payload →02/08	Ate		**2392701**	[o] 23927	17.3	⊖ M-technology
318 i	09/07→	105 / 143	Ate	epad	**2331381**	[o] 23313	20.3	⊖ M-technology ⊕ incr. payload ⊖ incr. payload →02/08	Ate	epad	**2392781**	[o] 23927	17.3	⊖ M-technology
			Ate		**2409601**	[o] 24096	20.3	⊖ M-technology ⊖ incr. payload 02/08→	Bre		**2431501**	[o] 24315	16.9	⊕ M-technology
			Ate	epad	**2409681**	[o] 24096	20.3	⊖ M-technology ⊖ incr. payload 02/08→			**98031300**	L1093		→03/10
			Bre		**2431601**	[o] 24316	17	⊕ M-technology			**98043900**	L1110		03/10→
					98031200	L635		⊖ M-technology ⊖ incr. payload 02/08→ →03/10	Bre		**82504500**			⊕ M-technology
					98043700	L650		⊖ M-technology ⊖ incr. payload 03/10→	Ate		**82028700**			⊖ M-technology
					98043800	L723		⊖ M-technology ⊕ incr. payload 03/10→	Ate		**82062900**			⊖ M-technology
					98046000	L695		⊕ M-technology →03/10 ⊕ incr. payload		PRO	**92133003**	ø 300 x 20 x 66.1		09/09→ ⊖ M-technology ⊖ incr. payload
								⊖ M-technology ⊖ incr. payload →02/08		PRO	**92154903**	ø 300 x 20 x 66		⊖ M-technology ⊕ incr. payload →09/09 ⊖ incr. payload
			Bre		**82504600**			⊕ M-technology			**TPM0003**			
			Ate		**82062900**			⊖ M-technology			**91049300**	ø 185 x 20		→09/09
			Ate		**82074500**			⊖ M-technology			**91053300**	ø 160.5 x 20		09/09→
				PRO	**92137703**	ø 300 x 24 x 73.5		⊖ M-technology ⊖ incr. payload 02/08→			**97003100**			→09/09
				PRO	**92176103**	ø 312 x 24 x 73.5		⊖ M-technology ⊕ incr. payload →02/08 ⊖ incr. payload			**97012600**			09/09→
					TPM0003									
75200			Ate		**2379401**	[o] 23794	20.3	⊖ M-technology	Ate		**2355001**	[o] 23550	17.3	⊖ M-technology ⊕ governm. veh.
320 d	09/05→	110 / 150												
320 d	09/05→	120 / 163	Ate	epad	**2379481**	[o] 23794	20.3	⊖ M-technology	Ate	epad	**2355081**	[o] 23550	17.3	⊖ M-technology ⊕ governm. veh.
			Bre		**2431601**	[o] 24316	17	⊕ M-technology	Ate		**2392701**	[o] 23927	17.3	⊖ M-technology ⊖ governm. veh.
					98031200	L635		→03/10 ⊖ M-technology ⊖ governm. veh.	Ate	epad	**2392781**	[o] 23927	17.3	⊖ M-technology ⊖ governm. veh.
					98043700	L650		03/10→ ⊖ M-technology ⊖ governm. veh.	Bre		**2431501**	[o] 24315	16.9	⊕ M-technology
					98043800	L723		03/10→ ⊖ M-technology ⊕ governm. veh.			**98031300**	L1093		→03/10
					98046000	L695		⊕ M-technology →03/10 ⊕ governm. veh.			**98043900**	L1110		03/10→
			Bre		**82504600**			⊕ M-technology	Bre		**82504500**			⊕ M-technology
			Ate		**82062900**				Ate		**82028700**			⊖ M-technology ⊖ governm. veh.
			Ate		**82074500**			⊖ M-technology	Ate		**82057500**			⊖ M-technology ⊕ governm. veh.
				PRO	**92137703**	ø 300 x 24 x 73.5		⊖ governm. veh. ⊖ M-technology	Ate		**82062900**			
				PRO	**92137803**	ø 330 x 24 x 73		⊕ governm. veh. ⊖ M-technology		PRO	**92137903**	ø 336 x 22 x 67		⊕ governm. veh. ⊖ M-technology
					TPM0003					PRO	**92154903**	ø 300 x 20 x 66		⊖ governm. veh. ⊖ M-technology

BMW

BMW

30 kW / hp

3 Touring (E91) 09/05→05/12

75200														
320 d	09/05→	110 / 150									TPM0003			
320 d	09/05→	120 / 163									91049300	ø 185 x 20		
											97003100			
75300														
320 d	09/07→	130 / 177	Ate		2331301	[o] 23313 20.3	⊖ M-technology ⊖ governm. veh.	Ate		2355001	[o] 23550 17.3	⊖ M-technology ⊕ governm. veh.		
			Ate	epad	2331381	[o] 23313 20.3	⊖ M-technology ⊖ governm. veh.	Ate	epad	2355081	[o] 23550 17.3	⊖ M-technology ⊕ governm. veh.		
			Ate		2379401	[o] 23794 20.3	⊖ M-technology ⊕ governm. veh.	Ate		2392701	[o] 23927 17.3	⊖ M-technology ⊖ governm. veh.		
			Ate	epad	2379481	[o] 23794 20.3	⊖ M-technology ⊕ governm. veh.	Ate	epad	2392781	[o] 23927 17.3	⊖ M-technology ⊖ governm. veh.		
			Bre		2431601	[o] 24316 17	⊕ M-technology	Bre		2431501	[o] 24315 16.9	⊕ M-technology		
					98031200	L635	→03/10 ⊖ M-technology ⊖ governm. veh.			98031300	L1093	→03/10		
					98043800	L723	⊖ M-technology 03/10→			98043900	L1110	03/10→		
					98046000	L695	⊕ M-technology →03/10 ⊕ governm. veh.	Bre		82504500		⊕ M-technology		
			Bre		82504600		⊕ M-technology	Ate		82028700		⊖ M-technology ⊖ governm. veh.		
			Ate		82062900			Ate		82057500		⊖ M-technology ⊕ governm. veh.		
			Ate		82074500		⊖ M-technology	Ate		82062900				
				PRO	92137803	ø 330 x 24 x 73	⊕ governm. veh. ⊖ M-technology		PRO	92137903	ø 336 x 22 x 67	⊕ governm. veh. ⊖ M-technology		
				PRO	92176103	ø 312 x 24 x 73.5	⊖ governm. veh. ⊖ M-technology		PRO	92154903	ø 300 x 20 x 66	⊖ governm. veh. ⊖ M-technology		
					TPM0003					TPM0003				
										91049300	ø 185 x 20			
										97003100				
75400														
320 d	01/10→	135 / 184	Ate		2331301	[o] 23313 20.3	⊖ M-technology ⊖ governm. veh.	Ate		2355001	[o] 23550 17.3	⊕ governm. veh.		
			Ate	epad	2331381	[o] 23313 20.3	⊖ M-technology ⊖ governm. veh.	Ate	epad	2355081	[o] 23550 17.3	⊕ governm. veh.		
			Ate		2379401	[o] 23794 20.3	⊖ M-technology ⊕ governm. veh.	Ate		2392701	[o] 23927 17.3	⊖ governm. veh.		
			Ate	epad	2379481	[o] 23794 20.3	⊖ M-technology ⊕ governm. veh.	Ate	epad	2392781	[o] 23927 17.3	⊖ governm. veh.		
			Bre		2431601	[o] 24316 17	⊕ M-technology ⊖ governm. veh.			98031300	L1093	→03/10		
					98031200	L635	→03/10 ⊕ governm. veh.			98043900	L1110	03/10→		
					98043700	L650	03/10→ ⊕ governm. veh.	Ate		82028700		⊖ governm. veh.		
					98043800	L723	03/10→ ⊖ governm. veh. ⊕ M-technology	Ate		82057500		⊕ governm. veh.		
					98046000	L695	→03/10 ⊖ governm. veh.	Ate		82062900				
			Bre		82504600		⊕ M-technology		PRO	92133003	ø 300 x 20 x 66.1	⊖ governm. veh. ⊖ incr. payload ⊖ act. steering		
			Ate		82062900		⊖ M-technology		PRO	92137903	ø 336 x 22 x 67	⊕ governm. veh. ⊖ act. steering ⊖ incr. payload		
			Ate		82074500				PRO	92154903	ø 300 x 20 x 66	⊖ governm. veh. ⊕ incr. payload ⊕ act. steering		
				PRO	92137803	ø 330 x 24 x 73	⊕ governm. veh. ⊖ M-technology			TPM0003				
				PRO	92176103	ø 312 x 24 x 73.5	⊖ governm. veh. ⊖ M-technology			91049300	ø 185 x 20	⊕ governm. veh. ⊕ incr. payload ⊕ act. steering		
					TPM0003					91053300	ø 160.5 x 20	⊖ governm. veh. ⊖ incr. payload ⊖ act. steering		
										97003100		⊕ governm. veh. ⊕ incr. payload ⊕ act. steering		
										97012600		⊖ governm. veh. ⊖ incr. payload ⊖ act. steering		
75500														
320 d xDrive	09/08→	130 / 177	Ate		2331301	[o] 23313 20.3	⊖ governm. veh.	Ate		2355001	[o] 23550 17.3	⊕ governm. veh.		
320 d xDrive	07/09→	120 / 163												
320 d xDrive	01/10→	135 / 184	Ate	epad	2331381	[o] 23313 20.3	⊖ governm. veh.	Ate	epad	2355081	[o] 23550 17.3	⊕ governm. veh.		
320 xd	09/07→	130 / 177	Ate		2379401	[o] 23794 20.3	⊕ governm. veh.	Ate		2392701	[o] 23927 17.3	⊖ governm. veh.		
			Ate	epad	2379481	[o] 23794 20.3	⊕ governm. veh.	Ate	epad	2392781	[o] 23927 17.3	⊖ governm. veh.		

→

kW / hp

3 Touring (E91) 09/05→05/12

75500													
320 d xDrive	09/08→	130 / 177			98035500	L850	→03/10 ⊖ governm. veh.			98031300	L1093	→03/10
320 d xDrive	07/09→	120 / 163			98043800	L723	03/10→ ⊕ governm. veh.			98043900	L1110	03/10→
320 d xDrive	01/10→	135 / 184			98044300	L865	03/10→ ⊖ governm. veh.	Ate		82028700		⊖ governm. veh.
320 xd	09/07→	130 / 177			98046000	L695	→03/10 ⊕ governm. veh.	Ate		82057500		⊕ governm. veh.
			Ate		82062900			Ate		82062900		
			Ate		82074500				PRO	92137903	ø 336 x 22 x 67	⊕ governm. veh.
				PRO	92137803	ø 330 x 24 x 73	⊕ governm. veh.		PRO	92154903	ø 300 x 20 x 66	⊖ governm. veh.
				PRO	92176103	ø 312 x 24 x 73.5	⊖ governm. veh.			TPM0003		
					TPM0003					91049300	ø 185 x 20	
										97003100		
75600													
320 i	09/05→	110 / 150	Ate		2379401	[o] 23794 20.3	⊖ M-technology	Ate		2392701	[o] 23927 17.3	⊖ M-technology
			Ate	epad	2379481	[o] 23794 20.3	⊖ M-technology	Ate	epad	2392781	[o] 23927 17.3	⊖ M-technology
			Bre		2431601	[o] 24316 17	⊕ M-technology	Bre		2431501	[o] 24315 16.9	⊕ M-technology
					98031200	L635	→03/10 ⊖ M-technology			98031300	L1093	→03/10
					98043700	L650	03/10→ ⊖ M-technology			98043900	L1110	03/10→
					98046000	L695	⊕ M-technology	Bre		82504500		⊕ M-technology
			Bre		82504600		⊕ M-technology	Ate		82028700		⊖ M-technology
			Ate		82062900			Ate		82062900		
			Ate		82074500		⊖ M-technology	Luc		82063300		
				PRO	92137703	ø 300 x 24 x 73.5	⊖ M-technology		PRO	92154903	ø 300 x 20 x 66	⊖ M-technology
					TPM0003					TPM0003		
										91049300	ø 185 x 20	
										97003100		
75700													
320 i	09/05→	115 / 156	Ate		2331301	[o] 23313 20.3		Ate		2392701	[o] 23927 17.3	
			Ate	epad	2331381	[o] 23313 20.3		Ate	epad	2392781	[o] 23927 17.3	
					98043800	L723	→03/10			98031300	L1093	→03/10
					98046000	L695	03/10→			98043900	L1110	03/10→
			Ate		82062900			Ate		82028700		
			Ate		82074500			Ate		82062900		
				PRO	92176103	ø 312 x 24 x 73.5			PRO	92154903	ø 300 x 20 x 66	
					TPM0003					TPM0003		
										91049300	ø 185 x 20	
										97003100		
75800													
323 i	04/06→06/07	130 / 177	Ate		2331301	[o] 23313 20.3	⊖ M-technology	Ate		2392701	[o] 23927 17.3	⊖ M-technology
			Ate	epad	2331381	[o] 23313 20.3	⊖ M-technology	Ate	epad	2392781	[o] 23927 17.3	⊖ M-technology
			Bre		2431601	[o] 24316 17	⊕ M-technology	Bre		2431501	[o] 24315 16.9	⊕ M-technology
					98031200	L635	⊖ M-technology			98031300	L1093	
					98046000	L695	⊕ M-technology	Bre		82504500		⊕ M-technology
			Bre		82504600		⊕ M-technology	Ate		82028700		⊖ M-technology
			Ate		82062900		⊖ M-technology	Ate		82062900		⊖ M-technology

BMW

BMW

30 kW / hp

3 Touring (E91) 09/05→05/12

75800													
323 i	04/06→06/07	130 / 177	Ate		82074500		⊖ M-technology		PRO	92154903	ø 300 x 20 x 66	⊖ M-technology
				PRO	92137703	ø 300 x 24 x 73.5	⊖ M-technology			TPM0003		
					TPM0003					91049300	ø 185 x 20	
										97003100		
75900													
325 d	09/06→	145 / 197	Ate		2331303	[–] 23313 20.3	⊕ governm. veh.	Ate		2355001	[o] 23550 17.3	⊖ M-technology
			Ate	epad	2331382	[o] 23313 20.3	⊕ governm. veh.	Ate	epad	2355081	[o] 23550 17.3	⊖ M-technology
			Ate		2379401	[o] 23794 20.3	⊖ M-technology ⊖ governm. veh.	Bre		2431501	[o] 24315 16.9	⊕ M-technology
			Ate	epad	2379481	[o] 23794 20.3	⊖ M-technology ⊖ governm. veh.			98031300	L1093	
			Bre		2431601	[o] 24316 17	⊕ M-technology ⊖ governm. veh.	Bre		82504500		⊕ M-technology
					98031200	L635	⊖ M-technology ⊖ governm. veh.	Ate		82057500		
					98046000	L695	⊕ M-technology ⊕ governm. veh.	Ate		82062900		⊖ M-technology
			Bre		82504600		⊕ M-technology		PRO	92137903	ø 336 x 22 x 67	⊖ M-technology
			Ate		82062900		⊖ M-technology ⊖ governm. veh.			TPM0003		
			Ate		82072000		⊕ M-technology ⊕ governm. veh.			91049300	ø 185 x 20	
			Ate		82074500		⊖ M-technology ⊖ governm. veh.			97003100		
				PRO	92137803	ø 330 x 24 x 73	⊖ governm. veh. ⊖ M-technology					
				PRO	92155303	ø 348 x 30 x 73.2	⊕ governm. veh. ⊖ M-technology					
					TPM0003							
76000													
325 d	04/10→	150 / 204	Ate		2331303	[–] 23313 20.3	⊖ M-technology ⊕ governm. veh.	Ate		2355001	[o] 23550 17.3	⊖ M-technology
			Ate	epad	2331382	[o] 23313 20.3	⊖ M-technology ⊕ governm. veh.	Ate	epad	2355081	[o] 23550 17.3	⊖ M-technology
			Ate		2379401	[o] 23794 20.3	⊖ M-technology ⊖ governm. veh.	Bre		2431501	[o] 24315 16.9	⊕ M-technology
			Ate	epad	2379481	[o] 23794 20.3	⊖ M-technology ⊖ governm. veh.			98043900	L1110	
			Bre		2431601	[o] 24316 17	⊕ M-technology	Bre		82504500		⊕ M-technology
					98043800	L723		Ate		82057500		⊕ governm. veh.
			Bre		82504600		⊕ M-technology	Ate		82062900		⊖ M-technology
			Ate		82062900		⊖ M-technology ⊖ governm. veh.		PRO	92137903	ø 336 x 22 x 67	⊖ M-technology
			Ate		82074500		⊖ M-technology			TPM0003		
				PRO	92137803	ø 330 x 24 x 73	⊖ governm. veh. ⊖ M-technology			91049300	ø 185 x 20	
				PRO	92155303	ø 348 x 30 x 73.2	⊕ governm. veh. ⊖ M-technology			97003100		
					TPM0003							
76100													
325 i	09/05→	160 / 218	Ate		2379401	[o] 23794 20.3	⊖ M-technology	Ate		2355001	[o] 23550 17.3	⊕ incr. payload ⊖ M-technology
			Ate	epad	2379481	[o] 23794 20.3	⊖ M-technology	Ate	epad	2355081	[o] 23550 17.3	⊕ incr. payload ⊖ M-technology
			Bre		2431601	[o] 24316 17	⊕ M-technology	Ate		2392701	[o] 23927 17.3	⊖ incr. payload ⊖ M-technology
					98031200	L635	⊖ M-technology ⊖ incr. payload	Ate	epad	2392781	[o] 23927 17.3	⊖ incr. payload ⊖ M-technology
					98046000	L695	⊕ M-technology ⊕ incr. payload	Bre		2431501	[o] 24315 16.9	⊕ M-technology
			Bre		82504600		⊕ M-technology			98031300	L1093	
			Ate		82062900			Bre		82504500		⊕ M-technology
			Ate		82074500		⊖ M-technology	Ate		82028700		⊖ incr. payload Ø 300 mm ⊖ M-technology
				PRO	92137703	ø 300 x 24 x 73.5	⊖ incr. payload ⊖ M-technology	Ate		82057500		⊕ incr. payload
				PRO	92137803	ø 330 x 24 x 73	⊕ incr. payload ⊖ M-technology	Ate		82062900		

→

kW / hp

3 Touring (E91) 09/05→05/12

76100													
325 i 09/05→ 160 / 218			TPM0003					PRO	92137903	ø 336 x 22 x 67	⊕ incr. payload ⊖ M-technology
								PRO	92154903	ø 300 x 20 x 66	⊖ incr. payload ⊖ M-technology
									TPM0003		
									91049300	ø 185 x 20	
									97003100		
76200													
325 i 09/07→ 160 / 218	Ate		2331301	[o]	23313	20.3	⊖ incr. payload ⊖ M-technology	Ate	2355001	[o] 23550	17.3	⊕ incr. payload ⊖ M-technology
	Ate	epad	2331381	[o]	23313	20.3	⊖ incr. payload ⊖ M-technology	Ate	2355081	[o] 23550	17.3	⊕ incr. payload ⊖ M-technology
	Ate		2379401	[o]	23794	20.3	⊕ incr. payload ⊖ M-technology	Ate	2392701	[o] 23927	17.3	⊖ incr. payload ⊖ M-technology
	Ate	epad	2379481	[o]	23794	20.3	⊕ incr. payload ⊖ M-technology	Ate	2392781	[o] 23927	17.3	⊖ incr. payload ⊖ M-technology
	Bre		2431601	[o]	24316	17	⊕ M-technology	Bre	2431501	[o] 24315	16.9	⊕ M-technology
			98031200	L635			⊖ M-technology ⊖ incr. payload →03/10		98031300	L1093		→03/10
			98043800	L723			⊖ M-technology 03/10→		98043900	L1110		03/10→
			98046000	L695			⊕ M-technology ⊕ incr. payload →03/10	Bre	82504500			⊕ M-technology
	Bre		82504600				⊕ M-technology	Ate	82028700			⊖ incr. payload ⊖ M-technology
	Ate		82062900				⊖ M-technology	Ate	82057500			⊖ M-technology ⊕ incr. payload
	Ate		82074500				⊖ M-technology	Ate	82062900			⊖ M-technology
		PRO	92137803	ø 330 x 24 x 73			⊕ incr. payload ⊖ M-technology	PRO	92137903	ø 336 x 22 x 67		⊕ incr. payload ⊖ M-technology
		PRO	92176103	ø 312 x 24 x 73.5			⊖ M-technology ⊖ incr. payload	PRO	92154903	ø 300 x 20 x 66		⊖ incr. payload ⊖ M-technology
			TPM0003						TPM0003			
									91049300	ø 185 x 20		
									97003100			
76300													
325 i 01/12→ 155 / 211	Ate		2331301	[o]	23313	20.3	⊖ incr. payload ⊖ M-technology	Ate	2355001	[o] 23550	17.3	⊕ incr. payload ⊖ M-technology
	Ate	epad	2331381	[o]	23313	20.3	⊖ incr. payload ⊖ M-technology	Ate	2355081	[o] 23550	17.3	⊕ incr. payload ⊖ M-technology
	Ate		2379401	[o]	23794	20.3	⊕ incr. payload ⊖ M-technology	Ate	2392701	[o] 23927	17.3	⊖ incr. payload ⊖ M-technology
	Ate	epad	2379481	[o]	23794	20.3	⊕ incr. payload ⊖ M-technology	Ate	2392781	[o] 23927	17.3	⊖ incr. payload ⊖ M-technology
	Bre		2431601	[o]	24316	17	⊕ M-technology	Bre	2431501	[o] 24315	16.9	⊕ M-technology
			98043800	L723			⊖ M-technology		98043900	L1110		
			98046000	L695			⊕ M-technology	Bre	82504500			⊕ M-technology
	Bre		82504600				⊕ M-technology	Ate	82028700			⊖ incr. payload ⊖ M-technology
	Ate		82062900				⊖ M-technology	Ate	82057500			⊖ M-technology ⊕ incr. payload
	Ate		82074500				⊖ M-technology	Ate	82062900			⊖ M-technology
		PRO	92137803	ø 330 x 24 x 73			⊕ incr. payload ⊖ M-technology	PRO	92137903	ø 336 x 22 x 67		⊕ incr. payload ⊖ M-technology
		PRO	92176103	ø 312 x 24 x 73.5			⊖ M-technology ⊖ incr. payload	PRO	92154903	ø 300 x 20 x 66		⊖ incr. payload ⊖ M-technology
			TPM0003						TPM0003			
									91049300	ø 185 x 20		
									97003100			
76400													
325 i xDrive 09/08→ 160 / 218 325 xi 09/07→ 160 / 218	Ate		2379401	[o]	23794	20.3		Ate	2355001	[o] 23550	17.3	
	Ate	epad	2379481	[o]	23794	20.3		Ate	2355081	[o] 23550	17.3	
			98035500	L850			→03/10		98031300	L1093		→03/10
			98044300	L865			03/10→		98043900	L1110		03/10→

BMW

BMW

30 kW / hp

3 Touring (E91) 09/05→05/12

76400													
325 i xDrive	09/08→	160 / 218	Ate		82062900			Ate		82057500			
325 xi	09/07→	160 / 218	Ate		82074500			Ate		82062900			
				PRO	92137803	ø 330 x 24 x 73			PRO	92137903	ø 336 x 22 x 67		
					TPM0003					TPM0003			
										91049300	ø 185 x 20		
										97003100			
76500													
325 xi	09/05→	160 / 218	Ate		2331301	[o] 23313 20.3	⊖ incr. payload	Ate		2355001	[o] 23550 17.3	⊕ incr. payload	
			Ate	epad	2331381	[o] 23313 20.3	⊖ incr. payload	Ate	epad	2355081	[o] 23550 17.3	⊕ incr. payload	
			Ate		2379401	[o] 23794 20.3	⊕ incr. payload	Ate		2392701	[o] 23927 17.3	⊖ incr. payload	
			Ate	epad	2379481	[o] 23794 20.3	⊕ incr. payload	Ate	epad	2392781	[o] 23927 17.3	⊖ incr. payload	
					98035500	L850	→03/10			98031300	L1093	→03/10	
					98044300	L865	03/10→			98043900	L1110	03/10→	
			Ate		82062900			Ate		82028700		⊖ incr. payload	
			Ate		82074500		⊖ incr. payload	Ate		82057500		⊕ incr. payload	
				PRO	92137803	ø 330 x 24 x 73	⊕ incr. payload	Ate		82062900			
				PRO	92176103	ø 312 x 24 x 73.5	⊖ incr. payload		PRO	92137903	ø 336 x 22 x 67	⊕ incr. payload	
					TPM0003				PRO	92154903	ø 300 x 20 x 66	⊖ incr. payload	
										TPM0003			
										91049300	ø 185 x 20		
										97003100			
76600													
328 i	03/07→	171 / 234	Ate		2331301	[o] 23313 20.3	⊖ M-technology	Ate		2392701	[o] 23927 17.3		
			Ate	epad	2331381	[o] 23313 20.3	⊖ M-technology	Ate	epad	2392781	[o] 23927 17.3		
			Bre		2431601	[o] 24316 17	⊕ M-technology			98031300	L1093	→03/10	
					98046000	L695				98043900	L1110	03/10→	
			Bre		82504600		⊕ M-technology	Ate		82028700			
			Ate		82074500		⊖ M-technology	Ate		82062900			
				PRO	92176103	ø 312 x 24 x 73.5	⊖ M-technology		PRO	92133003	ø 300 x 20 x 66.1		
					TPM0003					TPM0003			
										91053300	ø 160.5 x 20		
										97012600			
76700													
328 i xDrive	09/08→12/10	171 / 234	Ate		2331301	[o] 23313 20.3				98031300	L1093	→2010-03	
			Ate	epad	2331381	[o] 23313 20.3				98043900	L1110	2010-03→	
					98043800	L723	2010-03→	Ate		82028700			
					98046000	L695	→2010-03		PRO	92154903	ø 300 x 20 x 66		
			Ate		82074500					TPM0003			
				PRO	92176103	ø 312 x 24 x 73.5				91049300	ø 185 x 20		
					TPM0003					97003100			
76800													
328 xi	09/06→12/08	171 / 234	Ate		2331301	[o] 23313 20.3		Ate		2392701	[o] 23927 17.3		
			Ate	epad	2331381	[o] 23313 20.3		Ate	epad	2392781	[o] 23927 17.3		
					98046000	L695				98031300	L1093		

→

kW / hp

3 Touring (E91) 09/05→05/12

76800													
328 xi	09/06→12/08	171 / 234	Ate		82074500			Ate		82028700			
				PRO	92137703	ø 300 x 24 x 73.5	→2007-09		PRO	92133003	ø 300 x 20 x 66.1	
				PRO	92176103	ø 312 x 24 x 73.5	2007-09→			TPM0003		
					TPM0003					91049300	ø 185 x 20	
										97003100		
76900													
330 d	09/05→	170 / 231	Ate		2331303	[–] 23313 20.3	09/07→	Ate		2355001	[o] 23550 17.3	
			Ate	epad	2331382	[o] 23313 20.3	09/07→	Ate	epad	2355081	[o] 23550 17.3	
			Ate		2379401	[o] 23794 20.3	→09/07			98031300	L1093	→03/10
			Ate	epad	2379481	[o] 23794 20.3	→09/07			98043900	L1110	03/10→
					98043800	L723	03/10→	Ate		82057500		
					98046000	L695	→03/10	Ate		82062900		
			Ate		82062900		→09/07		PRO	92137903	ø 336 x 22 x 67	
			Ate		82072000		09/07→			TPM0003		
			Ate		82074500		→09/07			91049300	ø 185 x 20	
				PRO	92137803	ø 330 x 24 x 73	→09/07			97003100		
				PRO	92155303	ø 348 x 30 x 73.2	09/07→					
					TPM0003							
77000													
330 d	01/09→	180 / 245	Ate		2331303	[–] 23313 20.3	⊖ M-technology ⊕ incr. payload →09/09 ⊖ incr. payload	Ate		2355001	[o] 23550 17.3	⊖ M-technology
330 i	09/07→	200 / 272	Ate	epad	2331382	[o] 23313 20.3	⊖ M-technology ⊕ incr. payload →09/09 ⊖ incr. payload	Ate	epad	2355081	[o] 23550 17.3	⊖ M-technology
			Ate		2379401	[o] 23794 20.3	⊖ M-technology 09/09→ ⊖ incr. payload	Bre		2431501	[o] 24315 16.9	⊕ M-technology
			Ate	epad	2379481	[o] 23794 20.3	⊖ M-technology 09/09→ ⊖ incr. payload			98031300	L1093	→03/10
			Bre		2431601	[o] 24316 17	⊕ M-technology			98043900	L1110	03/10→
					98043800	L723	⊖ M-technology 03/10→	Bre		82504500		⊕ M-technology
					98046000	L695	⊖ M-technology →03/10 ⊖ M-technology	Ate		82057500		⊖ M-technology
			Bre		82504600		⊕ M-technology	Ate		82062900		⊖ M-technology
			Ate		82062900		⊖ M-technology 09/09→ ⊖ incr. payload		PRO	92137903	ø 336 x 22 x 67	⊖ M-technology
			Ate		82072000		⊖ M-technology ⊕ incr. payload →09/09 ⊖ incr. payload			TPM0003		
			Ate		82074500		⊖ M-technology 09/09→ ⊖ incr. payload			91049300	ø 185 x 20	
				PRO	92137803	ø 330 x 24 x 73	⊖ M-technology 09/09→ ⊖ incr. payload			97003100		
				PRO	92155303	ø 348 x 30 x 73.2	⊖ M-technology ⊕ incr. payload →09/09 ⊖ incr. payload					
					TPM0003							
77100													
330 d xDrive	01/09→	180 / 245	Ate		2331303	[–] 23313 20.3	⊕ incr. payload ⊖ incr. payload →09/09	Ate		2355001	[o] 23550 17.3	
330 xi	09/07→	200 / 272	Ate	epad	2331382	[o] 23313 20.3	⊕ incr. payload ⊖ incr. payload →09/09	Ate	epad	2355081	[o] 23550 17.3	
335 xi	09/07→	225 / 306	Ate		2379401	[o] 23794 20.3	09/09→ ⊖ incr. payload			98031300	L1093	→03/10
			Ate	epad	2379481	[o] 23794 20.3	09/09→ ⊖ incr. payload			98043900	L1110	03/10→
					98035500	L850	→03/10	Ate		82057500		
					98044300	L865	03/10→	Ate		82062900		
			Ate		82062900		09/09→ ⊖ incr. payload		PRO	92137903	ø 336 x 22 x 67	
			Ate		82072000		⊕ incr. payload →09/09 ⊖ incr. payload			TPM0003		
			Ate		82074500		09/09→ ⊖ incr. payload			91049300	ø 185 x 20	

BMW

BMW

kW / hp

3 Touring (E91) 09/05→05/12

77100														
330 d xDrive	01/09→	180 / 245		PRO	92137803	ø 330 x 24 x 73	09/09→ ⊖ incr. payload				97003100			
330 xi	09/07→	200 / 272		PRO	92155303	ø 348 x 30 x 73.2	⊕ incr. payload →09/09 ⊖ incr. payload							
335 xi	09/07→	225 / 306			TPM0003									
77200			Ate		2331303	[–] 23313 20.3	09/07→ ⊕ incr. payload	Ate		2355001	[o] 23550 17.3	
330 i	09/05→	190 / 258	Ate	epad	2331382	[o] 23313 20.3	09/07→ ⊕ incr. payload	Ate	epad	2355081	[o] 23550 17.3	
			Ate		2379401	[o] 23794 20.3	⊖ incr. payload →09/07 ⊕ incr. payload			98031300	L1093	→03/10
			Ate	epad	2379481	[o] 23794 20.3	⊖ incr. payload →09/07 ⊕ incr. payload			98043900	L1110	03/10→
					98031200	L635	→03/10 ⊖ incr. payload	Ate		82057500		
					98043700	L650	03/10→ ⊖ incr. payload	Ate		82062900		
					98043800	L723	03/10→ ⊕ incr. payload		PRO	92137903	ø 336 x 22 x 67	
					98046000	L695	→03/10 ⊕ incr. payload			TPM0003		
			Ate		82062900		⊖ incr. payload →09/07 ⊕ incr. payload			91049300	ø 185 x 20	
			Ate		82072000		09/07→ ⊕ incr. payload			97003100		
			Ate		82074500		⊖ incr. payload →09/07 ⊕ incr. payload					
				PRO	92137803	ø 330 x 24 x 73	⊖ incr. payload →09/07 ⊕ incr. payload					
				PRO	92155303	ø 348 x 30 x 73.2	09/07→ ⊕ incr. payload					
					TPM0003							
77300			Ate		2331303	[–] 23313 20.3	⊕ incr. payload ⊖ incr. payload →09/09	Ate		2355001	[o] 23550 17.3	
330 i xDrive	09/08→	200 / 272	Ate	epad	2331382	[o] 23313 20.3	⊕ incr. payload ⊖ incr. payload →09/09	Ate	epad	2355081	[o] 23550 17.3	
			Ate		2379401	[o] 23794 20.3	09/09→ ⊖ incr. payload			98031300	L1093	→03/10
			Ate	epad	2379481	[o] 23794 20.3	09/09→ ⊖ incr. payload			98043900	L1110	03/10→
					98035500	L850	→03/10	Ate		82057500		
					98044300	L865	03/10→	Ate		82062900		
			Ate		82062900		09/09→ ⊖ incr. payload		PRO	92137903	ø 336 x 22 x 67	
			Ate		82072000		⊕ incr. payload →09/09 ⊖ incr. payload			TPM0003		
			Ate		82074500		09/09→ ⊖ incr. payload			91049300	ø 185 x 20	
				PRO	92137803	ø 330 x 24 x 73	09/09→ ⊖ incr. payload			97003100		
				PRO	92155303	ø 348 x 30 x 73.2	⊕ incr. payload →09/09 ⊖ incr. payload					
					TPM0003							
77400			Ate		2331303	[–] 23313 20.3	09/07→	Ate		2355001	[o] 23550 17.3	
330 xd	09/05→	170 / 231	Ate	epad	2331382	[o] 23313 20.3	09/07→	Ate	epad	2355081	[o] 23550 17.3	
			Ate		2379401	[o] 23794 20.3	→09/07			98031300	L1093	
			Ate	epad	2379481	[o] 23794 20.3	→09/07	Ate		82057500		
					98035500	L850		Ate		82062900		
			Ate		82062900		→09/07		PRO	92137903	ø 336 x 22 x 67	
			Ate		82072000		09/07→			TPM0003		
			Ate		82074500		→09/07			91049300	ø 185 x 20	
				PRO	92137803	ø 330 x 24 x 73	→09/07			97003100		
				PRO	92155303	ø 348 x 30 x 73.2	09/07→					
					TPM0003							

→

3 Touring (E91) 09/05→05/12

330 xi	09/05→	77500 190 / 258	Ate		2331303	[–] 23313 20.3	09/07→ ⊕ incr. payload	Ate		2355001	[o] 23550 17.3	
			Ate	epad	2331382	[o] 23313 20.3	09/07→ ⊕ incr. payload	Ate	epad	2355081	[o] 23550 17.3	
			Ate		2379401	[o] 23794 20.3	⊖ incr. payload →09/07 ⊕ incr. payload			98031300	L1093	→03/10
			Ate	epad	2379481	[o] 23794 20.3	⊖ incr. payload →09/07 ⊕ incr. payload			98043900	L1110	03/10→
					98035500	L850	→03/10	Ate		82057500		
					98044300	L865	03/10→	Ate		82062900		
			Ate		82062900		⊖ incr. payload →09/07 ⊕ incr. payload		PRO	92137903	ø 336 x 22 x 67	
			Ate		82072000		09/07→ ⊕ incr. payload			TPM0003		
			Ate		82074500		⊖ incr. payload →07/09 ⊕ incr. payload			91049300	ø 185 x 20	
				PRO	92137803	ø 330 x 24 x 73	⊖ incr. payload →09/07 ⊕ incr. payload			97003100		
				PRO	92155303	ø 348 x 30 x 73.2	09/07→ ⊕ incr. payload					
					TPM0003							
335 d 335 i	09/06→ 09/06→	77600 210 / 286 225 / 306	Ate		2331303	[–] 23313 20.3		Ate		2355001	[o] 23550 17.3	
			Ate	epad	2331382	[o] 23313 20.3		Ate	epad	2355081	[o] 23550 17.3	
					98043800	L723	03/10→			98031300	L1093	→03/10
					98046000	L695	→03/10			98043900	L1110	03/10→
			Ate		82072000			Ate		82057500		
				PRO	92155303	ø 348 x 30 x 73.2		Ate		82062900		
					TPM0003				PRO	92137903	ø 336 x 22 x 67	
										TPM0003		
										91049300	ø 185 x 20	
										97003100		
335 i xDrive	09/08→	77700 225 / 306	Ate		2331303	[–] 23313 20.3		Ate		2355001	[o] 23550 17.3	
			Ate	epad	2331382	[o] 23313 20.3		Ate	epad	2355081	[o] 23550 17.3	
					98035500	L850	→03/10			98031300	L1093	→03/10
					98044300	L865	03/10→			98043900	L1110	03/10→
			Ate		82072000			Ate		82057500		
				PRO	92155303	ø 348 x 30 x 73.2		Ate		82062900		
					TPM0003				PRO	92137903	ø 336 x 22 x 67	
										TPM0003		
										91049300	ø 185 x 20	
										97003100		

3 Touring (F31) 10/11→07/13

316 d 316 i 318 d	06/12→ 03/13→ 06/12→	77800 85 / 116 100 / 136 105 / 143	Ate		2550601	[o] 25506 18.2	⊖ M-technology ⊖ perform. brk. sys.	Ate		2502902	[o] 25029 17	⊕ perform. brk. sys.
					98047500	L675	left	Ate		2530701	[o] 25307 17.2	⊖ perform. brk. sys.
			Ate		82062900					98047600	L1045	
				PRO	92238503	ø 300 x 22 x 73.2	⊖ M-technology ⊖ perform. brk. sys.	Ate		82062900		
					TPM0003					TPM0003		
										91053300	ø 160.5 x 20	
										97012600		

BMW

BMW

		kW / hp											
3 Touring (F31) 10/11→07/13													
		77900	Ate		**2550601**	[0] 25506 18.2	⊖ M-technology	Ate		**2502902**	[0] 25029 17	⊕ perform. brk. sys.
318 d xDrive	01/13→	105 / 143			**98047500**	L675	left	Ate		**2530701**	[0] 25307 17.2	⊖ perform. brk. sys.
			Ate		**82062900**					**98047600**	L1045	
				PRO	**92238503**	ø 300 x 22 x 73.2	⊖ M-technology ⊖ perform. brk. sys.	Ate		**82062900**		
					TPM0003				PRO	**92239703**	ø 300 x 20 x 66	⊖ M-technology ⊖ perform. brk. sys. →04/13
										TPM0003		
										91049300	ø 185 x 20	
										97003100		
		78000	Bos		**2519901**	[0] 25199 19.2	⊖ M-technology ⊖ reinf.brake	Ate		**2502902**	[0] 25029 17	⊕ M-technology
320 d	10/11→	147 / 200			**98047500**	L675		Ate		**2530701**	[0] 25307 17.2	⊖ M-technology ⊖ reinf.brake
320 d xDrive	01/13→	147 / 200	Ate		**82517800**		⊖ M-technology ⊖ reinf.brake	Ate		**2551401**	[0] 25514 18.3	⊖ M-technology ⊕ reinf.brake
				PRO	**92176103**	ø 312 x 24 x 73.5	⊖ M-technology ⊖ perform. brk. sys.			**98047600**	L1045	
					TPM0003				PRO	**92239703**	ø 300 x 20 x 66	⊖ M-technology ⊖ reinf.brake ⊖ perform. brk. sys. →04/13
									PRO	**92241903**	ø 330 x 20 x 66.2	⊖ M-technology ⊕ reinf.brake ⊖ perform. brk. sys.
										TPM0003		
										91049300	ø 185 x 20	
										97003100		
		78100	Bos		**2519901**	[0] 25199 19.2	⊖ M-technology	Ate		**2502902**	[0] 25029 17	⊕ perform. brk. sys.
320 d	06/12→	120 / 163			**98047500**	L675	left	Ate		**2530701**	[0] 25307 17.2	⊖ perform. brk. sys.
320 d xDrive	06/12→	135 / 184	Ate		**82517800**		⊖ M-technology	Ate		**2551401**	[0] 25514 18.3	⊖ M-technology ⊕ reinf.brake
				PRO	**92176103**	ø 312 x 24 x 73.5	⊖ M-technology ⊖ perform. brk. sys.			**98047600**	L1045	
					TPM0003			Ate		**82062900**		
									PRO	**92239703**	ø 300 x 20 x 66	⊖ M-technology ⊖ perform. brk. sys. →04/13
									PRO	**92241903**	ø 330 x 20 x 66.2	⊖ M-technology ⊕ reinf.brake →04/13
										TPM0003		
										91049300	ø 185 x 20	
										97003100		
		78200	Bos		**2519901**	[0] 25199 19.2		Ate		**2502902**	[0] 25029 17	⊕ perform. brk. sys.
320 d	06/12→	135 / 184			**98047500**	L675		Ate		**2530701**	[0] 25307 17.2	⊖ perform. brk. sys.
				PRO	**92176103**	ø 312 x 24 x 73.5	⊕ M-technology			**98047600**	L1045	
					TPM0003			Ate		**82062900**		
									PRO	**92239703**	ø 300 x 20 x 66	⊖ M-technology
										TPM0003		
										91049300	ø 185 x 20	
										97003100		
		78300	Bos		**2519901**	[0] 25199 19.2	⊕ cruise control ⊖ M-technology	Ate		**2502902**	[0] 25029 17	⊕ perform. brk. sys.
320 i	06/12→	135 / 184	Ate		**2550601**	[0] 25506 18.2	⊖ cruise control ⊖ M-technology	Ate		**2530701**	[0] 25307 17.2	⊖ perform. brk. sys.
					98047500	L675	left			**98047600**	L1045	
			Ate		**82062900**			Ate		**82062900**		
			Ate		**82517800**		⊖ cruise control ⊖ M-technology			**TPM0003**		

→

kW / hp

3 Touring (F31) 10/11→07/13

320 i	06/12→	78300 135 / 184		PRO	92176103	ø 312 x 24 x 73.5	⊕ M-technology ⊕ cruise control ⊖ perform. brk. sys.			91053300	ø 160.5 x 20	
				PRO	92238503	ø 300 x 22 x 73.2	⊖ cruise control ⊖ M-technology ⊖ perform. brk. sys.			97012600		
					TPM0003							
320 i xDrive	06/12→	78400 135 / 184	Bos		2519901	[o] 25199 19.2	⊕ cruise control	Ate		2502902	[o] 25029 17	⊕ perform. brk. sys.
			Ate		2550601	[o] 25506 18.2	⊖ M-technology	Ate		2530701	[o] 25307 17.2	⊖ perform. brk. sys.
					98047500	L675	left			98047600	L1045	
			Ate		82062900			Ate		82062900		
			Ate		82517800		⊕ cruise control →07/13		PRO	92239703	ø 300 x 20 x 66	⊖ M-technology ⊖ perform. brk. sys. →04/13
				PRO	92176103	ø 312 x 24 x 73.5	⊕ cruise control			TPM0003		
				PRO	92238503	ø 300 x 22 x 73.2	⊖ M-technology ⊖ perform. brk. sys.			91049300	ø 185 x 20	
					TPM0003					97003100		
325 d	03/13→	78500 160 / 218	Bos		2519901	[o] 25199 19.2	⊖ M-technology	Ate		2502902	[o] 25029 17	⊕ perform. brk. sys.
					98047500	L675	left	Ate		2530701	[o] 25307 17.2	⊖ perform. brk. sys.
			Ate		82517800		⊖ M-technology	Ate		2551401	[o] 25514 18.3	⊖ M-technology ⊕ reinf.brake
				PRO	92242003	ø 330 x 24 x 73.2	⊖ M-technology ⊖ perform. brk. sys.			98047600	L1045	
					TPM0003			Ate		82062900		
									PRO	92241903	ø 330 x 20 x 66.2	⊖ M-technology ⊕ reinf.brake →04/13
										TPM0003		
										91049300	ø 185 x 20	
										97003100		
328 i	06/12→	78600 180 / 245	Bos		2519901	[o] 25199 19.2	⊖ M-technology ⊖ perform. brk. sys.	Ate		2502902	[o] 25029 17	⊕ perform. brk. sys.
					98047500	L675		Ate		2530701	[o] 25307 17.2	⊖ perform. brk. sys.
			Ate		82517800		⊖ M-technology ⊖ perform. brk. sys.			98047600	L1045	
				PRO	92242003	ø 330 x 24 x 73.2	⊖ M-technology ⊖ perform. brk. sys.	Ate		82062900		
					TPM0003				PRO	92239703	ø 300 x 20 x 66	⊖ M-technology ⊖ perform. brk. sys.
										TPM0003		
										91049300	ø 185 x 20	
										97003100		
328 i xDrive	06/12→	78700 180 / 245	Bos		2519901	[o] 25199 19.2	⊖ M-technology	Ate		2502902	[o] 25029 17	⊕ perform. brk. sys.
					98047500	L675	left	Ate		2530701	[o] 25307 17.2	⊖ perform. brk. sys.
			Ate		82517800		⊖ M-technology			98047600	L1045	
				PRO	92242003	ø 330 x 24 x 73.2	⊖ M-technology ⊖ perform. brk. sys.	Ate		82062900		
					TPM0003				PRO	92239703	ø 300 x 20 x 66	⊖ M-technology ⊖ perform. brk. sys. →04/13
										TPM0003		
										91049300	ø 185 x 20	
										97003100		
330 d	06/12→	78800 190 / 258	Bos		2519901	[o] 25199 19.2	⊖ M-technology ⊖ perform. brk. sys.	Ate		2502902	[o] 25029 17	⊕ M-technology ⊕ perform. brk. sys.
					98047500	L675		Ate		2551401	[o] 25514 18.3	⊖ M-technology ⊖ perform. brk. sys.
			Ate		82517800		⊖ M-technology ⊖ perform. brk. sys.			98047600	L1045	
				PRO	92242003	ø 330 x 24 x 73.2	⊖ M-technology ⊖ perform. brk. sys.	Ate		82062900		

BMW

BMW

		kW / hp									
3 Touring (F31) 10/11→07/13											
78800				TPM0003				PRO	92241903	ø 330 x 20 x 66.2	⊖ M-technology ⊖ perform. brk. sys.
330 d	06/12→	190 / 258							TPM0003		
									91049300	ø 185 x 20	
									97003100		
78900			Bos	2519901	[o] 25199 19.2	⊖ M-technology	Ate		2502902	[o] 25029 17	⊕ M-technology
330 d xDrive	06/12→	190 / 258		98047500	L675	left	Ate		2551401	[o] 25514 18.3	⊖ M-technology
			Ate	82517800		⊖ M-technology			98047600	L1045	
				92242003	ø 330 x 24 x 73.2	⊖ M-technology ⊖ perform. brk. sys.	Ate		82062900		
				TPM0003				PRO	92241903	ø 330 x 20 x 66.2	⊖ M-technology ⊖ perform. brk. sys. →04/13
									TPM0003		
									91049300	ø 185 x 20	
									97003100		
79000				98047500	L675		Ate		2502902	[o] 25029 17	⊕ M-technology
335 d xDrive	09/13→	230 / 313		TPM0003			Ate		2551401	[o] 25514 18.3	⊖ M-technology
									98047600	L1045	
									TPM0003		
									91049300	ø 185 x 20	
									97003100		
79100				98047500	L675	left	Ate		2502902	[o] 25029 17	⊕ M-technology
335 i	01/12→07/13	240 / 326		TPM0003			Ate		2530701	[o] 25307 17.2	⊖ M-technology ⊕ J
							Ate		2551401	[o] 25514 18.3	⊖ M-technology
									98047600	L1045	
								PRO	92241903	ø 330 x 20 x 66.2	⊖ M-technology ⊖ perform. brk. sys.
									TPM0003		
									91049300	ø 185 x 20	
									97003100		
79200				98047500	L675	left	Ate		2502902	[o] 25029 17	⊕ M-technology
335 i	03/13→	225 / 306		TPM0003			Ate		2551401	[o] 25514 18.3	⊖ M-technology
335 i xDrive	03/13→	225 / 306							98047600	L1045	
							Ate		82062900		
								PRO	92241903	ø 330 x 20 x 66.2	⊖ M-technology ⊖ perform. brk. sys. →04/13
									TPM0003		
									91049300	ø 185 x 20	
									97003100		
79300				98047500	L675	left	Ate		2502902	[o] 25029 17	⊕ M-technology
335 i	07/13→	250 / 340		TPM0003			Ate		2530701	[o] 25307 17.2	⊖ M-technology ⊕ J →2014-07
							Ate		2551401	[o] 25514 18.3	⊖ M-technology
									98047600	L1045	
								PRO	92241903	ø 330 x 20 x 66.2	⊖ M-technology ⊖ perform. brk. sys.
									TPM0003		

→

		kW / hp										
3 Touring (F31) 10/11→07/13												
79300												
335 i	07/13→	250 / 340								91049300	ø 185 x 20	
										97003100		
79400				98047500	L675	left	Ate		2502902	[o] 25029 17	⊕ M-technology	
335 i xDrive	01/12→07/13	240 / 326		TPM0003			Ate		2551401	[o] 25514 18.3	⊖ M-technology	
335 i xDrive	07/13→	250 / 340							98047600	L1045		
								PRO	92241903	ø 330 x 20 x 66.2	⊖ M-technology ⊖ perform. brk. sys.	
									TPM0003			
									91049300	ø 185 x 20		
									97003100			
4 Cabriolet (F33, F83) 10/13→ → 4 Convertible (F33, F83), Page 155												
4 Convertible (F33, F83) 10/13→												
79500			Bos	2519901	[o] 25199 19.2	⊖ M-technology	Ate		2502902	[o] 25029 17	⊕ M-technology	
420 d	10/13→	135 / 184		98047500	L675		Ate		2530701	[o] 25307 17.2	⊖ M-technology	
			Ate	82517800		⊖ M-technology			98047600	L1045		
				92176103	ø 312 x 24 x 73.5	⊖ M-technology ⊖ perform. brk. sys.			TPM0003			
				TPM0003					91053300	ø 160.5 x 20		
									97012600			
79600			Ate	2550601	[o] 25506 18.2	⊖ M-technology	Ate		2502902	[o] 25029 17	⊕ M-technology	
420 i	07/14→	135 / 184		98047500	L675	left	Ate		2530701	[o] 25307 17.2	⊖ M-technology	
				92238503	ø 300 x 22 x 73.2	⊖ M-technology			98047600	L1045		
				TPM0003					TPM0003			
									91049300	ø 185 x 20		
									97003100			
79700			Bos	2519901	[o] 25199 19.2	⊖ M-technology	Ate		2502902	[o] 25029 17	⊕ M-technology	
425 d	07/14→	160 / 218		98047500	L675	left	Ate		2530701	[o] 25307 17.2	⊖ M-technology	
430 d	07/14→	190 / 258	Ate	82517800		⊖ M-technology			98047600	L1045		
				92242003	ø 330 x 24 x 73.2	⊖ M-technology			TPM0003			
				TPM0003					91049300	ø 185 x 20		
									97003100			
79800			Bos	2519901	[o] 25199 19.2	⊖ M-technology	Ate		2502902	[o] 25029 17	⊕ M-technology	
428 i	10/13→	180 / 245		98047500	L675		Ate		2530701	[o] 25307 17.2	⊖ M-technology	
428 i xDrive	01/14→	180 / 245	Ate	82517800		⊖ M-technology			98047600	L1045		
				92242003	ø 330 x 24 x 73.2	⊖ M-technology ⊖ perform. brk. sys.			TPM0003			
				TPM0003					91049300	ø 185 x 20		
									97003100			
79900			Bos	2519901	[o] 25199 19.2	⊖ M-technology	Ate		2502902	[o] 25029 17	⊕ M-technology	
430 d	10/13→	210 / 286		98047500	L675	left	Ate		2551401	[o] 25514 18.3	⊖ M-technology	
			Ate	82517800		⊖ M-technology			98047600	L1045		
				92242003	ø 330 x 24 x 73.2	⊖ M-technology ⊖ perform. brk. sys.		PRO	92241903	ø 330 x 20 x 66.2	⊖ M-technology ⊖ perform. brk. sys.	
				TPM0003					TPM0003			

BMW

BMW

		kW / hp										
4 Convertible (F33, F83) 10/13→												
430 d	10/13→	79900 210 / 286		98047500	L675	left		91049300	ø 185 x 20	
								97003100		
435 d xDrive	07/14→	80000 230 / 313		98047500	L675	left		91049300	ø 185 x 20	
								97003100		
435 i	10/13→	80100 225 / 306		98047500	L675		Ate	2502902	[o] 25029 17	⊕ M-technology
				TPM0003			Ate	2551401	[o] 25514 18.3	⊖ M-technology
								98047600	L1045	
								TPM0003		
								91049300	ø 185 x 20	
								97003100		
435 i 435 i xDrive	10/13→ 07/14→	80200 250 / 340 250 / 340		98047500	L675	left	Ate	2502902	[o] 25029 17	⊕ M-technology
				TPM0003			Ate	2551401	[o] 25514 18.3	⊖ M-technology
								98047600	L1045	
							PRO	92241903	ø 330 x 20 x 66.2	⊖ M-technology ⊖ perform. brk. sys.
								TPM0003		
								91049300	ø 185 x 20	
								97003100		
435 i xDrive	07/14→	80300 225 / 306		98047500	L675	left	Ate	2502902	[o] 25029 17	⊕ M-technology
			PRO	92242003	ø 330 x 24 x 73.2	⊖ M-technology	Ate	2551401	[o] 25514 18.3	⊖ M-technology
				TPM0003				98047600	L1045	
							PRO	92241903	ø 330 x 20 x 66.2	⊖ M-technology
								TPM0003		
								91049300	ø 185 x 20	
								97003100		
4 Coupe (F32, F82) 07/13→										
420 d	07/13→	80400 135 / 184	Bos	2519901	[o] 25199 19.2	⊖ M-technology	Ate	2502902	[o] 25029 17	⊕ perform. brk. sys.
				98047500	L675	left	Ate	2530701	[o] 25307 17.2	⊖ perform. brk. sys.
			Ate	82517800		⊖ M-technology		98047600	L1045	
			PRO	92176103	ø 312 x 24 x 73.5	⊖ M-technology	Ate	82062900		
				TPM0003				TPM0003		
								91049300	ø 185 x 20	
								97003100		
420 d xDrive	11/13→	80500 135 / 184	Bos	2519901	[o] 25199 19.2	⊖ M-technology	Ate	2502902	[o] 25029 17	⊕ M-technology
				98047500	L675		Ate	2530701	[o] 25307 17.2	⊖ M-technology
			Ate	82517800		⊖ M-technology		98047600	L1045	
			PRO	92176103	ø 312 x 24 x 73.5	⊖ M-technology ⊖ perform. brk. sys.		TPM0003		
				TPM0003				91049300	ø 185 x 20	
								97003100		
420 i	11/13→	80600 135 / 184	Ate	2550601	[o] 25506 18.2	⊖ M-technology	Ate	2502902	[o] 25029 17	⊕ M-technology
				98047500	L675		Ate	2530701	[o] 25307 17.2	⊖ M-technology

→

30 kW / hp

4 Coupe (F32, F82) 07/13→

420 i	11/13→	80600 135 / 184		PRO	92238503	ø 300 x 22 x 73.2	⊖ M-technology ⊖ perform. brk. sys.		98047600	L1045	
					TPM0003				TPM0003		
									91053300	ø 160.5 x 20	
									97012600		
420 i xDrive	11/13→	80700 135 / 184	Ate		2550601	[o] 25506 18.2	⊖ M-technology	Ate	2502902	[o] 25029 17	⊕ M-technology
					98047500	L675		Ate	2530701	[o] 25307 17.2	⊖ M-technology
				PRO	92238503	ø 300 x 22 x 73.2	⊖ M-technology ⊖ perform. brk. sys.		98047600	L1045	
					TPM0003				TPM0003		
									91049300	ø 185 x 20	
									97003100		
425 d	01/14→	80800 160 / 218	Bos		2519901	[o] 25199 19.2	⊖ M-technology	Ate	2502902	[o] 25029 17	⊕ M-technology
					98047500	L675		Ate	2530701	[o] 25307 17.2	⊖ M-technology
			Ate		82517800		⊖ M-technology		98047600	L1045	
				PRO	92242003	ø 330 x 24 x 73.2	⊖ M-technology ⊖ perform. brk. sys.		TPM0003		
					TPM0003				91053300	ø 160.5 x 20	
									97012600		
428 i	07/13→	80900 180 / 245	Bos		2519901	[o] 25199 19.2		Ate	2502902	[o] 25029 17	⊕ perform. brk. sys.
					98047500	L675	left	Ate	2530701	[o] 25307 17.2	⊖ perform. brk. sys.
			Ate		82517800		⊖ M-technology		98047600	L1045	
				PRO	92242003	ø 330 x 24 x 73.2	⊖ M-technology	Ate	82062900		
					TPM0003				TPM0003		
									91049300	ø 185 x 20	
									97003100		
428 i xDrive	07/13→	81000 180 / 245	Bos		2519901	[o] 25199 19.2		Ate	2502902	[o] 25029 17	⊕ M-technology
					98047500	L675	left	Ate	2530701	[o] 25307 17.2	⊖ M-technology
			Ate		82517800		⊖ M-technology		98047600	L1045	
				PRO	92242003	ø 330 x 24 x 73.2	⊖ M-technology	Ate	82062900		
					TPM0003				TPM0003		
									91049300	ø 185 x 20	
									97003100		
430 d	11/13→	81100 190 / 258	Bos		2519901	[o] 25199 19.2	⊖ M-technology	Ate	2502902	[o] 25029 17	⊕ M-technology
					98047500	L675		Ate	2551401	[o] 25514 18.3	⊖ M-technology
			Ate		82517800		⊖ M-technology		98047600	L1045	
				PRO	92242003	ø 330 x 24 x 73.2	⊖ M-technology ⊖ perform. brk. sys.		TPM0003		
					TPM0003				91049300	ø 185 x 20	
									97003100		
430 d 430 d xDrive	11/13→ 11/13→	81200 210 / 286 210 / 286	Bos		2519901	[o] 25199 19.2	⊖ M-technology	Ate	2502902	[o] 25029 17	⊕ M-technology
					98047500	L675	left	Ate	2551401	[o] 25514 18.3	⊖ M-technology
			Ate		82517800		⊖ M-technology		98047600	L1045	
				PRO	92242003	ø 330 x 24 x 73.2	⊖ M-technology ⊖ perform. brk. sys.	PRO	92241903	ø 330 x 20 x 66.2	⊖ M-technology ⊖ perform. brk. sys.

BMW

BMW

		kW / hp											
4 Coupe (F32, F82) 07/13→													
		81200			TPM0003					TPM0003			
430 d	11/13→	210 / 286								91049300	ø 185 x 20		
430 d xDrive	11/13→	210 / 286								97003100			
		81300	Bos		2519901	[o] 25199 19.2	⊖ M-technology		Ate	2502902	[o] 25029 17	⊕ M-technology	
430 d xDrive	01/14→	190 / 258			98047500	L675			Ate	2551401	[o] 25514 18.3	⊖ M-technology	
			Ate		82517800		⊖ M-technology			98047600	L1045		
				PRO	92242003	ø 330 x 24 x 73.2	⊖ M-technology ⊖ perform. brk. sys.			92241903	ø 330 x 20 x 66.2	⊖ M-technology ⊖ perform. brk. sys.	
					TPM0003					TPM0003			
										91049300	ø 185 x 20		
										97003100			
		81400			98047500	L675			Ate	2502902	[o] 25029 17	⊕ M-technology	
435 d xDrive	11/13→	230 / 313			TPM0003				Ate	2551401	[o] 25514 18.3	⊖ M-technology	
										98047600	L1045		
										TPM0003			
										91049300	ø 185 x 20		
										97003100			
		81500			98047500	L675	left		Ate	2502902	[o] 25029 17	⊕ M-technology	
435 i	07/13→	225 / 306			TPM0003				Ate	2551401	[o] 25514 18.3	⊖ M-technology	
435 i xDrive	07/13→	225 / 306								98047600	L1045		
									Ate	82062900			
										TPM0003			
										91049300	ø 185 x 20		
										97003100			
		81600			98047500	L675	left		Ate	2502902	[o] 25029 17	⊕ M-technology	
435 i	07/13→	250 / 340			TPM0003				Ate	2551401	[o] 25514 18.3	⊖ M-technology	
435 i xDrive	07/13→	250 / 340								98047600	L1045		
										92241903	ø 330 x 20 x 66.2	⊖ M-technology ⊖ perform. brk. sys.	
										TPM0003			
										91049300	ø 185 x 20		
										97003100			
		81700			98047500	L675	left			98047600	L1045	⊖ ceramic brake	
M4	01/14→	317 / 431			TPM0009					TPM0003			
										91049300	ø 185 x 20		
										97003100			
4 Gran Coupe (F36) 03/14→													
		81800	Ate		2550601	[o] 25506 18.2	⊖ M-technology		Ate	2502902	[o] 25029 17	⊕ M-technology	
418 d	03/14→	105 / 143			98047500	L675	left		Ate	2530701	[o] 25307 17.2	⊖ M-technology	
				PRO	92238503	ø 300 x 22 x 73.2	⊖ M-technology ⊖ perform. brk. sys.			98047600	L1045		
					TPM0003					TPM0003			
										91053300	ø 160.5 x 20		

→

4 Gran Coupe (F36) 03/14→

		kW / hp											
418 d	03/14→	81800 105 / 143									97012600		
420 d	03/14→	81900 135 / 184	Bos		2519901	[o] 25199 19.2	⊖ M-technology	Ate		2502902	[o] 25029 17	⊕ M-technology
					98047500	L675		Ate		2530701	[o] 25307 17.2	⊖ M-technology
			Ate		82517800		⊖ M-technology			98047600	L1045	
				PRO	92176103	ø 312 x 24 x 73.5	⊖ M-technology ⊖ perform. brk. sys.			TPM0003		
					TPM0003					91053300	ø 160.5 x 20	
										97012600		
420 d xDrive	03/14→	82000 135 / 184	Bos		2519901	[o] 25199 19.2	⊖ M-technology	Ate		2502902	[o] 25029 17	⊕ M-technology
					98047500	L675		Ate		2530701	[o] 25307 17.2	⊖ M-technology
			Ate		82517800		⊖ M-technology			98047600	L1045	
				PRO	92176103	ø 312 x 24 x 73.5	⊖ M-technology ⊖ perform. brk. sys.			TPM0003		
					TPM0003					91049300	ø 185 x 20	
										97003100		
420 i	03/14→	82100 135 / 184	Bos		2519901	[o] 25199 19.2	⊖ M-technology	Ate		2502902	[o] 25029 17	⊕ M-technology
					98047500	L675	left	Ate		2530701	[o] 25307 17.2	⊖ M-technology
			Ate		82517800		⊖ M-technology ⊕ KP ⊕ KR ⊕ J ⊖ sport pack.			98047600	L1045	
				PRO	92176103	ø 312 x 24 x 73.5	⊖ M-technology ⊖ perform. brk. sys. ⊕ KP ⊕ KR ⊕ J			TPM0003		
				PRO	92238503	ø 300 x 22 x 73.2	⊖ M-technology ⊖ perform. brk. sys. ⊖ KP ⊖ KR ⊖ J			91053300	ø 160.5 x 20	
					TPM0003					97012600		
420 i xDrive	07/14→	82200 135 / 184	Ate		2550601	[o] 25506 18.2	⊖ M-technology	Ate		2502902	[o] 25029 17	⊕ M-technology
					98047500	L675	left	Ate		2530701	[o] 25307 17.2	⊖ M-technology
				PRO	92238503	ø 300 x 22 x 73.2	⊖ M-technology			98047600	L1045	
					TPM0003					TPM0003		
										91049300	ø 185 x 20	
										97003100		
428 i	03/14→	82300 180 / 245	Bos		2519901	[o] 25199 19.2	⊖ M-technology	Ate		2502902	[o] 25029 17	⊕ M-technology
428 i xDrive	03/14→	180 / 245			98047500	L675		Ate		2530701	[o] 25307 17.2	⊖ M-technology
			Ate		82517800		⊖ M-technology			98047600	L1045	
				PRO	92242003	ø 330 x 24 x 73.2	⊖ M-technology ⊖ perform. brk. sys.			TPM0003		
					TPM0003					91049300	ø 185 x 20	
										97003100		
430 d	03/14→	82400 210 / 286	Bos		2519901	[o] 25199 19.2	⊖ M-technology	Ate		2502902	[o] 25029 17	⊕ M-technology
					98047500	L675	left	Ate		2551401	[o] 25514 18.3	⊖ M-technology
			Ate		82517800		⊖ M-technology			98047600	L1045	
				PRO	92176103	ø 312 x 24 x 73.5	⊖ M-technology ⊕ perform. brk. sys.		PRO	92241903	ø 330 x 20 x 66.2	⊖ M-technology ⊖ perform. brk. sys.
				PRO	92242003	ø 330 x 24 x 73.2	⊖ M-technology ⊖ perform. brk. sys.			TPM0003		
					TPM0003					91049300	ø 185 x 20	
										97003100		
430 d	07/14→	82500 190 / 258	Bos		2519901	[o] 25199 19.2	⊖ M-technology	Ate		2502902	[o] 25029 17	⊕ M-technology
430 d xDrive	07/14→	190 / 258										

BMW

BMW

		kW / hp										
4 Gran Coupe (F36) 03/14→												
82500				98047500	L675	left	Ate		2551401	[o] 25514 18.3	⊖ M-technology
430 d	07/14→	190 / 258	Ate	82517800		⊖ M-technology			98047600	L1045	
430 d xDrive	07/14→	190 / 258		92242003	ø 330 x 24 x 73.2	⊖ M-technology			92241903	ø 330 x 20 x 66.2	⊖ M-technology
				TPM0003					TPM0003		
									91049300	ø 185 x 20	
									97003100		
82600				98047500	L675	left	Ate		2502902	[o] 25029 17	⊖ M-technology
435 d xDrive	07/14→	230 / 313		TPM0003			Ate		2551401	[o] 25514 18.3	⊕ M-technology
									98047600	L1045	
									92241903	ø 330 x 20 x 66.2	⊕ M-technology
									TPM0003		
									91049300	ø 185 x 20	
									97003100		
82700				98047500	L675		Ate		2502902	[o] 25029 17	⊕ M-technology
435 i	03/14→	225 / 306		TPM0003			Ate		2551401	[o] 25514 18.3	⊖ M-technology
									98047600	L1045	
									92241903	ø 330 x 20 x 66.2	⊖ M-technology ⊖ perform. brk. sys.
									TPM0003		
									91049300	ø 185 x 20	
									97003100		
82800				98047500	L675	left	Ate		2502902	[o] 25029 17	⊕ M-technology
435 i xDrive	07/14→	225 / 306		TPM0003			Ate		2551401	[o] 25514 18.3	⊖ M-technology
									98047600	L1045	
									92241903	ø 330 x 20 x 66.2	⊕ M-technology
									TPM0003		
									91049300	ø 185 x 20	
									97003100		
82900				98047500	L675	left	Ate		2502902	[o] 25029 17	⊕ M-technology
435 i xDrive	07/14→	250 / 340		TPM0003			Ate		2551401	[o] 25514 18.3	⊖ M-technology
									98047600	L1045	
									92241903	ø 330 x 20 x 66.2	⊖ M-technology ⊖ perform. brk. sys.
									TPM0003		
									91049300	ø 185 x 20	
									97003100		
5 (E39) 11/95→12/04												
83000			Ate	2148602	[o] 21486 19.3	⊕ governm. veh.	Ate		2169103	[o] 21691 17.3	
520 d	02/00→06/03	100 / 136	Ate	2148681	[o] 21486 19.3	⊕ governm. veh.	Ate		2169181	[o] 21691 17.3	
520 i	09/00→06/03	125 / 170	Ate	2199003	[o] 21990 20.3	⊖ governm. veh.			98020700	L545	
			Ate	2199081	[o] 21990 20.3	⊖ governm. veh.	Ate		82062900		
				98020600	L840		Ate		82071500		

→

kW / hp

5 (E39) 11/95→12/04

83000													
520 d	02/00→06/03	100 / 136											
520 i	09/00→06/03	125 / 170	Ate		82062900				PRO	92076603	ø 298 x 10 x 61	
			Ate		82072800		⊖ governm. veh.		PRO	92075103	ø 298 x 20 x 61	⊕ incr. payload ⊕ governm. veh.
				PRO	92075003	ø 296 x 22 x 76				TPM0003		
				PRO	92075005	ø 296 x 22 x 76				91049300	ø 185 x 20	
					TPM0003					97003100		
83100			Ate		2167703	[o] 21677 20.3	→10/96	Ate		2169103	[o] 21691 17.3	
520 i	01/96→09/00	110 / 150	Ate	epad	2167781	[o] 21677 20.3	→10/96	Ate	epad	2169181	[o] 21691 17.3	
523 i	11/95→09/00	125 / 170	Ate		2199003	[o] 21990 20.3	10/96→			98020700	L545	
			Ate	epad	2199081	[o] 21990 20.3	10/96→	Ate		82062900		
					98020600	L840		Ate		82071500		
			Ate		82059300		→10/96		PRO	92076603	ø 298 x 10 x 61	
			Ate		82062900				PRO	92075103	ø 298 x 20 x 61	⊕ incr. payload
			Ate		82072800		10/96→			TPM0003		
				PRO	92075003	ø 296 x 22 x 76				91049300	ø 185 x 20	
				PRO	92075005	ø 296 x 22 x 76				97003100		
					TPM0003							
83200			Ate		2199003	[o] 21990 20.3		Ate		2169103	[o] 21691 17.3	
520 i	04/99→06/03	100 / 136	Ate	epad	2199081	[o] 21990 20.3		Ate	epad	2169181	[o] 21691 17.3	
525 td	01/97→06/03	85 / 116			98020600	L840				98020700	L545	
			Ate		82062900			Ate		82062900		
			Ate		82072800			Ate		82071500		
				PRO	92075003	ø 296 x 22 x 76			PRO	92076603	ø 298 x 10 x 61	
				PRO	92075005	ø 296 x 22 x 76			PRO	92075103	ø 298 x 20 x 61	⊕ incr. payload
					TPM0003					TPM0003		
										91049300	ø 185 x 20	
										97003100		
83300			Ate		2148602	[o] 21486 19.3	⊕ governm. veh.	Ate		2169103	[o] 21691 17.3	
525 d	02/00→06/03	120 / 163	Ate	epad	2148681	[o] 21486 19.3	⊕ governm. veh.	Ate	epad	2169181	[o] 21691 17.3	
525 i	09/00→06/03	141 / 192	Ate		2199003	[o] 21990 20.3	⊖ governm. veh.			98020700	L545	
			Ate	epad	2199081	[o] 21990 20.3	⊖ governm. veh.	Ate		82062900		
					98020600	L840		Ate		82071500		
			Ate		82062900				PRO	92075103	ø 298 x 20 x 61	
			Ate		82072800		⊖ governm. veh.			TPM0003		
				PRO	92075003	ø 296 x 22 x 76				91049300	ø 185 x 20	
				PRO	92075005	ø 296 x 22 x 76				97003100		
					TPM0003							
83400			Ate		2148602	[o] 21486 19.3	⊕ governm. veh.	Ate		2169103	[o] 21691 17.3	
525 i	09/00→12/02	137 / 186	Ate	epad	2148681	[o] 21486 19.3	⊕ governm. veh.	Ate	epad	2169181	[o] 21691 17.3	
			Ate		2199003	[o] 21990 20.3	⊖ governm. veh.			98020700	L545	
			Ate	epad	2199081	[o] 21990 20.3	⊖ governm. veh.		PRO	92075103	ø 298 x 20 x 61	

BMW

BMW

		kW / hp										
5 (E39) 11/95→12/04												
83400				98020600	L840				TPM0003		
525 i	09/00→12/02	137 / 186	Ate	82072800					91049300	ø 185 x 20	
				92107100	ø 324 x 30 x 73.5	⊕ governm. veh.			97003100		
			PRO	92075003	ø 296 x 22 x 76	⊖ governm. veh.					
			PRO	92075005	ø 296 x 22 x 76	⊖ governm. veh.					
			PRO	92107105	ø 324 x 30 x 73.5	⊕ governm. veh.					
				TPM0003							
83500			Ate	2167703	[o] 21677 20.3	→10/96	Ate	2169103	[o] 21691 17.3		
525 tds	01/96→06/03	105 / 143									
528 i	11/95→09/00	142 / 193	Ate epad	2167781	[o] 21677 20.3	→10/96	Ate epad	2169181	[o] 21691 17.3		
			Ate	2199003	[o] 21990 20.3	10/96→		98020700	L545		
			Ate epad	2199081	[o] 21990 20.3	10/96→	Ate	82062900			
				98020600	L840		Ate	82071500			
			Ate	82059300		→10/96	PRO	92075103	ø 298 x 20 x 61		
			Ate	82062900				TPM0003			
			Ate	82072800		10/96→		91049300	ø 185 x 20		
			PRO	92075003	ø 296 x 22 x 76			97003100			
			PRO	92075005	ø 296 x 22 x 76						
				TPM0003							
83600			Ate	2199003	[o] 21990 20.3		Ate	2169103	[o] 21691 17.3		
530 d	08/98→09/00	135 / 184	Ate epad	2199081	[o] 21990 20.3		Ate epad	2169181	[o] 21691 17.3		
				98020600	L840			98020700	L545		
			Ate	82062900			Ate	82062900			
			Ate	82072800			Ate	82071500			
			PRO	92075003	ø 296 x 22 x 76		PRO	92075103	ø 298 x 20 x 61		
			PRO	92075005	ø 296 x 22 x 76			TPM0003			
				TPM0003				91049300	ø 185 x 20		
								97003100			
83700			Ate	2148602	[o] 21486 19.3		Ate	2169103	[o] 21691 17.3		
530 d	09/00→06/03	142 / 193	Ate epad	2148681	[o] 21486 19.3		Ate epad	2169181	[o] 21691 17.3		
				98020600	L840			98020700	L545		
			Ate	82030500			Ate	82062900			
			Ate	82062900			Ate	82071500			
				92107100	ø 324 x 30 x 73.5		PRO	92075103	ø 298 x 20 x 61		
			PRO	92107105	ø 324 x 30 x 73.5			TPM0003			
				TPM0003				91049300	ø 185 x 20		
								97003100			
83800			Ate	2148602	[o] 21486 19.3		Ate	2169103	[o] 21691 17.3		
530 i	09/00→06/03	170 / 231	Ate epad	2148681	[o] 21486 19.3		Ate epad	2169181	[o] 21691 17.3		
				98020600	L840			98020700	L545		
			Ate	82030500			Ate	82062900			

→

30 kW / hp

5 (E39) 11/95→12/04

530 i	09/00→06/03	83800 170 / 231	Ate		82062900			Ate		82071500		
					92058300	ø 324 x 30 x 77.1	→09/00		PRO	92075103	ø 298 x 20 x 61	
					92107100	ø 324 x 30 x 73.5	10/00→			TPM0003		
				PRO	92107105	ø 324 x 30 x 73.5	10/00→			91049300	ø 185 x 20	
					TPM0003					97003100		
530 i	09/00→12/04	83900 168 / 228	Ate		2148602	[o] 21486 19.3		Ate		2169103	[o] 21691 17.3	
			Ate	epad	2148681	[o] 21486 19.3		Ate	epad	2169181	[o] 21691 17.3	
					98020600	L840				98020700	L545	
			Ate		82072800				PRO	92075103	ø 298 x 20 x 61	
					92107100	ø 324 x 30 x 73.5				TPM0003		
				PRO	92107105	ø 324 x 30 x 73.5				91049300	ø 185 x 20	
					TPM0003					97003100		
535 i	04/96→03/99	84000 173 / 235	Ate		2148602	[o] 21486 19.3	09/97→	Ate		2169103	[o] 21691 17.3	
			Ate	epad	2148681	[o] 21486 19.3	09/97→	Ate	epad	2169181	[o] 21691 17.3	
			Ate		2167703	[o] 21677 20.3	→10/96			98020700	L545	
			Ate	epad	2167781	[o] 21677 20.3	→10/96	Ate		82062900		
			Ate		2199003	[o] 21990 20.3	10/96→ →08/97	Ate		82071500		
			Ate	epad	2199081	[o] 21990 20.3	10/96→ →08/97		PRO	92075103	ø 298 x 20 x 61	
					98020600	L840				TPM0003		
			Ate		82059100		08/97→			91049300	ø 185 x 20	
			Ate		82059300		→10/96			97003100		
			Ate		82062900							
			Ate		82072800		10/96→ →08/97					
					92058300	ø 324 x 30 x 77.1	09/97→					
				PRO	92075003	ø 296 x 22 x 76	→08/97					
				PRO	92075005	ø 296 x 22 x 76	→08/97					
					TPM0003							
535 i	04/99→06/03	84100 180 / 245	Ate		2148602	[o] 21486 19.3		Ate		2169103	[o] 21691 17.3	
			Ate	epad	2148681	[o] 21486 19.3		Ate	epad	2169181	[o] 21691 17.3	
					98020600	L840				98020700	L545	
			Ate		82030500		04/00→	Ate		82062900		
			Ate		82059100		→03/00	Ate		82071500		
			Ate		82062900				PRO	92075103	ø 298 x 20 x 61	
					92058300	ø 324 x 30 x 77.1	→09/00			TPM0003		
					92107100	ø 324 x 30 x 73.5	10/00→			91049300	ø 185 x 20	
				PRO	92107105	ø 324 x 30 x 73.5	10/00→			97003100		
					TPM0003							
540 i	04/96→06/03	84200 210 / 286	Ate		2148602	[o] 21486 19.3		Ate		2169103	[o] 21691 17.3	
			Ate	epad	2148681	[o] 21486 19.3		Ate	epad	2169181	[o] 21691 17.3	
					98020600	L840				98020700	L545	

BMW

BMW

		kW / hp									
5 (E39) 11/95→12/04											
84200			Ate	82030500		04/00→	Ate	82062900		
540 i	04/96→06/03	210 / 286	Ate	82059100		→03/00	Ate	82071500		
			Ate	82062900			PRO	92075103	ø 298 x 20 x 61	
				92058300	ø 324 x 30 x 77.1	→03/00		TPM0003		
				92107100	ø 324 x 30 x 73.5	04/00→		91049300	ø 185 x 20	
				PRO 92107105	ø 324 x 30 x 73.5	04/00→		97003100		
				TPM0003						
84300			Ate	2148602	[o] 21486 19.3		Ate	2148701	[o] 21487 17.2	
M 4.9	10/98→06/03	294 / 400	Ate	epad 2148681	[o] 21486 19.3		Ate	epad 2148781	[o] 21487 17.2	
M 5.0	09/98→06/03	230 / 313		98020600	L840		Ate	82057500		
			Ate	82030500			Ate	82062900		
			Ate	82062900				TPM0003		
				TPM0003				91058700	ø 185 x 30	
								97032200		
5 (E60) 07/03→03/10											
84400			Ate	2331211	[o] 23312 20.3	⊕ governm. veh. ⊕ incr. payload Ø 324 mm	Ate	2373201	[o] 23732 17.3	
520 d	07/05→03/10	120 / 163								
520 d	09/05→03/10	110 / 150	Ate	epad 2331282	[o] 23312 20.3	⊕ governm. veh. ⊕ incr. payload Ø 324 mm	Ate	epad 2373281	[o] 23732 17.3	
520 d	09/07→03/10	130 / 177	Ate	2379301	[o] 23793 20.3	⊖ governm. veh. ⊖ incr. payload Ø 310 mm		98030500	L685	
			Ate	epad 2379381	[o] 23793 20.3	⊖ governm. veh. ⊖ incr. payload Ø 310 mm	Ate	82062900		
				98030400	L670		Ate	82072700		
			Ate	82062900				PRO 92122703	ø 320 x 20 x 63	
			Ate	82072000		⊕ governm. veh.		TPM0003		
			Ate	82074500		⊖ governm. veh.		91058700	ø 185 x 30	
				PRO 92122503	ø 310 x 24 x 77	⊖ governm. veh. ⊖ incr. payload		97032200		
				PRO 92122505	ø 310 x 24 x 77	⊖ governm. veh. ⊖ incr. payload				
				PRO 92122603	ø 324 x 30 x 77.2	⊕ governm. veh. ⊕ incr. payload				
				PRO 92122605	ø 324 x 30 x 77.2	⊕ governm. veh. ⊕ incr. payload				
				TPM0003						
84500			Ate	2331211	[o] 23312 20.3	⊕ autom. Ø 324 mm	Ate	2373201	[o] 23732 17.3	
520 i	07/03→03/10	125 / 170	Ate	epad 2331282	[o] 23312 20.3	⊕ autom. Ø 324 mm	Ate	epad 2373281	[o] 23732 17.3	
			Ate	2379301	[o] 23793 20.3	⊕ man. Ø 310 mm		98030500	L685	
			Ate	epad 2379381	[o] 23793 20.3	⊕ man. Ø 310 mm	Ate	82062900		
				98030400	L670		Ate	82072700		
			Ate	82062900				PRO 92122703	ø 320 x 20 x 63	
			Ate	82072000		⊕ autom.		TPM0003		
			Ate	82074500		⊕ man.		91058700	ø 185 x 30	
				PRO 92122503	ø 310 x 24 x 77	⊕ man.		97032200		
				PRO 92122505	ø 310 x 24 x 77	⊕ man.				
				PRO 92122603	ø 324 x 30 x 77.2	⊕ autom.				
				PRO 92122605	ø 324 x 30 x 77.2	⊕ autom.				

→

5 (E60) 07/03→03/10

		kW / hp											
520 i	07/03→03/10	84500 125 / 170			TPM0003								
520 i	04/06→12/09	84600 115 / 156	Ate		2331211	[o] 23312 20.3	⊖ M-technology ⊕ autom.	Ate		2373201	[o] 23732 17.3	⊖ M-technology
			Ate	epad	2331282	[o] 23312 20.3	⊖ M-technology ⊕ autom.	Ate	epad	2373281	[o] 23732 17.3	⊖ M-technology
			Ate		2379301	[o] 23793 20.3	⊖ M-technology			98030500	L685	
			Ate	epad	2379381	[o] 23793 20.3	⊖ M-technology	Ate		82072700		⊖ M-technology
					98030400	L670	left		PRO	92122703	ø 320 x 20 x 63	⊖ M-technology
			Ate		82072000		⊖ M-technology ⊕ autom.			TPM0003		
			Ate		82074500		⊖ M-technology			91058700	ø 185 x 30	
										97032200		
520 i	12/06→03/10	84700 120 / 163	Ate		2331211	[o] 23312 20.3	⊕ autom.	Ate		2373201	[o] 23732 17.3	
			Ate	epad	2331282	[o] 23312 20.3	⊕ autom.	Ate	epad	2373281	[o] 23732 17.3	
			Ate		2379301	[o] 23793 20.3	⊕ man.			98030500	L685	
			Ate	epad	2379381	[o] 23793 20.3	⊕ man.	Ate		82072700		
					98030400	L670	left		PRO	92122703	ø 320 x 20 x 63	
			Ate		82072000		⊕ autom.			TPM0003		
			Ate		82074500		⊕ man.			91058700	ø 185 x 30	
										97032200		
520 i	09/07→03/10	84800 125 / 170	Ate		2331211	[o] 23312 20.3	⊕ governm. veh. Ø 324 mm	Ate		2373201	[o] 23732 17.3	
523 i	07/05→03/10	130 / 177										
525 d	06/04→03/10	130 / 177	Ate	epad	2331282	[o] 23312 20.3	⊕ governm. veh. Ø 324 mm	Ate	epad	2373281	[o] 23732 17.3	
525 d	12/04→03/10	120 / 163										
525 i	09/03→03/10	141 / 192	Ate		2379301	[o] 23793 20.3	⊖ governm. veh. Ø 310 mm			98030500	L685	
			Ate	epad	2379381	[o] 23793 20.3	⊖ governm. veh. Ø 310 mm	Ate		82062900		
					98030400	L670		Ate		82072700		
			Ate		82062900				PRO	92122703	ø 320 x 20 x 63	
			Ate		82072000		⊕ governm. veh.			TPM0003		
			Ate		82074500		⊖ governm. veh.			91058700	ø 185 x 30	
				PRO	92122503	ø 310 x 24 x 77	⊖ governm. veh.			97032200		
				PRO	92122505	ø 310 x 24 x 77	⊖ governm. veh.					
				PRO	92122603	ø 324 x 30 x 77.2	⊕ governm. veh.					
				PRO	92122605	ø 324 x 30 x 77.2	⊕ governm. veh.					
					TPM0003							
523 i	01/07→03/10	84900 140 / 190	Ate		2331211	[o] 23312 20.3	⊕ governm. veh. ⊕ incr. payload	Ate		2373201	[o] 23732 17.3	
			Ate	epad	2331282	[o] 23312 20.3	⊕ governm. veh. ⊕ incr. payload	Ate	epad	2373281	[o] 23732 17.3	
			Ate		2379301	[o] 23793 20.3	⊖ governm. veh. ⊖ incr. payload			98030500	L685	
			Ate	epad	2379381	[o] 23793 20.3	⊖ governm. veh. ⊖ incr. payload	Ate		82062900		
					98030400	L670		Ate		82072700		
			Ate		82062900				PRO	92122703	ø 320 x 20 x 63	
			Ate		82072000		⊕ governm. veh. ⊕ incr. payload			TPM0003		
			Ate		82074500		⊖ governm. veh. ⊖ incr. payload			91058700	ø 185 x 30	
				PRO	92122503	ø 310 x 24 x 77	⊖ governm. veh. ⊖ incr. payload			97032200		
				PRO	92122505	ø 310 x 24 x 77	⊖ governm. veh. ⊖ incr. payload					

BMW

BMW

30 kW / hp

5 (E60) 07/03→03/10

84900													
523 i	01/07→03/10	140 / 190		PRO	92122603	ø 324 x 30 x 77.2	⊕ governm. veh. ⊕ incr. payload						
				PRO	92122605	ø 324 x 30 x 77.2	⊕ governm. veh. ⊕ incr. payload						
					TPM0003								
85000			Ate		2331211	[o] 23312 20.3	⊕ governm. veh. ⊕ incr. payload	Ate		2373201	[o] 23732 17.3	⊖ governm. veh. ⊖ incr. payload	
525 d	01/07→03/10	145 / 197	Ate	epad	2331282	[o] 23312 20.3	⊕ governm. veh. ⊕ incr. payload	Ate	epad	2373281	[o] 23732 17.3	⊖ governm. veh. ⊖ incr. payload	
			Ate		2379301	[o] 23793 20.3	⊖ governm. veh. ⊖ incr. payload			98030500	L685		
			Ate	epad	2379381	[o] 23793 20.3	⊖ governm. veh. ⊖ incr. payload	Ate		82062900			
					98030400	L670		Ate		82072700		⊖ governm. veh. ⊖ incr. payload	
			Ate		82062900		⊕ autom.		PRO	92122703	ø 320 x 20 x 63	⊖ governm. veh. ⊖ incr. payload	
			Ate		82072000		⊕ autom.		PRO	92182503	ø 345 x 24 x 63		
				PRO	92122603	ø 324 x 30 x 77.2	⊖ governm. veh. ⊖ incr. payload			TPM0003			
				PRO	92122605	ø 324 x 30 x 77.2	⊖ governm. veh. ⊖ incr. payload			91058700	ø 185 x 30		
				PRO	92141803	ø 348 x 30 x 77	⊕ police veh. ⊕ incr. payload			97032200			
					TPM0003								
85100			Ate		2331211	[o] 23312 20.3		Ate		2373201	[o] 23732 17.3		
525 d xDrive	09/08→03/10	145 / 197											
525 i xDrive	09/08→03/10	160 / 218	Ate	epad	2331282	[o] 23312 20.3		Ate	epad	2373281	[o] 23732 17.3		
525 xd	01/07→03/10	145 / 197											
525 xi	07/05→03/10	160 / 218			98030400	L670				98030500	L685		
525 xi	01/07→03/10	160 / 218											
530 d xDrive	09/08→03/10	173 / 235	Ate		82062900			Ate		82062900			
530 i xDrive	09/08→03/10	200 / 272											
530 xd	07/05→03/10	170 / 231	Ate		82072000			Ate		82072700			
530 xd	01/07→03/10	173 / 235											
530 xi	07/05→03/10	190 / 258		PRO	92122603	ø 324 x 30 x 77.2			PRO	92202003	ø 320 x 20 x 86		
				PRO	92122605	ø 324 x 30 x 77.2				TPM0003			
					TPM0003					91058700	ø 185 x 30		
										97032200			
85200			Ate		2331211	[o] 23312 20.3	⊕ autom.	Ate		2373201	[o] 23732 17.3		
525 i	07/03→12/09	137 / 186	Ate	epad	2331282	[o] 23312 20.3	⊕ autom.	Ate	epad	2373281	[o] 23732 17.3		
			Ate		2379301	[o] 23793 20.3	⊖ autom.			98030500	L685		
			Ate	epad	2379381	[o] 23793 20.3	⊖ autom.	Ate		82062900			
					98030400	L670		Ate		82072700			
			Ate		82062900				PRO	92122703	ø 320 x 20 x 63		
			Ate		82072000		⊕ autom.			TPM0003			
			Ate		82074500		⊖ autom.			91058700	ø 185 x 30		
				PRO	92122503	ø 310 x 24 x 77	⊖ autom.			97032200			
				PRO	92122505	ø 310 x 24 x 77	⊖ autom.						
				PRO	92122603	ø 324 x 30 x 77.2	⊕ autom.						
				PRO	92122605	ø 324 x 30 x 77.2	⊕ autom.						
					TPM0003								
85300			Ate		2331211	[o] 23312 20.3	Ø 324 mm	Ate		2373201	[o] 23732 17.3		
525 i	07/05→03/10	160 / 218	Ate	epad	2331282	[o] 23312 20.3	Ø 324 mm	Ate	epad	2373281	[o] 23732 17.3		
			Ate		2379301	[o] 23793 20.3	Ø 310 mm			98030500	L685		
			Ate	epad	2379381	[o] 23793 20.3	Ø 310 mm	Ate		82062900			

→

30 kW / hp

5 (E60) 07/03→03/10

525 i	07/05→03/10	85300 160 / 218			98030400	L670		Ate		82072700		
			Ate		82062900				PRO	92122703	ø 320 x 20 x 63	
			Ate		82072000		Ø 324 mm		PRO	92182503	ø 345 x 24 x 63	
			Ate		82074500		Ø 310 mm			TPM0003		
				PRO	92122503	ø 310 x 24 x 77				91058700	ø 185 x 30	
				PRO	92122505	ø 310 x 24 x 77				97032200		
				PRO	92122603	ø 324 x 30 x 77.2						
				PRO	92122605	ø 324 x 30 x 77.2						
					TPM0003							
525 i	01/07→03/10	85400 160 / 218	Ate		2331211	[o] 23312 20.3		Ate		2373001	[o] 23730 17.3	⊕ governm. veh. ⊕ incr. payload
			Ate	epad	2331282	[o] 23312 20.3		Ate	epad	2373081	[o] 23730 17.3	⊕ governm. veh. ⊕ incr. payload
					98030400	L670		Ate		2373201	[o] 23732 17.3	⊖ governm. veh. ⊖ incr. payload
			Ate		82062900			Ate	epad	2373281	[o] 23732 17.3	⊖ governm. veh. ⊖ incr. payload
			Ate		82072000					98030500	L685	
				PRO	92122603	ø 324 x 30 x 77.2	⊖ governm. veh. ⊖ incr. payload	Ate		82057500		⊕ governm. veh. ⊕ incr. payload
				PRO	92122605	ø 324 x 30 x 77.2	⊖ governm. veh. ⊖ incr. payload	Ate		82062900		
				PRO	92141803	ø 348 x 30 x 77	⊕ governm. veh. ⊕ incr. payload	Ate		82072700		⊖ governm. veh. ⊖ incr. payload
					TPM0003				PRO	92122703	ø 320 x 20 x 63	⊖ governm. veh. ⊖ incr. payload
									PRO	92182503	ø 345 x 24 x 63	⊕ incr. payload ⊕ governm. veh.
										TPM0003		
										91058700	ø 185 x 30	
										97032200		
528 i xDrive	09/07→03/10	85500 171 / 233	Ate		2331211	[o] 23312 20.3	11/07→	Ate		2373201	[o] 23732 17.3	
			Ate	epad	2331282	[o] 23312 20.3	11/07→	Ate	epad	2373281	[o] 23732 17.3	
					98030400	L670				98030500	L685	
			Ate		82072000			Ate		82072700		
										TPM0003		
										91058700	ø 185 x 30	
										97032200		
530 d	07/03→03/10	85600 155 / 211	Ate		2331211	[o] 23312 20.3		Ate		2373001	[o] 23730 17.3	⊖ governm. veh.
			Ate	epad	2331282	[o] 23312 20.3		Ate	epad	2373081	[o] 23730 17.3	⊖ governm. veh.
					98030400	L670	left	Ate		2373201	[o] 23732 17.3	⊕ governm. veh.
			Ate		82062900			Ate	epad	2373281	[o] 23732 17.3	⊕ governm. veh.
			Ate		82072000					98030500	L685	
				PRO	92122603	ø 324 x 30 x 77.2	⊖ governm. veh.	Ate		82057500		⊖ governm. veh.
				PRO	92122605	ø 324 x 30 x 77.2	⊖ governm. veh.	Ate		82062900		
				PRO	92141803	ø 348 x 30 x 77	⊕ governm. veh.	Ate		82072700		⊕ governm. veh.
					TPM0003		2x		PRO	92122703	ø 320 x 20 x 63	⊕ governm. veh.
									PRO	92182503	ø 345 x 24 x 63	⊖ governm. veh.
										TPM0003		2x

BMW

BMW

30 kW / hp

5 (E60) 07/03→03/10

530 d	07/03→03/10	85600 155 / 211								91058700	ø 185 x 30	
										97032200		
530 d 530 d 530 d	07/03→03/10 07/03→03/10 01/07→03/10	85700 160 / 218 170 / 231 173 / 235	Ate		2331211	[o] 23312 20.3		Ate		2373001	[o] 23730 17.3	⊕ governm. veh.
			Ate	epad	2331282	[o] 23312 20.3		Ate	epad	2373081	[o] 23730 17.3	⊕ governm. veh.
					98030400	L670		Ate		2373201	[o] 23732 17.3	⊖ governm. veh.
			Ate		82062900			Ate	epad	2373281	[o] 23732 17.3	⊖ governm. veh.
			Ate		82072000					98031100	L883	
				PRO	92122603	ø 324 x 30 x 77.2	⊖ governm. veh.	Ate		82057500		⊕ governm. veh.
				PRO	92122605	ø 324 x 30 x 77.2	⊖ governm. veh.	Ate		82062900		
				PRO	92141803	ø 348 x 30 x 77	⊕ governm. veh.	Ate		82072700		⊖ governm. veh.
					TPM0003				PRO	92122703	ø 320 x 20 x 63	⊖ governm. veh.
									PRO	92182503	ø 345 x 24 x 63	⊕ governm. veh.
										TPM0003		
										91058700	ø 185 x 30	
										97032200		
530 i	07/03→03/10	85800 170 / 231	Ate		2331211	[o] 23312 20.3		Ate		2373201	[o] 23732 17.3	
			Ate	epad	2331282	[o] 23312 20.3		Ate	epad	2373281	[o] 23732 17.3	
					98030400	L670				98030500	L685	
			Ate		82062900			Ate		82062900		
			Ate		82072000			Ate		82072700		
				PRO	92122603	ø 324 x 30 x 77.2			PRO	92182503	ø 345 x 24 x 63	
				PRO	92122605	ø 324 x 30 x 77.2				TPM0003		
					TPM0003					91058700	ø 185 x 30	
										97032200		
530 i	03/05→03/10	85900 187 / 254	Ate		2331211	[o] 23312 20.3		Ate		2373201	[o] 23732 17.3	
			Ate	epad	2331282	[o] 23312 20.3		Ate	epad	2373281	[o] 23732 17.3	
					98030400	L670				98030500	L685	
			Ate		82062900			Ate		82062900		
			Ate		82072000			Ate		82072700		
				PRO	92122603	ø 324 x 30 x 77.2			PRO	92122703	ø 320 x 20 x 63	
				PRO	92122605	ø 324 x 30 x 77.2				TPM0003		
					TPM0003					91058700	ø 185 x 30	
										97032200		
530 i	07/05→03/10	86000 190 / 258	Ate		2331211	[o] 23312 20.3	⊕ governm. veh.	Ate		2373001	[o] 23730 17.3	⊕ arm.veh. ⊕ governm. veh.
			Ate	epad	2331282	[o] 23312 20.3	⊕ governm. veh.	Ate	epad	2373081	[o] 23730 17.3	⊕ arm.veh. ⊕ governm. veh.
					98030400	L670		Ate		2373201	[o] 23732 17.3	⊖ arm.veh. ⊖ governm. veh.
			Ate		82062900			Ate	epad	2373281	[o] 23732 17.3	⊖ arm.veh. ⊖ governm. veh.
			Ate		82072000					98030500	L685	
				PRO	92122603	ø 324 x 30 x 77.2	⊖ governm. veh.	Ate		82057500		⊕ arm.veh. ⊕ governm. veh.
				PRO	92122605	ø 324 x 30 x 77.2	⊖ governm. veh.	Ate		82062900		

→

		kW / hp											
5 (E60) 07/03→03/10													
		86000		PRO	92141803	ø 348 x 30 x 77	⊕ governm. veh.	Ate		82072700		⊖ arm.veh. ⊖ governm. veh.
530 i	07/05→03/10	190 / 258			TPM0003				PRO	92122703	ø 320 x 20 x 63	⊖ arm.veh. ⊖ governm. veh.
									PRO	92182503	ø 345 x 24 x 63	⊕ arm.veh. ⊕ governm. veh.
										TPM0003		
										91058700	ø 185 x 30	
										97032200		
		86100	Ate		2331211	[o] 23312 20.3		Ate		2373001	[o] 23730 17.3	
530 i	01/07→03/10	200 / 272										
540 i	07/05→03/10	225 / 306	Ate	epad	2331282	[o] 23312 20.3		Ate	epad	2373081	[o] 23730 17.3	
545 i	09/03→03/10	245 / 333			98030400	L670				98031100	L883	
			Ate		82062900			Ate		82057500		
			Ate		82072000			Ate		82062900		
				PRO	92141803	ø 348 x 30 x 77			PRO	92182503	ø 345 x 24 x 63	
					TPM0003					TPM0003		
										91058700	ø 185 x 30	
										97032200		
		86200	Ate		2331211	[o] 23312 20.3		Ate		2373201	[o] 23732 17.3	
530 i	09/07→12/09	168 / 228	Ate	epad	2331282	[o] 23312 20.3		Ate	epad	2373281	[o] 23732 17.3	
					98030500	L685				98030500	L685	
			Ate		82062900			Ate		82062900		
			Ate		82072000			Ate		82072700		
				PRO	92122603	ø 324 x 30 x 77.2			PRO	92122703	ø 320 x 20 x 63	
				PRO	92122605	ø 324 x 30 x 77.2				TPM0003		
					TPM0003							
		86300	Ate		2331211	[o] 23312 20.3		Ate		2373201	[o] 23732 17.3	
530 xi	01/07→03/10	200 / 272	Ate	epad	2331282	[o] 23312 20.3		Ate	epad	2373281	[o] 23732 17.3	
					98030400	L670				98030500	L685	
			Ate		82062900			Ate		82062900		
				PRO	92122603	ø 324 x 30 x 77.2		Ate		82072700		
				PRO	92122605	ø 324 x 30 x 77.2			PRO	92202003	ø 320 x 20 x 86	
										91058700	ø 185 x 30	
										97032200		
		86400	Ate		2379101	[o] 23791 20.8		Ate		2373001	[o] 23730 17.3	
535 d	09/04→03/10	200 / 272										
535 d	01/07→03/10	210 / 286	Ate	epad	2379181	[o] 23791 20.8		Ate	epad	2373081	[o] 23730 17.3	
					98030400	L670				98031100	L883	
			Ate		82062900			Ate		82057500		
			Ate		82504100			Ate		82062900		
				PRO	92182403	ø 348 x 36 x 77			PRO	92182503	ø 345 x 24 x 63	
					TPM0003					TPM0003		
										91058700	ø 185 x 30	
										97032200		

BMW

BMW

30 kW / hp

5 (E60) 07/03→03/10

535 i	09/07→03/10	86500 224 / 305	Ate		2331211	[o] 23312 20.3		Ate		2373001	[o] 23730 17.3	
			Ate	epad	2331282	[o] 23312 20.3		Ate	epad	2373081	[o] 23730 17.3	
					98030400	L670	left			98030500	L685	
			Ate		82072000			Ate		82057500		
					TPM0003				PRO	92182503	ø 345 x 24 x 63	
										TPM0003		
										91058700	ø 185 x 30	
										97032200		
535 ix	09/08→12/09	86600 224 / 305	Ate		2331211	[o] 23312 20.3		Ate		2373201	[o] 23732 17.3	
			Ate	epad	2331282	[o] 23312 20.3		Ate	epad	2373281	[o] 23732 17.3	
					98030400	L670				98030500	L685	
			Ate		82072000			Ate		82072700		
									PRO	92202003	ø 320 x 20 x 86	
										TPM0003		
										91058700	ø 185 x 30	
										97032200		
540 i	08/05→03/10	86700 225 / 306	Ate		2331211	[o] 23312 20.3		Ate		2373001	[o] 23730 17.3	
			Ate	epad	2331282	[o] 23312 20.3		Ate	epad	2373081	[o] 23730 17.3	
					98030400	L670				98030500	L685	
			Ate		82062900			Ate		82057500		
			Ate		82072000			Ate		82062900		
				PRO	92141803	ø 348 x 30 x 77			PRO	92182503	ø 345 x 24 x 63	
					TPM0003					TPM0003		
										91058700	ø 185 x 30	
										97032200		
540 i	09/05→02/10	86800 225 / 306	Ate		2331211	[o] 23312 20.3		Ate		2373001	[o] 23730 17.3	
			Ate	epad	2331282	[o] 23312 20.3		Ate	epad	2373081	[o] 23730 17.3	
					98030400	L670	left			98030500	L685	
					TPM0003			Ate		82057500		
									PRO	92182503	ø 345 x 24 x 63	
										TPM0003		
										91058700	ø 185 x 30	
										97032200		
545 i 550 i 550 i	09/03→12/05 09/05→03/10 09/07→03/10	86900 242 / 329 261 / 355 261 / 355	Ate		2331211	[o] 23312 20.3		Ate		2373001	[o] 23730 17.3	
			Ate	epad	2331282	[o] 23312 20.3		Ate	epad	2373081	[o] 23730 17.3	
					98030400	L670	left			98030500	L685	
			Ate		82072000			Ate		82057500		
					TPM0003				PRO	92182503	ø 345 x 24 x 63	
										TPM0003		
										91058700	ø 185 x 30	

→

5 (E60) 07/03→03/10

		87000	Ate		2331211	[o] 23312 20.3		Ate		2373001	[o] 23730 17.3	
550 i	07/05→03/10	270 / 367	Ate	epad	2331282	[o] 23312 20.3		Ate	epad	2373081	[o] 23730 17.3	
			Ate		2379101	[o] 23791 20.8				98030500	L685	
			Ate	epad	2379181	[o] 23791 20.8		Ate		82057500		
					98030400	L670		Ate		82062900		
			Ate		82062900				PRO	92182503	ø 345 x 24 x 63	
			Ate		82504100					TPM0003		
				PRO	92182403	ø 348 x 36 x 77				91058700	ø 185 x 30	
					TPM0003					97032200		
		87100	Ate		2379101	[o] 23791 20.8	→09/08	Ate		2373001	[o] 23730 17.3	
M	09/04→03/10	373 / 507	Ate	epad	2379181	[o] 23791 20.8	→09/08	Ate	epad	2373081	[o] 23730 17.3	
			Ate		2432801	[o] 24328 20.8	10/08→			98030500	L685	
					98030400	L670	left	Ate		82057500		
					98041200	L689	right	Ate		82062900		
			Ate		82062900					TPM0003		
			Ate		82504100					91058700	ø 185 x 30	
					TPM0009					97032200		

5 (F10, F18) 03/10→12/11

		87200	Ate		2469701	[o] 24697 19.3		TRW		2456101	[o] 24561 18	
518 d	01/13→	105 / 143										
520 d	03/10→	135 / 184	Ate	epad	2469781	[o] 24697 19.3		TRW	epad	2456181	[o] 24561 18	
520 d xDrive	02/13→	135 / 184										
520 i	09/11→	120 / 163			98042400	L1083				98043300	L915	
520 i	09/11→	135 / 184	Ate		82062900			Luc		82518900		
523 i	03/10→	150 / 204	Ate		82074500					TPM0003		
523 i	03/10→	150 / 204			TPM0003							
		87300	Ate		2469701	[o] 24697 19.3		TRW		2456101	[o] 24561 18	
518 d	07/14→	110 / 150										
520 d	07/14→	140 / 190	Ate	epad	2469781	[o] 24697 19.3		TRW	epad	2456181	[o] 24561 18	
520 d xDrive	07/14→	140 / 190										
					98042400	L1083				98043300	L915	
			Ate		82074500					TPM0003		
					TPM0003							
		87400	Ate		2468801	[o] 24688 19.2	⊖ high speed br. sys. Ø 348 mm	TRW		2456101	[o] 24561 18	
525 d	03/10→	150 / 204										
525 d	09/11→	155 / 211	Ate	epad	2468881	[o] 24688 19.2	⊖ high speed br. sys. Ø 348 mm	TRW	epad	2456181	[o] 24561 18	
525 d	09/11→	160 / 218										
			Ate		2469701	[o] 24697 19.3	⊖ high speed br. sys. Ø 330 mm			98043300	L915	
			Ate	epad	2469781	[o] 24697 19.3	⊖ high speed br. sys. Ø 330 mm	Luc		82518900		
			Ate		2504501	[o] 25045 19.3	⊕ high speed br. sys.			TPM0003		
			Ate	epad	2504581	[o] 25045 19.3	⊕ high speed br. sys.					
					98042400	L1083						
			Ate		82062900							
			Ate		82074500		⊖ high speed br. sys. Ø 330 mm					
			Ate		82517700		⊖ high speed br. sys. Ø 348 mm					
				PRO	92253703	ø 348 x 36 x 66	left ⊕ high speed br. sys.					

BMW

BMW

		kW / hp										
5 (F10, F18)		**03/10→12/11**										
87400												
525 d	03/10→	150 / 204		PRO	**92253803**	ø 348 x 36 x 66	right ⊕ high speed br. sys.					
525 d	09/11→	155 / 211			**TPM0003**							
525 d	09/11→	160 / 218										
87500			Ate		**2468801**	[o] 24688 19.2	⊖ RUS	TRW		**2456101**	[o] 24561 18	
525 d xDrive	09/11→	155 / 211										
525 d xDrive	09/11→	160 / 218	Ate	epad	**2468881**	[o] 24688 19.2	⊖ RUS	TRW	epad	**2456181**	[o] 24561 18	
			Ate		**2469701**	[o] 24697 19.3	⊕ RUS			**98043300**	L915	
			Ate	epad	**2469781**	[o] 24697 19.3	⊕ RUS	Luc		**82518900**		
					98042400	L1083				**TPM0003**		
			Ate		**82062900**							
			Ate		**82074500**		⊕ RUS					
			Ate		**82517700**		⊖ RUS					
					TPM0003							
87600			Ate		**2468801**	[o] 24688 19.2	⊖ high speed br. sys.	TRW		**2456101**	[o] 24561 18	
528 i	03/10→	190 / 258										
528 i	09/11→	180 / 245	Ate	epad	**2468881**	[o] 24688 19.2	⊖ high speed br. sys.	TRW	epad	**2456181**	[o] 24561 18	
530 i	09/11→	200 / 272	Ate		**2504501**	[o] 25045 19.3	⊕ high speed br. sys.			**98043300**	L915	
			Ate	epad	**2504581**	[o] 25045 19.3	⊕ high speed br. sys.	Luc		**82518900**		
					98042400	L1083				**TPM0003**		
			Ate		**82062900**							
			Ate		**82517700**		⊖ high speed br. sys.					
				PRO	**92253703**	ø 348 x 36 x 66	left ⊕ high speed br. sys.					
				PRO	**92253803**	ø 348 x 36 x 66	right ⊕ high speed br. sys.					
					TPM0003							
87700			Ate		**2469701**	[o] 24697 19.3	⊖ high speed br. sys.	TRW		**2456101**	[o] 24561 18	
528 i	09/10→12/11	179 / 243										
			Ate	epad	**2469781**	[o] 24697 19.3	⊖ high speed br. sys.	TRW	epad	**2456181**	[o] 24561 18	
			Ate		**2504501**	[o] 25045 19.3	⊕ high speed br. sys.			**98043300**	L915	
			Ate	epad	**2504581**	[o] 25045 19.3	⊕ high speed br. sys.			**TPM0003**		
					98042400	L1083						
			Ate		**82074500**		⊖ high speed br. sys.					
			Ate		**82517700**		⊕ high speed br. sys.					
				PRO	**92253703**	ø 348 x 36 x 66	left ⊕ high speed br. sys.					
				PRO	**92253803**	ø 348 x 36 x 66	right ⊕ high speed br. sys.					
					TPM0003							
87800			Ate		**2468801**	[o] 24688 19.2		TRW		**2456101**	[o] 24561 18	
528 i xDrive	09/11→	180 / 245										
			Ate	epad	**2468881**	[o] 24688 19.2		TRW	epad	**2456181**	[o] 24561 18	
					98042400	L1083				**98043300**	L915	
			Ate		**82062900**			Luc		**82518900**		
			Ate		**82517700**					**TPM0003**		
					TPM0003							
87900			Ate		**2468801**	[o] 24688 19.2	⊖ high speed br. sys.	TRW		**2456101**	[o] 24561 18	Ø 330 mm
530 d	03/10→	180 / 245										
			Ate	epad	**2468881**	[o] 24688 19.2	⊖ high speed br. sys.	TRW	epad	**2456181**	[o] 24561 18	Ø 330 mm
			Ate		**2504501**	[o] 25045 19.3	⊕ high speed br. sys.	TRW		**2470301**	[o] 24703 18	Ø 345 mm

→

		kW / hp												
5 (F10, F18)		**03/10→12/11**												
		87900	Ate		**2504581**	[o] 25045 19.3	⊕ high speed br. sys.		TRW		**2470381**	[o] 24703 18	Ø 345 mm
530 d	03/10→	180 / 245			**98042400**	L1083					**98043300**	L915	
			Ate		**82062900**				Luc		**82518900**		
			Ate		**82517700**		⊖ high speed br. sys.				**92253903**	ø 345 x 24 x 69	
			Ate		**82517700**		⊕ high speed br. sys.				**TPM0003**		
					92253703	ø 348 x 36 x 66	left ⊕ high speed br. sys.						
					92253803	ø 348 x 36 x 66	right ⊕ high speed br. sys.						
					TPM0003								
		88000	Ate		**2468801**	[o] 24688 19.2	⊖ high speed br. sys.		TRW		**2456101**	[o] 24561 18	Ø 330 mm
530 d	09/11→	190 / 258											
530 d xDrive	09/11→	190 / 258	Ate		**2468881**	[o] 24688 19.2	⊖ high speed br. sys.		TRW		**2456181**	[o] 24561 18	Ø 330 mm
			Ate		**2504501**	[o] 25045 19.3	⊕ high speed br. sys.		TRW		**2470301**	[o] 24703 18	Ø 345 mm
			Ate		**2504581**	[o] 25045 19.3	⊕ high speed br. sys.		TRW		**2470381**	[o] 24703 18	Ø 345 mm
					98042400	L1083					**98043300**	L915	
			Ate		**82062900**				Luc		**82518900**		
			Ate		**82517700**		⊖ high speed br. sys.				**92253903**	ø 345 x 24 x 69	
					92253703	ø 348 x 36 x 66	left ⊕ high speed br. sys.				**TPM0003**		
					92253803	ø 348 x 36 x 66	right ⊕ high speed br. sys.						
					TPM0003								
		88100	Ate		**2504501**	[o] 25045 19.3			TRW		**2470301**	[o] 24703 18	
535 d	09/10→	220 / 299											
535 d	09/11→	230 / 313	Ate		**2504581**	[o] 25045 19.3			TRW		**2470381**	[o] 24703 18	
535 d xDrive	09/11→	230 / 313			**98042400**	L1083					**98043300**	L915	
			Ate		**82062900**						**92253903**	ø 345 x 24 x 69	
			Ate		**82517700**						**TPM0003**		
					92253703	ø 348 x 36 x 66	left						
					92253803	ø 348 x 36 x 66	right						
					TPM0003								
		88200	Ate		**2468801**	[o] 24688 19.2	⊕ USA		TRW		**2456101**	[o] 24561 18	⊕ USA
535 i	03/10→	225 / 306											
535 i	03/10→	225 / 306	Ate		**2468881**	[o] 24688 19.2	⊕ USA		TRW		**2456181**	[o] 24561 18	⊕ USA
535 i xDrive	03/10→	225 / 306											
ActiveHybrid	09/11→	225 / 306	Ate		**2504501**	[o] 25045 19.3	⊖ USA		TRW		**2470301**	[o] 24703 18	⊖ USA
ActiveHybrid	09/11→	250 / 340	Ate		**2504581**	[o] 25045 19.3	⊖ USA		TRW		**2470381**	[o] 24703 18	⊖ USA
					98042400	L1083					**98043300**	L915	
			Ate		**82517700**		⊕ USA		Luc		**82518900**		⊕ USA
					92253703	ø 348 x 36 x 66	left ⊖ USA				**92253903**	ø 345 x 24 x 69	⊖ USA
					92253803	ø 348 x 36 x 66	right ⊖ USA				**TPM0003**		
					TPM0003								
		88300	Ate		**2468801**	[o] 24688 19.2	⊖ M-technology		TRW		**2470301**	[o] 24703 18	
535 i	03/10→	240 / 326											
535 i xDrive	03/10→	240 / 326	Ate		**2468881**	[o] 24688 19.2	⊖ M-technology		TRW		**2470381**	[o] 24703 18	
			Ate		**2504501**	[o] 25045 19.3	⊕ M-technology 2014-07→				**98043300**	L915	
			Ate		**2504581**	[o] 25045 19.3	⊕ M-technology 2014-07→				**92253903**	ø 345 x 24 x 69	
					98042400	L1083	left				**TPM0003**		

BMW

BMW

		kW / hp											
5 (F10, F18) 03/10→12/11													
88300			Ate		82517700		left ⊖ M-technology ⊕ M-technology 2014-07→						
535 i	03/10→	240 / 326		PRO	92253703	ø 348 x 36 x 66	left						
535 i xDrive	03/10→	240 / 326		PRO	92253803	ø 348 x 36 x 66	right						
					TPM0003								
88400			Ate		2468801	[o] 24688 19.2	⊕ M-technology	TRW		2456101	[o] 24561 18	⊕ M-technology	
535 i	09/10→	224 / 305	Ate	epad	2468881	[o] 24688 19.2	⊕ M-technology	TRW	epad	2456181	[o] 24561 18	⊕ M-technology	
			Ate		2504501	[o] 25045 19.3	⊖ M-technology	TRW		2470301	[o] 24703 18	⊖ M-technology	
			Ate	epad	2504581	[o] 25045 19.3	⊖ M-technology	TRW	epad	2470381	[o] 24703 18	⊖ M-technology	
					98042400	L1083	left			98043300	L915		
				PRO	92253703	ø 348 x 36 x 66	left	Ate		82517700			
				PRO	92253803	ø 348 x 36 x 66	right		PRO	92253903	ø 345 x 24 x 69	⊖ M-technology	
					TPM0003					TPM0003			
88500			Ate		2504501	[o] 25045 19.3		TRW		2470301	[o] 24703 18		
550 i	03/10→	300 / 408											
550 i	05/13→	330 / 449	Ate	epad	2504581	[o] 25045 19.3		TRW	epad	2470381	[o] 24703 18		
550 i xDrive	09/10→	300 / 408											
550 i xDrive	05/13→	330 / 449											
M 550 d xDrive	01/12→	280 / 381			98042400	L1083				98043300	L915		
			Ate		82062900				PRO	92253903	ø 345 x 24 x 69		
			Ate		82517700					TPM0003			
				PRO	92253703	ø 348 x 36 x 66	left ⊕ sport pack.						
				PRO	92253803	ø 348 x 36 x 66	right ⊕ sport pack.						
					TPM0003								
88600			Ate		2504501	[o] 25045 19.3		TRW		2470301	[o] 24703 18		
550 i	09/12→	298 / 405											
550 i xDrive	09/12→	298 / 405	Ate	epad	2504581	[o] 25045 19.3		TRW	epad	2470381	[o] 24703 18		
					98042400	L1083				98043300	L915		
			Ate		82517700				PRO	92253903	ø 345 x 24 x 69		
				PRO	92253703	ø 348 x 36 x 66	left			TPM0003			
				PRO	92253803	ø 348 x 36 x 66	right						
					TPM0003								
88700			Bre		2513301	[o] 25133 20.4	⊖ ceramic brake	TRW		2470301	[o] 24703 18	⊖ ceramic brake	
M5	06/11→	412 / 560			98042400	L1083		TRW	epad	2470381	[o] 24703 18	⊖ ceramic brake	
					TPM0009		2x			98047700	L1000		
										TPM0003		2x	
88800			Bre		2513301	[o] 25133 20.4	⊖ ceramic brake	TRW		2470301	[o] 24703 18		
M5	01/14→	423 / 575			98042400	L1083		TRW	epad	2470381	[o] 24703 18		
					TPM0009					98047700	L1000		
										TPM0003			
88900			Bre		2513301	[o] 25133 20.4	⊖ ceramic brake	TRW		2470301	[o] 24703 18	⊖ ceramic brake	
M5	07/14→	441 / 600			98042400	L1083	left	TRW	epad	2470381	[o] 24703 18	⊖ ceramic brake	
					TPM0009					98047700	L1000		
										TPM0003			

		kW / hp											
5 Gran Turismo (F07) 10/09→12/10													
		89000	Ate		2504501	[o] 25045 19.3		Ate		2373101	[o] 23731 16.9	
520 d	10/11→	135 / 184										
530 d	10/09→	180 / 245	Ate	epad	2504581	[o] 25045 19.3				98043200	L1055	
530 d	10/09→	190 / 258										
530 d	07/10→	155 / 211			98042400	L1083		Ate		82057500		
530 d xDrive	10/09→	190 / 258										
530 d xDrive	09/10→	180 / 245	Ate		82062900			Ate		82062900		
535 d	09/10→	220 / 299										
535 d	02/12→	230 / 313	Ate		82517700				PRO	92253903	ø 345 x 24 x 69	
535 d xDrive	09/10→	220 / 299										
535 d xDrive	02/12→	230 / 313		PRO	92253703	ø 348 x 36 x 66	left			TPM0003		
535 i	10/09→	225 / 306										
535 i xDrive	09/10→	225 / 306		PRO	92253803	ø 348 x 36 x 66	right			91058700	ø 185 x 30	
					TPM0003					97032200		
		89100	Ate		2443601	[o] 24436 19.9	⊖ USA	Ate		2373101	[o] 23731 16.9	
550 i	10/09→	300 / 408										
550 i	05/12→	330 / 449	Ate		2504501	[o] 25045 19.3	⊕ USA			98043200	L1055	
550 i xDrive	09/10→	300 / 408										
550 i xDrive	05/12→	330 / 449	Ate	epad	2504581	[o] 25045 19.3	⊕ USA	Ate		82057500		
					98042400	L1083		Ate		82062900		
			Ate		82062900					TPM0003		
			Ate		82517700		⊕ USA			91058700	ø 185 x 30	
					TPM0003					97032200		
		89200	Ate		2443601	[o] 24436 19.9	⊖ USA	Ate		2373101	[o] 23731 16.9	
550 i	10/09→12/10	298 / 405										
			Ate		2504501	[o] 25045 19.3	⊕ USA			98043200	L1055	
			Ate	epad	2504581	[o] 25045 19.3	⊕ USA	Ate		82057500		
					98042400	L1083	left			TPM0003		
			Ate		82517700		⊕ USA			91058700	ø 185 x 30	
					TPM0003					97032200		
		89300	Ate		2504501	[o] 25045 19.3				98043200	L1055	
550 i xDrive	09/10→	298 / 405	Ate	epad	2504581	[o] 25045 19.3		Ate		82057500		
					98042400	L1083	left			TPM0003		
			Ate		82517700					91058700	ø 185 x 30	
					TPM0003					97032200		
5 Saloon (E39) 11/95→12/04 → 5 (E39), Page 160													
5 Saloon (E60) 07/03→03/10 → 5 (E60), Page 164													
5 Stufenheck (E39) 11/95→12/04 → 5 (E39), Page 160													
5 Stufenheck (E60) 07/03→03/10 → 5 (E60), Page 164													
5 Touring (E39) 01/97→05/04													
		89400	Ate		2148602	[o] 21486 19.3	⊕ governm. veh.	Ate		2169103	[o] 21691 17.3	
520 d	02/00→09/03	100 / 136										
520 i	09/00→05/04	125 / 170	Ate	epad	2148681	[o] 21486 19.3	⊕ governm. veh.	Ate	epad	2169181	[o] 21691 17.3	
525 d	02/00→05/04	120 / 163										
			Ate		2199003	[o] 21990 20.3	⊖ governm. veh.			98024900	L1100	
			Ate	epad	2199081	[o] 21990 20.3	⊖ governm. veh.	Ate		82062900		
					98020600	L840		Ate		82071500		
			Ate		82062900				PRO	92075103	ø 298 x 20 x 61	
			Ate		82072800		⊖ governm. veh.			TPM0003		
				PRO	92075003	ø 296 x 22 x 76				91049300	ø 185 x 20	
				PRO	92075005	ø 296 x 22 x 76				97003100		
					TPM0003							

BMW

BMW

30 kW / hp

5 Touring (E39) 01/97→05/04

		89500	Ate		2199003	[o] 21990 20.3		Ate		2169103	[o] 21691 17.3	
520 i	01/97→09/00	110 / 150										
520 i	04/99→05/04	100 / 136	Ate	epad	2199081	[o] 21990 20.3		Ate	epad	2169181	[o] 21691 17.3	
523 i	01/97→09/00	125 / 170										
525 tds	03/97→05/04	105 / 143			98020600	L840				98024900	L1100	
528 i	01/97→09/00	142 / 193										
530 d	08/98→09/00	135 / 184	Ate		82062900			Ate		82062900		
			Ate		82072800			Ate		82071500		
				PRO	92075003	ø 296 x 22 x 76			PRO	92075103	ø 298 x 20 x 61	
				PRO	92075005	ø 296 x 22 x 76				TPM0003		
					TPM0003					91049300	ø 185 x 20	
										97003100		
		89600	Ate		2199003	[o] 21990 20.3		Ate		2169103	[o] 21691 17.3	
525 i	09/00→12/03	137 / 186										
			Ate	epad	2199081	[o] 21990 20.3		Ate	epad	2169181	[o] 21691 17.3	
					98020600	L840				98024900	L1100	
			Ate		82072800				PRO	92075103	ø 298 x 20 x 61	
					92107100	ø 324 x 30 x 73.5	⊖ spec.purp.veh.			TPM0003		
				PRO	92075003	ø 296 x 22 x 76				91049300	ø 185 x 20	
				PRO	92075005	ø 296 x 22 x 76				97003100		
				PRO	92107105	ø 324 x 30 x 73.5	⊖ spec.purp.veh.					
					TPM0003							
		89700	Ate		2148602	[o] 21486 19.3	⊕ governm. veh.	Ate		2169103	[o] 21691 17.3	
525 i	09/00→05/04	141 / 192										
			Ate	epad	2148681	[o] 21486 19.3	⊕ governm. veh.	Ate	epad	2169181	[o] 21691 17.3	
			Ate		2199003	[o] 21990 20.3	⊖ governm. veh.			98024900	L1100	
			Ate	epad	2199081	[o] 21990 20.3	⊖ governm. veh.	Ate		82062900		
					98020600	L840		Ate		82071500		
			Ate		82030500		⊕ governm. veh.		PRO	92075103	ø 298 x 20 x 61	
			Ate		82062900					TPM0003		
			Ate		82072800		⊖ governm. veh.			91049300	ø 185 x 20	
				PRO	92075003	ø 296 x 22 x 76				97003100		
				PRO	92075005	ø 296 x 22 x 76						
					TPM0003							
		89800	Ate		2148602	[o] 21486 19.3		Ate		2169103	[o] 21691 17.3	
530 d	09/00→05/04	142 / 193										
530 i	09/00→05/04	170 / 231	Ate	epad	2148681	[o] 21486 19.3		Ate	epad	2169181	[o] 21691 17.3	
					98020600	L840				98024900	L1100	
			Ate		82030500			Ate		82062900		
			Ate		82062900			Ate		82071500		
					92107100	ø 324 x 30 x 73.5			PRO	92075103	ø 298 x 20 x 61	
				PRO	92107105	ø 324 x 30 x 73.5				TPM0003		
					TPM0003					91049300	ø 185 x 20	
										97003100		
		89900	Ate		2148602	[o] 21486 19.3		Ate		2169103	[o] 21691 17.3	
540 i	01/97→05/04	210 / 286										
			Ate	epad	2148681	[o] 21486 19.3		Ate	epad	2169181	[o] 21691 17.3	

→

		30 kW / hp									
5 Touring (E39) 01/97→05/04											
		89900			98020600	L840			98024900	L1100	
540 i	01/97→05/04	210 / 286	Ate		82030500		04/00→	Ate	82062900		
			Ate		82059100		→03/00	Ate	82071500		
			Ate		82062900				92075103	ø 298 x 20 x 61	
					92058300	ø 324 x 30 x 77.1	→03/00		TPM0003		
					92107100	ø 324 x 30 x 73.5	04/00→		91049300	ø 185 x 20	
					92107105	ø 324 x 30 x 73.5	04/00→		97003100		
					TPM0003						
5 Touring (E61) 06/04→12/10											
		90000	Ate		2331211	[o] 23312 20.3	⊕ governm. veh.	Ate	2373201	[o] 23732 17.3	
520 d	07/05→	120 / 163									
520 d	09/05→	110 / 150	Ate		2331282	[o] 23312 20.3	⊕ governm. veh.	Ate	2373281	[o] 23732 17.3	
525 d	06/04→	130 / 177									
525 d	12/04→	120 / 163	Ate		2379301	[o] 23793 20.3	⊖ governm. veh.		98031100	L883	
525 i	06/04→	141 / 192	Ate		2379381	[o] 23793 20.3	⊖ governm. veh.	Ate	82062900		
					98030400	L670		Ate	82072700		
			Ate		82062900				92122703	ø 320 x 20 x 63	
			Ate		82072000		⊕ governm. veh.		TPM0003		
			Ate		82074500		⊖ governm. veh.		91058700	ø 185 x 30	
					92122503	ø 310 x 24 x 77	⊖ governm. veh.		97032200		
					92122505	ø 310 x 24 x 77	⊖ governm. veh.				
					92122603	ø 324 x 30 x 77.2	⊕ governm. veh.				
					92122605	ø 324 x 30 x 77.2	⊕ governm. veh.				
					TPM0003						
		90100	Ate		2331211	[o] 23312 20.3		Ate	2373201	[o] 23732 17.3	
520 d	09/07→	130 / 177									
525 i	07/05→	160 / 218	Ate		2331282	[o] 23312 20.3		Ate	2373281	[o] 23732 17.3	
					98030400	L670			98031100	L883	
			Ate		82062900			Ate	82062900		
			Ate		82072000			Ate	82072700		
					92122603	ø 324 x 30 x 77.2			92122703	ø 320 x 20 x 63	
					92122605	ø 324 x 30 x 77.2			TPM0003		
					TPM0003				91058700	ø 185 x 30	
									97032200		
		90200	Ate		2379301	[o] 23793 20.3	⊖ M-technology	Ate	2373201	[o] 23732 17.3	⊖ M-technology
520 i	07/07→08/10	120 / 163									
			Ate		2379381	[o] 23793 20.3	⊖ M-technology	Ate	2373281	[o] 23732 17.3	⊖ M-technology
					98030400	L670	left		98031100	L883	
			Ate		82074500		⊖ M-technology	Ate	82072700		⊖ M-technology
									92122703	ø 320 x 20 x 63	⊖ M-technology
									TPM0003		
									91058700	ø 185 x 30	
									97032200		
		90300	Ate		2331211	[o] 23312 20.3	⊕ governm. veh.	Ate	2373201	[o] 23732 17.3	
520 i	09/07→	125 / 170									

BMW

BMW

			kW / hp											
5 Touring (E61) 06/04→12/10														
		90300		Ate		**2331282**	[o] 23312 20.3	⊕ governm. veh.	Ate		**2373281**	[o] 23732 17.3	
520 i	09/07→	125 / 170		Ate		**2379301**	[o] 23793 20.3	⊖ governm. veh.			**98030500**	L685	
				Ate		**2379381**	[o] 23793 20.3	⊖ governm. veh.	Ate		**82062900**		
						98030400	L670		Ate		**82072700**		
				Ate		**82062900**					**92122703**	ø 320 x 20 x 63	
				Ate		**82074500**					**TPM0003**		
						92122503	ø 310 x 24 x 77	⊖ governm. veh.			**91058700**	ø 185 x 30	
						92122505	ø 310 x 24 x 77	⊖ governm. veh.			**97032200**		
						92122603	ø 324 x 30 x 77.2	⊕ governm. veh.					
						92122605	ø 324 x 30 x 77.2	⊕ governm. veh.					
						TPM0003							
		90400		Ate		**2331211**	[o] 23312 20.3	⊕ governm. veh. ⊕ incr. payload	Ate		**2373201**	[o] 23732 17.3	
523 i	07/05→	130 / 177											
523 i	01/07→	140 / 190		Ate		**2331282**	[o] 23312 20.3	⊕ governm. veh. ⊕ incr. payload	Ate		**2373281**	[o] 23732 17.3	
				Ate		**2379301**	[o] 23793 20.3	⊖ governm. veh. ⊖ incr. payload			**98031100**	L883	
				Ate		**2379381**	[o] 23793 20.3	⊖ governm. veh. ⊖ incr. payload	Ate		**82062900**		
						98030400	L670		Ate		**82072700**		
				Ate		**82062900**					**92122703**	ø 320 x 20 x 63	
				Ate		**82072000**		⊕ governm. veh. ⊕ incr. payload			**TPM0003**		
				Ate		**82074500**		⊖ governm. veh. ⊖ incr. payload			**91058700**	ø 185 x 30	
						92122503	ø 310 x 24 x 77	⊖ governm. veh. ⊖ incr. payload			**97032200**		
						92122505	ø 310 x 24 x 77	⊖ governm. veh. ⊖ incr. payload					
						92122603	ø 324 x 30 x 77.2	⊕ governm. veh. ⊕ incr. payload					
						92122605	ø 324 x 30 x 77.2	⊕ governm. veh. ⊕ incr. payload					
						TPM0003							
		90500		Ate		**2331211**	[o] 23312 20.3	⊕ governm. veh. ⊕ incr. payload	Ate		**2373001**	[o] 23730 17.3	⊕ governm. veh. ⊕ incr. payload
525 d	01/07→	145 / 197		Ate		**2331282**	[o] 23312 20.3	⊕ governm. veh. ⊕ incr. payload	Ate		**2373081**	[o] 23730 17.3	⊕ governm. veh. ⊕ incr. payload
				Ate		**2379301**	[o] 23793 20.3	⊖ governm. veh. ⊖ incr. payload	Ate		**2373201**	[o] 23732 17.3	⊖ governm. veh. ⊖ incr. payload
				Ate		**2379381**	[o] 23793 20.3	⊖ governm. veh. ⊖ incr. payload	Ate		**2373281**	[o] 23732 17.3	⊖ governm. veh. ⊖ incr. payload
						98030400	L670				**98031100**	L883	
				Ate		**82062900**			Ate		**82057500**		⊕ governm. veh. ⊕ incr. payload
				Ate		**82072000**			Ate		**82062900**		
						92122603	ø 324 x 30 x 77.2	⊖ governm. veh. ⊖ incr. payload	Ate		**82072700**		⊖ governm. veh. ⊖ incr. payload
						92122605	ø 324 x 30 x 77.2	⊖ governm. veh. ⊖ incr. payload			**92122703**	ø 320 x 20 x 63	⊖ governm. veh. ⊖ incr. payload
						92141803	ø 348 x 30 x 77	⊕ governm. veh. ⊕ incr. payload			**92182503**	ø 345 x 24 x 63	⊕ incr. payload ⊕ governm. veh.
						TPM0003					**TPM0003**		
											91058700	ø 185 x 30	
											97032200		
		90600		Ate		**2331211**	[o] 23312 20.3		Ate		**2373201**	[o] 23732 17.3	
525 d xDrive	09/08→	145 / 197											
525 xi	01/07→	160 / 218		Ate		**2331282**	[o] 23312 20.3		Ate		**2373281**	[o] 23732 17.3	
						98030400	L670				**98031100**	L883	

→

5 Touring (E61) 06/04→12/10

		90600	Ate		82062900			Ate		82062900		
525 d xDrive	09/08→	145 / 197										
525 xi	01/07→	160 / 218	Ate		82072000			Ate		82072700		
				PRO	92122603	ø 324 x 30 x 77.2			PRO	92202003	ø 320 x 20 x 86	
				PRO	92122605	ø 324 x 30 x 77.2				TPM0003		
					TPM0003					91058700	ø 185 x 30	
										97032200		
		90700	Ate		2331211	[o] 23312 20.3		Ate		2373001	[o] 23730 17.3	⊕ governm. veh. ⊕ incr. payload
525 i	01/07→	160 / 218	Ate	epad	2331282	[o] 23312 20.3		Ate	epad	2373081	[o] 23730 17.3	⊕ governm. veh. ⊕ incr. payload
					98030400	L670		Ate		2373201	[o] 23732 17.3	⊖ governm. veh. ⊖ incr. payload
			Ate		82062900			Ate	epad	2373281	[o] 23732 17.3	⊖ governm. veh. ⊖ incr. payload
			Ate		82072000					98031100	L883	
				PRO	92122603	ø 324 x 30 x 77.2	⊖ governm. veh. ⊖ incr. payload	Ate		82057500		⊕ governm. veh. ⊕ incr. payload
				PRO	92122605	ø 324 x 30 x 77.2	⊖ governm. veh. ⊖ incr. payload	Ate		82062900		
				PRO	92141803	ø 348 x 30 x 77	⊕ governm. veh. ⊕ incr. payload	Ate		82072700		⊖ governm. veh. ⊖ incr. payload
					TPM0003				PRO	92122703	ø 320 x 20 x 63	⊖ governm. veh. ⊖ incr. payload
									PRO	92182503	ø 345 x 24 x 63	⊕ incr. payload ⊕ governm. veh.
										TPM0003		
										91058700	ø 185 x 30	
										97032200		
		90800	Ate		2331211	[o] 23312 20.3		Ate		2373201	[o] 23732 17.3	
525 i xDrive	09/08→	160 / 218										
525 xi	07/05→	160 / 218	Ate	epad	2331282	[o] 23312 20.3		Ate	epad	2373281	[o] 23732 17.3	
530 d xDrive	09/08→	173 / 235										
530 i xDrive	09/08→	200 / 272										
530 xd	07/05→	170 / 231			98030400	L670				98030500	L685	
530 xd	01/07→	173 / 235	Ate		82062900			Ate		82062900		
			Ate		82072000			Ate		82072700		
				PRO	92122603	ø 324 x 30 x 77.2			PRO	92202003	ø 320 x 20 x 86	
				PRO	92122605	ø 324 x 30 x 77.2				TPM0003		
					TPM0003					91058700	ø 185 x 30	
										97032200		
		90900	Ate		2331211	[o] 23312 20.3		Ate		2373201	[o] 23732 17.3	
525 xd	01/07→	145 / 197										
			Ate	epad	2331282	[o] 23312 20.3		Ate	epad	2373281	[o] 23732 17.3	
					98030400	L670		Ate		82062900		
			Ate		82062900			Ate		82072700		
			Ate		82072000				PRO	92202003	ø 320 x 20 x 86	
				PRO	92122603	ø 324 x 30 x 77.2				TPM0003		
				PRO	92122605	ø 324 x 30 x 77.2				91058700	ø 185 x 30	
					TPM0003					97032200		
		91000	Ate		2331211	[o] 23312 20.3		Ate		2373001	[o] 23730 17.3	⊕ governm. veh.
530 d	06/04→	160 / 218										
530 d	07/05→	170 / 231	Ate	epad	2331282	[o] 23312 20.3		Ate	epad	2373081	[o] 23730 17.3	⊕ governm. veh.
530 d	01/07→	173 / 235										
					98030400	L670		Ate		2373201	[o] 23732 17.3	⊖ governm. veh.
			Ate		82062900			Ate	epad	2373281	[o] 23732 17.3	⊖ governm. veh.

BMW

BMW

30 kW / hp

5 Touring (E61) 06/04→12/10

91000											
530 d	06/04→	160 / 218	Ate	82072000				98031100	L883		
530 d	07/05→	170 / 231	PRO	92122603	ø 324 x 30 x 77.2	⊖ governm. veh.	Ate	82057500		⊕ governm. veh.	
530 d	01/07→	173 / 235	PRO	92122605	ø 324 x 30 x 77.2	⊖ governm. veh.	Ate	82062900			
			PRO	92141803	ø 348 x 30 x 77	⊕ governm. veh.	Ate	82072700		⊖ governm. veh.	
				TPM0003			PRO	92122703	ø 320 x 20 x 63	⊖ governm. veh.	
							PRO	92182503	ø 345 x 24 x 63	⊕ governm. veh.	
								TPM0003			
								91058700	ø 185 x 30		
								97032200			
91100											
530 d	11/05→	155 / 211	Ate	2331211	[o] 23312 20.3		Ate	2373001	[o] 23730 17.3	⊖ spec.purp.veh.	
			Ate epad	2331282	[o] 23312 20.3		Ate epad	2373081	[o] 23730 17.3	⊖ spec.purp.veh.	
				98030400	L670		Ate	2373201	[o] 23732 17.3	⊖ spec.purp.veh.	
			Ate	82072000			Ate epad	2373281	[o] 23732 17.3	⊖ spec.purp.veh.	
			PRO	92122603	ø 324 x 30 x 77.2	⊖ spec.purp.veh. →2013-12		98031100	L883		
			PRO	92122605	ø 324 x 30 x 77.2	⊖ spec.purp.veh. →2013-12	Ate	82057500		⊖ spec.purp.veh.	
			PRO	92141803	ø 348 x 30 x 77	⊖ spec.purp.veh.	Ate	82072700		⊖ spec.purp.veh.	
				TPM0003			PRO	92122703	ø 320 x 20 x 63	⊖ spec.purp.veh. →2013-12	
							PRO	92182503	ø 345 x 24 x 63	⊖ spec.purp.veh.	
								TPM0003			
								91058700	ø 185 x 30		
								97032200			
91200											
530 i	07/05→	190 / 258	Ate	2331211	[o] 23312 20.3		Ate	2373201	[o] 23732 17.3		
			Ate epad	2331282	[o] 23312 20.3		Ate epad	2373281	[o] 23732 17.3		
				98030400	L670			98031100	L883		
			Ate	82062900			Ate	82062900			
			Ate	82072000			Ate	82072700			
			PRO	92122603	ø 324 x 30 x 77.2		PRO	92122703	ø 320 x 20 x 63		
			PRO	92122605	ø 324 x 30 x 77.2		PRO	92182503	ø 345 x 24 x 63		
				TPM0003				TPM0003			
								91058700	ø 185 x 30		
								97032200			
91300											
530 i	01/07→	200 / 272	Ate	2331211	[o] 23312 20.3		Ate	2373001	[o] 23730 17.3		
545 i	06/04→	245 / 333	Ate epad	2331282	[o] 23312 20.3		Ate epad	2373081	[o] 23730 17.3		
				98030400	L670			98031100	L883		
			Ate	82062900			Ate	82057500			
			Ate	82072000			Ate	82062900			
			PRO	92141803	ø 348 x 30 x 77		PRO	92182503	ø 345 x 24 x 63		
				TPM0003				TPM0003			
								91058700	ø 185 x 30		
								97032200			

→

5 Touring (E61) 06/04→12/10

		91400	Ate		2331211	[o] 23312 20.3		Ate		2373201	[o] 23732 17.3
530 xi	07/05→	190 / 258	Ate	epad	2331282	[o] 23312 20.3		Ate	epad	2373281	[o] 23732 17.3
530 xi	01/07→	200 / 272			98030400	L670				98030500	L685
			Ate		82062900			Ate		82062900	
			Ate		82072000			Ate		82072700	
				PRO	92122603	ø 324 x 30 x 77.2			PRO	92122703	ø 320 x 20 x 63
				PRO	92122605	ø 324 x 30 x 77.2				TPM0003	
					TPM0003					91058700	ø 185 x 30
										97032200	
		91500	Ate		2379101	[o] 23791 20.8		Ate		2373001	[o] 23730 17.3
535 d	09/04→	200 / 272	Ate	epad	2379181	[o] 23791 20.8		Ate	epad	2373081	[o] 23730 17.3
535 d	01/07→	210 / 286			98030400	L670				98031100	L883
			Ate		82062900			Ate		82057500	
			Ate		82504100			Ate		82062900	
				PRO	92182403	ø 348 x 36 x 77			PRO	92182503	ø 345 x 24 x 63
					TPM0003					TPM0003	
										91058700	ø 185 x 30
										97032200	
		91600	Ate		2331211	[o] 23312 20.3		Ate		2373201	[o] 23732 17.3
535 xi	09/07→12/10	224 / 305	Ate	epad	2331282	[o] 23312 20.3		Ate	epad	2373281	[o] 23732 17.3
					98030400	L670				98031100	L883
			Ate		82072000			Ate		82072700	
				PRO	92122603	ø 324 x 30 x 77.2			PRO	92202003	ø 320 x 20 x 86
				PRO	92122605	ø 324 x 30 x 77.2				TPM0003	
					TPM0003					91058700	ø 185 x 30
										97032200	
		91700	Ate		2331211	[o] 23312 20.3	⊕ USA	Ate		2373001	[o] 23730 17.3
550 i	07/05→	270 / 367	Ate	epad	2331282	[o] 23312 20.3	⊕ USA	Ate	epad	2373081	[o] 23730 17.3
			Ate		2379101	[o] 23791 20.8	⊖ USA			98031100	L883
			Ate	epad	2379181	[o] 23791 20.8	⊖ USA	Ate		82057500	
					98030400	L670		Ate		82062900	
			Ate		82062900				PRO	92182503	ø 345 x 24 x 63
			Ate		82072000					TPM0003	
				PRO	92141803	ø 348 x 30 x 77	⊕ USA			91058700	ø 185 x 30
				PRO	92182403	ø 348 x 36 x 77	⊖ USA			97032200	
					TPM0003						
		91800	Ate		2379101	[o] 23791 20.8		Ate		2373001	[o] 23730 17.3
M	02/07→	373 / 507	Ate	epad	2379181	[o] 23791 20.8		Ate	epad	2373081	[o] 23730 17.3
			Ate		2432801	[o] 24328 20.8				98030500	L685
					98030400	L670				98041600	L1005

BMW

BMW

		kW / hp											
5 Touring (E61) 06/04→12/10													
		91800		98041200	L689	right	Ate		82057500				
M	02/07→	373 / 507	Ate	82062900			Ate		82062900				
			Ate	82504100					TPM0003				
				TPM0009					91058700	ø 185 x 30			
									97032200				
5 Touring (F11) 04/10→12/11													
		91900	Ate	2468801	[o] 24688 19.2	⊕ reinf.brake	TRW		2456101	[o] 24561 18	⊖ reinf.brake		
518 d	01/13→	105 / 143											
520 d	09/10→	135 / 184	Ate	2468881	[o] 24688 19.2	⊕ reinf.brake	TRW		2456181	[o] 24561 18	⊖ reinf.brake		
520 d xDrive	02/13→	135 / 184	Ate	2469701	[o] 24697 19.3	⊖ reinf.brake	TRW		2470301	[o] 24703 18	⊕ reinf.brake		
			Ate	2469781	[o] 24697 19.3	⊖ reinf.brake	TRW		2470381	[o] 24703 18	⊕ reinf.brake		
				98042400	L1083				98047300	L1110			
			Ate	82062900			Luc		82518900		⊖ reinf.brake		
			Ate	82074500		⊖ reinf.brake			92253903	ø 345 x 24 x 69	⊕ reinf.brake		
			Ate	82517700		⊕ reinf.brake			TPM0003				
				TPM0003									
		92000	Ate	2469701	[o] 24697 19.3	⊖ reinf.brake	TRW		2456101	[o] 24561 18	⊖ reinf.brake		
518 d	05/14→	110 / 150											
520 d xDrive	05/14→	140 / 190	Ate	2469781	[o] 24697 19.3	⊖ reinf.brake	TRW		2456181	[o] 24561 18	⊖ reinf.brake		
			Ate	2504501	[o] 25045 19.3	⊕ reinf.brake	TRW		2470301	[o] 24703 18	⊕ reinf.brake		
			Ate	2504581	[o] 25045 19.3	⊕ reinf.brake	TRW		2470381	[o] 24703 18	⊕ reinf.brake		
				98042400	L1083	left			98047300	L1110			
			Ate	82074500		⊖ high speed br. sys.			92253903	ø 345 x 24 x 69	⊕ reinf.brake		
			Ate	82517700		⊕ reinf.brake			TPM0003				
				92253703	ø 348 x 36 x 66	left ⊕ reinf.brake							
				92253803	ø 348 x 36 x 66	right ⊕ reinf.brake							
				TPM0003									
		92100	Ate	2468801	[o] 24688 19.2	⊕ reinf.brake	TRW		2456101	[o] 24561 18	⊖ reinf.brake		
520 d	05/14→	140 / 190	Ate	2468881	[o] 24688 19.2	⊕ reinf.brake	TRW		2456181	[o] 24561 18	⊖ reinf.brake		
			Ate	2469701	[o] 24697 19.3	⊖ high speed br. sys.	TRW		2470301	[o] 24703 18	⊕ reinf.brake		
			Ate	2469781	[o] 24697 19.3	⊖ high speed br. sys.	TRW		2470381	[o] 24703 18	⊕ reinf.brake		
				98042400	L1083	left			98047300	L1110			
			Ate	82074500		⊖ high speed br. sys.			92253903	ø 345 x 24 x 69	⊕ reinf.brake		
			Ate	82517700		⊕ reinf.brake			TPM0003				
				TPM0003									
		92200	Ate	2469701	[o] 24697 19.3		TRW		2456101	[o] 24561 18			
520 i	09/11→	135 / 184											
523 i	09/10→	150 / 204	Ate	2469781	[o] 24697 19.3		TRW		2456181	[o] 24561 18			
				98042400	L1083				98047300	L1110			
			Ate	82062900			Luc		82518900				
			Ate	82074500					TPM0003				
				TPM0003									
		92300	Ate	2469701	[o] 24697 19.3		TRW		2456101	[o] 24561 18			
523 i	04/10→12/11	150 / 204											

→

		kW / hp											
5 Touring (F11) 04/10→12/11													
		92300	Ate		**2469781**	[o] 24697 19.3		TRW		**2456181**	[o] 24561 18	
523 i	04/10→12/11	150 / 204			**98042400**	L1083				**98047300**	L1110	
			Ate		**82074500**					**TPM0003**		
					TPM0003							
		92400	Ate		**2468801**	[o] 24688 19.2	⊖ high speed br. sys. ⊖ reinf.brake Ø 348 mm	TRW		**2456101**	[o] 24561 18	⊖ reinf.brake
525 d	09/10→	150 / 204										
525 d	09/11→	160 / 218										
525 d xDrive	09/11→	160 / 218	Ate		**2468881**	[o] 24688 19.2	⊖ high speed br. sys. ⊖ reinf.brake Ø 348 mm	TRW		**2456181**	[o] 24561 18	⊖ reinf.brake
			Ate		**2469701**	[o] 24697 19.3	⊖ reinf.brake ⊖ high speed br. sys. Ø 330 mm	TRW		**2470301**	[o] 24703 18	⊕ reinf.brake
			Ate		**2469781**	[o] 24697 19.3	⊖ reinf.brake ⊖ high speed br. sys. Ø 330 mm	TRW		**2470381**	[o] 24703 18	⊕ reinf.brake
			Ate		**2504501**	[o] 25045 19.3	⊕ reinf.brake ⊕ high speed br. sys.			**98047300**	L1110	
			Ate		**2504581**	[o] 25045 19.3	⊕ reinf.brake ⊕ high speed br. sys.	Luc		**82518900**		⊖ reinf.brake
					98042400	L1083				**92253903**	ø 345 x 24 x 69	⊕ reinf.brake
			Ate		**82062900**					**TPM0003**		
			Ate		**82074500**		⊖ reinf.brake ⊖ high speed br. sys. Ø 330 mm					
			Ate		**82517700**		⊖ reinf.brake ⊖ high speed br. sys. Ø 348 mm					
					92253703	ø 348 x 36 x 66	left ⊕ high speed br. sys. ⊕ reinf.brake					
					92253803	ø 348 x 36 x 66	right ⊕ high speed br. sys. ⊕ reinf.brake					
					TPM0003							
		92500	Ate		**2468801**	[o] 24688 19.2	⊖ high speed br. sys. ⊖ reinf.brake ⊖ USA	TRW		**2456101**	[o] 24561 18	⊖ reinf.brake
528 i	09/10→	190 / 258										
528 i	09/11→	180 / 245										
528 i xDrive	09/11→	180 / 245	Ate		**2468881**	[o] 24688 19.2	⊖ high speed br. sys. ⊖ reinf.brake ⊖ USA	TRW		**2456181**	[o] 24561 18	⊖ reinf.brake
			Ate		**2469701**	[o] 24697 19.3	⊖ reinf.brake ⊖ high speed br. sys. ⊕ USA	TRW		**2470301**	[o] 24703 18	⊕ reinf.brake
			Ate		**2469781**	[o] 24697 19.3	⊖ reinf.brake ⊖ high speed br. sys. ⊕ USA	TRW		**2470381**	[o] 24703 18	⊕ reinf.brake
			Ate		**2504501**	[o] 25045 19.3	⊕ reinf.brake ⊕ high speed br. sys. ⊖ USA			**98047300**	L1110	
			Ate		**2504581**	[o] 25045 19.3	⊕ reinf.brake ⊕ high speed br. sys. ⊖ USA	Luc		**82518900**		⊖ reinf.brake
					98042400	L1083				**92253903**	ø 345 x 24 x 69	⊕ reinf.brake
			Ate		**82062900**					**TPM0003**		
			Ate		**82074500**		⊖ reinf.brake ⊖ high speed br. sys. ⊕ USA					
			Ate		**82517700**		⊖ reinf.brake ⊖ high speed br. sys. ⊖ USA					
					92253703	ø 348 x 36 x 66	left ⊕ high speed br. sys. ⊕ reinf.brake ⊖ USA					
					92253803	ø 348 x 36 x 66	right ⊕ high speed br. sys. ⊕ reinf.brake ⊖ USA					
					TPM0003							
		92600	Ate		**2468801**	[o] 24688 19.2	⊖ reinf.brake ⊖ high speed br. sys.	TRW		**2456101**	[o] 24561 18	⊖ reinf.brake
530 d	09/10→	180 / 245										
530 d	09/11→	190 / 258										
530 d xDrive	09/11→	190 / 258	Ate		**2468881**	[o] 24688 19.2	⊖ reinf.brake ⊖ high speed br. sys.	TRW		**2456181**	[o] 24561 18	⊖ reinf.brake
			Ate		**2504501**	[o] 25045 19.3	⊕ reinf.brake ⊕ high speed br. sys.	TRW		**2470301**	[o] 24703 18	⊕ reinf.brake
			Ate		**2504581**	[o] 25045 19.3	⊕ reinf.brake ⊕ high speed br. sys.	TRW		**2470381**	[o] 24703 18	⊕ reinf.brake
					98042400	L1083				**98047300**	L1110	
			Ate		**82062900**			Luc		**82518900**		⊖ reinf.brake
			Ate		**82517700**		⊖ reinf.brake ⊖ high speed br. sys.			**92253903**	ø 345 x 24 x 69	⊕ reinf.brake ⊕ high speed br. sys.
					92253703	ø 348 x 36 x 66	left ⊕ reinf.brake ⊕ high speed br. sys.			**TPM0003**		
					92253803	ø 348 x 36 x 66	right ⊕ reinf.brake ⊕ high speed br. sys.					
					TPM0003							

BMW

BMW

kW / hp

5 Touring (F11) 04/10→12/11

92700			Ate		2468801	[o] 24688	19.2	⊖ high speed br. sys. Ø 348 mm	TRW		2456101	[o] 24561	18	
530 i	09/11→	200 / 272	Ate	epad	2468881	[o] 24688	19.2	⊖ high speed br. sys. Ø 348 mm	TRW	epad	2456181	[o] 24561	18	
			Ate		2469701	[o] 24697	19.3	⊖ high speed br. sys. Ø 330 mm			98047300	L1110		
			Ate	epad	2469781	[o] 24697	19.3	⊖ high speed br. sys. Ø 330 mm	Luc		82518900			
			Ate		2504501	[o] 25045	19.3	⊕ high speed br. sys.			TPM0003			
			Ate	epad	2504581	[o] 25045	19.3	⊕ high speed br. sys.						
					98042400	L1083								
			Ate		82062900									
			Ate		82074500			⊖ high speed br. sys. Ø 330 mm						
			Ate		82517700			⊖ high speed br. sys. Ø 348 mm						
				PRO	92253703	ø 348 x 36 x 66		left ⊕ high speed br. sys.						
				PRO	92253803	ø 348 x 36 x 66		right ⊕ high speed br. sys.						
					TPM0003									
92800			Ate		2504501	[o] 25045	19.3		TRW		2470301	[o] 24703	18	
535 d	09/10→	220 / 299												
535 d	09/11→	230 / 313	Ate	epad	2504581	[o] 25045	19.3		TRW	epad	2470381	[o] 24703	18	
535 d xDrive	09/11→	230 / 313			98042400	L1083					98047300	L1110		
			Ate		82062900					PRO	92253903	ø 345 x 24 x 69		
			Ate		82517700						TPM0003			
				PRO	92253703	ø 348 x 36 x 66		left						
				PRO	92253803	ø 348 x 36 x 66		right						
					TPM0003									
92900			Ate		2468801	[o] 24688	19.2	⊕ USA	TRW		2456101	[o] 24561	18	⊕ USA
535 i	09/10→	225 / 306												
535 i xDrive	09/11→	225 / 306	Ate	epad	2468881	[o] 24688	19.2	⊕ USA	TRW	epad	2456181	[o] 24561	18	⊕ USA
			Ate		2504501	[o] 25045	19.3	⊖ USA	TRW		2470301	[o] 24703	18	⊖ USA
			Ate	epad	2504581	[o] 25045	19.3	⊖ USA	TRW	epad	2470381	[o] 24703	18	⊖ USA
					98042400	L1083					98047300	L1110		
			Ate		82062900				Luc		82518900			⊕ USA
			Ate		82517700			⊕ USA		PRO	92253903	ø 345 x 24 x 69		⊖ USA
				PRO	92253703	ø 348 x 36 x 66		left ⊖ USA			TPM0003			
				PRO	92253803	ø 348 x 36 x 66		right ⊖ USA						
					TPM0003									
93000			Ate		2504501	[o] 25045	19.3		TRW		2470301	[o] 24703	18	
550 i	09/10→	300 / 408												
550 i	05/13→	330 / 449	Ate	epad	2504581	[o] 25045	19.3		TRW	epad	2470381	[o] 24703	18	
M 550 d xDrive	01/12→	280 / 381			98042400	L1083					98047300	L1110		
			Ate		82062900					PRO	92253903	ø 345 x 24 x 69		
			Ate		82517700						TPM0003			
				PRO	92253703	ø 348 x 36 x 66		left ⊕ USA						
				PRO	92253803	ø 348 x 36 x 66		right ⊕ USA						
					TPM0003									

6 (E63) 01/04→12/10

		kW / hp											
			93100										
630 i	09/04→	190 / 258	Ate		2331211	[o] 23312 20.3		Ate		2373201	[o] 23732 17.3	
			Ate	epad	2331282	[o] 23312 20.3		Ate	epad	2373281	[o] 23732 17.3	
					98030400	L670				98030500	L685	
			Ate		82062900			Ate		82062900		
			Ate		82072000			Ate		82072700		
				PRO	92122603	ø 324 x 30 x 77.2			PRO	92122703	ø 320 x 20 x 63	
				PRO	92122605	ø 324 x 30 x 77.2				TPM0003		
					TPM0003					91058700	ø 185 x 30	
										97032200		
			93200										
630 i	07/07→	200 / 272	Ate		2331211	[o] 23312 20.3		Ate		2373001	[o] 23730 17.3	
645 Ci	01/04→	245 / 333										
650 Ci	09/05→12/10	261 / 350	Ate	epad	2331282	[o] 23312 20.3		Ate	epad	2373081	[o] 23730 17.3	
					98030400	L670				98030500	L685	
			Ate		82062900			Ate		82057500		
			Ate		82072000			Ate		82062900		
				PRO	92141803	ø 348 x 30 x 77			PRO	92182503	ø 345 x 24 x 63	
					TPM0003					TPM0003		
										91058700	ø 185 x 30	
										97032200		
			93300										
635 d	07/07→	210 / 286	Ate		2379101	[o] 23791 20.8		Ate		2373001	[o] 23730 17.3	
			Ate	epad	2379181	[o] 23791 20.8		Ate	epad	2373081	[o] 23730 17.3	
					98030400	L670				98030500	L685	
			Ate		82062900			Ate		82057500		
			Ate		82504100			Ate		82062900		
				PRO	92182403	ø 348 x 36 x 77			PRO	92182503	ø 345 x 24 x 63	
					TPM0003					TPM0003		
										91058700	ø 185 x 30	
										97032200		
			93400										
645 Ci	01/04→12/05	242 / 329	Ate		2331211	[o] 23312 20.3		Ate		2373001	[o] 23730 17.3	
			Ate	epad	2331282	[o] 23312 20.3		Ate	epad	2373081	[o] 23730 17.3	
					98030400	L670				98030500	L685	
			Ate		82072000			Ate		82057500		
					TPM0003				PRO	92182503	ø 345 x 24 x 63	
										TPM0003		
										91058700	ø 185 x 30	
			93500										
650 i	07/05→	270 / 367	Ate		2331211	[o] 23312 20.3	⊕ USA	Ate		2373001	[o] 23730 17.3	
			Ate	epad	2331282	[o] 23312 20.3	⊕ USA	Ate	epad	2373081	[o] 23730 17.3	
			Ate		2379101	[o] 23791 20.8	⊖ USA			98030500	L685	
			Ate	epad	2379181	[o] 23791 20.8	⊖ USA	Ate		82057500		
					98030400	L670		Ate		82062900		
			Ate		82062900				PRO	92182503	ø 345 x 24 x 63	

BMW

BMW

		kW / hp								
6 (E63) 01/04→12/10										
650 i	07/05→	93500 270 / 367	Ate		82072000		⊕ USA		TPM0003	
			Ate		82504100		⊖ USA		91058700	ø 185 x 30
				PRO	92141803	ø 348 x 30 x 77	⊕ USA		97032200	
				PRO	92182403	ø 348 x 36 x 77	⊖ USA			
					TPM0003					
650 i	09/05→12/10	93600 261 / 355	Ate		2331211	[o] 23312 20.3		Ate	2373001	[o] 23730 17.3
			Ate	epad	2331282	[o] 23312 20.3		Ate	2373081	[o] 23730 17.3
					98030400	L670			98030500	L685
			Ate		82072000			Ate	82057500	
					TPM0003			PRO	92182503	ø 345 x 24 x 63
									TPM0003	
									91058700	ø 185 x 30
									97032200	
M	09/05→	93700 373 / 507	Ate		2379101	[o] 23791 20.8	→09/08	Ate	2373001	[o] 23730 17.3
			Ate	epad	2379181	[o] 23791 20.8	→09/08	Ate	2373081	[o] 23730 17.3
			Ate		2432801	[o] 24328 20.8			98030500	L685
					98041200	L689	right	Ate	82057500	
			Ate		82062900			Ate	82062900	
			Ate		82504100		→09/08		TPM0003	
					TPM0009				91058700	ø 185 x 30
									97032200	
6 Cabriolet (E64) 04/04→12/10 → 6 Convertible (E64), Page 186										
6 Cabriolet (F12) 03/11→12/12 → 6 Convertible (F12), Page 188										
6 Convertible (E64) 04/04→12/10										
630 i	09/04→	93800 190 / 258	Ate		2331211	[o] 23312 20.3		Ate	2373201	[o] 23732 17.3
			Ate	epad	2331282	[o] 23312 20.3		Ate	2373281	[o] 23732 17.3
					98030400	L670			98030500	L685
			Ate		82062900			Ate	82062900	
			Ate		82072000			Ate	82072700	
				PRO	92122603	ø 324 x 30 x 77.2		PRO	92122703	ø 320 x 20 x 63
				PRO	92122605	ø 324 x 30 x 77.2			TPM0003	
					TPM0003				91058700	ø 185 x 30
									97032200	
630 i	07/07→	93900 200 / 272	Ate		2331211	[o] 23312 20.3		Ate	2373001	[o] 23730 17.3
			Ate	epad	2331282	[o] 23312 20.3		Ate	2373081	[o] 23730 17.3
					98030400	L670			98030500	L685
			Ate		82062900			Ate	82057500	
			Ate		82072000			Ate	82062900	
				PRO	92141803	ø 348 x 30 x 77		PRO	92182503	ø 345 x 24 x 63
					TPM0003				TPM0003	
									91058700	ø 185 x 30

→

6 Convertible (E64) 04/04→12/10

		kW / hp											
630 i	07/07→	93900 200 / 272									97032200		
635 d	07/07→	94000 210 / 286	Ate		2379101	[o] 23791 20.8		Ate		2373001	[o] 23730 17.3	
			Ate	epad	2379181	[o] 23791 20.8		Ate	epad	2373081	[o] 23730 17.3	
					98030400	L670				98030500	L685	
			Ate		82062900			Ate		82057500		
			Ate		82504100			Ate		82062900		
				PRO	92182403	ø 348 x 36 x 77			PRO	92182503	ø 345 x 24 x 63	
					TPM0003					TPM0003		
										91058700	ø 185 x 30	
										97032200		
645 Ci	04/04→	94100 245 / 333	Ate		2331211	[o] 23312 20.3		Ate		2373001	[o] 23730 17.3	
			Ate	epad	2331282	[o] 23312 20.3		Ate	epad	2373081	[o] 23730 17.3	
					98030400	L670				98030500	L685	
			Ate		82062900			Ate		82057500		
			Ate		82072000			Ate		82062900		
					TPM0003				PRO	92182503	ø 345 x 24 x 63	
										TPM0003		
										91058700	ø 185 x 30	
										97032200		
645 Ci	04/04→12/05	94200 242 / 329	Ate		2331211	[o] 23312 20.3		Ate		2373001	[o] 23730 17.3	
650 i	09/05→12/10	261 / 355	Ate	epad	2331282	[o] 23312 20.3		Ate	epad	2373081	[o] 23730 17.3	
					98030400	L670				98030500	L685	
			Ate		82072000			Ate		82057500		
					TPM0003				PRO	92182503	ø 345 x 24 x 63	
										TPM0003		
										91058700	ø 185 x 30	
										97032200		
650 i	07/05→	94300 270 / 367	Ate		2331211	[o] 23312 20.3	⊕ USA	Ate		2373001	[o] 23730 17.3	
			Ate	epad	2331282	[o] 23312 20.3	⊕ USA	Ate	epad	2373081	[o] 23730 17.3	
			Ate		2379101	[o] 23791 20.8	⊖ USA			98030500	L685	
			Ate	epad	2379181	[o] 23791 20.8	⊖ USA	Ate		82057500		
					98030400	L670		Ate		82062900		
			Ate		82062900				PRO	92182503	ø 345 x 24 x 63	
			Ate		82072000		⊕ USA			TPM0003		
			Ate		82504100		⊖ USA			91058700	ø 185 x 30	
				PRO	92141803	ø 348 x 30 x 77	⊕ USA			97032200		
				PRO	92182403	ø 348 x 36 x 77	⊖ USA					
					TPM0003							
M	07/06→	94400 373 / 507	Ate		2379101	[o] 23791 20.8	→09/08	Ate		2373001	[o] 23730 17.3	
			Ate	epad	2379181	[o] 23791 20.8	→09/08	Ate	epad	2373081	[o] 23730 17.3	

BMW

BMW

		kW / hp										
6 Convertible (E64) 04/04→12/10												
94400			Ate		**2432801**	[o] 24328 20.8				**98030500**	L685	
M	07/06→	373 / 507			**98041200**	L689	right	Ate		**82057500**		
			Ate		**82062900**			Ate		**82062900**		
			Ate		**82504100**		→09/08			**TPM0003**		
					TPM0009					**91058700**	ø 185 x 30	
										97032200		
6 Convertible (F12) 03/11→12/12												
94500			Ate		**2504501**	[o] 25045 19.3		TRW		**2470301**	[o] 24703 18	
640 d	09/11→	230 / 313										
640 d xDrive	09/11→	230 / 313	Ate	epad	**2504581**	[o] 25045 19.3		TRW	epad	**2470381**	[o] 24703 18	
640 i	03/11→	235 / 320			**98042400**	L1083				**98043300**	L915	
			Ate		**82062900**				PRO	**92253903**	ø 345 x 24 x 69	
			Ate		**82517700**					**TPM0003**		
				PRO	**92253703**	ø 348 x 36 x 66	left					
				PRO	**92253803**	ø 348 x 36 x 66	right					
					TPM0003							
94600			Ate		**2468801**	[o] 24688 19.2		TRW		**2470301**	[o] 24703 18	
640 i	09/11→	224 / 305	Ate	epad	**2468881**	[o] 24688 19.2		TRW	epad	**2470381**	[o] 24703 18	
					98042400	L1083				**98043300**	L915	
			Ate		**82517700**		⊖ sport pack.		PRO	**92253903**	ø 345 x 24 x 69	
					TPM0003					**TPM0003**		
94700			Ate		**2468801**	[o] 24688 19.2	⊖ M-technology	TRW		**2470301**	[o] 24703 18	⊖ M-technology
640 i xDrive	01/13→	235 / 320	Ate	epad	**2468881**	[o] 24688 19.2	⊖ M-technology	TRW	epad	**2470381**	[o] 24703 18	⊖ M-technology
			Ate		**2504501**	[o] 25045 19.3	⊕ M-technology			**98043300**	L915	
			Ate	epad	**2504581**	[o] 25045 19.3	⊕ M-technology		PRO	**92253903**	ø 345 x 24 x 69	
					98042400	L1083	left			**TPM0003**		
			Ate		**82062900**							
			Ate		**82517700**							
				PRO	**92253703**	ø 348 x 36 x 66	left ⊖ high speed br. sys.					
				PRO	**92253803**	ø 348 x 36 x 66	right ⊖ high speed br. sys.					
					TPM0003							
94800			Ate		**2504501**	[o] 25045 19.3		TRW		**2470301**	[o] 24703 18	
650 i	03/11→	300 / 408										
650 i	10/11→	330 / 449	Ate	epad	**2504581**	[o] 25045 19.3		TRW	epad	**2470381**	[o] 24703 18	
650 i xDrive	06/11→	300 / 407			**98042400**	L1083				**98043300**	L915	
650 i xDrive	11/11→	330 / 449	Ate		**82062900**				PRO	**92253903**	ø 345 x 24 x 69	
			Ate		**82517700**					**TPM0003**		
					TPM0003							
94900			Ate		**2504501**	[o] 25045 19.3		TRW		**2470301**	[o] 24703 18	
650 i	09/11→12/12	298 / 405	Ate	epad	**2504581**	[o] 25045 19.3		TRW	epad	**2470381**	[o] 24703 18	
					98042400	L1083	left			**98043300**	L915	
			Ate		**82517700**				PRO	**92253903**	ø 345 x 24 x 69	

→

		kW / hp											
6 Convertible (F12) 03/11→12/12													
650 i	09/11→12/12	94900 298 / 405		PRO	92253703	ø 348 x 36 x 66	left ⊕ USA			TPM0003			
				PRO	92253803	ø 348 x 36 x 66	right ⊕ USA						
					TPM0003								
650 i 650 i xDrive	07/13→ 07/13→	95000 332 / 452 332 / 452	Ate		2504501	[o] 25045 19.3		TRW		2470301	[o] 24703 18		
			Ate	epad	2504581	[o] 25045 19.3		TRW	epad	2470381	[o] 24703 18		
					98042400	L1083				98043300	L915		
			Ate		82517700				PRO	92253903	ø 345 x 24 x 69		
				PRO	92253703	ø 348 x 36 x 66	left			TPM0003			
				PRO	92253803	ø 348 x 36 x 66	right						
					TPM0003								
650 i xDrive	09/11→	95100 298 / 405	Ate		2504501	[o] 25045 19.3		TRW		2470301	[o] 24703 18		
			Ate	epad	2504581	[o] 25045 19.3		TRW	epad	2470381	[o] 24703 18		
					98042400	L1083	left			98043300	L915		
			Ate		82517700				PRO	92253903	ø 345 x 24 x 69		
				PRO	92253703	ø 348 x 36 x 66	left			TPM0003			
				PRO	92253803	ø 348 x 36 x 66	right						
					TPM0003								
M6	01/12→	95200 412 / 560	Bre		2513301	[o] 25133 20.4		TRW		2470301	[o] 24703 18		
					98042400	L1083		TRW	epad	2470381	[o] 24703 18		
					TPM0009					98047700	L1000		
										TPM0003			
M6	02/14→	95300 423 / 575	Bre		2513301	[o] 25133 20.4	⊖ ceramic brake	TRW		2470301	[o] 24703 18		
					98042400	L1083	left	TRW	epad	2470381	[o] 24703 18		
					TPM0003		⊖ ceramic brake			98047700	L1000		
					TPM0009		⊕ ceramic brake			TPM0003			
6 Coupe (F13) 11/10→12/12													
640 d 640 i 650 i xDrive	11/10→ 11/10→ 06/11→	95400 230 / 313 235 / 320 300 / 408	Ate		2504501	[o] 25045 19.3		TRW		2470301	[o] 24703 18		
			Ate	epad	2504581	[o] 25045 19.3		TRW	epad	2470381	[o] 24703 18		
					98042400	L1083				98043300	L915		
			Ate		82062900				PRO	92253903	ø 345 x 24 x 69		
				PRO	92253703	ø 348 x 36 x 66	left			TPM0003			
				PRO	92253803	ø 348 x 36 x 66	right						
					TPM0003								
640 d xDrive	09/11→	95500 230 / 313	Ate		2504501	[o] 25045 19.3		TRW		2470301	[o] 24703 18		
			Ate	epad	2504581	[o] 25045 19.3		TRW	epad	2470381	[o] 24703 18		
					98042400	L1083				98043300	L915		
			Ate		82062900				PRO	92253903	ø 345 x 24 x 69		
			Ate		82517700					TPM0003			
				PRO	92253703	ø 348 x 36 x 66	left						
				PRO	92253803	ø 348 x 36 x 66	right						

BMW

BMW

		kW / hp											
6 Coupe (F13) 11/10→12/12													
640 d xDrive	09/11→	95500 230 / 313		TPM0003									
640 i	09/11→	95600 224 / 305	Ate	2468801	[o] 24688 19.2		TRW	2470301	[o] 24703 18				
			Ate epad	2468881	[o] 24688 19.2		TRW epad	2470381	[o] 24703 18				
				98042400	L1083			98043300	L915				
			Ate	82517700		⊖ sport pack.		PRO 92253903	ø 345 x 24 x 69				
				TPM0003				TPM0003					
640 i xDrive	01/13→	95700 235 / 320	Ate	2468801	[o] 24688 19.2	⊖ M-technology	TRW	2470301	[o] 24703 18	⊖ M-technology			
			Ate epad	2468881	[o] 24688 19.2	⊖ M-technology	TRW epad	2470381	[o] 24703 18	⊖ M-technology			
			Ate	2504501	[o] 25045 19.3	⊕ M-technology		98043300	L915				
			Ate epad	2504581	[o] 25045 19.3	⊕ M-technology		PRO 92253903	ø 345 x 24 x 69				
				98042400	L1083	left		TPM0003					
			Ate	82062900									
			Ate	82517700									
			PRO	92253703	ø 348 x 36 x 66	left ⊖ high speed br. sys.							
			PRO	92253803	ø 348 x 36 x 66	right ⊖ high speed br. sys.							
				TPM0003									
650 i	11/10→	95800 300 / 407	Ate	2504501	[o] 25045 19.3		TRW	2470301	[o] 24703 18				
650 i	10/11→	330 / 449											
650 i xDrive	11/11→	330 / 449	Ate epad	2504581	[o] 25045 19.3		TRW epad	2470381	[o] 24703 18				
				98042400	L1083			98043300	L915				
			Ate	82062900				PRO 92253903	ø 345 x 24 x 69				
				TPM0003				TPM0003					
650 i	09/11→12/12	95900 298 / 405	Ate	2504501	[o] 25045 19.3		TRW	2470301	[o] 24703 18				
			Ate epad	2504581	[o] 25045 19.3		TRW epad	2470381	[o] 24703 18				
				98042400	L1083	left		98043300	L915				
			Ate	82517700				PRO 92253903	ø 345 x 24 x 69				
			PRO	92253703	ø 348 x 36 x 66	left ⊕ USA		TPM0003					
			PRO	92253803	ø 348 x 36 x 66	right ⊕ USA							
				TPM0003									
650 i	07/13→	96000 332 / 452	Ate	2504501	[o] 25045 19.3		TRW	2470301	[o] 24703 18				
650 i xDrive	07/13→	332 / 452	Ate epad	2504581	[o] 25045 19.3		TRW epad	2470381	[o] 24703 18				
				98042400	L1083			98043300	L915				
			Ate	82517700				PRO 92253903	ø 345 x 24 x 69				
			PRO	92253703	ø 348 x 36 x 66	left		TPM0003					
			PRO	92253803	ø 348 x 36 x 66	right							
				TPM0003									
650 i xDrive	09/11→	96100 298 / 405	Ate	2504501	[o] 25045 19.3		TRW	2470301	[o] 24703 18				
			Ate epad	2504581	[o] 25045 19.3		TRW epad	2470381	[o] 24703 18				
				98042400	L1083	left		98043300	L915				
			Ate	82517700				PRO 92253903	ø 345 x 24 x 69				
			PRO	92253703	ø 348 x 36 x 66	left		TPM0003					

→

6 Coupe (F13) 11/10→12/12

650 i xDrive	09/11→	96100 298 / 405		PRO	92253803	ø 348 x 36 x 66	right				
					TPM0003						
M6	01/12→	96200 412 / 560	Bre		2513301	[o] 25133 20.4		TRW		2470301	[o] 24703 18
					98042400	L1083		TRW	epad	2470381	[o] 24703 18
					TPM0009					98047700	L1000
										TPM0003	
M6	02/14→	96300 423 / 575	Bre		2513301	[o] 25133 20.4	⊖ ceramic brake	TRW		2470301	[o] 24703 18
					98042400	L1083	left	TRW	epad	2470381	[o] 24703 18
					TPM0003		⊖ ceramic brake			98047700	L1000
					TPM0009		⊕ ceramic brake			TPM0003	

6 Gran Coupe (F06) 09/11→

640 d	09/11→	96400 230 / 313	Ate		2468801	[o] 24688 19.2	⊕ USA	TRW		2470301	[o] 24703 18
			Ate	epad	2468881	[o] 24688 19.2	⊕ USA	TRW	epad	2470381	[o] 24703 18
			Ate		2504501	[o] 25045 19.3	⊖ USA			98043300	L915
			Ate	epad	2504581	[o] 25045 19.3	⊖ USA		PRO	92253903	ø 345 x 24 x 69
					98042400	L1083				TPM0003	
			Ate		82062900						
			Ate		82517700						
				PRO	92253703	ø 348 x 36 x 66	left ⊖ USA				
				PRO	92253803	ø 348 x 36 x 66	right ⊖ USA				
					TPM0003						
640 d xDrive 640 i xDrive	01/13→ 01/13→	96500 230 / 313 235 / 320	Ate		2504501	[o] 25045 19.3		TRW		2470301	[o] 24703 18
			Ate	epad	2504581	[o] 25045 19.3		TRW	epad	2470381	[o] 24703 18
					98042400	L1083	left			98043300	L915
			Ate		82062900				PRO	92253903	ø 345 x 24 x 69
			Ate		82517700					TPM0003	
				PRO	92253703	ø 348 x 36 x 66	left				
				PRO	92253803	ø 348 x 36 x 66	right				
					TPM0003						
640 i	09/11→	96600 235 / 320	Ate		2504501	[o] 25045 19.3		TRW		2470301	[o] 24703 18
			Ate	epad	2504581	[o] 25045 19.3		TRW	epad	2470381	[o] 24703 18
					98042400	L1083				98043300	L915
			Ate		82062900				PRO	92253903	ø 345 x 24 x 69
			Ate		82517700					TPM0003	
				PRO	92253703	ø 348 x 36 x 66	left				
				PRO	92253803	ø 348 x 36 x 66	right				
					TPM0003						
640 i	01/12→	96700 224 / 305	Ate		2468801	[o] 24688 19.2		TRW		2470301	[o] 24703 18
			Ate	epad	2468881	[o] 24688 19.2		TRW	epad	2470381	[o] 24703 18
					98042400	L1083				98043300	L915

BMW

BMW

		kW / hp											
6 Gran Coupe (F06) 09/11→													
		96700	Ate		**82517700**		⊖ sport pack.		PRO	**92253903**	ø 345 x 24 x 69	
640 i	01/12→	224 / 305			**TPM0003**					**TPM0003**		
		96800	Ate		**2504501**	[o] 25045 19.3		TRW		**2470301**	[o] 24703 18	
650 i	11/11→	330 / 449	Ate	epad	**2504581**	[o] 25045 19.3		TRW	epad	**2470381**	[o] 24703 18	
650 i xDrive	11/11→	330 / 449			**98042400**	L1083				**98043300**	L915	
			Ate		**82062900**				PRO	**92253903**	ø 345 x 24 x 69	
			Ate		**82517700**					**TPM0003**		
					TPM0003							
		96900	Ate		**2504501**	[o] 25045 19.3		TRW		**2470301**	[o] 24703 18	
650 i	07/13→	332 / 452	Ate	epad	**2504581**	[o] 25045 19.3		TRW	epad	**2470381**	[o] 24703 18	
650 i	09/13→	332 / 452			**98042400**	L1083				**98043300**	L915	
			Ate		**82517700**				PRO	**92253903**	ø 345 x 24 x 69	
				PRO	**92253703**	ø 348 x 36 x 66	left			**TPM0003**		
				PRO	**92253803**	ø 348 x 36 x 66	right					
					TPM0003							
		97000	Ate		**2504501**	[o] 25045 19.3		TRW		**2470301**	[o] 24703 18	
650 i xDrive	09/12→	335 / 456	Ate	epad	**2504581**	[o] 25045 19.3		TRW	epad	**2470381**	[o] 24703 18	
					98042400	L1083	left			**98043300**	L915	
			Ate		**82517700**				PRO	**92253903**	ø 345 x 24 x 69	
					TPM0003					**TPM0003**		
		97100	Bre		**2513301**	[o] 25133 20.4	⊖ ceramic brake	TRW		**2470301**	[o] 24703 18	⊖ ceramic brake
M6	12/12→	412 / 560			**98042400**	L1083	left	TRW	epad	**2470381**	[o] 24703 18	⊖ ceramic brake
					TPM0009					**98047700**	L1000	
										TPM0003		
		97200	Bre		**2513301**	[o] 25133 20.4	⊖ ceramic brake	TRW		**2470301**	[o] 24703 18	
M6	11/13→	410 / 560			**98042400**	L1083		TRW	epad	**2470381**	[o] 24703 18	
M6	02/14→	423 / 575			**TPM0009**					**98047700**	L1000	
										TPM0003		
7 (E38) 10/94→11/01													
		97300	Bre		**2147102**	[o] 21471 18		Ate		**2148701**	[o] 21487 17.2	
725 tds	04/96→11/01	105 / 143			**98019800**	L570		Ate	epad	**2148781**	[o] 21487 17.2	
			Bre		**82071700**					**98019900**	L620	
			Ate		**82062900**			Ate		**82057500**		
				PRO	**92071403**	ø 316 x 28 x 77.1		Ate		**82062900**		
					TPM0003					**92058400**	ø 324 x 12 x 61.1	
										TPM0003		
										91033400	ø 180 x 25	
										97003100		
		97400	Bre		**2147102**	[o] 21471 18		Ate		**2148701**	[o] 21487 17.2	
728 i,iL	08/95→11/01	142 / 193										
728i X	11/95→09/01	142 / 193			**98019800**	L570		Ate	epad	**2148781**	[o] 21487 17.2	
730 d	08/98→04/00	135 / 184										
730 d	04/00→11/01	142 / 193										
730 i,iL	10/94→11/01	155 / 211										

7 (E38) 10/94→11/01

730 i,iL	10/94→11/01	160 / 218	Bre		82071700				98019900	L620	
735 i,iL	01/96→11/01	173 / 235		PRO	92071403	ø 316 x 28 x 77.1		Ate	82057500		
					TPM0003			Ate	82062900		
									92058400	ø 324 x 12 x 61.1	
									TPM0003		
									91033400	ø 180 x 25	
									97003100		
		97500	Ate		2148401	[o] 21484 20.8		Ate	2148701	[o] 21487 17.2	
740 d	05/99→11/01	180 / 245			98027200	L585		Ate	2148781	[o] 21487 17.2	
			Ate		82059200				98019900	L620	
			Ate		82062900			Ate	82057500		
					92072200	ø 334 x 32 x 77		Ate	82062900		
					TPM0003				92074900	ø 328 x 20 x 61	
									TPM0003		
									91033400	ø 180 x 25	
									97003100		
		97600	Ate		2148602	[o] 21486 19.3		Ate	2148701	[o] 21487 17.2	
740 i,iL	10/94→11/01	210 / 286	Ate		2148681	[o] 21486 19.3		Ate	2148781	[o] 21487 17.2	
740 i,iL	01/96→11/01	210 / 286			98019800	L570			98019900	L620	
			Ate		82059100			Ate	82057500		
			Ate		82062900			Ate	82062900		
					92058300	ø 324 x 30 x 77.1			92058400	ø 324 x 12 x 61.1	
					TPM0003				TPM0003		
									91033400	ø 180 x 25	
									97003100		
		97700	Ate		2148401	[o] 21484 20.8		Ate	2148701	[o] 21487 17.2	
750 i,iL	12/94→11/01	240 / 326			98020500	L580	→08/98	Ate	2148781	[o] 21487 17.2	
					98027200	L585	09/98→		98019900	L620	
			Ate		82059200			Ate	82057500		
			Ate		82062900			Ate	82062900		
					92072200	ø 334 x 32 x 77			92074900	ø 328 x 20 x 61	
					TPM0003				TPM0003		
									91033400	ø 180 x 25	
									97003100		

7 (E65, E66, E67) 11/01→12/08

		97800	Ate		2331211	[o] 23312 20.3		Ate	2344702	[o] 23447 17.3	
730 d	10/02→	155 / 211	Ate		2331282	[o] 23312 20.3			98029300	L845	
					98029200	L830		Ate	82057500		
			Ate		82062900			Ate	82062900		
			Ate		82072000				92123103	ø 324 x 20 x 67	→03/05

BMW

BMW

7 (E65, E66, E67) 11/01→12/08

730 d	10/02→	97800 155 / 211			92122900	ø 348 x 30 x 81	03/05→			TPM0003				
				PRO	92122803	ø 324 x 30 x 81	→03/05			91058700	ø 185 x 30			
				PRO	92122903	ø 348 x 30 x 81	03/05→			97032200				
				PRO	92122905	ø 348 x 30 x 81	03/05→							
					TPM0003									
730 d	10/02→	97900 160 / 218	Ate		2331211	[o] 23312 20.3		Ate		2344702	[o] 23447 17.3			
			Ate	epad	2331282	[o] 23312 20.3				98029300	L845			
					98029200	L830		Ate		82057500				
			Ate		82062900			Ate		82062900				
			Ate		82072000				PRO	92123103	ø 324 x 20 x 67	→02/05		
					92122900	ø 348 x 30 x 81	03/05→			TPM0003				
				PRO	92122803	ø 324 x 30 x 81	→02/05			91058700	ø 185 x 30			
				PRO	92122903	ø 348 x 30 x 81	03/05→			97032200				
				PRO	92122905	ø 348 x 30 x 81	03/05→							
					TPM0003									
730 i,Li 735 i,Li	03/03→ 11/01→	98000 170 / 231 200 / 272	Ate		2331211	[o] 23312 20.3		Ate		2344702	[o] 23447 17.3			
			Ate	epad	2331282	[o] 23312 20.3				98029300	L845			
					98029200	L830		Ate		82057500				
			Ate		82062900			Ate		82062900				
			Ate		82072000				PRO	92123103	ø 324 x 20 x 67			
				PRO	92122803	ø 324 x 30 x 81	→02/05			TPM0003				
					TPM0003					91058700	ø 185 x 30			
										97032200				
730 i,Li 730 i, Li	03/05→ 03/05→	98100 190 / 258 184 / 250	Ate		2331211	[o] 23312 20.3		Ate		2344702	[o] 23447 17.3			
			Ate	epad	2331282	[o] 23312 20.3				98029300	L845			
					98029200	L830		Ate		82057500				
			Ate		82062900			Ate		82062900				
			Ate		82072000					TPM0003				
				PRO	92122803	ø 324 x 30 x 81				91058700	ø 185 x 30			
					TPM0003					97032200				
730 Ld 740 i,Li	07/05→ 07/05→	98200 170 / 231 225 / 306	Ate		2331211	[o] 23312 20.3		Ate		2373001	[o] 23730 17.3			
			Ate	epad	2331282	[o] 23312 20.3		Ate	epad	2373081	[o] 23730 17.3			
					98029200	L830				98029300	L845			
			Ate		82062900			Ate		82057500				
			Ate		82072000			Ate		82062900				
					92122900	ø 348 x 30 x 81				TPM0003				
				PRO	92122903	ø 348 x 30 x 81				91058700	ø 185 x 30			
				PRO	92122905	ø 348 x 30 x 81				97032200				
					TPM0003									
735 i	03/05→	98300 225 / 306	Ate		2331211	[o] 23312 20.3		Ate		2344702	[o] 23447 17.3			

→

7 (E65, E66, E67) 11/01→12/08

		kW / hp										
98300			Ate		2331282	[o] 23312 20.3				98029300	L845	
735 i	03/05→	225 / 306			98029200	L830		Ate		82057500		
			Ate		82062900			Ate		82062900		
			Ate		82072000				PRO	92123103	ø 324 x 20 x 67	
				PRO	92122803	ø 324 x 30 x 81				TPM0003		
					TPM0003					91058700	ø 185 x 30	
										97032200		
98400			Ate		2331211	[o] 23312 20.3		Ate		2373001	[o] 23730 17.3	
740 d	10/02→	190 / 258	Ate		2331282	[o] 23312 20.3		Ate		2373081	[o] 23730 17.3	
745 i,Li	11/01→	245 / 333			98029200	L830				98029300	L845	
			Ate		82062900			Ate		82057500		
			Ate		82072000			Ate		82062900		
					92122900	ø 348 x 30 x 81			PRO	92123203	ø 345 x 24 x 67	
				PRO	92122903	ø 348 x 30 x 81				TPM0003		
				PRO	92122905	ø 348 x 30 x 81				91058700	ø 185 x 30	
					TPM0003					97032200		
98500			Ate		2379101	[o] 23791 20.8		Ate		2373001	[o] 23730 17.3	
745 d	03/05→08/05	220 / 300	Ate		2379181	[o] 23791 20.8		Ate		2373081	[o] 23730 17.3	
					98029200	L830				98029300	L845	
			Ate		82062900			Ate		82057500		
				PRO	92123003	ø 374 x 36 x 81		Ate		82062900		
					TPM0003				PRO	92155203	ø 370 x 24 x 74	
										TPM0003		
										91058700	ø 185 x 30	
										97032200		
98600			Ate		2379101	[o] 23791 20.8		Ate		2373001	[o] 23730 17.3	
745 d	07/05→	242 / 329	Ate		2379181	[o] 23791 20.8		Ate		2373081	[o] 23730 17.3	
					98029200	L830				98029300	L845	
			Ate		82062900			Ate		82057500		
			Ate		82504100			Ate		82062900		
				PRO	92123003	ø 374 x 36 x 81			PRO	92155203	ø 370 x 24 x 74	
					TPM0003					TPM0003		
										91058700	ø 185 x 30	
										97032200		
98700			Ate		2331211	[o] 23312 20.3		Ate		2373001	[o] 23730 17.3	
745 i	11/01→12/03	241 / 328	Ate		2331282	[o] 23312 20.3		Ate		2373081	[o] 23730 17.3	
745 i	09/03→12/05	242 / 329			98029200	L830				98029300	L845	
			Ate		82072000			Ate		82057500		
					92122900	ø 348 x 30 x 81			PRO	92123203	ø 345 x 24 x 67	
				PRO	92122903	ø 348 x 30 x 81				TPM0003		

BMW

BMW

30 kW / hp

7 (E65, E66, E67) 11/01→12/08

98700														
745 i	11/01→12/03	241 / 328		PRO	92122905	ø 348 x 30 x 81				V	91058700	ø 185 x 30	
745 i	09/03→12/05	242 / 329			TPM0003					V	97032200		
98800			Ate		2331211	[o] 23312 20.3		Ate		2373001	[o] 23730 17.3		
750 i	09/05→12/08	264 / 359	Ate	epad	2331282	[o] 23312 20.3		Ate	epad	2373081	[o] 23730 17.3		
					98029200	L830				98029300	L845		
			Ate		82072000			Ate		82057500			
					92122900	ø 348 x 30 x 81				TPM0003			
				PRO	92122903	ø 348 x 30 x 81				V	91058700	ø 185 x 30	
				PRO	92122905	ø 348 x 30 x 81				V	97032200		
					TPM0003								
98900			Ate		2379101	[o] 23791 20.8		Ate		2373001	[o] 23730 17.3		
750 i,Li	07/05→	270 / 367	Ate	epad	2379181	[o] 23791 20.8		Ate	epad	2373081	[o] 23730 17.3		
					98029200	L830				98029300	L845		
			Ate		82062900			Ate		82057500			
			Ate		82504100			Ate		82062900			
					TPM0003					TPM0003			
										V	91058700	ø 185 x 30	
										V	97032200		
99000			Ate		2379101	[o] 23791 20.8		Ate		2373001	[o] 23730 17.3		
760	02/03→08/05	320 / 435	Ate	epad	2379181	[o] 23791 20.8		Ate	epad	2373081	[o] 23730 17.3		
760 i,Li	01/03→	327 / 445			98029200	L830				98029300	L845		
			Ate		82062900			Ate		82057500			
			Ate		82504100			Ate		82062900			
					92122900	ø 348 x 30 x 81	⊕ USA		PRO	92123203	ø 345 x 24 x 67	⊕ USA →03/05	
				PRO	92122903	ø 348 x 30 x 81	⊕ USA		PRO	92123303	ø 370 x 24 x 67	⊖ USA →03/05	
				PRO	92122905	ø 348 x 30 x 81	⊕ USA		PRO	92155203	ø 370 x 24 x 74	03/05→ ⊖ USA	
				PRO	92123003	ø 374 x 36 x 81	⊖ USA			TPM0003			
					TPM0003					V	91058700	ø 185 x 30	
										V	97032200		
99100			Ate		2331211	[o] 23312 20.3	⊕ USA	Ate		2373001	[o] 23730 17.3		
760 i	09/05→12/06	326 / 443	Ate	epad	2331282	[o] 23312 20.3	⊕ USA	Ate	epad	2373081	[o] 23730 17.3		
			Ate		2379101	[o] 23791 20.8	⊖ USA			98029300	L845		
			Ate	epad	2379181	[o] 23791 20.8	⊖ USA	Ate		82057500			
					98029200	L830			PRO	92155203	ø 370 x 24 x 74	⊕ USA	
			Ate		82072000		⊕ USA			TPM0003			
			Ate		82504100		⊖ USA			91058700	ø 185 x 30		
				PRO	92122903	ø 348 x 30 x 81	⊕ USA		V	97032200			
				PRO	92123003	ø 374 x 36 x 81	⊖ USA						
					TPM0003								

7 (F01, F02, F03, F04) 06/08→12/12

		kW / hp											
99200			Ate		2504501	[o] 25045 19.3		Ate		2373101	[o] 23731 16.9	
730 d	10/08→	180 / 245	Ate	epad	2504581	[o] 25045 19.3				98042500	L1066	09/09→
730 i	06/08→	190 / 258			98042400	L1083	09/09→			98043100	L1055	→09/09
					98043000	L1055	→09/09	Ate		82057500		
			Ate		82062900			Ate		82062900		
			Ate		82517700				PRO	92253903	ø 345 x 24 x 69	
				PRO	92253703	ø 348 x 36 x 66	left			TPM0003		
				PRO	92253803	ø 348 x 36 x 66	right			91058700	ø 185 x 30	
					TPM0003					97032200		
99300			Ate		2504501	[o] 25045 19.3		Ate		2373101	[o] 23731 16.9	
730 d	07/09→	155 / 211	Ate	epad	2504581	[o] 25045 19.3				98042500	L1066	
					98042400	L1083	2009-09→	Ate		82057500		
					98043000	L1055	→2009-09		PRO	92253903	ø 345 x 24 x 69	
			Ate		82517700					TPM0003		
				PRO	92253703	ø 348 x 36 x 66	left					
				PRO	92253803	ø 348 x 36 x 66	right					
					TPM0003							
99400			Ate		2504501	[o] 25045 19.3		Ate		2373101	[o] 23731 16.9	
730 d	07/12→	190 / 258										
730 d xDrive	07/12→	190 / 258	Ate	epad	2504581	[o] 25045 19.3				98042500	L1066	
740 d	09/09→	225 / 306										
740 d	07/12→	230 / 313			98042400	L1083		Ate		82057500		
740 d xDrive	09/09→	225 / 306										
740 d xDrive	07/12→	230 / 313	Ate		82062900			Ate		82062900		
740 i	07/12→	235 / 320										
			Ate		82517700				PRO	92253903	ø 345 x 24 x 69	
				PRO	92253703	ø 348 x 36 x 66	left			TPM0003		
				PRO	92253803	ø 348 x 36 x 66	right			91058700	ø 185 x 30	
					TPM0003					97032200		
99500			Ate		2504501	[o] 25045 19.3		Ate		2373101	[o] 23731 16.9	
740 i	10/08→	240 / 326	Ate	epad	2504581	[o] 25045 19.3				98042500	L1066	09/09→
					98042400	L1083	09/09→			98043100	L1055	→09/09
					98043000	L1055	→09/09	Ate		82057500		
			Ate		82062900			Ate		82062900		
			Ate		82517700				PRO	92253903	ø 345 x 24 x 69	
				PRO	92253703	ø 348 x 36 x 66	left 09/09→			TPM0003		
				PRO	92253803	ø 348 x 36 x 66	right 09/09→			91058700	ø 185 x 30	
					TPM0003					97032200		
99600			Ate		2504501	[o] 25045 19.3				98042500	L1066	
740 i	09/11→	224 / 305	Ate	epad	2504581	[o] 25045 19.3		Ate		82057500		
740 i, Li	09/10→	224 / 305			98042400	L1083			PRO	92253903	ø 345 x 24 x 69	
			Ate		82517700					TPM0003		
				PRO	92253703	ø 348 x 36 x 66	left			91058700	ø 185 x 30	
				PRO	92253803	ø 348 x 36 x 66	right			97032200		

BMW

BMW

30 kW / hp

7 (F01, F02, F03, F04) 06/08→12/12

740 i	09/11→	224 / 305	99600			TPM0003								
740 i, Li	09/10→	224 / 305												
750 d xDrive	07/12→	280 / 381	99700	Ate		2443601	[o] 24436	19.9	⊕ high speed br. sys.	Ate		2373101	[o] 23731	16.9	
750 i	10/12→	330 / 449		Ate		2504501	[o] 25045	19.3	⊖ high speed br. sys.			98042500	L1066	
750 i xDrive	09/09→	300 / 408		Ate	epad	2504581	[o] 25045	19.3	⊖ high speed br. sys.	Ate		82057500		
750 i xDrive	10/12→	330 / 449				98042400	L1083		left	Ate		82062900		
ActiveHybrid	10/10→	330 / 449		Ate		82062900						TPM0003		
ActiveHybrid	10/10→	342 / 465		Ate		82517700						91058700	ø 185 x 30	
ActiveHybrid	07/12→	235 / 320				TPM0003						97032200		
ActiveHybrid	07/12→	260 / 354												
750 i	10/08→	300 / 408	99800	Ate		2443601	[o] 24436	19.9	⊕ high speed br. sys.	Ate		2373101	[o] 23731	16.9	
				Ate		2504501	[o] 25045	19.3	⊖ high speed br. sys.			98042500	L1066	09/09→
				Ate	epad	2504581	[o] 25045	19.3	⊖ high speed br. sys.			98043100	L1055	→09/09
						98042400	L1083		09/09→	Ate		82057500		
						98043000	L1055		→09/09	Ate		82062900		
				Ate		82062900						TPM0003		
				Ate		82517700						91058700	ø 185 x 30	
						TPM0003						97032200		
750 i	09/12→	331 / 450	99900	Ate		2504501	[o] 25045	19.3				98042500	L1066	
750 Li	09/11→	298 / 405		Ate	epad	2504581	[o] 25045	19.3		Ate		82057500		
						98042400	L1083					TPM0003		
				Ate		82517700						91058700	ø 185 x 30	
						TPM0003						97032200		
750 i xDrive	09/12→	331 / 450	100000	Ate		2443601	[o] 24436	19.9	⊕ high speed br. sys.	Ate		2373101	[o] 23731	16.9	
				Ate		2504501	[o] 25045	19.3	⊖ high speed br. sys.			98042500	L1066	
				Ate	epad	2504581	[o] 25045	19.3	⊖ high speed br. sys.	Ate		82057500		
						98042400	L1083					TPM0003		
				Ate		82517700			⊖ high speed br. sys.			91058700	ø 185 x 30	
						TPM0003						97032200		
750 Li xDrive	09/08→	298 / 400	100100	Ate		2443601	[o] 24436	19.9	⊕ high speed br. sys.	Ate		2373101	[o] 23731	16.9	
				Ate		2504501	[o] 25045	19.3	⊖ high speed br. sys.			98042500	L1066	→2009-09
				Ate	epad	2504581	[o] 25045	19.3	⊖ high speed br. sys.	Ate		82057500		
						98042400	L1083		left			TPM0003		
				Ate		82517700			⊖ high speed br. sys.			91058700	ø 185 x 30	
						TPM0003						97032200		
760 i	09/09→	400 / 544	100200	Ate		2443601	[o] 24436	19.9		Ate		2373101	[o] 23731	16.9	
						98042400	L1083					98042500	L1066	
				Ate		82062900				Ate		82057500		
				Ate		82517700				Ate		82062900		
						TPM0003						TPM0003		
												91058700	ø 185 x 30	
												97032200		

→

30 kW / hp									
7 (F01, F02, F03, F04) 06/08→12/12									
760 i, Li 09/08→12/11 100300 326 / 443	Ate	2443601	[o] 24436 19.9		Ate	2373101	[o] 23731 16.9	
		98042400	L1083	left		98042500	L1066	
		TPM0003			Ate	82057500		
						TPM0003		
760 Li 09/08→ 100400 326 / 443	Ate	2443601	[o] 24436 19.9		Ate	2373101	[o] 23731 16.9	
		98042400	L1083	09/09→		98042500	L1066	09/09→
		TPM0003			Ate	82057500		
						TPM0003		
						91058700	ø 185 x 30	
						97032200		
ActiveHybrid 10/10→12/12 100500 339 / 461	Ate	2443601	[o] 24436 19.9	608 ⊕ high speed br. sys.	Ate	2373101	[o] 23731 16.9	
	Ate	2504501	[o] 25045 19.3	⊖ high speed br. sys.		98042500	L1066	
	Ate	2504581	[o] 25045 19.3	⊖ high speed br. sys.	Ate	82057500		
		98042400	L1083	left		TPM0003		
	Ate	82517700		⊖ high speed br. sys.		91058700	ø 185 x 30	
		TPM0003				97032200		

7 Saloon (E38) 10/94→11/01 → 7 (E38), Page 192

7 Saloon (E65, E66, E67) 11/01→12/08 → 7 (E65, E66, E67), Page 193

7 Saloon (F01, F02, F03, F04) 06/08→12/12 → 7 (F01, F02, F03, F04), Page 197

7 Stufenheck (E38) 10/94→11/01 → 7 (E38), Page 192

7 Stufenheck (E65, E66, E67) 11/01→12/08 → 7 (E65, E66, E67), Page 193

7 Stufenheck (F01, F02, F03, F04) 06/08→12/12 → 7 (F01, F02, F03, F04), Page 197

8 (E31) 09/94→12/99								
840 Ci 01/96→12/99 100600 210 / 286 850 Ci 09/94→12/99 240 / 326	Bre	2147102	[o] 21471 18		Ate	2128201	[o] 21282 17.3	
		98019400	L370			98019300	L260	
	Bre	82071700			Ate	82057500		
		92083400	ø 324 x 30 x 77.1		Ate	82062900		
						92058400	ø 324 x 12 x 61.1	
						91033400	ø 180 x 25	
						97003100		
X1 (E84) 03/09→12/11								
sDrive 16 d 04/12→ 100700 85 / 116	Ate	2331301	[o] 23313 20.3		Ate	2392701	[o] 23927 17.3	
	Ate	2331381	[o] 23313 20.3		Ate	2392781	[o] 23927 17.3	
		98044000	L675			98044100	L1143	
	Ate	82062900			Ate	82028700		
	Ate	82074500			Ate	82062900		
		92176103	ø 312 x 24 x 73.5			92154903	ø 300 x 20 x 66	
		TPM0003				TPM0003		
sDrive 16 i 03/13→ 100800 105 / 143	Ate	2331301	[o] 23313 20.3		Ate	2392701	[o] 23927 17.3	
	Ate	2331381	[o] 23313 20.3		Ate	2392781	[o] 23927 17.3	
		98044000	L675			98044100	L1143	
	Ate	82074500			Ate	82028700		

BMW

BMW

		kW / hp											
X1 (E84) 03/09→12/11													
		100800		PRO	**92176103**	ø 312 x 24 x 73.5			PRO	**92154903**	ø 300 x 20 x 66	
sDrive 16 i	03/13→	105 / 143			**TPM0003**					**TPM0003**		
										91049300	ø 185 x 20	
										97003100		
		100900	Ate		**2331301**	[o] 23313 20.3		Ate		**2392701**	[o] 23927 17.3	
sDrive 18 d	03/09→	100 / 136										
sDrive 18 d	10/09→	105 / 143	Ate		**2331381**	[o] 23313 20.3		Ate		**2392781**	[o] 23927 17.3	
sDrive 18 i	01/10→	110 / 150										
sDrive 20 d	10/09→	130 / 177			**98042800**	L645	→03/10			**98042900**	L1130	→03/10
					98044000	L675	03/10→			**98044100**	L1143	03/10→
			Ate		**82062900**			Ate		**82028700**		
			Ate		**82074500**			Ate		**82062900**		
				PRO	**92176103**	ø 312 x 24 x 73.5			PRO	**92154903**	ø 300 x 20 x 66	
					TPM0003					**TPM0003**		
										91049300	ø 185 x 20	
										97003100		
		101000	Ate		**2331301**	[o] 23313 20.3		Ate		**2392701**	[o] 23927 17.3	
sDrive 18 i	03/09→	100 / 136										
			Ate		**2331381**	[o] 23313 20.3		Ate		**2392781**	[o] 23927 17.3	
					98042800	L645	→03/10			**98042900**	L1130	→03/10
					98044000	L675	03/10→			**98044100**	L1143	03/10→
			Ate		**82074500**		⊖ M-technology	Ate		**82028700**		
				PRO	**92176103**	ø 312 x 24 x 73.5			PRO	**92154903**	ø 300 x 20 x 66	
					TPM0003					**TPM0003**		
										91049300	ø 185 x 20	
										97003100		
		101100	Ate		**2331301**	[o] 23313 20.3		Ate		**2392701**	[o] 23927 17.3	
sDrive 20 d	03/10→	120 / 163										
sDrive 20 i	09/11→	135 / 184	Ate		**2331381**	[o] 23313 20.3		Ate		**2392781**	[o] 23927 17.3	
					98044000	L675				**98044100**	L1143	
			Ate		**82062900**			Ate		**82028700**		
			Ate		**82074500**			Ate		**82062900**		
				PRO	**92176103**	ø 312 x 24 x 73.5			PRO	**92154903**	ø 300 x 20 x 66	
					TPM0003					**TPM0003**		
										91049300	ø 185 x 20	
										97003100		
		101200	Ate		**2331301**	[o] 23313 20.3		Ate		**2392701**	[o] 23927 17.3	
sDrive 20 d	03/11→	135 / 184										
			Ate		**2331381**	[o] 23313 20.3		Ate		**2392781**	[o] 23927 17.3	
					98044000	L675				**98044100**	L1143	
			Ate		**82074500**			Ate		**82028700**		
				PRO	**92176103**	ø 312 x 24 x 73.5			PRO	**92154903**	ø 300 x 20 x 66	
					TPM0003					**TPM0003**		
										91053300	ø 160.5 x 20	
										97003100		

→

X1 (E84) 03/09→12/11

		101300													
sDrive 20 i Flex	08/14→	135 / 184	Ate		2331301	[o] 23313	20.3		Ate		2392701	[o] 23927	17.3	
			Ate	epad	2331381	[o] 23313	20.3		Ate	epad	2392781	[o] 23927	17.3	
					98044000	L675					98044100	L1143		
			Ate		82074500				Ate		82028700			
				PRO	92176103	ø 312 x 24 x 73.5				PRO	92154903	ø 300 x 20 x 66		
					TPM0003						TPM0003			
											91053300	ø 160.5 x 20		
											97012600			
		101400													
sDrive 28 i	09/11→	179 / 243	Ate		2331301	[o] 23313	20.3	04/12→			98044100	L1143		
			Ate	epad	2331381	[o] 23313	20.3	04/12→	Ate		82028700			
					98044300	L865				PRO	92154903	ø 300 x 20 x 66		
			Ate		82074500						TPM0003			
				PRO	92137803	ø 330 x 24 x 73		→04/12			91049300	ø 185 x 20		
				PRO	92176103	ø 312 x 24 x 73.5		05/12→			97003100			
					TPM0003									
		101500													
sDrive 28 i	09/11→	179 / 243	Ate		2331301	[o] 23313	20.3	04/12→			98044100	L1143		
xDrive 28 i	09/11→	179 / 243	Ate	epad	2331381	[o] 23313	20.3	04/12→	Ate		82028700			
					98044300	L865				PRO	92154903	ø 300 x 20 x 66		
			Ate		82074500						TPM0003			
				PRO	92137803	ø 330 x 24 x 73		→04/12			91049300	ø 185 x 20		
				PRO	92176103	ø 312 x 24 x 73.5		04/12→			97003100			
					TPM0003									
		101600													
xDrive 18 d	03/09→	100 / 136	Ate		2331301	[o] 23313	20.3		Ate		2392701	[o] 23927	17.3	
xDrive 18 d	10/09→	105 / 143	Ate	epad	2331381	[o] 23313	20.3		Ate	epad	2392781	[o] 23927	17.3	
xDrive 20 d	10/09→	130 / 177			98035500	L850		→03/10			98042900	L1130		→03/10
xDrive 20 d	10/09→	135 / 184			98044300	L865		03/10→			98044100	L1143		03/10→
			Ate		82062900				Ate		82028700			
			Ate		82074500				Ate		82062900			
				PRO	92176103	ø 312 x 24 x 73.5				PRO	92154903	ø 300 x 20 x 66		
					TPM0003						TPM0003			
											91049300	ø 185 x 20		
											97003100			
		101700													
xDrive 20 d	03/10→	120 / 163	Ate		2331301	[o] 23313	20.3		Ate		2392701	[o] 23927	17.3	
			Ate	epad	2331381	[o] 23313	20.3		Ate	epad	2392781	[o] 23927	17.3	
					98044300	L865					98044100	L1143		
			Ate		82062900				Ate		82028700			
			Ate		82074500				Ate		82062900			
				PRO	92176103	ø 312 x 24 x 73.5				PRO	92154903	ø 300 x 20 x 66		
					TPM0003						TPM0003			
											91049300	ø 185 x 20		

BMW

BMW

kW / hp

X1 (E84) 03/09→12/11

101700														
xDrive 20 d	03/10→	120 / 163									97003100			
101800			Ate		2331301	[o] 23313 20.3			Ate		2392701	[o] 23927 17.3	
xDrive 20 i	09/11→	135 / 184	Ate	epad	2331381	[o] 23313 20.3			Ate	epad	2392781	[o] 23927 17.3	
					98044300	L865					98044100	L1143	
			Ate		82062900				Ate		82028700		
			Ate		82074500				Ate		82062900		
				PRO	92176103	ø 312 x 24 x 73.5				PRO	92154903	ø 300 x 20 x 66	
					TPM0003						TPM0003		
											91049300	ø 185 x 20	
101900			Ate		2379401	[o] 23794 20.3			Ate		2392701	[o] 23927 17.3	
xDrive 23 d	10/09→	150 / 204											
xDrive 25 i	01/10→	160 / 218	Ate	epad	2379481	[o] 23794 20.3			Ate	epad	2392781	[o] 23927 17.3	
					98035500	L850					98042900	L1130	→03/10
			Ate		82062900						98044100	L1143	03/10→
			Ate		82074500				Ate		82028700		
				PRO	92137803	ø 330 x 24 x 73			Ate		82062900		
					TPM0003					PRO	92154903	ø 300 x 20 x 66	
											TPM0003		
											91049300	ø 185 x 20	
											97003100		
102000			Ate		2331301	[o] 23313 20.3			Ate		2392701	[o] 23927 17.3	
xDrive 25 d	10/09→	160 / 218	Ate	epad	2331381	[o] 23313 20.3			Ate	epad	2392781	[o] 23927 17.3	
					98044300	L865	2011-03→				98044100	L1143	2012-03→
			Ate		82062900				Ate		82028700		
			Ate		82074500				Ate		82062900		
				PRO	92137803	ø 330 x 24 x 73	→2011-04			PRO	92154903	ø 300 x 20 x 66	
				PRO	92176103	ø 312 x 24 x 73.5	2012-03→				TPM0003		
					TPM0003								
102100			Ate		2379401	[o] 23794 20.3			Ate		2392701	[o] 23927 17.3	
xDrive 25 i	09/10→12/11	135 / 184	Ate	epad	2379481	[o] 23794 20.3			Ate	epad	2392781	[o] 23927 17.3	
					98035500	L850	left				98042900	L1130	
			Ate		82074500				Ate		82028700		
				PRO	92137803	ø 330 x 24 x 73				PRO	92154903	ø 300 x 20 x 66	
					TPM0003						TPM0003		
											91049300	ø 185 x 20	
											97003100		
102200			Ate		2331303	[–] 23313 20.3			Ate		2355001	[o] 23550 17.3	
xDrive 28 i	10/09→	190 / 258	Ate	epad	2331382	[o] 23313 20.3			Ate	epad	2355081	[o] 23550 17.3	
					98035500	L850	→03/10				98042900	L1130	→03/10
					98044300	L865	03/10→				98044100	L1143	03/10→
			Ate		82062900				Ate		82057500		

→

X1 (E84) 03/09→12/11

		102200	Ate		82072000			Ate		82062900		
xDrive 28 i	10/09→	190 / 258		PRO	92155303	ø 348 x 30 x 73.2			PRO	92137903	ø 336 x 22 x 67	
					TPM0003					TPM0003		
										91049300	ø 185 x 20	
										97003100		
		102300	Ate		2379401	[o] 23794 20.3		Ate		2392701	[o] 23927 17.3	
xDrive 28 i	04/11→	180 / 245	Ate	epad	2379481	[o] 23794 20.3		Ate	epad	2392781	[o] 23927 17.3	
					98044300	L865				98044100	L1143	
			Ate		82062900			Ate		82028700		
			Ate		82074500			Ate		82062900		
				PRO	92137803	ø 330 x 24 x 73			PRO	92154903	ø 300 x 20 x 66	
					TPM0003					TPM0003		
										91049300	ø 185 x 20	
										97003100		
		102400	Ate		2331303	[–] 23313 20.3		Ate		2355001	[o] 23550 17.3	
xDrive 35 i	09/11→	224 / 305	Ate	epad	2331382	[o] 23313 20.3		Ate	epad	2355081	[o] 23550 17.3	
xDrive 35 i	09/12→	224 / 305			98044300	L865	left			98044100	L1143	
			Ate		82072000			Ate		82057500		
				PRO	92155303	ø 348 x 30 x 73.2			PRO	92137903	ø 336 x 22 x 67	
					TPM0003					TPM0003		
										91049300	ø 185 x 20	
										97003100		

X1 Estate (E84) 03/09→12/11 → X1 (E84), Page 199

X1 Touring (E84) 03/09→12/11 → X1 (E84), Page 199

X3 (E83) 01/04→12/06

		102500	Ate		2318302	[o] 23183 20.3		Ate		2148703	[o] 21487 17.2	
2.0 d	10/04→	110 / 150	Ate	epad	2318381	[o] 23183 20.3				98030700	L1055	
2.0 d	09/07→	130 / 177			98030600	L740		Ate		82057500		
2.0 i	07/05→	110 / 150	Ate		82028600			Ate		82062900		
2.5 i	01/04→	141 / 192	Ate		82062900				PRO	92141603	ø 320 x 22 x 79.5	
2.5 si	09/06→	160 / 218		PRO	92141503	ø 325 x 25 x 62				TPM0003		
3.0 d	01/04→	150 / 204			TPM0003					91058700	ø 185 x 30	
3.0 d	01/04→	160 / 218								97032200		
3.0 i xDrive	01/04→	170 / 231										
3.0 i xDrive	09/06→12/10	160 / 215										
3.0 si	09/06→	200 / 272										
xDrive 20 d	09/08→	120 / 163										
xDrive 20 d	09/08→	130 / 177										
xDrive 25 i	09/08→	160 / 218										
xDrive 30 d	09/08→	155 / 211										
xDrive 30 d	09/08→	160 / 218										
xDrive 30 i	09/08→	200 / 272										
		102600	Ate		2318302	[o] 23183 20.3		Ate		2148701	[o] 21487 17.2	
2.5 i	01/04→12/06	137 / 186	Ate	epad	2318381	[o] 23183 20.3		Ate	epad	2148781	[o] 21487 17.2	
2.5 si xDrive	07/06→12/08	155 / 211			98030600	L740				98030700	L1055	
xDrive 18 d	04/09→	100 / 136	Ate		82028600			Ate		82057500		
				PRO	92141503	ø 325 x 25 x 62			PRO	92141603	ø 320 x 22 x 79.5	
					TPM0003					TPM0003		
										91058700	ø 185 x 30	
										97032200		

BMW

BMW

30 kW / hp

X3 (E83) 01/04→12/06

102700														
3.0 i	01/04→12/06	168 / 228	Ate		2318302	[o] 23183 20.3			Ate		2148701	[o] 21487 17.2	
			Ate	epad	2318381	[o] 23183 20.3			Ate		2148703	[o] 21487 17.2	
					98030600	L740			Ate	epad	2148781	[o] 21487 17.2	
			Ate		82028600						98030700	L1055	
				PRO	92141503	ø 325 x 25 x 62			Ate		82057500		
					TPM0003					PRO	92141603	ø 320 x 22 x 79.5	
											TPM0003		
											91058700	ø 185 x 30	
											97032200		
102800														
3.0 sd	09/06→	210 / 286	Ate		2148604	[o] 21486 19.3			Ate		2148703	[o] 21487 17.2	
xDrive 35 d	09/08→	210 / 286	Ate	epad	2148681	[o] 21486 19.3					98030700	L1055	
					98036100	L744			Ate		82057500		
			Ate		82062900				Ate		82062900		
			Ate		82072800					PRO	92141603	ø 320 x 22 x 79.5	
				PRO	92107303	ø 332 x 30 x 62					TPM0003		
					TPM0003						91058700	ø 185 x 30	
											97032200		
102900														
xDrive 18 d	09/08→	105 / 143	Ate		2318302	[o] 23183 20.3			Ate		2148703	[o] 21487 17.2	
			Ate	epad	2318381	[o] 23183 20.3					98030700	L1055	
					98030600	L740			Ate		82057500		
			Ate		82028600				Ate		82062900		
			Ate		82062900					PRO	92141603	ø 320 x 22 x 79.5	
				PRO	92141503	ø 325 x 25 x 62					TPM0003		
					TPM0003						91049300	ø 185 x 20	
											97003100		
103000														
xDrive 20 i	09/08→	110 / 150	Ate		2318302	[o] 23183 20.3			Ate		2148703	[o] 21487 17.2	
			Ate	epad	2318381	[o] 23183 20.3					98030700	L1055	
					98030600	L740			Ate		82057500		
			Ate		82028600				Ate		82062900		
			Ate		82062900					PRO	92141603	ø 320 x 22 x 79.5	
				PRO	92141503	ø 325 x 25 x 62					TPM0003		
					TPM0003						91058700	ø 185 x 30	
											97003100		

X3 (F25) 09/10→

103100														
sDrive 18 d	08/11→	100 / 136	Bos		2519901	[o] 25199 19.2			TRW		2456101	[o] 24561 18	
sDrive 18 d	08/11→	105 / 143											
xDrive 20 d	09/10→	120 / 163			98043500	L955			TRW	epad	2456181	[o] 24561 18	
xDrive 20 d	09/10→	135 / 184											
xDrive 20 i	09/11→	135 / 184	Ate		82517800						98046200	L1243	
xDrive 30 d	05/11→	190 / 258											
xDrive 35 d	09/11→	230 / 313		PRO	92257103	ø 328 x 28 x 73			Luc		82518900		
					TPM0003					PRO	92256303	ø 330 x 20 x 71	
											TPM0003		

→

		kW / hp												
X3 (F25) 09/10→														
		103200	Bos		2519901	[o] 25199 19.2		TRW		2456101	[o] 24561 18	
sDrive 18 d	02/14→	110 / 150			98043500	L955		TRW	epad	2456181	[o] 24561 18	
sDrive 20 i	02/14→	135 / 184	Ate		82517800					98046200	L1243	
xDrive 20 d	02/14→	140 / 190		PRO	92257103	ø 328 x 28 x 73			PRO	92256303	ø 330 x 20 x 71	→2014-05
					TPM0003					TPM0003		
		103300	Bos		2519901	[o] 25199 19.2	10/11→	TRW		2456101	[o] 24561 18	10/11→
xDrive 28 i	09/10→	179 / 243			98043500	L955		TRW	epad	2456181	[o] 24561 18	10/11→
			Ate		82517800					98046200	L1243	
				PRO	92257103	ø 328 x 28 x 73			PRO	92256303	ø 330 x 20 x 71	
					TPM0003					TPM0003		
		103400	Bos		2519901	[o] 25199 19.2		TRW		2456101	[o] 24561 18	
xDrive 28 i	04/11→	190 / 258			98042500	L1066		TRW	epad	2456181	[o] 24561 18	
			Ate		82517800			Ate		2530701	[o] 25307 17.2	⊕USA
				PRO	92257103	ø 328 x 28 x 73				98046200	L1243	
					TPM0003			Luc		82518900		
									PRO	92256303	ø 330 x 20 x 71	
										TPM0003		
		103500	Bos		2519901	[o] 25199 19.2		TRW		2456101	[o] 24561 18	
xDrive 28 i	08/11→	180 / 245			98043500	L955		TRW	epad	2456181	[o] 24561 18	
xDrive 35 i	09/10→	225 / 306	Ate		82517800			Ate		2530701	[o] 25307 17.2	⊕USA
				PRO	92257103	ø 328 x 28 x 73				98046200	L1243	
					TPM0003			Luc		82518900		
									PRO	92256303	ø 330 x 20 x 71	
										TPM0003		
X4 (F26) 04/14→														
		103600	Bos		2519901	[o] 25199 19.2		TRW		2456101	[o] 24561 18	
xDrive 20 d	04/14→	140 / 190			98043500	L955	left	TRW	epad	2456181	[o] 24561 18	
xDrive 20 i	04/14→	135 / 184	Ate		82517800					98046200	L1243	
xDrive 28 i	04/14→	180 / 245		PRO	92257103	ø 328 x 28 x 73			PRO	92256303	ø 330 x 20 x 71	→05/14
xDrive 30 d	04/14→	190 / 258			TPM0003					TPM0003		
xDrive 35 d	04/14→	230 / 313										
xDrive 35 i	04/14→	225 / 306										
		103700	Bos		2519901	[o] 25199 19.2		TRW		2456101	[o] 24561 18	
xDrive 20 d	06/14→	120 / 163			98043500	L955		TRW	epad	2456181	[o] 24561 18	
			Ate		82517800					98046200	L1243	
				PRO	92257103	ø 328 x 28 x 73			PRO	92256303	ø 330 x 20 x 71	
					TPM0003					TPM0003		
X5 (E53) 05/00→12/06														
		103800	Ate		2148602	[o] 21486 19.3		Ate		2148701	[o] 21487 17.2	
3.0	06/00→12/06	168 / 228	Ate		2148681	[o] 21486 19.3		Ate	epad	2148781	[o] 21487 17.2	
					98026700	L800				98026800	L715	
			Ate		82072800			Ate		82057500		

BMW

BMW

		kW / hp										
X5 (E53) 05/00→12/06												
103800				PRO	**92107203**	ø 332 x 30 x 62	→09/00		PRO	**92107403**	ø 324 x 12 x 80	
3.0	06/00→12/06	168 / 228		PRO	**92107303**	ø 332 x 30 x 62	09/00→			**TPM0003**		
					TPM0003					**91058700**	ø 185 x 30	
										97032200		
103900			Ate		**2148602**	[o] 21486 19.3		Ate		**2148701**	[o] 21487 17.2	
3.0 d	05/01→	135 / 184										
3.0 d	12/03→	160 / 218										
3.0 d	08/04→	155 / 211	Ate	epad	**2148681**	[o] 21486 19.3		Ate	epad	**2148781**	[o] 21487 17.2	
					98026700	L800				**98026800**	L715	
			Ate		**82062900**			Ate		**82057500**		
			Ate		**82072800**			Ate		**82062900**		
				PRO	**92107303**	ø 332 x 30 x 62			PRO	**92107403**	ø 324 x 12 x 80	
					TPM0003					**TPM0003**		
										91058700	ø 185 x 30	
										97032200		
104000			Ate		**2148602**	[o] 21486 19.3		Ate		**2148701**	[o] 21487 17.2	
3.0 i	05/00→	163 / 222	Ate	epad	**2148681**	[o] 21486 19.3		Ate	epad	**2148781**	[o] 21487 17.2	
					98026700	L800				**98026800**	L715	
			Ate		**82062900**			Ate		**82057500**		
			Ate		**82072800**			Ate		**82062900**		
				PRO	**92107203**	ø 332 x 30 x 62	→09/00		PRO	**92107403**	ø 324 x 12 x 80	
				PRO	**92107303**	ø 332 x 30 x 62	07/00→			**TPM0003**		
					TPM0003					**91058700**	ø 185 x 30	
										97032200		
104100			Ate		**2148602**	[o] 21486 19.3		Ate		**2148701**	[o] 21487 17.2	
3.0 i	05/00→	170 / 231	Ate	epad	**2148681**	[o] 21486 19.3		Ate	epad	**2148781**	[o] 21487 17.2	
					98026700	L800				**98026800**	L715	
			Ate		**82062900**			Ate		**82057500**		
			Ate		**82072800**			Ate		**82062900**		
				PRO	**92107203**	ø 332 x 30 x 62	→09/00		PRO	**92107403**	ø 324 x 12 x 80	
				PRO	**92107303**	ø 332 x 30 x 62	08/00→			**TPM0003**		
					TPM0003					**91058700**	ø 185 x 30	
										97032200		
104200			Ate		**2148602**	[o] 21486 19.3		Ate		**2148701**	[o] 21487 17.2	
4.4 i	05/00→	210 / 286	Ate	epad	**2148681**	[o] 21486 19.3		Ate	epad	**2148781**	[o] 21487 17.2	
					98026700	L800				**98026800**	L715	
			Ate		**82062900**			Ate		**82057500**		
			Ate		**82072800**			Ate		**82062900**		
				PRO	**92107203**	ø 332 x 30 x 62	→09/00		PRO	**92107403**	ø 324 x 12 x 80	
				PRO	**92107303**	ø 332 x 30 x 62	09/00→			**TPM0003**		
					TPM0003					**91058700**	ø 185 x 30	
										97032200		

→

X5 (E53) 05/00→12/06

4.4 i	12/03→	104300 235 / 320	Ate	2148602	[o] 21486 19.3	⊖ arm.veh.	Ate	2148701	[o] 21487 17.2	
			Ate	2148681	[o] 21486 19.3	⊖ arm.veh.	Ate	2148781	[o] 21487 17.2	
			Ate	2344801	[o] 23448 20.8	⊕ arm.veh.		98026800	L715	
				98026700	L800		Ate	82057500		
			Ate	82062900			Ate	82062900		
			Ate	82071900		⊕ arm.veh.		92146303	ø 324 x 20 x 80.1	
			Ate	82072800		⊖ arm.veh.		TPM0003		
				92107203	ø 332 x 30 x 62	⊖ arm.veh.		91058700	ø 185 x 30	
				92107303	ø 332 x 30 x 62	⊖ arm.veh.		97032200		
				92146203	ø 356 x 36 x 62	⊕ arm.veh.				
				TPM0003						
4.6 is	09/01→12/03	104400 261 / 355	Ate	2344801	[o] 23448 20.8		Ate	2148701	[o] 21487 17.2	
				98026700	L800		Ate	2148781	[o] 21487 17.2	
			Ate	82071900				98026800	L715	
				92146203	ø 356 x 36 x 62		Ate	82057500		
				TPM0003				92146303	ø 324 x 20 x 80.1	
								TPM0003		
								91058700	ø 185 x 30	
								97032200		
4.6 is 4.8 is	02/02→ 04/04→	104500 255 / 347 265 / 360	Ate	2344801	[o] 23448 20.8		Ate	2148701	[o] 21487 17.2	
				98026700	L800		Ate	2148781	[o] 21487 17.2	
			Ate	82062900				98026800	L715	
			Ate	82071900			Ate	82057500		
				92146203	ø 356 x 36 x 62		Ate	82062900		
				TPM0003				92146303	ø 324 x 20 x 80.1	
								TPM0003		
								91058700	ø 185 x 30	
								97032200		

X5 (E70) 02/07→12/10

3.0 d	02/07→09/08	104600 155 / 211	Ate	2417001	[o] 24170 19.7		Ate	2344704	[o] 23447 17.3	
			Ate	2417081	[o] 24170 19.7			98035200	L1006	
				98035000	L960		Ate	82062900		
			Ate	82062900			Ate	82072700		
			Ate	82074600				92161103	ø 320 x 20 x 78.6	
				92160903	ø 348 x 30 x 62			TPM0003		
				TPM0003				91058700	ø 185 x 30	
								97032200		
3.0 d	02/07→09/08	104700 173 / 235	Ate	2417001	[o] 24170 19.7		Ate	2344704	[o] 23447 17.3	Ø 320 mm
			Ate	2417081	[o] 24170 19.7		Ate	2373001	[o] 23730 17.3	Ø 345 mm
				98035000	L960		Ate	2373081	[o] 23730 17.3	Ø 345 mm

BMW

BMW

		kW / hp											
X5 (E70) 02/07→12/10													
104700			Ate		82062900					98035200	L1006	
3.0 d	02/07→09/08	173 / 235	Ate		82074600				Ate	82062900		
				PRO	92160903	ø 348 x 30 x 62			Ate	82072700		
					TPM0003				PRO	92161103	ø 320 x 20 x 78.6	
									PRO	92161203	ø 345 x 24 x 78	
										TPM0003		
										91058700	ø 185 x 30	
										97032200		
104800			Ate		2417201	[o] 24172 19.7			Ate	2373001	[o] 23730 17.3	
3.0 sd	09/07→02/09	210 / 286			98035100	L953			Ate	2373081	[o] 23730 17.3	
			Ate		82062900					98035200	L1006	
			Ate		82074800				Ate	82062900		
				PRO	92161003	ø 365 x 36 x 62			Ate	82072700		
					TPM0003					TPM0003		
										91058700	ø 185 x 30	
										97032200		
104900			Ate		2417001	[o] 24170 19.7			Ate	2344704	[o] 23447 17.3	
3.0 si	02/07→09/08	171 / 230										
3.0 si	02/07→09/08	200 / 272	Ate		2417081	[o] 24170 19.7				98035200	L1006	
xDrive 30 i	09/08→03/10	200 / 272			98035000	L960			Ate	82062900		
			Ate		82062900				Ate	82072700		
			Ate		82074600					92161103	ø 320 x 20 x 78.6	
				PRO	92160803	ø 332 x 30 x 62				TPM0003		
					TPM0003					91058700	ø 185 x 30	
										97032200		
105000			Ate		2417001	[o] 24170 19.7	Ø 348 mm		Ate	2373001	[o] 23730 17.3	
4.8 i xDrive	02/07→09/08	261 / 355	Ate		2417081	[o] 24170 19.7	Ø 348 mm		Ate	2373081	[o] 23730 17.3	
			Ate		2417201	[o] 24172 19.7	Ø 365 mm			98035200	L1006	
					98035000	L960	Ø 348 mm		Ate	82062900		
					98035100	L953	Ø 365 mm		Ate	82072700		
			Ate		82062900					92161203	ø 345 x 24 x 78	
			Ate		82074600		Ø 348 mm			TPM0003		
			Ate		82074800		Ø 365 mm			91058700	ø 185 x 30	
				PRO	92160903	ø 348 x 30 x 62				97032200		
				PRO	92161003	ø 365 x 36 x 62						
					TPM0003							
105100			Bre		2452401	[o] 24524 19.4			Ate	2445801	[o] 24458 17.1	
M	09/09→	408 / 555			98043400	L1020	04/10→			98035200	L1006	→04/10
			Ate		82062900					98043600	L1047	04/10→
					TPM0003				Ate	82062900		
									Ate	82072700		

→

30 kW / hp

X5 (E70) 02/07→12/10

M	09/09→	105100 408 / 555							TPM0003		
									91058700	ø 185 x 30	
									97032200		
M 50 d	08/11→	105200 280 / 381	Ate	2443601	[o] 24436 19.9		Ate	2373001	[o] 23730 17.3	
				98044500	L1005	left	Ate	2373081	[o] 23730 17.3	
			Ate	82062900				98043600	L1047	
				TPM0003		2x	Ate	82062900		
							Ate	82072700		
								92161203	ø 345 x 24 x 78	
								TPM0003		2x
								91058700	ø 185 x 30	
								97032200		
xDrive 30 d	09/08→	105300 155 / 211	Ate	2417001	[o] 24170 19.7		Ate	2344704	[o] 23447 17.3	
			Ate	2417081	[o] 24170 19.7			98043600	L1047	
				98044400	L985	left	Ate	82072700		
			Ate	82074600				92161103	ø 320 x 20 x 78.6	
				92160803	ø 332 x 30 x 62			TPM0003		
				TPM0003				91058700	ø 185 x 30	
								97032200		
xDrive 30 d	09/08→	105400 173 / 235	Ate	2417001	[o] 24170 19.7		Ate	2344704	[o] 23447 17.3	Ø 320 mm
			Ate	2417081	[o] 24170 19.7		Ate	2373001	[o] 23730 17.3	Ø 345 mm
				98035000	L960		Ate	2373081	[o] 23730 17.3	Ø 345 mm
			Ate	82062900				98035200	L1006	→04/10
			Ate	82074600				98043600	L1047	04/10→
				92160903	ø 348 x 30 x 62		Ate	82062900		
				TPM0003			Ate	82072700		
								92161103	ø 320 x 20 x 78.6	
								92161203	ø 345 x 24 x 78	
								TPM0003		
								91058700	ø 185 x 30	
								97032200		
xDrive 30 d	09/10→	105500 180 / 245	Ate	2417001	[o] 24170 19.7		Ate	2344704	[o] 23447 17.3	Ø 320 mm
			Ate	2417081	[o] 24170 19.7		Ate	2373001	[o] 23730 17.3	Ø 345 mm
				98044400	L985		Ate	2373081	[o] 23730 17.3	Ø 345 mm
			Ate	82062900				98043600	L1047	
			Ate	82074600			Ate	82062900		
				92160803	ø 332 x 30 x 62		Ate	82072700		
				TPM0003				92161103	ø 320 x 20 x 78.6	
								TPM0003		
								91058700	ø 185 x 30	

BMW

BMW

30 kW / hp

X5 (E70) 02/07→12/10

xDrive 30 d	09/10→	105500 180 / 245									97032200			
xDrive 30 i	09/08→12/10	105600 171 / 230	Ate		2417001	[o] 24170 19.7			Ate		2344704	[o] 23447 17.3	
			Ate	epad	2417081	[o] 24170 19.7					98035200	L1006	→04/10
					98035000	L960					98043600	L1047	04/10→
			Ate		82062900				Ate		82062900		
			Ate		82074600				Ate		82072700		
				PRO	92160803	ø 332 x 30 x 62				PRO	92161103	ø 320 x 20 x 78.6	
					TPM0003						TPM0003		
											91058700	ø 185 x 30	
											97032200		
xDrive 35 d	09/08→	105700 210 / 286	Ate		2417001	[o] 24170 19.7	10/08→		Ate		2344704	[o] 23447 17.3	10/09→
			Ate	epad	2417081	[o] 24170 19.7	10/08→		Ate		2373001	[o] 23730 17.3	→10/09
			Ate		2417201	[o] 24172 19.7	→10/08		Ate	epad	2373081	[o] 23730 17.3	→10/09
					98035000	L960	10/08→				98035200	L1006	→04/10
					98035100	L953	→10/08				98043600	L1047	04/10→
			Ate		82062900				Ate		82062900		
			Ate		82074600		10/08→		Ate		82072700		
			Ate		82074800		→10/08				TPM0003		
				PRO	92160903	ø 348 x 30 x 62	10/08→				91058700	ø 185 x 30	
				PRO	92161003	ø 365 x 36 x 62	→10/08				97032200		
					TPM0003								
xDrive 35 i	09/10→	105800 225 / 306	Ate		2417001	[o] 24170 19.7			Ate		2344704	[o] 23447 17.3	
			Ate	epad	2417081	[o] 24170 19.7					98043600	L1047	
					98044400	L985			Ate		82062900		
			Ate		82062900				Ate		82072700		
			Ate		82074600					PRO	92161103	ø 320 x 20 x 78.6	
				PRO	92160803	ø 332 x 30 x 62					TPM0003		
				PRO	92160903	ø 348 x 30 x 62					91058700	ø 185 x 30	
					TPM0003						97032200		
xDrive 35 i	02/12→	105900 235 / 320	Ate		2417001	[o] 24170 19.7			Ate		2344704	[o] 23447 17.3	
			Ate	epad	2417081	[o] 24170 19.7					98043600	L1047	
					98044400	L985	left		Ate		82072700		
			Ate		82074600					PRO	92161103	ø 320 x 20 x 78.6	
				PRO	92160803	ø 332 x 30 x 62					TPM0003		
				PRO	92160903	ø 348 x 30 x 62					91058700	ø 185 x 30	
					TPM0003						97032200		
xDrive 40 d	09/10→	106000 225 / 306	Ate		2417001	[o] 24170 19.7			Ate		2344704	[o] 23447 17.3	
			Ate	epad	2417081	[o] 24170 19.7					98043600	L1047	
					98044400	L985			Ate		82062900		
			Ate		82062900				Ate		82072700		

→

30 kW / hp											
X5 (E70) 02/07→12/10											
xDrive 40 d	09/10→	106000 225 / 306	Ate		82074600				PRO	92161103	ø 320 x 20 x 78.6
				PRO	92160903	ø 348 x 30 x 62				TPM0003	
					TPM0003					91058700	ø 185 x 30
										97032200	
xDrive 48 i	09/08→	106100 261 / 355	Ate		2417001	[o] 24170 19.7	Ø 348 mm	Ate		2373001	[o] 23730 17.3
			Ate	epad	2417081	[o] 24170 19.7	Ø 348 mm	Ate	epad	2373081	[o] 23730 17.3
			Ate		2417201	[o] 24172 19.7	Ø 365 mm			98035200	L1006 →04/10
					98035000	L960	Ø 348 mm			98043600	L1047 04/10→
					98035100	L953	Ø 365 mm	Ate		82062900	
			Ate		82062900			Ate		82072700	
			Ate		82074600				PRO	92161203	ø 345 x 24 x 78
			Ate		82074800		Ø 365 mm			TPM0003	
				PRO	92160903	ø 348 x 30 x 62				91058700	ø 185 x 30
				PRO	92161003	ø 365 x 36 x 62				97032200	
					TPM0003						
xDrive 50 i	09/09→	106200 298 / 405	Ate		2417201	[o] 24172 19.7	⊕ USA ⊕ arm.veh.	Ate		2373001	[o] 23730 17.3
			Ate		2443601	[o] 24436 19.9		Ate	epad	2373081	[o] 23730 17.3
					98043400	L1020	left ⊕ USA ⊕ arm.veh.			98043600	L1047
					98044500	L1005	left	Ate		82072700	
			Ate		82074800		⊕ USA ⊕ arm.veh.		PRO	92161203	ø 345 x 24 x 78
				PRO	92161003	ø 365 x 36 x 62	⊕ USA ⊕ arm.veh.			TPM0003	
					TPM0003					91058700	ø 185 x 30
										97032200	
xDrive 50 i	06/10→	106300 300 / 408	Ate		2417201	[o] 24172 19.7	⊕ USA ⊕ arm.veh.	Ate		2373001	[o] 23730 17.3
			Ate		2443601	[o] 24436 19.9		Ate	epad	2373081	[o] 23730 17.3
					98043400	L1020	⊕ USA ⊕ arm.veh.			98043600	L1047
					98044500	L1005		Ate		82062900	
			Ate		82062900			Ate		82072700	
			Ate		82074600				PRO	92161203	ø 345 x 24 x 78
				PRO	92161003	ø 365 x 36 x 62	⊕ USA ⊕ arm.veh.			TPM0003	
					TPM0003					91058700	ø 185 x 30
X5 (F15) 11/12→											
M 50 d	11/12→	106400 280 / 381	Ate		2443601	[o] 24436 19.9		Ate		2373001	[o] 23730 17.3
					98044500	L1005	left	Ate	epad	2373081	[o] 23730 17.3
					TPM0003					98043600	L1047
								Ate		82072700	
									PRO	92161203	ø 345 x 24 x 78
										TPM0003	
										91058700	ø 185 x 30
										97032200	

BMW

BMW

X5 (F15) 11/12→

sDrive 25 d	01/13→	106500 160 / 218	Ate		2417001	[o] 24170 19.7		Ate		2344704	[o] 23447 17.3	
xDrive 25 d	01/13→	160 / 218	Ate	epad	2417081	[o] 24170 19.7				98043600	L1047	
					98044400	L985		Ate		82072700		
			Ate		82074600				PRO	92161103	ø 320 x 20 x 78.6	
				PRO	92160803	ø 332 x 30 x 62				TPM0003		
					TPM0003					91058700	ø 185 x 30	
										97032200		
xDrive 30 d	11/12→	106600 190 / 258	Ate		2417001	[o] 24170 19.7		Ate		2344704	[o] 23447 17.3	
			Ate	epad	2417081	[o] 24170 19.7				98043600	L1047	
					98044400	L985	left	Ate		82072700		
			Ate		82074600					TPM0003		
				PRO	92160803	ø 332 x 30 x 62				91058700	ø 185 x 30	
					TPM0003					97032200		
xDrive 35 i	01/13→	106700 225 / 306	Ate		2417001	[o] 24170 19.7		Ate		2344704	[o] 23447 17.3	⊕ USA
			Ate	epad	2417081	[o] 24170 19.7		Ate		2373001	[o] 23730 17.3	⊖ USA
					98044400	L985		Ate	epad	2373081	[o] 23730 17.3	⊖ USA
			Ate		82074600					98043600	L1047	
				PRO	92160903	ø 348 x 30 x 62		Ate		82072700		
					TPM0003				PRO	92161203	ø 345 x 24 x 78	
										TPM0003		
										91058700	ø 185 x 30	
										97032200		
xDrive 35 i	01/13→	106800 240 / 326	Ate		2417001	[o] 24170 19.7				98043600	L1047	
			Ate	epad	2417081	[o] 24170 19.7		Ate		82072700		
					98044400	L985	left		PRO	92161203	ø 345 x 24 x 78	
			Ate		82074600					TPM0003		
				PRO	92160903	ø 348 x 30 x 62				91058700	ø 185 x 30	
					TPM0003					97032200		
xDrive 40 d	12/13→	106900 230 / 313	Ate		2417001	[o] 24170 19.7		Ate		2373001	[o] 23730 17.3	
			Ate	epad	2417081	[o] 24170 19.7		Ate	epad	2373081	[o] 23730 17.3	
					98044400	L985	left			98043600	L1047	
			Ate		82074600			Ate		82072700		
				PRO	92160903	ø 348 x 30 x 62			PRO	92161203	ø 345 x 24 x 78	
					TPM0003					TPM0003		
										91058700	ø 185 x 30	
										97032200		
xDrive 50 i	11/12→	107000 330 / 449	Ate		2417201	[o] 24172 19.7	⊖ M-technology ⊕ USA	Ate		2373001	[o] 23730 17.3	
			Ate		2443601	[o] 24436 19.9		Ate	epad	2373081	[o] 23730 17.3	
					98044500	L1005	left			98043600	L1047	
					TPM0003			Ate		82072700		

→

		kW / hp										
X5 (F15) 11/12→												
107000												
xDrive 50 i	11/12→	330 / 449							PRO	92161203	ø 345 x 24 x 78	
										TPM0003		
										91058700	ø 185 x 30	
										97032200		
107100			Ate		2417201	[o] 24172 19.7		Ate		2373001	[o] 23730 17.3	
xDrive 50 i	07/13→	332 / 452			98043400	L1020	left	Ate	epad	2373081	[o] 23730 17.3	
			Ate		82074800					98043600	L1047	
				PRO	92161003	ø 365 x 36 x 62		Ate		82072700		
					TPM0003					91058700	ø 185 x 30	
										97032200		
X6 (E71, E72) 05/08→												
107200			Ate		2417001	[o] 24170 19.7		Ate		2344704	[o] 23447 17.3	Ø 320 mm
30 d	05/08→	173 / 235										
xDrive 30 d	09/08→	173 / 235	Ate	epad	2417081	[o] 24170 19.7		Ate		2373001	[o] 23730 17.3	Ø 345 mm
					98035000	L960	left	Ate	epad	2373081	[o] 23730 17.3	Ø 345 mm
			Ate		82062900					98035200	L1006	→04/10
			Ate		82074600					98043600	L1047	04/10→
				PRO	92160903	ø 348 x 30 x 62		Ate		82062900		
					TPM0003				PRO	92161103	ø 320 x 20 x 78.6	
									PRO	92161203	ø 345 x 24 x 78	
										TPM0003		
										91058700	ø 185 x 30	
										97032200		
107300			Ate		2417001	[o] 24170 19.7	10/08→ Ø 348 mm	Ate		2373001	[o] 23730 17.3	
35 d	05/08→	210 / 286										
xDrive 35 d	09/08→	210 / 286	Ate	epad	2417081	[o] 24170 19.7	10/08→ Ø 348 mm	Ate	epad	2373081	[o] 23730 17.3	
			Ate		2417201	[o] 24172 19.7	→10/08 Ø 365 mm			98035200	L1006	→04/10
					98035000	L960	left 10/08→			98043600	L1047	04/10→
					98035100	L953	left →10/08	Ate		82062900		
			Ate		82062900			Ate		82072700		
			Ate		82074600				PRO	92161203	ø 345 x 24 x 78	
			Ate		82074800					TPM0003		
				PRO	92160903	ø 348 x 30 x 62				91058700	ø 185 x 30	
				PRO	92161003	ø 365 x 36 x 62				97032200		
					TPM0003							
107400			Ate		2417001	[o] 24170 19.7	Ø 348 mm	Ate		2373001	[o] 23730 17.3	Ø 345 mm
35 i	05/08→	225 / 306	Ate	epad	2417081	[o] 24170 19.7	Ø 348 mm	Ate	epad	2373081	[o] 23730 17.3	Ø 345 mm
			Ate		2417201	[o] 24172 19.7	Ø 365 mm			98035200	L1006	→04/10
					98035000	L960	left Ø 348 mm			98043600	L1047	04/10→
					98035100	L953	Ø 365 mm	Ate		82062900		
			Ate		82062900			Ate		82072700		
			Ate		82074600					TPM0003		

BMW

BMW

		kW / hp										
X6 (E71, E72) 05/08→												
107400												
35 i	05/08→	225 / 306	Ate	82074800					91058700	ø 185 x 30	
				TPM0003					97032200		
107500												
50 i	05/08→	300 / 408	Ate	2417201	[o] 24172 19.7	365x36 -brake	Ate	2373001	[o] 23730 17.3	10/09→
				98041300	L990		Ate epad	2373081	[o] 23730 17.3	10/09→
			Ate	82062900			Ate	2445801	[o] 24458 17.1	→10/09
			Ate	82074600				98035200	L1006	→04/10
				TPM0003				98043600	L1047	04/10→
							Ate	82062900		
							Ate	82072700		
							PRO	92161203	ø 345 x 24 x 78	10/09→
								TPM0003		
								91058700	ø 185 x 30	
								97032200		
107600												
ActiveHybrid	10/10→	357 / 485	Ate	2443601	[o] 24436 19.9		Ate	2373001	[o] 23730 17.3	
				98044500	L1005		Ate epad	2373081	[o] 23730 17.3	
			Ate	82062900				98043600	L1047	
				TPM0003			Ate	82062900		
							Ate	82072700		
							PRO	92161203	ø 345 x 24 x 78	
								TPM0003		
								91058700	ø 185 x 30	
								97032200		
107700												
M	09/09→	408 / 555	Bre	2452401	[o] 24524 19.4		Ate	2445801	[o] 24458 17.1	
				98043400	L1020	04/10→		98035200	L1006	→04/10
			Ate	82062900				98043600	L1047	04/10→
				TPM0003			Ate	82062900		
							Ate	82072700		
								TPM0003		
								91058700	ø 185 x 30	
								97032200		
107800												
M	09/09→	414 / 563	Bre	2452401	[o] 24524 19.4		Ate	2445801	[o] 24458 17.1	
				98043400	L1020	left 04/12→		98035200	L1006	→04/12
				TPM0003				98043600	L1047	04/12→
							Ate	82072700		
								TPM0003		
								91058700	ø 185 x 30	
								97032200		
107900												
M 50 d	08/11→	280 / 381	Ate	2443601	[o] 24436 19.9		Ate	2373001	[o] 23730 17.3	
				98044500	L1005	left	Ate epad	2373081	[o] 23730 17.3	
			Ate	82062900				98043600	L1047	

→

30 kW / hp

X6 (E71, E72) 05/08→

M 50 d	08/11→	107900 280 / 381			TPM0003		2x	Ate	82062900		
								Ate	82072700		
									92161203	ø 345 x 24 x 78	
									TPM0003		2x
									91058700	ø 185 x 30	
									97032200		
xDrive 30 d	09/10→	108000 155 / 211	Ate		2417001	[o] 24170 19.7		Ate	2344704	[o] 23447 17.3	Ø 320 mm
xDrive 30 d	09/10→	180 / 245	Ate	epad	2417081	[o] 24170 19.7		Ate	2373001	[o] 23730 17.3	Ø 345 mm
					98044400	L985		Ate	2373081	[o] 23730 17.3	Ø 345 mm
			Ate		82062900				98043600	L1047	
			Ate		82074600			Ate	82062900		
				PRO	92160803	ø 332 x 30 x 62		Ate	82072700		
					TPM0003				92161103	ø 320 x 20 x 78.6	
									TPM0003		
									91058700	ø 185 x 30	
									97032200		
xDrive 35 i	09/08→	108100 225 / 306	Ate		2417001	[o] 24170 19.7	Ø 348 mm	Ate	2373001	[o] 23730 17.3	Ø 345 mm
			Ate	epad	2417081	[o] 24170 19.7	Ø 348 mm	Ate	2373081	[o] 23730 17.3	Ø 345 mm
			Ate		2417201	[o] 24172 19.7	Ø 365 mm		98035200	L1006	
					98035000	L960	left Ø 348 mm		98043600	L1047	04/10→
					98035100	L953	Ø 365 mm	Ate	82062900		
			Ate		82062900			Ate	82072700		
			Ate		82074600				TPM0003		
			Ate		82074800				91058700	ø 185 x 30	
					TPM0003				97032200		
xDrive 35 i	08/09→	108200 240 / 326	Ate		2417001	[o] 24170 19.7		Ate	2344704	[o] 23447 17.3	
			Ate	epad	2417081	[o] 24170 19.7			98043600	L1047	
					98044400	L985		Ate	82072700		
			Ate		82074600				92161103	ø 320 x 20 x 78.6	
				PRO	92160903	ø 348 x 30 x 62			TPM0003		
					TPM0003				91058700	ø 185 x 30	
									97032200		
xDrive 35 i	01/12→	108300 235 / 320	Ate		2417001	[o] 24170 19.7	Ø 348 mm	Ate	2373001	[o] 23730 17.3	Ø 345 mm
			Ate	epad	2417081	[o] 24170 19.7	Ø 348 mm	Ate	2373081	[o] 23730 17.3	Ø 345 mm
			Ate		2417201	[o] 24172 19.7	Ø 365 mm		98035200	L1006	
					98035000	L960	left Ø 348 mm		98043600	L1047	
					98035100	L953	Ø 365 mm	Ate	82062900		
			Ate		82062900			Ate	82072700		
			Ate		82074600				TPM0003		
			Ate		82074800				91058700	ø 185 x 30	

BMW

BMW

		kW / hp											
X6 (E71, E72) 05/08→													
108300				**TPM0003**						**97032200**		
xDrive 35 i	01/12→	235 / 320										
108400			Ate	**2417001**	[o] 24170 19.7		Ate	**2344704**	[o] 23447 17.3	
xDrive 40 d	10/10→	225 / 306	Ate	**2417081**	[o] 24170 19.7			**98043600**	L1047	
				98044400	L985		Ate	**82062900**		
			Ate	**82062900**			Ate	**82072700**		
			Ate	**82074600**				**92161103**	ø 320 x 20 x 78.6	
				92160903	ø 348 x 30 x 62			**TPM0003**		
				TPM0003				**91058700**	ø 185 x 30	
								97032200		
108500			Ate	**2417201**	[o] 24172 19.7	⊕ USA ⊕ arm.veh.	Ate	**2373001**	[o] 23730 17.3	10/09→
xDrive 50 i	05/08→	298 / 405	Ate	**2443601**	[o] 24436 19.9		Ate	**2373081**	[o] 23730 17.3	10/09→
				98035100	L953	→04/10 ⊕ USA ⊕ arm.veh.	Ate	**2445801**	[o] 24458 17.1	→10/09
				98041300	L990	→04/10		**98035200**	L1006	→04/10
				98043400	L1020	left 04/10→ ⊕ USA ⊕ arm.veh.		**98043600**	L1047	04/10→
				98044500	L1005	left 04/10→ →10/12	Ate	**82072700**		
			Ate	**82074800**		⊕ USA ⊕ arm.veh.		**92161203**	ø 345 x 24 x 78	10/09→
				92161003	ø 365 x 36 x 62	⊕ USA		**TPM0003**		
				TPM0003				**91058700**	ø 185 x 30	
								97032200		
108600			Ate	**2417201**	[o] 24172 19.7	Ø 365 mm	Ate	**2373001**	[o] 23730 17.3	10/09→
xDrive 50 i	09/08→	300 / 408	Ate	**2443601**	[o] 24436 19.9	Ø 385 mm	Ate	**2373081**	[o] 23730 17.3	10/09→
				98041300	L990		Ate	**2445801**	[o] 24458 17.1	→10/09
			Ate	**82062900**				**98035200**	L1006	→04/10
			Ate	**82074600**				**98043600**	L1047	04/10→
				92161003	ø 365 x 36 x 62		Ate	**82062900**		
				TPM0003			Ate	**82072700**		
								92161203	ø 345 x 24 x 78	10/09→
								TPM0003		
								91058700	ø 185 x 30	
								97032200		
108700			Ate	**2443601**	[o] 24436 19.9		Ate	**2373001**	[o] 23730 17.3	2009-10→
xDrive 50 i	08/09→	330 / 449		**98041300**	L990	→2010-04	Ate	**2373081**	[o] 23730 17.3	2009-10→
				98044500	L1005	2010-04→	Ate	**2445801**	[o] 24458 17.1	→2009-10
				TPM0003				**98035200**	L1006	→2009-10
								98043600	L1047	2009-10→
							Ate	**82072700**		
								92161203	ø 345 x 24 x 78	2009-10→
								TPM0003		
								91058700	ø 185 x 30	
								97032200		

		30 kW / hp										
X6 (F16) 08/14→												
M 50 d	08/14→	108800 280 / 381	Ate		2443601	[o] 24436 19.9		Ate		2373001	[o] 23730 17.3	
					98044500	L1005	left 04/10→	Ate	epad	2373081	[o] 23730 17.3	
					TPM0003					98043600	L1047	04/10→
								Ate		82072700		
									PRO	92161203	ø 345 x 24 x 78	
										TPM0003		
										91058700	ø 185 x 30	
										97032200		
xDrive 30 d	08/14→	108900 155 / 211	Ate		2417001	[o] 24170 19.7		Ate		2344704	[o] 23447 17.3	
			Ate	epad	2417081	[o] 24170 19.7				98043600	L1047	
					98044400	L985	left	Ate		82072700		
			Ate		82074600				PRO	92161103	ø 320 x 20 x 78.6	
				PRO	92160803	ø 332 x 30 x 62				TPM0003		
				PRO	92160903	ø 348 x 30 x 62				91058700	ø 185 x 30	
					TPM0003					97032200		
xDrive 30 d	08/14→	109000 190 / 258	Ate		2417001	[o] 24170 19.7		Ate		2344704	[o] 23447 17.3	
			Ate	epad	2417081	[o] 24170 19.7				98043600	L1047	
					98044400	L985	left	Ate		82072700		
			Ate		82074600				PRO	92161103	ø 320 x 20 x 78.6	⊖ CN
				PRO	92160803	ø 332 x 30 x 62	⊖ CN			TPM0003		
				PRO	92160903	ø 348 x 30 x 62				91058700	ø 185 x 30	
					TPM0003					97032200		
xDrive 50 i	08/14→	109100 330 / 450	Ate		2417201	[o] 24172 19.7	⊕ arm.veh.	Ate		2373001	[o] 23730 17.3	
			Ate		2443601	[o] 24436 19.9	⊖ arm.veh.	Ate	epad	2373081	[o] 23730 17.3	
					98043400	L1020	left ⊕ arm.veh.			98043600	L1047	04/10→
					98044500	L1005	⊖ arm.veh.	Ate		82072700		
			Ate		82074800		⊕ arm.veh.		PRO	92161203	ø 345 x 24 x 78	
				PRO	92161003	ø 365 x 36 x 62	⊕ arm.veh.			TPM0003		
					TPM0003					91058700	ø 185 x 30	
										97032200		
Z3 (E36) 10/95→01/03												
1.9	10/95→03/99	109200 103 / 140	Ate		2328702	[o] 23287 17.8		Ate		2160702	[o] 21607 17.3	
1.9	07/98→01/03	87 / 118	Ate	epad	2328781	[o] 23287 17.8		Ate	epad	2160781	[o] 21607 17.3	
1.9	01/99→01/03	85 / 116			98013300	L776				98020800	L840	
			Ate		82039300			Ate		82028700		
			Ate		82062900			Ate		82062900		
				PRO	92055503	ø 286 x 12 x 51.7			PRO	92076703	ø 272 x 10 x 83	
					TPM0003					TPM0003		
										91045500	ø 160.5 x 25	
										97008100		

BMW

BMW

		kW / hp											
Z3 (E36) 10/95→01/03													
		109300	Ate		2328702	[o] 23287 17.8		Ate		2160702	[o] 21607 17.3	
2.0	04/99→01/03	110 / 150										
2.2	08/00→01/03	125 / 170	Ate	epad	2328781	[o] 23287 17.8		Ate	epad	2160781	[o] 21607 17.3	
2.8	01/96→07/00	143 / 194										
2.8	04/97→06/00	141 / 192			98013300	L776				98020800	L840	
			Ate		82039300			Ate		82028700		
			Ate		82062900			Ate		82062900		
				PRO	92055603	ø 286 x 22 x 51.7			PRO	92076703	ø 272 x 10 x 83	
				PRO	92055605	ø 286 x 22 x 51.7				TPM0003		
					TPM0003					91045500	ø 160.5 x 25	
										97008100		
		109400	Ate		2328702	[o] 23287 17.8		Ate		2160702	[o] 21607 17.3	
2.5	09/98→12/00	125 / 170										
2.5	09/00→12/02	137 / 186	Ate	epad	2328781	[o] 23287 17.8		Ate	epad	2160781	[o] 21607 17.3	
					98013300	L776				98020800	L840	
			Ate		82039300				PRO	92076703	ø 272 x 10 x 83	
				PRO	92055603	ø 286 x 22 x 51.7				TPM0003		
				PRO	92055605	ø 286 x 22 x 51.7				91045500	ø 160.5 x 25	
					TPM0003							
		109500	Ate		2328702	[o] 23287 17.8		Ate		2160702	[o] 21607 17.3	
3.0	06/00→12/02	168 / 228										
			Ate	epad	2328781	[o] 23287 17.8		Ate	epad	2160781	[o] 21607 17.3	
					98013300	L776				98020800	L840	
			Ate		82039300				PRO	92076703	ø 272 x 10 x 83	
				PRO	92097203	ø 300 x 22 x 51.5				TPM0003		
				PRO	92097205	ø 300 x 22 x 51.5				91045500	ø 160.5 x 25	
					TPM0003							
		109600	Ate		2328702	[o] 23287 17.8		Ate		2160702	[o] 21607 17.3	
3.0	06/00→01/03	170 / 231										
			Ate	epad	2328781	[o] 23287 17.8		Ate	epad	2160781	[o] 21607 17.3	
					98013300	L776				98020800	L840	
			Ate		82039300			Ate		82028700		
			Ate		82062900			Ate		82062900		
				PRO	92097203	ø 300 x 22 x 51.5			PRO	92076703	ø 272 x 10 x 83	
				PRO	92097205	ø 300 x 22 x 51.5				TPM0003		
					TPM0003					91045500	ø 160.5 x 25	
										97008100		
		109700	Ate		2096801	[o] 20968 20.3		Ate		2099501	[o] 20995 17.3	
3.2	09/97→12/00	179 / 243										
3.2	09/00→12/02	235 / 320			98019500	L810				98020800	L840	
					92071100	ø 315 x 28 x 52.5	left		PRO	92098703	ø 312 x 20 x 61	left
					92071200	ø 315 x 28 x 52.5	right		PRO	92098803	ø 312 x 20 x 61	right
				PRO	92071103	ø 315 x 28 x 52.5	left			TPM0003		
				PRO	92071203	ø 315 x 28 x 52.5	right			91033400	ø 180 x 25	
					TPM0003					97003100		
		109800	Ate		2347402	[o] 23474 20.3		Ate		2099501	[o] 20995 17.3	
M 3.2	03/97→06/01	236 / 321										
M 3.2	04/00→04/01	252 / 343										

→

		30 kW / hp									
Z3 (E36) 10/95→01/03											
M 3.2	06/01→01/03	239 / 325		98019500	L810			98020800	L840	
			Ate	82029200			Ate	82028700		
			Ate	82062900			Ate	82062900		
				92071100	ø 315 x 28 x 52.5	left		92098703	ø 312 x 20 x 61	left
				92071200	ø 315 x 28 x 52.5	right		92098803	ø 312 x 20 x 61	right
				92071103	ø 315 x 28 x 52.5	left		TPM0003		
				92071203	ø 315 x 28 x 52.5	right		91033400	ø 180 x 25	
				TPM0003				97008100		
Z3 Coupe (E36) 07/97→06/03										
		109900	Ate	2328702	[o] 23287 17.8		Ate	2160702	[o] 21607 17.3	
2.8	07/97→06/00	141 / 192	Ate	2328781	[o] 23287 17.8		Ate	2160781	[o] 21607 17.3	
				98013300	L776			98020800	L840	
			Ate	82039300			Ate	82028700		
			Ate	82062900			Ate	82062900		
				92055603	ø 286 x 22 x 51.7			92076703	ø 272 x 10 x 83	
				92055605	ø 286 x 22 x 51.7			TPM0003		
				TPM0003				91045500	ø 160.5 x 25	
								97008100		
		110000	Ate	2328702	[o] 23287 17.8		Ate	2160702	[o] 21607 17.3	
3.0	06/00→06/03	170 / 231	Ate	2328781	[o] 23287 17.8		Ate	2160781	[o] 21607 17.3	
				98013300	L776			98020800	L840	
			Ate	82039300			Ate	82028700		
			Ate	82062900			Ate	82062900		
				92097203	ø 300 x 22 x 51.5			92076703	ø 272 x 10 x 83	
				92097205	ø 300 x 22 x 51.5			TPM0003		
				TPM0003				91045500	ø 160.5 x 25	
								97008100		
		110100	Ate	2096801	[o] 20968 20.3		Ate	2099501	[o] 20995 17.3	
3.2	09/98→12/00	179 / 243								
3.2	09/00→12/02	235 / 320		98019500	L810			98020800	L840	
				92071100	ø 315 x 28 x 52.5	left		92098703	ø 312 x 20 x 61	left
				92071200	ø 315 x 28 x 52.5	right		92098803	ø 312 x 20 x 61	right
				92071103	ø 315 x 28 x 52.5	left		TPM0003		
				92071203	ø 315 x 28 x 52.5	right		91033400	ø 180 x 25	
				TPM0003				97003100		
		110200	Ate	2347402	[o] 23474 20.3		Ate	2099501	[o] 20995 17.3	
M	02/98→06/01	236 / 321								
M	08/00→06/03	252 / 343		98019500	L810			98020800	L840	
M	06/01→06/03	239 / 325	Ate	82029200			Ate	82028700		
			Ate	82062900			Ate	82062900		
				92071100	ø 315 x 28 x 52.5	left		92098703	ø 312 x 20 x 61	left
				92071200	ø 315 x 28 x 52.5	right		92098803	ø 312 x 20 x 61	right

BMW

BMW

		kW / hp									
Z3 Coupe (E36) 07/97→06/03											
110200				92071103	ø 315 x 28 x 52.5	left		TPM0003		
M	02/98→06/01	236 / 321		92071203	ø 315 x 28 x 52.5	right		91033400	ø 180 x 25	
M	08/00→06/03	252 / 343		TPM0003				97008100		
M	06/01→06/03	239 / 325								
Z4 (E85) 09/02→12/08											
110300			Ate	2328702	[o] 23287 17.8		Ate	2193402	[o] 21934 17.3	
2.0 i	04/05→	110 / 150	Ate	2328781	[o] 23287 17.8		Ate	2193481	[o] 21934 17.3	
2.2 i	10/03→	125 / 170		98023900	L596			98029900	L1220	
2.5 i	02/03→	141 / 192	Ate	82039300			Ate	82028700		
2.5 i	01/06→	130 / 177	Ate	82062900			Ate	82062900		
				92055603	ø 286 x 22 x 51.7			92146003	ø 280 x 10 x 75.2	
				92055605	ø 286 x 22 x 51.7			TPM0003		
				TPM0003				91053300	ø 160.5 x 20	
								97008100		
110400			Ate	2328702	[o] 23287 17.8		Ate	2193402	[o] 21934 17.3	
2.5 i	09/02→12/05	137 / 186	Ate	2328781	[o] 23287 17.8		Ate	2193481	[o] 21934 17.3	
				98023900	L596			98029900	L1220	
			Ate	82039300			Ate	82028700		
				92055603	ø 286 x 22 x 51.7			92146003	ø 280 x 10 x 75.2	
				92055605	ø 286 x 22 x 51.7			TPM0003		
				TPM0003				91053300	ø 160.5 x 20	
								97012600		
110500			Ate	2328702	[o] 23287 17.8		Ate	2193402	[o] 21934 17.3	
2.5 si	01/06→	160 / 218	Ate	2328781	[o] 23287 17.8		Ate	2193481	[o] 21934 17.3	
3.0 i	02/03→	170 / 231		98023900	L596			98029900	L1220	
			Ate	82039300			Ate	82028700		
			Ate	82062900			Ate	82062900		
				92097203	ø 300 x 22 x 51.5			92146103	ø 294 x 19 x 74.5	
				92097205	ø 300 x 22 x 51.5			TPM0003		
				TPM0003				91053300	ø 160.5 x 20	
								97008100		
110600			Ate	2328702	[o] 23287 17.8		Ate	2193402	[o] 21934 17.3	
3.0 i	09/02→12/05	168 / 228	Ate	2328781	[o] 23287 17.8		Ate	2193481	[o] 21934 17.3	
				98023900	L596			98029900	L1220	
			Ate	82039300			Ate	82028700		
				92097203	ø 300 x 22 x 51.5			TPM0003		
				92097205	ø 300 x 22 x 51.5			91053300	ø 160.5 x 20	
				TPM0003				97012600		
110700			Ate	2318302	[o] 23183 20.3		Ate	2193402	[o] 21934 17.3	
3.0 si	09/05→12/08	160 / 218	Ate	2318381	[o] 23183 20.3		Ate	2193481	[o] 21934 17.3	
				98035300	L612			98029900	L1220	

→

Z4 (E85) 09/02→12/08

3.0 si	09/05→12/08	110700 160 / 218	Ate		82028600			Ate		82028700		
					92106900	ø 325 x 25 x 52.5			PRO	92146103	ø 294 x 19 x 74.5	
				PRO	92106903	ø 325 x 25 x 52.5				TPM0003		
				PRO	92106905	ø 325 x 25 x 52.5				91053300	ø 160.5 x 20	
					TPM0003					97012600		
3.0 si	01/06→	110800 195 / 265	Ate		2318302	[o] 23183 20.3		Ate		2193402	[o] 21934 17.3	
3.0 si	09/08→12/09	172 / 230	Ate	epad	2318381	[o] 23183 20.3		Ate	epad	2193481	[o] 21934 17.3	
					98035300	L612				98029900	L1220	
			Ate		82028600			Ate		82028700		
			Ate		82062900			Ate		82062900		
					92106900	ø 325 x 25 x 52.5			PRO	92146103	ø 294 x 19 x 74.5	
				PRO	92106903	ø 325 x 25 x 52.5				TPM0003		
				PRO	92106905	ø 325 x 25 x 52.5				91053300	ø 160.5 x 20	
					TPM0003					97008100		
M	03/06→	110900 252 / 343	Ate		2347402	[o] 23474 20.3		Ate		2148701	[o] 21487 17.2	
					98035300	L612		Ate	epad	2148781	[o] 21487 17.2	
			Ate		82028600					98035400	L1160	
			Ate		82062900			Ate		82057500		
					TPM0003			Ate		82062900		
										TPM0003		
										91058700	ø 185 x 30	
										97032200		

Z4 (E89) 05/09→

sDrive 18 i	04/13→	111000 115 / 156	Ate		2379401	[o] 23794 20.3		Luc		2455901	[o] 24559 18	
			Ate	epad	2379481	[o] 23794 20.3				98044200	L1360	
					98046800	L1015				TPM0003		
			Ate		82062900							
			Ate		82074500							
				PRO	92137703	ø 300 x 24 x 73.5						
					TPM0003							
sDrive 20 i	09/11→	111100 135 / 184	Ate		2379401	[o] 23794 20.3		Luc		2455901	[o] 24559 18	
			Ate	epad	2379481	[o] 23794 20.3				98044200	L1360	
			Ate		82062900			Luc		82518900		
			Ate		82074500					TPM0003		
				PRO	92137703	ø 300 x 24 x 73.5						
					TPM0003							
sDrive 23 i	05/09→	111200 150 / 204	Ate		2379401	[o] 23794 20.3		Luc		2455901	[o] 24559 18	⊖ USA
			Ate	epad	2379481	[o] 23794 20.3		Luc		2455902	[o] 24559 18	⊕ USA
					98042600	L980	→03/10			98042700	L1350	
					98046800	L1015	03/10→	Luc		82518900		

BMW

BMW

		kW / hp									
Z4 (E89) 05/09→											
111200			Ate		**82062900**					**TPM0003**	
sDrive 23 i	05/09→	150 / 204	Ate		**82074500**						
				PRO	**92137703**	ø 300 x 24 x 73.5					
					TPM0003						
111300			Ate		**2379401**	[o] 23794 20.3		Luc		**2455901**	[o] 24559 18
sDrive 28 i	09/11→	180 / 245	Ate	epad	**2379481**	[o] 23794 20.3				**98044200**	L1360
					98046800	L1015		Luc		**82518900**	
			Ate		**82062900**					**TPM0003**	
			Ate		**82074500**						
				PRO	**92137703**	ø 300 x 24 x 73.5					
					TPM0003						
111400			Ate		**2379401**	[o] 23794 20.3		Luc		**2455901**	[o] 24559 18
sDrive 30 i	05/09→	190 / 258	Ate	epad	**2379481**	[o] 23794 20.3				**98042700**	L1350
					98042600	L980	→03/10	Luc		**82518900**	
					98046800	L1015	03/10→			**TPM0003**	
			Ate		**82062900**						
			Ate		**82074500**						
					TPM0003						
111500			Ate		**2379401**	[o] 23794 20.3	→2010-10	Luc		**2455901**	[o] 24559 18
sDrive 30 i	05/09→12/11	171 / 233									2010-10→
sDrive 30 i	09/09→	171 / 233	Ate	epad	**2379481**	[o] 23794 20.3	→2010-10	Luc		**2455901**	[o] 24559 18 →2010-11
					98042600	L980	→2010-03			**98042700**	L1350 →2010-03
					98046800	L1015	2010-03→			**98044200**	L1360 2010-03→
			Ate		**82074500**					**TPM0003**	
					TPM0003						
111600			Ate		**2331303**	[–] 23313 20.3		Luc		**2455902**	[o] 24559 18 ⊕ USA
sDrive 35 i	05/09→	225 / 306	Ate	epad	**2331382**	[o] 23313 20.3		TRW		**2456101**	[o] 24561 18 ⊖ USA
					98042600	L980	→03/10	TRW	epad	**2456181**	[o] 24561 18 ⊖ USA
					98046800	L1015	03/10→			**98042700**	L1350
			Ate		**82062900**			Luc		**82518900**	
			Ate		**82072000**					**TPM0003**	
					TPM0003						
111700			Ate		**2331303**	[–] 23313 20.3		TRW		**2456101**	[o] 24561 18
sDrive 35 is	09/09→	264 / 359	Ate	epad	**2331382**	[o] 23313 20.3		TRW	epad	**2456181**	[o] 24561 18
					98042600	L980	→03/10			**98042700**	L1350 →03/10
					98046800	L1015	03/10→			**98044200**	L1360 03/10→
			Ate		**82072000**					**TPM0003**	
					TPM0003						
111800			Ate		**2331303**	[–] 23313 20.3		TRW		**2456101**	[o] 24561 18
sDrive 35 is	09/10→	250 / 340	Ate	epad	**2331382**	[o] 23313 20.3		TRW	epad	**2456181**	[o] 24561 18
					98046800	L1015				**98044200**	L1360

→

kW / hp									
Z4 (E89) 05/09→									
111800									
sDrive 35 is 09/10→ 250 / 340	Ate	82062900			Luc	82518900			
	Ate	82072000				TPM0003			
		TPM0003							
Z4 Coupe (E86) 09/05→12/07									
111900									
3.0 si 09/05→12/07 160 / 218	Ate	2318302	[o] 23183 20.3		Ate	2193402	[o] 21934 17.3		
	Ate epad	2318381	[o] 23183 20.3		Ate epad	2193481	[o] 21934 17.3		
		98035300	L612			98029900	L1220		
	Ate	82028600			Ate	82028700			
		92106900	ø 325 x 25 x 52.5		PRO	92146103	ø 294 x 19 x 74.5		
	PRO	92106903	ø 325 x 25 x 52.5			TPM0003			
	PRO	92106905	ø 325 x 25 x 52.5			91053300	ø 160.5 x 20		
		TPM0003				97012600			
112000									
3.0 si 03/06→ 195 / 265	Ate	2318302	[o] 23183 20.3		Ate	2193402	[o] 21934 17.3		
	Ate epad	2318381	[o] 23183 20.3		Ate epad	2193481	[o] 21934 17.3		
		98035300	L612			98029900	L1220		
	Ate	82028600			Ate	82028700			
	Ate	82062900			Ate	82062900			
		92106900	ø 325 x 25 x 52.5		PRO	92146103	ø 294 x 19 x 74.5		
	PRO	92106903	ø 325 x 25 x 52.5			TPM0003			
	PRO	92106905	ø 325 x 25 x 52.5			91053300	ø 160.5 x 20		
		TPM0003				97008100			
112100									
M 03/06→ 252 / 343	Ate	2347402	[o] 23474 20.3		Ate	2148701	[o] 21487 17.2		
		98035300	L612		Ate epad	2148781	[o] 21487 17.2		
	Ate	82028600				98035400	L1160		
	Ate	82062900			Ate	82057500			
		TPM0003			Ate	82062900			
						TPM0003			
						91058700	ø 185 x 30		
						97032200			
Z8 (E52) 06/00→12/03									
112200									
4.8 09/02→12/03 279 / 379	Ate	2148401	[o] 21484 20.8		Ate	2148701	[o] 21487 17.2		
4.9 06/00→06/03 294 / 400		98027000	L760		Ate epad	2148781	[o] 21487 17.2		
	Ate	82030500				98020700	L545		
	Ate	82062900			Ate	82057500			
		TPM0003			Ate	82062900			
						92074900	ø 328 x 20 x 61		
						TPM0003			
						91033400	ø 180 x 25		

BMW (BRILLIANCE) BMW (BRILLIANCE)

30 kW / hp

3 SERIES (E46) 07/03→06/05

318 i	06/04→06/05	112300 105 / 143	Ate	2328702	[o] 23287 17.8		Ate	2193402	[o] 21934 17.3	
			Ate	2328781	[o] 23287 17.8		Ate	2193481	[o] 21934 17.3	
								92072403	ø 276 x 19 x 60.1	
325 i	07/03→06/05	112400 141 / 192	Ate	2328702	[o] 23287 17.8		Ate	2193402	[o] 21934 17.3	
			Ate	2328781	[o] 23287 17.8		Ate	2193481	[o] 21934 17.3	
				92097203	ø 300 x 22 x 51.5			92097303	ø 294 x 19 x 59.2	
				92097205	ø 300 x 22 x 51.5					

3 SERIES (E90) 01/05→12/07

320 i	01/05→12/07	112500 110 / 150	Ate	2379401	[o] 23794 20.3		Luc	2362303	[o] 23623 17.4	
			Ate	2379481	[o] 23794 20.3		Luc	2362381	[o] 23623 17.4	
			Ate	2393501	[o] 23935 17.8		Ate	2392701	[o] 23927 17.3	
			Ate	2393581	[o] 23935 17.8		Ate	2392781	[o] 23927 17.3	
				92132803	ø 292 x 22 x 73			92137903	ø 336 x 22 x 67	
				92132805	ø 292 x 22 x 73			92154903	ø 300 x 20 x 66	
				92137703	ø 300 x 24 x 73.5			TPM0003		
				92176103	ø 312 x 24 x 73.5					
				TPM0003						

5 SERIES (E60) 04/04→02/06

525 i	04/04→02/06	112600 141 / 192	Ate	2331211	[o] 23312 20.3		Ate	2373201	[o] 23732 17.3	
			Ate	2331282	[o] 23312 20.3		Ate	2373281	[o] 23732 17.3	
			Ate	2379401	[o] 23794 20.3					
			Ate	2379481	[o] 23794 20.3					
				92122503	ø 310 x 24 x 77					
				92122505	ø 310 x 24 x 77					

BUGATTI BUGATTI

30 kW / hp

VEYRON EB 16.4 10/03→12/12

8.0 W16 8.0 W16 Super Sport	10/03→12/12 07/10→12/12	112700 736 / 1001 882 / 1200	AP	2411601	[–] 24116 16.3		AP	2412001	[–] 24120 16.3	

VEYRON Grand Sport EB 16.4 03/09→

8.0 W16 8.0 W16 Super Sport	03/09→ 07/10→	112800 736 / 1001 882 / 1200	AP	2411601	[–] 24116 16.3		AP	2412001	[–] 24120 16.3	

BUICK BUICK

30 kW / hp

LA CROSSE Saloon 02/06→12/09

3.0	02/06→12/09	112900 131 / 178						2485901	[+] 24859 13.9	

LA CROSSE Saloon 01/10→

3.0 3.6 VVTi	01/12→ 01/10→	113000 226 / 307 209 / 284	Man	2441201	[+] 24412 19.1	17" -brake	TRW	2442101	[+] 24421 17.3	16" -brake
			Man	2441501	[+] 24415 19.1	16" -brake				
				92187003	ø 321 x 30 x 50.9	17" -brake				

LA CROSSE Stufenheck 02/06→12/09 → LA CROSSE Saloon, Page 224

LA CROSSE Stufenheck 01/10→ → LA CROSSE Saloon, Page 224

BUICK

BUICK

		kW / hp											
REGAL (4WF_) 10/97→10/04													
		113100	Wag		2335801	[+] 23358 18			Ake		2336101	[+] 23361 15	
3.8	10/97→10/04	153 / 208											
3.8	10/02→09/04	149 / 203			92091500	ø 278 x 32 x 52					92099800	ø 278 x 11 x 50.5	

BYD

BYD

		kW / hp											
F0 Hatchback 09/08→													
		113200								PRO	92132503	ø 302 x 12 x 49.2	
1.0	09/08→	50 / 68											
F0 Schrägheck 09/08→ → F0 Hatchback, Page 225													
F3 09/05→													
		113300	Ake		2390401	[+] 23904 16.6				PRO	92126203	ø 269 x 9 x 56	
1.5	11/09→	79 / 107											
		113400	Ake		2390401	[+] 23904 16.6			Ake		2359201	[–] 23592 15	
1.6	09/05→12/10	74 / 99											
DM 1.0	01/09→	50 / 68								PRO	92126203	ø 269 x 9 x 56	
F3R Hatchback 04/07→													
		113500	Ake		2390401	[+] 23904 16.6			Ake		2359201	[–] 23592 15	
1.5	04/07→08/09	78 / 106											
1.6	09/07→	74 / 99								PRO	92126203	ø 269 x 9 x 56	
F3R Schrägheck 04/07→ → F3R Hatchback, Page 225													
F6 03/08→													
		113600		PRO	92144403	ø 282 x 23 x 47.2			Nis		2443501	[+] 24435 14.8	
2.0	03/08→	103 / 140											

CADILLAC

CADILLAC

		kW / hp											
ATS 02/13→													
		113700	Bre		2332501	[+] 23325 15	⊕ reinf.brake ⊖ perform. brk. sys. →MY 2013						
2.0	02/13→	203 / 276											
2.0 AWD	02/13→	203 / 276	Bre		2332502	[+] 23325 16	⊕ reinf.brake ⊕ perform. brk. sys.						
2.5 petrol 2WD	02/13→	151											
3.6 VVT petrol 2WD	02/13→	239			2503401	[+] 25034 18.8	⊖ reinf.brake ⊖ perform. brk. sys.						
3.6 VVT petrol 4WD	02/13→	239											
				epad	2503481	[+] 25034 18.8	⊖ reinf.brake ⊖ perform. brk. sys.						
BLS 04/06→													
		113800	Ate		2340404	[o] 23404 20.4	16" -brake		Ate		2413701	[–] 24137 16.7	
1.9 D	04/06→	110 / 150											
1.9 D	12/07→	132 / 180	Ate		2373807	[o] 23738 20.6	15" -brake		Ate	epad	2413781	[–] 24137 16.7	
2.0 T	04/06→	129 / 175											
2.0 T	04/06→	154 / 210											
2.0 T AWD	04/06→	154 / 210			98029100	L685			Ate		82062900		
2.0 T Flexpower	12/07→	147 / 200											
2.8 T	04/06→	188 / 255	Ate		82029300				Ate		82503500		
			Ate		82062900					PRO	92118403	ø 292 x 20 x 41.5	
				PRO	92118303	ø 302 x 28 x 45	16" -brake						
				PRO	92118703	ø 285 x 25 x 41.9	15" -brake						
		113900	Ate		2022401	[o] 20224 20.9			Ate		2413701	[–] 24137 16.7	
2.8 T AWD	10/08→	206 / 280	Ate		82062900				Ate	epad	2413781	[–] 24137 16.7	
				PRO	92118803	ø 314 x 28 x 44.9			Ate		82062900		
									Ate		82503500		
										PRO	92118403	ø 292 x 20 x 41.5	
BLS Wagon 12/07→													
		114000	Ate		2340404	[o] 23404 20.4	16" -brake		Ate		2413701	[–] 24137 16.7	
1.9 D	12/07→	110 / 150											
1.9 D	12/07→	132 / 180	Ate		2373807	[o] 23738 20.6	15" -brake		Ate	epad	2413781	[–] 24137 16.7	
2.0 T	12/07→	129 / 175											
2.0 T	12/07→	154 / 210											
2.0 T AWD	12/07→	154 / 210			98029100	L685			Ate		82062900		
2.0 T Flexpower	12/07→	147 / 200											
2.8 T	12/07→	188 / 255											

CADILLAC

CADILLAC

		kW / hp											
BLS Wagon 12/07→													
		114000	Ate		82029300			Ate		82503500			
1.9 D	12/07→	110 / 150											
1.9 D	12/07→	132 / 180	Ate		82062900				PRO	92118403	ø 292 x 20 x 41.5	
2.0 T	12/07→	129 / 175											
2.0 T	12/07→	154 / 210		PRO	92118303	ø 302 x 28 x 45	16" -brake						
2.0 T AWD	12/07→	154 / 210											
2.0 T Flexpower	12/07→	147 / 200		PRO	92118703	ø 285 x 25 x 41.9	15" -brake						
2.8 T	12/07→	188 / 255											
		114100	Ate		2022401	[o] 20224 20.9		Ate		2413701	[–] 24137 16.7		
2.8 T	08/10→	206 / 280		PRO	92118803	ø 314 x 28 x 44.9		Ate	epad	2413781	[–] 24137 16.7		
									PRO	92118403	ø 292 x 20 x 41.5		
		114200	Ate		2022401	[o] 20224 20.9		Ate		2413701	[–] 24137 16.7		
2.8 T AWD	10/08→	206 / 280	Ate		82062900			Ate	epad	2413781	[–] 24137 16.7		
				PRO	92118803	ø 314 x 28 x 44.9		Ate		82062900			
								Ate		82503500			
									PRO	92118403	ø 292 x 20 x 41.5		
CTS 03/02→09/07													
		114300	Wag		2430301	[–] 24303 14.1	⊖ perform. brk. sys.	Wag		2430401	[+] 24304 15.4	→05/05	
2.6	03/02→09/07	136 / 185											
2.6	04/03→09/07	133 / 181			92261100	ø 323 x 32.2 x 52	⊕ perform. brk. sys.						
2.8	03/05→09/07	158 / 215											
3.2	03/02→09/07	160 / 218											
3.6	03/05→09/07	189 / 257											
		114400	Bre		2332501	[+] 23325 15		Bre		2314301	[+] 23143 14.3		
5.7 V8	03/05→09/07	294 / 400											
CTS 01/08→													
		114500	Man		2493701	[+] 24937 16	⊖ reinf.brake	Man		2454601	[+] 24546 17.2		
2.8	01/08→	155 / 211											
3.0	01/08→	203 / 276	Man		2494001	[+] 24940 17.2	⊕ reinf.brake						
3.0 AWD	01/08→	203 / 276											
3.6	01/08→	229 / 311											
3.6	01/10→	199 / 271											
3.6	09/11→	237 / 322											
3.6 AWD	01/08→	229 / 311											
3.6 AWD	01/10→	199 / 271											
3.6 AWD	09/11→	237 / 322											
		114600	Man		2493701	[+] 24937 16	JE5 -brake	Man		2454601	[+] 24546 17.2	J55 -brake	
3.6	01/08→12/10	196 / 266											
3.6 VVTi	01/08→	227 / 309	Man		2494001	[+] 24940 17.2	J55 -brake						
3.6 VVTi	03/08→	224 / 305											
3.6 VVTi AWD	03/08→12/10	227 / 309											
6.2	03/08→	409 / 556											
		114700	Bre		2332501	[+] 23325 15		Bre		2314301	[+] 23143 14.3		
6.0 V8	01/09→												
		114800						Bre		2314301	[+] 23143 14.3		
6.2	01/09→	415 / 564											
CTS 09/13→													
		114900	Bre		2332502	[+] 23325 16	J55 -brake						
2.0 Turbo	09/13→	203 / 276											
2.0 Turbo AWD	01/14→	203 / 276											
CTS Coupe 01/08→													
		115000	Man		2493701	[+] 24937 16	⊖ reinf.brake	Man		2454601	[+] 24546 17.2		
3.6	01/08→	229 / 311											
3.6	09/11→	237 / 322	Man		2494001	[+] 24940 17.2	⊕ reinf.brake						
3.6 AWD	01/08→	229 / 311											
3.6 AWD	09/11→	237 / 322											
		115100						Bre		2314301	[+] 23143 14.3		
6.2	01/08→	415 / 564											
CTS Sport Wagon 01/08→													
		115200	Man		2493701	[+] 24937 16	⊖ reinf.brake	Man		2454601	[+] 24546 17.2		
3.0	01/08→	203 / 276											
3.0 AWD	01/08→	203 / 276	Man		2494001	[+] 24940 17.2	⊕ reinf.brake						
3.6	01/08→	229 / 311											
3.6	09/11→	237 / 322											
3.6 AWD	01/08→	229 / 311											
3.6 AWD	09/11→	237 / 322											
SEVILLE 09/97→09/04													
		115300	Wag		2461501	[+] 24615 16.9	⊖ reinf.brake MY 2000→	Ake		2427901	[+] 24279 14.5	→09/02 ⊕ rear disc brake ⊖ reinf.brake ⊕ EU	
4.6	10/00→09/04	220 / 299											
4.6 SLS V8	09/97→09/04	205 / 279											
4.6 STS V8	09/97→09/04	224 / 305											
SEVILLE Saloon 09/97→09/04 → SEVILLE, Page 226													
SEVILLE Stufenheck 09/97→09/04 → SEVILLE, Page 226													
SRX 01/04→12/08													
		115400	Wag		2426801	[+] 24268 15							
3.6	07/04→12/08	190 / 258											
3.6 Rear Wheel Drive	01/04→12/08	190 / 258											

→

CADILLAC

CADILLAC

		kW / hp											
SRX 01/04→12/08													
4.6	07/04→12/08	239 / 325	Wag		**2426801**	[+] 24268 15							
4.6 Rear Wheel Drive	01/04→12/08	240 / 326											
SRX 01/09→													
		115500			**2475001**	[+] 24750 16.7	⊕ perform. brk. sys.	Man		**2454601**	[+] 24546 17.2		
2.8	01/09→	224 / 305											
2.8 AWD	01/09→	224 / 305											
3.0	01/09→	198 / 269											
3.0 AWD	01/09→	198 / 269											
3.0 AWD	01/09→	199 / 270											
3.6	01/12→	230 / 313											
3.6 AWD	01/12→	230 / 313											
3.6 AWD	10/12→	234 / 318											
		115600	Wag		**2426801**	[+] 24268 15	⊖ perform. brk. sys.						
3.0 AWD	10/09→	195 / 265											
STS 09/04→													
		115700	Bre		**2332501**	[+] 23325 15	J56 -brake	Bre		**2314301**	[+] 23143 14.3	J56 -brake	
3.6	05/05→	189 / 257											
3.6 VVT AWD	01/05→	225 / 306			**92261100**	ø 323 x 32.2 x 52	JE5 -brake	Wag		**2426601**	[+] 24266 16.4	JE5 -brake	
4.4 Kompressor	09/05→	350 / 476											
4.4 Kompressor AWD	09/05→	350 / 476											
4.6	05/05→	239 / 325											
4.6	09/07→12/10	235 / 320											
4.6 AWD	09/04→12/05	239 / 325											
		115800	Bre		**2332501**	[+] 23325 15	J56 -brake	Bre		**2314301**	[+] 23143 14.3	J56 -brake	
3.6	10/09→	229 / 311											
3.6 AWD	10/09→	229 / 311	Man		**2493701**	[+] 24937 16	JE5/JL9 -brake	Wag		**2426601**	[+] 24266 16.4	JE5 -brake	
XLR 03/04→09/09													
		115900	PBR		**2419401**	[+] 24194 15.3		PBR		**2419701**	[+] 24197 16.5		
4.4	03/04→09/09	331 / 450											
4.6	03/04→09/09	240 / 326											

CADILLAC (SGM)

CADILLAC (SGM)

		kW / hp											
SLS 12/06→12/09													
		116000	Wag		**2430301**	[–] 24303 14.1		Wag		**2430401**	[+] 24304 15.4		
3.6	12/06→12/09	194 / 260											

CARBODIES

CARBODIES

		kW / hp											
FX FAIRWAY 01/87→													
		116100	Lkh		**2116002**	[+] 21160 18	→09/02 Lockheed	Lkh		**97004000**		→09/02 Lucas	
2.7 TD	01/87→	63 / 86											
			Lkh		**2145902**	[+] 21459 18.5				**94032000**	ø 254 x 82.2		

CHERY

CHERY

		kW / hp											
A5 01/06→													
		116200						Ake		**2370201**	[–] 23702 15.8		
1.6	01/06→01/09	80 / 109											
2.0	01/06→	99 / 133											
A520 01/06→ → A5, Page 227													
EASTAR MPV Großraumlimousine 06/06→06/07 → V5 MPV, Page 227													
V5 Großraumlimousine 06/06→06/07 → V5 MPV, Page 227													
V5 MPV 06/06→06/07													
		116300						Ake		**2370201**	[–] 23702 15.8		
2.0	06/06→06/07	99 / 133											
2.4	06/06→06/07	95 / 129											

CHEVROLET

CHEVROLET

		kW / hp											
ALERO 03/99→09/04													
		116400			**2530401**	[+] 25304 14.2		Ake		**2336101**	[+] 23361 15		
2.2	12/01→09/04	104 / 141											
2.4 16V	03/99→09/04	104 / 141								**92099800**	ø 278 x 11 x 50.5		
3.4 V6	03/99→09/04	130 / 177											
ALERO Saloon 03/99→09/04 → ALERO, Page 227													
ALERO Stufenheck 03/99→09/04 → ALERO, Page 227													

CHEVROLET

CHEVROLET

		kW / hp												
ASTRA Estate 02/96→07/05														
		116500	Ate		**2306302**	[+] 23063	17.3		Bos		**2325803**	[+] 23258	16.9	Bosch
1.8 GLS	08/02→	81 / 110												
2.0	02/96→	85 / 116							Luc		**2341703**	[+] 23417	15.2	Lucas
2.0	10/99→07/02	94 / 128												
2.2	08/00→08/04	108 / 147												
		116600	Ate		**2306302**	[+] 23063	17.3		Bos		**2325803**	[+] 23258	16.9	Bosch
2.0	08/02→07/05	100 / 136							Luc		**2341703**	[+] 23417	15.2	Lucas
											91077400	ø 167 x 25		
ASTRA Hatchback 02/96→														
		116700	Ate		**2306302**	[+] 23063	17.3		Bos		**2325803**	[+] 23258	16.9	Bosch
2.0	02/96→	100 / 136							Luc		**2341703**	[+] 23417	15.2	Lucas
ASTRA Hatchback 09/98→														
		116800	Ate		**2306302**	[+] 23063	17.3		Bos		**2325803**	[+] 23258	16.9	Bosch
1.7 Di	08/00→08/03	55 / 75												
1.8	09/98→	81 / 110							Luc		**2341703**	[+] 23417	15.2	Lucas
1.8	08/02→06/05	92 / 125												
1.8	08/06→03/09	103 / 140												
2.0	03/99→07/02	94 / 128												
2.0	09/03→	84 / 114												
2.0 DTi	08/02→	74 / 101												
2.0 Flex	04/04→	89 / 121												
2.0 Flex	04/09→	103 / 140												
2.2	08/00→08/04	108 / 147												
2.4	08/05→	108 / 147												
		116900	Ate		**2306302**	[+] 23063	17.3		Bos		**2325803**	[+] 23258	16.9	Bosch
2.0	03/99→07/02	82 / 112												
2.0	08/02→	85 / 116							Luc		**2341703**	[+] 23417	15.2	Lucas
2.0	08/02→	100 / 136												
											91077400	ø 167 x 25		
ASTRA Kombi 02/96→07/05 → ASTRA Estate, Page 228														
ASTRA Saloon 03/99→12/11														
		117000	Ate		**2306302**	[+] 23063	17.3		Bos		**2325803**	[+] 23258	16.9	Bosch
1.8	03/99→12/11	81 / 110												
1.8	05/01→12/04	82 / 112							Luc		**2341703**	[+] 23417	15.2	Lucas
1.8	08/02→06/05	92 / 125												
1.8	08/06→03/09	103 / 140												
2.0	09/03→12/11	84 / 114												
2.0 DTi GLS	08/02→12/11	74 / 101												
2.0 Flex	04/04→12/11	89 / 121												
2.0 Flex	04/09→12/11	103 / 140												
2.0 GLS	03/99→07/02	94 / 128												
		117100	Ate		**2306302**	[+] 23063	17.3		Bos		**2325803**	[+] 23258	16.9	Bosch
2.0 GL	03/99→07/02	82 / 112												
2.0 GL	08/02→12/11	85 / 116							Luc		**2341703**	[+] 23417	15.2	Lucas
2.0 GLS	08/02→12/11	100 / 136												
											91077400	ø 167 x 25		
ASTRA Schrägheck 02/96→ → ASTRA Hatchback, Page 228														
ASTRA Schrägheck 09/98→ → ASTRA Hatchback, Page 228														
ASTRA Stufenheck 03/99→12/11 → ASTRA Saloon, Page 228														
AVEO Hatchback (T200) 01/05→05/08														
		117200	Ake		**2397401**	[–] 23974	17.8				**91062500**	ø 200 x 35		
1.5	01/05→05/08	62 / 84	Ake		**2397406**	[+] 23974	17.8				**97033700**			
			Ake		**82508400**						**94032100**	ø 200 x 40.5	⊕ ABS	
					92133400	ø 236 x 20 x 41								
AVEO Hatchback (T250, T255) 01/08→12/11														
		117300	Ake		**2397401**	[–] 23974	17.8				**91062500**	ø 200 x 35		
1.2	04/08→	55 / 75												
1.2	04/08→	62 / 84	Ake		**2397406**	[+] 23974	17.8				**97033700**			
1.2	10/08→	53 / 72												
1.2	10/08→	56 / 76												
1.2 LPG	04/08→	62 / 84	Ake		**82508400**									
1.4	04/08→	74 / 101												
1.6	01/08→	77 / 105			**92133400**	ø 236 x 20 x 41								
		117400	Ake		**2397406**	[+] 23974	17.8				**91062500**	ø 200 x 35		
1.6	09/09→12/11	81 / 110			**92133400**	ø 236 x 20 x 41								
AVEO Hatchback (T300) 03/11→														
		117500			**2503101**	[+] 25031	18.8	⊕ rim size 15"			**91062500**	ø 200 x 35	⊕ rim size 15"	
1.2	03/11→	51 / 69												
1.2	03/11→	63 / 86												

→

		kW / hp										
AVEO Hatchback (T300) 03/11→												
1.3 D	07/11→	55 / 75			**2503181**	[+] 25031 18.8	⊕ rim size 15"			**91079900**	ø 200 x 36	⊕ rim size 14"
1.3 D	07/11→	70 / 95										
1.4	03/11→	74 / 101			**92241400**	ø 256 x 24 x 45.5	⊕ rim size 14"					
1.6	03/11→	85 / 116		PRO	**92198903**	ø 276 x 26 x 45.5	⊕ rim size 15"					
		117600			**2503101**	[+] 25031 18.8	15" -brake			**91079900**	ø 200 x 36	14" -brake
1.2 LPG	11/12→	63 / 86										
1.4 Turbo	08/13→	103 / 140			**2503181**	[+] 25031 18.8	15" -brake			**91080200**	ø 229.8 x 41	15" -brake
1.6	06/11→	88 / 120										
1.6 Flex	06/12→	88 / 120			**92241400**	ø 256 x 24 x 45.5	14" -brake					
				PRO	**92198903**	ø 276 x 26 x 45.5	15" -brake					
		117700			**2503101**	[+] 25031 18.8	⊕ rim size 15"			**91079900**	ø 200 x 36	14" -brake
1.8	09/11→	101 / 137										
					2503181	[+] 25031 18.8	⊕ rim size 15"			**91080200**	ø 229.8 x 41	15" -brake
					92241400	ø 256 x 24 x 45.5	14" -brake					
				PRO	**92198903**	ø 276 x 26 x 45.5	15" -brake					
AVEO Saloon (T200) 05/03→01/07												
		117800	Ake		**2397401**	[–] 23974 17.8				**91062500**	ø 200 x 35	
1.4	05/03→01/07	69 / 94										
			Ake		**2397406**	[+] 23974 17.8				**94032100**	ø 200 x 40.5	⊕ ABS
					92133400	ø 236 x 20 x 41						
AVEO Saloon (T250, T255) 05/05→												
		117900	Ake		**2397401**	[–] 23974 17.8				**91062500**	ø 200 x 35	
1.2	03/06→12/07	53 / 72										
1.2	01/08→	55 / 75										
1.2	01/08→	56 / 76	Ake		**2397406**	[+] 23974 17.8				**97033700**		
1.2	01/08→	62 / 84										
1.2 LPG	01/09→	62 / 84	Ake		**82508400**							
1.4	03/06→12/07	69 / 94										
1.4	09/08→	74 / 101										
1.4 CNG	01/08→	69 / 94			**92133400**	ø 236 x 20 x 41						
1.5	05/05→	62 / 84										
1.6	05/05→	76 / 103										
1.6	01/06→	77 / 105										
1.6	01/08→	75 / 102										
		118000	Ake		**2397406**	[+] 23974 17.8				**91062500**	ø 200 x 35	
1.6	01/07→	81 / 110										
1.6 Flexfuel	05/05→	76 / 103										
1.6 Flexfuel	01/10→	77 / 105			**92133400**	ø 236 x 20 x 41						
AVEO Saloon (T300) 03/11→												
		118100			**2503101**	[+] 25031 18.8	⊕ rim size 15"			**91062500**	ø 200 x 35	⊕ rim size 15"
1.2	03/11→	51 / 69										
1.2	03/11→	63 / 86			**2503181**	[+] 25031 18.8	⊕ rim size 15"			**91079900**	ø 200 x 36	⊕ rim size 14"
1.3 D	07/11→	55 / 75										
1.3 D	07/11→	70 / 95										
1.4	07/11→	74 / 100			**92241400**	ø 256 x 24 x 45.5	⊕ rim size 14"					
1.6	03/11→	85 / 116		PRO	**92198903**	ø 276 x 26 x 45.5	⊕ rim size 15"					
		118200			**2503101**	[+] 25031 18.8	⊕ rim size 15"			**91079900**	ø 200 x 36	14" -brake
1.2 LPG	11/12→	63 / 86										
1.4	09/11→	103 / 140			**2503181**	[+] 25031 18.8	⊕ rim size 15"			**91080200**	ø 229.8 x 41	15" -brake
1.8	09/11→	101 / 137										
					92241400	ø 256 x 24 x 45.5	14" -brake					
				PRO	**92198903**	ø 276 x 26 x 45.5	15" -brake					
		118300			**2503101**	[+] 25031 18.8	15" -brake			**91079900**	ø 200 x 36	14" -brake
1.6	06/11→	88 / 120										
1.6 Flex	06/12→	88 / 120			**2503181**	[+] 25031 18.8	15" -brake			**91080200**	ø 229.8 x 41	15" -brake
					92241400	ø 256 x 24 x 45.5	14" -brake					
				PRO	**92198903**	ø 276 x 26 x 45.5	15" -brake					

AVEO Schrägheck (T200) 01/05→05/08 → AVEO Hatchback (T200), Page 228

AVEO Schrägheck (T250, T255) 01/08→12/11 → AVEO Hatchback (T250, T255), Page 228

AVEO Schrägheck (T300) 03/11→ → AVEO Hatchback (T300), Page 228

AVEO Stufenheck (T200) 05/03→01/07 → AVEO Saloon (T200), Page 229

AVEO Stufenheck (T250, T255) 05/05→ → AVEO Saloon (T250, T255), Page 229

AVEO Stufenheck (T300) 03/11→ → AVEO Saloon (T300), Page 229

CHEVROLET

CHEVROLET

		kW / hp													
BEAT (M300) 03/10→ → SPARK (M300), Page 240															
BLAZER S10 01/94→09/05															
		118400	Ake		2366301	[–] 23663	15.2		Ben		2367701	[+] 23677	15.5		
4.3 AWD	10/94→08/02	142 / 193													
		118500	Ake		2366301	[–] 23663	15.2		Ben		2367701	[+] 23677	15.5	01/97→	
4.3 V6 AWD	01/94→09/05	142 / 193													
CAMARO 07/98→12/02															
		118600	Ben		2366401	[+] 23664	14.9		Man		2397501	[+] 23975	16.8		
3.8	07/98→12/02	142 / 193													
3.8	09/01→12/02	145 / 197													
5.7	07/98→12/02	212 / 288													
CAMARO 09/09→															
		118700	Man		2441201	[+] 24412	19.1		Bre		2314301	[+] 23143	14.3		
3.6	09/09→	224 / 305													
3.6	09/09→	227 / 309		PRO	92187003	ø 321 x 30 x 50.9			Man		2454601	[+] 24546	17.2	Aluminium	
3.6	09/11→	241 / 328													
		118800	Man		2441201	[+] 24412	19.1		Bre		2314301	[+] 23143	14.3	MY 2013→	
3.6	01/11→	232 / 316		PRO	92187003	ø 321 x 30 x 50.9			Man		2454601	[+] 24546	17.2	→MY 2012	
		118900							Bre		2314301	[+] 23143	14.3		
6.2	09/09→	298 / 405													
6.2	09/09→	318 / 432													
CAMARO Cabriolet 10/97→12/02 → CAMARO Convertible, Page 230															
CAMARO Cabriolet 01/11→ → CAMARO Convertible, Page 230															
CAMARO Convertible 10/97→12/02															
		119000	Ben		2366401	[+] 23664	14.9		Man		2397501	[+] 23975	16.8		
3.8 V6	07/98→12/02	142 / 193													
5.7	10/97→08/01	212 / 288													
CAMARO Convertible 01/11→															
		119100	Man		2441201	[+] 24412	19.1		Bre		2314301	[+] 23143	14.3	MY 2013→	
3.6	01/11→	232 / 316		PRO	92187003	ø 321 x 30 x 50.9			Man		2454601	[+] 24546	17.2	→MY 2012	
		119200							Bre		2314301	[+] 23143	14.3		
6.2	01/11→	298 / 405													
6.2	01/11→	318 / 432													
CAPRICE Saloon 03/99→09/03															
		119300							Ake		2336101	[+] 23361	15		
3.8	03/99→09/03	94 / 128													
3.8	03/99→09/03	179 / 243													
CAPRICE Stufenheck 03/99→09/03 → CAPRICE Saloon, Page 230															
CAPTIVA (C100, C140) 06/06→															
		119400	Man		2451001	[+] 24510	16.9		Man		2449801	[+] 24498	15.4		
2.0 D	10/06→	93 / 126													
2.0 D	09/07→	110 / 150	Man		82077300				Man		82077200				
2.0 D 4WD	10/06→	93 / 126													
2.0 D 4WD	10/06→	110 / 150													
2.2 D	03/11→	120 / 163			92165400	ø 296 x 29 x 51.6					92165500	ø 303 x 20 x 71.7			
2.2 D 4WD	03/11→	120 / 163													
2.2 D 4WD	03/11→	135 / 184													
2.4	06/06→	100 / 136									91067100	ø 188.4 x 26			
2.4	03/11→	123 / 167													
2.4 4WD	06/06→	100 / 136									97038500				
2.4 4WD	03/11→	123 / 167													
2.4 LPG	01/07→	100 / 136													
2.4 LPG 4WD	01/07→	100 / 136													
3.0 4WD	01/10→	190 / 258													
3.2 4WD	06/06→	169 / 230													
3.6 4WD	01/08→	189 / 257													
		119500	Man		2451001	[+] 24510	16.9				92165500	ø 303 x 20 x 71.7			
2.2 D	01/13→	138 / 187													
2.2 D 4WD	01/13→	138 / 187			92165400	ø 296 x 29 x 51.6					91067100	ø 188.4 x 26			
		119600	Man		2451001	[+] 24510	16.9		Man		2449801	[+] 24498	15.4		
2.4	01/11→	124 / 169													
3.0	01/11→	197 / 268													
3.0 4WD	01/11→	194 / 264			92165400	ø 296 x 29 x 51.6					92165500	ø 303 x 20 x 71.7			
3.6	01/08→11/08	189 / 257													
											91067100	ø 188.4 x 26			
		119700	Man		2451001	[+] 24510	16.9		Man		2449801	[+] 24498	15.4		
2.4	01/11→	136 / 185													
2.4 Flex	01/11→	136 / 185													
3.0 AWD	01/11→	197 / 268			92165400	ø 296 x 29 x 51.6					92165500	ø 303 x 20 x 71.7			
3.6	01/08→	192 / 261													
3.6 4WD	01/08→	192 / 261													
CAPTIVA SPORT 12/09→															
		119800	Man		2451001	[+] 24510	16.9		Man		2449801	[+] 24498	15.4		
2.4	01/12→	134 / 182													
2.4 VVT	12/09→	126 / 171			92165400	ø 296 x 29 x 51.6					92165500	ø 303 x 20 x 71.7			
											91067100	ø 188.4 x 26			

→

		kW / hp											
CAPTIVA SPORT 12/09→													
		119900	Man		2451001	[+] 24510 16.9		Man		2449801	[+] 24498 15.4	
2.4	01/12→	136 / 185										
3.0	01/12→	197 / 268	Man		82077300			Man		82077200		
3.0 AWD	01/12→	197 / 268			92165400	ø 296 x 29 x 51.6				92165500	ø 303 x 20 x 71.7	
										91067100	ø 188.4 x 26	
										97038500		
CHEVY 12/95→07/06													
		120000	Ate		2054701	[o] 20547 16.8						
1.4	12/95→07/06	44 / 60										
1.4	09/00→07/06	45 / 61										
1.6	09/00→07/06	58 / 79										
CHEVY Estate 08/95→09/06													
		120100	Ate		2054701	[o] 20547 16.8						
1.6	08/95→07/02	72 / 98										
1.6	08/02→09/06	74 / 101										
CHEVY Kombi 08/95→09/06 → CHEVY Estate, Page 231													
CHEVY Saloon 08/95→													
		120200	Ate		2054701	[o] 20547 16.8						
1.6	08/95→07/02	72 / 98										
1.6	08/02→	74 / 101										
CHEVY Stufenheck 08/95→ → CHEVY Saloon, Page 231													
COBALT 01/14→													
		120300			92241400	ø 256 x 24 x 45.5				91079900	ø 200 x 36	
1.5	01/14→	77 / 105										
COLORADO 04/03→													
		120400	Ake		2437001	[+] 24370 16.1						
2.8	04/03→09/06	130 / 177										
2.8 AWD	04/03→09/06	130 / 177										
2.9	10/06→	139 / 189										
2.9 AWD	10/06→	139 / 189										
3.5	05/05→09/06	164 / 223										
3.5 AWD	05/05→09/06	164 / 223										
3.7	10/06→	181 / 246										
3.7 AWD	10/06→	181 / 246										
COLORADO Pickup 04/03→ → COLORADO, Page 231													
COLORADO Pick-up 04/03→ → COLORADO, Page 231													
COMBO 04/01→													
		120500	Ate		2054701	[o] 20547 16.8				91033200	ø 230 x 50	
1.6	04/01→	67 / 91										
1.7 D	04/01→	44 / 60	Ate		82030600			GM		97001200		
			Ate		82062900					84033200	bore ø 19 ø 230 x 50	
				PRO	92029603	ø 236 x 20 x 41				94003700	ø 230,0 x 58.8	
CORSA Estate 08/97→07/02													
		120600	Ate		2054701	[o] 20547 16.8				91044800	ø 200 x 28	
1.6 GLS	08/97→07/02	68 / 92										
1.7 D	08/00→07/02	44 / 60	Ate		82030600					97008200		
			Ate		82062900					94009900	ø 200,0 x 34	
				PRO	92029603	ø 236 x 20 x 41						
		120700	Ate		2054701	[o] 20547 16.8				91044800	ø 200 x 28	
1.6 GS	08/97→07/02	75 / 102										
			Ate		82030600					97008200		
			Ate		82062900					84044801	bore ø 19 ø 200 x 28	
				PRO	92056503	ø 256 x 20 x 41				94009900	ø 200,0 x 34	⊖ ABS
										94022300	ø 200,0 x 34	⊕ ABS
CORSA Hatchback 03/94→07/02													
		120800	Ate		2054701	[o] 20547 16.8						
1.0	03/94→07/00	37 / 50										
1.0	03/94→07/00	44 / 60										
1.0	08/97→07/02	50 / 68										
1.0 Hybrid	08/99→07/02	47 / 64										
1.6 GLS	08/94→07/02	68 / 92										
1.6 GS	08/97→07/02	75 / 102										
1.7 D	08/00→07/02	44 / 60										
CORSA Hatchback 03/02→													
		120900	Luc		2322501	[+] 23225 17						
1.0	08/02→	57 / 78										

CHEVROLET

CHEVROLET

		kW / hp												
CORSA Hatchback 03/02→														
1.0	01/07→12/10	56 / 76	Luc		**2322501**	[+] 23225 17								
1.0 Álcool	03/02→12/05	47 / 64												
1.0 Flex	09/05→12/10	58 / 79												
1.4	01/09→	68 / 92												
1.4 Flex	06/07→	77 / 105												
1.6	03/05→12/10	68 / 92												
1.8	08/02→	75 / 102												
1.8	08/02→	82 / 111												
1.8	01/07→12/10	82 / 111												
1.8 Ethanol	08/02→	84 / 114												
CORSA Kombi 08/97→07/02 → CORSA Estate, Page 231														
CORSA Saloon 02/02→														
		121000	Luc		**2322501**	[+] 23225 17								
1.0	02/02→12/05	47 / 64												
1.0	08/02→	57 / 78												
1.0	01/07→12/10	56 / 76												
1.0 Flex	01/07→12/10	58 / 79												
1.4	01/09→	68 / 92												
1.4 Flex	06/07→	77 / 105												
1.6	03/05→12/10	68 / 92												
1.8	08/02→	75 / 102												
1.8	08/02→	82 / 111												
1.8 Ethanol	08/02→	84 / 114												
CORSA Schrägheck 03/94→07/02 → CORSA Hatchback, Page 231														
CORSA Schrägheck 03/02→ → CORSA Hatchback, Page 231														
CORSA Stufenheck 02/02→ → CORSA Saloon, Page 232														
CORVETTE (C6) 09/04→														
		121100	PBR		**2419401**	[+] 24194 15.3	⊖ reinf.brake	PBR		**2419701**	[+] 24197 16.5	⊕ USA		
6.0	09/04→	298 / 405												
		121200	PBR		**2419401**	[+] 24194 15.3	⊕ ABS ⊖ reinf.brake	PBR		**2419701**	[+] 24197 16.5	⊖ EU		
6.2	03/06→	316 / 430												
6.2	02/08→	321 / 437												
6.2 ZR1	09/08→	476 / 647												
Z06 7.0	03/06→	371 / 498												
Z06 7.0	03/06→	377 / 512												
CORVETTE (C7) 09/13→														
		121300	Bre		**2332502**	[+] 23325 16	⊖ reinf.brake							
6.2	09/13→	321 / 437												
CORVETTE 01/97→09/04														
		121400	PBR		**2419401**	[+] 24194 15.3		PBR		**2419701**	[+] 24197 16.5			
5.7	01/97→09/04	253 / 344												
CORVETTE Cabriolet (C6) 09/04→ → CORVETTE Convertible (C6), Page 232														
CORVETTE Cabriolet (C7) 09/13→ → CORVETTE Convertible (C7), Page 232														
CORVETTE Cabriolet 09/97→09/04 → CORVETTE Convertible, Page 232														
CORVETTE Convertible (C6) 09/04→														
		121500	PBR		**2419401**	[+] 24194 15.3	⊖ reinf.brake	PBR		**2419701**	[+] 24197 16.5	⊕ USA		
6.0	09/04→	298 / 405												
		121600	PBR		**2419401**	[+] 24194 15.3	⊕ ABS ⊖ reinf.brake	PBR		**2419701**	[+] 24197 16.5	⊖ EU		
6.2	03/06→	316 / 430												
6.2	02/08→	321 / 437												
6.2 ZR1	09/08→04/10	476 / 647												
Z06 7.0	06/12→	377 / 512												
CORVETTE Convertible (C7) 09/13→														
		121700	Bre		**2332502**	[+] 23325 16	⊖ reinf.brake							
6.2	09/13→	335 / 456												
CORVETTE Convertible 09/97→09/04														
		121800	PBR		**2419401**	[+] 24194 15.3		PBR		**2419701**	[+] 24197 16.5			
5.7	09/97→09/04	253 / 344												
CRUZE (J300) 05/09→														
		121900			**2503101**	[+] 25031 18.8	15" -brake			**2509601**	[+] 25096 16.2	15" -brake ⊕ rear disc brake		
1.4	09/10→	103 / 140												
					2503181	[+] 25031 18.8	15" -brake			**2509602**	[+] 25096 16.2	16" -brake ⊕ rear disc brake		
					2503401	[+] 25034 18.8	16" -brake			**2509681**	[+] 25096 16.2	15" -brake ⊕ rear disc brake		
					2503481	[+] 25034 18.8	16" -brake			**92205503**	ø 268 x 12 x 45.1	15" -brake ⊕ rear disc brake		
					92198903	ø 276 x 26 x 45.5	15" -brake			**92205703**	ø 292 x 12 x 44.9	16" -brake ⊕ rear disc brake		
					92205603	ø 300 x 26 x 45.5	16" -brake							
		122000			**2503101**	[+] 25031 18.8	15" -brake			**2509601**	[+] 25096 16.2	15" -brake		
1.4	07/13→	74 / 101												
2.0 VCDi	03/12→	122 / 166			**2503181**	[+] 25031 18.8	15" -brake			**2509602**	[+] 25096 16.2	16" -brake		
					2503401	[+] 25034 18.8	16" -brake			**2509681**	[+] 25096 16.2	15" -brake		
					2503481	[+] 25034 18.8	16" -brake			**92205503**	ø 268 x 12 x 45.1	15" -brake		

→

		kW / hp											
CRUZE (J300) 05/09→													
		122000											
1.4	07/13→	74 / 101		PRO	**92198903**	ø 276 x 26 x 45.5	15" -brake		PRO	**92205703**	ø 292 x 12 x 44.9	16" -brake
2.0 VCDi	03/12→	122 / 166		PRO	**92205603**	ø 300 x 26 x 45.5	16" -brake					
		122100			**2503101**	[+] 25031 18.8	15" -brake			**2509602**	[+] 25096 16.2	15" -brake
1.4	10/13→	103 / 140		epad	**2503181**	[+] 25031 18.8	15" -brake		PRO	**92205503**	ø 268 x 12 x 45.1	15" -brake
					2503401	[+] 25034 18.8	16" -brake		PRO	**92205703**	ø 292 x 12 x 44.9	16" -brake
				epad	**2503481**	[+] 25034 18.8	16" -brake					
				PRO	**92198903**	ø 276 x 26 x 45.5	15" -brake ⊕ ABS					
				PRO	**92205603**	ø 300 x 26 x 45.5	16" -brake ⊕ ABS					
		122200			**2503101**	[+] 25031 18.8	⊕ rim size 15"			**2509601**	[+] 25096 16.2	⊕ rim size 15"
1.6	05/09→	80 / 109		epad	**2503181**	[+] 25031 18.8	⊕ rim size 15"		epad	**2509681**	[+] 25096 16.2	⊕ rim size 15"
					2503401	[+] 25034 18.8	⊕ rim size 16"			**82513400**		
				epad	**2503481**	[+] 25034 18.8	⊕ rim size 16"		PRO	**92205503**	ø 268 x 12 x 45.1	⊕ rim size 15"
			Man		**82505200**				PRO	**92205703**	ø 292 x 12 x 44.9	⊕ rim size 16"
				PRO	**92198903**	ø 276 x 26 x 45.5	⊕ rim size 15"					
				PRO	**92205603**	ø 300 x 26 x 45.5	⊕ rim size 16"					
		122300			**2503101**	[+] 25031 18.8	⊕ rim size 15"			**2509601**	[+] 25096 16.2	⊕ rim size 15"
1.6	05/09→	83 / 113										
1.6	05/09→	91 / 124		epad	**2503181**	[+] 25031 18.8	⊕ rim size 15"			**2509602**	[+] 25096 16.2	⊕ rim size 16"
1.7 D	01/12→	96 / 131							epad	**2509681**	[+] 25096 16.2	⊕ rim size 15"
1.8	05/09→	104 / 141			**2503401**	[+] 25034 18.8	⊕ rim size 16"					
1.8	11/09→12/13	103 / 140								**82513400**		
1.8 LPG	06/11→	104 / 141		epad	**2503481**	[+] 25034 18.8	⊕ rim size 16"					
2.0 CDI	05/09→	90 / 123							PRO	**92205503**	ø 268 x 12 x 45.1	⊕ rim size 15"
2.0 CDI	05/09→	92 / 125	Man		**82505200**				PRO	**92205703**	ø 292 x 12 x 44.9	⊕ rim size 16"
2.0 CDI	05/09→	110 / 150		PRO	**92198903**	ø 276 x 26 x 45.5	⊕ rim size 15"					
2.0 CDI	08/10→	120 / 163		PRO	**92205603**	ø 300 x 26 x 45.5	⊕ rim size 16"					
		122400			**2503401**	[+] 25034 18.8	16" -brake			**2509602**	[+] 25096 16.2	
1.6	12/12→	86 / 117		epad	**2503481**	[+] 25034 18.8	16" -brake		PRO	**92205503**	ø 268 x 12 x 45.1	15" -brake
1.6	12/12→	89 / 121		PRO	**92198903**	ø 276 x 26 x 45.5	15" -brake		PRO	**92205703**	ø 292 x 12 x 44.9	16" -brake
1.8 Flex	01/11→	106 / 144		PRO	**92205603**	ø 300 x 26 x 45.5	16" -brake					
		122500			**2503101**	[+] 25031 18.8	15" -brake			**2509602**	[+] 25096 16.2	
1.7 TD	11/13→	81 / 110		epad	**2503181**	[+] 25031 18.8	15" -brake		PRO	**92205503**	ø 268 x 12 x 45.1	15" -brake
					2503401	[+] 25034 18.8	16" -brake		PRO	**92205703**	ø 292 x 12 x 44.9	16" -brake
				epad	**2503481**	[+] 25034 18.8	16" -brake					
				PRO	**92198903**	ø 276 x 26 x 45.5	15" -brake					
				PRO	**92205603**	ø 300 x 26 x 45.5	16" -brake					
		122600			**2503101**	[+] 25031 18.8	15" -brake			**2509602**	[+] 25096 16.2	15" -brake 16" -brake
1.8	05/09→	101 / 137										
1.8 Flex	09/13→	101 / 137		epad	**2503181**	[+] 25031 18.8	15" -brake		PRO	**92205503**	ø 268 x 12 x 45.1	15" -brake
2.0 CDI	09/13→	110 / 150			**2503401**	[+] 25034 18.8	16" -brake		PRO	**92205703**	ø 292 x 12 x 44.9	16" -brake
				epad	**2503481**	[+] 25034 18.8	16" -brake					
				PRO	**92198903**	ø 276 x 26 x 45.5	15" -brake					
				PRO	**92205603**	ø 300 x 26 x 45.5	16" -brake					
CRUZE 07/00→09/08													
		122700	Sum		**2350701**	[+] 23507 15		NBK		**2404001**	[+] 24040 14.4	
1.3	07/00→09/08	61 / 83										
1.3 AWD	07/00→09/08	61 / 83										

CHEVROLET

CHEVROLET

		kW / hp									
CRUZE 07/00→09/08											
		122700	Sum		82076700			NBK		82510800	
1.3	07/00→09/08	61 / 83									
1.3 AWD	07/00→09/08	61 / 83			92131200	ø 257 x 17 x 49.3				91058500	ø 180 x 26
										97013400	
		122800	Sum		2350701	[+] 23507 15				91065200	ø 200 x 29
1.5	08/03→09/08	73 / 99									
1.5 AWD	08/03→09/08	73 / 99	Bos		2360501	[+] 23605 15.5					
			Sum		82076700						
				PRO	92135303	ø 253 x 17 x 49.1					
CRUZE Hatchback (J305) 06/11→											
		122900			2503101	[+] 25031 18.8	⊕ rim size 15"			2509601	[+] 25096 16.2 ⊕ rim size 15"
1.4	06/12→	103 / 140									
1.6	06/11→	91 / 124									
1.6	01/12→	80 / 109			2503181	[+] 25031 18.8	⊕ rim size 15"			2509602	[+] 25096 16.2 ⊕ rim size 16"
1.7 D	01/12→	96 / 131		epad							
1.8	06/11→	104 / 141			2503401	[+] 25034 18.8	⊕ rim size 16"			2509681	[+] 25096 16.2 ⊕ rim size 15"
2.0 CDI	06/11→	120 / 163							epad		
2.0 CDI	01/12→	110 / 150			2503481	[+] 25034 18.8	⊕ rim size 16"			82513400	
				epad							
			Man		82505200				PRO	92205503	ø 268 x 12 x 45.1 ⊕ rim size 15"
				PRO	92198903	ø 276 x 26 x 45.5	⊕ rim size 15"		PRO	92205703	ø 292 x 12 x 44.9 ⊕ rim size 16"
				PRO	92205603	ø 300 x 26 x 45.5	⊕ rim size 16"				
		123000			2503101	[+] 25031 18.8	15" -brake			2509601	[+] 25096 16.2 15" -brake
1.4	07/13→	74 / 101									
1.8 Flex	10/12→	106 / 144			2503181	[+] 25031 18.8	15" -brake			2509602	[+] 25096 16.2 16" -brake
				epad							
					2503401	[+] 25034 18.8	16" -brake			2509681	[+] 25096 16.2 15" -brake
									epad		
					2503481	[+] 25034 18.8	16" -brake		PRO	92205503	ø 268 x 12 x 45.1 15" -brake
				epad							
				PRO	92198903	ø 276 x 26 x 45.5	15" -brake		PRO	92205703	ø 292 x 12 x 44.9 16" -brake
				PRO	92205603	ø 300 x 26 x 45.5	16" -brake				
		123100			2503401	[+] 25034 18.8	16" -brake			2509602	[+] 25096 16.2
1.6	12/12→	86 / 117									
1.6	12/12→	89 / 121			2503481	[+] 25034 18.8	16" -brake		PRO	92205503	ø 268 x 12 x 45.1 15" -brake
1.8 LPG	06/11→	104 / 141		epad							
				PRO	92198903	ø 276 x 26 x 45.5	15" -brake		PRO	92205703	ø 292 x 12 x 44.9 16" -brake
				PRO	92205603	ø 300 x 26 x 45.5	16" -brake				
		123200			2503101	[+] 25031 18.8	15" -brake			2509601	[+] 25096 16.2 15" -brake
1.7 TD	08/13→	81 / 110									
					2503181	[+] 25031 18.8	15" -brake			2509681	[+] 25096 16.2 15" -brake
				epad					epad		
					2503401	[+] 25034 18.8	16" -brake		PRO	92205503	ø 268 x 12 x 45.1 15" -brake
					2503481	[+] 25034 18.8	16" -brake		PRO	92205703	ø 292 x 12 x 44.9 16" -brake
				epad							
					2509602	[+] 25096 16.2	16" -brake				
				PRO	92198903	ø 276 x 26 x 45.5	15" -brake				
				PRO	92205603	ø 300 x 26 x 45.5	16" -brake				
		123300			2503101	[+] 25031 18.8	⊕ rim size 15"			2509601	[+] 25096 16.2 ⊕ rim size 15"
1.8	10/11→	103 / 140									
					2503181	[+] 25031 18.8	⊕ rim size 15"			2509602	[+] 25096 16.2 ⊕ rim size 16"
				epad							
					2503401	[+] 25034 18.8	⊕ rim size 16"			2509681	[+] 25096 16.2 ⊕ rim size 15"
									epad		
					2503481	[+] 25034 18.8	⊕ rim size 16"		PRO	92205503	ø 268 x 12 x 45.1 ⊕ rim size 15"
				epad							
				PRO	92198903	ø 276 x 26 x 45.5	⊕ rim size 15"		PRO	92205703	ø 292 x 12 x 44.9 ⊕ rim size 16"
				PRO	92205603	ø 300 x 26 x 45.5	⊕ rim size 16"				
CRUZE Schrägheck (J305) 06/11→ → CRUZE Hatchback (J305), Page 234											
CRUZE Station Wagon (J308) 08/12→											
		123400			2503101	[+] 25031 18.8	⊕ rim size 15" J67 -brake			2509602	[+] 25096 16.2 ⊕ rim size 15" J67 -brake
1.4	08/12→	103 / 140									
1.6	08/12→	91 / 124									

→

		kW / hp											
CRUZE Station Wagon (J308) 08/12→													
1.7 TD	08/12→	96 / 131		2503181	[+] 25031	18.8	⊕ rim size 15" J67 -brake		PRO	92205503	ø 268 x 12 x 45.1	⊕ rim size 15" J67 -brake
1.8	08/12→	104 / 141										
2.0 TD	08/12→	120 / 163		2503401	[+] 25034	18.8	⊕ rim size 16" J60 -brake		PRO	92205703	ø 292 x 12 x 44.9	⊕ rim size 16" J60 -brake
				2503481	[+] 25034	18.8	⊕ rim size 16" J60 -brake					
			PRO	92198903	ø 276 x 26 x 45.5		⊕ rim size 15" J67 -brake					
			PRO	92205603	ø 300 x 26 x 45.5		⊕ rim size 16" J60 -brake					
		123500		2503101	[+] 25031	18.8	15" -brake			2509601	[+] 25096	16.2 15" -brake
1.4	07/13→	74 / 101		2503181	[+] 25031	18.8	15" -brake			2509602	[+] 25096	16.2 16" -brake
				2503401	[+] 25034	18.8	16" -brake			2509681	[+] 25096	16.2 15" -brake
				2503481	[+] 25034	18.8	16" -brake		PRO	92205503	ø 268 x 12 x 45.1	15" -brake
			PRO	92198903	ø 276 x 26 x 45.5		15" -brake		PRO	92205703	ø 292 x 12 x 44.9	16" -brake
			PRO	92205603	ø 300 x 26 x 45.5		16" -brake					
		123600		2503401	[+] 25034	18.8	16" -brake		PRO	92205503	ø 268 x 12 x 45.1	15" -brake
1.6	12/12→	86 / 117		2503481	[+] 25034	18.8	16" -brake		PRO	92205703	ø 292 x 12 x 44.9	16" -brake
1.6	12/12→	89 / 121	PRO	92198903	ø 276 x 26 x 45.5		15" -brake					
			PRO	92205603	ø 300 x 26 x 45.5		16" -brake					
		123700		2503101	[+] 25031	18.8	15'' -brake			2509602	[+] 25096	16.2
1.7 TD	11/13→	81 / 110		2503181	[+] 25031	18.8	15'' -brake		PRO	92205503	ø 268 x 12 x 45.1	15'' -brake
				2503401	[+] 25034	18.8	16'' -brake		PRO	92205703	ø 292 x 12 x 44.9	16'' -brake
				2503481	[+] 25034	18.8	16'' -brake					
			PRO	92198903	ø 276 x 26 x 45.5		15'' -brake					
			PRO	92205603	ø 300 x 26 x 45.5		16'' -brake					
EPICA (KL1_) 01/05→													
		123800	Sum	2406201	[+] 24062	17.6	112279→			2474401	[+] 24744	14.7
1.8	01/06→	90 / 122										
2.0	01/05→12/06	94 / 128	Sum	2486401	[+] 24864	17	→112278	Sum		82044600		
2.0	01/05→12/06	98 / 133										
2.0	06/06→	105 / 144										
2.0	08/06→	96 / 131	Ake	82508400					PRO	92225103	ø 276 x 12 x 58	
2.0 D	01/07→	110 / 150		92133500	ø 256 x 24 x 47.5					91071000	ø 170 x 26	
2.5	06/06→	115 / 156	PRO	92227303	ø 278 x 24 x 47							
EQUINOX 04/03→09/09													
		123900	Man	2451001	[+] 24510	16.9		Man		2449801	[+] 24498	15.4
3.4	04/03→09/09	138 / 188										
3.4 AWD	04/03→09/09	138 / 188	Man	82077300				Man		82077200		
				92165400	ø 296 x 29 x 51.6					92165500	ø 303 x 20 x 71.7	
										91067100	ø 188.4 x 26	
										97038500		
EVANDA 03/05→													
		124000	Sum	2406201	[+] 24062	17.6		Sum		2399401	[–] 23994	14.8
2.0	03/05→	96 / 131										
			Ake	82508400				Sum		82044600		
				92133500	ø 256 x 24 x 47.5					91071000	ø 170 x 26	
EVANDA Saloon 03/05→ → EVANDA, Page 235													
EVANDA Stufenheck 03/05→ → EVANDA, Page 235													
FORESTER 06/02→09/08													
		124100	Tok	2386501	[+] 23865	16.4		Ake		82502600		
2.0 AWD	06/02→09/08	88 / 120										
			Tok	82502900						91045901	ø 228.6 x 36	

CHEVROLET

CHEVROLET

		kW / hp									
FORESTER 06/02→09/08											
		124100									
2.0 AWD	06/02→09/08	88 / 120		PRO 92094603	ø 276.5 x 24 x 56.8			94031000	ø 228,4 x 43	
HHR 09/05→12/11										
		124200								
2.0 SS	09/08→12/09	194 / 264		2481701	[+] 24817 17			91077500	ø 230 x 42	
2.2	09/05→12/06	107 / 146								
2.2	01/06→12/11	108 / 147								
2.2	09/07→12/08	111 / 151								
2.2 Flexfuel	09/08→12/10	116 / 158								
2.4	09/05→12/07	130 / 177								
2.4	01/06→12/11	128 / 174								
2.4	10/07→12/11	125 / 170								
		124300								
2.0 Turbo	08/07→12/10	194 / 264		2481701	[+] 24817 17					
2.4	01/07→09/07	130 / 177								
IMPALA Saloon 01/99→12/05										
		124400	Wag	2335801	[+] 23358 18		Ake	2336101	[+] 23361 15	
3.4 V6	01/99→12/05	134 / 182								
3.8	06/03→05/05	179 / 243								
3.8 V6	01/99→12/05	149 / 203								
5.7	10/99→05/05	212 / 288								
IMPALA Stufenheck 01/99→12/05 → IMPALA Saloon, Page 236										
KALOS 03/05→										
		124500	Ake	2397401	[–] 23974 17.8			91062500	ø 200 x 35	
1.2	03/05→	53 / 72								
1.4	03/05→	61 / 83	Ake	2397406	[+] 23974 17.8			97033700		
1.4 16V	03/05→	69 / 94								
1.6	06/06→05/08	77 / 105	Ake	82508400				94032100	ø 200 x 40.5	⊕ ABS
				92133400	ø 236 x 20 x 41					
KALOS Saloon 03/05→										
		124600	Ake	2397401	[–] 23974 17.8			91062500	ø 200 x 35	
1.2	03/05→	53 / 72								
1.4	03/05→	61 / 83	Ake	2397406	[+] 23974 17.8			97033700		
1.4 16V	03/05→	69 / 94								
			Ake	82508400				94032100	ø 200 x 40.5	⊕ ABS
				92133400	ø 236 x 20 x 41					
KALOS Stufenheck 03/05→ → KALOS Saloon, Page 236										
LACETTI (J200) 03/05→										
		124700	Ake	2323401	[+] 23234 16.9		Sum	2407101	[–] 24071 14.6	→12/06
1.4 16V	03/05→	70 / 95								
1.6	03/05→	80 / 109	Ake	82508400			Sum	2523201	[–] 25232 14.4	01/07→
1.8	03/05→	90 / 122								
1.8	08/05→	89 / 121		92133600	ø 256 x 24 x 47.2			82502300		
								92163000	ø 258 x 10.6 x 57.5	
		124800	Ake	2323401	[+] 23234 16.9		Sum	2523201	[–] 25232 14.4	
2.0 D	01/07→	89 / 121								
			Ake	82508400				82502300		
				92133600	ø 256 x 24 x 47.2			92163000	ø 258 x 10.6 x 57.5	
LACETTI Estate (J200) 03/05→										
		124900	Ake	2323401	[+] 23234 16.9		Sum	2407101	[–] 24071 14.6	→12/06
1.4	03/05→	70 / 95								
1.6	03/05→	80 / 109	Ake	82508400			Sum	2523201	[–] 25232 14.4	01/07→
1.8	08/05→	89 / 121								
				92133600	ø 256 x 24 x 47.2			82502300		
								92163000	ø 258 x 10.6 x 57.5	
		125000	Ake	2323401	[+] 23234 16.9		Sum	2523201	[–] 25232 14.4	
2.0 D	01/07→	89 / 121								
			Ake	82508400				82502300		
				92133600	ø 256 x 24 x 47.2			92163000	ø 258 x 10.6 x 57.5	
LACETTI Kombi (J200) 03/05→ → LACETTI Estate (J200), Page 236										
LANOS Saloon 11/05→										
		125100	Ate	2054701	[o] 20547 16.8			91044900	ø 200 x 45	
1.4	11/05→	55 / 75								
1.5	11/05→	63 / 86	PRO	92029603	ø 236 x 20 x 41			97033700		
								94008600	ø 200,0 x 52.5	⊕ ABS

→

30 kW / hp												
LANOS Saloon 11/05→												
125100												
1.4	11/05→	55 / 75										
1.5	11/05→	63 / 86										
125200			Ate		**2186201**	[o] 21862 18.3			**91044900**	ø 200 x 45	
1.6 16V	11/05→	78 / 106		PRO	**92039203**	ø 256 x 24 x 41			**97033700**		
									94008600	ø 200,0 x 52.5	⊕ ABS
									94035100	ø 200,0 x 53.6	⊖ ABS
LANOS Stufenheck 11/05→ → LANOS Saloon, Page 236												
LUV 10/93→12/06												
125300			Ake		**2154302**	[+] 21543 16.5					
2.2	09/96→12/05	86 / 115									
2.2	01/04→12/06	83 / 113									
2.3	10/93→09/05	64 / 87									
2.3	08/95→09/03	66 / 90									
2.3 AWD	10/93→04/00	64 / 87									
2.4 DiTD	10/02→09/05	88 / 120									
2.5 D	09/95→09/05	55 / 75									
2.5 TD AWD	01/99→08/01	59 / 80									
3.5 AWD	10/02→09/05	169 / 230									
MALIBU (V300) 01/12→												
125400			Man		**2441201**	[+] 24412 19.1	17" -brake	TRW		**2442101**	[+] 24421 17.3	16" -brake
2.0	02/12→	104 / 141										
2.0 LPG	02/12→	101 / 137										
2.4	01/12→	125 / 170	Man		**2441501**	[+] 24415 19.1	16" -brake	TRW		**2442102**	[+] 24421 17.3	17" -brake
			Man		**82503800**			Luc		**82503900**		17" -brake
				PRO	**92186903**	ø 296 x 30 x 51	16" -brake ⊕ Middle East			**82513400**		16" -brake ⊖ Middle East
				PRO	**92187003**	ø 321 x 30 x 50.9	17" -brake		PRO	**92222903**	ø 292 x 12 x 48	16" -brake
125500			Man		**2441201**	[+] 24412 19.1	17" -brake	TRW		**2442101**	[+] 24421 17.3	16" -brake
2.0	09/12→	193 / 262										
2.4 Hybrid	09/12→	136 / 185										
2.5	09/12→12/13	142 / 193	Man		**2441501**	[+] 24415 19.1	16" -brake ⊖ Middle East	TRW		**2442102**	[+] 24421 17.3	17" -brake
2.5	07/13→	147 / 200										
Eco	09/13→	136 / 185		PRO	**92186903**	ø 296 x 30 x 51	16" -brake ⊕ Middle East		PRO	**92222903**	ø 292 x 12 x 48	16" -brake
				PRO	**92187003**	ø 321 x 30 x 50.9	17" -brake					
125600			Man		**2441201**	[+] 24412 19.1	17" -brake	TRW		**2442101**	[+] 24421 17.3	16" -brake
2.0 D	04/12→	118 / 160										
2.4	01/12→	123 / 167	Man		**2441501**	[+] 24415 19.1	16" -brake	TRW		**2442102**	[+] 24421 17.3	17" -brake
			Man		**82503800**			Luc		**82503900**		17" -brake
				PRO	**92186903**	ø 296 x 30 x 51	16" -brake			**82513400**		16" -brake
				PRO	**92187003**	ø 321 x 30 x 50.9	17" -brake		PRO	**92222903**	ø 292 x 12 x 48	16" -brake
MALIBU 08/96→09/03												
125700			Wag		**2471701**	[+] 24717 17.3				**91075100**	ø 225 x 45	
3.1	08/96→09/99	116 / 158										
3.1	10/99→09/03	126 / 171										
MALIBU 10/03→12/07												
125800			Bos		**2479301**	[+] 24793 19.5						
2.2	10/03→12/07	108 / 147										
3.5	10/05→12/07	162 / 220	Bos		**82513200**							
3.5 [RWD]	10/03→09/07	149 / 203										
3.5 LS	10/03→09/05	149 / 203										
3.9	04/06→12/07	179 / 243										
MALIBU 09/08→												
125900					**2481701**	[+] 24817 17						
2.4	01/12→	127 / 173										
3.6	09/08→12/12	188 / 256										
MALIBU Hatchback 10/03→12/08												
126000			Bos		**2479301**	[+] 24793 19.5						
2.2	10/03→12/08	108 / 147										
3.5	10/03→09/05	149 / 203	Bos		**82513200**							
3.5	10/05→12/08	162 / 220										
3.5 Rear Wheel Drive	10/03→09/07	149 / 203										
MALIBU MAXX Fastback 10/03→12/08 → MALIBU Hatchback, Page 237												
MALIBU MAXX Schrägheck 10/03→12/08 → MALIBU Hatchback, Page 237												
MALIBU Schrägheck 10/03→12/08 → MALIBU Hatchback, Page 237												
MATIZ (M200, M250) 03/05→												
126100			Ake		**2324102**	[–] 23241 16.5				**91054000**	ø 180 x 31	
0.8	03/05→	38 / 52										
0.8 LPG	03/05→	38 / 52			**82061500**					**97015600**		
1.0	03/05→	47 / 64										
1.0	03/05→	49 / 67										

CHEVROLET

CHEVROLET

		kW / hp									
MATIZ (M200, M250) 03/05→											
1.0	01/07→	48 / 65		92100300	ø 236 x 12.5 x 35.5			83054000	bore ø 17.5 ø 180 x 31	
1.0 LPG	03/05→	49 / 67					Luc	84054000	bore ø 17.5 ø 180 x 31	
1.0 LPG	01/07→	44 / 60						94026200	ø 180 x 40	
MATIZ (M300) 03/10→ → SPARK (M300), Page 240										
MERIVA 02/02→01/08										
		126200	Ate	2383201	[+] 23832 19.6		Luc	2341703	[+] 23417 15.2	
1.4 Flex	07/07→07/12	77 / 105								
1.4 Flex	09/08→	73 / 99	Ate	2383281	[+] 23832 19.6		Luc	82060100		
1.8	02/02→	75 / 102								
1.8	03/03→	82 / 111								
1.8	05/03→05/08	92 / 125	Ate	82032000			Luc	82063300		
1.8 Flex	03/03→	84 / 114								
1.8 Flex	11/03→08/05	77 / 105	Ate	82062900				92124703	ø 264 x 10 x 42	
				92124603	ø 280 x 25 x 42.5					
		126300	Ate	2383201	[+] 23832 19.6		Luc	2341703	[+] 23417 15.2	
1.7 D	08/02→01/08	55 / 75								
			Ate	2383281	[+] 23832 19.6		Luc	82060100		
			Ate	82032000			Luc	82063300		
			Ate	82062900				92092103	ø 264 x 10 x 42	⊕ rim 5 hole
				92091903	ø 280 x 25 x 42	⊕ rim 5 hole		92124703	ø 264 x 10 x 42	⊕ rim 4 hole
				92124603	ø 280 x 25 x 42.5	⊕ rim 4 hole		TPM0008		
NABIRA (F75) 02/99→ → ZAFIRA (F75), Page 242										
NIVA 09/02→										
		126400	GM	2397601	[–] 23976 16			91029100	ø 250 x 51	
1.7 4x4	09/02→	59 / 80								
1.7 4x4	01/10→	61 / 83		92019900	ø 272 x 11 x 50.5			83029100	bore ø 20.6 ø 250 x 51	
1.8 4x4	01/07→12/09	92 / 125						94015700	ø 250,0 x 57.5	
NUBIRA Estate 01/05→										
		126500	Ake	2323401	[+] 23234 16.9		Luc	2323701	[–] 23237 14.5	⊕ rear disc brake Lucas
1.5	01/05→	78 / 106								
2.0	01/05→	88 / 120	Ake	82508400			Sum	2407101	[–] 24071 14.6	⊕ rear disc brake Sumitomo →12/06
				92133600	ø 256 x 24 x 47.2		Sum	2523201	[–] 25232 14.4	01/07→
								82502300		⊕ rear disc brake Sumitomo
								91044900	ø 200 x 45	⊕ rear drum brake
								97033700		⊕ rear drum brake
								92163000	ø 258 x 10.6 x 57.5	⊕ rear disc brake
								94008600	ø 200,0 x 52.5	⊕ rear drum brake
		126600	Ake	2323401	[+] 23234 16.9		Luc	2323701	[–] 23237 14.5	⊕ rear disc brake Lucas
1.6	03/05→	80 / 109								
1.8	03/05→	90 / 122	Ake	82508400			Sum	2407101	[–] 24071 14.6	⊕ rear disc brake Sumitomo →12/06
1.8	08/05→	89 / 121		92133600	ø 256 x 24 x 47.2		Sum	2523201	[–] 25232 14.4	01/07→
								82502300		⊕ rear disc brake Sumitomo
								91044900	ø 200 x 45	⊕ rear drum brake
								97033700		⊕ rear drum brake
								92163000	ø 258 x 10.6 x 57.5	
								94008600	ø 200,0 x 52.5	⊕ rear drum brake
		126700	Ake	2323401	[+] 23234 16.9		Luc	2323701	[–] 23237 14.5	⊕ rear disc brake Lucas
2.0 D	01/07→	89 / 121								
			Ake	82508400			Sum	2523201	[–] 25232 14.4	
				92133600	ø 256 x 24 x 47.2			82502300		⊕ rear disc brake Sumitomo

→

		kW / hp										
NUBIRA Estate 01/05→												
		126700										
2.0 D	01/07→	89 / 121										
										91044900	ø 200 x 45	⊕ rear drum brake
										97033700		⊕ rear drum brake
										92163000	ø 258 x 10.6 x 57.5	⊕ rear disc brake
										94008600	ø 200,0 x 52.5	⊕ rear drum brake
NUBIRA Kombi 01/05→ → NUBIRA Estate, Page 238												
NUBIRA Saloon 01/05→												
		126800	Ake		2323401	[+] 23234 16.9		Luc		2323701	[–] 23237 14.5	⊕ rear disc brake Lucas
1.4	01/05→	69 / 94										
1.4	01/06→	70 / 95	Ake		82508400			Sum		2407101	[–] 24071 14.6	⊕ rear disc brake Sumitomo →12/06
1.5	01/05→	78 / 106										
1.8	01/06→	89 / 121										
2.0	01/05→	88 / 120			92133600	ø 256 x 24 x 47.2		Sum		2523201	[–] 25232 14.4	01/07→
2.0 D	01/05→	89 / 121								82502300		⊕ rear disc brake Sumitomo
										91044900	ø 200 x 45	⊕ rear drum brake
										97033700		⊕ rear drum brake
										92163000	ø 258 x 10.6 x 57.5	⊕ rear disc brake
										94008600	ø 200,0 x 52.5	⊕ rear drum brake
		126900	Ake		2323401	[+] 23234 16.9		Luc		2323701	[–] 23237 14.5	⊕ rear disc brake Lucas
1.6	03/05→	80 / 109										
1.8	03/05→	90 / 122	Ake		82508400			Sum		2407101	[–] 24071 14.6	⊕ rear disc brake Sumitomo →12/06
					92133600	ø 256 x 24 x 47.2		Sum		2523201	[–] 25232 14.4	01/07→
										82502300		⊕ rear disc brake Sumitomo
										91044900	ø 200 x 45	⊕ rear drum brake
										97033700		⊕ rear drum brake
										92163000	ø 258 x 10.6 x 57.5	
										94008600	ø 200,0 x 52.5	⊕ rear drum brake
		127000	Ake		2323401	[+] 23234 16.9		Luc		2323701	[–] 23237 14.5	⊕ rear disc brake Lucas
1.6	01/10→	76 / 104										
			Ake		82508400			Sum		2523201	[–] 25232 14.4	
					92133600	ø 256 x 24 x 47.2				82502300		⊕ rear disc brake Sumitomo
										91044900	ø 200 x 45	⊕ rear drum brake
										97033700		⊕ rear drum brake
										92163000	ø 258 x 10.6 x 57.5	
										94008600	ø 200,0 x 52.5	⊕ rear drum brake
NUBIRA Stufenheck 01/05→ → NUBIRA Saloon, Page 239												
OPTRA (1J_) 08/03→12/08												
		127100	Ake		2323401	[+] 23234 16.9		Luc		2323701	[–] 23237 14.5	⊕ rear disc brake Lucas
1.6	08/03→12/08	78 / 106										
1.6	08/03→12/08	80 / 109	Ake		82508400			Sum		2407101	[–] 24071 14.6	⊕ rear disc brake Sumitomo
1.8	08/03→12/08	90 / 122										
2.0	08/03→12/08	97 / 132			92102600	ø 256 x 24 x 47				82502300		⊕ rear disc brake Sumitomo
2.0 TDCi	08/06→12/08	89 / 121								91044900	ø 200 x 45	⊕ rear drum brake
										97033700		⊕ rear drum brake
										92129000	ø 258 x 10 x 64.5	⊕ rear disc brake
										94008600	ø 200,0 x 52.5	⊕ rear drum brake
OPTRA Estate 06/06→												
		127200	Ake		2323401	[+] 23234 16.9		Sum		2407101	[–] 24071 14.6	⊕ rear disc brake Sumitomo →12/06
1.6	06/06→	80 / 109										
1.6	06/06→12/08	78 / 106	Ake		82508400			Sum		2523201	[–] 25232 14.4	01/07→
2.0	06/06→12/08	97 / 132										

CHEVROLET

CHEVROLET

kW / hp

OPTRA Estate 06/06→

127200													
1.6	06/06→	80 / 109			92133600	ø 256 x 24 x 47.2				82502300		⊕ rear disc brake Sumitomo
1.6	06/06→12/08	78 / 106								91044900	ø 200 x 45	⊕ rear drum brake
2.0	06/06→12/08	97 / 132								97033700		⊕ rear drum brake
										92129000	ø 258 x 10 x 64.5	⊕ rear disc brake
										94008600	ø 200,0 x 52.5	⊕ rear drum brake

OPTRA Hatchback 06/06→

127300			Ake		2323401	[+] 23234 16.9		Sum		2407101	[–] 24071 14.6	⊕ rear disc brake Sumitomo →12/06
1.6 SRV	06/06→	74 / 101										
1.8 SRV	06/06→	90 / 122	Ake		82508400			Sum		2523201	[–] 25232 14.4	01/07→
					92133600	ø 256 x 24 x 47.2				82502300		⊕ rear disc brake Sumitomo
										91044900	ø 200 x 45	⊕ rear drum brake
										97033700		⊕ rear drum brake
										92129000	ø 258 x 10 x 64.5	⊕ rear disc brake
										94008600	ø 200,0 x 52.5	⊕ rear drum brake

OPTRA Kombi 06/06→ → OPTRA Estate, Page 239

OPTRA Schrägheck 06/06→ → OPTRA Hatchback, Page 240

OPTRA Stufenheck 01/05→ → NUBIRA Saloon, Page 239

ORLANDO (J309) 02/11→

127400					2503401	[+] 25034 18.8				2509602	[+] 25096 16.2	
1.4	06/12→	103 / 140										
1.8	02/11→	104 / 141			2503481	[+] 25034 18.8				82516700		
1.8 LPG	06/11→	104 / 141										
2.0 D	02/11→	96 / 131										
2.0 D	02/11→	120 / 163	Man		82505200					92205703	ø 292 x 12 x 44.9	
2.0 LPG	02/12→	103 / 140										
					92205603	ø 300 x 26 x 45.5						

REZZO 03/05→

127500			Ake		2323401	[+] 23234 16.9				91072000	ø 230 x 52	
1.6	03/05→	77 / 105										
1.6	08/05→	79 / 107	Ake		82508400					97033200		
2.0	03/05→	89 / 121										
2.0	08/05→	90 / 122										
					92133500	ø 256 x 24 x 47.5						

S10 04/03→ → COLORADO, Page 231

SILVERADO 1500 10/99→

127600										2510601	[–] 25106 15.9	
4.3	10/99→12/07	147 / 200										
4.3	01/03→12/06	145 / 197										
4.3 AWD	10/99→12/07	147 / 200										
4.8 AWD	06/05→	202 / 275										
5.3 AWD	10/99→	201 / 273										
5.3 AWD	06/03→	212 / 288										
5.3 AWD	01/04→12/04	220 / 299										
6.0	10/99→	224 / 305										
6.0 AWD	10/99→	224 / 305										

SONIC Fastback (T300) 03/11→ → AVEO Hatchback (T300), Page 228

SONIC Hatchback (T300) 03/11→ → AVEO Hatchback (T300), Page 228

SONIC Saloon (T300) 03/11→ → AVEO Saloon (T300), Page 229

SONIC Schrägheck (T300) 03/11→ → AVEO Hatchback (T300), Page 228

SONIC Sedán (T300) 03/11→ → AVEO Saloon (T300), Page 229

SONIC Stufenheck (T300) 03/11→ → AVEO Saloon (T300), Page 229

Spark (M200, M250) 03/05→ → MATIZ (M200, M250), Page 237

SPARK (M300) 03/10→

127700					2526801	[+] 25268 17.9				91062500	ø 200 x 35	
1.0	03/10→	50 / 68										
1.0 D	01/12→	46 / 63			92133400	ø 236 x 20 x 41				97033700		
1.0 LPG	03/10→	50 / 68										
1.2	03/10→	60 / 82										
1.2	01/11→	59 / 80										
1.2	01/11→	61 / 83										
1.2 LPG	03/10→	60 / 82										
1.2 LPG	01/11→	59 / 80										
127800					2526801	[+] 25268 17.9				91062500	ø 200 x 35	
1.0 D	03/13→	43 / 59										
					92133400	ø 236 x 20 x 41						

		kW / hp											
SPARK 09/00→12/04													
		127900	Ake		2324102	[–] 23241 16.5				91054000	ø 180 x 31	
0.8	09/00→12/04	38 / 52								97015600		
										94026200	ø 180 x 40	
		128000	Ake		2324102	[–] 23241 16.5				91054000	ø 180 x 31	
1.0	11/02→12/04	47 / 64								97015600		
SPARK 05/05→													
		128100	Ake		2324102	[–] 23241 16.5				91054000	ø 180 x 31	
0.8	05/05→	37 / 50										
1.0 LPG	05/05→	46 / 63			82061500					97015600		
1.0 SX	05/05→	46 / 63										
1.0 SX	05/05→	49 / 67			92133400	ø 236 x 20 x 41				94026200	ø 180 x 40	
1.0 SX	06/09→	44 / 60										
TACUMA 03/05→ → REZZO, Page 240													
TIGRA 08/97→12/99													
		128200	Ate		2054701	[o] 20547 16.8				91044800	ø 200 x 28	
1.6	08/97→12/99	74 / 101	Ate		82030600					97008200		
			Ate		82062900					84044801	bore ø 19 ø 200 x 28	
				PRO	92056503	ø 256 x 20 x 41				94009900	ø 200,0 x 34	⊖ ABS
										94022300	ø 200,0 x 34	⊕ ABS
TRACKER 05/98→10/08													
		128300	Ake		2190701	[+] 21907 15.4						
1.6	05/98→07/04	71 / 97										
1.6 AWD	05/98→07/04	71 / 97										
2.0 AWD	10/99→07/04	97 / 132										
2.0 AWD	08/05→10/08	94 / 128										
TRACKER 12/12→ → TRAX, Page 241													
TRAILBLAZER (KC_) 09/01→09/08													
		128400			2444801	[+] 24448 16.8				2444501	[+] 24445 16.9	
4.2 AWD	09/01→09/08	201 / 273										
4.2 AWD	08/05→09/08	217 / 295										
5.3 AWD	08/02→09/08	213 / 290			92226200	ø 325 x 29 x 54						
TRANS SPORT 08/96→09/05													
		128500	Wag		2335801	[+] 23358 18			Ake	2336101	[+] 23361 15	
3.4	08/96→09/05	137 / 186										
3.4 V6	10/00→09/05	138 / 188										
3.4 V6 AWD	10/01→09/05	138 / 188			92091500	ø 278 x 32 x 52				92099800	ø 278 x 11 x 50.5	
TRAX 12/12→													
		128600			2503401	[+] 25034 18.8				2509602	[+] 25096 16.2	
1.4	12/12→	103 / 140										
1.4 AWD	12/12→	103 / 140			2503481	[+] 25034 18.8				82516700		
1.6	12/12→	85 / 116		epad								
1.6 AWD	12/12→	85 / 116										
1.7 TD	12/12→	96 / 131	Man		82505200					92205503	ø 268 x 12 x 45.1	
1.7 TD AWD	12/12→	96 / 131										
1.8	03/13→	103 / 140		PRO	92243303	ø 300 x 26 x 45.5						
1.8 AWD	03/13→	103 / 140										
		128700			2503401	[+] 25034 18.8				2509602	[+] 25096 16.2	
1.4 LPG	04/13→	103 / 140										
1.8 Flex	03/13→	106 / 144			2503481	[+] 25034 18.8				92205503	ø 268 x 12 x 45.1	
				epad								
				PRO	92243303	ø 300 x 26 x 45.5						
VECTRA 04/02→04/04													
		128800	Ate		2340404	[o] 23404 20.4	⊕ police veh. ⊕ sports susp.		Ate	2413701	[–] 24137 16.7	
2.2	04/02→04/04	108 / 147	Ate		2373807	[o] 23738 20.6	→51999999 →58999999		Ate	2413781	[–] 24137 16.7	
			Ate		2415501	[o] 24155 20.6	61000001→		Ate	82062900		
					98029100	L685	→48045597 →41048789		Ate	82503500		
			Ate		82029300					92118503	ø 278 x 12 x 41.5	
			Ate		82062900					92118403	ø 292 x 20 x 41.5	
				PRO	92118303	ø 302 x 28 x 45	⊕ police veh. ⊕ sports susp.					

CHEVROLET

CHEVROLET

		kW / hp											
VECTRA 04/02→04/04													
2.2	04/02→04/04	128800 108 / 147		PRO	92118703	ø 285 x 25 x 41.9							
VECTRA 01/05→07/06													
2.2	01/05→07/06	128900 114 / 155	Ate		2340404	[o] 23404 20.4	⊕ police veh. ⊕ sports susp.	Ate		2413701	[–] 24137 16.7	
			Ate		2373807	[o] 23738 20.6	→51999999 →58999999	Ate	epad	2413781	[–] 24137 16.7	
			Ate		2415501	[o] 24155 20.6	61000001→	Ate		82062900		
					98029100	L685	→48045597 →41048789	Ate		82503500		
			Ate		82029300				PRO	92118503	ø 278 x 12 x 41.5	
			Ate		82062900				PRO	92118403	ø 292 x 20 x 41.5	
				PRO	92118303	ø 302 x 28 x 45	⊕ police veh. ⊕ sports susp.					
				PRO	92118703	ø 285 x 25 x 41.9						
2.8	11/05→09/06	129000 188 / 256	Ate		2391202	[–] 23912 20.4		Ate		2413701	[–] 24137 16.7	
2.8	10/06→	184 / 250			98029700	L693	→48045597 →41048789 38047798→ 31070294→	Ate	epad	2413781	[–] 24137 16.7	
					98030100	L302	48045598→ 41048790→		PRO	92118403	ø 292 x 20 x 41.5	
				PRO	92118803	ø 314 x 28 x 44.9						
VENTURE 04/98→09/04													
3.4	04/98→09/04	129100 130 / 177	Wag		2335801	[+] 23358 18		Ake		2336101	[+] 23361 15	
VIVA 09/03→03/08													
1.8	09/03→03/08	129200 90 / 122	Ate		2383201	[+] 23832 19.6		Bos		2325803	[+] 23258 16.9	Bosch
1.8	09/03→03/08	92 / 125	Ate	epad	2383281	[+] 23832 19.6		Luc		2341703	[+] 23417 15.2	Lucas
					98023300	L720	⊕ on-board comp. ⊖ ABS	Luc		82060100		
					98029800	L750	⊖ elec. damp. susp.	Luc		82063300		
					98031400	L287	⊕ elec. damp. susp.	Bos		82063700		
			Ate		82032000		⊕ ABS		PRO	92092103	ø 264 x 10 x 42	⊕ ABS
			Ate		82062900					TPM0008		
				PRO	92091903	ø 280 x 25 x 42						
					TPM0007							
VIVANT 05/00→													
1.6	08/01→	129300 78 / 106	Ake		2323401	[+] 23234 16.9				91072000	ø 230 x 52	
1.8	05/00→	72 / 98										
2.0	08/00→	89 / 121	Ake		82508400					97033200		
2.0	08/02→	97 / 132										
					92133500	ø 256 x 24 x 47.5						
VIVANT 01/05→													
1.6	01/05→	129400 77 / 105	Ake		2323401	[+] 23234 16.9				91072000	ø 230 x 52	
2.0 CX	01/05→	89 / 121	Ake		82508400					97033200		
					92133500	ø 256 x 24 x 47.5						
VOLT 11/11→													
EV 150	11/11→	129500 111 / 151			2503401	[+] 25034 18.8				2509602	[+] 25096 16.2	
				epad	2503481	[+] 25034 18.8						
ZAFIRA (F75) 02/99→													
1.8	02/99→07/01	129600 81 / 110	Ate		2383201	[+] 23832 19.6		Bos		2325803	[+] 23258 16.9	Bosch
1.8	07/00→06/05	92 / 125										
2.0	04/01→	100 / 136	Ate	epad	2383281	[+] 23832 19.6		Luc		2341703	[+] 23417 15.2	Lucas
2.0	04/01→07/04	85 / 116										
2.0	08/04→	89 / 121			98029800	L750	⊖ elec. damp. susp.	Luc		82060100		
2.2	04/01→07/04	91 / 124			98031400	L287	⊕ elec. damp. susp.	Luc		82063300		

→

CHEVROLET

CHEVROLET

ZAFIRA (F75) 02/99→

		kW / hp												
		129600	Ate		82032000				Bos		82063700			
1.8	02/99→07/01	81 / 110												
1.8	07/00→06/05	92 / 125	Ate		82062900					PRO	92092103	⌀ 264 x 10 x 42		
2.0	04/01→	100 / 136												
2.0	04/01→07/04	85 / 116												
2.0	08/04→	89 / 121		PRO	92091903	⌀ 280 x 25 x 42								
2.2	04/01→07/04	91 / 124												

ZAFIRA 07/05→

		129700	Ate		2383201	[+] 23832	19.6		Luc		2341702	[–] 23417	15.2	
2.2	07/05→	110 / 150												
			Ate	epad	2383281	[+] 23832	19.6		Luc	epad	2341781	[–] 23417	15.2	
			Ate		82032000				Luc		82060100			
			Ate		82062900				Luc		82063300			
				PRO	92110903	⌀ 308 x 25 x 42				PRO	92092103	⌀ 264 x 10 x 42		

CHEVROLET (SGM)

CHEVROLET (SGM)

BLAZER Closed Off-Road Vehicle 01/02→02/04

		129800								PRO	92137903	⌀ 336 x 22 x 67		
4.3 All-wheel Drive	01/02→02/04	142 / 190								PRO	92154903	⌀ 300 x 20 x 66		

BLAZER Geländewagen geschlossen 01/02→02/04 → BLAZER Closed Off-Road Vehicle, Page 243

CHRYSLER

CHRYSLER

200 Cabriolet 09/10→ → 200 Convertible, Page 243

200 Convertible 09/10→

		129900	Ake		2358403	[+] 23584	16		Ake		2358202	[+] 23582	15.5	
3.6 Flexfuel	09/10→	211 / 287												

200 Saloon 09/10→

		130000	Ake		2358403	[+] 23584	16		Ake		2358202	[+] 23582	15.5	
3.6 Flexfuel	09/10→	211 / 287												

200 Stufenheck 09/10→ → 200 Saloon, Page 243

300 C (LX) 09/04→11/12

		130100	Bos		2416401	[+] 24164	17.8	⊕ sports susp.	Bos		2416301	[+] 24163	17.8	
2.7	09/04→11/12	142 / 193												
2.7	01/07→11/12	130 / 177	Bos		2416601	[+] 24166	18.8	⊖ sports susp.	Bos		82513700			
3.0 CRD	09/05→11/12	160 / 218												
3.5	09/04→11/12	183 / 249			82513600					PRO	92234803	⌀ 320 x 10 x 66.6	⊖ sports susp.	
3.5	01/05→12/10	186 / 253		PRO	92177103	⌀ 345 x 28 x 54.7		⊕ sports susp.		PRO	92177203	⌀ 320 x 22 x 67	⊕ sports susp. →12/08	
				PRO	92235403	⌀ 320 x 28 x 54.6		⊖ sports susp.		PRO	92235503	⌀ 350 x 26 x 65.5	⊕ sports susp. 01/09→	
											91057800	⌀ 183 x 31	⊕ sports susp.	
		130200	Bos		2416401	[+] 24164	17.8	⊕ sports susp.	Bos		2416301	[+] 24163	17.8	
3.0 V6 CRD	11/10→11/12	155 / 211												
			Bos		2416601	[+] 24166	18.8	⊖ sports susp.	Bos		82513700			
					82513600					PRO	92234803	⌀ 320 x 10 x 66.6	⊖ sports susp.	
				PRO	92177103	⌀ 345 x 28 x 54.7		⊕ sports susp.		PRO	92235503	⌀ 350 x 26 x 65.5	⊕ sports susp.	
				PRO	92235403	⌀ 320 x 28 x 54.6		⊖ sports susp.			91057800	⌀ 183 x 31	⊕ sports susp.	
		130300	Bos		2416401	[+] 24164	17.8		Bos		2416301	[+] 24163	17.8	
5.7	09/04→12/08	250 / 340												
5.7	12/09→11/12	256 / 348			82513600				Bos		82513700			
				PRO	92177103	⌀ 345 x 28 x 54.7					91057800	⌀ 183 x 31	⊕ sports susp.	
		130400	Bre		2407501	[+] 24075	17		Bre		2407601	[+] 24076	14.8	
6.1 SRT8	06/05→11/12	317 / 431												
					82513600				Bos		82513700			
				PRO	92177103	⌀ 345 x 28 x 54.7				PRO	92177203	⌀ 320 x 22 x 67		

CHRYSLER

CHRYSLER

		kW / hp											
300 C (LX) 09/04→11/12													
130400													
6.1 SRT8	06/05→11/12	317 / 431								91057800	ø 183 x 31		
300 C 09/11→													
130500			Bos		2416401	[+] 24164 17.8	⊕ sports susp.	Bos		2416301	[+] 24163 17.8	⊕ sports susp.	
3.0 CRD	09/11→	176 / 239	Bos		2416601	[+] 24166 18.8	⊖ sports susp.	Bos		2416301	[+] 24163 17.8	⊖ sports susp.	
				PRO	92177203	ø 345 x 28 x 54.7	⊕ sports susp.		PRO	92177203	ø 320 x 22 x 67	⊕ sports susp.	
				PRO	92235403	ø 320 x 28 x 54.6	⊖ sports susp.		PRO	92235503	ø 350 x 26 x 65.5	⊕ sports susp. 01/09→	
										91057800	ø 183 x 31	⊕ sports susp.	
300 C Saloon (LX) 09/04→11/12 → 300 C (LX), Page 243													
300 C Stufenheck (LX) 09/04→11/12 → 300 C (LX), Page 243													
300 C Touring (LX) 09/04→12/10													
130600			Bos		2416401	[+] 24164 17.8	⊕ sports susp.	Bos		2416301	[+] 24163 17.8		
2.7	09/04→12/10	142 / 193											
2.7	01/07→12/10	130 / 177											
3.5	09/04→12/10	183 / 249	Bos		2416601	[+] 24166 18.8	⊖ sports susp.	Bos		82513700			
3.5 AWD	09/04→12/10	183 / 249											
					82513600				PRO	92234803	ø 320 x 10 x 66.6	⊖ sports susp.	
				PRO	92177103	ø 345 x 28 x 54.7	⊕ sports susp.		PRO	92177203	ø 320 x 22 x 67	⊕ sports susp. →12/08	
				PRO	92235403	ø 320 x 28 x 54.6	⊖ sports susp.		PRO	92235503	ø 350 x 26 x 65.5	⊕ sports susp. 01/09→	
										91057800	ø 183 x 31	⊕ sports susp.	
130700			Bos		2416401	[+] 24164 17.8	⊕ Performance	Bos		2416301	[+] 24163 17.8		
3.0 CRD	09/05→12/10	160 / 218											
			Bos		2416601	[+] 24166 18.8		Bos		82513700			
					82513600				PRO	92234803	ø 320 x 10 x 66.6	⊖ sports susp.	
				PRO	92177103	ø 345 x 28 x 54.7	⊕ sports susp.		PRO	92177203	ø 320 x 22 x 67	⊕ sports susp. →12/08	
				PRO	92235403	ø 320 x 28 x 54.6	⊖ sports susp.		PRO	92235503	ø 350 x 26 x 65.5	⊕ sports susp. 01/09→	
										91057800	ø 183 x 31	⊕ sports susp.	
130800			Bos		2416401	[+] 24164 17.8		Bos		2416301	[+] 24163 17.8		
5.7	09/04→12/10	250 / 340											
5.7 AWD	04/05→12/10	250 / 340			82513600			Bos		82513700			
				PRO	92177103	ø 345 x 28 x 54.7	⊕ sports susp.		PRO	92234803	ø 320 x 10 x 66.6	⊖ sports susp.	
				PRO	92235403	ø 320 x 28 x 54.6	⊖ sports susp.		PRO	92177203	ø 320 x 22 x 67	⊕ sports susp. →12/08	
									PRO	92235503	ø 350 x 26 x 65.5	⊕ sports susp. 01/09→	
										91057800	ø 183 x 31		
130900			Bre		2407501	[+] 24075 17		Bre		2407601	[+] 24076 14.8		
6.1 SRT8	06/05→12/10	317 / 431											
					82513600			Bos		82513700			
				PRO	92177103	ø 345 x 28 x 54.7				91057800	ø 183 x 31		
300 M (LR) 07/98→09/04													
131000			Kel		2304301	[–] 23043 18.6		Kel		2356102	[–] 23561 17		
2.7 V6 24V	11/98→08/00	149 / 203											
2.7 V6 24V	08/00→09/04	150 / 204		PRO	92229903	ø 282 x 26 x 54	⊕ rim size 15"			91071900	ø 172 x 20		
3.5 V6 24V	07/98→08/00	187 / 254											
3.5 V6 24V	08/00→09/04	185 / 252		PRO	92230003	ø 297 x 26 x 54	⊕ rim size 16"						
300 M Saloon (LR) 07/98→09/04 → 300 M (LR), Page 244													
300 M Stufenheck (LR) 07/98→09/04 → 300 M (LR), Page 244													
CARAVAN 01/95→11/00													
131100			Kel		2304301	[–] 23043 18.6				91056000	ø 250 x 57		
2.4	01/95→11/00	110 / 150											
3.3	01/95→11/00	116 / 158			92108700	ø 282.5 x 23.7 x 38		Ben		97033900			
										94028100	ø 250 x 69		
CIRRUS (JR) 04/01→06/07 → SEBRING (JR), Page 247													
CIRRUS (JS) 07/07→12/10 → SEBRING (JS), Page 247													

		30 kW / hp										
CIRRUS 05/94→09/00												
		131200	Ben		2331801	[+] 23318 15.9		Kel		2356102	[–] 23561 17	
2.0 LX	10/97→09/00	98 / 133										
2.4	01/97→08/00	125 / 170										
2.4 LX	05/94→09/00	103 / 140										
2.5 LX	10/94→09/00	120 / 163										
CIRRUS 09/00→04/07												
		131300	Ate		2395101	[+] 23951 20.5	Teves	Kel		2356102	[–] 23561 17	Kelsey Hayes 09/02→
2.0	09/00→04/07	104 / 141										
2.4	09/00→04/07	112 / 152						Ake		2170602	[+] 21706 15.5	Akebono
CIRRUS Cabriolet (JR) 04/01→06/07 → SEBRING Convertible (JR), Page 247												
CIRRUS Cabriolet (JS) 07/07→12/10 → SEBRING Convertible (JS), Page 247												
CIRRUS Descapotable (JS) 07/07→12/10 → SEBRING Convertible (JS), Page 247												
CIRRUS Saloon 05/94→09/00 → CIRRUS, Page 245												
CIRRUS Stufenheck 05/94→09/00 → CIRRUS, Page 245												
CONCORDE 10/97→09/03												
		131400	Kel		2304301	[–] 23043 18.6		Kel		2356102	[–] 23561 17	
2.7 LX	10/97→09/03	149 / 203										
3.5 LX	10/97→09/03	174 / 237		PRO	92229903	ø 282 x 26 x 54	⊕ rim size 15"			91071900	ø 172 x 20	
3.5 LX Supercharged	10/97→09/03	186 / 253		PRO	92230003	ø 297 x 26 x 54	⊕ rim size 16"					
CONCORDE Saloon 10/97→09/03 → CONCORDE, Page 245												
CONCORDE Stufenheck 10/97→09/03 → CONCORDE, Page 245												
CROSSFIRE 07/03→12/07												
		131500	Ate		2167001	[o] 21670 20.3		Ate		2191903	[–] 21919 15.7	
3.2	07/03→12/07	160 / 218	Ate	epad	2167081	[o] 21670 20.3				98021300	L90	
					98021300	L90				98021301	L90	
					98021301	L90		Ate		82058800		
			Ate		82032000				PRO	92032703	ø 278 x 9 x 53.5	
			Ate		82062900					91057100	ø 164 x 20	
				PRO	92106003	ø 300 x 28 x 46.5						
				PRO	92106005	ø 300 x 28 x 46.5						
		131600	Ate		2148401	[o] 21484 20.8		Ate		2130504	[o] 21305 15.5	
SRT-6	09/04→12/07	246 / 335			98021300	L90		Ate	epad	2130581	[o] 21305 15.5	
					98021301	L90				98021300	L90	
			Ate		82032000					98021301	L90	
			Ate		82062900			Ate		82032800		
				PRO	92181903	ø 330 x 32 x 47			PRO	92137203	ø 300 x 22 x 53.6	
										91057100	ø 164 x 20	
CROSSFIRE Roadster 05/04→12/07												
		131700	Ate		2167001	[o] 21670 20.3		Ate		2191903	[–] 21919 15.7	
3.2	05/04→12/07	160 / 218	Ate	epad	2167081	[o] 21670 20.3				98021300	L90	
					98021300	L90				98021301	L90	
					98021301	L90		Ate		82058800		
			Ate		82032000				PRO	92032703	ø 278 x 9 x 53.5	
			Ate		82062900					91057100	ø 164 x 20	
				PRO	92106003	ø 300 x 28 x 46.5						
				PRO	92106005	ø 300 x 28 x 46.5						
		131800	Ate		2148401	[o] 21484 20.8		Ate		2130504	[o] 21305 15.5	
SRT-6	09/04→12/06	246 / 335			98021300	L90		Ate	epad	2130581	[o] 21305 15.5	

CHRYSLER

CHRYSLER

		kW / hp											
CROSSFIRE Roadster 05/04→12/07													
131800													
SRT-6	09/04→12/06	246 / 335		98021301	L90			98021300	L90				
			Ate	82032000				98021301	L90				
			Ate	82062900			Ate	82032800					
			PRO	92181903	ø 330 x 32 x 47		PRO	92137203	ø 300 x 22 x 53.6				
								91057100	ø 164 x 20				
DELTA 08/11→													
131900			Bos	2370802	[+] 23708 19		Bos	2371401	[–] 23714 15.5				
1.4	08/11→	88 / 120											
1.6 D Multijet	08/11→	88 / 120	Bos	2370881	[+] 23708 19		Bos	2371481	[–] 23714 15.5				
			Bos	82054200			Bos	82054300					
			PRO	92053503	ø 284 x 22 x 43.5		PRO	92034203	ø 251 x 10 x 50.5				
132000			Bos	2371104	[+] 23711 19.4		Bos	2371401	[–] 23714 15.5				
1.4 16V	08/11→	103 / 140	Bos	82054200			Bos	2371481	[–] 23714 15.5				
			PRO	92107703	ø 281 x 26 x 43.5		Bos	82054300					
							PRO	92034203	ø 251 x 10 x 50.5				
132100			Ate	2472701	[+] 24727 20		Bos	2371401	[–] 23714 15.5				
2.0 D Multijet	08/11→	121 / 165	Ate	82076900			Bos	2371481	[–] 23714 15.5				
							Bos	82054300					
							PRO	92034203	ø 251 x 10 x 50.5				
GRAND VOYAGER III (GS) 01/95→03/01 → VOYAGER III (GS), Page 248													
GRAND VOYAGER IV (RG, RS) 02/00→12/08 → VOYAGER IV (RG, RS), Page 249													
GRAND VOYAGER V (RT) 10/07→													
132200			Bos	2460401	[+] 24604 18.5	BR3 -brake BR4 -brake BRE -brake BRG -brake	Luc	2482201	[+] 24822 17	→MY 2011 BRE -brake BRG -brake BR3 -brake BR4 -brake			
2.8 CRD	10/07→	120 / 163								MY 2012→ BRE -brake			
2.8 CRD	10/07→	120 / 163	Ake	2537801	[+] 25378 18.1	MY 2012→ BR3 -brake	TRW	2537601	[+] 25376 17.6	MY 2012→ BR3 -brake			
3.8	10/07→	142 / 193	Luc	82060200		→MY 2011 / MY 2012→ BRE -brake	Luc	82060200					
132300			Bos	2460401	[+] 24604 18.5	BR3 -brake BR4 -brake BRE -brake BRG -brake	Luc	2482201	[+] 24822 17	⊕ rear disc brake →MY 2011 BRE -brake BRG -brake BR3 -brake BR4 -brake			
3.3	01/08→	125 / 170	Ake	2537801	[+] 25378 18.1	MY 2012→ BR3 -brake				MY 2012→ BRE -brake			
			Luc	82060200		→MY 2011 / MY 2012→ BRE -brake	TRW	2537601	[+] 25376 17.6	⊕ rear disc brake MY 2012→ BR3 -brake			
							Luc	82060200		⊕ rear disc brake			
								91056000	ø 250 x 57	⊕ rear drum brake			
								94028100	ø 250 x 69	⊕ rear drum brake			
NEON (PL) 05/94→09/00													
132400			Kel	2304301	[–] 23043 18.6		Kel	2356102	[–] 23561 17	⊕ ABS			
1.8 16V	09/97→08/99	85 / 116											
2.0	10/96→09/00	118 / 160	Kel	2374001	[–] 23740 15.5			91063800	ø 200 x 34	⊖ ABS			
2.0 16V	05/94→08/99	98 / 133											
2.0 16V	06/94→08/99	107 / 145											
2.0 16V	04/96→08/99	109 / 148	PRO	92152403	ø 257 x 20 x 38			92108600	ø 270 x 9 x 53.3	⊕ ABS			
NEON II 08/99→09/05													
132500			Kel	2304301	[–] 23043 18.6		Kel	2356102	[–] 23561 17				
1.6	11/01→12/06	85 / 116											
1.8	01/00→	91 / 124											
2.0 16V	08/99→12/06	98 / 133	PRO	92152403	ø 257 x 20 x 38			92108600	ø 270 x 9 x 53.3				
2.0 16V	10/02→12/06	97 / 131											
2.0 16V R/T	10/01→12/06	110 / 150											
132600			Luc	2353202	[+] 23532 20		Kel	2356102	[–] 23561 17				
2.4	10/01→09/05	160 / 218		82512100									
NEON II Saloon 08/99→09/05 → NEON II, Page 246													
NEON II Stufenheck 08/99→09/05 → NEON II, Page 246													
NEON Mk II 08/99→09/05 → NEON II, Page 246													

kW / hp

NEON Saloon (PL) 05/94→09/00 → NEON (PL), Page 246

NEON Stufenheck (PL) 05/94→09/00 → NEON (PL), Page 246

PT CRUISER (PT_) 06/00→12/10

		132700	Luc		2353202	[+] 23532 20		Kel		2356102	[–] 23561 17	⊕ ABS ⊕ rear disc brake
1.6	11/01→12/10	85 / 116										
2.0	06/00→12/10	104 / 141			82512100					91064200	ø 220 x 42	⊖ ABS ⊕ rear drum brake
2.0	10/04→12/10	100 / 136										
2.2 CRD	03/02→12/10	89 / 121			92108500	ø 280 x 23 x 39.2	⊖ perform. brk. sys.			92108600	ø 270 x 9 x 53.3	⊕ ABS ⊖ perform. brk. sys. ⊕ rear disc brake
2.2 CRD	08/05→12/10	110 / 150										
2.4	06/00→12/10	110 / 150										
2.4	09/04→12/10	169 / 230		PRO	92108503	ø 280 x 23 x 39.2	⊖ perform. brk. sys.			91071900	ø 172 x 20	⊕ ABS ⊕ rear drum brake
2.4	08/05→12/10	105 / 143										
GT 2.4	08/03→12/10	164 / 223								97036400		⊕ ABS ⊕ rear drum brake

PT CRUISER Cabriolet 03/04→03/08 → PT CRUISER Convertible, Page 247

PT CRUISER Convertible 03/04→03/08

		132800	Luc		2353202	[+] 23532 20		Kel		2356102	[–] 23561 17	⊕ ABS ⊕ rear disc brake
2.4	03/04→03/08	105 / 143										
2.4 GT	03/04→03/08	164 / 223			82512100					91064200	ø 220 x 42	⊖ ABS ⊕ rear drum brake
					92108500	ø 280 x 23 x 39.2	⊖ perform. brk. sys.			92108600	ø 270 x 9 x 53.3	⊕ ABS ⊖ perform. brk. sys. ⊕ rear disc brake
				PRO	92108503	ø 280 x 23 x 39.2	⊖ perform. brk. sys.			91071900	ø 172 x 20	⊕ ABS ⊕ rear drum brake
										97036400		⊕ ABS ⊕ rear drum brake

PT CRUISER Estate (PT_) 06/00→12/10 → PT CRUISER (PT_), Page 247

PT CRUISER Kombi (PT_) 06/00→12/10 → PT CRUISER (PT_), Page 247

SEBRING (JR) 04/01→06/07

		132900	Ate		2395101	[+] 23951 20.5	Teves	Kel		2356102	[–] 23561 17	Kelsey Hayes 09/02→ ⊕ rear disc brake
2.0	04/01→06/07	104 / 141										
2.4	04/01→06/07	105 / 143						Ake		2170602	[+] 21706 15.5	Akebono ⊕ rear disc brake
2.4	04/01→06/07	112 / 152										
2.7 V6 24V	04/01→06/07	149 / 203								92108600	ø 270 x 9 x 53.3	⊕ rear disc brake
										91071900	ø 172 x 20	⊕ rear disc brake
		133000	Ate		2395101	[+] 23951 20.5		Kel		2356102	[–] 23561 17	
2.4 Turbo	09/01→06/07	164 / 223										

SEBRING (JS) 07/07→12/10

		133100	Ake		2358403	[+] 23584 16	⊕ EU	Ake		2358202	[+] 23582 15.5	⊕ ABS BRG -brake
2.0 CRD	07/07→12/10	103 / 140										
2.0 VVT	07/07→12/10	115 / 156	Ake		2458301	[+] 24583 17	⊖ EU	Ake		2401401	[+] 24014 15.4	BRF -brake
2.4 VVT	07/07→12/10	125 / 170										
2.7 VVT	07/07→09/10	137 / 186										
2.7 VVT	07/07→12/10	141 / 192		PRO	92184403	ø 294 x 26.1 x 46				91076800	ø 228.6 x 37	⊖ ABS
3.5 AWD	11/07→12/10	175 / 238							PRO	92177303	ø 302 x 10 x 60.5	⊕ ABS BRG -brake
										94036300	ø 228,5 x 46	⊖ ABS ⊕ rear drum brake
										91073400	ø 170 x 32	⊕ ABS

SEBRING Cabriolet (JR) 04/01→06/07 → SEBRING Convertible (JR), Page 247

SEBRING Cabriolet (JS) 07/07→12/10 → SEBRING Convertible (JS), Page 247

SEBRING Convertible (JR) 04/01→06/07

		133200	Ate		2395101	[+] 23951 20.5	Teves	Kel		2356102	[–] 23561 17	Kelsey Hayes 09/02→
2.0	04/01→06/07	104 / 141										
2.4	04/01→06/07	112 / 152						Ake		2170602	[+] 21706 15.5	Akebono
2.7 V6 24V	04/01→06/07	149 / 203										
		133300	Ate		2395101	[+] 23951 20.5		Kel		2356102	[–] 23561 17	
2.4 Turbo	09/01→06/07	164 / 223										

SEBRING Convertible (JS) 07/07→12/10

		133400	Ake		2358403	[+] 23584 16		Ake		2358202	[+] 23582 15.5	⊕ ABS
2.0 CRD	07/07→12/10	103 / 140										
2.4 VVT	07/07→12/10	125 / 170		PRO	92184403	ø 294 x 26.1 x 46				91076800	ø 228.6 x 37	⊖ ABS
2.7 VVT	07/07→12/10	141 / 192							PRO	92177303	ø 302 x 10 x 60.5	⊕ ABS
										94036300	ø 228,5 x 46	⊖ ABS
										91073400	ø 170 x 32	⊕ ABS
		133500	Ake		2358403	[+] 23584 16		Ake		2358202	[+] 23582 15.5	
2.7	07/07→12/10	137 / 186										
				PRO	92184403	ø 294 x 26.1 x 46				91076800	ø 228.6 x 37	⊖ ABS

CHRYSLER

CHRYSLER

		kW / hp												
SEBRING Convertible (JS) 07/07→12/10														
		133500								PRO	92177303	ø 302 x 10 x 60.5	⊕ ABS	
2.7	07/07→12/10	137 / 186									94036300	ø 228,5 x 46	⊖ ABS	
											91073400	ø 170 x 32	⊕ ABS	
SEBRING Coupe (FJ) 05/95→09/00														
		133600	Sum		2164701	[+] 21647 16			Ake		2170602	[+] 21706 15.5		
2.5 LE	05/95→09/00	120 / 163												
SEBRING Saloon (JR) 04/01→06/07 → SEBRING (JR), Page 247														
SEBRING Saloon (JS) 07/07→12/10 → SEBRING (JS), Page 247														
SEBRING Stufenheck (JR) 04/01→06/07 → SEBRING (JR), Page 247														
SEBRING Stufenheck (JS) 07/07→12/10 → SEBRING (JS), Page 247														
STRATUS (JA) 12/95→04/01														
		133700	Ben		2331801	[+] 23318 15.9								
2.0 16V	12/95→04/01	98 / 133												
2.0 LE	12/95→04/01	96 / 131												
2.4	09/00→04/01	164 / 223												
2.4 16V	12/95→04/01	112 / 152												
2.4 16 V	12/95→04/01	103 / 140												
		133800	Ben		2331801	[+] 23318 15.9			Kel		2356102	[–] 23561 17		
2.5 LX V6	12/95→04/01	120 / 163												
2.5 V6	12/95→04/01	125 / 170												
STRATUS Cabriolet (JX) 04/96→04/01 → STRATUS Convertible (JX), Page 248														
STRATUS Convertible (JX) 04/96→04/01														
		133900	Ben		2331801	[+] 23318 15.9								
2.0 LE	06/96→04/01	96 / 131												
		134000	Ben		2331801	[+] 23318 15.9			Kel		2356102	[–] 23561 17		
2.5 LX	04/96→04/01	120 / 163												
STRATUS Saloon (JA) 12/95→04/01 → STRATUS (JA), Page 248														
STRATUS Stufenheck (JA) 12/95→04/01 → STRATUS (JA), Page 248														
TOWN & COUNTRY IV (RG, RS) 02/00→12/08 → VOYAGER IV (RG, RS), Page 249														
TOWN & COUNTRY V (RT) 10/07→ → GRAND VOYAGER V (RT), Page 246														
TOWN & COUNTRY 10/00→08/07														
		134100	Ate		2380701	[–] 23807 18.5			Kel		2403601	[–] 24036 16		
3.3	10/00→08/07	128 / 174			92108200	ø 302 x 28 x 39	⊕ rim size 16"				91056000	ø 250 x 57		
					92108300	ø 281 x 28 x 38	⊕ rim size 15"		Ben		97033900			
											92108400	ø 290 x 12.5 x 56		
		134200	Ate		2380701	[–] 23807 18.5			Kel		2403601	[–] 24036 16		
3.8	10/00→09/06	160 / 218			92108200	ø 302 x 28 x 39	⊕ rim size 16"				91056000	ø 250 x 57		
3.8 AWD	10/00→08/07	160 / 218			92108300	ø 281 x 28 x 38	⊕ rim size 15"		Ben		97033900			
				PRO	92181503	ø 302 x 28 x 38.2					92108400	ø 290 x 12.5 x 56		
VOYAGER III (GS) 01/95→03/01														
		134300	Kel		2304301	[–] 23043 18.6	10/96→		Kel		2356102	[–] 23561 17	⊕ ABS →09/96 ⊕ rear disc brake	
2.0 i	01/95→03/01	98 / 133												
2.4 i	01/95→03/01	111 / 151	Kel		2495301	[–] 24593 16.5	→09/96		Kel		2403601	[–] 24036 16	01/98→ ⊕ rear disc brake	
2.5 TD	01/95→03/01	85 / 116												
3.0	01/95→03/01	112 / 152												
3.3 i	01/95→03/01	116 / 158			92108700	ø 282.5 x 23.7 x 38			Kel		2510801	[–] 25108 15.9	10/96→ →12/97 ⊕ rear disc brake	
											91056000	ø 250 x 57	⊕ rear drum brake	
									Ben		97033900		⊕ rear drum brake	
											92108400	ø 290 x 12.5 x 56	⊕ rear disc brake	
											94028100	ø 250 x 69	⊕ rim size 15" ⊕ rear drum brake	
											91069600	ø 180 x 30	⊕ rear disc brake	
		134400	Kel		2304301	[–] 23043 18.6	→12/98		Kel		2510801	[–] 25108 15.9	⊕ ABS →12/97 ⊕ rear disc brake	
2.4 AWD	02/97→03/01	111 / 151												
			Ate		2380701	[–] 23807 18.5	01/99→				91056000	ø 250 x 57	⊕ rear drum brake	
					92108700	ø 282.5 x 23.7 x 38			Ben		97033900		⊕ rear drum brake	
											92108400	ø 290 x 12.5 x 56	⊕ rear disc brake	

→

		kW / hp										
VOYAGER III (GS) 01/95→03/01												
		134400								**94028100**	ø 250 x 69	⊕ rim size 15" ⊕ rear drum brake
2.4 AWD	02/97→03/01	111 / 151								**91069600**	ø 180 x 30	⊕ rear disc brake
		134500	Kel	**2304301**	[–] 23043 18.6	10/96→ →12/98	Kel	**2356102**	[–] 23561 17	⊕ ABS →09/96 ⊕ rear disc brake
2.5 TDiC AWD	10/95→03/01	85 / 116								
3.8 i AWD	01/95→03/01	122 / 166	Ate	**2380701**	[–] 23807 18.5	01/99→	Kel	**2510801**	[–] 25108 15.9	⊕ ABS 10/96→ →12/97 ⊕ rear disc brake
3.8 i AWD	01/95→03/01	131 / 178								
			Kel	**2495301**	[–] 24593 16.5	→09/96		**91056000**	ø 250 x 57	⊕ rear drum brake
				92108700	ø 282.5 x 23.7 x 38		Ben	**97033900**		⊕ rear drum brake
								92108400	ø 290 x 12.5 x 56	⊕ rear disc brake
								94028100	ø 250 x 69	⊕ rim size 15" ⊕ rear drum brake
								91069600	ø 180 x 30	⊕ rear disc brake
		134600	Kel	**2304301**	[–] 23043 18.6	10/96→	Kel	**2356102**	[–] 23561 17	⊕ ABS →09/96
3.3 i	01/95→03/01	134 / 180								
			Kel	**2495301**	[–] 24593 16.5	→09/96		**91056000**	ø 250 x 57	
				92108700	ø 282.5 x 23.7 x 38		Ben	**97033900**		
								94028100	ø 250 x 69	⊕ rim size 15"
VOYAGER IV (RG, RS) 02/00→12/08												
		134700	Ate	**2380701**	[–] 23807 18.5		Kel	**2403601**	[–] 24036 16	⊕ rear disc brake
2.4	02/00→12/08	108 / 147								
				92108200	ø 302 x 28 x 39			**91056000**	ø 250 x 57	⊕ rear drum brake
								92108400	ø 290 x 12.5 x 56	⊕ rear disc brake
								94028100	ø 250 x 69	⊕ rear drum brake
								91069600	ø 180 x 30	⊕ rear disc brake
								97036500		⊕ rear disc brake
		134800	Ate	**2380701**	[–] 23807 18.5	10/02→ ⊕ rim size 16"	Kel	**2403601**	[–] 24036 16	⊕ rear disc brake
2.5 CRD	02/00→12/08	105 / 141								
			Luc	**2363801**	[+] 23638 17.5	⊕ rim size 15" →09/02		**91056000**	ø 250 x 57	⊕ rear drum brake
			Ate	**2364001**	[+] 23640 18	⊕ rim size 15" →09/02	Ben	**97033900**		
				92108200	ø 302 x 28 x 39	⊕ rim size 16"		**92108400**	ø 290 x 12.5 x 56	⊕ rear disc brake
				92108300	ø 281 x 28 x 38	⊕ rim size 15"		**94028100**	ø 250 x 69	⊕ rear drum brake
				92181503 PRO	ø 302 x 28 x 38.2			**91069600**	ø 180 x 30	⊕ rear disc brake
								97036500		⊕ rear disc brake
		134900	Ate	**2380701**	[–] 23807 18.5		Kel	**2403601**	[–] 24036 16	
2.5 CRD	08/05→12/08	88 / 120								
				92108200	ø 302 x 28 x 39	⊕ rim size 16"		**91056000**	ø 250 x 57	
				92108300	ø 281 x 28 x 38	⊕ rim size 15"	Ben	**97033900**		
				92181503 PRO	ø 302 x 28 x 38.2			**92108400**	ø 290 x 12.5 x 56	
								91069600	ø 180 x 30	
								97036500		
		135000	Ate	**2380701**	[–] 23807 18.5	⊕ rim size 16"	Kel	**2403601**	[–] 24036 16	
2.8 CRD	06/04→12/08	110 / 150								
			Ate	**2364001**	[+] 23640 18	⊕ rim size 15"		**92108400**	ø 290 x 12.5 x 56	
				92108200	ø 302 x 28 x 39	⊕ rim size 16"		**91069600**	ø 180 x 30	
				92108300	ø 281 x 28 x 38	⊕ rim size 15"		**97036500**		
		135100	Ate	**2380701**	[–] 23807 18.5	⊕ ABS	Kel	**2403601**	[–] 24036 16	10/02→ ⊕ rear disc brake
3.3	02/00→12/08	128 / 174								
			Ate	**2364001**	[+] 23640 18	⊖ ABS		**91056000**	ø 250 x 57	⊕ rear drum brake
				92108200	ø 302 x 28 x 39	⊕ ABS		**92108400**	ø 290 x 12.5 x 56	⊕ rear disc brake

CHRYSLER

CHRYSLER

VOYAGER IV (RG, RS) 02/00→12/08

135100														
3.3	02/00→12/08	128 / 174			92108300	ø 281 x 28 x 38	⊖ ABS			94028100	ø 250 x 69	⊕ rear drum brake
				PRO	92181503	ø 302 x 28 x 38.2				91069600	ø 180 x 30	⊕ rear disc brake
										97036500		⊕ rear disc brake
135200			Ate		2380701	[–] 23807 18.5	Teves	Kel		2403601	[–] 24036 16	
3.3 AWD	02/00→12/08	128 / 174	Luc		2363801	[+] 23638 17.5	⊕ rim size 15"			92108400	ø 290 x 12.5 x 56	
			Ate		2364001	[+] 23640 18	⊕ rim size 16"			91069600	ø 180 x 30	
					92108200	ø 302 x 28 x 39	⊕ ABS			97036500		
					92108300	ø 281 x 28 x 38	⊖ ABS					
				PRO	92181503	ø 302 x 28 x 38.2						
135300			Ate		2380701	[–] 23807 18.5	⊕ ABS	Kel		2403601	[–] 24036 16	10/02→
3.3 Flex-Fuel	02/00→12/08	128 / 174	Ate		2364001	[+] 23640 18	⊖ ABS			92108400	ø 290 x 12.5 x 56	
					92108200	ø 302 x 28 x 39	⊕ ABS			91069600	ø 180 x 30	
										97036500		
135400			Ate		2380701	[–] 23807 18.5	Teves	Kel		2403601	[–] 24036 16	⊕ rear disc brake
3.8	02/00→12/08	160 / 218	Luc		2363801	[+] 23638 17.5	⊕ rim size 15"			91056000	ø 250 x 57	⊕ rear drum brake
			Ate		2364001	[+] 23640 18	⊕ rim size 16"			92108400	ø 290 x 12.5 x 56	⊕ rear disc brake
					92108200	ø 302 x 28 x 39	⊕ ABS			94028100	ø 250 x 69	⊕ rear drum brake
					92108300	ø 281 x 28 x 38	⊖ ABS			91069600	ø 180 x 30	⊕ rear disc brake
										97036500		⊕ rear disc brake
135500			Ate		2380701	[–] 23807 18.5	Teves	Kel		2403601	[–] 24036 16	⊕ rear disc brake
3.8 AWD	02/00→12/08	160 / 218	Luc		2363801	[+] 23638 17.5	Lucas			91056000	ø 250 x 57	⊕ rear drum brake
					92108200	ø 302 x 28 x 39	⊕ ABS			92108400	ø 290 x 12.5 x 56	⊕ rear disc brake
					92108300	ø 281 x 28 x 38	⊖ ABS			94028100	ø 250 x 69	⊕ rear drum brake
										91069600	ø 180 x 30	⊕ rear disc brake
										97036500		⊕ rear disc brake

VOYAGER Mk II (GS) 01/95→03/01 → VOYAGER III (GS), Page 248

VOYAGER Mk III (RG, RS) 02/00→12/08 → VOYAGER IV (RG, RS), Page 249

YPSILON 05/11→

135600												
0.9 Twinair	05/11→	63 / 86	Ate		2532301	[+] 25323 17.3			91065300	ø 203.2 x 38	
1.3 Multijet	05/11→	70 / 95	Ate		82029200						
135700			Ate		2532301	[+] 25323 17.3			91065300	ø 203.2 x 38	
1.2	05/11→	51 / 69	Ate		82029200						
				PRO	92236703	ø 257 x 12 x 40.5					
				PRO	92252803	ø 284 x 22 x 43.3					

CITROËN

CITROËN

AIRCROSS 08/10→ → C4 AIRCROSS, Page 265

BERLINGO (MF) 07/96→10/05

135800											
1.1 i (MFHDZ, MFHFX)	07/96→	44 / 60	Luc	2334602	[–] 23346 19.3	Lucas vented disc Orga 9128→ 2001-11-04→	Luc	91052900	ø 228.6 x 41.5	
1.4 i (MFKFX, MFKFW)	07/96→	55 / 75								
1.6 16V (MFNFU)	10/00→	80 / 109	Bos	2410101	[–] 24101 19	Bosch vented disc Orga 9128→ 2001-11-04→	Luc	97012000		
1.8 D (MFA9A)	07/98→	43 / 58								
1.8 i (MFLFX)	05/97→	66 / 90					Luc	84052900	bore ø 22.2 ø 228.6 x 41.5	
1.8 i 4WD (MFLFX)	04/97→	66 / 90								

→

BERLINGO (MF) 07/96→10/05

		kW / hp										
1.9 D (MFDJY)	07/96→	50 / 68	Gir		2312401	[+] 23124 19.3	solid disc			TPM0012		
1.9 D (MFWJZ)	07/98→	51 / 70					Girling vented disc →Orga 9127 →2001-11-03					
1.9 D 4WD (MFWJZ)	07/98→	51 / 69	Bos		82054200					94010300	ø 229,0 x 50.5	
2.0 HDI 90 (MFRHY)	12/99→	66 / 90	Luc		82063300							
Electric	01/98→	28 / 38	Bos		82063800							
			Bos		82510100							
					92089103	ø 266 x 13 x 27.2	Girling					
					92048103	ø 266 x 20.5 x 27.4	Girling/Lucas →Orga 10983 →2006-12-04					
					92111503	ø 266 x 22 x 34	Bosch Orga 9128→ 2001-11-04→ Lucas Orga 10984→ 2006-12-04→					
					TPM0012							
		135900	Luc		2334602	[–] 23346 19.3	Lucas vented disc	Luc		91052900	ø 228.6 x 41.5	
1.4	11/02→10/05	53 / 72	Bos		2410101	[–] 24101 19	Bosch vented disc	Luc		97012000		
			Gir		2312401	[+] 23124 19.3	solid disc	Luc		84052900	bore ø 22.2 ø 228.6 x 41.5	
			Bos		82054200					TPM0012		
			Luc		82063300					94010300	ø 229,0 x 50.5	
			Bos		82063800							
			Bos		82510100							
					92089103	ø 266 x 13 x 27.2	Girling					
					92048103	ø 266 x 20.5 x 27.4	Lucas					
					92111503	ø 266 x 22 x 34	Bosch					
					TPM0012							
		136000	Luc		2334602	[–] 23346 19.3	Lucas vented disc	Luc		91052900	ø 228.6 x 41.5	
1.4 bivalent	11/02→	48 / 65	Bos		2410101	[–] 24101 19	Bosch vented disc	Luc		97012000		
			Gir		2312401	[+] 23124 19.3	solid disc	Luc		84052900	bore ø 22.2 ø 228.6 x 41.5	
			Bos		82054200					TPM0012		
			Luc		82063300					94010300	ø 229,0 x 50.5	
			Bos		82063800							
			Bos		82510100							
					92089103	ø 266 x 13 x 27.2	Girling					
					92048103	ø 266 x 20.5 x 27.4	Lucas →Orga 10983 →2006-12-04					
					92111503	ø 266 x 22 x 34	Bosch Lucas Orga 10984→ 2006-12-04→					
					TPM0012		solid disc					
		136100	Luc		2334602	[–] 23346 19.3	Lucas vented disc	Luc		91052900	ø 228.6 x 41.5	
1.4 GNC	11/02→	48 / 65										
1.4 Hybrid	05/05→	54 / 73	Bos		2410101	[–] 24101 19	Bosch vented disc	Luc		97012000		
1.4 i bivalent (MFKFW)	04/03→	55 / 75										
1.6 16V (MFNFU)	11/02→	81 / 110	Gir		2312401	[+] 23124 19.3	solid disc	Luc		84052900	bore ø 22.2 ø 228.6 x 41.5	
1.6 HDI 110	08/05→	80 / 109										
1.6 HDI 75 (MF9HW)	07/05→	55 / 75	Bos		82054200					TPM0012		
1.6 HDI 90 (MF9HX)	07/05→	66 / 90	Luc		82063300					94010300	ø 229,0 x 50.5	
			Bos		82063800							
			Bos		82510100							
					92089103	ø 266 x 13 x 27.2	Girling					

CITROËN

CITROËN

kW / hp

BERLINGO (MF) 07/96→10/05

		136100		PRO	92048103	ø 266 x 20.5 x 27.4	Lucas →Orga 10983 →2006-12-04					
1.4 GNC	11/02→	48 / 65		PRO	92111503	ø 266 x 22 x 34	Bosch					
1.4 Hybrid	05/05→	54 / 73					Lucas Orga 10984→ 2006-12-04→					
1.4 i bivalent (MFKFW)	04/03→	55 / 75			TPM0012							
1.6 16V (MFNFU)	11/02→	81 / 110										
1.6 HDI 110	08/05→	80 / 109										
1.6 HDI 75 (MF9HW)	07/05→	55 / 75										
1.6 HDI 90 (MF9HX)	07/05→	66 / 90										
		136200	Gir		2312401	[+] 23124 19.3		Luc		91052900	ø 228.6 x 41.5	
1.8 D	11/96→10/99	44 / 60	Luc		82063300			Luc		97012000		
1.9 D (MFDJY)	07/96→10/99	51 / 69		PRO	92089103	ø 266 x 13 x 27.2		Luc		84052900	bore ø 22.2 ø 228.6 x 41.5	
				PRO	92048103	ø 266 x 20.5 x 27.4				94010300	ø 229,0 x 50.5	
		136300	Luc		2334602	[–] 23346 19.3	Lucas vented disc	Luc		91052900	ø 228.6 x 41.5	
2.0 HDi 4x4 (MFRHY)	11/02→10/05	66 / 90	Bos		2410101	[–] 24101 19	Bosch vented disc	Luc		97012000		
			Gir		2312401	[+] 23124 19.3	solid disc	Luc		84052900	bore ø 22.2 ø 228.6 x 41.5	
			Bos		82054200					94010300	ø 229,0 x 50.5	
			Luc		82063300							
			Bos		82063800							
			Bos		82510100							
				PRO	92089103	ø 266 x 13 x 27.2	Girling					
				PRO	92048103	ø 266 x 20.5 x 27.4	Lucas					
				PRO	92111503	ø 266 x 22 x 34	Bosch					
		136400	Luc		2334602	[–] 23346 19.3	Lucas vented disc Orga 9128→ 2001-11-04→	Luc		91052900	ø 228.6 x 41.5	
electrique	01/00→	16 / 22	Bos		2410101	[–] 24101 19	Bosch vented disc Orga 9128→ 2001-11-04→	Luc		97012000		
			Gir		2312401	[+] 23124 19.3	solid disc	Luc		84052900	bore ø 22.2 ø 228.6 x 41.5	
							Girling vented disc →Orga 9127 →2001-11-03					
			Bos		82054200					94010300	ø 229,0 x 50.5	
			Luc		82063300							
			Bos		82063800							
			Bos		82510100							
				PRO	92089103	ø 266 x 13 x 27.2	Girling					
				PRO	92048103	ø 266 x 20.5 x 27.4	Girling/Lucas →Orga 10983 →2006-12-04					
				PRO	92111503	ø 266 x 22 x 34	Bosch Orga 9128→ 2001-11-04→					
							Lucas Orga 10984→ 2006-12-04→					

BERLINGO I Box (M_) 07/96→12/03 → BERLINGO Box (M_), Page 253

BERLINGO I Kasten (M_) 07/96→12/03 → BERLINGO Box (M_), Page 253

BERLINGO 04/08→12/11

		136500	Ate		2453801	[–] 24538 18.8		Luc		2476501	[–] 24765 16.6	
1.6	04/08→	66 / 90										
1.6 HDi 110	04/08→	80 / 109	Ate		82032000			Luc		82075400		
1.6 HDi 110	07/10→	82 / 112										
1.6 HDi 115	07/10→	84 / 114	Ate		82062900			Luc		82063300		
1.6 HDi 75	04/08→	55 / 75										
1.6 HDi 90	07/10→	68 / 92										
1.6 VTi 120	11/09→	88 / 120		PRO	92111603	ø 283 x 26 x 34			ABS	92168700	ø 268 x 12 x 73.2	
1.6 VTi 95	07/10→	72 / 98										
					TPM0012					TPM0012		
		136600	Ate		2453801	[–] 24538 18.8		Luc		2476501	[–] 24765 16.6	⊕ rear disc brake
1.6	04/08→	80 / 109										
1.6 HDi 90	04/08→	66 / 90	Ate		82032000			Luc		82075400		⊕ rear disc brake
			Ate		82062900			Luc		82063300		⊕ rear disc brake
				PRO	92111603	ø 283 x 26 x 34		Luc		91052900	ø 228.6 x 41.5	⊕ rear drum brake

→

		kW / hp									
BERLINGO 04/08→12/11											
136600				TPM0012				92168700	ø 268 x 12 x 73.2	⊕ rear disc brake	
1.6	04/08→	80 / 109						TPM0012			
1.6 HDi 90	04/08→	66 / 90						94010300	ø 229,0 x 50.5	⊕ rear drum brake	
136700			Luc	2334602	[–] 23346 19.3	Orga 0912877→ →Orga 1098377	Luc	91052900	ø 228.6 x 41.5		
1.9 D	06/08→12/11	51 / 69				Orga 1098477→	Luc	97012000			
			Bos	2410101	[–] 24101 19	Orga 09128FV→					
						Orga 09128FL→	Luc	84052900	bore ø 22.2 ø 228.6 x 41.5		
			Gir	2312401	[+] 23124 19.3	solid disc					
						vented disc →Orga 09127		94010300	ø 229,0 x 50.5		
				PRO 92089103	ø 266 x 13 x 27.2						
				PRO 92048103	ø 266 x 20.5 x 27.4	Orga 0912877→ →Orga 1098377 →Orga 09127					
				PRO 92111503	ø 266 x 22 x 34	Orga 1098477→ Orga 09128FV→ Orga 09128FL→					
BERLINGO Box (M_) 07/96→12/03											
136800			Luc	2334602	[–] 23346 19.3	Lucas vented disc Orga 9128→ 2001-11-04→	Luc	91052900	ø 228.6 x 41.5		
1.1 i (MAHDZ, MBHDZ, MBHFX)	07/96→	44 / 60									
1.4 i (MBKFX, MBKFW)	07/96→	55 / 75	Bos	2410101	[–] 24101 19	Bosch vented disc Orga 9128→ 2001-11-04→	Luc	97012000			
1.6 16V	08/05→12/07	81 / 110									
1.6 16V (MBNFU)	10/00→	80 / 109	Gir	2312401	[+] 23124 19.3	solid disc	Luc	84052900	bore ø 22.2 ø 228.6 x 41.5		
1.8 D (MBA9A, MCA9A)	07/96→	43 / 59				Girling vented disc →Orga 9127 →2001-11-03					
1.9 D (MBDJY)	07/96→	51 / 70						TPM0012			
1.9 D 70 (MBWJZ, MCWJZ)	04/99→	51 / 69	Bos	82054200							
1.9 D 70 4WD (MBWJZ, MCWJZ)	07/98→	51 / 69						94010300	ø 229,0 x 50.5		
2.0 HDI 90 (MBRHY, MCRHY)	12/99→	66 / 90	Luc	82063300							
2.0 HDI 90 4WD (MBRHY, MCRHY)	11/00→	66 / 90	Bos	82063800							
			Bos	82510100							
				PRO 92089103	ø 266 x 13 x 27.2	Girling					
				PRO 92048103	ø 266 x 20.5 x 27.4	Girling/Lucas →Orga 10983 →2006-12-04					
				PRO 92111503	ø 266 x 22 x 34	Bosch Orga 9128→ 2001-11-04→					
						Lucas Orga 10984→ 2006-12-04→					
				TPM0012							
136900			Luc	2334602	[–] 23346 19.3	Lucas vented disc	Luc	91052900	ø 228.6 x 41.5		
1.4	11/02→	48 / 65									
Electric	07/03→	27 / 37	Bos	2410101	[–] 24101 19	Bosch vented disc	Luc	97012000			
			Gir	2312401	[+] 23124 19.3	solid disc	Luc	84052900	bore ø 22.2 ø 228.6 x 41.5		
			Bos	82054200				94010300	ø 229,0 x 50.5		
			Luc	82063300							
			Bos	82063800							
			Bos	82510100							
				PRO 92089103	ø 266 x 13 x 27.2	Girling					
				PRO 92048103	ø 266 x 20.5 x 27.4	Lucas →Orga 10983 →2006-12-04					
				PRO 92111503	ø 266 x 22 x 34	Bosch					
						Lucas Orga 10984→ 2006-12-04→					
137000			Luc	2334602	[–] 23346 19.3	Lucas vented disc	Luc	91052900	ø 228.6 x 41.5		
1.4 bivalent	11/02→	48 / 65									
1.4 i bivalent (MBKFW)	04/03→	55 / 75	Bos	2410101	[–] 24101 19	Bosch vented disc	Luc	97012000			
1.6 HDI 75 (MB9HW)	07/05→	55 / 75									
1.6 HDI 90 (MB9HX, MC9HX)	07/05→	66 / 90	Gir	2312401	[+] 23124 19.3	solid disc	Luc	84052900	bore ø 22.2 ø 228.6 x 41.5		
			Bos	82054200				TPM0012			
			Luc	82063300				94010300	ø 229,0 x 50.5		
			Bos	82063800							
			Bos	82510100							

CITROËN

CITROËN

30 kW / hp

BERLINGO Box (M_) 07/96→12/03

137000													
1.4 bivalent	11/02→	48 / 65		PRO	92089103	ø 266 x 13 x 27.2	Girling						
1.4 i bivalent (MBKFW)	04/03→	55 / 75		PRO	92048103	ø 266 x 20.5 x 27.4	Lucas →Orga 10983 →2006-12-04						
1.6 HDI 75 (MB9HW)	07/05→	55 / 75		PRO	92111503	ø 266 x 22 x 34	Bosch						
1.6 HDI 90 (MB9HX, MC9HX)	07/05→	66 / 90					Lucas Orga 10984→ 2006-12-04→						
					TPM0012								
137100			Luc		2334602	[–] 23346 19.3	Lucas vented disc Orga 9128→ 2001-11-04→	Luc		91052900	ø 228.6 x 41.5	
1.8 i	08/99→10/02	66 / 90	Bos		2410101	[–] 24101 19	Bosch vented disc Orga 9128→ 2001-11-04→	Luc		97012000		
			Gir		2312401	[+] 23124 19.3	solid disc	Luc		84052900	bore ø 22.2	
							Girling vented disc →Orga 9127 →2001-11-03				ø 228.6 x 41.5	
					TPM0012							
			Bos		82054200					94010300	ø 229,0 x 50.5	
			Luc		82063300							
			Bos		82063800							
			Bos		82510100							
				PRO	92089103	ø 266 x 13 x 27.2	Girling					
				PRO	92048103	ø 266 x 20.5 x 27.4	Girling/Lucas					
				PRO	92111503	ø 266 x 22 x 34	Bosch Orga 9128→ 2001-11-04→					
					TPM0012							
137200			Luc		2334602	[–] 23346 19.3	Orga 09128→ 2001-11-05→	Luc		91052900	ø 228.6 x 41.5	⊕ rear drum brake
1.8 i	08/99→12/03	74 / 100	Bos		2410101	[–] 24101 19	vented disc Orga 09128→ 2001-11-05→	Luc		97012000		
			Gir		2312401	[+] 23124 19.3	solid disc	Luc		84052900	bore ø 22.2	⊕ rear drum brake
							vented disc →Orga 09127 →2001-11-04				ø 228.6 x 41.5	
					TPM0012							
				PRO	92089103	ø 266 x 13 x 27.2				94010300	ø 229,0 x 50.5	
				PRO	92048103	ø 266 x 20.5 x 27.4	Orga 09128→ 2001-11-05→ →Orga 1098377 →2006-12-04 GIRLING -brake					
				PRO	92111503	ø 266 x 22 x 34	Orga 1098477→ 2006-12-05→ TRW -brake					
							Orga 09128→ BOSCH -brake					
					TPM0012							

BERLINGO Box 04/08→

137300			Ate		2453801	[–] 24538 18.8		Luc		2476501	[–] 24765 16.6	
1.6	04/08→	66 / 90										
1.6	04/08→	80 / 109	Ate		82032000			Luc		82075400		
1.6 HDi 110	04/08→	80 / 109										
1.6 HDi 110	07/10→	82 / 112	Ate		82062900			Luc		82063300		
1.6 HDi 115	07/10→	84 / 114										
1.6 HDi 75	04/08→	55 / 75		PRO	92111603	ø 283 x 26 x 34			ABS	92168700	ø 268 x 12 x 73.2	
1.6 HDi 90	07/10→	68 / 92										
1.6 VTi 120	11/09→	88 / 120			TPM0012					TPM0012		
1.6 VTi 95	07/10→	72 / 98										
137400			Ate		2453801	[–] 24538 18.8		Luc		2476501	[–] 24765 16.6	⊕ rear disc brake
1.6 HDi 90	04/08→	66 / 90	Ate		82032000			Luc		82075400		⊕ rear disc brake
			Ate		82062900			Luc		82063300		⊕ rear disc brake
				PRO	92111603	ø 283 x 26 x 34		Luc		91052900	ø 228.6 x 41.5	⊕ rear drum brake
					TPM0012				ABS	92168700	ø 268 x 12 x 73.2	⊕ rear disc brake
										TPM0012		
										94010300	ø 229,0 x 50.5	⊕ rear drum brake
137500			Ate		2453801	[–] 24538 18.8		Luc		2476501	[–] 24765 16.6	
Electric	09/11→	42 / 57	Ate		82032000			Luc		82075400		
			Ate		82062900			Luc		82063300		
				PRO	92111603	ø 283 x 26 x 34			ABS	92168700	ø 268 x 12 x 73.2	

→

	30 kW / hp										
BERLINGO Box 04/08→											
Electric	09/11→	137500 42 / 57		TPM0012							
Electric	03/14→	137600 49 / 67	Ate	2453801	[–] 24538 18.8		Luc	2476501	[–] 24765 16.6		
			Ate	82032000				92168700	ø 268 x 12 x 73.2		
				92111603	ø 283 x 26 x 34						
				TPM0012							
BERLINGO Kasten (M_) 07/96→12/03 → BERLINGO Box (M_), Page 253											
BERLINGO Kasten 04/08→ → BERLINGO Box, Page 254											
BERLINGO Platform/Chassis 04/08→											
1.6 HDi 90	04/08→	137700 66 / 90	Ate	2453801	[–] 24538 18.8		Luc	2476501	[–] 24765 16.6		
			Ate	82032000			Luc	82075400			
			Ate	82062900				92168700	ø 268 x 12 x 73.2		
				92111603	ø 283 x 26 x 34						
				TPM0012							
BERLINGO Pritsche/Fahrgestell 04/08→ → BERLINGO Platform/Chassis, Page 255											
C1 (PM_, PN_) 06/05→											
1.0 1.4 HDi	06/05→ 06/05→	137800 50 / 68 40 / 54	Bos	2395901	[–] 23959 17.5		Bos	91064500	ø 200 x 32		
			Bos	82054300			Bos	97032000			
			Bos	82063800			Bos	84064501	bore ø 17.5 ø 200 x 32		
			Bos	82510100				94026500	ø 200,0 x 44		
				92141903	ø 247 x 20 x 35.3						
C1 II 04/14→											
1.0 VTi 68 1.2 VTi 82	04/14→ 04/14→	137900 51 / 69 60 / 82	Bos	2395901	[–] 23959 17.5		Bos	91064500	ø 200 x 32		
				92141903	ø 247 x 20 x 35.3		Bos	97032000			
								94026500	ø 200,0 x 44		
C2 (JM_) 09/03→											
1.1	09/03→	138000 44 / 60	Luc	2340702	[–] 23407 19.3		Luc	91059800	ø 203.2 x 38		
			Luc	82059900			Bos	91061600	ø 203.2 x 37		
			Luc	82063300			Bos	97031200			
				92089103	ø 266 x 13 x 27.2		Luc	97033500			
				TPM0012			Luc	84059800	bore ø 19 ø 203.2 x 38		
							Bos	84061602	bore ø 19 ø 203.2 x 37		
								94026600	ø 203,0 x 42		
1.4 1.4 16V	09/03→ 06/06→	138100 54 / 73 65 / 90	Luc	2340702	[–] 23407 19.3	solid disc	Luc	2355402	[–] 23554 17.2	⊕ rear disc brake	
			Luc	2340902	[–] 23409 19.3	vented disc	Luc	2355481	[–] 23554 17.2	⊕ rear disc brake	
			Luc	82059900			Luc	82037300		⊕ rear disc brake	
			Luc	82063300			Luc	82062800		⊕ rear disc brake	
				92089103	ø 266 x 13 x 27.2		Luc	91059800	ø 203.2 x 38	⊕ rear drum brake	
				92111503	ø 266 x 22 x 34		Bos	91061600	ø 203.2 x 37	⊕ rear drum brake	
				TPM0012			Bos	97031200		⊕ rear drum brake	
							Luc	97033500		⊕ rear drum brake	
							Luc	84059800	bore ø 19 ø 203.2 x 38	⊕ rear drum brake	
							Bos	84061602	bore ø 19 ø 203.2 x 37	⊕ rear drum brake	

CITROËN

CITROËN

		kW / hp											
C2 (JM_) 09/03→													
138100													
1.4	09/03→	54 / 73											
1.4 16V	06/06→	65 / 90											
										PRO	**92111703**	ø 246.5 x 9 x 35	⊕ rear disc brake
											TPM0012		
											94026600	ø 203,0 x 42	⊕ rear drum brake
138200			Luc		**2340702**	[–] 23407 19.3	solid disc		Luc		**2355402**	[–] 23554 17.2	⊕ rear disc brake
1.4	10/06→	55 / 75	Luc		**2340902**	[–] 23409 19.3	vented disc		Luc		**2355481**	[–] 23554 17.2	⊕ rear disc brake
			Luc		**82059900**				Luc		**82037300**		⊕ rear disc brake
			Luc		**82063300**				Luc		**82062800**		⊕ rear disc brake
				PRO	**92089103**	ø 266 x 13 x 27.2			Luc		**91059800**	ø 203.2 x 38	⊕ rear drum brake
				PRO	**92111503**	ø 266 x 22 x 34			Bos		**91061600**	ø 203.2 x 37	⊕ rear drum brake
									Bos		**97031200**		⊕ rear drum brake
									Luc		**97033500**		⊕ rear drum brake
									Luc		**84059800**	bore ø 19 ø 203.2 x 38	⊕ rear drum brake
									Bos		**84061602**	bore ø 19 ø 203.2 x 37	⊕ rear drum brake
										PRO	**92111703**	ø 246.5 x 9 x 35	⊕ rear disc brake
											94026600	ø 203,0 x 42	⊕ rear drum brake
138300			Luc		**2340702**	[–] 23407 19.3	solid disc		Luc		**2355402**	[–] 23554 17.2	⊕ rear disc brake
1.4 HDi	09/03→	50 / 68	Luc		**2340902**	[–] 23409 19.3	⊖ rim size 16" vented disc		Luc		**2355481**	[–] 23554 17.2	⊕ rear disc brake
							⊕ rim size 16" →Orga 10800 →2006-06-03						
			Bos		**2395401**	[–] 23954 19	⊕ rim size 16" Orga 10801→ 2006-06-04→		Luc		**82037300**		⊕ rear disc brake
			Bos		**82054200**		⊕ rim size 16" Orga 10801→ 2006-06-04→		Luc		**82062800**		⊕ rear disc brake
			Luc		**82059900**		solid disc		Luc		**91059800**	ø 203.2 x 38	⊕ rear drum brake
			Luc		**82506100**		⊖ rim size 16" vented disc		Bos		**91061600**	ø 203.2 x 37	⊕ rear drum brake
							⊕ rim size 16" →Orga 10800 →2006-06-03						
			Luc		**82063300**				Bos		**97031200**		⊕ rear drum brake
				PRO	**92089103**	ø 266 x 13 x 27.2			Luc		**97033500**		⊕ rear drum brake
				PRO	**92111503**	ø 266 x 22 x 34			Luc		**84059800**	bore ø 19 ø 203.2 x 38	⊕ rear drum brake
					TPM0012				Bos		**84061602**	bore ø 19 ø 203.2 x 37	⊕ rear drum brake
										PRO	**92111703**	ø 246.5 x 9 x 35	⊕ rear disc brake
											TPM0012		
											94026600	ø 203,0 x 42	⊕ rear drum brake
138400			Luc		**2340902**	[–] 23409 19.3	⊖ rim size 16"		Luc		**2355402**	[–] 23554 17.2	
1.6	09/03→	80 / 109					⊕ rim size 16" →Orga 10800 →2006-06-03		Luc		**2355481**	[–] 23554 17.2	
			Bos		**2395401**	[–] 23954 19	⊕ rim size 16" Orga 10801→ 2006-06-04→		Luc		**82037300**		
			Bos		**82054200**		⊕ rim size 16" Orga 10801→ 2006-06-04→		Luc		**82062800**		
			Luc		**82506100**		⊖ rim size 16"			PRO	**92111703**	ø 246.5 x 9 x 35	
							⊕ rim size 16" →Orga 10800 →2006-06-03				**TPM0012**		
			Luc		**82063300**								
				PRO	**92111503**	ø 266 x 22 x 34							
					TPM0012								
138500			Bos		**2395401**	[–] 23954 19			Luc		**2355402**	[–] 23554 17.2	
1.6 HDi	09/05→	80 / 109											
1.6 VTS	01/05→	90 / 122	Bos		**82054200**				Luc		**2355481**	[–] 23554 17.2	
			Luc		**82063300**				Luc		**82037300**		
				PRO	**92111503**	ø 266 x 22 x 34			Luc		**82062800**		

→

		kW / hp									
C2 (JM_) 09/03→											
138500				TPM0012				PRO	92111703	ø 246.5 x 9 x 35	
1.6 HDi	09/05→	80 / 109							TPM0012		
1.6 VTS	01/05→	90 / 122									
C2 ENTERPRISE 04/09→											
138600			Luc	2340702	[–] 23407 19.3	solid disc	Luc		2355402	[–] 23554 17.2	⊕ rear disc brake
1.4 HDi	04/09→	50 / 68	Bos	2395401	[–] 23954 19	⊕ rim size 16"	Luc	epad	2355481	[–] 23554 17.2	⊕ rear disc brake
			Bos	82054200		⊕ rim size 16"	Luc		82037300		⊕ rear disc brake
			Luc	82059900		solid disc	Luc		82062800		⊕ rear disc brake
			Luc	82063300			Luc		91059800	ø 203.2 x 38	⊕ rear drum brake
				PRO 92089103	ø 266 x 13 x 27.2		Bos		91061600	ø 203.2 x 37	⊕ rear drum brake
				PRO 92111503	ø 266 x 22 x 34		Bos		97031200		⊕ rear drum brake
				TPM0012			Luc		97033500		⊕ rear drum brake
							Luc		84059800	bore ø 19 ø 203.2 x 38	⊕ rear drum brake
								PRO	92111703	ø 246.5 x 9 x 35	⊕ rear disc brake
									TPM0012		
									94026600	ø 203,0 x 42	⊕ rear drum brake
C3 I (FC_) 02/02→07/12											
138700			Luc	2340702	[–] 23407 19.3		Luc		91059800	ø 203.2 x 38	
1.1 i	02/02→	44 / 60	Luc	82059900		→Orga 10800 →2006-06-03	Bos		91061600	ø 203.2 x 37	
			Luc	82063300			Bos		97031200		
				PRO 92089103	ø 266 x 13 x 27.2	→Orga 11556 →2008-06-28	Luc		97033500		
				TPM0012			Luc		84059800	bore ø 19 ø 203.2 x 38	
							Bos		84061602	bore ø 19 ø 203.2 x 37	
									94026600	ø 203,0 x 42	
138800			Luc	2340702	[–] 23407 19.3		Luc		91059800	ø 203.2 x 38	→Orga 11981 ⊖ ABS ⊕ ABS TRW
1.4	12/05→07/12	58 / 79		PRO 92089103	ø 266 x 13 x 27.2		Bos		91061600	ø 203.2 x 37	⊕ ABS Bosch
1.4 Flex	12/05→07/12	59 / 80		TPM0012			Bos		97031200		Orga 11982→ ⊖ ABS ⊕ ABS
							Luc		97033500		→Orga 11981 ⊖ ABS ⊕ ABS
									94026600	ø 203,0 x 42	→Orga 10955 Orga 11982→ ⊖ ABS ⊕ ABS
138900			Luc	2340902	[–] 23409 19.3	⊖ rim size 16"	Luc		2355402	[–] 23554 17.2	⊕ rear disc brake
1.4 16V	12/03→	65 / 88	Bos	2395401	[–] 23954 19	⊕ rim size 16"	Luc	epad	2355481	[–] 23554 17.2	⊕ rear disc brake
			Bos	82054200		⊕ rim size 16"	Luc		82037300		
			Luc	82506100		⊖ rim size 16"	Luc		82062800		⊕ rear disc brake
			Luc	82063300			Luc		91059800	ø 203.2 x 38	⊕ rear drum brake
				PRO 92111503	ø 266 x 22 x 34		Bos		91061600	ø 203.2 x 37	⊕ rear drum brake
				TPM0012			Bos		97031200		⊕ rear drum brake
							Luc		97033500		⊕ rear drum brake
							Luc		84059800	bore ø 19 ø 203.2 x 38	
							Bos		84061602	bore ø 19 ø 203.2 x 37	
								PRO	92111703	ø 246.5 x 9 x 35	⊕ rear disc brake
									94026600	ø 203,0 x 42	⊕ rear drum brake

CITROËN

CITROËN

C3 I (FC_) 02/02→07/12

		139000												
1.4 16V HDi	02/02→	66 / 90	Luc		2340902	[–] 23409 19.3		Luc		2355402	[–] 23554 17.2	⊕ rear disc brake
			Luc		82506100			Luc		2355481	[–] 23554 17.2	⊕ rear disc brake
			Luc		82063300			Luc		82037300		⊕ rear disc brake
				PRO	92111503	ø 266 x 22 x 34		Luc		82062800		⊕ rear disc brake
					TPM0012			Luc		91059800	ø 203.2 x 38	⊕ rear drum brake
								Bos		91061600	ø 203.2 x 37	⊕ rear drum brake
								Bos		97031200		⊕ rear drum brake
								Luc		97033500		⊕ rear drum brake
								Luc		84059800	bore ø 19 ø 203.2 x 38	⊕ rear drum brake
								Bos		84061602	bore ø 19 ø 203.2 x 37	
									PRO	92111703	ø 246.5 x 9 x 35	⊕ rear disc brake
										TPM0012		
										94026600	ø 203,0 x 42	⊕ rear drum brake
		139100										
1.4 Bioflex	01/09→	60 / 82	Bos		2395401	[–] 23954 19	→Orga 12270 →2010-06-12 Ø 266 mm			91067200	ø 228 x 42	in. dr. Ø 203 mm in. dr. Ø 8 "
			Bos		2488301	[–] 24883 18	Orga 12271→ 2010-06-13→ Ø 283 mm			91077200	ø 203.2 x 39	→Orga 12270 →2010-06-12 in. dr. Ø 203 mm in. dr. Ø 8 "
			Bos		82054200		→Orga 12270 →2010-06-12 Ø 266 mm	Bos		97010100		in. dr. Ø 228 mm in. dr. Ø 9 "
				PRO	92111503	ø 266 x 22 x 34	→Orga 12270 →2010-06-12	Bos		97031200		in. dr. Ø 8 " in. dr. Ø 203 mm
				PRO	92111603	ø 283 x 26 x 34	Orga 12271→ 2010-06-13→			84067200	bore ø 20.6 ø 228 x 42	in. dr. Ø 228 mm in. dr. Ø 9 "
		139200										
1.4 Flex	12/05→	58 / 79	Luc		2340702	[–] 23407 19.3		Luc		91059800	ø 203.2 x 38	
				PRO	92089103	ø 266 x 13 x 27.2	→Orga 11556, 11787	Bos		91061600	ø 203.2 x 37	
					TPM0012			Bos		97031200		
								Luc		97033500		
								Luc		84059800	bore ø 19 ø 203.2 x 38	⊖ ABS
								Luc		84059801	bore ø 20.6 ø 203.2 x 38	⊕ ABS
								Bos		84061600	bore ø 20.6 ø 203.2 x 37	
										94026600	ø 203,0 x 42	
		139300										
1.4 HDi	02/02→	50 / 68	Luc		2340702	[–] 23407 19.3		Luc		91059800	ø 203.2 x 38	
1.4 i	02/02→	54 / 73	Luc		82059900			Bos		91061600	ø 203.2 x 37	
1.4 i Bivalent	02/02→	54 / 73	Luc		82063300			Bos		97031200		
				PRO	92089103	ø 266 x 13 x 27.2		Luc		97033500		
					TPM0012			Luc		84059800	bore ø 19 ø 203.2 x 38	
								Bos		84061602	bore ø 19 ø 203.2 x 37	
										94026600	ø 203,0 x 42	
		139400										
1.4 HDi	07/03→	52 / 70	Luc		2340702	[–] 23407 19.3		Luc		91059800	ø 203.2 x 38	
1.4 HDi	05/05→	55 / 75	Luc		82059900			Bos		91061600	ø 203.2 x 37	
			Luc		82063300			Bos		97031200		
				PRO	92089103	ø 266 x 13 x 27.2		Luc		97033500		
								Luc		84059800	bore ø 19 ø 203.2 x 38	
								Bos		84061602	bore ø 19 ø 203.2 x 37	
										94026600	ø 203,0 x 42	

→

C3 I (FC_) 02/02→07/12

1.6 16V	02/02→	139500 80 / 109	Luc	2340902	[–] 23409 19.3	⊕ man. ⊕ rim size 15"	Luc	2355402	[–] 23554 17.2	⊕ rear disc brake
			Bos	2360001	[–] 23600 19	⊕ autom.	Luc	2355481	[–] 23554 17.2	⊕ rear disc brake
			Bos	2395401	[–] 23954 19	⊕ man. ⊕ rim size 16"	Luc	82037300		⊕ rear disc brake
			Bos	82054200		⊕ man. ⊕ rim size 16"	Luc	82062800		⊕ rear disc brake
			Luc	82506100		⊕ man. ⊕ rim size 15"	Luc	91059800	ø 203.2 x 38	⊕ rear drum brake
			Luc	82063300			Bos	91061600	ø 203.2 x 37	⊕ rear drum brake
				92111503	ø 266 x 22 x 34	⊕ man.	Bos	97031200		⊕ rear drum brake
				92111603	ø 283 x 26 x 34	⊕ autom.	Luc	97033500		⊕ rear drum brake
				TPM0012				92111703	ø 246.5 x 9 x 35	⊕ rear disc brake
								TPM0012		
								94026600	ø 203,0 x 42	⊕ rear drum brake
1.6 16V	05/03→09/05	139600 81 / 110	Luc	2340902	[–] 23409 19.3		Luc	2355402	[–] 23554 17.2	
				92111503	ø 266 x 22 x 34		Luc	2355481	[–] 23554 17.2	
				TPM0012			Luc	82037300		
								92111703	ø 246.5 x 9 x 35	
								TPM0012		
1.6 16V HDi	09/05→	139700 80 / 109	Bos	2360001	[–] 23600 19		Luc	2355402	[–] 23554 17.2	⊕ rear disc brake
				92111603	ø 283 x 26 x 34		Luc	2355481	[–] 23554 17.2	⊕ rear disc brake
				TPM0012			Luc	82037300		⊕ rear disc brake
							Luc	91059800	ø 203.2 x 38	⊕ rear drum brake
							Bos	91061600	ø 203.2 x 37	⊕ rear drum brake
							Bos	97031200		⊕ rear drum brake
							Luc	97033500		⊕ rear drum brake
								92111703	ø 246.5 x 9 x 35	⊕ rear disc brake
								TPM0012		
								94026600	ø 203,0 x 42	⊕ rear drum brake
1.6 16V HDi	10/05→	139800 66 / 90	Luc	2340902	[–] 23409 19.3	⊕ rim size 15"	Luc	2355402	[–] 23554 17.2	⊕ rear disc brake
			Bos	2395401	[–] 23954 19	⊕ rim size 16"	Luc	2355481	[–] 23554 17.2	⊕ rear disc brake
			Bos	82054200		⊕ rim size 16"	Luc	82037300		⊕ rear disc brake
			Luc	82506100		⊕ rim size 15"	Luc	82062800		⊕ rear disc brake
			Luc	82063300			Luc	91059800	ø 203.2 x 38	⊕ rear drum brake
				92111503	ø 266 x 22 x 34		Bos	91061600	ø 203.2 x 37	⊕ rear drum brake
				TPM0012			Bos	97031200		⊕ rear drum brake
							Luc	97033500		⊕ rear drum brake
							Luc	84059800	bore ø 19 ø 203.2 x 38	⊕ rear drum brake
							Bos	84061602	bore ø 19 ø 203.2 x 37	⊕ rear drum brake
								92111703	ø 246.5 x 9 x 35	⊕ rear disc brake
								94026600	ø 203,0 x 42	⊕ rear drum brake
1.6 Bioflex	06/05→	139900 83 / 113	Bos	2360001	[–] 23600 19		Luc	2355402	[–] 23554 17.2	⊕ rear disc brake
				92111603	ø 283 x 26 x 34		Luc	2355481	[–] 23554 17.2	⊕ rear disc brake

CITROËN

CITROËN

		kW / hp										
C3 I (FC_) 02/02→07/12												
		139900							Luc	82037300		⊕ rear disc brake
1.6 Bioflex	06/05→	83 / 113							Luc	91059800	ø 203.2 x 38	⊕ rear drum brake
									Bos	91061600	ø 203.2 x 37	⊕ rear drum brake
									Bos	97031200		⊕ rear drum brake
									Luc	97033500		⊕ rear drum brake
										92111703	ø 246.5 x 9 x 35	⊕ rear disc brake
										94026600	ø 203,0 x 42	⊕ rear drum brake
C3 II 11/09→												
		140000	Bos		2395401	[–] 23954 19	→Orga 12270 →2010-06-12			91077200	ø 203.2 x 39	in. dr. Ø 8 "
1.0 VTi 68	08/12→	50 / 68							Bos	97031200		in. dr. Ø 203 mm in. dr. Ø 8 "
1.2 VTi 82	06/12→	60 / 82	Bos		2488301	[–] 24883 18	Orga 12271→ 2010-06-13→					
					92111503	ø 266 x 22 x 34	→Orga 12270 →2010-06-12					
					92111603	ø 283 x 26 x 34	Orga 12271→ 2010-06-13→					
					TPM0012							
		140100	Bos		2395401	[–] 23954 19	→Orga 12270 →2010-06-12			91077200	ø 203.2 x 39	in. dr. Ø 8 "
1.1	11/09→	44 / 60										
1.1 BiFuel	11/10→	44 / 60	Bos		2488301	[–] 24883 18	Orga 12271→ 2010-06-13→		Bos	97031200		in. dr. Ø 203 mm in. dr. Ø 8 "
1.4	11/09→	54 / 73										
1.4 HDi 70	11/09→	50 / 68			92111503	ø 266 x 22 x 34	→Orga 12270 →2010-06-12					
1.6 HDi 90	11/09→	66 / 90			92111603	ø 283 x 26 x 34	Orga 12271→ 2010-06-13→					
		140200	Bos		2395401	[–] 23954 19	→Orga 12270 →2010-06-12			91077200	ø 203.2 x 39	⊕ rear drum brake
1.4 Flex	11/09→	58 / 80	Bos		2488301	[–] 24883 18	Orga 12271→ 2010-06-13→		Bos	97031200		in. dr. Ø 203 mm ⊕ rear drum brake
					92111503	ø 266 x 22 x 34	→Orga 12270 →2010-06-12					
					92111603	ø 283 x 26 x 34	Orga 12271→ 2010-06-13→					
		140300	Luc		2340902	[–] 23409 19.3	15" -brake		Luc	91059800	ø 203.2 x 38	
1.4 LPG	06/13→	70 / 95	Bos		2395401	[–] 23954 19	16" -brake		Bos	91061600	ø 203.2 x 37	
					92111503	ø 266 x 22 x 34			Bos	97031200		
					TPM0012				Luc	97033500		
									Luc	84059801	bore ø 20.6 ø 203.2 x 38	
									Bos	84061600	bore ø 20.6 ø 203.2 x 37	
										94026600	ø 203,0 x 42	
		140400	Bos		2395401	[–] 23954 19	→Orga 12270 →2010-06-12		Luc	2355402	[–] 23554 17.2	⊕ rear disc brake
1.4 VTi 95	11/09→	70 / 95	Bos		2488301	[–] 24883 18	Orga 12271→ 2010-06-13→		Luc	2355481	[–] 23554 17.2	⊕ rear disc brake
					92111503	ø 266 x 22 x 34	→Orga 12270 →2010-06-12			91067200	ø 228 x 42	⊕ rear drum brake in. dr. Ø 9 "
					92111603	ø 283 x 26 x 34	Orga 12271→ 2010-06-13→		Bos	97010100		in. dr. Ø 228 mm in. dr. Ø 9 " ⊕ rear drum brake
										84067200	bore ø 20.6 ø 228 x 42	⊕ rear drum brake in. dr. Ø 9 "
										92111703	ø 246.5 x 9 x 35	⊕ rear disc brake
		140500	Luc		2340902	[–] 23409 19.3	⊖ rim size 16"		Luc	91059800	ø 203.2 x 38	
1.5 Flex	01/12→	68 / 92										
1.5 i	01/12→	65 / 89	Bos		2395401	[–] 23954 19	⊕ rim size 16"		Bos	91061600	ø 203.2 x 37	
					92111503	ø 266 x 22 x 34			Bos	97031200		
					TPM0012				Luc	97033500		
									Luc	84059801	bore ø 20.6 ø 203.2 x 38	
									Bos	84061600	bore ø 20.6 ø 203.2 x 37	

→

		kW / hp										
C3 II 11/09→												
		140500										
1.5 Flex	01/12→	68 / 92										
1.5 i	01/12→	65 / 89										
		140600										
1.6 Flex	11/09→	81 / 110	Bos		**2395401**	[–] 23954 19	→Orga 12270 →2010-06-12	Luc		**2355402**	[–] 23554 17.2	⊕ rear disc brake
			Bos		**2488301**	[–] 24883 18	Orga 12271→ 2010-06-13→	Luc		**2355481**	[–] 23554 17.2	⊕ rear disc brake
				PRO	**92111503**	ø 266 x 22 x 34	→Orga 12270 →2010-06-12			**91067200**	ø 228 x 42	⊕ rear drum brake
				PRO	**92111603**	ø 283 x 26 x 34	Orga 12271→ 2010-06-13→	Bos		**97010100**		in. dr. Ø 228 mm ⊕ rear drum brake
										84067200	bore ø 20.6 ø 228 x 42	⊕ rear drum brake
									PRO	**92111703**	ø 246.5 x 9 x 35	⊕ rear disc brake
		140700										
1.6 HDi	11/09→	68 / 92	Bos		**2395401**	[–] 23954 19	→Orga 12270 →2010-06-12	Luc		**2355402**	[–] 23554 17.2	⊕ rear disc brake
			Bos		**2488301**	[–] 24883 18	Orga 12271→ 2010-06-13→	Luc		**2355481**	[–] 23554 17.2	⊕ rear disc brake
				PRO	**92111503**	ø 266 x 22 x 34	→Orga 12270 →2010-06-12			**91077200**	ø 203.2 x 39	in. dr. Ø 8 " ⊕ rear drum brake
				PRO	**92111603**	ø 283 x 26 x 34	Orga 12271→ 2010-06-13→	Bos		**97031200**		in. dr. Ø 203 mm in. dr. Ø 8 " ⊕ rear drum brake
									ABS	**92202100**	ø 249 x 9 x 69.2	⊕ rear disc brake
		140800										
1.6 HDi 110	11/09→	82 / 112	Bos		**2395401**	[–] 23954 19	→Orga 12270 →2010-06-12	Luc		**2355402**	[–] 23554 17.2	
1.6 VTi 120	11/09→	88 / 120	Bos		**2488301**	[–] 24883 18	Orga 12271→ 2010-06-13→	Luc		**2355481**	[–] 23554 17.2	
				PRO	**92111503**	ø 266 x 22 x 34	→Orga 12270 →2010-06-12		PRO	**92111703**	ø 246.5 x 9 x 35	
				PRO	**92111603**	ø 283 x 26 x 34	Orga 12271→ 2010-06-13→					
		140900										
1.6 HDi 115	09/12→	84 / 114	Bos		**2395401**	[–] 23954 19	→Orga 12270 →2010-06-12	Luc		**2355402**	[–] 23554 17.2	
			Bos		**2488301**	[–] 24883 18	Orga 12271→ 2010-06-13→	Luc		**2355481**	[–] 23554 17.2	
				PRO	**92111503**	ø 266 x 22 x 34	→Orga 12270 →2010-06-12		ABS	**92202100**	ø 249 x 9 x 69.2	
				PRO	**92111603**	ø 283 x 26 x 34	Orga 12271→ 2010-06-13→					
					TPM0012							
		141000	Luc		**2340902**	[–] 23409 19.3	⊕ man. 15" -brake	Luc		**2355402**	[–] 23554 17.2	
1.6 VTi 120	11/13→	85 / 115	Bos		**2360001**	[–] 23600 19	⊕ autom.	Luc		**2355481**	[–] 23554 17.2	
1.6 VTi 120 Flex	01/12→	90 / 122	Bos		**2395401**	[–] 23954 19	⊕ man. 16" -brake		PRO	**92111703**	ø 246.5 x 9 x 35	
				PRO	**92111503**	ø 266 x 22 x 34	⊕ man.			**TPM0012**		
				PRO	**92111603**	ø 283 x 26 x 34	⊕ autom.					
					TPM0012							
C3 Picasso 02/09→												
		141100	Bos		**2395401**	[–] 23954 19		Luc		**2355402**	[–] 23554 17.2	
1.4 VTi 95	02/09→	70 / 95	Bos		**82054200**			Luc		**2355481**	[–] 23554 17.2	
1.4 VTi 95 LPG	01/12→	70 / 95		PRO	**92111503**	ø 266 x 22 x 34		Luc		**82037300**		
					TPM0012				ABS	**92202100**	ø 249 x 9 x 69.2	
										TPM0012		
		141200	Bos		**2395401**	[–] 23954 19	Ø 266 mm	Luc		**2355402**	[–] 23554 17.2	
1.5 Flex	05/14→	68 / 92										
1.6	07/12→	85 / 115	Bos		**2488301**	[–] 24883 18	Ø 283 mm	Luc		**2355481**	[–] 23554 17.2	
1.6 Flex	05/11→	83 / 113										
1.6 Flex	07/12→	90 / 122		PRO	**92111503**	ø 266 x 22 x 34			ABS	**92202100**	ø 249 x 9 x 69.2	
				PRO	**92111603**	ø 283 x 26 x 34						
					TPM0012							
		141300	Bos		**2395401**	[–] 23954 19	Ø 266 mm	Luc		**2355402**	[–] 23554 17.2	
1.6	05/11→	81 / 110										
1.6 HDi 110	05/10→	82 / 112	Bos		**2488301**	[–] 24883 18	Ø 283 mm	Luc		**2355481**	[–] 23554 17.2	
1.6 HDI 90	07/10→	68 / 92										

CITROËN

CITROËN

		kW / hp									
C3 Picasso 02/09→											
141300				92111503	ø 266 x 22 x 34		Luc		82037300		
1.6	05/11→	81 / 110									
1.6 HDi 110	05/10→	82 / 112		92111603	ø 283 x 26 x 34				92202100	ø 249 x 9 x 69.2	
1.6 HDI 90	07/10→	68 / 92									
				TPM0012							
141400			Bos	2488301	[–] 24883 18		Luc		2355402	[–] 23554 17.2	
1.6 Flex	11/09→	78 / 107									
1.6 Flex	05/11→	81 / 110	Bos	82054200			Luc		2355481	[–] 23554 17.2	
1.6 HDi	02/09→	80 / 109									
1.6 VTi 120	02/09→	88 / 120		92111603	ø 283 x 26 x 34		Luc		82037300		
				TPM0012					92202100	ø 249 x 9 x 69.2	
141500			Bos	2395401	[–] 23954 19		Luc		2355402	[–] 23554 17.2	
1.6 HDi	02/09→	66 / 90									
			Bos	82054200			Luc		2355481	[–] 23554 17.2	
				92111503	ø 266 x 22 x 34		Luc		82037300		
				TPM0012					92202100	ø 249 x 9 x 69.2	
141600			Bos	2395401	[–] 23954 19	Ø 266 mm	Luc		2355402	[–] 23554 17.2	
1.6 HDi 115	01/13→	84 / 114									
			Bos	2488301	[–] 24883 18	Ø 283 mm	Luc		2355481	[–] 23554 17.2	
				92111503	ø 266 x 22 x 34	Orga 12425→			92202100	ø 249 x 9 x 69.2	
				92111603	ø 283 x 26 x 34						
				TPM0012							
C3 Pluriel (HB_) 05/03→											
141700			Luc	2340902	[–] 23409 19.3		Luc		91059800	ø 203.2 x 38	
1.4	05/03→	54 / 73									
1.4 HDi	04/04→	50 / 68	Luc	82506100			Bos		91061600	ø 203.2 x 37	
1.4 Hybrid	05/05→	54 / 73									
			Luc	82063300			Bos		97031200		
				92111503	ø 266 x 22 x 34		Luc		97033500		
				TPM0012			Luc		84059801	bore ø 20.6 ø 203.2 x 38	
							Bos		84061602	bore ø 19 ø 203.2 x 37	
									94026600	ø 203,0 x 42	
141800			Luc	2340902	[–] 23409 19.3		Luc		2355402	[–] 23554 17.2	
1.6	05/03→	80 / 109									
			Luc	82506100			Luc		2355481	[–] 23554 17.2	
			Luc	82063300			Luc		82037300		
				92111503	ø 266 x 22 x 34		Luc		82062800		
				TPM0012					92111703	ø 246.5 x 9 x 35	
C4 I (LC_) 11/04→											
141900			Bos	2360001	[–] 23600 19	⊕ ESP	Luc		2355402	[–] 23554 17.2	
1.4 16V	11/04→	65 / 88									
1.6 HDi	11/04→	66 / 90	Bos	2395401	[–] 23954 19	⊖ ESP	Luc		2355481	[–] 23554 17.2	
			Bos	82054200			Bos		2415001	[–] 24150 17.6	
			Bos	82063800			Bos		82054300		
				92111503	ø 266 x 22 x 34	⊖ ESP			92133300	ø 249 x 9 x 67.2	Bosch
				92111603	ø 283 x 26 x 34	⊕ ESP			92202100	ø 249 x 9 x 69.2	Lucas
				TPM0012					92111703	ø 246.5 x 9 x 35	Lucas
									TPM0012		
142000			Bos	2360001	[–] 23600 19	⊕ autom. →Orga 10552 ⊕ man. ⊕ ESP	Luc		2355402	[–] 23554 17.2	
1.6 16V	11/04→	80 / 109	Bos	2395401	[–] 23954 19	Orga 10553→ ⊕ man. ⊕ ESP ⊕ man. ⊖ ESP	Luc		2355481	[–] 23554 17.2	

→

		kW / hp										
C4 I (LC_) 11/04→												
142000			Bos		**82054200**			Bos		**2415001**	[–] 24150 17.6	
1.6 16V	11/04→	80 / 109	Bos		**82063800**			Bos		**82054300**		
				PRO	**92111503**	ø 266 x 22 x 34	Orga 10553→ ⊕ man. ⊕ ESP ⊕ man. ⊖ ESP		ABS	**92133300**	ø 249 x 9 x 67.2	Bosch
				PRO	**92111603**	ø 283 x 26 x 34	⊕ autom. →Orga 10552 ⊕ man. ⊕ ESP		ABS	**92202100**	ø 249 x 9 x 69.2	Lucas
					TPM0012				PRO	**92111703**	ø 246.5 x 9 x 35	Lucas
										TPM0012		
142100			Bos		**2360001**	[–] 23600 19	⊕ ESP ⊕ autom.	Luc		**2355402**	[–] 23554 17.2	
1.6 16V Bio-Flex	09/07→	80 / 109	Bos		**2395401**	[–] 23954 19	⊖ ESP ⊕ man.	Luc	epad	**2355481**	[–] 23554 17.2	
			Bos		**82054200**			Bos		**2415001**	[–] 24150 17.6	
			Bos		**82063800**			Bos		**82054300**		
				PRO	**92111503**	ø 266 x 22 x 34	⊖ ESP ⊕ man.		ABS	**92133300**	ø 249 x 9 x 67.2	Bosch
				PRO	**92111603**	ø 283 x 26 x 34	⊕ ESP ⊕ autom.		ABS	**92202100**	ø 249 x 9 x 69.2	Lucas
					TPM0012				PRO	**92111703**	ø 246.5 x 9 x 35	Lucas
										TPM0012		
142200			Bos		**2360001**	[–] 23600 19	⊕ autom. →Orga 10552 ⊕ man. ⊕ ESP	Luc		**2355402**	[–] 23554 17.2	
1.6 Flex	02/09→	81 / 110	Bos		**2395401**	[–] 23954 19	Orga 10553→ ⊕ man. ⊕ ESP ⊕ man. ⊖ ESP	Luc	epad	**2355481**	[–] 23554 17.2	
			Bos		**82054200**			Bos		**2415001**	[–] 24150 17.6	
			Bos		**82063800**			Bos		**82054300**		
				PRO	**92111503**	ø 266 x 22 x 34	Orga 10553→ ⊕ man. ⊕ ESP ⊕ man. ⊖ ESP		ABS	**92133300**	ø 249 x 9 x 67.2	Bosch
				PRO	**92111603**	ø 283 x 26 x 34	⊕ autom. →Orga 10552 ⊕ man. ⊕ ESP		ABS	**92202100**	ø 249 x 9 x 69.2	Lucas
									PRO	**92111703**	ø 246.5 x 9 x 35	Lucas
142300			Bos		**2360001**	[–] 23600 19	→Orga 1205377 →2009-11-07	Luc		**2355402**	[–] 23554 17.2	
1.6 HDi	11/04→	80 / 109										
1.6 HDi	07/06→	85 / 116	Bos		**2509401**	[–] 25094 19	Orga 1205477→ 2009-11-08→	Luc	epad	**2355481**	[–] 23554 17.2	
2.0 16V	11/04→	103 / 140	Bos		**82054200**			Bos		**2415001**	[–] 24150 17.6	
			Bos		**82063800**			Bos		**82054300**		
				PRO	**92111603**	ø 283 x 26 x 34			ABS	**92133300**	ø 249 x 9 x 67.2	Bosch
					TPM0012				ABS	**92202100**	ø 249 x 9 x 69.2	Lucas
									PRO	**92111703**	ø 246.5 x 9 x 35	Lucas
										TPM0012		
142400			Bos		**2360001**	[–] 23600 19		Luc		**2355402**	[–] 23554 17.2	
1.6 THP 140	07/08→	103 / 140										
1.6 THP 150	07/08→	110 / 150	Bos		**82054200**			Luc	epad	**2355481**	[–] 23554 17.2	
2.0 16V	11/04→	100 / 136	Bos		**82063800**			Bos		**2415001**	[–] 24150 17.6	
				PRO	**92111603**	ø 283 x 26 x 34		Bos		**82054300**		
					TPM0012				ABS	**92133300**	ø 249 x 9 x 67.2	Bosch
									ABS	**92202100**	ø 249 x 9 x 69.2	Lucas
									PRO	**92111703**	ø 246.5 x 9 x 35	Lucas
										TPM0012		
142500			Bos		**2360001**	[–] 23600 19	⊕ autom.	Luc		**2355402**	[–] 23554 17.2	
1.6 VTi 120	07/08→	88 / 120	Bos		**2395401**	[–] 23954 19	⊕ man.	Luc	epad	**2355481**	[–] 23554 17.2	
			Bos		**82054200**			Bos		**2415001**	[–] 24150 17.6	

CITROËN

CITROËN

kW / hp

C4 I (LC_) 11/04→

142500			Bos		82063800			Bos		82054300		
1.6 VTi 120	07/08→	88 / 120		PRO	92111503	ø 266 x 22 x 34	⊕ man.		ABS	92133300	ø 249 x 9 x 67.2	Bosch
				PRO	92111603	ø 283 x 26 x 34	⊕ autom.		ABS	92202100	ø 249 x 9 x 69.2	Lucas
					TPM0012				PRO	92111703	ø 246.5 x 9 x 35	Lucas
										TPM0012		
142600			Ate		2358901	[–] 23589 19		Luc		2355402	[–] 23554 17.2	
2.0 16V	11/04→	130 / 177										
2.0 HDi	11/04→	100 / 136	Ate		82076800			Luc	epad	2355481	[–] 23554 17.2	
				PRO	92133203	ø 302 x 26 x 34.1		Bos		2415001	[–] 24150 17.6	
					TPM0012			Luc		82037300		
								Bos		82054300		
								Luc		82062800		
									ABS	92133300	ø 249 x 9 x 67.2	Bosch
									ABS	92202100	ø 249 x 9 x 69.2	Lucas
									PRO	92111703	ø 246.5 x 9 x 35	Lucas
										TPM0012		
142700			Ate		2358901	[–] 23589 19		Luc		2355402	[–] 23554 17.2	
2.0 HDi	07/08→	103 / 140										
			Ate		82076800			Luc	epad	2355481	[–] 23554 17.2	
				PRO	92133203	ø 302 x 26 x 34.1		Bos		2415001	[–] 24150 17.6	
								Luc		82037300		
								Bos		82054300		
								Luc		82062800		
									ABS	92133300	ø 249 x 9 x 67.2	Bosch
									ABS	92202100	ø 249 x 9 x 69.2	Lucas
									PRO	92111703	ø 246.5 x 9 x 35	Lucas
										TPM0012		

C4 II (B7) 11/09→

142800			TRW		2522001	[–] 25220 18.5		Luc		2355402	[–] 23554 17.2	⊖ elect. handbr.
1.4 VTi 95	11/09→	70 / 95		PRO	92111503	ø 266 x 22 x 34		Luc	epad	2355481	[–] 23554 17.2	⊖ elect. handbr.
					TPM0012			Luc		2492201	[–] 24922 17.3	⊕ elect. handbr.
								Luc		82037300		⊖ elect. handbr.
								Luc		82504400		⊕ elect. handbr.
									ABS	92168700	ø 268 x 12 x 73.2	⊕ elect. handbr.
										92194100	ø 249 x 9 x 73.2	⊖ elect. handbr.
142900			Ate		2453801	[–] 24538 18.8		Luc		2355402	[–] 23554 17.2	⊖ elect. handbr.
1.6 Flex	11/09→	81 / 110										
1.6 HDi 110	11/09→	82 / 112										
1.6 VTi 120	11/09→	88 / 120	Ate		82032000			Luc	epad	2355481	[–] 23554 17.2	⊖ elect. handbr.
1.6 VTi 120 LPG	09/11→	88 / 120										
2.0 Flex	11/09→	103 / 140		PRO	92111603	ø 283 x 26 x 34		Luc		2492201	[–] 24922 17.3	⊕ elect. handbr.
					TPM0012			Luc		82037300		⊖ elect. handbr.
								Luc		82504400		⊕ elect. handbr.
									ABS	92168700	ø 268 x 12 x 73.2	⊕ elect. handbr.
										92194100	ø 249 x 9 x 73.2	⊖ elect. handbr.

→

			kW / hp											
C4 II (B7) 11/09→														
		143000		Ate		**2453801**	[–] 24538 18.8		Luc		**2355402**	[–] 23554 17.2	⊖ elect. handbr.
1.6 HDi 115	07/12→	84 / 114		Ate		**82032000**			Luc		**2355481**	[–] 23554 17.2	⊖ elect. handbr.
					PRO	**92111603**	ø 283 x 26 x 34		Luc		**2492201**	[–] 24922 17.3	⊕ elect. handbr.
						TPM0012				ABS	**92168700**	ø 268 x 12 x 73.2	⊕ elect. handbr. except 19" -brake
											92194100	ø 249 x 9 x 73.2	⊖ elect. handbr.
										PRO	**92231303**	ø 290 x 12 x 35	⊕ elect. handbr. 19" -brake
											TPM0012		
		143100		TRW		**2522001**	[–] 25220 18.5	⊖ elect. handbr.	Luc		**2355402**	[–] 23554 17.2	⊖ elect. handbr.
1.6 HDi 90	11/09→	68 / 92		Ate		**2453801**	[–] 24538 18.8	⊕ elect. handbr.	Luc		**2355481**	[–] 23554 17.2	⊖ elect. handbr.
				Ate		**82032000**		⊕ elect. handbr.	Luc		**2492201**	[–] 24922 17.3	⊕ elect. handbr.
					PRO	**92111503**	ø 266 x 22 x 34	⊖ elect. handbr.	Luc		**82037300**		⊖ elect. handbr.
					PRO	**92111603**	ø 283 x 26 x 34	⊕ elect. handbr.	Luc		**82504400**		⊕ elect. handbr.
						TPM0012				ABS	**92168700**	ø 268 x 12 x 73.2	⊕ elect. handbr.
											92194100	ø 249 x 9 x 73.2	⊖ elect. handbr.
		143200		Ate		**2455701**	[–] 24557 19		Luc		**2355402**	[–] 23554 17.2	⊖ elect. handbr.
1.6 THP 155	11/09→	115 / 156		Ate		**82032000**			Luc		**2355481**	[–] 23554 17.2	⊖ elect. handbr.
2.0 HDi 150	11/09→	110 / 150				**92168500**	ø 302 x 26 x 34.2		Luc		**2492201**	[–] 24922 17.3	⊕ elect. handbr.
					PRO	**92168503**	ø 302 x 26 x 34.2		Luc		**82037300**		⊖ elect. handbr.
						TPM0012			Luc		**82504400**		⊕ elect. handbr.
										ABS	**92168700**	ø 268 x 12 x 73.2	⊕ elect. handbr.
											92194100	ø 249 x 9 x 73.2	⊖ elect. handbr.
		143300		Ate		**2453801**	[–] 24538 18.8		Luc		**2355402**	[–] 23554 17.2	⊖ elect. handbr.
2.0 Flex	11/09→	109 / 148		Ate		**82032000**			Luc		**2355481**	[–] 23554 17.2	⊖ elect. handbr.
					PRO	**92111603**	ø 283 x 26 x 34		Luc		**2492201**	[–] 24922 17.3	⊕ elect. handbr. 19'' -brake
						TPM0012				ABS	**92168700**	ø 268 x 12 x 73.2	⊕ elect. handbr.
											92194100	ø 249 x 9 x 73.2	⊖ elect. handbr.
										PRO	**92231303**	ø 290 x 12 x 35	⊕ elect. handbr. 19'' -brake
											TPM0012		
C4 AIRCROSS 08/10→														
		143400		Ake		**2358401**	[+] 23584 16		Ake		**2358202**	[+] 23582 15.5	→Orga 13114 →2012-10-04
1.6	04/12→	86 / 117											
1.6 Flex	08/10→	81 / 110		Ake		**82507300**			Ake		**2568801**	[+] 25688 14.3	Orga 13115→ 2012-10-05→
1.6 HDi 115	04/12→	84 / 114											
1.6 HDi 115 AWC	05/12→	84 / 114											
1.8 HDi 150	04/12→	110 / 150			PRO	**92257603**	ø 294 x 26 x 45.6		Ake		**82501800**		→Orga 13114 →2012-10-04
1.8 HDi 150 AWC	04/12→	110 / 150									**92167000**	ø 302 x 10 x 58.6	→Orga 13114 →2012-10-04
2.0	04/12→	110 / 150											
2.0 AWC	04/12→	110 / 150								PRO	**92167003**	ø 302 x 10 x 58.6	→Orga 13114 →2012-10-04
		143500		Ake		**2358401**	[+] 23584 16		Ake		**2358202**	[+] 23582 15.5	→Orga 13114
1.6 Flex	07/12→	90 / 122		Ake		**82507300**			Ake		**2568801**	[+] 25688 14.3	Orga 13115→
									Ake		**82501800**		→Orga 13114
											92167000	ø 302 x 10 x 58.6	→Orga 13114
										PRO	**92167003**	ø 302 x 10 x 58.6	→Orga 13114

CITROËN

CITROËN

kW / hp

C4 CACTUS 09/14→

143600													
1.2 THP 110	09/14→	81 / 110	Bos		2395401	[–] 23954 19	vented disc	Luc		2355402	[–] 23554 17.2	⊕ rear disc brake
1.2 VTi 75	09/14→	55 / 75	Man		2525001	[–] 25250 18.7	solid disc	Luc	epad	2355481	[–] 23554 17.2	⊕ rear disc brake
1.6 HDi 100	09/14→	73 / 99		PRO	92089103	ø 266 x 13 x 27.2				91077200	ø 203.2 x 39	⊕ rear drum brake
				PRO	92111503	ø 266 x 22 x 34				84067200	bore ø 20.6 ø 228 x 42	⊕ rear drum brake
					TPM0012			Bos		84067201	bore ø 20.6 ø 228 x 42	⊕ rear drum brake
									ABS	92202100	ø 249 x 9 x 69.2	⊕ rear disc brake
143700													
1.2 VTi 82	09/14→	60 / 82	Bos		2395401	[–] 23954 19		Luc		2355402	[–] 23554 17.2	⊕ rear disc brake
			Man		2525001	[–] 25250 18.7	MANDO -brake	Luc	epad	2355481	[–] 23554 17.2	⊕ rear disc brake
				PRO	92089103	ø 266 x 13 x 27.2	MANDO -brake			91077200	ø 203.2 x 39	8'' -brake ⊕ rear drum brake
				PRO	92111503	ø 266 x 22 x 34	BOSCH -brake	Bos		97031200		8'' -brake ⊕ rear drum brake
					TPM0012					84067200	bore ø 20.6 ø 228 x 42	8'' -brake ⊕ rear drum brake
									ABS	92202100	ø 249 x 9 x 69.2	⊕ rear disc brake
143800												
1.6 HDi 90	09/14→	68 / 92	Bos		2395401	[–] 23954 19				91077200	ø 203.2 x 39	8'' -brake
			Man		2525001	[–] 25250 18.7	MANDO -brake	Bos		97031200		8'' -brake
				PRO	92089103	ø 266 x 13 x 27.2	MANDO -brake			84067200	bore ø 20.6 ø 228 x 42	8'' -brake
				PRO	92111503	ø 266 x 22 x 34	BOSCH -brake					
					TPM0012							

C4 Coupe (LA_) 11/04→12/07

143900													
1.4 16V	11/04→	65 / 88	Bos		2360001	[–] 23600 19	⊕ ESP	Luc		2355402	[–] 23554 17.2		
1.6 16V	11/04→	80 / 109	Bos		2395401	[–] 23954 19	⊖ ESP	Luc	epad	2355481	[–] 23554 17.2		
1.6 HDi	11/04→	66 / 90	Bos		82054200			Bos		2415001	[–] 24150 17.6		
			Bos		82063800			Bos		82054300			
				PRO	92111503	ø 266 x 22 x 34	⊖ ESP		ABS	92133300	ø 249 x 9 x 67.2	Bosch	
				PRO	92111603	ø 283 x 26 x 34	⊕ ESP		ABS	92202100	ø 249 x 9 x 69.2	Lucas	
					TPM0012				PRO	92111703	ø 246.5 x 9 x 35	Lucas	
										TPM0012			
144000													
1.6 HDi	11/04→	80 / 109	Bos		2360001	[–] 23600 19	→Orga 1205377 →2009-11-07	Luc		2355402	[–] 23554 17.2		
			Bos		2509401	[–] 25094 19	Orga 1205477→ 2009-11-08→	Luc	epad	2355481	[–] 23554 17.2		
			Bos		82054200			Bos		2415001	[–] 24150 17.6		
			Bos		82063800			Bos		82054300			
				PRO	92111603	ø 283 x 26 x 34			ABS	92133300	ø 249 x 9 x 67.2	Bosch	
					TPM0012				ABS	92202100	ø 249 x 9 x 69.2	Lucas	
									PRO	92111703	ø 246.5 x 9 x 35	Lucas	
										TPM0012			
144100													
1.6 THP 150	07/08→	110 / 150	Bos		2360001	[–] 23600 19		Luc		2355402	[–] 23554 17.2		
1.6 VTi 120	07/08→	88 / 120	Bos		82054200			Luc	epad	2355481	[–] 23554 17.2		
2.0 16V	11/04→	100 / 136	Bos		82063800			Bos		2415001	[–] 24150 17.6		
				PRO	92111603	ø 283 x 26 x 34		Bos		82054300			
					TPM0012				ABS	92133300	ø 249 x 9 x 67.2	Bosch	
									ABS	92202100	ø 249 x 9 x 69.2	Lucas	

→

kW / hp

C4 Coupe (LA_) 11/04→12/07

144100														
1.6 THP 150	07/08→	110 / 150									PRO	92111703	ø 246.5 x 9 x 35	Lucas
1.6 VTi 120	07/08→	88 / 120										TPM0012		
2.0 16V	11/04→	100 / 136												
144200			Ate		2358901	[–] 23589 19		Luc		2355402	[–] 23554 17.2	
2.0 16V	11/04→	130 / 177												
2.0 HDi	11/04→	100 / 136	Ate		82076800			Luc	epad	2355481	[–] 23554 17.2	
2.0 HDi	07/08→	103 / 140		PRO	92133203	ø 302 x 26 x 34.1		Bos		2415001	[–] 24150 17.6	
					TPM0012			Luc		82037300		
								Bos		82054300		
								Luc		82062800		
									ABS	92133300	ø 249 x 9 x 67.2	Bosch
									ABS	92202100	ø 249 x 9 x 69.2	Lucas
									PRO	92111703	ø 246.5 x 9 x 35	Lucas
										TPM0012		
144300			Bos		2360001	[–] 23600 19		Luc		2355402	[–] 23554 17.2	
2.0 VTR	10/06→12/07	103 / 140		PRO	92111603	ø 283 x 26 x 34		Luc	epad	2355481	[–] 23554 17.2	
					TPM0012			Luc		82037300		
									ABS	92133300	ø 249 x 9 x 67.2	
									PRO	92111703	ø 246.5 x 9 x 35	Orga 1101877→
										TPM0012		

C4 Grand Picasso I (UA_) 10/06→

144400			Ate		2455801	[–] 24558 18	Orga 11921→ 2009-06-28→	Bos		2454001	[–] 24540 16.4	
1.6 16V	07/08→	103 / 140										
1.6 16V	10/08→	110 / 150	Ate		2455701	[–] 24557 19	→Orga 11920 →2009-06-27	Bos		82054300		
2.0 HDi 138	10/06→	100 / 136										
2.0 i 16V	10/06→	103 / 140	Ate		82032000				ABS	92168700	ø 268 x 12 x 73.2	
				PRO	92133203	ø 302 x 26 x 34.1						
					TPM0012							
144500			Ate		2453801	[–] 24538 18.8		Bos		2454001	[–] 24540 16.4	
1.6 HDi	10/06→	80 / 109										
1.6 HDi 110	09/10→	82 / 112	Ate		82032000			Bos		82054300		
1.6 VTi 120	07/08→	88 / 120										
1.8 i 16V	10/06→	92 / 125		PRO	92111603	ø 283 x 26 x 34			ABS	92168700	ø 268 x 12 x 73.2	
					TPM0012							
144600			Ate		2455801	[–] 24558 18		Bos		2454001	[–] 24540 16.4	
1.6 THP 155	09/10→	115 / 156										
2.0 HDi 150	07/09→	110 / 150	Ate		82032000			Bos		82054300		
2.0 HDi 165	09/10→	120 / 163										
				PRO	92133203	ø 302 x 26 x 34.1			ABS	92168700	ø 268 x 12 x 73.2	
					TPM0012							
144700			Ate		2455801	[–] 24558 18	Orga 11921→ 2009-06-29→	Bos		2454001	[–] 24540 16.4	
2.0 i 16V	01/10→	105 / 143										
			Ate		82032000				ABS	92168700	ø 268 x 12 x 73.2	
				PRO	92133203	ø 302 x 26 x 34.1						
					TPM0012							

C4 Grand Picasso II 09/13→

144800			Ate		2583601	[0] 25836 17	Ø 283 mm			2582701	[–] 25827 17.3	Ø 290 mm
1.6 HDi 115	09/13→	85 / 115										
1.6 HDi 90	09/13→	68 / 92		PRO	92232303	ø 304 x 28 x 48.1				2583901	[–] 25839 17.5	Ø 268 mm
1.6 THP 165	07/14→	121 / 165										
1.6 VTi 120	09/13→	88 / 120			TPM0012					TPM0012		
2.0 BlueHDi 150	09/13→	110 / 150										

CITROËN

CITROËN

30 kW / hp

C4 Grand Picasso II 09/13→

		144900	Ate		2583601	[o] 25836 17	Ø 283 mm			2582701	[–] 25827 17.3	Ø 290 mm
1.6 THP 155	09/13→	115 / 156		PRO	92232303	ø 304 x 28 x 48.1	Ø 304 mm			2583901	[–] 25839 17.5	Ø 268 mm
					TPM0012					TPM0012		

C4 PALLAS Stufenheck 07/06→12/11 → C4 Saloon, Page 268

C4 PALLAS três volumes 07/06→12/11 → C4 Saloon, Page 268

C4 Picasso I (UD_) 02/07→

		145000	Ate		2455801	[–] 24558 18	Orga 11921→ 2009-06-28→	Bos		2454001	[–] 24540 16.4	
1.6 16V	07/08→	110 / 150										
1.6 THP 140	07/08→	103 / 140	Ate		2455701	[–] 24557 19	→Orga 11920 →2009-06-27	Bos		82054300		
2.0 HDi 138	02/07→	100 / 136										
2.0 HDi 150	07/09→	110 / 150	Ate		82032000				ABS	92168700	ø 268 x 12 x 73.2	
2.0 i 16V	02/07→	103 / 140		PRO	92133203	ø 302 x 26 x 34.1				TPM0012		
					TPM0012							
		145100	Ate		2453801	[–] 24538 18.8		Bos		2454001	[–] 24540 16.4	
1.6 HDi	02/07→	80 / 109										
1.6 HDi 110	09/10→	82 / 112	Ate		82032000			Bos		82054300		
1.6 VTi 120	07/08→	88 / 120										
1.8 i 16V	02/07→	92 / 125		PRO	92111603	ø 283 x 26 x 34			ABS	92168700	ø 268 x 12 x 73.2	
					TPM0012					TPM0012		
		145200	Ate		2455801	[–] 24558 18		Bos		2454001	[–] 24540 16.4	
1.6 THP 155	09/10→	115 / 156										
2.0 HDi 165	09/10→	120 / 163	Ate		82032000			Bos		82054300		
				PRO	92133203	ø 302 x 26 x 34.1			ABS	92168700	ø 268 x 12 x 73.2	
					TPM0012					TPM0012		
		145300	Ate		2453801	[–] 24538 18.8		Bos		2454001	[–] 24540 16.4	
1.8 i 16V	01/09→	92 / 125										
			Ate		82032000			Bos		82054300		
				PRO	92111603	ø 283 x 26 x 34			ABS	92168700	ø 268 x 12 x 73.2	
					TPM0012							

C4 Picasso II 02/13→

		145400	Ate		2583601	[o] 25836 17	Ø 283 mm			2582701	[–] 25827 17.3	Ø 290 mm
1.6 HDi 115	02/13→	85 / 115										
1.6 HDi 90	02/13→	68 / 92		PRO	92232303	ø 304 x 28 x 48.1	Ø 304 mm			2583901	[–] 25839 17.5	Ø 268 mm
1.6 THP 155	02/13→	115 / 156										
1.6 VTi 120	02/13→	88 / 120			TPM0012					TPM0012		
		145500	Ate		2583601	[o] 25836 17	Ø 283 mm			2582701	[–] 25827 17.3	Ø 290 mm
1.6 THP 165	06/13→	120 / 163										
1.6 THP 165	07/14→	121 / 165		PRO	92232303	ø 304 x 28 x 48.1				2583901	[–] 25839 17.5	Ø 268 mm
2.0 BlueHDi 150	09/13→	110 / 150										
2.0 HDI 140	06/13→	101 / 138										
2.0 HDI 150	06/13→	111 / 150			TPM0012					TPM0012		

C4 Saloon 07/06→12/11

		145600	Ate		2455801	[–] 24558 18		Luc		2492201	[–] 24922 17.3	
1.6	09/13→	120 / 163										
			Ate		82032000				ABS	92168700	ø 268 x 12 x 73.2	
					92168500	ø 302 x 26 x 34.2			PRO	92231303	ø 290 x 12 x 35	
				PRO	92168503	ø 302 x 26 x 34.2				TPM0012		Ø 290 mm
					TPM0012							
		145700	Bos		2360001	[–] 23600 19	→Orga 1205377 →2009-11-07	Luc		2355402	[–] 23554 17.2	→Orga 1205677 →2009-11-10
1.6 16V	07/06→	80 / 109										
1.6 HDi	07/06→	80 / 109	Bos		2509401	[–] 25094 19	Orga 1205477→ 2009-11-08→	Luc	epad	2355481	[–] 23554 17.2	→Orga 1205677 →2009-11-10
1.6 HDi	07/06→	85 / 116										
2.0 16V	07/06→	103 / 140										
2.0 Flex	10/08→01/13	109 / 148	Bos		82054200			Bos		2454001	[–] 24540 16.4	Orga 1205777→ 2009-11-11→
			Bos		82063800			Bos		82054300		Orga 1205777→ 2009-11-11→
				PRO	92111603	ø 283 x 26 x 34			ABS	92133300	ø 249 x 9 x 67.2	Bosch

→

30 kW / hp

C4 Saloon 07/06→12/11

145700													
1.6 16V	07/06→	80 / 109		TPM0012					92202100	ø 249 x 9 x 69.2			
1.6 HDi	07/06→	80 / 109							92111703	ø 246.5 x 9 x 35	Lucas		
1.6 HDi	07/06→	85 / 116							TPM0012				
2.0 16V	07/06→	103 / 140											
2.0 Flex	10/08→01/13	109 / 148											
145800													
1.6 THP	07/14→	121 / 165	Ate	2455801	[–] 24558 18		Luc	2492201	[–] 24922 17.3				
			Ate	82032000				92168700	ø 268 x 12 x 73.2	⊖ rim size 19"			
				92168500	ø 302 x 26 x 34.2			92231303	ø 290 x 12 x 35	19'' -brake			
				92168503	ø 302 x 26 x 34.2			TPM0012		19'' -brake			
				TPM0012									
145900													
2.0 16V	07/07→09/08	105 / 143	Bos	2360001	[–] 23600 19	→Orga 12053 →2009-11-08	Luc	2355402	[–] 23554 17.2	→Orga 12056 →2009-11-11			
				92111603	ø 283 x 26 x 34		Luc	2355481	[–] 23554 17.2	→Orga 12056 →2009-11-11			
				TPM0012			Luc	82037300					
								92133300	ø 249 x 9 x 67.2	Orga 10647→ 2006-01-02→			
								92111703	ø 246.5 x 9 x 35	Orga 11018→ 2007-01-08→ →Orga 12056 →2009-11-11			
								TPM0012					
146000													
2.0 Flex	07/06→	103 / 140	Bos	2360001	[–] 23600 19	→Orga 1205377 →2009-11-07	Luc	2355402	[–] 23554 17.2	→Orga 1205677 →2009-11-10			
			Bos	2509401	[–] 25094 19	Orga 1205477→ 2009-11-08→	Luc	2355481	[–] 23554 17.2	→Orga 1205677 →2009-11-10			
			Bos	82054200			Bos	2454001	[–] 24540 16.4	Orga 1205777→ 2009-11-11→			
			Bos	82063800			Bos	82054300		Orga 1205777→ 2009-11-11→			
				92111603	ø 283 x 26 x 34			92133300	ø 249 x 9 x 67.2	Bosch			
				TPM0012				92202100	ø 249 x 9 x 69.2				
								92111703	ø 246.5 x 9 x 35	Lucas			
146100													
2.0 Flex	09/13→	111 / 151	Ate	2453801	[–] 24538 18.8		Luc	2355402	[–] 23554 17.2	⊖ elect. handbr.			
			Ate	82032000			Luc	2355481	[–] 23554 17.2	⊖ elect. handbr.			
				92111603	ø 283 x 26 x 34		Luc	2492201	[–] 24922 17.3	⊕ elect. handbr.			
				TPM0012				92168700	ø 268 x 12 x 73.2	⊕ elect. handbr.			
								92194100	ø 249 x 9 x 73.2	⊖ elect. handbr.			
								92231303	ø 290 x 12 x 35	⊕ elect. handbr.			
								TPM0012		Ø 290 mm			
146200													
2.0 HDi	04/07→12/11	81 / 110	Bos	2360001	[–] 23600 19	Orga 1101877→ →Orga 1205377	Luc	2355402	[–] 23554 17.2	Orga 10647UW→			
										Orga 1233477→			
										Orga 1143188→			
			Bos	2509401	[–] 25094 19	Orga 1205477→	Luc	2355481	[–] 23554 17.2	Orga 10647UW→			
										Orga 1233477→			
										Orga 1143188→			
				92111603	ø 283 x 26 x 34	Orga 1101877→ →Orga 1205377	Bos	2415001	[–] 24150 17.6	Orga 1007388→ →Orga 1065688			
				TPM0012			Bos	2473701	[–] 24737 18	Orga 1101877→ →Orga 1205677			
							Luc	82037300					
								92133300	ø 249 x 9 x 67.2	Orga 1007388→ →Orga 1065688			
										Orga 10647UW→			
								92202100	ø 249 x 9 x 69.2	Orga 1143188→			
								92111703	ø 246.5 x 9 x 35	Orga 1101877→ →Orga 1205677			
										Orga 1233477→			

C4 Stufenheck 07/06→12/11 → C4 Saloon, Page 268

C5 I (DC_) 03/01→08/04

146300													
1.8 16V (DC6FZB, DC6FZE)	03/01→08/04	85 / 115	Bos	2327601	[+] 23276 17.5		Cit	2330501	[–] 23305 15.4				

CITROËN

CITROËN

		kW / hp											
C5 I (DC_) 03/01→08/04													
		146300	Bos		82063800			Cit		82059800		
1.8 16V (DC6FZB, DC6FZE)	03/01→08/04	85 / 115	Bos		82510100					92107900	ø 275 x 14 x 62	
				PRO	92111503	ø 266 x 22 x 34				TPM0012		
					TPM0012							
		146400	Bos		2327701	[+] 23277 17.7		Cit		2330501	[–] 23305 15.4	
2.0 16V (DCRFNC, DCRFNF)	03/01→08/04	100 / 136										
2.0 16V HPi (DCRLZB)	03/01→08/04	103 / 140										
2.0 HDi	03/01→08/04	79 / 107	Bos		82063800			Cit		82059800		
2.0 HDi (DCRHYB)	03/01→08/04	66 / 90										
2.0 HDi (DCRHZB, DCRHZE)	03/01→08/04	80 / 109	Bos		82510100					92107900	ø 275 x 14 x 62	
				PRO	92111603	ø 283 x 26 x 34				TPM0012		
					TPM0012							
		146500	Bos		2327301	[+] 23273 18		Cit		2330501	[–] 23305 15.4	
2.2 HDi (DC4HXB, DC4HXE)	03/01→08/04	98 / 133										
3.0 V6 (DCXFXC, DCXFXF)	03/01→08/04	152 / 207	Bos		82063800			Cit		82059800		
			Bos		82510100					92107900	ø 275 x 14 x 62	
					92107800	ø 288 x 28 x 34.2				TPM0012		
					TPM0012							
		146600	Bos		2327301	[+] 23273 18		Cit		2330501	[–] 23305 15.4	
3.0 Carlsson HP	08/01→08/04	173 / 235	Bos		82063800			Cit		82059800		
			Bos		82510100					92107900	ø 275 x 14 x 62	
					92107800	ø 288 x 28 x 34.2						
C5 I Break (DE_) 06/01→08/04													
		146700	Bos		2327701	[+] 23277 17.7		Cit		2330501	[–] 23305 15.4	
1.8 16V (DE6FZB, DE6FZE)	06/01→08/04	85 / 115										
2.0 16V (DERFNF, DERFNC, RERFNC)	06/01→08/04	100 / 136	Bos		82063800			Cit		82059800		
2.0 16V HPi (DERLZB)	06/01→08/04	103 / 140										
2.0 HDi	06/01→08/04	80 / 109	Bos		82510100					92107900	ø 275 x 14 x 62	
2.0 HDi (DERHSB, DERHSE)	06/01→08/04	79 / 107										
2.0 HDi (DERHYB)	06/01→08/04	66 / 90		PRO	92111603	ø 283 x 26 x 34				TPM0012		
					TPM0012							
		146800	Bos		2327301	[+] 23273 18		Cit		2330501	[–] 23305 15.4	
2.2 HDi (DE4HXB, DE4HXE)	06/01→08/04	98 / 133										
3.0 Carlsson	09/03→08/04	173 / 235	Bos		82063800			Cit		82059800		
3.0 V6 (DEXFXC, DEXFXF)	06/01→08/04	152 / 207	Bos		82510100					92107900	ø 275 x 14 x 62	
					92107800	ø 288 x 28 x 34.2				TPM0012		
					TPM0012							
C5 I Estate (DE_) 06/01→08/04 → C5 I Break (DE_), Page 270													
C5 II (RC_) 09/04→04/07													
		146900	Bos		2327601	[+] 23276 17.5		Cit		2330501	[–] 23305 15.4	
1.6 HDi (RC8HZB)	09/04→	80 / 109										
1.8 16V	09/05→	92 / 125	Bos		82063800			Cit		82059800		
1.8 16V (RC6FZB)	09/04→	85 / 116	Bos		82510100					92107900	ø 275 x 14 x 62	
				PRO	92111503	ø 266 x 22 x 34				TPM0012		
					TPM0012							
		147000	Bos		2327701	[+] 23277 17.7		Cit		2330501	[–] 23305 15.4	
2.0 16V (RCRFJB, RCRFJC)	09/04→	103 / 140										
			Bos		82063800			Cit		82059800		
			Bos		82510100					92107900	ø 275 x 14 x 62	
				PRO	92111603	ø 283 x 26 x 34				TPM0012		
					TPM0012							

→

		kW / hp											
C5 II (RC_) 09/04→04/07													
		147100	Bos		2327301	[+] 23273 18		Cit		2330501	[–] 23305 15.4	
2.0 HDi (RCRHRH)	09/04→	100 / 136										
2.2 HDi	04/06→	125 / 170	Bos		82063800			Cit		82059800		
2.2 HDi (RC4HXE)	09/04→	98 / 133										
3.0 V6 (RCXFUF)	09/04→	152 / 207	Bos		82510100					92107900	ø 275 x 14 x 62	
					92107800	ø 288 x 28 x 34.2				TPM0012		
					TPM0012							
		147200	Bos		2327301	[+] 23273 18		Cit		2330501	[–] 23305 15.4	
3.0 Carlsson HP	09/04→	173 / 235										
			Bos		82063800			Cit		82059800		
			Bos		82510100					92107900	ø 275 x 14 x 62	
					92107800	ø 288 x 28 x 34.2						
		147300	Bos		2327301	[+] 23273 18		Cit		2330501	[–] 23305 15.4	
3.0 V6	10/04→04/07	155 / 211			92107800	ø 288 x 28 x 34.2				92107900	ø 275 x 14 x 62	
					TPM0012					TPM0012		
C5 II Break (RE_) 09/04→													
		147400	Bos		2327701	[+] 23277 17.7		Cit		2330501	[–] 23305 15.4	
1.6 HDi (RE8HZB)	09/04→	80 / 109										
1.8 16V	09/05→	92 / 125	Bos		82063800			Cit		82059800		
1.8 16V (RE6FZB)	09/04→	85 / 116										
2.0 16V (RERFJB, RERFJC)	09/04→	103 / 140	Bos		82510100					92107900	ø 275 x 14 x 62	
				PRO	92111603	ø 283 x 26 x 34				TPM0012		
					TPM0012							
		147500	Bos		2327301	[+] 23273 18		Cit		2330501	[–] 23305 15.4	
2.0 HDi (RERHRH)	09/04→	100 / 136										
2.2 HDi	04/06→	125 / 170	Bos		82063800			Cit		82059800		
2.2 HDi (RE4HXE)	09/04→	98 / 133										
3.0 V6 (REXFUF)	09/04→	152 / 207	Bos		82510100					92107900	ø 275 x 14 x 62	
					92107800	ø 288 x 28 x 34.2				TPM0012		
					TPM0012							
		147600	Bos		2327301	[+] 23273 18		Cit		2330501	[–] 23305 15.4	
2.2 HDi	05/06→	120 / 163										
3.0 V6	10/04→04/07	155 / 211			92107800	ø 288 x 28 x 34.2				92107900	ø 275 x 14 x 62	
					TPM0012					TPM0012		
		147700	Bos		2327301	[+] 23273 18		Cit		2330501	[–] 23305 15.4	
3.0	09/04→	173 / 235										
			Bos		82063800			Cit		82059800		
			Bos		82510100					92107900	ø 275 x 14 x 62	
					92107800	ø 288 x 28 x 34.2						
C5 III (RD_) 02/08→													
		147800	Ate		2433201	[+] 24332 18.8		Luc		2413501	[–] 24135 17.8	⊖ elect. handbr.
1.6	03/11→	120 / 163										
			Ate		82032000			Ate		2413701	[–] 24137 16.7	⊕ elect. handbr.
					92157000	ø 304 x 28 x 48		Ate	epad	2413781	[–] 24137 16.7	⊕ elect. handbr.
					TPM0012			Ate		82503500		⊕ elect. handbr.
									PRO	92129603	ø 290 x 12 x 35	
										TPM0012		
		147900	Ate		2433201	[+] 24332 18.8		Luc		2413501	[–] 24135 17.8	⊖ elect. handbr.
1.6 HDi	02/08→	80 / 109										
1.6 HDi 110	07/10→	82 / 112	Ate		82032000			Ate		2413701	[–] 24137 16.7	⊕ elect. handbr.
1.6 HDi 115	01/12→	84 / 114										
1.6 THP 155	04/09→	115 / 156	Ate		82062900			Ate	epad	2413781	[–] 24137 16.7	⊕ elect. handbr.
1.6 VTi 120	07/10→	88 / 120										
1.8 16V	02/08→	92 / 125										
2.0 16V	02/08→	103 / 140										
2.0 16V BioFlex	02/08→	103 / 140										

CITROËN

CITROËN

		kW / hp									
C5 III (RD_) 02/08→											
2.0 HDi	02/08→	100 / 136		92157000	ø 304 x 28 x 48		Luc	82075400		⊖ elect. handbr.
2.0 HDi 140	04/09→	103 / 140		TPM0012			Ate	82062900		⊕ elect. handbr.
2.0 HDi 165	04/09→	120 / 163					Ate	82503500		⊕ elect. handbr.
								PRO 92129603	ø 290 x 12 x 35	
								TPM0012		
		148000	Ate	2433201	[+] 24332 18.8	→Orga 12774	Luc	2413501	[–] 24135 17.8	⊖ elect. handbr.
1.6 THP 150	07/10→	110 / 150	Ate	82032000			Ate	2413701	[–] 24137 16.7	⊕ elect. handbr.
				92157000	ø 304 x 28 x 48		Ate	epad 2413781	[–] 24137 16.7	⊕ elect. handbr.
				TPM0012			Ate	82503500		⊕ elect. handbr.
								PRO 92129603	ø 290 x 12 x 35	
								TPM0012		
		148100	Luc	2413301	[+] 24133 17.7		Luc	2413501	[–] 24135 17.8	⊖ elect. handbr.
2.2 HDi	02/08→	125 / 170	Luc	82506000			Ate	2413701	[–] 24137 16.7	⊕ elect. handbr.
2.7 HDi	02/08→	150 / 204		PRO 92129503	ø 330 x 30 x 48		Ate	epad 2413781	[–] 24137 16.7	⊕ elect. handbr.
3.0 V6	02/08→	155 / 211		TPM0012			Luc	82075400		⊖ elect. handbr.
							Ate	82062900		⊕ elect. handbr.
							Ate	82503500		⊕ elect. handbr.
								PRO 92129603	ø 290 x 12 x 35	
								TPM0012		
		148200	Luc	2413303	[+] 24133 18.3		Luc	2413501	[–] 24135 17.8	⊖ elect. handbr.
2.2 HDi 200	07/10→	150 / 204	Luc	82506000			Ate	2413701	[–] 24137 16.7	⊕ elect. handbr.
				PRO 92129503	ø 330 x 30 x 48		Ate	epad 2413781	[–] 24137 16.7	⊕ elect. handbr.
				TPM0012			Luc	82075400		⊖ elect. handbr.
							Ate	82062900		⊕ elect. handbr.
							Ate	82503500		⊕ elect. handbr.
								PRO 92129603	ø 290 x 12 x 35	
								TPM0012		
		148300	Ate	2507001	[o] 25070 17	Orga 12776→	Luc	2413501	[–] 24135 17.8	⊖ elect. handbr.
3.0 HDi 240	04/09→	177 / 241	Ate	2506901	[+] 25069 17	→Orga 12775	Ate	2413701	[–] 24137 16.7	⊕ elect. handbr.
			Ate	82062900			Ate	epad 2413781	[–] 24137 16.7	⊕ elect. handbr.
			Ate	82517900			Luc	82075400		⊖ elect. handbr.
				92157000	ø 304 x 28 x 48		Ate	82062900		⊕ elect. handbr.
				TPM0012			Ate	82503500		⊕ elect. handbr.
								PRO 92129603	ø 290 x 12 x 35	
								TPM0012		
C5 III Break (TD_) 02/08→											
		148400	Ate	2433201	[+] 24332 18.8		Luc	2413501	[–] 24135 17.8	⊖ elect. handbr.
1.6 HDi	02/08→	80 / 109	Ate	82032000			Ate	2413701	[–] 24137 16.7	⊕ elect. handbr.
1.6 HDi 110	07/10→	82 / 112	Ate	82062900			Ate	epad 2413781	[–] 24137 16.7	⊕ elect. handbr.
1.6 HDi 115	01/12→	84 / 114		92157000	ø 304 x 28 x 48		Luc	82075400		⊖ elect. handbr.
1.6 THP 155	04/09→	115 / 156								
1.6 VTI 120	07/10→	88 / 120								
1.8 16V	02/08→	92 / 125								
2.0 16V	02/08→	103 / 140								
2.0 16V BioFlex	02/08→	103 / 140								
2.0 HDi	02/08→	100 / 136								
2.0 HDi 140	04/09→	103 / 140								

→

C5 III Break (TD_) 02/08→

		kW / hp											
2.0 HDi 165	04/09→	120 / 163			TPM0012			Ate		82062900			⊕ elect. handbr.
								Ate		82503500			⊕ elect. handbr.
									PRO	92129603	ø 290 x 12 x 35		
										TPM0012			
		148500	Ate		2433201	[+] 24332 18.8	→Orga 12774	Luc		2413501	[–] 24135 17.8		⊖ elect. handbr.
1.6 THP 150	04/09→	110 / 150											
2.0 HDi 150	04/09→	110 / 150	Ate		82032000			Ate		2413701	[–] 24137 16.7		⊕ elect. handbr.
					92157000	ø 304 x 28 x 48		Ate	epad	2413781	[–] 24137 16.7		⊕ elect. handbr.
					TPM0012			Ate		82503500			⊕ elect. handbr.
									PRO	92129603	ø 290 x 12 x 35		
										TPM0012			
		148600	Luc		2413301	[+] 24133 17.7		Luc		2413501	[–] 24135 17.8		⊖ elect. handbr.
2.2 HDi	02/08→	125 / 170											
2.7 HDi	02/08→	150 / 204	Luc		82506000			Ate		2413701	[–] 24137 16.7		⊕ elect. handbr.
3.0 V6	02/08→	155 / 211		PRO	92129503	ø 330 x 30 x 48		Ate	epad	2413781	[–] 24137 16.7		⊕ elect. handbr.
					TPM0012			Luc		82075400			⊖ elect. handbr.
								Ate		82062900			⊕ elect. handbr.
								Ate		82503500			⊕ elect. handbr.
									PRO	92129603	ø 290 x 12 x 35		
										TPM0012			
		148700	Luc		2413301	[+] 24133 17.7		Luc		2413501	[–] 24135 17.8		⊖ elect. handbr.
2.2 HDi 165	02/08→	120 / 163	Luc		2413303	[+] 24133 18.3		Ate		2413701	[–] 24137 16.7		⊕ elect. handbr.
				PRO	92129503	ø 330 x 30 x 48		Ate	epad	2413781	[–] 24137 16.7		⊕ elect. handbr.
					TPM0012			Ate		82503500			⊕ elect. handbr.
									PRO	92129603	ø 290 x 12 x 35		
										TPM0012			
		148800	Luc		2413303	[+] 24133 18.3		Luc		2413501	[–] 24135 17.8		⊖ elect. handbr.
2.2 HDi 200	07/10→	150 / 204	Luc		82506000			Ate		2413701	[–] 24137 16.7		⊕ elect. handbr.
				PRO	92129503	ø 330 x 30 x 48		Ate	epad	2413781	[–] 24137 16.7		⊕ elect. handbr.
					TPM0012			Luc		82075400			⊖ elect. handbr.
								Ate		82062900			⊕ elect. handbr.
								Ate		82503500			⊕ elect. handbr.
									PRO	92129603	ø 290 x 12 x 35		
										TPM0012			
		148900	Ate		2507001	[o] 25070 17	Orga 12776→	Luc		2413501	[–] 24135 17.8		⊖ elect. handbr.
3.0 HDi 240	04/09→	177 / 241	Ate		2506901	[+] 25069 17	→Orga 12775	Ate		2413701	[–] 24137 16.7		⊕ elect. handbr.
			Ate		82062900			Ate	epad	2413781	[–] 24137 16.7		⊕ elect. handbr.
			Ate		82517900			Luc		82075400			⊖ elect. handbr.
					92157000	ø 304 x 28 x 48		Ate		82062900			⊕ elect. handbr.
					TPM0012			Ate		82503500			⊕ elect. handbr.
									PRO	92129603	ø 290 x 12 x 35		
										TPM0012			

CITROËN

CITROËN

		kW / hp									
C5 III Saloon (RD_) 02/08→ → C5 III (RD_), Page 271											
C5 III Stufenheck (RD_) 02/08→ → C5 III (RD_), Page 271											
C6 (TD_) 09/05→12/10											
		149000	Luc		**2413301**	[+] 24133 17.7		Luc		**2446201**	[–] 24462 16.7
2.2 HDi	06/06→	120 / 163	Luc		**2413303**	[+] 24133 18.3			PRO	**92197103**	ø 302 x 22 x 35
				PRO	**92129503**	ø 330 x 30 x 48				**TPM0012**	
					TPM0012						
		149100	Luc		**2413301**	[+] 24133 17.7		Luc		**2446201**	[–] 24462 16.7
2.2 HDi	06/06→	125 / 170									
2.7 HDi	09/05→	150 / 204	Luc		**82506000**			Luc		**82072900**	
3.0 V6	09/05→	155 / 211	Luc		**82063300**			Luc		**82063300**	
				PRO	**92129503**	ø 330 x 30 x 48			PRO	**92197103**	ø 302 x 22 x 35
					TPM0012					**TPM0012**	
		149200	Ate		**2507001**	[o] 25070 17	Orga 12776→	Luc		**2446201**	[–] 24462 16.7
3.0 HDi	04/09→	177 / 241	Ate		**2506901**	[+] 25069 17	→Orga 12775	Luc		**82072900**	
			Ate		**82517900**			Luc		**82063300**	
				PRO	**92256003**	ø 340 x 30 x 48			PRO	**92197103**	ø 302 x 22 x 35
					TPM0012					**TPM0012**	
		149300	Ate		**2507001**	[o] 25070 17	Orga 12776→	Luc		**2446201**	[–] 24462 16.7
3.0 HDi	06/09→12/10	155 / 211	Ate		**2506901**	[+] 25069 17	→Orga 12775	Luc		**82063300**	
			Ate		**82517900**				PRO	**92197103**	ø 302 x 22 x 35
				PRO	**92256003**	ø 340 x 30 x 48				**TPM0012**	
					TPM0012						
C6 Saloon (TD_) 09/05→12/10 → C6 (TD_), Page 274											
C6 Stufenheck (TD_) 09/05→12/10 → C6 (TD_), Page 274											
C8 (EA_, EB_) 07/02→											
		149400	Luc		**2026101**	[+] 20261 19.3		Luc		**2096110**	[–] 20961 17.4
2.0	07/02→	100 / 136									
2.0 16V	09/05→	103 / 140									
2.0 16V	09/05→	104 / 141	Luc		**82055400**		2x			**82062700**	
2.0 HDi	07/02→	79 / 107									
2.0 HDi	02/07→	88 / 120	Gir		**82059500**			Luc		**82062800**	
2.0 HDi 135	03/06→	100 / 136									
2.2	07/02→	116 / 158	Luc		**82063500**				PRO	**92118203**	ø 272 x 12 x 28
2.2 HDi	07/02→	94 / 128			**92115000**	ø 285 x 28 x 43.5					
		149500	Luc		**2026101**	[+] 20261 19.3		Luc		**2096110**	[–] 20961 17.4
2.0 HDi	07/02→	80 / 109			**92115000**	ø 285 x 28 x 43.5			PRO	**92118203**	ø 272 x 12 x 28
		149600	Luc		**2483901**	[+] 24839 19.4		Luc		**2096110**	[–] 20961 17.4
2.0 HDi 165	03/06→	120 / 163									
2.2 HDi	06/06→	125 / 170	Luc		**82055400**		2x			**82062700**	
								Luc		**82062800**	
									PRO	**92118203**	ø 272 x 12 x 28
		149700	Luc		**2483901**	[+] 24839 19.4		Luc		**2096110**	[–] 20961 17.4
2.2 HDi	06/07→	120 / 163	Luc		**82055400**				PRO	**92118203**	ø 272 x 12 x 28
		149800	Bre		**2357501**	[+] 23575 16		Luc		**2096110**	[–] 20961 17.4
3.0 V6	07/02→	150 / 204	Luc		**82055400**		2x			**82062700**	
			Bre		**82072400**			Luc		**82062800**	
				PRO	**92118100**	ø 310 x 32 x 43.5			PRO	**92118203**	ø 272 x 12 x 28

	30	kW / hp									
C15 (VD-_) 07/86→12/05											
1.8 D	07/86→12/00	149900 44 / 60	Luc		2098901	[+] 20989 17.7			91029200	ø 228.6 x 42	
			Luc		82029000			Ben	97027800		
				PRO	92029803	ø 247 x 10 x 34			84029200	bore ø 22.2 ø 228.6 x 42	
					TPM0012				94010300	ø 229,0 x 50.5	
1.9 D	10/00→10/02	150000 51 / 69	Luc		2098901	[+] 20989 17.7			91029200	ø 228.6 x 42	
				PRO	92029803	ø 247 x 10 x 34			84029200	bore ø 22.2 ø 228.6 x 42	
					TPM0012				94010300	ø 229,0 x 50.5	
1.9 D	12/00→12/05	150100 44 / 60	Luc		2098901	[+] 20989 17.7			91029200	ø 228.6 x 42	
			Luc		82029000			Ben	97027800		
				PRO	92029803	ø 247 x 10 x 34			84029200	bore ø 22.2 ø 228.6 x 42	
									94010300	ø 229,0 x 50.5	
C15 Estate 04/87→08/00											
1.8 D	04/87→08/00	150200 44 / 60	Luc		2098901	[+] 20989 17.7			91029200	ø 228.6 x 42	
			Luc		82029000			Ben	97027800		
				PRO	92029803	ø 247 x 10 x 34			84029200	bore ø 22.2 ø 228.6 x 42	
					TPM0012				94010300	ø 229,0 x 50.5	
C15 Kombi 04/87→08/00 → C15 Estate, Page 275											
C-CROSSER (EP_) 02/07→											
2.0 2.0 All-wheel Drive	11/10→ 11/10→	150300 108 / 147 108 / 147	Ake		2136301	[+] 21363 15.7		Ake	2358202	[+] 23582 15.5	
			Ake		2137001	[+] 21370 15.7	optional	Ake	82501800		
			Ake		82032700				91073400	ø 170 x 32	
				PRO	92135203	ø 294 x 24 x 45.6					
2.2 HDi 2.4 16V	02/07→ 08/08→	150400 115 / 156 125 / 170	Ake		2136301	[+] 21363 15.7		Ake	2358202	[+] 23582 15.5	
			Ake		2137001	[+] 21370 15.7	optional	Ake	82501800		
			Ake		82032700				92167000	ø 302 x 10 x 58.6	
				PRO	92135203	ø 294 x 24 x 45.6			PRO 92167003	ø 302 x 10 x 58.6	
									91068300	ø 190 x 32	
C-CROSSER ENTERPRISE 01/09→											
2.2 HDi 2.4 16V	01/09→ 01/09→	150500 115 / 156 125 / 170	Ake		2136301	[+] 21363 15.7		Ake	2358202	[+] 23582 15.5	
			Ake		2137001	[+] 21370 15.7	optional	Ake	82501800		
			Ake		82032700				92167000	ø 302 x 10 x 58.6	
				PRO	92135203	ø 294 x 24 x 45.6			PRO 92167003	ø 302 x 10 x 58.6	
									91068300	ø 190 x 32	
C-ELYSEE 11/12→											
1.2 VTi 72 1.6 HDI 92 1.6 VTi 115	11/12→ 11/12→ 11/12→	150600 53 / 72 68 / 92 85 / 115	Bos		2395401	[–] 23954 19	Bosch		91077200	ø 203.2 x 39	⊕ ABS
			Man		2525001	[–] 25250 18.7	Mando	Bos	97031200		
				PRO	92111503	ø 266 x 22 x 34	Bosch				
					TPM0012						
C-ZERO 10/10→											
C-Zero C-Zero	10/10→ 10/10→	150700 35 / 48 47 / 64	Sum		2442302	[+] 24423 14.7					
DISPATCH (U6U) 10/95→08/00 → JUMPY (U6U), Page 287											
DISPATCH 01/07→ → JUMPY, Page 287											

CITROËN

CITROËN

kW / hp

DISPATCH Box 01/07→ → JUMPY Box, Page 289

DISPATCH Kasten 01/07→ → JUMPY Box, Page 289

DISPATCH Platform/Chassis (BU_, BV_, BW_, BX_) 10/99→10/06 → JUMPY Platform/Chassis (BU_, BV_, BW_, BX_), Page 289

DISPATCH Pritsche/Fahrgestell (BU_, BV_, BW_, BX_) 10/99→10/06 → JUMPY Platform/Chassis (BU_, BV_, BW_, BX_), Page 289

DISPATCH Van (BS_, BT_, BY_, BZ_) 10/95→08/00 → JUMPY Box (BS_, BT_, BY_, BZ_), Page 288

DS3 11/09→

		150800	Bos		**2395401**	[–] 23954 19	Ø 266 mm			**91067200**	ø 228 x 42	in. dr. Ø 228 mm in. dr. Ø 9 "
1.2 VTi 82	01/13→	60 / 82										
1.4 VTi 95 LPG	08/12→	70 / 95	Bos		**2488301**	[–] 24883 18	Ø 283 mm			**91077200**	ø 203.2 x 39	in. dr. Ø 203 mm in. dr. Ø 8 "
				PRO	**92111503**	ø 266 x 22 x 34		Bos		**97010100**		in. dr. Ø 228 mm in. dr. Ø 9 "
				PRO	**92111603**	ø 283 x 26 x 34		Bos		**97031200**		in. dr. Ø 203 mm in. dr. Ø 8 "
					TPM0012					**84067200**	bore ø 20.6 ø 228 x 42	
		150900	Bos		**2395401**	[–] 23954 19	Orga 12771→ 2010-06-14→ Ø 266 mm	Luc		**2355402**	[–] 23554 17.2	⊕ rear disc brake
1.4 HDi 70	04/10→	50 / 68	Bos		**2488301**	[–] 24883 18	Orga 12271→ 14.06.2010→ Ø 283 mm	Luc	epad	**2355481**	[–] 23554 17.2	⊕ rear disc brake
				PRO	**92111503**	ø 266 x 22 x 34	Orga 12271→ 2010-06-14→			**91067200**	ø 228 x 42	Ø 9" mm Orga 12271→ 2010-06-14→ ⊕ rear drum brake
				PRO	**92111603**	ø 283 x 26 x 34	Orga 12271→ 2010-06-14→			**91077200**	ø 203.2 x 39	Ø 8" mm Orga 12271→ 2010-06-14→ ⊕ rear drum brake
					TPM0012					**84067200**	bore ø 20.6 ø 228 x 42	Ø 8" mm Orga 12271→ 2010-06-14→ ⊕ rear drum brake
									ABS	**92202100**	ø 249 x 9 x 69.2	⊕ rear disc brake
		151000	Bos		**2395401**	[–] 23954 19	→Orga 12270 →2010-06-13 Orga 12271→ 2010-06-14→ Ø 266 mm			**91067200**	ø 228 x 42	in. dr. Ø 228 mm in. dr. Ø 9 "
1.4 VTi 95	04/10→	70 / 95										
1.6 HDi 90	11/09→	68 / 92	Bos		**2488301**	[–] 24883 18	Orga 12271→ 2010-06-14→ Ø 283 mm			**91077200**	ø 203.2 x 39	in. dr. Ø 203 mm in. dr. Ø 8 "
				PRO	**92111503**	ø 266 x 22 x 34	→Orga 12270 →2010-06-13 Orga 12271→ 2010-06-14→	Bos		**97010100**		in. dr. Ø 228 mm in. dr. Ø 9 "
				PRO	**92111603**	ø 283 x 26 x 34	Orga 12271→ 2010-06-14→	Bos		**97031200**		in. dr. Ø 203 mm in. dr. Ø 8 "
					TPM0012					**84067200**	bore ø 20.6 ø 228 x 42	
			Bos							**84067201**	bore ø 20.6 ø 228 x 42	⊕ reinf.brake
		151100	Bos		**2395401**	[–] 23954 19	→Orga 12270 →2010-06-13 Orga 12271→ 2010-06-14→ Ø 266 mm			**91067200**	ø 228 x 42	in. dr. Ø 228 mm in. dr. Ø 9 "
1.4 VTi 98	11/09→	72 / 98	Bos		**2488301**	[–] 24883 18	Orga 12271→ 2010-06-14→ Ø 283 mm			**91077200**	ø 203.2 x 39	in. dr. Ø 203 mm in. dr. Ø 8 "
				PRO	**92111503**	ø 266 x 22 x 34	→Orga 12270 →2010-06-13 Orga 12271→ 2010-06-14→	Bos		**97010100**		in. dr. Ø 228 mm in. dr. Ø 9 "
				PRO	**92111603**	ø 283 x 26 x 34	Orga 12271→ 2010-06-14→	Bos		**97031200**		in. dr. Ø 203 mm in. dr. Ø 8 "
					TPM0012					**84067200**	bore ø 20.6 ø 228 x 42	
		151200	Bre		**2138104**	[–] 21381 14	Ø 323 mm	Luc		**2355402**	[–] 23554 17.2	⊕ rear disc brake
1.6	01/12→	120 / 163	Bos		**2395401**	[–] 23954 19	Ø 266 mm	Luc	epad	**2355481**	[–] 23554 17.2	⊕ rear disc brake
			Bos		**2488301**	[–] 24883 18	Ø 283 mm			**91067200**	ø 228 x 42	9" -brake ⊕ rear drum brake
										91077200	ø 203.2 x 39	8" -brake ⊕ rear drum brake
				PRO	**92111503**	ø 266 x 22 x 34		Bos		**97010100**		9" -brake ⊕ rear drum brake
				PRO	**92111603**	ø 283 x 26 x 34		Bos		**97031200**		8" -brake ⊕ rear drum brake
					TPM0012							
									ABS	**92202100**	ø 249 x 9 x 69.2	⊕ rear disc brake
		151300	Bre		**2138104**	[–] 21381 14	Ø 323 mm	Luc		**2355402**	[–] 23554 17.2	
1.6 HDi 100	07/14→	73 / 99	Bos		**2395401**	[–] 23954 19	Ø 266 mm	Luc	epad	**2355481**	[–] 23554 17.2	
			Bos		**2488301**	[–] 24883 18	Ø 283 mm					
									ABS	**92202100**	ø 249 x 9 x 69.2	
				PRO	**92111503**	ø 266 x 22 x 34						
				PRO	**92111603**	ø 283 x 26 x 34						
					TPM0012							

→

		kW / hp									
DS3 11/09→											
		151400	Bos		**2395401**	[–] 23954 19	Orga 12271→ 2010-06-14→ Ø 266 mm	Luc		**2355402**	[–] 23554 17.2
1.6 HDi 110	11/09→	82 / 112									
1.6 THP 150	01/10→	110 / 150	Bos		**2488301**	[–] 24883 18	→Orga 12270 →2010-06-13 Orga 12271→ 2010-06-14→ Ø 283 mm	Luc		**2355481**	[–] 23554 17.2
1.6 THP 155	04/10→	115 / 156									
1.6 VTi 120	04/10→	88 / 120									
				PRO	**92111503**	ø 266 x 22 x 34	Orga 12271→ 2010-06-14→		ABS	**92202100**	ø 249 x 9 x 69.2
				PRO	**92111603**	ø 283 x 26 x 34	→Orga 12270 →2010-06-13 Orga 12271→ 2010-06-14→				
					TPM0012						
		151500	Bos		**2395401**	[–] 23954 19	Ø 266 mm	Luc		**2355402**	[–] 23554 17.2
1.6 HDi 115	08/12→	84 / 114									
			Bos		**2488301**	[–] 24883 18	Ø 283 mm	Luc		**2355481**	[–] 23554 17.2
				PRO	**92111503**	ø 266 x 22 x 34			ABS	**92202100**	ø 249 x 9 x 69.2
				PRO	**92111603**	ø 283 x 26 x 34					
					TPM0012						
		151600	Bos		**2395401**	[–] 23954 19	Ø 266 mm	Luc		**2355402**	[–] 23554 17.2
1.6 HDi 115	10/13→	85 / 115									
1.6 HDi 120	10/13→	88 / 120	Bos		**2488301**	[–] 24883 18	Ø 283 mm	Luc		**2355481**	[–] 23554 17.2
				PRO	**92111503**	ø 266 x 22 x 34			ABS	**92202100**	ø 249 x 9 x 69.2
				PRO	**92111603**	ø 283 x 26 x 34				**TPM0012**	
					TPM0012						
		151700	Bre		**2138104**	[–] 21381 14		Luc		**2355402**	[–] 23554 17.2
1.6 Racing	02/11→	149 / 203									
1.6 Racing	02/11→	152 / 207			**TPM0012**			Luc		**2355481**	[–] 23554 17.2
									ABS	**92202100**	ø 249 x 9 x 69.2
DS3 Cabriolet 01/13→ → DS3 Convertible, Page 277											
DS3 Convertible 01/13→											
		151800	Bos		**2395401**	[–] 23954 19	Ø 266 mm			**91067200**	ø 228 x 42	in. dr. Ø 228 mm in. dr. Ø 9 "
1.2 VTi 82	01/13→	60 / 82									
1.6 HDi 90	01/13→	69 / 92	Bos		**2488301**	[–] 24883 18	Ø 283 mm			**91077200**	ø 203.2 x 39	in. dr. Ø 203 mm in. dr. Ø 8 "
				PRO	**92111503**	ø 266 x 22 x 34		Bos		**97010100**		in. dr. Ø 228 mm in. dr. Ø 9 "
				PRO	**92111603**	ø 283 x 26 x 34		Bos		**97031200**		in. dr. Ø 203 mm in. dr. Ø 8 "
					TPM0012					**84067200**	bore ø 20.6 ø 228 x 42	
		151900	Bre		**2138104**	[–] 21381 14	Ø 323 mm	Luc		**2355402**	[–] 23554 17.2
1.6 HDi 100	07/14→	73 / 99									
1.6 Racing	03/14→	149 / 203	Bos		**2395401**	[–] 23954 19	Ø 266 mm	Luc		**2355481**	[–] 23554 17.2
			Bos		**2488301**	[–] 24883 18	Ø 283 mm		ABS	**92202100**	ø 249 x 9 x 69.2
				PRO	**92111503**	ø 266 x 22 x 34					
				PRO	**92111603**	ø 283 x 26 x 34					
					TPM0012						
		152000	Bos		**2395401**	[–] 23954 19	Ø 266 mm	Luc		**2355402**	[–] 23554 17.2
1.6 HDi 120	07/14→	88 / 120									
1.6 THP 150	01/13→	110 / 150	Bos		**2488301**	[–] 24883 18	Ø 283 mm	Luc		**2355481**	[–] 23554 17.2
1.6 THP 155	01/13→	115 / 156									
1.6 VTi 120	01/13→	88 / 120									
				PRO	**92111503**	ø 266 x 22 x 34			ABS	**92202100**	ø 249 x 9 x 69.2
				PRO	**92111603**	ø 283 x 26 x 34					
					TPM0012						
DS4 04/11→											
		152100	Ate		**2455801**	[–] 24558 18		Luc		**2492201**	[–] 24922 17.3	
1.6	01/12→	121 / 165									
			Ate		**82032000**				ABS	**92168700**	ø 268 x 12 x 73.2	⊖ elect. handbr.
					92168500	ø 302 x 26 x 34.2			PRO	**92231303**	ø 290 x 12 x 35	⊕ elect. handbr. 19'' -brake

CITROËN

CITROËN

		kW / hp											
DS4 04/11→													
1.6	01/12→	152100 121 / 165		PRO 92168503	ø 302 x 26 x 34.2			Luc TPM0012				
				TPM0012								
1.6 HDi 110	04/11→	152200 81 / 110	Ate	2453801	[–] 24538 18.8			Luc 2355402	[–] 23554 17.2	⊖ elect. handbr.		
1.6 HDi 110	04/11→	82 / 112	Ate	82032000				Luc 2355481	[–] 23554 17.2	⊖ elect. handbr.		
1.6 VTi 120	04/11→	88 / 120	Ate	82062900				Luc 2492201	[–] 24922 17.3	⊕ elect. handbr.		
				PRO 92111503	ø 266 x 22 x 34			Luc 82037300		⊖ elect. handbr.		
				PRO 92111603	ø 283 x 26 x 34			Luc 82504400		⊕ elect. handbr.		
				TPM0012				ABS 92168700	ø 268 x 12 x 73.2	⊕ elect. handbr.		
								92194100	ø 249 x 9 x 73.2	⊖ elect. handbr.		
1.6 HDi 115	08/12→	152300 84 / 114	Ate	2453801	[–] 24538 18.8			Luc 2355402	[–] 23554 17.2	⊖ elect. handbr.		
			Ate	82032000				Luc 2355481	[–] 23554 17.2	⊖ elect. handbr.		
				PRO 92111603	ø 283 x 26 x 34			Luc 2492201	[–] 24922 17.3	⊕ elect. handbr.		
				TPM0012				ABS 92168700	ø 268 x 12 x 73.2	⊕ elect. handbr. except 19" -brake		
								92194100	ø 249 x 9 x 73.2	⊖ elect. handbr.		
								PRO 92231303	ø 290 x 12 x 35	⊕ elect. handbr. 19" -brake		
								TPM0012				
1.6 HDi 90	05/11→	152400 68 / 92	TRW	2522001	[–] 25220 18.5	⊖ elect. handbr.		Luc 2355402	[–] 23554 17.2	⊖ elect. handbr.		
			Ate	2453801	[–] 24538 18.8	⊕ elect. handbr.		Luc 2355481	[–] 23554 17.2	⊖ elect. handbr.		
			Ate	82032000		⊕ elect. handbr.		Luc 2492201	[–] 24922 17.3	⊕ elect. handbr.		
				PRO 92111503	ø 266 x 22 x 34	⊖ elect. handbr.		Luc 82037300		⊖ elect. handbr.		
				PRO 92111603	ø 283 x 26 x 34	⊕ elect. handbr.		Luc 82504400		⊕ elect. handbr.		
				TPM0012				ABS 92168700	ø 268 x 12 x 73.2	⊕ elect. handbr.		
								92194100	ø 249 x 9 x 73.2	⊖ elect. handbr.		
1.6 THP 150	04/11→	152500 110 / 150	Ate	2455801	[–] 24558 18	Ø 302 mm		Luc 2492201	[–] 24922 17.3	⊕ elect. handbr.		
			Ate	82032000		Ø 302 mm		ABS 92168700	ø 268 x 12 x 73.2	⊕ elect. handbr. except 19" -brake		
				92168500	ø 302 x 26 x 34.2			PRO 92231303	ø 290 x 12 x 35	⊕ elect. handbr. 19" -brake		
				PRO 92168503	ø 302 x 26 x 34.2			TPM0012				
				TPM0012								
1.6 THP 155	04/11→	152600 115 / 156	Ate	2455701	[–] 24557 19			Luc 2355402	[–] 23554 17.2	⊖ elect. handbr.		
1.6 THP 160	04/12→	120 / 163	Ate	82032000				Luc 2355481	[–] 23554 17.2	⊖ elect. handbr.		
2.0 HDi 165	04/11→	120 / 163	Ate	82062900				Luc 2492201	[–] 24922 17.3	⊕ elect. handbr.		
				92168500	ø 302 x 26 x 34.2			Luc 82037300		⊖ elect. handbr.		
				PRO 92168503	ø 302 x 26 x 34.2			Luc 82504400		⊕ elect. handbr.		
				TPM0012				ABS 92168700	ø 268 x 12 x 73.2	⊕ elect. handbr.		
								92194100	ø 249 x 9 x 73.2	⊖ elect. handbr.		
1.6 THP 200	04/11→	152700 147 / 200	Ate	2506901	[+] 25069 17			Luc 2355402	[–] 23554 17.2			
			Ate	82062900				Luc 2355481	[–] 23554 17.2			
			Ate	82517900				Luc 82037300				
				PRO 92256903	ø 340 x 30 x 34.3			92194100	ø 249 x 9 x 73.2			
				TPM0012								

→

	30 kW / hp										
DS4 04/11→											
2.0 HDi 135	09/11→	152800 100 / 136	Ate	2455801	[–] 24558 18	except 19" -brake	Luc	2492201	[–] 24922 17.3	⊕ elect. handbr.
			Ate	2507001	[o] 25070 17	19" -brake		92168700	ø 268 x 12 x 73.2	⊕ elect. handbr. except 19" -brake
			Ate	82032000		except 19" -brake		92231303	ø 290 x 12 x 35	⊕ elect. handbr. 19" -brake
			Ate	82517900		19" -brake		TPM0012		
				92168500	ø 302 x 26 x 34.2	except 19" -brake				
				92168503	ø 302 x 26 x 34.2	except 19" -brake				
				92256903	ø 340 x 30 x 34.3	19" -brake				
				TPM0012						
DS5 11/11→										
1.6	01/12→	152900 121 / 165	Ate	2455801	[–] 24558 18	Ø 302 mm	Luc	2492201	[–] 24922 17.3	
			Ate	2507001	[o] 25070 17	Ø 340 mm		92168700	ø 268 x 12 x 73.2	
			Ate	82032000		Ø 302 mm		92231303	ø 290 x 12 x 35	
			Ate	82517900		Ø 340 mm		TPM0012		
				92168500	ø 302 x 26 x 34.2					
				92168503	ø 302 x 26 x 34.2					
				92256903	ø 340 x 30 x 34.3					
				TPM0012						
1.6 HDi	11/13→	153000 85 / 115	Ate	2453801	[–] 24538 18.8	Ø 283 mm	Luc	2492201	[–] 24922 17.3	
			Ate	2507001	[o] 25070 17	Ø 340 mm		92168700	ø 268 x 12 x 73.2	
			Ate	82032000		Ø 283 mm		92231303	ø 290 x 12 x 35	
			Ate	82517900		Ø 340 mm		TPM0012		Ø 290 mm
				92111603	ø 283 x 26 x 34					
				92256903	ø 340 x 30 x 34.3					
				TPM0012						
1.6 HDi 110 1.6 THP 155 1.6 THP 200 2.0 HDi 165	11/11→ 11/11→ 11/11→ 11/11→	153100 82 / 112 115 / 156 147 / 200 120 / 163	Ate	2455801	[–] 24558 18	Ø 302 mm	Luc	2492201	[–] 24922 17.3	
			Ate	2506901	[+] 25069 17	Ø 340 mm	Luc	82504400		
			Ate	82032000		Ø 304 mm		92168700	ø 268 x 12 x 73.2	
			Ate	82062900						
			Ate	82517900		Ø 340 mm				
				92168500	ø 302 x 26 x 34.2					
				92168503	ø 302 x 26 x 34.2					
				92256903	ø 340 x 30 x 34.3					
				TPM0012						
1.6 HDi 115	06/12→	153200 84 / 114	Ate	2455801	[–] 24558 18	Ø 302 mm →Orga 13341	Luc	2492201	[–] 24922 17.3	Ø 268 mm
			Ate	2453801	[–] 24538 18.8	Ø 283 mm Orga 13342→		92168700	ø 268 x 12 x 73.2	
			Ate	2507001	[o] 25070 17	Ø 340 mm				
			Ate	82032000		Ø 283 mm				
			Ate	82517900		Ø 340 mm				
				92168500	ø 302 x 26 x 34.2	→Orga 13341				
				92111603	ø 283 x 26 x 34	Orga 13342→				

CITROËN

CITROËN

		kW / hp										
DS5 11/11→												
153200												
1.6 HDi 115	06/12→	84 / 114		PRO 92168503	ø 302 x 26 x 34.2	→Orga 13341						
				PRO 92256903	ø 340 x 30 x 34.3	Ø 340 mm 83 mm hub-Ø						
				TPM0012								
153300			Ate	2453801	[–] 24538 18.8	Ø 283 mm	Luc		2492201	[–] 24922 17.3		
1.6 HDi 120	07/14→	88 / 120	Ate	2507001	[o] 25070 17	Ø 340 mm		ABS	92168700	ø 268 x 12 x 73.2		
			Ate	82032000		Ø 283 mm						
			Ate	82517900		Ø 340 mm						
				PRO 92111603	ø 283 x 26 x 34							
				PRO 92256903	ø 340 x 30 x 34.3							
				TPM0012		Ø 283 mm						
153400			Ate	2455801	[–] 24558 18	Ø 302 mm	Luc		2492201	[–] 24922 17.3	Ø 268 mm	
1.6 THP 150	11/11→	110 / 150	Ate	2507001	[o] 25070 17	Ø 340 mm		ABS	92168700	ø 268 x 12 x 73.2		
2.0 HDi 135	11/11→	100 / 136	Ate	82032000		Ø 302 mm						
			Ate	82517900		Ø 340 mm						
				92168500	ø 302 x 26 x 34.2	82 mm hub-Ø						
				PRO 92168503	ø 302 x 26 x 34.2	82 mm hub-Ø						
				PRO 92256903	ø 340 x 30 x 34.3	Ø 340 mm 83 mm hub-Ø						
				TPM0012								
153500			Ate	2455801	[–] 24558 18	Ø 302 mm	Luc		2492201	[–] 24922 17.3		
1.6 THP 165 Hybrid	06/12→	121 / 165	Ate	2507001	[o] 25070 17	Ø 340 mm		PRO	92231303	ø 290 x 12 x 35		
			Ate	82032000		Ø 302 mm			TPM0012			
			Ate	82517900		Ø 340 mm						
				92168500	ø 302 x 26 x 34.2							
				PRO 92168503	ø 302 x 26 x 34.2							
				PRO 92256903	ø 340 x 30 x 34.3							
				TPM0012								
153600			Ate	2455801	[–] 24558 18	Ø 302 mm	Luc		2492201	[–] 24922 17.3	Ø 290 mm	
2.0 HDi 135 Hybrid4 4x4	12/11→	100 / 136	Ate	2507001	[o] 25070 17	Ø 340 mm		PRO	92231303	ø 290 x 12 x 35		
			Ate	82032000		Ø 302 mm			TPM0012			
			Ate	82517900		Ø 340 mm						
				92168500	ø 302 x 26 x 34.2	82 mm hub-Ø						
				PRO 92168503	ø 302 x 26 x 34.2	82 mm hub-Ø						
				PRO 92256903	ø 340 x 30 x 34.3	Ø 340 mm						
				TPM0012								
153700			Ate	2455801	[–] 24558 18	Ø 302 mm	Luc		2492201	[–] 24922 17.3		
2.0 HDi 165 Hybrid4 4x4	12/11→	120 / 163	Ate	2506901	[+] 25069 17	Ø 340 mm	Luc		82504400			
			Ate	82032000		Ø 304 mm		PRO	92231303	ø 290 x 12 x 35		
			Ate	82062900								
			Ate	82517900		Ø 340 mm						
				92168500	ø 302 x 26 x 34.2							

→

		kW / hp										
DS5 11/11→												
153700												
2.0 HDi 165 Hybrid4 4x4	12/11→	120 / 163		PRO	92168503	ø 302 x 26 x 34.2						
				PRO	92256903	ø 340 x 30 x 34.3						
					TPM0012							
153800			Ate		2455801	[–] 24558 18	Ø 302 mm	Luc		2492201	[–] 24922 17.3	
2.0 HDi 180	08/13→	133 / 180	Ate		2507001	[o] 25070 17	Ø 340 mm		PRO	92231303	ø 290 x 12 x 35	
			Ate		82032000		Ø 302 mm			TPM0012		
			Ate		82517900		Ø 340 mm					
					92168500	ø 302 x 26 x 34.2						
				PRO	92168503	ø 302 x 26 x 34.2						
				PRO	92256903	ø 340 x 30 x 34.3	Ø 340 mm					
					TPM0012							
EVASION (22, U6) 06/94→07/02												
153900			Ben		2304201	[+] 23042 19		Ate		2127501	[+] 21275 16.9	⊕ rear disc brake
1.8	05/97→07/02	73 / 99	Ben		82030200			Ate		82030900		⊕ rear disc brake
			Luc		82055400		2x	Ate		82062900		
					92088000	ø 257 x 20 x 40.5		Ben		91047800	ø 255 x 61	⊕ rear drum brake
								Ben		97009600		⊕ rear drum brake
								Ben		84047800	bore ø 19 ø 255 x 61	⊕ rear drum brake
										92074100	ø 295 x 10 x 56	⊕ rear disc brake
										94015000	ø 255,0 x 67	⊕ rear drum brake
								Ate		91054700	ø 180 x 31	⊕ rear disc brake
										97012500		
154000			Gir		2180101	[+] 21801 19.3		Ate		2127501	[+] 21275 16.9	⊕ rear disc brake
1.9 TD	11/94→07/02	66 / 90										
2.0	06/94→07/02	89 / 121	Luc		82055400		2x	Ate		82030900		⊕ rear disc brake
2.0 16V	05/98→04/00	97 / 132										
2.0 16V	05/00→07/02	100 / 136										
2.0 HDI	08/99→07/02	80 / 109	Luc		82063300			Ate		82062900		
2.0 HDI 16V	09/99→07/02	80 / 109										
2.0 Turbo C.T.	06/94→07/02	108 / 147										
2.1 TD	05/96→07/02	80 / 109		PRO	92074003	ø 281 x 26 x 43.5		Ben		91047800	ø 255 x 61	⊕ rear drum brake
								Ben		97009600		⊕ rear drum brake
								Ben		84047800	bore ø 19 ø 255 x 61	⊕ rear drum brake
										92074100	ø 295 x 10 x 56	⊕ rear disc brake
										94015000	ø 255,0 x 67	⊕ rear drum brake
								Ate		91054700	ø 180 x 31	⊕ rear disc brake
										97012500		
JUMPER Box (230L) 02/94→04/02												
154100			Luc		2179701	[+] 21797 19.7	⊕ 27 + 31 ⊕ round plug ⊕ 1000 kg payload 1400 kg payload →16206253	Bre		2392101	[–] 23921 20.1	16194400→ ⊕ rear disc brake
1.9 D	02/94→04/02	51 / 69										
1.9 D	07/99→04/02	50 / 68								82061700		16194400→ ⊕ rear disc brake
1.9 TD	03/94→04/02	66 / 90	Luc		2179901	[+] 21799 19.7	⊕ 35 ⊕ 1800 kg payload ⊕ round plug →16205352					
1.9 TD	03/94→04/02	68 / 92						Bre		82505900		2x
2.0	03/94→04/02	80 / 109	Luc		2360201	[+] 23602 19.7	⊕ 27 + 31 ⊕ 1000 kg payload 1400 kg payload ⊕ flat plug →16206253	Luc		91047900	ø 254 x 57	⊕ rear drum brake ⊕ 27 + 31 ⊕ 1000 kg payload 1400 kg payload →16206253
2.0 4x4	10/96→01/02	80 / 109										
2.5 D	03/94→04/02	63 / 86										
2.5 D 4x4	03/00→04/02	63 / 86										
2.5 TD	03/94→04/02	76 / 103	Luc		2360301	[+] 23603 19.7	⊕ 35 ⊕ 1800 kg payload ⊕ flat plug →16205352	Luc		91049600	ø 254 x 57	⊕ rear drum brake ⊕ 35 ⊕ 1800 kg payload →16209999
2.8 D	01/99→02/02	64 / 87										
2.8 HDi	09/00→04/02	94 / 128	Bre		2391701	[+] 23917 19.1	⊕ 27 + 31 payl.1000 kg→ →payl.1400 kg 16204256→	Lkh		91060900	ø 254 x 57	⊕ rear drum brake ⊕ 27 + 31 payl.1000 kg→ →payl.1400 kg 16204256→
2.8 HDi 4x4	09/00→04/02	94 / 128										
			Bre		2391901	[+] 23919 19.1	⊕ 35 ⊕ 1800 kg payload 16194400→					
			Bre		82505900		2x	Luc		97010300		Lucas

CITROËN

CITROËN

JUMPER Box (230L) 02/94→04/02

		154100												
1.9 D	02/94→04/02	51 / 69	Luc		82063300		→08/01				97031300		Lockheed
1.9 D	07/99→04/02	50 / 68		PRO	92073703	ø 280 x 18 x 65.5	⊕ 27 + 31 ⊕ 1000 kg payload 1400 kg payload →16206253	Luc		84049600	bore ø 28.6 ø 254 x 57	⊕ rear drum brake ⊕ 35 ⊕ 1800 kg payload →16209999
1.9 TD	03/94→04/02	66 / 90										
1.9 TD	03/94→04/02	68 / 92										
2.0	03/94→04/02	80 / 109		PRO	92116603	ø 280 x 24 x 65.5	⊕ 27 + 31 payl.1000 kg→ →payl.1400 kg			92116100	ø 280 x 16 x 82	⊕ rear disc brake 16194400→ ⊕ 27 + 31 payl.1000 kg→ →payl.1400 kg
2.0 4x4	10/96→01/02	80 / 109										
2.5 D	03/94→04/02	63 / 86		PRO	92116703	ø 300 x 24 x 65.5	⊕ 35 ⊕ 1800 kg payload		PRO	92116203	ø 280 x 16 x 82	⊕ rear disc brake 16194400→ ⊕ 35 ⊕ 1800 kg payload
2.5 D 4x4	03/00→04/02	63 / 86										
2.5 TD	03/94→04/02	76 / 103								94010200	ø 254,0 x 63.5	⊕ rear drum brake ⊕ 27 + 31 payl.1000 kg→ →payl.1400 kg
2.8 D	01/99→02/02	64 / 87										
2.8 HDi	09/00→04/02	94 / 128								94014600	ø 254,0 x 64.5	⊕ rear drum brake ⊕ 35 ⊕ 1800 kg payload →16209999
2.8 HDi 4x4	09/00→04/02	94 / 128										
										91062100	ø 172 x 42	
										97035300		
		154200										
2.0 HDI	11/01→04/02	62 / 84	Luc		2179701	[+] 21797 19.7	⊕ 27 + 31 ⊕ round plug ⊕ 1000 kg payload 1400 kg payload →16206253	Bre		2392101	[–] 23921 20.1	16194400→ ⊕ rear disc brake
			Luc		2179901	[+] 21799 19.7	⊕ 35 ⊕ 1800 kg payload ⊕ round plug →16205352			82061700		16194400→ ⊕ rear disc brake
			Luc		2360201	[+] 23602 19.7	⊕ 27 + 31 ⊕ 1000 kg payload 1400 kg payload ⊕ flat plug →16206253	Bre		82505900		2x
			Luc		2360301	[+] 23603 19.7	⊕ 35 ⊕ 1800 kg payload ⊕ flat plug →16205352	Luc		91047900	ø 254 x 57	⊕ rear drum brake ⊕ 27 + 31 ⊕ 1000 kg payload 1400 kg payload →16206253
			Bre		2391701	[+] 23917 19.1	⊕ 27 + 31 payl.1000 kg→ →payl.1400 kg 16204256→	Luc		91049600	ø 254 x 57	⊕ rear drum brake ⊕ 35 ⊕ 1800 kg payload →16209999
			Bre		2391901	[+] 23919 19.1	⊕ 35 ⊕ 1800 kg payload 16194400→	Lkh		91060900	ø 254 x 57	⊕ rear drum brake ⊕ 27 + 31 payl.1000 kg→ →payl.1400 kg 16204256→
			Bre		82505900		2x	Luc		97010300		Lucas
				PRO	92073703	ø 280 x 18 x 65.5	⊕ 27 + 31 ⊕ 1000 kg payload 1400 kg payload →16206253			97031300		Lockheed
				PRO	92116603	ø 280 x 24 x 65.5	⊕ 27 + 31 payl.1000 kg→ →payl.1400 kg	Luc		84049600	bore ø 28.6 ø 254 x 57	⊕ rear drum brake ⊕ 35 ⊕ 1800 kg payload →16209999
				PRO	92116703	ø 300 x 24 x 65.5	⊕ 35 ⊕ 1800 kg payload			92116100	ø 280 x 16 x 82	⊕ rear disc brake 16194400→ ⊕ 27 + 31 payl.1000 kg→ →payl.1400 kg
									PRO	92116203	ø 280 x 16 x 82	⊕ rear disc brake 16194400→ ⊕ 35 ⊕ 1800 kg payload
										94010200	ø 254,0 x 63.5	⊕ rear drum brake ⊕ 27 + 31 payl.1000 kg→ →payl.1400 kg
										94014600	ø 254,0 x 64.5	⊕ rear drum brake ⊕ 35 ⊕ 1800 kg payload →16209999
										91062100	ø 172 x 42	
										97035300		
		154300										
2.5 TDi	12/96→11/00	79 / 107	Luc		2179701	[+] 21797 19.7	⊕ 27 + 31 ⊕ round plug ⊕ 1000 kg payload 1400 kg payload →16206253	Bre		2392101	[–] 23921 20.1	16194400→ ⊕ rear disc brake
2.5 TDi 4x4	03/00→11/00	79 / 107										
			Luc		2179901	[+] 21799 19.7	⊕ 35 ⊕ 1800 kg payload ⊕ round plug →16205352			82061700		16194400→ ⊕ rear disc brake
			Luc		2360201	[+] 23602 19.7	⊕ 27 + 31 ⊕ 1000 kg payload 1400 kg payload ⊕ flat plug →16206253	Bre		82505900		2x
			Luc		2360301	[+] 23603 19.7	⊕ 35 ⊕ 1800 kg payload ⊕ flat plug →16205352	Luc		91047900	ø 254 x 57	⊕ rear drum brake ⊕ 27 + 31 ⊕ 1000 kg payload 1400 kg payload →16206253
			Bre		2391701	[+] 23917 19.1	⊕ 27 + 31 payl.1000 kg→ →payl.1400 kg 16204256→	Luc		91049600	ø 254 x 57	⊕ rear drum brake ⊕ 35 ⊕ 1800 kg payload →16209999
			Bre		2391901	[+] 23919 19.1	⊕ 35 ⊕ 1800 kg payload 16194400→	Lkh		91060900	ø 254 x 57	⊕ rear drum brake ⊕ 27 + 31 payl.1000 kg→ →payl.1400 kg 16204256→
			Bre		82505900		2x	Luc		97010300		Lucas
			Luc		82063300					97031300		Lockheed
				PRO	92073703	ø 280 x 18 x 65.5	⊕ 27 + 31 ⊕ 1000 kg payload 1400 kg payload →16206253	Luc		84049600	bore ø 28.6 ø 254 x 57	⊕ rear drum brake ⊕ 35 ⊕ 1800 kg payload →16209999
				PRO	92116603	ø 280 x 24 x 65.5	⊕ 27 + 31 payl.1000 kg→ →payl.1400 kg			92116100	ø 280 x 16 x 82	⊕ rear disc brake 16194400→ ⊕ 27 + 31 payl.1000 kg→ →payl.1400 kg
				PRO	92116703	ø 300 x 24 x 65.5	⊕ 35 ⊕ 1800 kg payload		PRO	92116203	ø 280 x 16 x 82	⊕ rear disc brake 16194400→ ⊕ 35 ⊕ 1800 kg payload
										94010200	ø 254,0 x 63.5	⊕ rear drum brake ⊕ 27 + 31 payl.1000 kg→ →payl.1400 kg
										94014600	ø 254,0 x 64.5	⊕ rear drum brake ⊕ 35 ⊕ 1800 kg payload →16209999
										91062100	ø 172 x 42	
										97035300		

JUMPER Box (244) 04/02→

		kW / hp											
		154400	Bre		2391701	[+] 23917 19.1	⊕ 29 + 33 payl.1000 kg→ →payl.1400 kg	Bre		2392101	[–] 23921 20.1	⊕ rear disc brake
2.0	04/02→	81 / 110										
2.0 bivalent	02/03→	81 / 110	Bre		2391901	[+] 23919 19.1	⊕ 35 ⊕ 1800 kg payload			82061700		⊕ rear disc brake
2.0 HDi	04/02→	62 / 84										
2.2 HDi	04/02→	74 / 101	Bre		82505900			Lkh		91060900	ø 254 x 57	⊕ rear drum brake payl.1000 kg→ →payl.1400 kg
2.3 HDi	08/08→	95 / 129										
2.8 HDi	04/02→	94 / 128		PRO	92116603	ø 280 x 24 x 65.5	⊕ 29 + 33 payl.1000 kg→ →payl.1400 kg			97031300		⊕ rear drum brake
2.8 HDi	06/03→06/06	77 / 105										
2.8 HDi	05/04→	107 / 146		PRO	92116703	ø 300 x 24 x 65.5	⊕ 35 ⊕ 1800 kg payload	Lkh		84060900	bore ø 27 ø 254 x 57	⊕ rear drum brake payl.1000 kg→ →payl.1400 kg
2.8 HDi 4x4	04/02→	94 / 128										
										92116100	ø 280 x 16 x 82	⊕ 29 + 33 payl.1000 kg→ →payl.1400 kg
									PRO	92116203	ø 280 x 16 x 82	⊕ 35 ⊕ 1800 kg payload
										94010200	ø 254,0 x 63.5	⊕ rear drum brake payl.1000 kg→ →payl.1400 kg
										91064800	ø 172 x 42	
										97035300		

JUMPER Box 04/06→

		154500	Bre		2446601	[+] 24466 19	⊕ 2000 kg payload ⊕ incr. payload	Bos		2446501	[–] 24465 18.8	
2.2 HDi 100	04/06→	74 / 101										
2.2 HDi 110	07/11→	81 / 110	Bre		2446602	[+] 24466 19	⊕ 1600 kg payload ⊕ incr. payload	Bos		82054200		
2.2 HDi 120	04/06→	88 / 120										
2.2 HDi 130	07/11→	96 / 130	Bre		2446701	[+] 24467 19	⊕ incr. payload ⊕ 2000 kg payload			92157400	ø 280 x 16 x 82	payl.1100 kg→ →payl.1500 kg ⊕ 1700 kg payload ⊖ incr. payload
2.2 HDi 150	07/11→	110 / 150										
2.3 HDi	10/09→	93 / 127	Bre		2446703	[+] 24467 19	⊕ incr. payload ⊕ 1600 kg payload			92157500	ø 280 x 16 x 80	⊕ 1700 kg payload ⊕ incr. payload
3.0 HDi 145	07/10→	107 / 146										
3.0 HDi 155	07/10→	115 / 156	Bre		2446801	[+] 24468 19	payl.1200 kg→ →payl.1400 kg ⊖ incr. payload			92157600	ø 300 x 16 x 80	⊕ 2000 kg payload
3.0 HDi 160	09/06→	116 / 157										
3.0 HDi 180	07/11→	130 / 177	Bre		2446802	[+] 24468 19	⊕ 1600 kg payload ⊖ incr. payload			91066700	ø 172 x 42	
			Bre		2446901	[+] 24469 19	⊖ incr. payload ⊕ 1200 kg payload 1400 kg payload			97035900		
			Bre		2446902	[+] 24469 19	⊖ incr. payload ⊕ 1600 kg payload					
			Bre		82073400		⊕ 1100 kg payload 1500 kg payload					
			Bre		82073700		⊕ 1700 kg payload ⊖ incr. payload					
			Bre		82075800		⊕ 1700 kg payload ⊕ incr. payload					
			Bre		82075900		⊕ 2000 kg payload					
					92157200	ø 280 x 28 x 69.5	⊕ 1700 kg payload ⊖ incr. payload					
					92157300	ø 300 x 32 x 73.5	⊕ 2000 kg payload					
				PRO	92116603	ø 280 x 24 x 65.5	payl.1100 kg→ →payl.1500 kg					
				PRO	92116703	ø 300 x 24 x 65.5	⊕ 1700 kg payload ⊕ incr. payload					
		154600	Bre		2446601	[+] 24466 19	payl.1600 kg→ →payl.2000 kg ⊕ incr. payload	Bos		2446501	[–] 24465 18.8	
2.3 HDi 135	08/08→	95 / 129										
			Bre		2446602	[+] 24466 19	payl.1600 kg→ →payl.2000 kg ⊕ incr. payload			92157400	ø 280 x 16 x 82	payl.980 kg→ →payl.1600 kg ⊕ decr. payload ⊕ steel rim
			Bre		2446701	[+] 24467 19	⊕ Mid-life ⊕ incr. payload ⊕ 2000 kg payload			92157500	ø 280 x 16 x 80	⊕ 1600 kg payload ⊕ incr. payload ⊕ steel rim
			Bre		2446703	[+] 24467 19	⊕ Mid-life ⊕ incr. payload ⊕ 1600 kg payload			92157600	ø 300 x 16 x 80	⊕ 2000 kg payload ⊕ incr. payload ⊕ steel rim
			Bre		2446801	[+] 24468 19	payl.980 kg→ →payl.1600 kg ⊕ decr. payload					
			Bre		2446802	[+] 24468 19	payl.980 kg→ →payl.1600 kg ⊕ decr. payload					
			Bre		2446901	[+] 24469 19	⊕ Mid-life ⊖ incr. payload ⊕ 1200 kg payload 1400 kg payload					
			Bre		2446902	[+] 24469 19	⊕ Mid-life ⊖ incr. payload ⊕ 1600 kg payload					
					92157200	ø 280 x 28 x 69.5	⊕ 1600 kg payload ⊕ decr. payload ⊕ steel rim					
					92157300	ø 300 x 32 x 73.5	⊕ 2000 kg payload ⊕ incr. payload ⊕ steel rim					
				PRO	92116603	ø 280 x 24 x 65.5	payl.980 kg→ →payl.1400 kg ⊕ steel rim					
				PRO	92116703	ø 300 x 24 x 65.5	⊕ 1600 kg payload ⊕ incr. payload ⊕ steel rim					

CITROËN

CITROËN

JUMPER Bus (230P) 02/94→04/02

		kW / hp												
		154700	Luc		2179701	[+] 21797	19.7	⊕ 27 + 31 ⊕ round plug ⊕ 1000 kg payload 1400 kg payload →16206253	Bre		2392101	[–] 23921	20.1	16194400→ ⊕ rear disc brake
1.9 D	01/99→04/02	51 / 69												
1.9 TD	02/94→04/02	68 / 92									82061700			16194400→ ⊕ rear disc brake
1.9 TD	08/94→04/02	66 / 90	Luc		2179901	[+] 21799	19.7	⊕ 35 ⊕ 1800 kg payload ⊕ round plug →16205352						
1.9 TD 4x4	08/96→04/02	68 / 92							Bre		82505900			2x
2.0	02/94→04/02	80 / 109	Luc		2360201	[+] 23602	19.7	⊕ 27 + 31 ⊕ 1000 kg payload 1400 kg payload ⊕ flat plug →16206253						
2.0 4x4	08/96→04/02	80 / 109							Luc		91047900	ø 254 x 57		⊕ rear drum brake ⊕ 27 + 31 ⊕ 1000 kg payload 1400 kg payload →16206253
2.5 D	08/94→04/02	63 / 86												
2.5 D 4x4	08/96→04/02	63 / 86							Luc		91049600	ø 254 x 57		⊕ rear drum brake ⊕ 35 ⊕ 1800 kg payload →16209999
2.5 TD	08/94→04/02	76 / 103	Luc		2360301	[+] 23603	19.7	⊕ 35 ⊕ 1800 kg payload ⊕ flat plug →16205352						
2.5 TD 4x4	08/96→04/02	76 / 103							Lkh		91060900	ø 254 x 57		⊕ rear drum brake ⊕ 27 + 31 payl.1000 kg→ →payl.1400 kg 16204256→
2.8 D	01/99→02/02	64 / 87												
2.8 HDi	09/00→04/02	94 / 128	Bre		2391701	[+] 23917	19.1	⊕ 27 + 31 payl.1000 kg→ →payl.1400 kg 16204256→						
2.8 HDi 4x4	09/00→04/02	94 / 128												
			Bre		2391901	[+] 23919	19.1	⊕ 35 ⊕ 1800 kg payload 16194400→						
			Bre		82505900			2x	Luc		97010300			Lucas
			Luc		82063300			→08/01			97031300			Lockheed
				PRO	92073703	ø 280 x 18 x 65.5		⊕ 27 + 31 ⊕ 1000 kg payload 1400 kg payload →16206253	Luc		84049600	bore ø 28.6 ø 254 x 57		⊕ rear drum brake ⊕ 35 ⊕ 1800 kg payload →16209999
				PRO	92116603	ø 280 x 24 x 65.5		⊕ 27 + 31 payl.1000 kg→ →payl.1400 kg			92116100	ø 280 x 16 x 82		⊕ rear disc brake 16194400→ ⊕ 27 + 31 payl.1000 kg→ →payl.1400 kg
				PRO	92116703	ø 300 x 24 x 65.5		⊕ 35 ⊕ 1800 kg payload		PRO	92116203	ø 280 x 16 x 82		⊕ rear disc brake 16194400→ ⊕ 35 ⊕ 1800 kg payload
											94010200	ø 254,0 x 63.5		⊕ rear drum brake ⊕ 27 + 31 payl.1000 kg→ →payl.1400 kg
											94014600	ø 254,0 x 64.5		⊕ rear drum brake ⊕ 35 ⊕ 1800 kg payload →16209999
											91062100	ø 172 x 42		
											97035300			
		154800	Luc		2179701	[+] 21797	19.7	⊕ 27 + 31 ⊕ round plug ⊕ 1000 kg payload 1400 kg payload →16206253	Bre		2392101	[–] 23921	20.1	16194400→ ⊕ rear disc brake
2.5 TDi	12/96→11/00	79 / 107												
2.5 TDI 4x4	12/96→11/00	79 / 107									82061700			16194400→ ⊕ rear disc brake
			Luc		2179901	[+] 21799	19.7	⊕ 35 ⊕ 1800 kg payload ⊕ round plug →16205352						
									Bre		82505900			2x
			Luc		2360201	[+] 23602	19.7	⊕ 27 + 31 ⊕ 1000 kg payload 1400 kg payload ⊕ flat plug →16206253						
									Luc		91047900	ø 254 x 57		⊕ rear drum brake ⊕ 27 + 31 ⊕ 1000 kg payload 1400 kg payload →16206253
			Luc		2360301	[+] 23603	19.7	⊕ 35 ⊕ 1800 kg payload ⊕ flat plug →16205352						
									Luc		91049600	ø 254 x 57		⊕ rear drum brake ⊕ 35 ⊕ 1800 kg payload →16209999
			Bre		2391701	[+] 23917	19.1	⊕ 27 + 31 payl.1000 kg→ →payl.1400 kg 16204256→						
									Lkh		91060900	ø 254 x 57		⊕ rear drum brake ⊕ 27 + 31 payl.1000 kg→ →payl.1400 kg 16204256→
			Bre		2391901	[+] 23919	19.1	⊕ 35 ⊕ 1800 kg payload 16194400→						
			Bre		82505900			2x	Luc		97010300			Lucas
			Luc		82063300						97031300			Lockheed
				PRO	92073703	ø 280 x 18 x 65.5		⊕ 27 + 31 ⊕ 1000 kg payload 1400 kg payload →16206253	Luc		84049600	bore ø 28.6 ø 254 x 57		⊕ rear drum brake ⊕ 35 ⊕ 1800 kg payload →16209999
				PRO	92116603	ø 280 x 24 x 65.5		⊕ 27 + 31 payl.1000 kg→ →payl.1400 kg			92116100	ø 280 x 16 x 82		⊕ rear disc brake 16194400→ ⊕ 27 + 31 payl.1000 kg→ →payl.1400 kg
				PRO	92116703	ø 300 x 24 x 65.5		⊕ 35 ⊕ 1800 kg payload		PRO	92116203	ø 280 x 16 x 82		⊕ rear disc brake 16194400→ ⊕ 35 ⊕ 1800 kg payload
											94010200	ø 254,0 x 63.5		⊕ rear drum brake ⊕ 27 + 31 payl.1000 kg→ →payl.1400 kg
											94014600	ø 254,0 x 64.5		⊕ rear drum brake ⊕ 35 ⊕ 1800 kg payload →16209999
											91062100	ø 172 x 42		
											97035300			

JUMPER Bus (244, Z_) 04/02→

		154900	Bre		2391701	[+] 23917	19.1	⊕ 29 + 33 payl.1000 kg→ →payl.1400 kg	Bre		2392101	[–] 23921	20.1	⊕ rear disc brake
2.0	04/02→	81 / 110												
2.0 bivalent	02/03→	81 / 110	Bre		2391901	[+] 23919	19.1	⊕ 35 ⊕ 1800 kg payload			82061700			⊕ rear disc brake
2.0 HDi	04/02→	62 / 84												
2.2 HDi	04/02→	74 / 101												
2.3 HDi	08/08→	93 / 126	Bre		82505900				Lkh		91060900	ø 254 x 57		⊕ rear drum brake payl.1000 kg→ →payl.1400 kg
2.8 HDi	04/02→	94 / 128												
2.8 HDi	06/03→06/06	77 / 105												
2.8 HDi All-wheel Drive	04/02→	94 / 128		PRO	92116603	ø 280 x 24 x 65.5		⊕ 29 + 33 payl.1000 kg→ →payl.1400 kg			97031300			⊕ rear drum brake
				PRO	92116703	ø 300 x 24 x 65.5		⊕ 35 ⊕ 1800 kg payload	Lkh		84060900	bore ø 27 ø 254 x 57		⊕ rear drum brake payl.1000 kg→ →payl.1400 kg
											92116100	ø 280 x 16 x 82		⊕ 29 + 33 payl.1000 kg→ →payl.1400 kg
										PRO	92116203	ø 280 x 16 x 82		⊕ 35 ⊕ 1800 kg payload

→

		kW / hp										
JUMPER Bus (244, Z_) 04/02→												
		154900										
2.0	04/02→	81 / 110								94010200	ø 254,0 x 63.5	⊕ rear drum brake payl.1000 kg→ →payl.1400 kg
2.0 bivalent	02/03→	81 / 110								91064800	ø 172 x 42	
2.0 HDi	04/02→	62 / 84								97035300		
2.2 HDi	04/02→	74 / 101										
2.3 HDi	08/08→	93 / 126										
2.8 HDi	04/02→	94 / 128										
2.8 HDi	06/03→06/06	77 / 105										
2.8 HDi All-wheel Drive	04/02→	94 / 128										
JUMPER Bus 04/06→												
		155000	Bre		2446601	[+] 24466 19	⊕ 2000 kg payload ⊕ incr. payload	Bos		2446501	[–] 24465 18.8	
2.2 HDi 100	04/06→	74 / 101	Bre		2446602	[+] 24466 19	⊕ 1600 kg payload ⊕ incr. payload	Bos		82054200		
			Bre		2446701	[+] 24467 19	⊕ incr. payload ⊕ 2000 kg payload			92157400	ø 280 x 16 x 82	payl.1100 kg→ →payl.1500 kg ⊕ 1700 kg payload ⊖ incr. payload
			Bre		2446703	[+] 24467 19	⊕ incr. payload ⊕ 1600 kg payload			92157500	ø 280 x 16 x 80	⊕ 1700 kg payload ⊕ incr. payload
			Bre		2446801	[+] 24468 19	⊕ 1200 kg payload 1400 kg payload ⊖ incr. payload			92157600	ø 300 x 16 x 80	⊕ 2000 kg payload
			Bre		2446802	[+] 24468 19	⊕ 1600 kg payload ⊖ incr. payload			91066700	ø 172 x 42	
			Bre		2446901	[+] 24469 19	⊖ incr. payload ⊕ 1200 kg payload 1400 kg payload			97035900		
			Bre		2446902	[+] 24469 19	⊖ incr. payload ⊕ 1600 kg payload					
			Bre		82073400		⊕ 1100 kg payload 1500 kg payload					
			Bre		82073700		⊕ 1700 kg payload ⊖ incr. payload					
			Bre		82075800		⊕ 1700 kg payload ⊕ incr. payload					
			Bre		82075900		⊕ 2000 kg payload					
					92157200	ø 280 x 28 x 69.5	⊕ 1700 kg payload ⊖ incr. payload					
					92157300	ø 300 x 32 x 73.5	⊕ 2000 kg payload					
				PRO	92116603	ø 280 x 24 x 65.5	payl.1100 kg→ →payl.1500 kg					
				PRO	92116703	ø 300 x 24 x 65.5	⊕ 1700 kg payload ⊕ incr. payload					
		155100	Bre		2446601	[+] 24466 19	⊕ 2000 kg payload ⊕ incr. payload	Bos		2446501	[–] 24465 18.8	
2.2 HDi 110	07/11→	81 / 110										
2.2 HDi 120	04/06→	88 / 120	Bre		2446602	[+] 24466 19	⊕ 1600 kg payload ⊕ incr. payload	Bos		82054200		
2.2 HDi 130	07/11→	96 / 130										
2.2 HDi 150	07/11→	110 / 150										
3.0 HDi 155	07/10→	115 / 157	Bre		2446701	[+] 24467 19	⊕ incr. payload ⊕ 2000 kg payload			92157400	ø 280 x 16 x 82	payl.1100 kg→ →payl.1500 kg ⊕ 1700 kg payload ⊖ incr. payload
3.0 HDi 160	09/06→	116 / 157										
3.0 HDi 180	07/11→	130 / 177	Bre		2446703	[+] 24467 19	⊕ incr. payload ⊕ 1600 kg payload			92157500	ø 280 x 16 x 80	⊕ 1700 kg payload ⊕ incr. payload
			Bre		2446801	[+] 24468 19	payl.1200 kg→ →payl.1400 kg ⊖ incr. payload			92157600	ø 300 x 16 x 80	⊕ 2000 kg payload
			Bre		2446802	[+] 24468 19	⊕ 1600 kg payload ⊖ incr. payload			91066700	ø 172 x 42	
			Bre		2446901	[+] 24469 19	⊖ incr. payload ⊕ 1200 kg payload 1400 kg payload			97035900		
			Bre		2446902	[+] 24469 19	⊖ incr. payload ⊕ 1600 kg payload					
			Bre		82073400		⊕ 1100 kg payload 1500 kg payload					
			Bre		82073700		⊕ 1700 kg payload ⊖ incr. payload					
			Bre		82075800		⊕ 1700 kg payload ⊕ incr. payload					
			Bre		82075900		⊕ 2000 kg payload					
					92157200	ø 280 x 28 x 69.5	⊕ 1700 kg payload ⊖ incr. payload					
					92157300	ø 300 x 32 x 73.5	⊕ 2000 kg payload					
				PRO	92116603	ø 280 x 24 x 65.5	payl.1100 kg→ →payl.1500 kg					
				PRO	92116703	ø 300 x 24 x 65.5	⊕ 1700 kg payload ⊕ incr. payload					
JUMPER Kasten (230L) 02/94→04/02 → JUMPER Box (230L), Page 281												
JUMPER Kasten (244) 04/02→ → JUMPER Box (244), Page 283												
JUMPER Kasten 04/06→ → JUMPER Box, Page 283												
JUMPER Platform/Chassis (230) 03/94→04/02												
		155200	Luc		2179701	[+] 21797 19.7	⊕ 27 + 31 ⊕ round plug ⊕ 1000 kg payload 1400 kg payload →16206253	Bre		2392101	[–] 23921 20.1	16194400→ ⊕ rear disc brake
1.9 TD	03/94→04/02	66 / 90										
1.9 TD	03/94→04/02	68 / 92										

CITROËN

CITROËN

JUMPER Platform/Chassis (230) 03/94→04/02

		kW / hp
2.0	03/94→04/02	80 / 109
2.5 D	03/94→04/02	63 / 86
2.5 D 4x4	03/00→04/02	63 / 86
2.5 TD	03/94→04/02	76 / 103
2.5 TDi	12/96→04/02	79 / 107
2.5 TDi 4x4	03/00→04/02	79 / 107
2.8 D	01/99→02/02	64 / 87
2.8 HDi	09/00→04/02	94 / 128
2.8 HDi	10/00→01/02	93 / 126

Luc		2179901	[+] 21799 19.7	⊕ 35 ⊕ 1800 kg payload ⊕ round plug →16205352	
Luc		2360201	[+] 23602 19.7	⊕ 27 + 31 ⊕ 1000 kg payload 1400 kg payload ⊕ flat plug →16206253	
Luc		2360301	[+] 23603 19.7	⊕ 35 ⊕ 1800 kg payload ⊕ flat plug →16205352	
Bre		2391701	[+] 23917 19.1	⊕ 27 + 31 payl.1000 kg→ →payl.1400 kg 16204256→	
Bre		2391901	[+] 23919 19.1	⊕ 35 ⊕ 1800 kg payload 16194400→	
Bre		82505900		2x	
Luc		82063300		→08/01	
	PRO	92073703	ø 280 x 18 x 65.5	⊕ 27 + 31 ⊕ 1000 kg payload 1400 kg payload →16206253	
	PRO	92116603	ø 280 x 24 x 65.5	⊕ 27 + 31 payl.1000 kg→ →payl.1400 kg	
	PRO	92116703	ø 300 x 24 x 65.5	⊕ 35 ⊕ 1800 kg payload	

		82061700		16194400→ ⊕ rear disc brake
Bre		82505900		2x
Luc		91047900	ø 254 x 57	⊕ rear drum brake ⊕ 27 + 31 ⊕ 1000 kg payload 1400 kg payload →16206253
Luc		91049600	ø 254 x 57	⊕ rear drum brake ⊕ 35 ⊕ 1800 kg payload →16209999
Lkh		91060900	ø 254 x 57	⊕ rear drum brake ⊕ 27 + 31 payl.1000 kg→ →payl.1400 kg 16204256→
Luc		97010300		Lucas
		97031300		Lockheed
Luc		84049600	bore ø 28.6 ø 254 x 57	⊕ rear drum brake ⊕ 35 ⊕ 1800 kg payload →16209999
		92116100	ø 280 x 16 x 82	⊕ rear disc brake 16194400→ ⊕ 27 + 31 payl.1000 kg→ →payl.1400 kg
	PRO	92116203	ø 280 x 16 x 82	⊕ rear disc brake 16194400→ ⊕ 35 ⊕ 1800 kg payload
		94010200	ø 254,0 x 63.5	⊕ rear drum brake ⊕ 27 + 31 payl.1000 kg→ →payl.1400 kg
		94014600	ø 254,0 x 64.5	⊕ rear drum brake ⊕ 35 ⊕ 1800 kg payload →16209999
		91062100	ø 172 x 42	
		97035300		

JUMPER Platform/Chassis (244) 02/02→

		155300
2.0 HDi	04/02→	62 / 84
2.2 HDi	02/02→06/06	74 / 101
2.2 HDi	04/02→	74 / 101
2.8 HDi	04/02→	94 / 128
2.8 HDi	05/04→	107 / 146
2.8 HDi 4x4	02/02→06/06	94 / 128

Bre		2391701	[+] 23917 19.1	⊕ 29 + 33 payl.1000 kg→ →payl.1400 kg	
Bre		2391901	[+] 23919 19.1	⊕ 35 ⊕ 1800 kg payload	
Bre		82505900			
	PRO	92116603	ø 280 x 24 x 65.5	⊕ 29 + 33 payl.1000 kg→ →payl.1400 kg	
	PRO	92116703	ø 300 x 24 x 65.5	⊕ 35 ⊕ 1800 kg payload	

Bre		2392101	[–] 23921 20.1	⊕ rear disc brake
		82061700		⊕ rear disc brake
Lkh		91060900	ø 254 x 57	⊕ rear drum brake payl.1000 kg→ →payl.1400 kg
		97031300		⊕ rear drum brake
Lkh		84060900	bore ø 27 ø 254 x 57	⊕ rear drum brake payl.1000 kg→ →payl.1400 kg
		92116100	ø 280 x 16 x 82	⊕ 29 + 33 payl.1000 kg→ →payl.1400 kg
	PRO	92116203	ø 280 x 16 x 82	⊕ 35 ⊕ 1800 kg payload
		94010200	ø 254,0 x 63.5	⊕ rear drum brake payl.1000 kg→ →payl.1400 kg
		91064800	ø 172 x 42	
		97035300		

JUMPER Platform/Chassis 04/06→

		155400
2.2 HDi 100	04/06→	74 / 101
2.2 HDi 110	07/11→	81 / 110
2.2 HDi 120	04/06→	88 / 120
2.2 HDi 130	07/11→	96 / 130
2.2 HDi 150	07/11→	110 / 150
3.0 HDi 145	07/10→	107 / 146
3.0 HDi 160	09/06→	116 / 157
3.0 HDi 180	07/11→	130 / 177

Bre		2446601	[+] 24466 19	⊕ 2000 kg payload ⊕ incr. payload
Bre		2446602	[+] 24466 19	⊕ 1600 kg payload ⊕ incr. payload
Bre		2446701	[+] 24467 19	⊕ incr. payload ⊕ 2000 kg payload
Bre		2446703	[+] 24467 19	⊕ incr. payload ⊕ 1600 kg payload
Bre		2446801	[+] 24468 19	payl.1200 kg→ →payl.1400 kg ⊖ incr. payload
Bre		2446802	[+] 24468 19	⊕ 1600 kg payload ⊖ incr. payload
Bre		2446901	[+] 24469 19	⊖ incr. payload ⊕ 1200 kg payload 1400 kg payload
Bre		2446902	[+] 24469 19	⊖ incr. payload ⊕ 1600 kg payload
Bre		82073400		⊕ 1100 kg payload 1500 kg payload
Bre		82073700		⊕ 1700 kg payload ⊖ incr. payload
Bre		82075800		⊕ 1700 kg payload ⊕ incr. payload
Bre		82075900		⊕ 2000 kg payload
		92157200	ø 280 x 28 x 69.5	⊕ 1700 kg payload ⊖ incr. payload
		92157300	ø 300 x 32 x 73.5	⊕ 2000 kg payload

Bos		2446501	[–] 24465 18.8	
Bos		82054200		
		92157400	ø 280 x 16 x 82	payl.1100 kg→ →payl.1500 kg ⊕ 1700 kg payload ⊖ incr. payload
		92157500	ø 280 x 16 x 80	⊕ 1700 kg payload ⊕ incr. payload
		92157600	ø 300 x 16 x 80	⊕ 2000 kg payload
		91066700	ø 172 x 42	
		97035900		

→

		kW / hp											
JUMPER Platform/Chassis 04/06→													
		155400											
2.2 HDi 100	04/06→	74 / 101		PRO	92116603	ø 280 x 24 x 65.5	payl.1100 kg→ →payl.1500 kg						
2.2 HDi 110	07/11→	81 / 110											
2.2 HDi 120	04/06→	88 / 120		PRO	92116703	ø 300 x 24 x 65.5	⊕ 1700 kg payload ⊕ incr. payload						
2.2 HDi 130	07/11→	96 / 130											
2.2 HDi 150	07/11→	110 / 150											
3.0 HDi 145	07/10→	107 / 146											
3.0 HDi 160	09/06→	116 / 157											
3.0 HDi 180	07/11→	130 / 177											
JUMPER Pritsche/Fahrgestell (230) 03/94→04/02 → JUMPER Platform/Chassis (230), Page 285													
JUMPER Pritsche/Fahrgestell (244) 02/02→ → JUMPER Platform/Chassis (244), Page 286													
JUMPER Pritsche/Fahrgestell 04/06→ → JUMPER Platform/Chassis, Page 286													
JUMPY (U6U) 10/95→08/00													
		155500	Luc		2026101	[+] 20261 19.3	Orga 9793→ 2003-08-31→	Ben		91047800	ø 255 x 61		
1.6	10/95→	58 / 79											
1.9 D 70	04/98→	51 / 69	Gir		2180101	[+] 21801 19.3	Orga 9156→ 2001-12-02→ →Orga 9792 →2003-08-30 ⊕ 815 kg payload	Ben		97009600			
1.9 TD	10/95→	66 / 90					→Orga 9792 →2003-08-30 ⊕ 900 kg payload	Ben		84047800	bore ø 19 ø 255 x 61		
1.9 TD	04/96→	68 / 92											
2.0	04/00→12/06	100 / 136											
2.0 HDi 110	03/00→	80 / 109											
2.0 HDi 95	10/99→	69 / 94											
2.0 i 16V	03/00→	102 / 138	Ben		2304201	[+] 23042 19	→Orga 9155 →2001-12-01 ⊕ 815 kg payload			94015000	ø 255,0 x 67		
			Ben		82030200		→Orga 9155 →2001-12-01 ⊕ 815 kg payload						
			Gir		82059500		Orga 9793→ 2003-08-31→						
			Luc		82063300		Orga 9156→ 2001-12-02→ →Orga 9792 →2003-08-30 ⊕ 815 kg payload						
							→Orga 9792 →2003-08-30 ⊕ 900 kg payload						
			Luc		82063500		Orga 9793→ 2003-08-31→						
					92088000	ø 257 x 20 x 40.5	→Orga 9155 →2001-12-01 ⊕ 815 kg payload						
					92115000	ø 285 x 28 x 43.5	Orga 9793→ 2003-08-31→						
				PRO	92074003	ø 281 x 26 x 43.5	Orga 9156→ 2001-12-02→ →Orga 9792 →2003-08-30 ⊕ 815 kg payload						
							→Orga 9792 →2003-08-30 ⊕ 900 kg payload						
		155600	Gir		2180101	[+] 21801 19.3	⊕ 900 kg payload	Ben		91047800	ø 255 x 61		
1.6	10/95→08/00	59 / 80	Ben		2304201	[+] 23042 19	⊕ 815 kg payload	Ben		97009600			
			Ben		82030200		⊕ 815 kg payload	Ben		84047800	bore ø 19 ø 255 x 61		
			Luc		82063300		⊕ 900 kg payload			94015000	ø 255,0 x 67		
					92088000	ø 257 x 20 x 40.5	⊕ 815 kg payload						
				PRO	92074003	ø 281 x 26 x 43.5	⊕ 900 kg payload						
		155700	Luc		2026101	[+] 20261 19.3	Orga 09793→ 2003-08-31→	Ben		91047800	ø 255 x 61		
2.0 HDi 110	03/00→	80 / 109	Gir		2180101	[+] 21801 19.3	→Orga 09792 →2003-08-30	Ben		97009600			
			Luc		82055400		2x	Ben		84047800	bore ø 19 ø 255 x 61		
			Gir		82059500		Orga 09793→ 2003-08-31→			94015000	ø 255,0 x 67		
			Luc		82063300		→Orga 09792 →2003-08-30						
			Luc		82063500		Orga 09793→ 2003-08-31→						
					92115000	ø 285 x 28 x 43.5	Orga 09793→ 2003-08-31→						
				PRO	92074003	ø 281 x 26 x 43.5	→Orga 09792 →2003-08-30						
JUMPY 01/07→													
		155800	Luc		2459501	[+] 24595 18.3		Luc		2457801	[–] 24578 16.6		
1.6 HDi 90 16V	01/07→	66 / 90	Luc		82073300			Luc		82073900			
					92156900	ø 280 x 28 x 48.1	→Orga 11743 →2009-01-01 ⊕ rear drum brake	Luc		91049600	ø 254 x 57		
					92157000	ø 304 x 28 x 48	Orga 11744→ 2009-01-02→ ⊕ rear drum brake	Luc		97010300			
							⊕ rear disc brake			84049601	bore ø 22.2 ø 254 x 57		

CITROËN

CITROËN

		kW / hp											
JUMPY 01/07→													
		155800											
1.6 HDi 90 16V	01/07→	66 / 90								92157100	ø 290 x 14 x 49	
										TPM0012		
										94032900	ø 254,0 x 68	⊕ rear drum brake
		155900	Luc		2459501	[+] 24595 18.3		Luc		2457801	[–] 24578 16.6	
2.0 HDi 120	01/07→	88 / 120										
2.0 HDi 140	01/07→	100 / 136	Luc		82073300			Luc		82073900		
2.0 i	01/07→	103 / 140			92157000	ø 304 x 28 x 48				92157100	ø 290 x 14 x 49	
										TPM0012		
		156000	Luc		2459501	[+] 24595 18.3		Luc		2457801	[–] 24578 16.6	
2.0 HDi 125	07/11→	94 / 128										
2.0 HDi 95	07/11→	72 / 95	Luc		82073300			Luc		82073900		
					92157000	ø 304 x 28 x 48				92157100	ø 290 x 14 x 49	
		156100	Luc		2459501	[+] 24595 18.3		Luc		2457801	[–] 24578 16.6	
2.0 HDi 165	07/10→	120 / 163										
			Luc		82073300			Luc		82073900		
					92157000	ø 304 x 28 x 48				92157100	ø 290 x 14 x 49	
					TPM0012					TPM0012		
JUMPY Box (BS_, BT_, BY_, BZ_) 10/95→08/00													
		156200	Gir		2180101	[+] 21801 19.3	⊕ 900 kg payload	Ben		91047800	ø 255 x 61	
1.6	10/95→08/00	59 / 80										
1.9 DT	10/95→08/00	65 / 88	Ben		2304201	[+] 23042 19	⊕ 815 kg payload	Ben		97009600		
			Ben		82030200		⊕ 815 kg payload	Ben		84047800	bore ø 19 ø 255 x 61	
			Luc		82063300		⊕ 900 kg payload			94015000	ø 255,0 x 67	
					92088000	ø 257 x 20 x 40.5	⊕ 815 kg payload					
				PRO	92074003	ø 281 x 26 x 43.5	⊕ 900 kg payload					
		156300	Luc		2026101	[+] 20261 19.3	Orga 9793→ 2003-08-31→	Ben		91047800	ø 255 x 61	
1.6 i	10/95→	58 / 79										
1.9 D 70	04/98→	51 / 69	Gir		2180101	[+] 21801 19.3	Orga 9156→ 2001-12-02→ →Orga 9792 →2003-08-30 ⊕ 815 kg payload	Ben		97009600		
1.9 TD	10/95→	66 / 90										
2.0 HDi 110	01/02→	80 / 109					→Orga 9792 →2003-08-30 ⊕ 900 kg payload	Ben		84047800	bore ø 19 ø 255 x 61	
2.0 HDi 95	10/99→	69 / 94										
2.0 i 16V	03/00→	102 / 138	Ben		2304201	[+] 23042 19	→Orga 9155 →2001-12-01 ⊕ 815 kg payload			94015000	ø 255,0 x 67	
			Ben		82030200		→Orga 9155 →2001-12-01 ⊕ 815 kg payload					
			Gir		82059500		Orga 9793→ 2003-08-31→					
			Luc		82063300		Orga 9156→ 2001-12-02→ →Orga 9792 →2003-08-30 ⊕ 815 kg payload					
							→Orga 9792 →2003-08-30 ⊕ 900 kg payload					
			Luc		82063500		Orga 9793→ 2003-08-31→					
					92088000	ø 257 x 20 x 40.5	→Orga 9155 →2001-12-01 ⊕ 815 kg payload					
					92115000	ø 285 x 28 x 43.5	Orga 9793→ 2003-08-31→					
				PRO	92074003	ø 281 x 26 x 43.5	Orga 9156→ 2001-12-02→ →Orga 9792 →2003-08-30 ⊕ 815 kg payload					
							→Orga 9792 →2003-08-30 ⊕ 900 kg payload					
		156400	Luc		2026101	[+] 20261 19.3	Orga 09793→ 2003-08-31→	Ben		91047800	ø 255 x 61	
2.0 HDi 110	01/02→	80 / 109	Gir		2180101	[+] 21801 19.3	→Orga 09792 →2003-08-30	Ben		97009600		
			Luc		82055400		2x	Ben		84047800	bore ø 19 ø 255 x 61	
			Gir		82059500		Orga 09793→ 2003-08-31→			94015000	ø 255,0 x 67	
			Luc		82063300		→Orga 09792 →2003-08-30					
			Luc		82063500		Orga 09793→ 2003-08-31→					

→

		kW / hp									
JUMPY Box (BS_, BT_, BY_, BZ_) 10/95→08/00											
156400											
2.0 HDi 110	01/02→	80 / 109		**92115000**	ø 285 x 28 x 43.5	Orga 09793→ 2003-08-31→					
			PRO	**92074003**	ø 281 x 26 x 43.5	→Orga 09792 →2003-08-30					
JUMPY Box 01/07→											
156500			Luc	**2459501**	[+] 24595 18.3		Luc	**2457801**	[–] 24578 16.6		
1.6 HDi 90 16V	01/07→	66 / 90	Luc	**82073300**			Luc	**82073900**			
				92156900	ø 280 x 28 x 48.1	→Orga 11743 →2009-01-01 ⊕ rear drum brake	Luc	**91049600**	ø 254 x 57		
				92157000	ø 304 x 28 x 48	Orga 11744→ 2009-01-02→ ⊕ rear drum brake ⊕ rear disc brake	Luc	**97010300**			
								84049601	bore ø 22.2 ø 254 x 57		
								92157100	ø 290 x 14 x 49		
								TPM0012			
								94032900	ø 254,0 x 68	⊕ rear drum brake	
156600			Luc	**2459501**	[+] 24595 18.3		Luc	**2457801**	[–] 24578 16.6		
2.0 HDi 120	01/07→	88 / 120									
2.0 HDi 140	01/07→	100 / 136									
2.0 i	01/07→	103 / 140	Luc	**82073300**			Luc	**82073900**			
				92157000	ø 304 x 28 x 48			**92157100**	ø 290 x 14 x 49		
								TPM0012			
156700			Luc	**2459501**	[+] 24595 18.3		Luc	**2457801**	[–] 24578 16.6		
2.0 HDi 125	07/11→	94 / 128									
2.0 HDi 95	07/11→	72 / 95	Luc	**82073300**			Luc	**82073900**			
				92157000	ø 304 x 28 x 48			**92157100**	ø 290 x 14 x 49		
156800			Luc	**2459501**	[+] 24595 18.3		Luc	**2457801**	[–] 24578 16.6		
2.0 HDi 165	07/10→	120 / 163	Luc	**82073300**			Luc	**82073900**			
				92157000	ø 304 x 28 x 48			**92157100**	ø 290 x 14 x 49		
				TPM0012				**TPM0012**			
JUMPY Kasten (BS_, BT_, BY_, BZ_) 10/95→08/00 → JUMPY Box (BS_, BT_, BY_, BZ_), Page 288											
JUMPY Kasten 01/07→ → JUMPY Box, Page 289											
JUMPY Platform/Chassis (BU_, BV_, BW_, BX_) 10/99→10/06											
156900			Luc	**2026101**	[+] 20261 19.3	Orga 9793→ 2003-08-31→	Ben	**91047800**	ø 255 x 61		
1.9 TD	10/99→	68 / 92									
2.0 HDi 95	10/99→	69 / 94	Gir	**2180101**	[+] 21801 19.3	→Orga 9792 →2003-08-30	Ben	**97009600**			
			Gir	**82059500**		Orga 9793→ 2003-08-31→	Ben	**84047800**	bore ø 19 ø 255 x 61		
			Luc	**82063300**		→Orga 9792 →2003-08-30		**94015000**	ø 255,0 x 67		
			Luc	**82063500**		Orga 9793→ 2003-08-31→					
				92115000	ø 285 x 28 x 43.5	Orga 9793→ 2003-08-31→					
			PRO	**92074003**	ø 281 x 26 x 43.5	→Orga 9792 →2003-08-30					
157000			Luc	**2026101**	[+] 20261 19.3		Ben	**91047800**	ø 255 x 61		
2.0	12/03→10/06	100 / 136									
2.0 HDi 110	12/03→10/06	80 / 109	Gir	**82059500**			Ben	**97009600**			
2.0 HDi 110 16V	12/03→10/06	80 / 109	Luc	**82063500**			Ben	**84047800**	bore ø 19 ø 255 x 61		
				92115000	ø 285 x 28 x 43.5			**94015000**	ø 255,0 x 67		
JUMPY Pritsche/Fahrgestell (BU_, BV_, BW_, BX_) 10/99→10/06 → JUMPY Platform/Chassis (BU_, BV_, BW_, BX_), Page 289											
NEMO Box (AA_) 02/08→											
157100			Bos	**2370601**	[+] 23706 17.8			**91067600**	ø 228.6 x 42		
1.3 HDi 75	10/10→	55 / 75	Bos	**82054300**			Lkh	**97030900**			
			PRO	**92069603**	ø 257 x 22 x 40.5			**94034000**	ø 228,3 x 48		

CITROËN

CITROËN

			30 kW / hp									
NEMO Box (AA_) 02/08→												
1.4	02/08→	157200 54 / 73	Bos	2397903	[+] 23979 17.8			91065300	ø 203.2 x 38			
			Bos	82054300				97031600				
			PRO	92069603	ø 257 x 22 x 40.5			83065300	bore ø 20.6 ø 203.2 x 38			
							Lkh	84065301	bore ø 20.6 ø 203.2 x 38			
							Lkh	84065300	bore ø 19 ø 203.2 x 38			
								94034100	ø 203,2 x 47			
1.4 HDi	02/08→	157300 50 / 68	Bos	2397903	[+] 23979 17.8			91065300	ø 203.2 x 38	Orga 12369→ 2010-09-19→		
			Bos	82054300				91067600	ø 228.6 x 42	→Orga 12368 →2010-09-18		
			PRO	92069603	ø 257 x 22 x 40.5			94034000	ø 228,3 x 48			
NEMO Estate 04/09→												
1.3 HDi 75	10/10→	157400 55 / 75	Bos	2370601	[+] 23706 17.8			91067600	ø 228.6 x 42			
			Bos	82054300			Lkh	97030900				
			PRO	92069603	ø 257 x 22 x 40.5			94034000	ø 228,3 x 48			
1.4	04/09→	157500 54 / 73	Bos	2397903	[+] 23979 17.8			91065300	ø 203.2 x 38			
			Bos	82054300				97031600				
			PRO	92069603	ø 257 x 22 x 40.5			83065300	bore ø 20.6 ø 203.2 x 38			
							Lkh	84065301	bore ø 20.6 ø 203.2 x 38			
							Lkh	84065300	bore ø 19 ø 203.2 x 38			
								94034100	ø 203,2 x 47			
1.4 HDi	04/09→	157600 50 / 68	Bos	2397903	[+] 23979 17.8			91065300	ø 203.2 x 38	Orga 12369→ 2010-09-19→		
			Bos	82054300				91067600	ø 228.6 x 42	→Orga 12368 →2010-09-18		
			PRO	92069603	ø 257 x 22 x 40.5		Lkh	97030900				
								94034000	ø 228,3 x 48			
NEMO Kasten (AA_) 02/08→ → NEMO Box (AA_), Page 289												
NEMO Kombi 04/09→ → NEMO Estate, Page 290												
RELAY Box (230L) 02/94→04/02 → JUMPER Box (230L), Page 281												
RELAY Box (244) 04/02→ → JUMPER Box (244), Page 283												
RELAY Bus (230P) 02/94→04/02 → JUMPER Bus (230P), Page 284												
RELAY Bus (244, Z_) 04/02→ → JUMPER Bus (244, Z_), Page 284												
RELAY Bus 04/06→ → JUMPER Bus, Page 285												
RELAY Kasten (230L) 02/94→04/02 → JUMPER Box (230L), Page 281												
RELAY Kasten (244) 04/02→ → JUMPER Box (244), Page 283												
RELAY Platform/Chassis (230) 03/94→04/02 → JUMPER Platform/Chassis (230), Page 285												
RELAY Platform/Chassis (244) 02/02→ → JUMPER Platform/Chassis (244), Page 286												
RELAY Platform/Chassis 04/06→ → JUMPER Platform/Chassis, Page 286												
RELAY Pritsche/Fahrgestell (230) 03/94→04/02 → JUMPER Platform/Chassis (230), Page 285												
RELAY Pritsche/Fahrgestell (244) 02/02→ → JUMPER Platform/Chassis (244), Page 286												
RELAY Pritsche/Fahrgestell 04/06→ → JUMPER Platform/Chassis, Page 286												
RELAY Van 04/06→ → JUMPER Box, Page 283												
SAXO (S0, S1) 02/96→04/04												
1.0 X	05/98→06/03	157700 37 / 50	Ate	2185701	[–] 21857 17	⊕ rim 3 hole solid disc	Ben	91031100	ø 180 x 32	⊕ rim 4 hole		
			Ate	2182702	[–] 21827 17.3	vented disc Teves ⊕ rim 4 hole		91038000	ø 165 x 32	⊕ rim 3 hole		
			Ben	2090602	[o] 20906 18	⊕ rim 4 hole	Ben	91038201	ø 180 x 32	⊕ rim 4 hole ⊕ autom adjustm.		
			Ate	2126702	[+] 21267 17.6	⊕ rim 3 hole	Luc	91048000	ø 203.2 x 38	⊕ ABS		
			Ben	2090603	[+] 20906 18	⊕ rim 4 hole	Ben	97002700		⊕ rim 4 hole		

→

SAXO (S0, S1) 02/96→04/04

		kW / hp											
1.0 X	05/98→06/03	157700 37 / 50	Ben		82017500			Ben		97004600			⊕ rim 3 hole
			Ate		82028000		solid disc	Ben		97010400			⊕ ABS
			Ate		82030600		vented disc Teves ⊕ rim 4 hole	Luc		83048007	bore ø 20.6 ø 203.2 x 38		⊕ ABS
			Ate		82062900		vented disc	Ben		84038204	bore ø 19 ø 180 x 32		⊕ rim 4 hole ⊕ autom adjustm.
					92038500	ø 238 x 8 x 29	Teves ⊕ rim 3 hole	Luc		84048004	bore ø 20.6 ø 203.2 x 38		→Orga 8095 →1999-01-06 ⊕ ABS
				PRO	92029803	ø 247 x 10 x 34	Bendix ⊕ rim 4 hole	Luc		84048006	bore ø 20.6 ø 203.2 x 38		⊕ ABS Orga 8096→ 1999-01-07→
				PRO	92043103	ø 247 x 20.4 x 34.2	Teves ⊕ rim 4 hole			94028200	ø 203 x 46.5		
					TPM0012					94014100	ø 164,9 x 38.5		⊕ rim 3 hole
										94016900	ø 180,0 x 40.5		⊕ rim 4 hole
1.1 BiFuel	07/00→06/03	157800 44 / 60	Ate		2185701	[–] 21857 17	⊕ rim 3 hole solid disc	Ben		2097401	[o] 20974 11		⊕ rear disc brake
			Ate		2182702	[–] 21827 17.3	vented disc ⊕ rim 4 hole	Luc		91048000	ø 203.2 x 38		⊕ rear drum brake ⊕ ABS
			Ben		2090602	[o] 20906 18	⊕ rim 4 hole solid disc ⊕ ABS	Ben		97010400			⊕ ABS
			Ben		2090506	[+] 20905 18	⊕ rim 4 hole ⊖ ABS solid disc		PRO	92055003	ø 247 x 8 x 25.3		⊕ rear disc brake
			Ate		82030600		vented disc Teves ⊕ rim 4 hole			TPM0012			
					92038500	ø 238 x 8 x 29	Teves ⊕ rim 3 hole			94028200	ø 203 x 46.5		⊕ ABS ⊕ rear drum brake
				PRO	92029803	ø 247 x 10 x 34	Bosch ⊕ rim 4 hole			94014100	ø 164,9 x 38.5		⊕ rim 3 hole ⊕ rear drum brake
				PRO	92043103	ø 247 x 20.4 x 34.2	Teves ⊕ rim 4 hole			94014200	ø 179,9 x 46		⊕ rim 4 hole ⊖ ABS ⊕ rear drum brake
					TPM0012								
1.1 X,SX	05/96→09/03	157900 40 / 54	Ate		2185701	[–] 21857 17	⊕ rim 3 hole solid disc	Ben		91031100	ø 180 x 32		⊕ rim 4 hole
			Ate		2182702	[–] 21827 17.3	vented disc Teves ⊕ rim 4 hole			91038000	ø 165 x 32		⊕ rim 3 hole
			Ben		2090602	[o] 20906 18	⊕ rim 4 hole	Ben		91038201	ø 180 x 32		⊕ rim 4 hole ⊕ autom adjustm.
			Ate		2126702	[+] 21267 17.6	⊕ rim 3 hole	Luc		91048000	ø 203.2 x 38		⊕ ABS
			Ben		2090603	[+] 20906 18	⊕ rim 4 hole	Ben		97002700			⊕ rim 4 hole
			Ben		82017500			Ben		97004600			⊕ rim 3 hole
			Ate		82028000		solid disc	Ben		97010400			⊕ ABS
			Ate		82030600		vented disc Teves ⊕ rim 4 hole			84038002	bore ø 19 ø 165 x 32		⊕ rim 3 hole
			Ate		82062900		vented disc	Ben		84038204	bore ø 19 ø 180 x 32		⊕ rim 4 hole ⊕ autom adjustm.
					92038500	ø 238 x 8 x 29	Teves ⊕ rim 3 hole	Luc		84048004	bore ø 20.6 ø 203.2 x 38		→Orga 8095 →1999-01-06 ⊕ ABS
				PRO	92029803	ø 247 x 10 x 34	Bendix ⊕ rim 4 hole	Luc		84048006	bore ø 20.6 ø 203.2 x 38		⊕ ABS Orga 8096→ 1999-01-07→
				PRO	92043103	ø 247 x 20.4 x 34.2	Teves ⊕ rim 4 hole			94028200	ø 203 x 46.5		
					TPM0012					94014100	ø 164,9 x 38.5		⊕ rim 3 hole
										94016900	ø 180,0 x 40.5		⊕ rim 4 hole
1.1 X,SX	05/96→09/03	158000 44 / 60	Ate		2185701	[–] 21857 17	⊕ rim 3 hole solid disc	Ben		91031100	ø 180 x 32		⊕ rim 4 hole
			Ate		2182702	[–] 21827 17.3	vented disc ⊕ rim 4 hole			91038000	ø 165 x 32		⊕ rim 3 hole
			Ben		2090602	[o] 20906 18	⊕ rim 4 hole solid disc ⊕ ABS	Ben		91038201	ø 180 x 32		⊕ rim 4 hole ⊕ autom adjustm.
			Ben		2090506	[+] 20905 18	⊕ rim 4 hole ⊖ ABS solid disc	Luc		91048000	ø 203.2 x 38		⊕ ABS
			Ben		82017500			Ben		97002700			⊕ rim 4 hole
			Ate		82028000		solid disc	Ben		97004600			⊕ rim 3 hole
			Ate		82030600		vented disc Teves ⊕ rim 4 hole	Ben		97010400			⊕ ABS
			Ate		82062900		vented disc			84038002	bore ø 19 ø 165 x 32		⊕ rim 3 hole

CITROËN

CITROËN

SAXO (S0, S1) 02/96→04/04

		kW / hp												
1.1 X,SX	05/96→09/03	158000 44 / 60			92038500	ø 238 x 8 x 29	Teves ⊕ rim 3 hole	Ben		84038204	bore ø 19 ø 180 x 32	⊕ rim 4 hole ⊕ autom adjustm.
				PRO	92029803	ø 247 x 10 x 34	Bendix ⊕ rim 4 hole	Luc		84048004	bore ø 20.6 ø 203.2 x 38	→Orga 8095 →1999-01-06 ⊕ ABS
				PRO	92043103	ø 247 x 20.4 x 34.2	Teves ⊕ rim 4 hole	Luc		84048006	bore ø 20.6 ø 203.2 x 38	⊕ ABS Orga 8096→ 1999-01-07→
					TPM0012					94028200	ø 203 x 46.5	
										94014100	ø 164,9 x 38.5	⊕ rim 3 hole
										94016900	ø 180,0 x 40.5	⊕ rim 4 hole
1.4 VTS	05/96→06/03	158100 55 / 75	Ate		2185701	[–] 21857 17	⊕ rim 3 hole solid disc	Ben		91031100	ø 180 x 32	Bendix
			Ate		2182702	[–] 21827 17.3	vented disc Teves ⊕ rim 4 hole	Ben		91038201	ø 180 x 32	⊕ autom adjustm.
			Ben		2090602	[o] 20906 18	solid disc	Luc		91048000	ø 203.2 x 38	⊕ ABS
			Ate		2143001	[+] 21430 17.3	vented disc	Ben		97002700		Bendix
			Ben		2090603	[+] 20906 18	solid disc	Ben		97010400		⊕ ABS
			Ben		82017500		solid disc	Ben		84038204	bore ø 19 ø 180 x 32	⊕ autom adjustm.
			Ate		82028000		solid disc	Luc		84048004	bore ø 20.6 ø 203.2 x 38	→Orga 8095 →1999-01-06 ⊕ ABS
			Ate		82030600		vented disc Teves ⊕ rim 4 hole	Luc		84048004	bore ø 20.6 ø 203.2 x 38	⊕ ABS
			Ate		82062900		vented disc	Luc		84048006	bore ø 20.6 ø 203.2 x 38	⊕ ABS Orga 8096→ 1999-01-07→
				PRO	92029803	ø 247 x 10 x 34	Bendix			TPM0012		
				PRO	92043103	ø 247 x 20.4 x 34.2	Teves			94028200	ø 203 x 46.5	
					TPM0012					94016900	ø 180,0 x 40.5	⊖ ABS
1.5 D	09/96→06/01	158200 42 / 57	Ate		2185701	[–] 21857 17	⊕ rim 3 hole solid disc	Ben		91031100	ø 180 x 32	Bendix
1.5 D	09/96→09/03	40 / 54										
1.5 D	07/01→04/04	43 / 58	Ate		2182702	[–] 21827 17.3	vented disc Teves ⊕ rim 4 hole	Ben		91038201	ø 180 x 32	⊕ autom adjustm.
			Ben		2090602	[o] 20906 18	solid disc	Luc		91048000	ø 203.2 x 38	⊕ ABS
			Ate		2143001	[+] 21430 17.3	vented disc	Ben		97002700		Bendix
			Ben		2090603	[+] 20906 18	solid disc	Ben		97010400		⊕ ABS
			Ben		82017500		solid disc	Ben		84038204	bore ø 19 ø 180 x 32	⊕ autom adjustm.
			Ate		82028000		solid disc	Luc		84048004	bore ø 20.6 ø 203.2 x 38	→Orga 8095 →1999-01-06 ⊕ ABS
			Ate		82030600		vented disc Teves ⊕ rim 4 hole	Luc		84048006	bore ø 20.6 ø 203.2 x 38	⊕ ABS Orga 8096→ 1999-01-07→
			Ate		82062900		vented disc			TPM0012		
				PRO	92029803	ø 247 x 10 x 34	Bendix			94028200	ø 203 x 46.5	
				PRO	92043103	ø 247 x 20.4 x 34.2	Teves			94016900	ø 180,0 x 40.5	⊖ ABS
					TPM0012							
1.6	02/96→06/03	158300 66 / 90	Ate		2185701	[–] 21857 17	⊕ rim 3 hole solid disc Teves	Ben		2097401	[o] 20974 11	⊕ rear disc brake
			Ate		2182702	[–] 21827 17.3	Teves vented disc	Ben		82029500		
			Ate		2143001	[+] 21430 17.3	Teves vented disc	Ben		91031100	ø 180 x 32	⊕ rear drum brake ⊖ autom. adjustm.
			Ben		2090603	[+] 20906 18	Bendix	Ben		91038201	ø 180 x 32	⊕ rear drum brake ⊕ autom adjustm.
			Ben		82017500			Luc		91048000	ø 203.2 x 38	⊕ rear drum brake ⊕ ABS
			Ate		82028000		solid disc	Ben		97002700		⊕ rear drum brake ⊕ autom adjustm.
			Ate		82030600		Teves vented disc	Ben		97010400		⊕ rear drum brake ⊕ ABS
			Ate		82062900		vented disc	Ben		84038204	bore ø 19 ø 180 x 32	⊕ rear drum brake ⊕ autom adjustm.
				PRO	92043103	ø 247 x 20.4 x 34.2			PRO	92055003	ø 247 x 8 x 25.3	⊕ rear disc brake
					TPM0012					TPM0012		

→

		kW / hp										
SAXO (S0, S1) 02/96→04/04												
		158300										
1.6	02/96→06/03	66 / 90								94028200	ø 203 x 46.5	
										94016900	ø 180,0 x 40.5	⊕ rear drum brake ⊖ ABS
		158400	Ate	2185701	[–] 21857 17	⊕ rim 3 hole solid disc Teves	Ben	2097401	[o] 20974 11	⊕ rear disc brake		
1.6	02/96→04/04	88 / 120										
1.6	02/01→04/04	74 / 101	Ate	2182702	[–] 21827 17.3	Teves vented disc	Ben	82029500				
1.6 VTL,VTR	05/96→06/03	65 / 88										
			Ate	2143001	[+] 21430 17.3	Teves vented disc	Ben	91031100	ø 180 x 32	⊕ rear drum brake ⊖ autom. adjustm.		
			Ben	2090603	[+] 20906 18	Bendix	Ben	91038201	ø 180 x 32	⊕ rear drum brake ⊕ autom adjustm.		
			Ben	82017500			Luc	91048000	ø 203.2 x 38	⊕ rear drum brake ⊕ ABS		
			Ate	82028000		solid disc	Ben	97002700		⊕ rear drum brake ⊕ autom adjustm.		
			Ate	82030600		Teves vented disc	Ben	97010400		⊕ rear drum brake ⊕ ABS		
			Ate	82062900		vented disc	Ben	84038204	bore ø 19 ø 180 x 32	⊕ rear drum brake ⊕ autom adjustm.		
				92043103	ø 247 x 20.4 x 34.2		Luc	84048001	bore ø 20.6 ø 203.2 x 38	⊕ ABS →Orga 8095 →1999-01-06		
				TPM0012			Luc	84048006	bore ø 20.6 ø 203.2 x 38	⊕ ABS Orga 8096→ 1999-01-07→		
								92055003	ø 247 x 8 x 25.3	⊕ rear disc brake		
								TPM0012				
								94028200	ø 203 x 46.5			
								94016900	ø 180,0 x 40.5	⊕ rear drum brake ⊖ ABS		
		158500	Ate	2185701	[–] 21857 17	⊕ rim 3 hole solid disc Teves	Ben	2097401	[o] 20974 11	⊕ rear disc brake		
1.6 VTR	05/96→07/99	80 / 109										
			Ate	2182702	[–] 21827 17.3	Teves vented disc	Ben	82029500				
			Ate	2143001	[+] 21430 17.3	Teves vented disc	Ben	91031100	ø 180 x 32	⊕ rear drum brake ⊖ autom. adjustm.		
			Ben	2090603	[+] 20906 18	Bendix	Ben	91038201	ø 180 x 32	⊕ rear drum brake ⊕ autom adjustm.		
			Ben	82017500			Luc	91048000	ø 203.2 x 38	⊕ rear drum brake ⊕ ABS		
			Ate	82028000		solid disc	Ben	97002700		⊕ rear drum brake ⊕ autom adjustm.		
			Ate	82030600		Teves vented disc	Ben	97010400		⊕ rear drum brake ⊕ ABS		
			Ate	82062900		vented disc		92055003	ø 247 x 8 x 25.3	⊕ rear disc brake		
				92043103	ø 247 x 20.4 x 34.2			94016900	ø 180,0 x 40.5	⊕ rear drum brake ⊖ ABS		
		158600	Ate	2185701	[–] 21857 17	⊕ rim 3 hole solid disc Teves	Ben	2097401	[o] 20974 11	⊕ rear disc brake		
1.6 VTS	06/96→09/03	87 / 118										
1.6 VTS	09/00→09/03	72 / 98	Ate	2182702	[–] 21827 17.3	Teves vented disc	Ben	82029500				
			Ate	2143001	[+] 21430 17.3	Teves vented disc	Ben	91031100	ø 180 x 32	⊕ rear drum brake ⊖ autom. adjustm.		
			Ben	2090603	[+] 20906 18	Bendix	Ben	91038201	ø 180 x 32	⊕ rear drum brake ⊕ autom adjustm.		
			Ben	82017500			Luc	91048000	ø 203.2 x 38	⊕ rear drum brake ⊕ ABS		
			Ate	82028000		solid disc	Ben	97002700		⊕ rear drum brake ⊕ autom adjustm.		
			Ate	82030600		Teves vented disc	Ben	97010400		⊕ rear drum brake ⊕ ABS		
			Ate	82062900		vented disc		92055003	ø 247 x 8 x 25.3	⊕ rear disc brake		
				92043103	ø 247 x 20.4 x 34.2			TPM0012				
				TPM0012				94016900	ø 180,0 x 40.5	⊕ rear drum brake ⊖ ABS		
		158700	Ben	2090602	[o] 20906 18		Ben	91038201	ø 180 x 32	⊕ rim 4 hole ⊕ autom adjustm.		
Electric	11/96→06/03	20 / 27										
			Ben	2090603	[+] 20906 18		Ben	84038204	bore ø 19 ø 180 x 32	⊕ autom adjustm.		
			Ben	82017500				94016900	ø 180,0 x 40.5	⊕ rim 4 hole		
			Ate	82062900		vented disc						
				92029803	ø 247 x 10 x 34							

CITROËN

CITROËN

		kW / hp										
SYNERGIE (22, U6) 06/94→07/02 → EVASION (22, U6), Page 281												
XANTIA (X2) 01/98→04/03												
		158800	Ben		**2163102**	[+] 21631 17		Cit		**2016203**	[–] 20162 15.4	
1.6 i SX	01/98→03/01	65 / 88	Ben		**82030200**			Cit		**82026800**		
				PRO	**92048103**	ø 266 x 20.5 x 27.4				**92059700**	ø 224 x 9 x 57.5	
					TPM0012					**TPM0012**		
		158900	Ben		**2163102**	[+] 21631 17		Cit		**2016203**	[–] 20162 15.4	
1.8 i	01/98→04/03	66 / 90										
1.8 i 16V	01/98→04/03	81 / 110	Ben		**82030200**			Cit		**82026800**		
1.9 SD	01/98→04/03	55 / 75	Ben		**82063600**					**92059700**	ø 224 x 9 x 57.5	
				PRO	**92048103**	ø 266 x 20.5 x 27.4						
					TPM0012							
		159000	Ben		**2163102**	[+] 21631 17	⊖ engine XUD9TE	Cit		**2016203**	[–] 20162 15.4	
1.9 Turbo D	01/98→04/03	66 / 90	Bos		**2313503**	[+] 23135 18	⊕ engine XUD9TE ⊕ autom.	Cit		**82026800**		
			Ben		**82030200**					**92059700**	ø 224 x 9 x 57.5	
			Ben		**82063600**							
					92107800	ø 288 x 28 x 34.2						
				PRO	**92048103**	ø 266 x 20.5 x 27.4						
					TPM0012							
		159100	Bos		**2313503**	[+] 23135 18		Cit		**2016203**	[–] 20162 15.4	
2.0 HDI 109	02/99→04/03	80 / 109										
2.0 HDI 90	03/99→04/03	66 / 90										
3.0 V6	01/98→04/03	140 / 190			**92107800**	ø 288 x 28 x 34.2		Cit		**82026800**		
					TPM0012					**92059700**	ø 224 x 9 x 57.5	
		159200	Ben		**2163201**	[+] 21632 16		Cit		**2016203**	[–] 20162 15.4	
2.0 i	01/98→04/03	89 / 121	Ben		**82030200**			Cit		**82026800**		
			Ben		**82063600**					**92059700**	ø 224 x 9 x 57.5	
					92059600	ø 283 x 22 x 27						
					TPM0012							
		159300	Ben		**2163201**	[+] 21632 16		Cit		**2016203**	[–] 20162 15.4	
2.0 i 16V	01/98→04/03	97 / 132	Bos		**2313503**	[+] 23135 18	⊕ hydro pneum. susp. 10/98→	Cit		**82026800**		
			Ben		**2314601**	[+] 23146 17	⊕ hydro pneum. susp. →10/98			**92059700**	ø 224 x 9 x 57.5	
			Ben		**82030200**							
			Ben		**82063600**							
					92059600	ø 283 x 22 x 27						
					92107800	ø 288 x 28 x 34.2	⊕ hydro pneum. susp. 10/98→					
				PRO	**92078703**	ø 283 x 26 x 28.2	⊕ hydro pneum. susp. →10/98					
					TPM0012							
		159400	Bos		**2313503**	[+] 23135 18	10/98→	Cit		**2016203**	[–] 20162 15.4	
2.0 Turbo	01/98→04/03	108 / 147										
2.1 Turbo D 12V	01/98→02/99	80 / 109	Ben		**2314601**	[+] 23146 17	→10/98	Cit		**82026800**		
					92107800	ø 288 x 28 x 34.2	10/98→			**92059700**	ø 224 x 9 x 57.5	
				PRO	**92078703**	ø 283 x 26 x 28.2	→10/98					
					TPM0012							

		kW / hp											
XANTIA Break (X2) 01/98→04/03													
		159500	Ben		2163102	[+] 21631 17		Cit		2038902	[–] 20389 16	
1.8 i	01/98→04/03	66 / 90										
1.8 i 16V	01/98→04/03	81 / 110	Ben		82030200			Cit		82510600		
			Ben		82063600					92076800	ø 251 x 12 x 62.4	
				PRO	92048103	ø 266 x 20.5 x 27.4						
		159600	Ben		2163201	[+] 21632 16		Cit		2038902	[–] 20389 16	
1.9 SD	01/98→04/03	55 / 75										
2.0 i	01/98→04/03	89 / 121										
2.0 i 16V	01/98→04/03	97 / 132	Ben		82030200			Cit		82510600		
			Ben		82063600					92076800	ø 251 x 12 x 62.4	
					92059600	ø 283 x 22 x 27						
		159700	Ben		2163201	[+] 21632 16		Cit		2038902	[–] 20389 16	
1.9 Turbo D	01/98→04/03	66 / 90										
			Bos		2313503	[+] 23135 18	⊕ engine XUD9TE ⊕ autom.	Cit		82510600		
			Ben		82030200					92076800	ø 251 x 12 x 62.4	
			Ben		82063600							
					92059600	ø 283 x 22 x 27						
					92107800	ø 288 x 28 x 34.2						
		159800	Bos		2313503	[+] 23135 18		Cit		2038902	[–] 20389 16	
2.0 HDI 109	02/99→04/03	80 / 109										
2.0 HDI 90	03/99→04/03	66 / 90										
3.0 V6	01/98→04/03	140 / 190			92107800	ø 288 x 28 x 34.2		Cit		82510600		
										92076800	ø 251 x 12 x 62.4	
		159900	Bos		2313503	[+] 23135 18	10/98→	Cit		2038902	[–] 20389 16	
2.0 Turbo	01/98→04/03	108 / 147										
2.1 Turbo D 12V	01/98→02/99	80 / 109	Ben		2314601	[+] 23146 17	→10/98	Cit		82510600		
					92107800	ø 288 x 28 x 34.2	10/98→			92076800	ø 251 x 12 x 62.4	
				PRO	92078703	ø 283 x 26 x 28.2	→10/98					
XANTIA Estate (X2) 01/98→04/03 → XANTIA Break (X2), Page 295													
XM (Y4) 05/94→10/00													
		160000	Ben		2150401	[+] 21504 17		Cit		2016203	[–] 20162 15.4	
2.0 i 16V	05/94→10/00	97 / 132										
2.0 Turbo	05/94→10/00	108 / 147										
2.1 TD 12V	05/94→10/00	80 / 109	Ben		82030300			Cit		82026800		
3.0 V6	05/94→10/00	123 / 167	Ben		82063600					92054500	ø 224 x 9 x 63	
					92064500	ø 283 x 26 x 48						
				PRO	92232503	ø 283 x 26 x 48						
		160100	Ate		2121102	[o] 21211 18.7	Teves →05/97	Cit		2016203	[–] 20162 15.4	
2.5 TD	05/94→10/00	95 / 129										
			Ben		2150401	[+] 21504 17	Bendix →05/97	Cit		82026800		
			Bos		2313503	[+] 23135 18	06/97→			92054500	ø 224 x 9 x 63	→05/97
			Ben		82030300		→05/97					
			Ben		82063600		→05/97					
					92064500	ø 283 x 26 x 48	→05/97					
					92108000	ø 288 x 28 x 50	06/97→					
				PRO	92232503	ø 283 x 26 x 48	→05/97					
		160200	Bos		2313503	[+] 23135 18		Cit		2016203	[–] 20162 15.4	
3.0 V6	04/97→10/00	140 / 190										
					92108000	ø 288 x 28 x 50		Cit		82026800		
										92054500	ø 224 x 9 x 63	
		160300	Ate		2121102	[o] 21211 18.7	Teves	Cit		2016203	[–] 20162 15.4	
3.0 V6 24V	05/94→10/00	147 / 200										

CITROËN

CITROËN

kW / hp

XM (Y4) 05/94→10/00

160300													
3.0 V6 24V	05/94→10/00	147 / 200	Ben		2150401	[+] 21504 17	Bendix	Cit		82026800		
			Ben		82030300					92054500	ø 224 x 9 x 63	
			Ben		82063600							
					92064500	ø 283 x 26 x 48	Bendix					
				PRO	92232503	ø 283 x 26 x 48	Bendix					

XM Break (Y4) 05/94→10/00

160400													
2.0 i 16V	05/94→10/00	97 / 132	Ben		2150401	[+] 21504 17		Cit		2038902	[–] 20389 16	
2.0 Turbo	05/94→10/00	108 / 147	Ben		82030300			Cit		82026800		
2.1 TD 12V	05/94→10/00	80 / 109	Ben		82063600					92059900	ø 250 x 12 x 62.4	
3.0 V6	05/94→10/00	123 / 167			92064500	ø 283 x 26 x 48						
				PRO	92232503	ø 283 x 26 x 48						
160500			Ate		2121102	[o] 21211 18.7	Teves →05/97	Cit		2038902	[–] 20389 16	
2.5 TD	05/94→10/00	95 / 129	Ben		2150401	[+] 21504 17	Bendix →05/97	Cit		82026800		
			Bos		2313503	[+] 23135 18	06/97→			92059900	ø 250 x 12 x 62.4	
			Ben		82030300		→05/97					
			Ben		82063600		→05/97					
					92064500	ø 283 x 26 x 48	→05/97					
					92108000	ø 288 x 28 x 50	06/97→					
				PRO	92232503	ø 283 x 26 x 48	→05/97					
160600			Bos		2313503	[+] 23135 18		Cit		2038902	[–] 20389 16	
3.0 V6	04/97→10/00	140 / 190			92108000	ø 288 x 28 x 50		Cit		82026800		
										92059900	ø 250 x 12 x 62.4	

XM Estate (Y4) 05/94→10/00 → XM Break (Y4), Page 296

XSARA (N1) 04/97→03/05

160700													
1.4 HDi	01/03→03/05	50 / 68	Bos		2395401	[–] 23954 19		Luc		91031200	ø 180 x 32	Lucas
			Bos		82054200			Ben		91045200	ø 180 x 32	Bendix
			Bos		82063700			Luc		91048000	ø 203.2 x 38	⊕ ABS
				PRO	92111503	ø 266 x 22 x 34		Bos		91056600	ø 228.6 x 42	
					TPM0012			Ben		97004700		Bendix
								Luc		97007600		Lucas
								Ben		97010400		⊕ ABS
								Luc		84048006	bore ø 20.6 ø 203.2 x 38	⊕ ABS
										TPM0012		
										94014300	ø 180,0 x 44.5	⊖ ABS
										94024900	ø 202 x 46.5	⊕ ABS
160800			Bos		2359703	[–] 23597 18	⊖ ABS	Luc		91031200	ø 180 x 32	Lucas
1.4 i	04/97→03/05	55 / 75	Ate		2182702	[–] 21827 17.3	⊕ ABS	Ben		91045200	ø 180 x 32	Bendix
			Bos		2395401	[–] 23954 19	08/00→	Luc		91048000	ø 203.2 x 38	⊕ ABS
			Bos		82054200		08/00→	Ben		97004700		Bendix
			Ate		82030600		⊕ ABS	Luc		97007600		Lucas
			Ate		82062900		Teves	Ben		97010400		⊕ ABS

→

XSARA (N1) 04/97→03/05

		kW / hp									
1.4 i	04/97→03/05	160800 55 / 75	Bos	82063700		Bosch	Luc	84031202	bore ø 20.6 ø 180 x 32	Lucas
			PRO	92092803	ø 247 x 13 x 34.2	→08/00	Ben	84045201	bore ø 20.6 ø 180 x 32	Bendix
			PRO	92043103	ø 247 x 20.4 x 34.2	⊕ ABS →08/00	Luc	84048001	bore ø 20.6 ø 203.2 x 38	⊕ ABS →Orga 8728 →2000-09-30
			PRO	92111503	ø 266 x 22 x 34	08/00→	Luc	84048006	bore ø 20.6 ø 203.2 x 38	⊕ ABS Orga 8729→ 2000-10-01→
				TPM0012				94014300	ø 180,0 x 44.5	⊖ ABS
								94024900	ø 202 x 46.5	⊕ ABS
1.4 LPG	05/98→08/00	160900 55 / 75	Bos	2339602	[–] 23396 18	⊖ ABS	Luc	91031200	ø 180 x 32	⊖ ABS
			Bos	2359703	[–] 23597 18	⊖ ABS	Ben	91045200	ø 180 x 32	⊖ ABS
			Ate	2182702	[–] 21827 17.3		Bos	91056600	ø 228.6 x 42	
			Gir	2312401	[+] 23124 19.3	⊕ ABS	Ben	97004700		⊖ ABS
			Ate	82030600			Bos	97010100		
			PRO	92048103	ø 266 x 20.5 x 27.4		Ben	97010400		⊕ ABS
				TPM0012			Luc	83048007	bore ø 20.6 ø 203.2 x 38	⊕ ABS
							Bos	84056602	bore ø 20.6 ø 228.6 x 42	⊖ ABS
								TPM0012		
								94010300	ø 229,0 x 50.5	
								94014300	ø 180,0 x 44.5	⊖ ABS
								94024900	ø 202 x 46.5	⊕ ABS
1.5 D	04/97→09/00	161000 42 / 57	Bos	2359703	[–] 23597 18	⊖ ABS	Luc	91031200	ø 180 x 32	Lucas
			Ate	2182702	[–] 21827 17.3	⊕ ABS	Ben	91045200	ø 180 x 32	Bendix
			Ate	82030600		⊕ ABS	Luc	91048000	ø 203.2 x 38	⊕ ABS
			Ate	82062900		Teves	Ben	97004700		Bendix
			Bos	82063700		Bosch	Luc	97007600		Lucas
			PRO	92092803	ø 247 x 13 x 34.2	→08/00	Ben	97010400		⊕ ABS
			PRO	92043103	ø 247 x 20.4 x 34.2	⊕ ABS →08/00	Luc	84031202	bore ø 20.6 ø 180 x 32	Lucas
			PRO	92111503	ø 266 x 22 x 34	08/00→	Luc	84048001	bore ø 20.6 ø 203.2 x 38	⊕ ABS
				TPM0012				94014300	ø 180,0 x 44.5	⊖ ABS
								94024900	ø 202 x 46.5	⊕ ABS
1.6 16V	09/00→03/05	161100 80 / 109	Bos	2395401	[–] 23954 19		Ben	2097401	[o] 20974 11	
			Bos	82054200				92055003	ø 247 x 8 x 25.3	
			Bos	82063700				TPM0012		
			PRO	92111503	ø 266 x 22 x 34					
				TPM0012						
1.6 i	04/97→09/00	161200 65 / 88	Ate	2182702	[–] 21827 17.3	→08/00	Luc	91031200	ø 180 x 32	Lucas
1.8 D	04/97→09/00	43 / 58								
1.8 i	04/97→09/00	66 / 90	Bos	2395401	[–] 23954 19	08/00→	Ben	91045200	ø 180 x 32	Bendix
1.8 i Aut.	04/97→09/00	74 / 101								
1.9 D	04/97→09/00	50 / 68	Bos	82054200		08/00→	Luc	91048000	ø 203.2 x 38	⊕ ABS
			Ate	82030600		→08/00	Bos	91056600	ø 228.6 x 42	
			Ate	82062900		→08/00	Ben	97004700		Bendix
			Bos	82063700		08/00→	Luc	97007600		Lucas
			PRO	92043103	ø 247 x 20.4 x 34.2	→08/00	Ben	97010400		⊕ ABS

CITROËN

CITROËN

30 kW / hp

XSARA (N1) 04/97→03/05

161200														
1.6 i	04/97→09/00	65 / 88		PRO	92111503	ø 266 x 22 x 34	08/00→		Luc		84031202	bore ø 20.6 ø 180 x 32	Lucas
1.8 D	04/97→09/00	43 / 58			TPM0012				Ben		84045201	bore ø 20.6 ø 180 x 32	Bendix
1.8 i	04/97→09/00	66 / 90											
1.8 i Aut.	04/97→09/00	74 / 101							Luc		84048001	bore ø 20.6 ø 203.2 x 38	⊕ ABS
1.9 D	04/97→09/00	50 / 68									94014300	ø 180,0 x 44.5	⊖ ABS
											94024900	ø 202 x 46.5	⊕ ABS
161300			Bos		2333201	[–] 23332 18	Bosch		Ben		2097401	[o] 20974 11	⊕ rear disc brake
1.8 BiFuel	07/97→08/00	82 / 111	Gir		2312401	[+] 23124 19.3	Lucas		Ben		82029500		
			Luc		82063300					PRO	92055003	ø 247 x 8 x 25.3	⊕ rear disc brake
			Bos		82063700								
				PRO	92048103	ø 266 x 20.5 x 27.4							
					TPM0012								
161400			Bos		2333201	[–] 23332 18	Bosch		Ben		2097401	[o] 20974 11	
1.8 i 16V	04/97→09/00	81 / 110	Gir		2312401	[+] 23124 19.3	Lucas		Ben		82029500		
			Luc		82063300					PRO	92055003	ø 247 x 8 x 25.3	
			Bos		82063700								
				PRO	92048103	ø 266 x 20.5 x 27.4							
					TPM0012								
161500			Ate		2182702	[–] 21827 17.3	→08/00		Luc		91031200	ø 180 x 32	Lucas
1.8 TD	10/97→09/00	66 / 90	Bos		2395401	[–] 23954 19	08/00→		Ben		91045200	ø 180 x 32	Bendix
			Bos		82054200		08/00→		Luc		91048000	ø 203.2 x 38	⊕ ABS
			Ate		82030600		→08/00		Bos		91056600	ø 228.6 x 42	
			Ate		82062900		→08/00		Ben		97004700		Bendix
			Bos		82063700		08/00→		Luc		97007600		Lucas
				PRO	92043103	ø 247 x 20.4 x 34.2	→08/00		Ben		97010400		⊕ ABS
				PRO	92111503	ø 266 x 22 x 34	08/00→		Luc		84048001	bore ø 20.6 ø 203.2 x 38	⊕ ABS
					TPM0012						94014300	ø 180,0 x 44.5	⊖ ABS
											94024900	ø 202 x 46.5	⊕ ABS
161600			Bos		2333201	[–] 23332 18	Bosch		Ben		2097401	[o] 20974 11	⊕ rear disc brake
1.8 VTS	09/00→10/04	85 / 116	Gir		2312401	[+] 23124 19.3	Lucas		Ben		82029500		
			Luc		82063300					PRO	92055003	ø 247 x 8 x 25.3	⊕ rear disc brake
			Bos		82063700								
				PRO	92048103	ø 266 x 20.5 x 27.4							
161700			Ate		2182702	[–] 21827 17.3	→08/00		Luc		91031200	ø 180 x 32	Lucas
1.9 D	07/98→03/05	51 / 70	Bos		2395401	[–] 23954 19	08/00→		Ben		91045200	ø 180 x 32	Bendix
			Bos		82054200		08/00→		Luc		91048000	ø 203.2 x 38	⊕ ABS
			Ate		82030600		→08/00		Bos		91056600	ø 228.6 x 42	
			Ate		82062900		→08/00		Ben		97004700		Bendix
			Bos		82063700		08/00→		Luc		97007600		Lucas
				PRO	92043103	ø 247 x 20.4 x 34.2	→08/00		Ben		97010400		⊕ ABS
				PRO	92111503	ø 266 x 22 x 34	08/00→		Luc		84031202	bore ø 20.6 ø 180 x 32	Lucas

→

		kW / hp											
XSARA (N1) 04/97→03/05													
1.9 D	07/98→03/05	161700 51 / 70			TPM0012			Ben		84045201	bore ø 20.6 ø 180 x 32	Bendix
								Luc		84048001	bore ø 20.6 ø 203.2 x 38	⊕ ABS →Orga 8728 →2000-09-30
								Luc		84048006	bore ø 20.6 ø 203.2 x 38	⊕ ABS Orga 8729→ 2000-10-01→
										94014300	ø 180,0 x 44.5	⊖ ABS
										94024900	ø 202 x 46.5	⊕ ABS
1.9 SD	01/98→09/00	161800 55 / 75	Ate		2182702	[–] 21827 17.3	→08/00	Luc		91031200	ø 180 x 32	Lucas
			Bos		2395401	[–] 23954 19	08/00→	Ben		91045200	ø 180 x 32	Bendix
			Bos		82054200		08/00→	Luc		91048000	ø 203.2 x 38	⊕ ABS
			Ate		82030600		→08/00	Bos		91056600	ø 228.6 x 42	
			Ate		82062900		→08/00	Ben		97004700		Bendix
			Bos		82063700		08/00→	Luc		97007600		Lucas
				PRO	92043103	ø 247 x 20.4 x 34.2	→08/00	Ben		97010400		⊕ ABS
				PRO	92111503	ø 266 x 22 x 34	08/00→	Luc		84048001	bore ø 20.6 ø 203.2 x 38	
										94014300	ø 180,0 x 44.5	⊖ ABS
										94024900	ø 202 x 46.5	⊕ ABS
1.9 TD	04/97→09/00	161900 66 / 90	Ate		2182702	[–] 21827 17.3		Luc		91048000	ø 203.2 x 38	
			Ate		82030600			Ben		97010400		
			Ate		82062900			Luc		84048001	bore ø 20.6 ø 203.2 x 38	
				PRO	92043103	ø 247 x 20.4 x 34.2				94024900	ø 202 x 46.5	⊕ ABS
2.0 16V	04/97→09/00	162000 120 / 163	Luc		2167403	[+] 21674 19.3		Ben		2097401	[o] 20974 11	
					92059600	ø 283 x 22 x 27		Ben		82029500		
					TPM0012				PRO	92055003	ø 247 x 8 x 25.3	
2.0 16V	07/98→09/00	162100 97 / 132	Bos		2333201	[–] 23332 18	Bosch	Ben		2097401	[o] 20974 11	
			Gir		2312401	[+] 23124 19.3	Lucas	Ben		82029500		
			Luc		82063300				PRO	92055003	ø 247 x 8 x 25.3	
			Bos		82063700							
				PRO	92048103	ø 266 x 20.5 x 27.4						
2.0 16V	09/00→03/05	162200 100 / 136	Bos		2360001	[–] 23600 19	01/02→	Ben		2097401	[o] 20974 11	
			Luc		2167403	[+] 21674 19.3	→12/01	Ben		82029500		
			Bos		82063700		01/02→		PRO	92055003	ø 247 x 8 x 25.3	
					92059600	ø 283 x 22 x 27	→12/01			TPM0012		
				PRO	92111603	ø 283 x 26 x 34	01/02→					
					TPM0012							
2.0 HDi 109	05/01→03/05	162300 80 / 109	Bos		2360001	[–] 23600 19	01/02→	Ben		2097401	[o] 20974 11	
			Luc		2167403	[+] 21674 19.3	→12/01	Ben		82029500		
			Bos		82063700		01/02→		PRO	92055003	ø 247 x 8 x 25.3	
					92059600	ø 283 x 22 x 27	→12/01					
				PRO	92111603	ø 283 x 26 x 34	01/02→					
					TPM0012							
2.0 HDi 90	02/99→03/05	162400 66 / 90	Bos		2339602	[–] 23396 18	Bosch →08/00	Ben		2097401	[o] 20974 11	

CITROËN

CITROËN

		kW / hp										
XSARA (N1) 04/97→03/05												
2.0 HDi 90	02/99→03/05	162400 66 / 90	Bos	2395401	[–] 23954 19	08/00→	Ben	82029500		
			Gir	2312401	[+] 23124 19.3	Lucas →08/00		PRO 92055003	ø 247 x 8 x 25.3	
			Bos	82054200		08/00→		TPM0012		
			Luc	82063300		→08/00				
			Bos	82063700						
				92059600	ø 283 x 22 x 27	Lucas →12/01				
				PRO 92048103	ø 266 x 20.5 x 27.4					
				PRO 92111503	ø 266 x 22 x 34	Bosch				
				PRO 92111603	ø 283 x 26 x 34	Bosch 01/02→				
				TPM0012						
XSARA Box 09/00→03/05										
2.0 HDi	09/00→03/05	162500 66 / 90	Bos	2395401	[–] 23954 19		Ben	2097401	[o] 20974 11	
			Bos	82054200			Ben	82029500		
			Bos	82063700				PRO 92055003	ø 247 x 8 x 25.3	
				PRO 92111603	ø 283 x 26 x 34					
XSARA Break (N2) 10/97→08/05										
1.4 HDi	01/03→08/05	162600 50 / 68	Bos	2395401	[–] 23954 19		Luc	91031200	ø 180 x 32	Lucas
			Bos	82054200			Luc	91048000	ø 203.2 x 38	⊕ ABS
			Bos	82063700			Bos	91056600	ø 228.6 x 42	
				PRO 92111503	ø 266 x 22 x 34		Bos	97006400		
				TPM0012			Luc	97007600		Lucas
							Ben	97010400		⊕ ABS
							Bos	84056600	bore ø 20.6 ø 228.6 x 42	
								TPM0012		
								94014300	ø 180,0 x 44.5	
1.4 i	10/97→08/05	162700 55 / 75	Ate	2182702	[–] 21827 17.3	→08/00	Luc	91031200	ø 180 x 32	Lucas
1.5 D	10/97→09/00	42 / 57	Bos	2395401	[–] 23954 19	08/00→	Luc	91048000	ø 203.2 x 38	⊕ ABS
1.6 i	10/97→09/00	65 / 88								
1.8 D	10/97→09/00	43 / 58								
1.9 D	10/97→09/00	50 / 68	Gir	2312401	[+] 23124 19.3	⊕ ABS →08/00	Bos	91056600	ø 228.6 x 42	
1.9 D	01/98→09/00	55 / 75								
1.9 D	07/98→08/05	51 / 70	Bos	82054200		08/00→	Bos	97006400		
			Ate	82030600		→08/00	Luc	97007600		Lucas
			Ate	82062900		→08/00	Ben	97010400		⊕ ABS
			Luc	82063300		→08/00 ⊕ ABS	Bos	84056600	bore ø 20.6 ø 228.6 x 42	
			Bos	82063700		08/00→		TPM0012		
				PRO 92043103	ø 247 x 20.4 x 34.2	→08/00		94014300	ø 180,0 x 44.5	
				PRO 92048103	ø 266 x 20.5 x 27.4	⊕ ABS →08/00				
				TPM0012						
1.4 LPG	05/98→08/00	162800 55 / 75	Bos	2339602	[–] 23396 18	⊕ ABS BOSCH -brake	Bos	91056600	ø 228.6 x 42	⊕ rear drum brake
			Ate	2182702	[–] 21827 17.3	⊖ ABS	Bos	97010100		⊕ rear drum brake
			Gir	2312401	[+] 23124 19.3	⊕ ABS GIRLING -brake	Bos	84056602	bore ø 20.6 ø 228.6 x 42	⊕ rear drum brake ⊖ ABS
			Ate	82030600		⊖ ABS		TPM0012		

→

XSARA Break (N2) 10/97→08/05

1.4 LPG	05/98→08/00	162800 55 / 75		PRO	92043103	ø 247 x 20.4 x 34.2	⊖ ABS			94010300	ø 229,0 x 50.5	
				PRO	92048103	ø 266 x 20.5 x 27.4	⊕ ABS					
					TPM0012							
1.6 16V	09/00→08/05	162900 80 / 109	Bos		2395401	[–] 23954 19		Ben		2097401	[o] 20974 11	
			Bos		82054200				PRO	92055003	ø 247 x 8 x 25.3	
			Bos		82063700					TPM0012		
				PRO	92111503	ø 266 x 22 x 34						
					TPM0012							
1.8 i	10/97→09/00	163000 66 / 90	Gir		2312401	[+] 23124 19.3		Ben		2097401	[o] 20974 11	⊕ rear disc brake
			Luc		82063300			Ben		82029500		⊕ rear disc brake
				PRO	92048103	ø 266 x 20.5 x 27.4		Bos		91056600	ø 228.6 x 42	⊕ rear drum brake
					TPM0012				PRO	92055003	ø 247 x 8 x 25.3	⊕ rear disc brake
										94010300	ø 229,0 x 50.5	⊕ rear drum brake
1.8 i 16V 2.0 16V	10/97→09/00 07/98→09/00	163100 81 / 110 97 / 132	Gir		2312401	[+] 23124 19.3		Ben		2097401	[o] 20974 11	⊕ rear disc brake
			Luc		82063300			Ben		82029500		
				PRO	92048103	ø 266 x 20.5 x 27.4			PRO	92055003	ø 247 x 8 x 25.3	⊕ rear disc brake
					TPM0012					TPM0012		
1.8 i Aut. 1.9 TD	10/97→09/00 10/97→09/00	163200 74 / 101 66 / 90	Gir		2312401	[+] 23124 19.3		Ben		2097401	[o] 20974 11	⊕ rear disc brake
			Luc		82063300			Ben		82029500		⊕ rear disc brake
				PRO	92048103	ø 266 x 20.5 x 27.4		Bos		91056600	ø 228.6 x 42	⊕ rear drum brake
					TPM0012				PRO	92055003	ø 247 x 8 x 25.3	⊕ rear disc brake
										TPM0012		
										94010300	ø 229,0 x 50.5	⊕ rear drum brake
1.8 LPG	05/98→08/00	163300 81 / 110	Gir		2312401	[+] 23124 19.3		Ben		2097401	[o] 20974 11	⊕ rear disc brake
			Luc		82063300			Ben		82029500		
				PRO	92048103	ø 266 x 20.5 x 27.4			PRO	92055003	ø 247 x 8 x 25.3	
2.0 16V 2.0 HDi 109	09/00→08/05 05/01→08/05	163400 100 / 136 80 / 109	Bos		2360001	[–] 23600 19	01/02→	Ben		2097401	[o] 20974 11	
			Luc		2167403	[+] 21674 19.3	→12/01	Ben		82029500		
			Bos		82063700		01/02→		PRO	92055003	ø 247 x 8 x 25.3	
					92059600	ø 283 x 22 x 27	→12/01			TPM0012		
				PRO	92111603	ø 283 x 26 x 34	01/02→					
					TPM0012							
2.0 HDI 90	02/99→08/05	163500 66 / 90	Bos		2339602	[–] 23396 18	Bosch →08/00	Ben		2097401	[o] 20974 11	
			Bos		2395401	[–] 23954 19	08/00→	Ben		82029500		
			Gir		2312401	[+] 23124 19.3	Lucas →08/00		PRO	92055003	ø 247 x 8 x 25.3	
			Bos		82063700					TPM0012		
					92059600	ø 283 x 22 x 27	Lucas →12/01					
				PRO	92111503	ø 266 x 22 x 34	Bosch					
				PRO	92111603	ø 283 x 26 x 34	Bosch 01/02→					
					TPM0012							

CITROËN

CITROËN

XSARA Coupe (N0) 01/98→03/05

		kW / hp										
1.4 HDi	01/03→03/05	163600 50 / 68	Bos	2395401	[–] 23954 19		Luc	91031200	ø 180 x 32	Lucas
			Bos	82054200			Ben	91045200	ø 180 x 32	Bendix
			Bos	82063700			Luc	91048000	ø 203.2 x 38	⊕ ABS
			PRO	92111503	ø 266 x 22 x 34		Bos	91056600	ø 228.6 x 42	
				TPM0012			Ben	97004700		Bendix
							Luc	97007600		Lucas
							Ben	97010400		⊕ ABS
							Luc	84048006	bore ø 20.6 ø 203.2 x 38	⊕ ABS
								TPM0012		
								94014300	ø 180,0 x 44.5	⊖ ABS
								94024900	ø 202 x 46.5	⊕ ABS
1.4 i	03/98→03/05	163700 55 / 75	Bos	2198004	[–] 21980 18	→08/00	Luc	91031200	ø 180 x 32	Lucas
			Ate	2182702	[–] 21827 17.3	⊕ ABS →08/00	Ben	91045200	ø 180 x 32	Bendix
			Bos	2395401	[–] 23954 19	08/00→	Luc	91048000	ø 203.2 x 38	⊕ ABS
			Bos	82054200		08/00→	Ben	97004700		Bendix
			Ate	82030600		⊕ ABS →08/00	Luc	97007600		Lucas
			Ate	82062900		→08/00 ⊕ ABS	Ben	97010400		⊕ ABS
			Bos	82063700			Luc	84031202	bore ø 20.6 ø 180 x 32	Lucas
			PRO	92092803	ø 247 x 13 x 34.2	→08/00	Ben	84045201	bore ø 20.6 ø 180 x 32	Bendix
			PRO	92043103	ø 247 x 20.4 x 34.2	⊕ ABS →08/00	Luc	84048001	bore ø 20.6 ø 203.2 x 38	⊕ ABS →Orga 8728 →2000-09-30
			PRO	92111503	ø 266 x 22 x 34	08/00→	Luc	84048006	bore ø 20.6 ø 203.2 x 38	⊕ ABS Orga 8729→ 2000-10-01→
				TPM0012				94014300	ø 180,0 x 44.5	⊖ ABS
								94024900	ø 202 x 46.5	⊕ ABS
1.6 16V	09/00→03/05	163800 80 / 109	Bos	2395401	[–] 23954 19		Ben	2097401	[o] 20974 11	
			Bos	82054200				92055003	ø 247 x 8 x 25.3	
			Bos	82063700				TPM0012		
			PRO	92111503	ø 266 x 22 x 34					
				TPM0012						
1.6 i	02/98→09/00	163900 65 / 88	Ate	2182702	[–] 21827 17.3	→08/00	Luc	91031200	ø 180 x 32	Lucas
1.8 i	02/98→09/00	66 / 90	Bos	2395401	[–] 23954 19	08/00→	Ben	91045200	ø 180 x 32	Bendix
1.8 i	02/98→09/00	74 / 101	Bos	82054200		08/00→	Luc	91048000	ø 203.2 x 38	⊕ ABS
			Ate	82030600		→08/00	Bos	91056600	ø 228.6 x 42	
			Ate	82062900		→08/00	Ben	97004700		Bendix
			Bos	82063700		08/00→	Luc	97007600		Lucas
			PRO	92043103	ø 247 x 20.4 x 34.2	→08/00	Ben	97010400		⊕ ABS
			PRO	92111503	ø 266 x 22 x 34	08/00→	Luc	84031202	bore ø 20.6 ø 180 x 32	Lucas
							Ben	84045201	bore ø 20.6 ø 180 x 32	Bendix
							Luc	84048001	bore ø 20.6 ø 203.2 x 38	⊕ ABS
								94014300	ø 180,0 x 44.5	⊖ ABS
								94024900	ø 202 x 46.5	⊕ ABS

→

XSARA Coupe (N0) 01/98→03/05

		164000	Bos		2333201	[–] 23332 18	Bosch	Ben		2097401	[o] 20974 11	⊕ rear disc brake
1.8 i 16V	02/98→09/00	81 / 110										
1.8 LPG	01/98→08/00	82 / 112	Gir		2312401	[+] 23124 19.3	Lucas	Ben		82029500		
			Luc		82063300				PRO	92055003	ø 247 x 8 x 25.3	⊕ rear disc brake
			Bos		82063700							
				PRO	92048103	ø 266 x 20.5 x 27.4						
					TPM0012							
		164100	Ate		2182702	[–] 21827 17.3	→08/00	Luc		91031200	ø 180 x 32	Lucas
1.9 D	02/98→09/00	50 / 68										
			Bos		2395401	[–] 23954 19	08/00→	Ben		91045200	ø 180 x 32	Bendix
			Bos		82054200		08/00→	Luc		91048000	ø 203.2 x 38	⊕ ABS
			Ate		82030600		→08/00	Bos		91056600	ø 228.6 x 42	
			Ate		82062900		→08/00	Ben		97004700		Bendix
			Bos		82063700		08/00→	Luc		97007600		Lucas
				PRO	92043103	ø 247 x 20.4 x 34.2	→08/00	Ben		97010400		⊕ ABS
				PRO	92111503	ø 266 x 22 x 34	08/00→	Luc		84031202	bore ø 20.6 ø 180 x 32	Lucas
										94014300	ø 180,0 x 44.5	⊖ ABS
										94024900	ø 202 x 46.5	⊕ ABS
		164200	Ate		2182702	[–] 21827 17.3	→08/00	Luc		91031200	ø 180 x 32	Lucas
1.9 D	02/99→03/05	51 / 70										
			Bos		2395401	[–] 23954 19	08/00→	Ben		91045200	ø 180 x 32	Bendix
			Bos		82054200		08/00→	Luc		91048000	ø 203.2 x 38	⊕ ABS
			Ate		82030600		→08/00	Bos		91056600	ø 228.6 x 42	
			Ate		82062900		→08/00	Ben		97004700		Bendix
			Bos		82063700		08/00→	Luc		97007600		Lucas
				PRO	92043103	ø 247 x 20.4 x 34.2	→08/00	Ben		97010400		⊕ ABS
				PRO	92111503	ø 266 x 22 x 34	08/00→	Luc		84031202	bore ø 20.6 ø 180 x 32	Lucas
					TPM0012			Ben		84045201	bore ø 20.6 ø 180 x 32	Bendix
								Luc		84048001	bore ø 20.6 ø 203.2 x 38	⊕ ABS →Orga 8728 →2000-09-30
								Luc		84048006	bore ø 20.6 ø 203.2 x 38	⊕ ABS Orga 8729→ 2000-10-01→
										94014300	ø 180,0 x 44.5	⊖ ABS
										94024900	ø 202 x 46.5	⊕ ABS
		164300	Ate		2182702	[–] 21827 17.3		Luc		91048000	ø 203.2 x 38	
1.9 TD	02/98→09/00	66 / 90										
			Ate		82030600			Ben		97010400		
			Ate		82062900					94024900	ø 202 x 46.5	⊕ ABS
				PRO	92043103	ø 247 x 20.4 x 34.2						
		164400	Luc		2167403	[+] 21674 19.3		Ben		2097401	[o] 20974 11	
2.0	08/98→08/00	97 / 132										
					92059600	ø 283 x 22 x 27		Ben		82029500		
									PRO	92055003	ø 247 x 8 x 25.3	
		164500	Bos		2360001	[–] 23600 19	01/02→	Ben		2097401	[o] 20974 11	
2.0 16V	09/00→03/05	100 / 136										
			Luc		2167403	[+] 21674 19.3	→12/01	Ben		82029500		
			Bos		82063700		01/02→		PRO	92055003	ø 247 x 8 x 25.3	
					92059600	ø 283 x 22 x 27	→12/01			TPM0012		

CITROËN

CITROËN

		kW / hp										
XSARA Coupe (N0) 01/98→03/05												
164500												
2.0 16V	09/00→03/05	100 / 136		PRO	92111603	ø 283 x 26 x 34	01/02→					
					TPM0012							
164600			Bos		2360001	[–] 23600 19	01/02→	Ben		2097401	[o] 20974 11	
2.0 HDi 109	05/01→03/05	80 / 109	Luc		2167403	[+] 21674 19.3	→12/01	Ben		82029500		
			Bos		82063700		01/02→		PRO	92055003	ø 247 x 8 x 25.3	
					92059600	ø 283 x 22 x 27	→12/01					
				PRO	92111603	ø 283 x 26 x 34	01/02→					
					TPM0012							
164700			Bos		2339602	[–] 23396 18	Bosch →08/00	Ben		2097401	[o] 20974 11	
2.0 HDI 90	02/99→03/05	66 / 90	Bos		2395401	[–] 23954 19	08/00→	Ben		82029500		
			Gir		2312401	[+] 23124 19.3	Lucas →08/00		PRO	92055003	ø 247 x 8 x 25.3	
			Bos		82054200		08/00→			TPM0012		
			Luc		82063300		→08/00					
			Bos		82063700							
					92059600	ø 283 x 22 x 27	Lucas →12/01					
				PRO	92111503	ø 266 x 22 x 34	Bosch					
				PRO	92111603	ø 283 x 26 x 34	Bosch 01/02→					
					TPM0012							
164800			Luc		2167403	[+] 21674 19.3		Ben		2097401	[o] 20974 11	
2.0 i 16V	02/98→03/05	120 / 163			92059600	ø 283 x 22 x 27		Ben		82029500		
					TPM0012				PRO	92055003	ø 247 x 8 x 25.3	
										TPM0012		
XSARA Estate (N2) 10/97→08/05 → XSARA Break (N2), Page 300												
XSARA Kasten 09/00→03/05 → XSARA Box, Page 300												
XSARA PICASSO (N68) 12/99→10/04												
164900			Luc		2334602	[–] 23346 19.3	Lucas	Luc		2355402	[–] 23554 17.2	⊕ rear disc brake
1.6	12/99→	65 / 88										
1.6	12/99→	70 / 95										
1.6 16V	06/05→09/06	81 / 110	Bos		2360001	[–] 23600 19	Bosch ⊕ ESP	Luc	epad	2355481	[–] 23554 17.2	⊕ rear disc brake
1.6 16V	09/05→	80 / 109										
1.6 Flex	10/06→06/12	83 / 113	Bos		2395401	[–] 23954 19	Bosch ⊖ ESP	Luc		82037300		
1.6 HDi	05/04→	80 / 109										
1.6 HDi	09/05→	66 / 90	Bos		82054200			Luc		82062800		
1.8 16V	02/00→	85 / 115										
2.0 16V	01/03→	100 / 136										
2.0 HDi	12/99→	66 / 90	Luc		82063300			Luc		91052900	ø 228.6 x 41.5	⊕ rear drum brake
2.0 HDi	12/99→	80 / 109										
			Bos		82063700			Luc		97012000		⊕ rear drum brake
			Bos		82510100		Bosch	Bos		97012100		
				PRO	92048103	ø 266 x 20.5 x 27.4	Lucas	Luc		84052900	bore ø 22.2 ø 228.6 x 41.5	⊕ rear drum brake
				PRO	92111503	ø 266 x 22 x 34	Bosch ⊖ ESP		PRO	92111703	ø 246.5 x 9 x 35	⊕ rear disc brake
				PRO	92111603	ø 283 x 26 x 34	Bosch ⊕ ESP			TPM0012		
					TPM0012					94010300	ø 229,0 x 50.5	⊕ rear drum brake
165000			Luc		2334602	[–] 23346 19.3	Lucas	Luc		2355402	[–] 23554 17.2	⊕ rear disc brake
1.6	06/02→	67 / 91										
1.6 Chrono	04/01→10/04	74 / 101	Bos		2360001	[–] 23600 19	Bosch ⊕ ESP	Luc	epad	2355481	[–] 23554 17.2	⊕ rear disc brake
1.8 SX	06/00→08/05	76 / 103										
			Bos		2395401	[–] 23954 19	Bosch ⊖ ESP	Luc		82037300		
			Bos		82054200			Luc		82062800		
			Luc		82063300			Luc		91052900	ø 228.6 x 41.5	⊕ rear drum brake

→

CITROËN

CITROËN

XSARA PICASSO (N68) 12/99→10/04

		kW / hp										
		165000	Bos		82063700			Luc		97012000		⊕ rear drum brake
1.6	06/02→	67 / 91										
1.6 Chrono	04/01→10/04	74 / 101	Bos		82510100		Bosch	Bos		97012100		
1.8 SX	06/00→08/05	76 / 103		PRO	92048103	ø 266 x 20.5 x 27.4	Lucas	Luc		84052900	bore ø 22.2 ø 228.6 x 41.5	⊕ rear drum brake
				PRO	92111503	ø 266 x 22 x 34	Bosch ⊖ ESP		PRO	92111703	ø 246.5 x 9 x 35	⊕ rear disc brake
				PRO	92111603	ø 283 x 26 x 34	Bosch ⊕ ESP			94010300	ø 229,0 x 50.5	⊕ rear drum brake
		165100	Luc		2334602	[–] 23346 19.3	Lucas	Luc		2355402	[–] 23554 17.2	⊕ rear disc brake
1.6 Flex	11/09→	81 / 110	Bos		2360001	[–] 23600 19	Bosch ⊕ ESP	Luc	epad	2355481	[–] 23554 17.2	⊕ rear disc brake
			Bos		2395401	[–] 23954 19	Bosch ⊖ ESP	Luc		82037300		
			Bos		82054200			Luc		91052900	ø 228.6 x 41.5	⊕ rear drum brake
			Bos		82510100		Bosch	Luc		97012000		⊕ rear drum brake
				PRO	92048103	ø 266 x 20.5 x 27.4	Lucas	Bos		97012100		
				PRO	92111503	ø 266 x 22 x 34	Bosch ⊖ ESP		PRO	92111703	ø 246.5 x 9 x 35	⊕ rear disc brake
				PRO	92111603	ø 283 x 26 x 34	Bosch ⊕ ESP			94010300	ø 229,0 x 50.5	⊕ rear drum brake
		165200	Luc		2334602	[–] 23346 19.3	Orga 0912878→ →Orga 1097678 Orga 1097778→ →Orga 1137678 Orga 1137778→ →Orga 09127FV →Orga 0912778	Luc		2355402	[–] 23554 17.2	Orga 09492→ Orga 09492FV→ Orga 09821UW→
2.0	02/04→10/04	88 / 120						Luc	epad	2355481	[–] 23554 17.2	Orga 09492→ Orga 09492FV→ Orga 09821UW→
			Bos		2360001	[–] 23600 19	Orga 09821UW→ Orga 09492FV→ Orga 09492→	Luc		91052900	ø 228.6 x 41.5	
			Bos		2410101	[–] 24101 19	Orga 09821UW→ Orga 09128FV→ Orga 11249CJ→	Luc		97012000		
				PRO	92048103	ø 266 x 20.5 x 27.4	Orga 0912878→ →Orga 1097678 Orga 1137778→ →Orga 09127FV →Orga 0912778		PRO	92111703	ø 246.5 x 9 x 35	Orga 09492FV→ Orga 09821UW→ Orga 09492→
				PRO	92111503	ø 266 x 22 x 34	Orga 1097778→ →Orga 1137678 Orga 09821UW→ Orga 09128FV→ Orga 11249CJ→			TPM0012		
				PRO	92111603	ø 283 x 26 x 34	Orga 09821UW→ Orga 09492FV→ Orga 09492→			94010300	ø 229,0 x 50.5	
					TPM0012							

DACIA

DACIA

1310 Estate 05/83→07/04

		kW / hp										
		165300	Ben		2014003	[o] 20140 14						
1.3	05/83→07/04	40 / 54			92009200	ø 228 x 10 x 38.5						

1310 Kombi 05/83→07/04 → 1310 Estate, Page 305

1310 Saloon (U, X) 05/83→07/04

		165400	Ben		2014003	[o] 20140 14						
1.3	05/83→07/04	40 / 54										
1.4 Classic	01/95→07/04	46 / 63			92009200	ø 228 x 10 x 38.5						
1.5	01/95→07/04	46 / 63										
1.9 D	01/03→07/04	48 / 65										

1310 Stufenheck (U, X) 05/83→07/04 → 1310 Saloon (U, X), Page 305

DOKKER 11/12→

		165500	Luc		2397301	[–] 23973 17.3	⊖ ESP			91069300	ø 228.6 x 42	
1.2 TCe	11/12→	85 / 115										
1.5 dCi	11/12→	55 / 75	Ate		2491401	[–] 24914 18	⊕ ESP					
1.5 dCi	11/12→	66 / 90										
1.6 16V	11/12→	61 / 83	Luc		82054900		⊖ ESP					
1.6 LPG	11/13→	61 / 83										
			Ate		82032000		⊕ ESP					

DACIA

DACIA

		kW / hp											
DOKKER 11/12→													
		165500											
1.2 TCe	11/12→	85 / 115		PRO	92254603	ø 280 x 24 x 44	⊕ ESP						
1.5 dCi	11/12→	55 / 75			TPM0004								
1.5 dCi	11/12→	66 / 90											
1.6 16V	11/12→	61 / 83											
1.6 LPG	11/13→	61 / 83											
DOKKER Express 12/12→													
		165600	Luc		2397301	[–] 23973 17.3	⊖ ESP			91069300	ø 228.6 x 42		
1.2 TCe 115	12/12→	84 / 114											
1.6 LPG	11/13→	61 / 83	Ate		2491401	[–] 24914 18	⊕ ESP	Bos		97010100			
			Ate		82032000			Bos		84069300	bore ø 22 ø 228.6 x 42		
				PRO	92254603	ø 280 x 24 x 44				97031900			
					TPM0004								
		165700	Luc		2397301	[–] 23973 17.3	⊖ ESP			91069300	ø 228.6 x 42		
1.5 dCi	12/12→	55 / 75											
1.5 dCi	12/12→	66 / 90	Ate		2491401	[–] 24914 18	⊕ ESP	Bos		97010100			
1.6 16V	12/12→	61 / 83											
			Ate		82032000								
				PRO	92254603	ø 280 x 24 x 44	⊕ ESP						
					TPM0004								
DUSTER 04/10→													
		165800	Luc		2397301	[–] 23973 17.3	⊖ ESP			91069300	ø 228.6 x 42		
1.5 dCi	04/10→	63 / 86											
1.5 dCi	06/10→	79 / 107	Ate		2491401	[–] 24914 18	⊕ ESP	Bos		97010100			
1.5 dCi	10/10→	66 / 90											
1.5 dCi	08/13→	80 / 109	Luc		82054900		⊖ ESP						
1.6 16V	04/10→	77 / 105											
1.6 16V Hi-Flex	08/10→	77 / 105	Ate		82032000		⊕ ESP						
1.6 16V LPG	04/11→	77 / 105											
					TPM0004								
		165900	Luc		2397301	[–] 23973 17.3	⊖ ESP						
1.5 dCi 4x4	06/10→	79 / 107											
1.5 dCi 4x4	10/10→	66 / 90	Ate		2491401	[–] 24914 18	⊕ ESP						
1.5 dCi 4x4	10/10→	81 / 110											
1.5 dCi 4x4	08/13→	80 / 109	Luc		82054900		⊖ ESP						
1.6 16V 4x4	06/10→	77 / 105											
			Ate		82032000		⊕ ESP						
					TPM0004								
LODGY 03/12→													
		166000	Luc		2397301	[–] 23973 17.3	⊖ ESP			91069300	ø 228.6 x 42		
1.2 TCe	03/12→	85 / 115											
1.5 dCi	03/12→	66 / 90	Ate		2491401	[–] 24914 18	⊕ ESP	Bos		97010100			
1.5 dCi	01/13→	79 / 107											
1.6	03/12→	61 / 83	Luc		82054900		⊖ ESP						
1.6 LPG	11/13→	61 / 83											
dCi 110 eco	03/12→	79 / 107	Ate		82032000		⊕ ESP						
				PRO	92254603	ø 280 x 24 x 44	⊖ ESP						
LOGAN (LS_) 09/04→													
		166100	Luc		2146306	[–] 21463 18.2	Ø 238 mm	Luc		91048000	ø 203.2 x 38	8" -brake	
1.2 16V	02/06→	55 / 75											
1.2 16V LPG	02/06→	55 / 75	Luc		2146304	[+] 21463 18.2	Ø 259 mm	Bos		91053700	ø 180 x 42	7" -brake	
1.4 (LSOA, LSOC, LSOE, LSOG)	09/04→	55 / 75											
1.4 MPI LPG (LSOC)	02/06→	55 / 75	Luc		82518600		Ø 259 mm			97031000		8" Bosch -brake	
1.5 dCi (LSO4)	05/10→	55 / 75											
1.5 dCi (LSO4)	05/10→	65 / 88		PRO	92036103	ø 238 x 12 x 41				97037900		8" TRW -brake	
1.5 dCi (LSOJ, LSOY)	09/05→	48 / 65											
1.5 dCi (LSOK)	01/06→	50 / 68											
1.5 dCi (LSOW)	09/07→	63 / 86		PRO	92175103	ø 259 x 12 x 41.4				94019700	ø 203,3 x 50.5	⊖ ABS	
1.6 (LSOB, LSOD, LSOF, LSOH)	09/04→	64 / 87											
1.6 16V (LSOM)	02/06→	77 / 105		PRO	92100903	ø 259 x 20.6 x 41				94023600	ø 180,2 x 53.5	⊖ ABS	
1.6 16V Flexifuel	07/10→	77 / 105											
1.6 Bifuel	05/10→	62 / 84			TPM0004								
1.6 MPI 85	05/10→	62 / 84											
LOGAN II 10/12→													
		166200	Ate		2573801	[–] 25738 18				91069300	ø 228.6 x 42	Petrol / Gas (bifuel)	
1.2	10/12→	55 / 75											
1.6 16V	12/12→	60 / 82		PRO	92175103	ø 259 x 12 x 41.4		Bos		97010100		Petrol / Gas (bifuel)	

→

		kW / hp									
LOGAN II 10/12→											
		166200		**TPM0004**				**97031000**			
1.2	10/12→	55 / 75									
1.6 16V	12/12→	60 / 82									
		166300	Ate	**2570201**	[–] 25702 18			**91069300**	ø 228.6 x 42	Petrol / Gas (bifuel)	
1.2 LPG	10/12→	55 / 75									
1.5 dCi	10/12→	55 / 75									
1.5 dCi	10/12→	66 / 90		**TPM0004**			Bos	**97010100**		Petrol / Gas (bifuel)	
TCe 90	10/12→	66 / 90						**97031000**			
		166400	Ate	**2570201**	[–] 25702 18			**97031000**			
1.5 dCi 100	12/12→	78 / 106									
1.5 dCi 85	12/12→	63 / 85		**TPM0004**							
LOGAN EXPRESS (FS_) 03/09→											
		166500	Luc	**2397301**	[–] 23973 17.3	⊕ ABS Ø 260 mm	Luc	**91048000**	ø 203.2 x 38	Lucas	
1.4	03/09→	55 / 75									
1.5 dCi (FSOK)	03/09→	50 / 68	Ate	**2467301**	[–] 24673 18	⊖ ABS Ø 259 mm	Bos	**91060200**	ø 203.2 x 38	Bosch	
1.5 dCi (FSOW)	03/09→	63 / 86									
1.6	03/09→	64 / 87	Luc	**82054900**		Ø 260 mm		**91069300**	ø 228.6 x 42		
			Luc	**82062800**		⊕ ABS	Ben	**97010400**		Lucas	
				92100903	ø 259 x 20.6 x 41	⊖ ABS		**97031000**		Bosch	
				92119203	ø 260 x 22 x 44		Bos	**84069300**	bore ø 22 ø 228.6 x 42		
				TPM0004				**94023600**	ø 180,2 x 53.5		
		166600	Luc	**2397301**	[–] 23973 17.3	⊕ ABS Ø 260 mm		**91069300**	ø 228.6 x 42	⊖ ABS	
1.5 dCi	05/10→	55 / 75									
1.5 dCi	05/10→	65 / 88	Ate	**2467301**	[–] 24673 18	⊖ ABS Ø 259 mm					
			Luc	**82054900**		Ø 260 mm					
				92100903	ø 259 x 20.6 x 41	⊖ ABS					
				92119203	ø 260 x 22 x 44						
		166700	Luc	**2397301**	[–] 23973 17.3	⊕ ABS Ø 260 mm	Luc	**91048000**	ø 203.2 x 38	Lucas	
1.6 MPI 85	05/10→	62 / 84									
			Ate	**2467301**	[–] 24673 18	⊖ ABS Ø 259 mm	Bos	**91060200**	ø 203.2 x 38	Bosch	
			Luc	**82054900**		Ø 260 mm		**91069300**	ø 228.6 x 42		
			Luc	**82062800**		⊕ ABS	Ben	**97010400**		Lucas	
				92100903	ø 259 x 20.6 x 41	⊖ ABS		**97031000**		Bosch	
				92119203	ø 260 x 22 x 44			**94023600**	ø 180,2 x 53.5		
				TPM0004							
LOGAN MCV (KS_) 02/07→											
		166800	Luc	**2397301**	[–] 23973 17.3	⊕ ABS Ø 260 mm	Luc	**91048000**	ø 203.2 x 38	Lucas	
1.4	02/07→	55 / 75									
1.5 dCi (KSOK)	02/07→	50 / 68	Ate	**2467301**	[–] 24673 18	⊖ ABS Ø 259 mm	Bos	**91060200**	ø 203.2 x 38	Bosch	
1.5 dCi (KSOW)	09/07→	63 / 86									
1.6	02/07→	64 / 87	Luc	**82054900**		Ø 260 mm		**91069300**	ø 228.6 x 42		
1.6 16V	02/07→	77 / 105	Luc	**82508200**		⊖ ABS	Ben	**97010400**		Lucas	
			Luc	**82062800**		⊕ ABS		**97031000**		Bosch	
				92100903	ø 259 x 20.6 x 41	⊖ ABS	Bos	**84069300**	bore ø 22 ø 228.6 x 42		
				92119203	ø 260 x 22 x 44			**94023600**	ø 180,2 x 53.5		
				TPM0004							
		166900	Luc	**2397301**	[–] 23973 17.3	⊕ ABS Ø 260 mm		**91069300**	ø 228.6 x 42	⊖ ABS	
1.5 dCi (KS04)	05/10→	55 / 75									
1.5 dCi (KS04)	05/10→	65 / 88	Ate	**2467301**	[–] 24673 18	⊖ ABS Ø 259 mm					
			Luc	**82054900**		Ø 260 mm					
			Luc	**82508200**		⊖ ABS					
			Luc	**82062800**		⊕ ABS					

DACIA

DACIA

		kW / hp									
LOGAN MCV (KS_) 02/07→											
		166900		92100903	ø 259 x 20.6 x 41	⊖ ABS					
1.5 dCi (KS04)	05/10→	55 / 75		92119203	ø 260 x 22 x 44						
1.5 dCi (KS04)	05/10→	65 / 88									
		167000	Luc	2397301	[–] 23973 17.3	⊕ ABS Ø 260 mm	Luc	91048000	ø 203.2 x 38	Lucas	
1.6 16V Hi-Flex	11/09→	77 / 105	Ate	2467301	[–] 24673 18	⊖ ABS Ø 259 mm	Bos	91060200	ø 203.2 x 38	Bosch	
1.6 Bifuel	11/08→	64 / 87						91069300	ø 228.6 x 42		
1.6 MPI 85	05/10→	62 / 84	Luc	82054900		Ø 260 mm					
			Luc	82508200		⊖ ABS	Ben	97010400		Lucas	
			Luc	82062800		⊕ ABS		97031000		Bosch	
				92100903	ø 259 x 20.6 x 41	⊖ ABS		94023600	ø 180,2 x 53.5		
				92119203	ø 260 x 22 x 44						
				TPM0004							
LOGAN MCV II 12/12→											
		167100	Ate	2570201	[–] 25702 18			91069300	ø 228.6 x 42		
1.2	02/13→	55 / 75		TPM0004			Bos	97010100			
1.2 LPG	02/13→	55 / 75									
1.5 dCi	02/13→	55 / 75									
1.5 dCi	02/13→	66 / 90									
1.5 dCi 100	12/12→	78 / 106									
1.5 dCi 85	12/12→	63 / 85									
1.6 16V	12/12→	60 / 82									
TCe 90	02/13→	66 / 90									
LOGAN Pickup (US_) 03/08→											
		167200	Luc	2397301	[–] 23973 17.3	⊕ ABS Ø 260 mm	Luc	91048000	ø 203.2 x 38	Lucas	
1.4	01/09→	55 / 75	Ate	2467301	[–] 24673 18	⊖ ABS Ø 259 mm	Bos	91060200	ø 203.2 x 38	Bosch	
1.6 Bifuel	05/10→	62 / 84						91069300	ø 228.6 x 42		
1.6 MPI 85	05/10→	62 / 84	Luc	82054900		Ø 260 mm					
			Luc	82508200		⊖ ABS	Ben	97010400		Lucas	
			Luc	82062800		⊕ ABS		97031000		Bosch	
				92100903	ø 259 x 20.6 x 41	⊖ ABS		94023600	ø 180,2 x 53.5		
				92119203	ø 260 x 22 x 44						
				TPM0004							
		167300	Luc	2397301	[–] 23973 17.3	⊕ ABS Ø 260 mm		91069300	ø 228.6 x 42	⊖ ABS	
1.5 dCi	05/10→	55 / 75	Ate	2467301	[–] 24673 18	⊖ ABS Ø 259 mm					
1.5 dCi	05/10→	65 / 88	Luc	82054900		Ø 260 mm					
			Luc	82508200		⊖ ABS					
			Luc	82062800		⊕ ABS					
				92100903	ø 259 x 20.6 x 41	⊖ ABS					
				92119203	ø 260 x 22 x 44						
		167400	Luc	2397301	[–] 23973 17.3	⊕ ABS Ø 260 mm	Luc	91048000	ø 203.2 x 38	Lucas	
1.5 dCi (USOK)	03/08→	50 / 68	Ate	2467301	[–] 24673 18	⊖ ABS Ø 259 mm	Bos	91060200	ø 203.2 x 38	Bosch	
1.5 dCi (USOW)	03/08→	63 / 86						91069300	ø 228.6 x 42		
1.6	03/08→	64 / 87	Luc	82054900		Ø 260 mm					
			Luc	82508200		⊖ ABS	Ben	97010400		Lucas	
			Luc	82062800		⊕ ABS		97031000		Bosch	
				92100903	ø 259 x 20.6 x 41	⊖ ABS	Bos	84069300	bore ø 22 ø 228.6 x 42		
				92119203	ø 260 x 22 x 44			94023600	ø 180,2 x 53.5		
				TPM0004							
LOGAN Pick-up (US_) 03/08→ → LOGAN Pickup (US_), Page 308											

DACIA

DACIA

		kW / hp										
NOVA 04/96→03/03												
		167500	Ben		**2049401**	[+] 20494 14						
1.4	04/96→03/01	48 / 65										
1.6	04/96→03/03	53 / 72										
SANDERO II 10/12→												
		167600	Luc		**2146306**	[–] 21463 18.2	Ø 238 mm Ø 259 mm	Bos		**91053700**	ø 180 x 42	7" -brake
1.2	10/12→	55 / 75										
1.2 LPG	10/12→	55 / 75	Luc		**2146304**	[+] 21463 18.2	Ø 238 mm Ø 259 mm			**97031000**		
1.5 dCi	10/12→	55 / 75		PRO	**92036103**	ø 238 x 12 x 41	Ø 238 mm					
1.5 dCi	10/12→	66 / 90		PRO	**92175103**	ø 259 x 12 x 41.4						
				PRO	**92100903**	ø 259 x 20.6 x 41						
					TPM0004							
		167700	Ate		**2570201**	[–] 25702 18				**97031000**		
1.5 dCi 100	12/12→	78 / 106			**TPM0004**							
1.5 dCi 85	12/12→	63 / 85										
TCe 90	10/12→	66 / 90										
		167800	Ate		**2570201**	[–] 25702 18	⊕ STEPWAY			**97031000**		
1.6 16V	12/12→	60 / 82	Ate		**2573801**	[–] 25738 18	⊖ STEPWAY					
				PRO	**92175103**	ø 259 x 12 x 41.4	⊖ STEPWAY					
					TPM0004							
SANDERO 06/08→												
		167900	Luc		**2146304**	[+] 21463 18.2		Luc		**91048000**	ø 203.2 x 38	8" -brake
1.2 16V	11/08→	55 / 75										
1.2 16V LPG	11/08→	55 / 75	Luc		**82518600**		Ø 259 mm	Bos		**91053700**	ø 180 x 42	7" -brake
1.4 MPI LPG	01/09→	53 / 72										
1.5 dCi	11/08→	50 / 68		PRO	**92175103**	ø 259 x 12 x 41.4				**97031000**		8" Bosch -brake
1.5 dCi	11/08→	63 / 86										
1.5 dCi	05/10→	55 / 75		PRO	**92100903**	ø 259 x 20.6 x 41				**97037900**		8" TRW -brake
1.5 dCi	05/10→	65 / 88										
1.6 16V Bifuel	01/11→	77 / 105			**TPM0004**					**94019700**	ø 203,3 x 50.5	⊖ ABS
1.6 MPI 85	05/10→	62 / 84										
										94023600	ø 180,2 x 53.5	⊖ ABS
		168000	Luc		**2146306**	[–] 21463 18.2	→10/08 Ø 238 mm	Luc		**91048000**	ø 203.2 x 38	8" -brake
1.4	06/08→	55 / 75										
1.6	06/08→	64 / 87	Luc		**2146304**	[+] 21463 18.2	Ø 259 mm	Bos		**91053700**	ø 180 x 42	7" -brake
			Luc		**82518600**		Ø 259 mm			**97031000**		8" Bosch -brake
				PRO	**92036103**	ø 238 x 12 x 41	→10/08			**97037900**		8" TRW -brake
				PRO	**92175103**	ø 259 x 12 x 41.4				**94019700**	ø 203,3 x 50.5	⊖ ABS
				PRO	**92100903**	ø 259 x 20.6 x 41				**94023600**	ø 180,2 x 53.5	⊖ ABS
					TPM0004							
		168100	Luc		**2146304**	[+] 21463 18.2		Bos		**91053700**	ø 180 x 42	7" -brake
1.6 16V	07/11→	77 / 105		PRO	**92175103**	ø 259 x 12 x 41.4				**97031000**		8" -brake
				PRO	**92100903**	ø 259 x 20.6 x 41						
					TPM0004							
SOLENZA 02/03→												
		168200	Luc		**2146304**	[+] 21463 18.2						
1.4	02/03→	55 / 75			**92236100**	ø 235 x 20 x 51						
1.9 D	02/03→	46 / 63										

DAEWOO

DAEWOO

		kW / hp										
AVEO 11/02→04/05												
		168300	Ake		**2397401**	[–] 23974 17.8				**91062500**	ø 200 x 35	
1.5 SE	11/02→04/05	62 / 84	Ake		**2397406**	[+] 23974 17.8				**97033700**		

DAEWOO

DAEWOO

		kW / hp									
AVEO 11/02→04/05											
		168300									
1.5 SE	11/02→04/05	62 / 84	Ake		82508400						
ESPERO (KLEJ) 02/95→09/99											
		168400									
1.5 16V	02/95→06/99	66 / 90	Ate		2186201	[o] 21862 18.3	→05/97			91044900	ø 200 x 45
1.8	02/95→06/99	70 / 95	Ake		2323401	[+] 23234 16.9	05/97→			97033700	
1.8	02/95→09/99	66 / 90	Ake		82508400		05/97→			84044900	bore ø 19 ø 200 x 45
2.0	02/95→06/99	77 / 105	Ate		82028900		→05/97			94008600	ø 200,0 x 52.5
			Ate		82062900		→05/97				
					92102600	ø 256 x 24 x 47	05/97→				
				PRO	92039203	ø 256 x 24 x 41	→05/97				
ESPERO Saloon (KLEJ) 02/95→09/99 → ESPERO (KLEJ), Page 310											
ESPERO Stufenheck (KLEJ) 02/95→09/99 → ESPERO (KLEJ), Page 310											
EVANDA (KLAL) 08/02→											
		168500									
2.0	08/02→	96 / 131	Ake		2323401	[+] 23234 16.9		Sum		2399401	[–] 23994 14.8
			Sum		2406201	[+] 24062 17.6		Sum		82044600	
			Ake		82508400						
					92133500	ø 256 x 24 x 47.5	⊕ ABS				
KALOS (KLAS) 09/02→											
		168600									
1.2	04/03→	53 / 72	Ake		2397401	[–] 23974 17.8				91062500	ø 200 x 35	
1.4	09/02→	61 / 83	Ake		2397406	[+] 23974 17.8				97033700		
1.4 16V	04/03→	69 / 94	Ake		82508400					94032100	ø 200 x 40.5	⊕ ABS
1.5	11/02→12/04	62 / 84			92133400	ø 236 x 20 x 41						
KALOS Saloon (KLAS) 11/02→12/04											
		168700									
1.4	11/02→12/04	61 / 83	Ake		2397401	[–] 23974 17.8				91062500	ø 200 x 35	
1.4	05/03→12/04	69 / 94	Ake		2397406	[+] 23974 17.8				97033700		
1.5	11/02→12/04	62 / 84	Ake		82508400					94032100	ø 200 x 40.5	⊕ ABS
					92133400	ø 236 x 20 x 41						
KALOS Stufenheck (KLAS) 11/02→12/04 → KALOS Saloon (KLAS), Page 310											
KORANDO (KJ) 01/99→											
		168800	Luc		2323101	[+] 23231 15.8	⊕ W.I. mech.	Luc		2323701	[–] 23237 14.5
2.3	01/99→	105 / 143									
2.9 D	01/99→	72 / 98	Luc		2323001	[+] 23230 15.8	⊕ W.I. elec.	Luc		2324201	[+] 23242 14.2
2.9 TD	01/99→	88 / 120			92138400	ø 278 x 24 x 41				92138500	ø 299 x 10.5 x 67.5
3.2 4x4	01/99→	156 / 212								91077600	ø 190 x 25
KORANDO Cabrio (KJ) 02/99→											
		168900	Luc		2323101	[+] 23231 15.8	⊕ W.I. mech.	Luc		2323701	[–] 23237 14.5
2.0 16V	02/99→	94 / 128									
2.3	02/99→	105 / 143	Luc		2323001	[+] 23230 15.8	⊕ W.I. elec.	Luc		2324201	[+] 23242 14.2
2.9 D	02/99→	72 / 98			92138400	ø 278 x 24 x 41				92138500	ø 299 x 10.5 x 67.5
2.9 TD	02/99→	88 / 120								91077600	ø 190 x 25
LACETTI Hatchback (KLAN) 02/04→											
		169000	Ake		2323401	[+] 23234 16.9		Sum		2407101	[–] 24071 14.6
1.4	02/04→	70 / 95									
1.6	02/04→	80 / 109	Ake		82508400					82502300	
1.8	02/04→	90 / 122			92133600	ø 256 x 24 x 47.2				92163000	ø 258 x 10.6 x 57.5
LACETTI Saloon (J200) 08/03→12/04											
		169100	Ake		2323401	[+] 23234 16.9		Sum		2407101	[–] 24071 14.6
1.8 CDX	08/03→12/04	90 / 122									
1.8 CDX (J200)	08/03→12/04	67 / 91									

→

		kW / hp											
LACETTI Saloon (J200) 08/03→12/04													
		169100	Ake		**82508400**					**82502300**			
1.8 CDX	08/03→12/04	90 / 122											
1.8 CDX (J200)	08/03→12/04	67 / 91			**92133600**	ø 256 x 24 x 47.2				**92163000**	ø 258 x 10.6 x 57.5		
LACETTI Saloon 06/99→07/03													
		169200	Ake		**2323401**	[+] 23234 16.9		Sum		**2407101**	[–] 24071 14.6		
1.6	06/99→07/03	78 / 106	Ake		**82508400**					**82502300**			
					92133600	ø 256 x 24 x 47.2				**92163000**	ø 258 x 10.6 x 57.5		
LACETTI Schrägheck (KLAN) 02/04→ → LACETTI Hatchback (KLAN), Page 310													
LACETTI Stufenheck (J200) 08/03→12/04 → LACETTI Saloon (J200), Page 310													
LACETTI Stufenheck 06/99→07/03 → LACETTI Saloon, Page 311													
LANOS / SENS (KLAT) 05/97→06/99 → LANOS (KLAT), Page 311													
LANOS (KLAT) 05/97→06/99													
		169300	Ake		**2324102**	[–] 23241 16.5	447434→			**91044900**	ø 200 x 45		
1.4	05/97→	55 / 75	Ate		**2054701**	[o] 20547 16.8	→447433			**97033700**			
1.5	05/97→	63 / 86			**82061500**		447434→			**84044900**	bore ø 19 ø 200 x 45	447434→	
			Ate		**82028900**		→447433			**84044901**	bore ø 17.5 ø 200 x 45	→447433	
			Ate		**82062900**		→447433			**94008600**	ø 200,0 x 52.5	⊕ ABS	
				PRO	**92029603**	ø 236 x 20 x 41							
		169400	Ake		**2324102**	[–] 23241 16.5	447434→			**91044900**	ø 200 x 45		
1.5	10/97→06/99	73 / 99	Ate		**2054701**	[o] 20547 16.8	→447433			**97033700**			
					82061500		447434→			**84044900**	bore ø 19 ø 200 x 45	447434→	
			Ate		**82028900**		→447433			**94008600**	ø 200,0 x 52.5	⊕ ABS	
				PRO	**92029603**	ø 236 x 20 x 41							
		169500	Ate		**2186201**	[o] 21862 18.3	→447433			**91044900**	ø 200 x 45		
1.6 16V	05/97→	78 / 106	Ake		**2323401**	[+] 23234 16.9	447434→			**97033700**			
			Ake		**82508400**		447434→			**84044902**	bore ø 20.6 ø 200 x 46	447434→	
			Ate		**82028900**		→447433	Luc		**84044903**	bore ø 17.5 ø 200 x 45	447434→	
			Ate		**82062900**		→447433			**94008600**	ø 200,0 x 52.5	⊕ ABS	
				PRO	**92039203**	ø 256 x 24 x 41							
LANOS Saloon (KLAT) 05/97→06/99													
		169600	Ake		**2324102**	[–] 23241 16.5	447434→			**91044900**	ø 200 x 45		
1.4	05/97→	55 / 75	Ate		**2054701**	[o] 20547 16.8	→447433			**97033700**			
1.5	05/97→	63 / 86			**82061500**		447434→			**84044900**	bore ø 19 ø 200 x 45	447434→	
			Ate		**82028900**		→447433			**84044901**	bore ø 17.5 ø 200 x 45	→447433	
			Ate		**82062900**		→447433			**94008600**	ø 200,0 x 52.5	⊕ ABS	
				PRO	**92029603**	ø 236 x 20 x 41							
		169700	Ake		**2324102**	[–] 23241 16.5	447434→			**91044900**	ø 200 x 45		
1.5	10/97→06/99	73 / 99	Ate		**2054701**	[o] 20547 16.8	→447433			**97033700**			
					82061500		447434→			**84044900**	bore ø 19 ø 200 x 45	447434→	
			Ate		**82028900**		→447433			**94008600**	ø 200,0 x 52.5	⊕ ABS	
				PRO	**92029603**	ø 236 x 20 x 41							
		169800	Ate		**2186201**	[o] 21862 18.3	→447433			**91044900**	ø 200 x 45		
1.6 16V	05/97→	78 / 106	Ake		**2323401**	[+] 23234 16.9	447434→			**97033700**			

DAEWOO

DAEWOO

		kW / hp											
LANOS Saloon (KLAT) 05/97→06/99													
169800			Ake		82508400		447434→			84044902	bore ø 20.6 ø 200 x 46	447434→
1.6 16V	05/97→	78 / 106	Ate		82028900		→447433	Luc		84044903	bore ø 17.5 ø 200 x 45	447434→
			Ate		82062900		→447433			94008600	ø 200,0 x 52.5	⊕ ABS
				PRO	92039203	ø 256 x 24 x 41						
LANOS Stufenheck (KLAT) 05/97→06/99 → LANOS Saloon (KLAT), Page 311													
LEGANZA (KLAV) 06/97→04/04													
169900			Ake		2323401	[+] 23234 16.9		Luc		2323701	[–] 23237 14.5	
2.0 16V	06/97→12/02	98 / 133										
2.0 16V	07/00→04/04	93 / 126	Sum		2406201	[+] 24062 17.6	Sumitomo			92128900	ø 258 x 10 x 64.6	
2.2 16V	04/99→12/02	100 / 136	Ake		82508400							
					92155600	ø 256 x 24 x 46.8						
LEGANZA Saloon (KLAV) 06/97→04/04 → LEGANZA (KLAV), Page 312													
LEGANZA Stufenheck (KLAV) 06/97→04/04 → LEGANZA (KLAV), Page 312													
LUBLIN II Box 04/97→													
170000			Gir		2138802	[+] 21388 18.3						
2.4 D (3302)	04/97→	52 / 71										
2.4 TD (3304)	04/97→	66 / 90										
LUBLIN II Kasten 04/97→ → LUBLIN II Box, Page 312													
LUBLIN II Platform/Chassis 04/97→													
170100			Gir		2138802	[+] 21388 18.3						
2.4 D (3352)	04/97→	52 / 71										
2.4 TD (3354)	04/97→	66 / 90										
LUBLIN II Pritsche/Fahrgestell 04/97→ → LUBLIN II Platform/Chassis, Page 312													
MAGNUS 07/99→													
170200			Sum		2406201	[+] 24062 17.6		Sum		2399401	[–] 23994 14.8	
2.0	07/99→	96 / 131										
2.5	08/03→12/04	115 / 156			92133500	ø 256 x 24 x 47.5		Sum		82044600		
MATIZ (KLYA) 09/98→													
170300			Ake		2324102	[–] 23241 16.5				91054000	ø 180 x 31	
0.8	09/98→	38 / 52			82061500					97015600		
1.0	01/03→	47 / 64			92100300	ø 236 x 12.5 x 35.5				83054000	bore ø 17.5 ø 180 x 31	
								Luc		84054000	bore ø 17.5 ø 180 x 31	
										94026200	ø 180 x 40	→12/04
MATIZ Box (KLA4) 08/98→													
170400			Ake		2324102	[–] 23241 16.5				91054000	ø 180 x 31	
0.8	08/98→	38 / 52			82061500					97015600		
					92100300	ø 236 x 12.5 x 35.5				83054000	bore ø 17.5 ø 180 x 31	
								Luc		84054000	bore ø 17.5 ø 180 x 31	
										94026200	ø 180 x 40	→12/04
MATIZ Kasten (KLA4) 08/98→ → MATIZ Box (KLA4), Page 312													
MUSSO (FJ) 01/99→													
170500			Luc		2323101	[+] 23231 15.8	⊕ W.I. mech.	Luc		2323701	[–] 23237 14.5	
2.2 TD	09/99→	74 / 101										
2.3	01/99→	103 / 140	Luc		2323001	[+] 23230 15.8	⊕ W.I. elec.	Luc		2324201	[+] 23242 14.2	
2.9 D 4x4	01/99→09/99	73 / 99										
2.9 TD 4x4	01/99→	88 / 120			92138400	ø 278 x 24 x 41		Ake		2405001	[+] 24050 15.2	
3.2 4x4	01/99→	162 / 220								92138500	ø 299 x 10.5 x 67.5	
										91077600	ø 190 x 25	
NUBIRA (KLAJ) 05/97→07/03													
170600			Ake		2323401	[+] 23234 16.9		Luc		2323701	[–] 23237 14.5	⊕ rear disc brake Lucas
1.6	08/02→07/03	76 / 103										
2.0 CDX	08/02→07/03	93 / 126	Ake		82508400			Sum		2407101	[–] 24071 14.6	⊕ rear disc brake Sumitomo

→

30 kW / hp

NUBIRA (KLAJ) 05/97→07/03

1.6	08/02→07/03	170600 76 / 103			92102600	ø 256 x 24 x 47			82502300		⊕ rear disc brake Sumitomo
2.0 CDX	08/02→07/03	93 / 126							91044900	ø 200 x 45	⊕ rear drum brake
									97033700		⊕ rear drum brake
									92129000	ø 258 x 10 x 64.5	⊕ rear disc brake
									94008600	ø 200,0 x 52.5	⊕ rear drum brake
1.6 16V	05/97→	170700 78 / 106	Ake		2323401	[+] 23234 16.9		Luc	2323701	[–] 23237 14.5	⊕ rear disc brake Lucas
			Ake		82508400			Sum	2407101	[–] 24071 14.6	⊕ rear disc brake Sumitomo
					92102600	ø 256 x 24 x 47			82502300		⊕ rear disc brake Sumitomo
									91044900	ø 200 x 45	⊕ rear drum brake
									97033700		⊕ rear drum brake
								Luc	84044903	bore ø 17.5 ø 200 x 45	⊕ rear drum brake
									92129000	ø 258 x 10 x 64.5	⊕ rear disc brake
									94008600	ø 200,0 x 52.5	⊕ rear drum brake
2.0 16V	05/97→	170800 98 / 133	Ake		2323401	[+] 23234 16.9		Luc	2323701	[–] 23237 14.5	⊕ rear disc brake Lucas
			Ake		82508400			Sum	2407101	[–] 24071 14.6	⊕ rear disc brake Sumitomo
					92102600	ø 256 x 24 x 47			82502300		⊕ rear disc brake Sumitomo
									91044900	ø 200 x 45	⊕ rear drum brake
									97033700		⊕ rear drum brake
								Luc	84044903	bore ø 17.5 ø 200 x 45	
									92129000	ø 258 x 10 x 64.5	⊕ rear disc brake
									94008600	ø 200,0 x 52.5	⊕ rear drum brake

NUBIRA Break (KLAJ) 05/97→ → NUBIRA Wagon (KLAJ), Page 314

NUBIRA Break (KLAN) 07/03→ → NUBIRA Wagon (KLAN), Page 315

NUBIRA Saloon (KLAJ) 05/97→

1.5 SE	06/99→07/03	170900 81 / 110	Ake		2323401	[+] 23234 16.9		Luc	2323701	[–] 23237 14.5	⊕ rear disc brake Lucas
2.0	06/99→07/03	81 / 110	Ake		82508400			Sum	2407101	[–] 24071 14.6	⊕ rear disc brake Sumitomo
2.0 16V	12/00→	93 / 126			92102600	ø 256 x 24 x 47			82502300		⊕ rear disc brake Sumitomo
									91044900	ø 200 x 45	⊕ rear drum brake
									97033700		⊕ rear drum brake
									84044902	bore ø 20.6 ø 200 x 46	
									92129000	ø 258 x 10 x 64.5	⊕ rear disc brake
									94008600	ø 200,0 x 52.5	⊕ rear drum brake
1.6 16V	05/97→	171000 78 / 106	Ake		2323401	[+] 23234 16.9		Luc	2323701	[–] 23237 14.5	⊕ rear disc brake Lucas
1.6 16V	07/00→	76 / 103	Ake		82508400			Sum	2407101	[–] 24071 14.6	⊕ rear disc brake Sumitomo
2.0 16V	05/97→	98 / 133			92102600	ø 256 x 24 x 47			82502300		⊕ rear disc brake Sumitomo
									91044900	ø 200 x 45	⊕ rear drum brake
									97033700		⊕ rear drum brake
									84044902	bore ø 20.6 ø 200 x 46	→12/00
								Luc	84044903	bore ø 17.5 ø 200 x 45	01/01→
									92129000	ø 258 x 10 x 64.5	⊕ rear disc brake
									94008600	ø 200,0 x 52.5	⊕ rear drum brake

DAEWOO DAEWOO

30 kW / hp

NUBIRA Saloon (KLAN) 07/03→

1.4	10/03→12/04	171100 69 / 94	Ake		2323401	[+] 23234 16.9		Sum		2407101	[–] 24071 14.6	⊕ rear disc brake
1.8	07/03→	90 / 122	Ake		82508400					82502300		⊕ rear disc brake Sumitomo
					92133600	ø 256 x 24 x 47.2				91044900	ø 200 x 45	⊕ rear drum brake
										97033700		⊕ rear drum brake
										92163000	ø 258 x 10.6 x 57.5	⊕ rear disc brake
										94008600	ø 200,0 x 52.5	⊕ rear drum brake
										91071000	ø 170 x 26	⊕ rear disc brake
1.6	07/03→	171200 80 / 109	Ake		2323401	[+] 23234 16.9		Sum		2407101	[–] 24071 14.6	⊕ rear disc brake
			Ake		82508400					82502300		⊕ rear disc brake Sumitomo
					92133600	ø 256 x 24 x 47.2				91044900	ø 200 x 45	⊕ rear drum brake
										97033700		⊕ rear drum brake
								Luc		84044903	bore ø 17.5 ø 200 x 45	
										92163000	ø 258 x 10.6 x 57.5	⊕ rear disc brake
										94008600	ø 200,0 x 52.5	⊕ rear drum brake
										91071000	ø 170 x 26	⊕ rear disc brake

NUBIRA Stufenheck (KLAJ) 05/97→ → NUBIRA Saloon (KLAJ), Page 313

NUBIRA Stufenheck (KLAN) 07/03→ → NUBIRA Saloon (KLAN), Page 314

NUBIRA Wagon (KLAJ) 05/97→

1.6 16V	05/97→	171300 78 / 106	Ake		2323401	[+] 23234 16.9		Luc		2323701	[–] 23237 14.5	⊕ rear disc brake Lucas
1.6 16V	06/97→	66 / 90	Ake		82508400			Sum		2407101	[–] 24071 14.6	⊕ rear disc brake Sumitomo
2.0 16V	05/97→	98 / 133			92102600	ø 256 x 24 x 47				82502300		⊕ rear disc brake Sumitomo
										91044900	ø 200 x 45	⊕ rear drum brake
										97033700		⊕ rear drum brake
										84044902	bore ø 20.6 ø 200 x 46	→12/00
								Luc		84044903	bore ø 17.5 ø 200 x 45	01/01→
										92129000	ø 258 x 10 x 64.5	⊕ rear disc brake
										94008600	ø 200,0 x 52.5	⊕ rear drum brake
1.6 16V	12/00→	171400 76 / 103	Ake		2323401	[+] 23234 16.9		Luc		2323701	[–] 23237 14.5	⊕ rear disc brake Lucas
			Ake		82508400			Sum		2407101	[–] 24071 14.6	⊕ rear disc brake Sumitomo
					92102600	ø 256 x 24 x 47				82502300		⊕ rear disc brake Sumitomo
										91044900	ø 200 x 45	⊕ rear drum brake
										97033700		⊕ rear drum brake
								Luc		84044903	bore ø 17.5 ø 200 x 45	
										92129000	ø 258 x 10 x 64.5	⊕ rear disc brake
										94008600	ø 200,0 x 52.5	⊕ rear drum brake
2.0 16V	12/00→	171500 93 / 126	Ake		2323401	[+] 23234 16.9		Luc		2323701	[–] 23237 14.5	⊕ rear disc brake Lucas
			Ake		82508400			Sum		2407101	[–] 24071 14.6	⊕ rear disc brake Sumitomo
					92102600	ø 256 x 24 x 47				82502300		⊕ rear disc brake Sumitomo
										91044900	ø 200 x 45	⊕ rear drum brake
										97033700		⊕ rear drum brake
										84044902	bore ø 20.6 ø 200 x 46	

		30 kW / hp									
NUBIRA Wagon (KLAJ) 05/97→											
2.0 16V	12/00→	171500 93 / 126							92129000	ø 258 x 10 x 64.5	⊕ rear disc brake
									94008600	ø 200,0 x 52.5	⊕ rear drum brake
NUBIRA Wagon (KLAN) 07/03→											
1.6	07/03→	171600 80 / 109	Ake		2323401	[+] 23234 16.9		Luc	2323701	[–] 23237 14.5	⊕ rear disc brake Lucas
			Ake		82508400			Sum	2407101	[–] 24071 14.6	⊕ rear disc brake Sumitomo
					92133600	ø 256 x 24 x 47.2			82502300		⊕ rear disc brake Sumitomo
									91044900	ø 200 x 45	⊕ rear drum brake
									97033700		⊕ rear drum brake
								Luc	84044903	bore ø 17.5 ø 200 x 45	
									92129000	ø 258 x 10 x 64.5	⊕ rear disc brake
									92163000	ø 258 x 10.6 x 57.5	
									94008600	ø 200,0 x 52.5	⊕ rear drum brake
1.8	07/03→	171700 90 / 122	Ake		2323401	[+] 23234 16.9		Luc	2323701	[–] 23237 14.5	⊕ rear disc brake Lucas
			Ake		82508400			Sum	2407101	[–] 24071 14.6	⊕ rear disc brake Sumitomo
					92133600	ø 256 x 24 x 47.2			82502300		⊕ rear disc brake Sumitomo
									91044900	ø 200 x 45	⊕ rear drum brake
									97033700		⊕ rear drum brake
									92129000	ø 258 x 10 x 64.5	⊕ rear disc brake
									92163000	ø 258 x 10.6 x 57.5	
									94008600	ø 200,0 x 52.5	⊕ rear drum brake
1.8	06/04→	171800 70 / 95	Ake		82508400				82502300		⊕ rear disc brake Sumitomo
					92133600	ø 256 x 24 x 47.2			92129000	ø 258 x 10 x 64.5	⊕ rear disc brake
REXTON (GAB_) 04/02→											
2.3 RX230 4x4	05/02→	171900 110 / 150	Sum		2172502	[+] 21725 15.6	cal. (1 pist.)	Luc	2324201	[+] 23242 14.2	
			Man		2356901	[+] 23569 17	cal. (2 pist.)	San	2367301	[+] 23673 15	
			Man		82072100			Luc	91015700	ø 254 x 56	⊖ ABS
					92162600	ø 294 x 26 x 32.6	⊕ ABS 01/04→		92138500	ø 299 x 10.5 x 67.5	
				PRO	92203203	ø 294 x 28 x 56.5	⊕ ABS →12/03				
				PRO	92229003	ø 294 x 26 x 55.3	⊖ ABS 01/04→				
2.7 D All-wheel Drive	05/06→	172000 137 / 186	Sum		2172502	[+] 21725 15.6	cal. (1 pist.)	Luc	2324201	[+] 23242 14.2	
			Man		2356901	[+] 23569 17	cal. (2 pist.)	San	2367301	[+] 23673 15	
			Man		82072100			Luc	91015700	ø 254 x 56	⊖ ABS
					92162600	ø 294 x 26 x 32.6	⊖ ABS		92138500	ø 299 x 10.5 x 67.5	
									91077600	ø 190 x 25	
2.8 RX280 4x4	03/03→	172100 142 / 193	Sum		2172502	[+] 21725 15.6	cal. (1 pist.)	Luc	2324201	[+] 23242 14.2	
			Man		2356901	[+] 23569 17	cal. (2 pist.)	San	2367301	[+] 23673 15	
			Man		82072100				92138500	ø 299 x 10.5 x 67.5	
2.9 TD	04/02→	172200 88 / 120	Sum		2172502	[+] 21725 15.6	cal. (1 pist.)	Luc	2324201	[+] 23242 14.2	
			Man		2356901	[+] 23569 17	cal. (2 pist.)	San	2367301	[+] 23673 15	
			Man		82072100			Luc	91015700	ø 254 x 56	⊖ ABS

DAEWOO

DAEWOO

		kW / hp									
REXTON (GAB_) 04/02→											
172200				92138400	ø 278 x 24 x 41			92138500	ø 299 x 10.5 x 67.5	
2.9 TD	04/02→	88 / 120		92162600	ø 294 x 26 x 32.6	⊕ ABS 01/04→				
			PRO	92203203	ø 294 x 28 x 56.5	⊕ ABS →12/03				
			PRO	92229003	ø 294 x 26 x 55.3	⊖ ABS 01/04→				
172300			Sum	2172502	[+] 21725 15.6	cal. (1 pist.)	Luc	2324201	[+] 23242 14.2	
3.2 V6	04/02→	162 / 220	Man	2356901	[+] 23569 17	cal. (2 pist.)	San	2367301	[+] 23673 15	
			Man	82072100			Luc	91015700	ø 254 x 56	⊕ ABS
				92162600	ø 294 x 26 x 32.6	⊕ ABS 01/04→		92138500	ø 299 x 10.5 x 67.5	
			PRO	92203203	ø 294 x 28 x 56.5	⊕ ABS →12/03		91077600	ø 190 x 25	
			PRO	92229003	ø 294 x 26 x 55.3	⊖ ABS 01/04→				
REZZO (KLAU) 09/00→										
172400			Ake	2323401	[+] 23234 16.9			91072000	ø 230 x 52	
1.6	09/00→	77 / 105								
1.6 SX	08/01→12/04	66 / 90								
1.8	09/00→	67 / 91	Ake	82508400				97033200		
1.8	09/00→	72 / 98								
1.8	09/00→	74 / 101								
2.0	09/00→	94 / 128								
2.0	09/01→	89 / 121		92133500	ø 256 x 24 x 47.5					
TACUMA (KLAU, U100) 09/00→ → REZZO (KLAU), Page 316										
TACUMA (KLAU) 09/00→ → REZZO (KLAU), Page 316										
TICO (KLY3) 02/95→12/00										
172500			Sum	2306101	[–] 23061 14			91054200	ø 180 x 31	
0.8	02/95→12/00	35 / 48								
0.8	01/96→12/00	38 / 52		92043800	ø 215 x 10 x 33					
TOSCA 02/06→										
172600			Sum	2406201	[+] 24062 17.6		Sum	2399401	[–] 23994 14.8	
1.8	02/06→	90 / 122								
2.0 TDCi	02/06→	110 / 150								
2.0 XT	02/06→	105 / 143		92133500	ø 256 x 24 x 47.5		Sum	82044600		
2.5 Executive	02/06→	115 / 156								
WINSTORM 12/06→										
172700			Man	2451001	[+] 24510 16.9		Man	2449801	[+] 24498 15.4	
2.4	12/06→	104 / 141								
2.4 4x4	12/06→	104 / 141								
2.4 LS	12/06→	103 / 140	Man	82077300			Man	82077200		
2.4 LT 4x4	12/06→	103 / 140								
3.2 Executive 4x4	12/06→	167 / 227						91067100	ø 188.4 x 26	
								97038500		

DAIHATSU

DAIHATSU

		kW / hp								
APPLAUSE II (A101) 07/97→05/00										
172800				92076900	ø 234 x 18 x 47		Ake	82051600		
1.6 16V (A101)	07/97→05/00	73 / 99						91039001	ø 200 x 32	⊕ rear drum brake
								97016400		⊕ rear drum brake
								94032700	ø 200 x 40.5	⊕ rear drum brake
APPLAUSE II Saloon (A101) 07/97→05/00 → APPLAUSE II (A101), Page 316										
APPLAUSE II Stufenheck (A101) 07/97→05/00 → APPLAUSE II (A101), Page 316										
APPLAUSE Mk II (A101) 07/97→05/00 → APPLAUSE II (A101), Page 316										
Atrai Bus (S22_, S23_) 07/00→ → EXTOL Bus (S22_, S23_), Page 318										
Atrai автобус (S22_, S23_) 07/00→ → EXTOL Bus (S22_, S23_), Page 318										
BEGO (J2_) 11/05→ → TERIOS (J2_), Page 321										
BEGO 11/05→										
172900			Sum	2165001	[+] 21650 15			91068600	ø 228.6 x 41.5	
1.3 DVVT	11/05→	63 / 86								
1.3 DVVT 4x4	11/05→	63 / 86								
1.5 DVVT 4x4	11/05→	77 / 105		92138200	ø 273 x 16 x 37.5			94034300	ø 228,6 x 54	
1.5 VVT-i [RWD]	11/05→	77 / 105								

		kW / hp											
BOON (M3_) 01/05→10/08 → SIRION (M3_), Page 319													
CHARADE (L2_) 03/03→													
173000			Sum		**2350701**	[+] 23507 15	⊕ ABS			**91065500**	ø 165 x 26	
1.0	03/03→	51 / 69	Ake		**2422901**	[+] 24229 15.3	⊖ ABS			**94033900**	ø 165 x 33.5	⊖ ABS
1.0 (L251S)	03/03→	43 / 58			**82510300**							
					92129100	ø 234 x 16 x 41	⊕ ABS					
CHARADE IV (G200, G202) 01/93→09/00													
173100			Ake		**2195202**	[+] 21952 15.6		Ake		**2000801**	[–] 20008 13	⊕ rear disc brake
1.3	09/96→11/99	44 / 60			**82506200**					**91038900**	ø 180 x 27	⊕ rear drum brake
1.3 16V	05/96→11/99	55 / 75			**92076900**	ø 234 x 18 x 47				**97007300**		⊕ rear disc brake
1.3 i 16V	01/93→09/00	62 / 84							PRO	**92169803**	ø 231.5 x 9 x 36.9	⊕ rear disc brake
1.5 i 16V	01/97→11/99	66 / 90								**94022900**	ø 180,0 x 36	⊕ rear drum brake
1.6 GTi	03/93→11/99	77 / 105										
CHARADE IV Saloon (G203) 08/94→													
173200			Ake		**2195202**	[+] 21952 15.6		Ake		**2000801**	[–] 20008 13	⊕ rear disc brake
1.0	10/99→10/02	72 / 98			**82506200**			Ake		**82051600**		
1.5 16V	10/94→	55 / 75			**92076900**	ø 234 x 18 x 47				**91038900**	ø 180 x 27	⊕ rear drum brake
1.5 i 16V	08/94→	66 / 90								**97007300**		⊕ rear disc brake
									PRO	**92169803**	ø 231.5 x 9 x 36.9	⊕ rear disc brake
										94022900	ø 180,0 x 36	⊕ rear drum brake
CHARADE IV Stufenheck (G203) 08/94→ → CHARADE IV Saloon (G203), Page 317													
CHARADE 05/11→													
173300			Ake		**2434701**	[–] 24347 18.6	⊕ J-made ⊖ ABS	Ate		**2457401**	[+] 24574 15	⊕ F-made ⊕ ABS
1.33 16V	05/11→	73 / 99	Adv		**2470801**	[–] 24708 17.6	⊕ J-made	Ate		**82029300**		⊕ F-made ⊕ ABS
			Ate		**2402201**	[+] 24022 17.7	⊕ F-made			**91053500**	ø 200 x 32	⊕ J-made ⊖ ABS
			Ate		**82029200**		⊕ F-made	Lkh		**91075000**	ø 203 x 39	⊕ F-made ⊖ ABS
			Ate		**82503500**		⊕ F-made			**92156300**	ø 259 x 9 x 30.3	⊕ J-made ⊕ ABS
					92156100	ø 255 x 22 x 46.3	⊕ J-made ⊖ ABS			**92161900**	ø 278 x 9 x 25	⊕ F
					92156200	ø 275 x 22 x 46.3	⊕ J-made ⊕ ABS			**94036100**	ø 200,0 x 43.7	⊕ J-made ⊖ ABS
					92164200	ø 258 x 22 x 46.2	⊕ F					
CHARADE Mk IV (G200, G202) 01/93→09/00 → CHARADE IV (G200, G202), Page 317													
CHARADE Mk IV Saloon (G203) 08/94→ → CHARADE IV Saloon (G203), Page 317													
CHARADE Mk IV Stufenheck (G203) 08/94→ → CHARADE IV Saloon (G203), Page 317													
COO 10/06→													
173400			Sum		**2350701**	[+] 23507 15						
1.0	10/06→	40 / 54										
1.0	10/06→	43 / 58										
1.3	10/06→	67 / 91										
1.3 Turbo	10/06→	95 / 129										
1.5	10/06→	76 / 103										
1.5 4x4	10/06→	76 / 103										
COPEN 09/03→													
173500			Sum		**2350701**	[+] 23507 15				**91059700**	ø 180 x 38	
0.7	09/03→	47 / 64	Sum		**82076700**							
0.7 (L880)	09/03→	50 / 68			**92165600**	ø 246 x 17 x 41.9						
1.3	03/06→	64 / 87										
CUORE VI (L7_) 10/98→05/03													
173600			Sum		**2349402**	[+] 23494 14				**91057500**	ø 180 x 31	⊕ ABS
0.7	10/98→09/00	31 / 42	Sum		**82506300**					**91059300**	ø 180 x 28	⊖ ABS
1.0	11/98→09/00	40 / 54			**92103700**	ø 211 x 11 x 41.2						
1.0 DVVT	10/00→02/03	43 / 58										
1.0 i (L701)	10/98→05/03	41 / 56										

DAIHATSU

DAIHATSU

		kW / hp										
CUORE VII (L251) 03/03→												
		173700	Sum		**2350701**	[+] 23507 15	vented disc Ø 234 mm			**91065500**	ø 165 x 26	
0.7	03/03→	35 / 48										
0.7	03/03→	43 / 58	Ake		**2422901**	[+] 24229 15.3	solid disc Ø 211 mm			**94033900**	ø 165 x 33.5	
0.7	03/03→	47 / 64										
0.7 All-wheel Drive	03/03→	43 / 58			**82510300**		solid disc Ø 211 mm					
0.7 Turbo Avy All-wheel Drive	03/03→	47 / 64			**92103700**	ø 211 x 11 x 41.2						
1.0	05/03→	43 / 58			**92129100**	ø 234 x 16 x 41						
CUORE VIII 04/07→												
		173800	Sum		**2350701**	[+] 23507 15	⊕ rim size 14" Ø 246 mm			**91065500**	ø 165 x 26	⊕ ESP
1.0	04/07→	51 / 70										
			Ake		**2422901**	[+] 24229 15.3	⊕ rim size 13" Ø 211 mm			**97032600**		⊕ ESP
					82510300		⊕ rim size 13" Ø 211 mm			**94036400**	ø 180,0 x 33.5	⊕ ESP
					92103700	ø 211 x 11 x 41.2	⊕ rim size 13"					
					92165600	ø 246 x 17 x 41.9	⊕ rim size 14"					
CUORE Mk VI (L7_) 10/98→05/03 → CUORE VI (L7_), Page 317												
EXTOL Bus (S22_, S23_) 07/00→												
		173900	Sum		**2165001**	[+] 21650 15						
1.3	07/00→	63 / 86	Sum		**82031200**							
FEROZA Hard Top (F300) 10/88→12/99												
		174000	Ake		**2171201**	[–] 21712 14	→08/90			**91039400**	ø 254 x 46	
1.6 16V	10/88→12/99	63 / 86										
1.6 i 16V 4x4	10/88→12/99	70 / 95	Ake		**82047200**							
					92114100	ø 277 x 12.5 x 29.5						
					92114200	ø 277 x 18 x 32.5						
FEROZA Soft Top (F300) 10/88→12/99												
		174100	Ake		**2171201**	[–] 21712 14	→08/90			**91039400**	ø 254 x 46	
1.6 16V	10/88→12/99	63 / 86										
1.6 i 16V	10/88→12/99	70 / 95	Ake		**82047200**							
					92114100	ø 277 x 12.5 x 29.5						
					92114200	ø 277 x 18 x 32.5						
FOURTRAK (F7, F8) 07/96→12/99 → ROCKY Soft Top (F7, F8), Page 319												
FOURTRAK 07/96→12/99 → RUGGER, Page 319												
GRAN MOVE (G3) 05/98→												
		174200	Ake		**2195202**	[+] 21952 15.6		Ake		**2000801**	[–] 20008 13	⊕ ABS
1.6	07/98→07/02	70 / 95										
1.6 16V (G301)	05/98→	67 / 91			**82506200**			Ake		**82051600**		⊕ ABS
1.6 GLX	06/98→07/02	77 / 105										
1.6 GX	06/98→07/02	67 / 91		PRO	**92184603**	ø 250 x 18 x 47			PRO	**92169803**	ø 231.5 x 9 x 36.9	⊕ ABS
										94032700	ø 200 x 40.5	⊖ ABS
HIJET Box (S85) 03/98→												
		174300	Sum		**2078001**	[–] 20780 13.4						
1.3 i 16V	05/98→	48 / 65										
1.4 D	03/98→	28 / 38			**92112600**	ø 210 x 16 x 37						
HIJET Kasten (S85) 03/98→ → HIJET Box (S85), Page 318												
HIJET Pickup 04/98→												
		174400	Sum		**2078001**	[–] 20780 13.4						
1.3	06/98→	48 / 65										
1.4 D	04/98→12/99	28 / 38			**92112600**	ø 210 x 16 x 37						
HIJET Pick-up 04/98→ → HIJET Pickup, Page 318												
MATERIA (M4_) 10/06→												
		174500	Luc		**2428303**	[+] 24283 16.5						
1.0	10/06→	40 / 54										
1.0 DVVT	10/06→	43 / 58	Luc		**82512900**							
1.3 DVVT Turbo	10/06→	95 / 129										

		kW / hp										
MATERIA (M4_) 10/06→												
		174600	Luc		**2428303**	[+] 24283 16.5				**91067900**	ø 180 x 28	
1.3	10/06→	67 / 91										
1.5	10/06→	76 / 103	Luc		**82512900**					**97032600**		
1.5 ECO 4WD	10/06→	76 / 103		PRO	**92204503**	ø 254 x 22 x 42				**94036400**	ø 180,0 x 33.5	
MIRA VI (L7_) 10/98→05/03 → CUORE VI (L7_), Page 317												
MOVE (L6, L9) 10/96→												
		174700	Ake		**2378301**	[–] 23783 13.8				**91038800**	ø 165 x 26	
0.8	10/96→	31 / 42			**82506200**					**91060700**	ø 165 x 28	
					92114000	ø 234 x 16 x 36						
		174800	Sum		**2078001**	[–] 20780 13.4				**91038800**	ø 165 x 26	
1.0 i	10/98→	41 / 55			**92129100**	ø 234 x 16 x 41				**91059300**	ø 180 x 28	
										91060700	ø 165 x 28	
								Ben		**97033900**		
PYZAR (G3) 05/98→ → GRAN MOVE (G3), Page 318												
ROCKY Soft Top (F7, F8) 07/96→12/99												
		174900	Ake		**2171201**	[–] 21712 14	⊕ pick-up			**91039400**	ø 254 x 46	
2.8 TD	07/96→12/99	72 / 98	Ake		**2196701**	[+] 21967 13.8						
			Ake		**82047200**							
					92114100	ø 277 x 12.5 x 29.5						
					92114200	ø 277 x 18 x 32.5						
RUGGER 07/96→12/99												
		175000	Ake		**2171201**	[–] 21712 14						
2.8 TDiC 4x4	07/96→12/99	72 / 98										
RUSH 11/05→												
		175100	Sum		**2165001**	[+] 21650 15				**91068600**	ø 228.6 x 41.5	
1.3	11/05→	63 / 86										
1.5	11/05→	77 / 105			**92138200**	ø 273 x 16 x 37.5						
1.5 4x4	11/05→	77 / 105										
SIRION (M1) 04/98→03/05												
		175200	Ake		**2349701**	[+] 23497 15.5				**91057500**	ø 180 x 31	
0.7 Turbo 4WD	09/98→01/05	88 / 120										
1.0	04/98→10/00	40 / 54			**82510300**							
1.0 i (M100)	04/98→09/00	41 / 56			**92129100**	ø 234 x 16 x 41						
		175300	Ake		**2349701**	[+] 23497 15.5				**91038800**	ø 165 x 26	
1.0 i	09/00→01/05	43 / 58										
1.3 Sport	08/00→01/05	75 / 102			**82510300**					**91057500**	ø 180 x 31	
					92129100	ø 234 x 16 x 41						
		175400	Ake		**2349701**	[+] 23497 15.5				**91065600**	ø 180 x 31	
1.0 i 4WD	04/99→09/00	41 / 56										
					82510300							
					92129100	ø 234 x 16 x 41						
		175500	Ake		**2349701**	[+] 23497 15.5				**91038800**	ø 165 x 26	
1.0 i 4WD	09/00→01/05	43 / 58										
1.3 Sport 4WD	08/00→03/05	75 / 102			**82510300**					**91065600**	ø 180 x 31	
					92129100	ø 234 x 16 x 41						
SIRION (M3_) 01/05→10/08												
		175600	Sum		**2350701**	[+] 23507 15	⊕ rim size 14" →06/07			**91067900**	ø 180 x 28	
1.0	01/05→	51 / 70										
1.3	01/05→	64 / 87	Luc		**2428303**	[+] 24283 16.5	⊕ rim size 14" 07/07→			**97032600**		
			Sum		**2526201**	[+] 25262 15.4	⊕ rim size 13"			**94036400**	ø 180,0 x 33.5	
			Man		**82072300**		→06/07					

DAIHATSU

DAIHATSU

		kW / hp										
SIRION (M3_) 01/05→10/08												
		175600	Luc		**82512900**		⊕ rim size 14" 07/07→			**91071800**	ø 180 x 27	
1.0	01/05→	51 / 70										
1.3	01/05→	64 / 87			**92129100**	ø 234 x 16 x 41	⊕ rim size 13"					
					92165600	ø 246 x 17 x 41.9	⊕ rim size 14" →12/06					
				PRO	**92204503**	ø 254 x 22 x 42	⊕ rim size 16" 01/07→					
		175700	Sum		**2350701**	[+] 23507 15	⊕ rim size 14" →06/07			**91071800**	ø 180 x 27	
1.0 DVVT 4WD	04/05→	51 / 69	Luc		**2428303**	[+] 24283 16.5	⊕ rim size 14" 07/07→					
			Sum		**2526201**	[+] 25262 15.4	⊕ rim size 13"					
			Man		**82072300**		→06/07					
			Luc		**82512900**		⊕ rim size 14" 07/07→					
					92129100	ø 234 x 16 x 41	⊕ rim size 13"					
					92165600	ø 246 x 17 x 41.9	⊕ rim size 14" →12/06					
				PRO	**92204503**	ø 254 x 22 x 42	⊕ rim size 16" 01/07→					
		175800	Sum		**2350701**	[+] 23507 15				**91067900**	ø 180 x 28	
1.3	03/08→	67 / 91	Luc		**82512900**					**97032600**		
				PRO	**92204503**	ø 254 x 22 x 42				**94036400**	ø 180,0 x 33.5	
		175900	Sum		**2350701**	[+] 23507 15				**91071800**	ø 180 x 27	
1.3 4WD	04/05→	64 / 87			**92129100**	ø 234 x 16 x 41	→12/06					
				PRO	**92204503**	ø 254 x 22 x 42	01/07→					
		176000	Sum		**2350701**	[+] 23507 15				**91071800**	ø 180 x 27	
1.3 4WD	03/08→	67 / 91	Luc		**82512900**							
				PRO	**92204503**	ø 254 x 22 x 42						
		176100	Luc		**2428303**	[+] 24283 16.5				**91067900**	ø 180 x 28	
1.5	03/08→	76 / 103	Luc		**82512900**					**97032600**		
				PRO	**92204503**	ø 254 x 22 x 42				**94036400**	ø 180,0 x 33.5	
		176200	Luc		**2428303**	[+] 24283 16.5				**91071800**	ø 180 x 27	
1.5 4WD	05/06→10/08	76 / 103	Luc		**82512900**							
				PRO	**92204503**	ø 254 x 22 x 42	01/07→					
SPORTRAK (F300) 10/88→12/99 → FEROZA Hard Top (F300), Page 318												
SPORTRAK (F300) 10/88→12/99 → FEROZA Soft Top (F300), Page 318												
STORIA (M1) 04/98→03/05 → SIRION (M1), Page 319												
STORIA 04/05→												
		176300	Sum		**2350701**	[+] 23507 15				**91071800**	ø 180 x 27	
1.0	04/05→	51 / 69										
1.3 4x4	04/05→	64 / 87			**92129100**	ø 234 x 16 x 41	→12/06					
				PRO	**92204503**	ø 254 x 22 x 42	01/07→					
TARUNA (J1) 05/97→ → TERIOS (J1), Page 320												
TERIOS (J1) 05/97→												
		176400	Sum		**2165001**	[+] 21650 15				**91051000**	ø 228.6 x 41.5	
0.7	09/00→	44 / 60										
0.7	09/00→	47 / 64										
0.7 4WD	05/97→08/00	44 / 60	Sum		**82031200**			Sum		**97028900**		
0.7 4WD	05/97→08/00	47 / 64										
1.3	09/01→10/05	63 / 86			**92138200**	ø 273 x 16 x 37.5				**94034300**	ø 228,6 x 54	⊖ ABS
1.3 4WD	10/97→10/00	61 / 83										
1.3 4WD	10/00→10/05	63 / 86								**94034400**	ø 228,6 x 54	⊕ ABS
1.3 VVT-i Turbo 4WD	10/02→10/05	103 / 140										
1.5	05/99→10/05	63 / 86										
1.6	05/99→10/05	66 / 90										

DAIHATSU

DAIHATSU

		kW / hp										
TERIOS (J2_) 11/05→												
		176500	Sum		2165001	[+] 21650 15				91068600	ø 228.6 x 41.5	
1.3 VVT-i	11/05→	63 / 86										
1.5 VVT-i	11/05→	77 / 105	Sum		82031200					94034400	ø 228,6 x 54	
1.5 VVT-i	09/10→	75 / 102										
					92138200	ø 273 x 16 x 37.5						
		176600	Sum		2165001	[+] 21650 15				91068600	ø 228.6 x 41.5	
1.3 VVT-i 4x4	11/05→	63 / 86										
1.5 4x4	05/06→	77 / 105	Sum		82031200					94034300	ø 228,6 x 54	
1.5 VVT-i 4x4	09/10→	75 / 102										
					92138200	ø 273 x 16 x 37.5	⊕ man.					
TREVIS 06/06→												
		176700	Sum		2350701	[+] 23507 15	⊕ rim size 13"			91068000	ø 165 x 28	
1.0	06/06→	43 / 58	Ake		2422901	[+] 24229 15.3	⊕ rim size 14"					
			Sum		82076700		⊕ rim size 13"					
					82510300		⊕ rim size 14"					
					92103700	ø 211 x 11 x 41.2	⊕ rim size 13"					
					92129100	ø 234 x 16 x 41	⊕ rim size 14"					
VALERA IV Stufenheck (G203) 08/94→ → CHARADE IV Saloon (G203), Page 317												
XENIA 01/02→												
		176800		PRO	92254003	ø 233 x 18 x 29.5						
1.0	01/02→	41 / 56										
1.3	01/02→	63 / 86										
YRV (M2) 02/01→												
		176900	Ake		2349701	[+] 23497 15.5				91059700	ø 180 x 38	
1.0	02/01→	43 / 58			82510300							
					92129100	ø 234 x 16 x 41						
		177000	Ake		2349701	[+] 23497 15.5				91057500	ø 180 x 31	
1.3	02/01→	64 / 87			82510300							
1.3 GTti	07/02→	95 / 129			92129100	ø 234 x 16 x 41						
		177100	Ake		2349701	[+] 23497 15.5				91065600	ø 180 x 31	
1.3 4WD	02/01→	64 / 87			82510300							
					92129100	ø 234 x 16 x 41						
YRV Estate (M2) 02/01→ → YRV (M2), Page 321												
YRV Kombi (M2) 02/01→ → YRV (M2), Page 321												

DAIMLER

DAIMLER

		kW / hp										
DAIMLER XJ (X30_) 10/94→06/03												
		177200	Ate		2312601	[o] 23126 17.5			Ate	2448701	[o] 24487 16	
4.0 Long	10/97→06/03	216 / 294			98019000	L300				92139300	ø 305 x 20 x 67.8	
			Ate		82029300							
			Ate		82062900							
					92140200	ø 291 x 28 x 66.8						
		177300	Ate		2312601	[o] 23126 17.5			Ate	2448701	[o] 24487 16	
Double Six 6.0	10/94→06/03	229 / 311			98019000	L300				92139300	ø 305 x 20 x 67.8	
			Ate		82029300					91070100	ø 180 x 30	
			Ate		82062900							
					92140200	ø 291 x 28 x 66.8						

DAIMLER

DAIMLER

DAIMLER XJ (X30_) 10/94→06/03

177400														
Six 4.0	10/94→06/03	177 / 241	Ate		2312601	[o] 23126 17.5		Ate		2448701	[o] 24487 16	
			Ate		82029300					92139300	ø 305 x 20 x 67.8	
			Ate		82062900					91070100	ø 180 x 30	
					92140200	ø 291 x 28 x 66.8						
177500														
Six 4.0	07/97→12/02	209 / 284	Ate		2312601	[o] 23126 17.5		Ate		2448701	[o] 24487 16	
			Ate		82029300					92139300	ø 305 x 20 x 67.8	
			Ate		82062900					91070100	ø 180 x 30	
					92098900	ø 305 x 28.5 x 49.5						
					92140200	ø 291 x 28 x 66.8						
				PRO	92184903	ø 325 x 28 x 49.5						
177600														
V8 Super 4.0	07/97→06/03	267 / 363	Bre		2329301	[–] 23293 18.2		Bre		2138102	[–] 21381 15	Brembo
			Bre		2329301	[–] 23293 18.2	Brembo	Ate		2448701	[o] 24487 16	
					98019000	L300				98019100	L455	
			Bre		82512800					92139300	ø 305 x 20 x 67.8	Teves
			Ate		82029300					91070100	ø 180 x 30	
			Ate		82062900							
				PRO	92184903	ø 325 x 28 x 49.5	Teves					
				PRO	92234603	ø 355 x 32 x 49.5	Brembo A30645→					

DALLAS

DALLAS

FUN 01/94→

177700														
1.4 i	01/94→	55 / 75	Ben		2090506	[+] 20905 18	Bendix	Ben		91031100	ø 180 x 32	Bendix
1.8 D	01/94→	43 / 59	Luc		2098901	[+] 20989 17.7	Lucas	Luc		91031200	ø 180 x 32	Lucas
			Luc		82029000			Ben		91038201	ø 180 x 32	⊕ autom adjustm.
				PRO	92029803	ø 247 x 10 x 34		Ben		97002700		Bendix
								Luc		97007600		Lucas
										94011800	ø 180,0 x 43	

DODGE

DODGE

ATOS 09/05→

177800														
1.1	09/05→	46 / 63	Man		2427701	[+] 24277 16.5				91056800	ø 180 x 32	
			Man		82511100					97037800		
					92146800	ø 234 x 18 x 50.8				94030200	ø 180 x 36	

ATTITUDE 01/06→12/11

177900														
1.3	01/06→12/11	71 / 97	Man		2431701	[+] 24317 17.5		Man		2432001	[+] 24320 15.9	⊕ ABS
1.6	01/06→12/11	82 / 112	Man		82508500					91068900	ø 203 x 31.5	⊖ ABS
1.6	08/10→12/11	92 / 125			92164700	ø 256 x 22 x 46.5				97038800		⊖ ABS
				PRO	92164703	ø 256 x 22 x 46.5				92161300	ø 262 x 10 x 63.8	⊕ ABS
									PRO	92161303	ø 262 x 10 x 63.8	⊕ ABS

→

		kW / hp										
ATTITUDE 01/06→12/11												
		177900										
1.3	01/06→12/11	71 / 97								**94035900**	ø 203,2 x 40.5	⊖ ABS
1.6	01/06→12/11	82 / 112								**91072500**	ø 168 x 32	⊕ ABS
1.6	08/10→12/11	92 / 125										
ATTITUDE 09/11→												
		178000		**2534801**	[+] 25348 17.8		Ake	**2533701**	[+] 25337 15.7	⊕ ABS		
1.4	09/11→	81 / 110										
1.4	01/12→	79 / 108	PRO	**92237903**	ø 256 x 22 x 43.8			**91072600**	ø 203 x 32	⊖ ABS		
1.6	01/12→	91 / 124						PRO **92242203**	ø 262 x 10 x 43.9	⊕ ABS		
AVENGER 06/07→												
		178100	Ake	**2358403**	[+] 23584 16	⊕ rim size 17"	Ake	**2358202**	[+] 23582 15.5	⊕ ABS Ø 302 mm		
2.0	06/07→	115 / 156										
2.0 CRD	06/07→	103 / 140	Ake	**2458301**	[+] 24583 17	⊕ rim size 18"	Ake	**2401401**	[+] 24014 15.4	⊕ ABS Ø 262 mm		
2.4	06/07→	125 / 170										
2.4	06/07→	129 / 175										
2.7	06/07→	137 / 186	Ake	**82507300**		⊕ rim size 18"		**91076800**	ø 228.6 x 37	⊖ ABS		
2.7 Flex-Fuel	06/07→	139 / 189	PRO	**92184403**	ø 294 x 26.1 x 46		PRO	**92177303**	ø 302 x 10 x 60.5			
								94036300	ø 228,5 x 46	⊖ ABS		
AVENGER Saloon 06/07→ → AVENGER, Page 323												
AVENGER Stufenheck 06/07→ → AVENGER, Page 323												
CALIBER 06/06→												
		178200	Ake	**2358403**	[+] 23584 16	⊕ rim size 17"	Ake	**2401401**	[+] 24014 15.4			
1.8	06/06→	110 / 150										
2.0	06/06→	115 / 156	Ake	**2458301**	[+] 24583 17	⊕ rim size 18"		**91076800**	ø 228.6 x 37	⊕ rim size 15"		
2.0 CRD	06/06→	103 / 140										
2.2 CRD	07/10→	120 / 163										
2.4	10/06→	125 / 170	Ake	**82507300**		⊕ rim size 18"		**94036300**	ø 228,5 x 46	⊕ rim size 15"		
2.4	10/06→	126 / 172										
			PRO	**92184403**	ø 294 x 26.1 x 46	⊕ rim size 17" rim size 18"		**91073400**	ø 170 x 32			
CARAVAN (RG_) 02/00→12/07												
		178300	Luc	**2363801**	[+] 23638 17.5	⊕ rim size 15"	Kel	**2403601**	[–] 24036 16	⊕ rear disc brake		
2.4	02/00→12/07	111 / 151										
			Ate	**2364001**	[+] 23640 18	⊕ rim size 16"		**91056000**	ø 250 x 57	⊕ rear drum brake		
				92108200	ø 302 x 28 x 39	⊕ ABS		**92108400**	ø 290 x 12.5 x 56	⊕ rear disc brake		
				92108300	ø 281 x 28 x 38	⊖ ABS		**94028100**	ø 250 x 69	⊕ rear drum brake		
			PRO	**92181503**	ø 302 x 28 x 38.2							
		178400	Luc	**2363801**	[+] 23638 17.5	⊕ rim size 15"	Kel	**2403601**	[–] 24036 16			
3.3	02/00→12/07	128 / 174										
3.3 AWD	02/00→12/07	128 / 174	Ate	**2364001**	[+] 23640 18	⊕ rim size 16"		**92108400**	ø 290 x 12.5 x 56			
3.8	02/00→12/07	160 / 218										
3.8	04/01→05/07	154 / 209										
3.8 AWD	02/00→12/07	160 / 218		**92108200**	ø 302 x 28 x 39	⊕ ABS						
3.8 AWD	04/01→05/07	154 / 209										
3.8 Turbo AWD	04/01→12/07	153 / 208		**92108300**	ø 281 x 28 x 38	⊖ ABS						
		178500	Luc	**2363801**	[+] 23638 17.5	⊕ rim size 15"	Kel	**2403601**	[–] 24036 16			
3.3	04/01→05/07	132 / 179										
			Ate	**2364001**	[+] 23640 18	⊕ rim size 16"		**92108400**	ø 290 x 12.5 x 56			
				92108200	ø 302 x 28 x 39	⊕ ABS						
				92108300	ø 281 x 28 x 38	⊖ ABS						
			PRO	**92181503**	ø 302 x 28 x 38.2							
CARAVAN 01/95→03/01												
		178600	Kel	**2304301**	[–] 23043 18.6	10/96→	Kel	**2510801**	[–] 25108 15.9	⊕ ABS 10/96→		
2.0 i	01/95→03/01	98 / 133										
2.4 i	01/95→03/01	111 / 151	Kel	**2495301**	[–] 24593 16.5	→09/96		**91056000**	ø 250 x 57			
2.5 TD	01/95→03/01	85 / 116										
3.0	01/95→03/01	112 / 152										
3.3 i	01/95→03/01	116 / 158		**92108700**	ø 282.5 x 23.7 x 38		Ben	**97033900**				
3.8 i	01/95→03/01	122 / 166										
3.8 i	01/95→03/01	131 / 178						**94028100**	ø 250 x 69			
3.8 i AWD	01/95→03/01	122 / 166										
3.8 i AWD	01/95→03/01	131 / 178										
CARAVAN 01/08→												
		178700	Bos	**2460401**	[+] 24604 18.5	BR3 -brake BR4 -brake BRE -brake BRG -brake	Luc	**2482201**	[+] 24822 17	→MY 2011 BRE -brake BRG -brake BR3 -brake BR4 -brake		
2.8 CRD	01/09→	120 / 163										
3.3	01/08→	131 / 178	Ake	**2537801**	[+] 25378 18.1	MY 2012→ BR3 -brake				MY 2012→ BRE -brake		
3.6	01/12→	208 / 283					TRW	**2537601**	[+] 25376 17.6	MY 2012→ BR3 -brake		
3.8	01/08→	142 / 193										
4.0	01/09→	189 / 257										

DODGE

DODGE

		kW / hp												
CARAVAN 01/08→														
		178700	Luc		82060200		→MY 2011 MY 2012→ BRE -brake	Luc		82060200		
2.8 CRD	01/09→	120 / 163										
3.3	01/08→	131 / 178										
3.6	01/12→	208 / 283										
3.8	01/08→	142 / 193										
4.0	01/09→	189 / 257										
CHALLENGER Coupe 09/07→														
		178800	Bos		2416401	[+] 24164 17.8		Bos		2416301	[+] 24163 17.8	
3.5	09/08→12/10	186 / 253										
3.6	01/11→	227 / 309	Bos		2416601	[+] 24166 18.8						
5.7	09/08→	277 / 377										
5.7	01/10→	280 / 381										
		178900						Bre		2314301	[+] 23143 14.3	
6.1 SRT8	09/07→	317 / 431										
CHARGER 06/05→12/10														
		179000	Bos		2416401	[+] 24164 17.8	⊕ Performance	Bos		2416301	[+] 24163 17.8	
2.7	04/06→12/10	141 / 192										
3.5	06/05→12/10	186 / 253	Bos		2416601	[+] 24166 18.8						
		179100	Bos		2416401	[+] 24164 17.8		Bos		2416301	[+] 24163 17.8	
5.7 R/T	06/05→12/07	254 / 345										
5.7 R/T	06/05→12/10	257 / 349	Bos		2416601	[+] 24166 18.8						
		179200	Bre		2407501	[+] 24075 17		Bre		2407601	[+] 24076 14.8	
6.1 SRT8	09/05→12/10	317 / 431										
DART 04/12→														
		179300	Ate		2434001	[+] 24340 20.1				2515601	[+] 25156 17.8	
1.4 T	04/12→	119 / 162	Ate		82076900			Luc		82518700		
				PRO	92220803	ø 305 x 28 x 39.7			PRO	92230203	ø 264 x 10 x 40.5	
H 100 Box 09/10→														
		179400			2459701	[+] 24597 17.6		Man		2459901	[+] 24599 15.5	
2.4	09/11→	128 / 174										
2.5 D	09/10→	74 / 100			92203800	ø 300 x 30 x 52.5				92203900	ø 324 x 18 x 82.6	
										91076000	ø 212 x 37	
H 100 Bus 09/10→														
		179500			2459701	[+] 24597 17.6		Man		2459901	[+] 24599 15.5	
2.4	09/11→	128 / 174										
2.5 D	09/10→	74 / 100			92203800	ø 300 x 30 x 52.5				92203900	ø 324 x 18 x 82.6	
										91076000	ø 212 x 37	
H 100 Kasten 09/10→ → H 100 Box, Page 324														
i 10 09/11→														
		179600	Man		2427501	[+] 24275 16.8		Man		2427601	[+] 24276 14.8	⊕ ABS
1.1	09/11→	49 / 66	Man		2536501	[+] 25365 16.6				82512600		⊕ ABS
					82502400					92147200	ø 234 x 10 x 37.5	
					92147100	ø 241 x 18 x 48.7						
INTREPID 10/97→09/04														
		179700	Kel		2304301	[–] 23043 18.6		Kel		2356102	[–] 23561 17	
2.7	10/97→09/04	149 / 203										
3.2	04/98→09/04	168 / 228										
3.5 ES	04/98→09/04	187 / 254										
JOURNEY 06/08→														
		179800	Bos		2460401	[+] 24604 18.5	⊖ ABS	Luc		2482201	[+] 24822 17	
2.0 CRD	06/08→	103 / 140										
2.4	09/08→	129 / 175										
2.4	01/09→	125 / 170	Bos		2460402	[+] 24604 17.5	⊕ ABS		PRO	92181003	ø 305 x 12 x 33	
2.4	06/12→	127 / 173										
2.4 ECO+	03/09→	125 / 170										
2.7	01/09→	136 / 185										
2.7 FLEXFUEL	01/09→	136 / 185										
3.5	06/08→	173 / 235										
3.5 AWD	06/08→	173 / 235										
3.6	01/12→	211 / 287										
3.6	06/12→	206 / 280										
3.6	06/12→	208 / 283										
3.6 Flexfuel	01/11→	211 / 287										
NEON II 08/99→09/05														
		179900	Kel		2304301	[–] 23043 18.6		Kel		2356102	[–] 23561 17	
2.0	10/99→09/05	110 / 150										
2.0 16V	08/99→	98 / 133										
2.0 16V	08/99→	112 / 152		PRO	92152403	ø 257 x 20 x 38				92108600	ø 270 x 9 x 53.3	

→

		kW / hp												
NEON II 08/99→09/05														
		180000	Luc		2353202	[+] 23532 20			Kel		2356102	[–] 23561 17	
2.4	10/04→09/05	160 / 218			82512100								
NEON II Saloon 08/99→09/05 → NEON II, Page 324														
NEON II Stufenheck 08/99→09/05 → NEON II, Page 324														
NEON 05/94→08/99														
		180100	Kel		2304301	[–] 23043 18.6			Kel		2356102	[–] 23561 17	⊕ rear disc brake 09/97→
2.0 16V	05/94→08/99	98 / 133											
2.0 16V	06/94→08/99	107 / 145	Kel		2374001	[–] 23740 15.5					2513601	25136 17	
2.0 16V	04/96→08/99	109 / 148											
2.0 16V	04/96→08/99	112 / 152									91063800	ø 200 x 34	⊕ rear drum brake
NEON Coupe 01/94→09/99														
		180200	Kel		2304301	[–] 23043 18.6					2513601	25136 17	
2.0 Highline	01/94→09/99	98 / 133											
2.0 HP Sport	10/94→09/99	112 / 152	Kel		2374001	[–] 23740 15.5					91063800	ø 200 x 34	⊕ rear drum brake
NEON Saloon 05/94→08/99 → NEON, Page 325														
NEON Stufenheck 05/94→08/99 → NEON, Page 325														
NITRO 09/06→														
		180300	Bos		2460402	[+] 24604 17.5			TRW		2460201	[+] 24602 16	
2.8 CRD	06/07→	130 / 177											
2.8 CRD 4WD	06/07→	130 / 177		PRO	92203303	ø 301.5 x 28 x 57.4							
3.7 V6	06/07→	154 / 210											
3.7 V6 4WD	06/07→	151 / 205											
4.0 4WD	09/06→12/07	191 / 260											
STRATUS 12/95→09/02														
		180400	Ben		2331801	[+] 23318 15.9			Kel		2356102	[–] 23561 17	
2.0 16V	12/95→04/01	98 / 133											
2.4 16V	12/95→04/01	112 / 152											
2.4 16 V	12/95→04/01	103 / 140											
2.4 16 V	10/00→09/02	108 / 147											
2.5 V6	12/95→04/01	125 / 170											
STRATUS Saloon 12/95→09/02 → STRATUS, Page 325														
STRATUS Stufenheck 12/95→09/02 → STRATUS, Page 325														
VERNA Hatchback 10/02→08/06														
		180500	Ake		2101202	[+] 21012 14.8					91059600	ø 180 x 35	
1.5	10/02→08/06	65 / 88			82501500						97016500		
					92128500	ø 241 x 19 x 52					94030300	ø 180 x 44.6	
VERNA Saloon 10/02→08/06														
		180600	Ake		2101202	[+] 21012 14.8					91059600	ø 180 x 35	
1.5	10/02→08/06	65 / 88											
1.6	10/02→08/06	76 / 103			82501500						97016500		
					92128500	ø 241 x 19 x 52					94030300	ø 180 x 44.6	
VERNA Schrägheck 10/02→08/06 → VERNA Hatchback, Page 325														
VERNA Stufenheck 10/02→08/06 → VERNA Saloon, Page 325														
VIPER Cabriolet 10/97→09/02 → VIPER Convertible, Page 325														
VIPER Cabriolet 09/02→ → VIPER Convertible, Page 325														
VIPER Convertible 10/97→09/02														
		180700	Bre		2138103	[+] 21381 18							
8.0 RT10	10/97→09/02	282 / 383											
8.0 RT10 ACR	10/97→09/02	335 / 455											
VIPER Convertible 09/02→														
		180800	Bre		2368701	[+] 23687 17.5			Bre		2368701	[+] 23687 17.5	
SRT-10	09/02→	372 / 506											
SRT-10	01/08→	450 / 612											
SRT-10	09/08→	450 / 612											
VIPER Coupe 10/97→09/02														
		180900	Bre		2138103	[+] 21381 18							
8.0 RT10	10/97→09/02	282 / 383											
8.0 RT10 ACR	10/97→09/02	335 / 455											
VIPER Coupe 01/03→														
		181000	Bre		2368701	[+] 23687 17.5			Bre		2368701	[+] 23687 17.5	
SRT-10	01/03→	372 / 506											
SRT-10	09/07→12/10	450 / 612											
SRT-10	09/07→12/10	450 / 612											

DR

DR

30 kW / hp

DR 1 03/10→

		181100			2366201	[+] 23662 15						
1.0	03/10→	50 / 68										
1.0 Flex	03/10→	50 / 68										
1.0 LPG	03/10→	50 / 68										
1.3	03/10→	61 / 83										
1.3 Flex	03/10→	61 / 83										
1.3 LPG	03/10→	61 / 83										

DR 2 09/10→

		181200			2366201	[+] 23662 15						
1.3	09/10→	61 / 83										
1.3 Flex	09/10→	61 / 83										
1.3 LPG	09/10→	61 / 83										

DR 5 01/11→

		181300	Luc		2066928	[–] 20669 18		Ake		2365601	[+] 23656 14	
1.6	01/11→	80 / 109										
1.6	01/11→	87 / 118								92144100	ø 303 x 9 x 62.2	
1.6 Flex	01/11→	80 / 109										
1.6 LPG	01/11→	80 / 109										
1.8	01/11→	97 / 132							PRO	92144103	ø 303 x 9 x 62.2	
1.9 D	01/11→	88 / 120										
2.0	01/11→	94 / 128										
2.0	01/11→	102 / 139										
2.0 4WD	01/11→	102 / 139										
2.0 Flex	01/11→	94 / 128										
2.0 LPG	01/11→	94 / 128										

EUNOS

EUNOS

30 kW / hp

500 Saloon 01/92→10/99

		181400	Sum		2384504	[+] 23845 16.5		Sum		2176603	[–] 21766 14.8	
2.0	01/92→10/99	105 / 143										
					92062000	ø 258 x 24 x 48.5				92062100	ø 261 x 10 x 40.2	

500 Stufenheck 01/92→10/99 → 500 Saloon, Page 326

800 Saloon (E65, TA) 09/93→12/02

		181500	Ake		2157101	[+] 21571 17.1		Ake		2131901	[+] 21319 13	
2.5	09/93→08/00	123 / 167										
2.5	09/00→12/02	120 / 163			92079200	ø 274 x 28 x 51				82033500		
										92093000	ø 286 x 9.5 x 56.5	

800 Stufenheck (E65, TA) 09/93→12/02 → 800 Saloon (E65, TA), Page 326

		kW / hp										
FUTURE Großraumlimousine 03/01→ → FUTURE MPV, Page 327												
FUTURE MPV 03/01→												
		181600	Ake		2329002	[+] 23290 15.5	→01/04					
2.0	03/01→	93 / 126										
2.4	03/01→	97 / 132										

		kW / hp										
126 07/81→09/00												
		181700	Ben		91005900	ø 185 x 31		Ben		91005900	ø 185 x 31	
650	07/81→09/00	18 / 24	Fia		97011700			Fia		97011700		
					94006400	ø 185,3 x 35.7				94006400	ø 185,3 x 35.7	
500 10/07→												
		181800	Ate		2542901	[+] 25429 16.7		Bos		91064600	ø 180 x 32	
0.9	07/10→	63 / 86	Ate		82029200			Lkh		97009500		
				PRO	92236703	ø 257 x 12 x 40.5	⊕ light alloy rim			84064600	bore ø 20.6 ø 180 x 32	
				PRO	92252803	ø 284 x 22 x 43.3	⊕ steel rim			94014800	ø 180,0 x 40.1	
		181900	Ate		2542901	[+] 25429 16.7		Lkh		97014900		
0.9	09/12→	48 / 65										
0.9	12/13→	44 / 60	Ate		82029200					94014800	ø 180,0 x 40.1	
				PRO	92236703	ø 257 x 12 x 40.5						
		182000	Bos		2370601	[+] 23706 17.8		Luc		2534701	[+] 25347 13.7	
0.9	10/13→	77 / 105										
0.9	12/13→	59 / 80		PRO	92069603	ø 257 x 22 x 40.5			PRO	92061103	ø 240 x 11 x 40	
		182100	Ben		2143603	[+] 21436 17		Lkh		91061000	ø 180 x 32	Lockheed ⊖ ABS
1.2	10/07→	51 / 69										
1.2 LPG	12/10→	51 / 69	Ben		82033600			Bos		91064600	ø 180 x 32	Lockheed ⊕ ABS
			Ben		82063600			Ben		97005800		Lockheed ⊖ ABS
				PRO	92061103	ø 240 x 11 x 40		Lkh		97009500		Lockheed ⊕ ABS
										84064600	bore ø 20.6 ø 180 x 32	Lockheed ⊕ ABS
										94014800	ø 180,0 x 40.1	
		182200	Bos		2407202	[+] 24072 17.7		Lkh		91061000	ø 180 x 32	Lockheed ⊖ ABS
1.3 D Multijet	10/07→	55 / 75	Bos		82054300			Bos		91064600	ø 180 x 32	Lockheed ⊕ ABS
				PRO	92118003	ø 240 x 20 x 40.5		Ben		97005800		Lockheed ⊖ ABS
								Lkh		97009500		Lockheed ⊕ ABS
										84064600	bore ø 20.6 ø 180 x 32	Lockheed ⊕ ABS
										94014800	ø 180,0 x 40.1	
		182300	Bos		2397901	[+] 23979 17.8		Bos		91064600	ø 180 x 32	
1.3 D Multijet	12/09→	70 / 95	Bos		82054300			Lkh		97009500		
				PRO	92069603	ø 257 x 22 x 40.5	Teves			84064600	bore ø 20.6 ø 180 x 32	
										94014800	ø 180,0 x 40.1	
		182400	Bos		2397901	[+] 23979 17.8		Luc		2360102	[–] 23601 13.7	
1.4	10/07→	74 / 100										
1.4	09/08→	75 / 102	Bos		82054300			Luc		82060100		
				PRO	92069603	ø 257 x 22 x 40.5			PRO	92061103	ø 240 x 11 x 40	
		182500	Bos		2370601	[+] 23706 17.8	⊕ Lounge	Luc		2360102	[–] 23601 13.7	
1.4	01/12→	65 / 88										
1.4 Flex	08/11→	65 / 88	Bos		2397901	[+] 23979 17.8		Luc		2534701	[+] 25347 13.7	⊕ Lounge
1.4 Multiair	08/11→	77 / 105										
			Bos		82054300		⊕ Lounge		PRO	92061103	ø 240 x 11 x 40	

		kW / hp										
500 10/07→												
		182500	Bos		**82054300**							
1.4	01/12→	65 / 88										
1.4 Flex	08/11→	65 / 88		PRO	**92069603**	ø 257 x 22 x 40.5						
1.4 Multiair	08/11→	77 / 105										
		182600	Bos		**2370901**	[+] 23709 19		Luc		**2360102**	[–] 23601 13.7	
1.4 Abarth	08/08→	99 / 135										
1.4 Abarth	05/10→	103 / 140	Bos		**82054300**			Luc		**82060100**		
				PRO	**92053503**	ø 284 x 22 x 43.5			PRO	**92061103**	ø 240 x 11 x 40	
		182700	Bre		**2468701**	[+] 24687 15.3		Luc		**2534701**	[+] 25347 13.7	
1.4 Abarth	08/08→	118 / 160										
1.4 Abarth	08/08→	132 / 180										
1.4 Abarth Asseto Corse	08/08→	140 / 190										
		182800	Bos		**2370601**	[+] 23706 17.8	⊕ Lounge	Luc		**2360102**	[–] 23601 13.7	
1.4 Flex	08/11→	79 / 107										
			Bos		**2397901**	[+] 23979 17.8		Luc		**2534701**	[+] 25347 13.7	⊕ Lounge
				PRO	**92069603**	ø 257 x 22 x 40.5			PRO	**92061103**	ø 240 x 11 x 40	
500 C 09/09→												
		182900	Ate		**2542901**	[+] 25429 16.7		Bos		**91064600**	ø 180 x 32	
0.9	09/09→	63 / 86		PRO	**92236703**	ø 257 x 12 x 40.5	⊕ light alloy rim	Lkh		**97009500**		
				PRO	**92252803**	ø 284 x 22 x 43.3	⊕ steel rim			**84064600**	bore ø 20.6 ø 180 x 32	
										94014800	ø 180,0 x 40.1	
		183000	Ate		**2542901**	[+] 25429 16.7		Lkh		**97014900**		
0.9	09/12→	48 / 65	Ate		**82029200**					**94014800**	ø 180,0 x 40.1	
				PRO	**92236703**	ø 257 x 12 x 40.5						
		183100	Bos		**2370601**	[+] 23706 17.8		Luc		**2534701**	[+] 25347 13.7	
0.9	12/13→	77 / 105		PRO	**92069603**	ø 257 x 22 x 40.5			PRO	**92061103**	ø 240 x 11 x 40	
		183200	Bos		**2407202**	[+] 24072 17.7		Lkh		**91061000**	ø 180 x 32	Lockheed ⊖ ABS
1.2	09/09→	51 / 69	Ben		**82033600**			Bos		**91064600**	ø 180 x 32	Lockheed ⊕ ABS
			Ben		**82063600**			Ben		**97005800**		Lockheed ⊖ ABS
				PRO	**92118003**	ø 240 x 20 x 40.5		Lkh		**97009500**		Lockheed ⊕ ABS
										84064600	bore ø 20.6 ø 180 x 32	Lockheed ⊕ ABS
										94014800	ø 180,0 x 40.1	
		183300	Bos		**2407202**	[+] 24072 17.7		Lkh		**91061000**	ø 180 x 32	Lockheed ⊖ ABS
1.3 D Multijet	09/09→	55 / 75	Bos		**82054300**			Bos		**91064600**	ø 180 x 32	Lockheed ⊕ ABS
			Bos		**82063800**			Ben		**97005800**		Lockheed ⊖ ABS
			Bos		**82510100**			Lkh		**97009500**		Lockheed ⊕ ABS
				PRO	**92118003**	ø 240 x 20 x 40.5				**84064600**	bore ø 20.6 ø 180 x 32	Lockheed ⊕ ABS
										94014800	ø 180,0 x 40.1	
		183400	Bos		**2397901**	[+] 23979 17.8		Luc		**2360102**	[–] 23601 13.7	
1.3 D Multijet	09/09→	70 / 95										
1.4	09/09→	74 / 100										
1.4	01/11→	99 / 135	Bos		**82054300**			Luc		**82060100**		
				PRO	**92069603**	ø 257 x 22 x 40.5			PRO	**92061103**	ø 240 x 11 x 40	
		183500	Bos		**2370802**	[+] 23708 19	→2011-05	Luc		**2360102**	[–] 23601 13.7	
1.4 Abarth	09/09→	103 / 140	Bos	epad	**2370881**	[+] 23708 19	→2011-05	Luc		**82060100**		
			Bos		**2370901**	[+] 23709 19	2011-06→		PRO	**92061103**	ø 240 x 11 x 40	
			Bos		**82054300**							
				PRO	**92053503**	ø 284 x 22 x 43.5						
		183600	Bre		**2468701**	[+] 24687 15.3		Luc		**2534701**	[+] 25347 13.7	
1.4 Abarth	09/09→	132 / 180										

→

		kW / hp											
500 C 09/09→													
1.4 Abarth	05/11→	183700 118 / 160	Bos		2370901	[+] 23709 19		Luc		2534701	[+] 25347 13.7	
			Bos		82054300				PRO	92061103	ø 240 x 11 x 40	
1.4 Flex	08/11→	183800 79 / 107	Bos		2370601	[+] 23706 17.8	⊕ SS Gucci	Luc		2360102	[–] 23601 13.7	
1.4 Multiair	08/11→	77 / 105	Bos		2397901	[+] 23979 17.8		Luc		2534701	[+] 25347 13.7	⊕ SS Gucci
				PRO	92069603	ø 257 x 22 x 40.5			PRO	92061103	ø 240 x 11 x 40	
500L 09/12→													
0.9	09/12→	183900 77 / 105	Bos		2454901	[+] 24549 19.4		TRW		2565201	[+] 25652 17.1	
1.3 D Multijet	09/12→	62 / 84		PRO	92252803	ø 284 x 22 x 43.3			PRO	92244303	ø 251 x 10 x 40.6	
1.4	09/12→	70 / 95										
0.9 Natural Power	03/13→	184000 63 / 86	Bos		82514000				PRO	92244303	ø 251 x 10 x 40.6	
				PRO	92252803	ø 284 x 22 x 43.3						
1.4	10/13→	184100 88 / 120	Ate		82076900							
1.4 LPG	02/14→	88 / 120										
1.6 D Multijet	09/13→	88 / 120										
1.6 D Multijet	09/12→	184200 77 / 105	Bos		2454901	[+] 24549 19.4	without accessories	TRW		2565201	[+] 25652 17.1	without accessories
			Bos		82514000				PRO	92244303	ø 251 x 10 x 40.6	
				PRO	92252803	ø 284 x 22 x 43.3						
ALBEA (178_) 04/96→10/07 → SIENA (178_), Page 369													
ALBEA 11/07→ → SIENA, Page 370													
BARCHETTA (183) 04/95→05/05													
1.8 16V	04/95→05/05	184300 96 / 130	Luc		2083302	[+] 20833 17.1	→1997-03-15	Luc		2317703	[–] 23177 14.4	
			Ate		2192701	[+] 21927 17.9	1997-03-15→	Luc		82037300		
			Ate		82030900		1997-03-15→		PRO	92061103	ø 240 x 11 x 40	
			Luc		82062800							
				PRO	92068503	ø 257 x 20 x 40.5						
BRAVA (182) 10/95→06/03													
1.2 16V	12/98→12/02	184400 64 / 87	Ate		2193002	[+] 21930 17.9	⊕ Classic line	Lkh		91049200	ø 180 x 32	⊖ ABS
			Ate		82032000			Lkh		91053600	ø 203.2 x 38	⊕ ABS
								Lkh		84049201	bore ø 22.2 ø 180 x 32	⊖ ABS
										94014800	ø 180,0 x 40.1	⊖ ABS
										94019900	ø 203,2 x 48.5	⊕ ABS
1.2 16V 80	12/98→12/02	184500 60 / 82	Ate		2193002	[+] 21930 17.9		Ben		91046500	ø 203.2 x 39	⊕ ABS
			Ate		82030900			Lkh		91049200	ø 180 x 32	⊖ ABS
			Ate		82062900			Lkh		91053600	ø 203.2 x 38	⊕ ABS
				PRO	92041503	ø 257 x 12 x 40.5		Ben		97005100		⊕ ABS
								Lkh		97009500		⊖ ABS
								Lkh		97015200		⊕ ABS
								Ben		84046501	bore ø 22.2 ø 203.2 x 39	⊕ ABS
								Lkh		84053600	bore ø 22.2 ø 203.2 x 38	⊕ ABS
								Lkh		84053601	bore ø 22.2 ø 203.2 x 38	04/00→ ⊕ ABS
										94014800	ø 180,0 x 40.1	⊖ ABS
										94019900	ø 203,2 x 48.5	⊕ ABS
1.2 16V 80	10/00→10/01	184600 59 / 80	Ate		2193002	[+] 21930 17.9		Ben		91046500	ø 203.2 x 39	⊕ ABS
			Ate		82030900			Lkh		91049200	ø 180 x 32	⊖ ABS

BRAVA (182) 10/95→06/03

		kW / hp										
1.2 16V 80	10/00→10/01	184600 59 / 80	Ate	82062900			Lkh	91053600	ø 203.2 x 38	⊕ ABS
			PRO	92041503	ø 257 x 12 x 40.5		Ben	97005100		⊕ ABS
							Lkh	97009500		⊖ ABS
							Lkh	97015200		⊕ ABS
							Ben	84046501	bore ø 22.2 ø 203.2 x 39	⊕ ABS
							Lkh	84053600	bore ø 22.2 ø 203.2 x 38	⊕ ABS
							Lkh	84053601	bore ø 22.2 ø 203.2 x 38	⊕ ABS
								94014800	ø 180,0 x 40.1	⊖ ABS
								94019900	ø 203,2 x 48.5	⊕ ABS
1.4 (182.BG)	10/95→10/01	184700 55 / 75	Ate	2193002	[+] 21930 17.9		Ben	91046500	ø 203.2 x 39	⊕ ABS
			Ate	82030900			Lkh	91053600	ø 203.2 x 38	⊕ ABS
			Ate	82062900			Ben	97005100		⊕ ABS
			PRO	92041503	ø 257 x 12 x 40.5		Lkh	97009500		⊖ ABS
							Lkh	97015200		⊕ ABS
							Ben	84046501	bore ø 22.2 ø 203.2 x 39	⊕ ABS
							Lkh	84049201	bore ø 22.2 ø 180 x 32	⊖ ABS
							Lkh	84053600	bore ø 22.2 ø 203.2 x 38	⊕ ABS
							Lkh	84053601	bore ø 22.2 ø 203.2 x 38	04/00→
								94014800	ø 180,0 x 40.1	⊖ ABS
								94019900	ø 203,2 x 48.5	⊕ ABS
1.6 16V	01/99→12/02	184800 78 / 106	Ate	2192701	[+] 21927 17.9	⊕ autom.	Lkh	91053600	ø 203.2 x 38	
			Ate	2193002	[+] 21930 17.9	⊕ Classic line		94019900	ø 203,2 x 48.5	
			Ate	82032000						
			PRO	92068503	ø 257 x 20 x 40.5	⊕ autom.				
1.6 16V (182.BB)	02/96→10/01	184900 76 / 103	Ate	2192701	[+] 21927 17.9	⊕ autom.	Ben	91046500	ø 203.2 x 39	Bendix
1.6 16V (182.BH)	10/95→10/01	66 / 90								
1.6 16V (182.BU)	01/99→12/02	76 / 103	Ate	2193002	[+] 21930 17.9	⊕ man.	Lkh	91053600	ø 203.2 x 38	Lockheed
			Ate	82030900			Ben	97005100		
			Ate	82062900			Lkh	97015200		
			PRO	92041503	ø 257 x 12 x 40.5	⊕ man.	Ben	84046501	bore ø 22.2 ø 203.2 x 39	Bendix
			PRO	92068503	ø 257 x 20 x 40.5	⊕ autom.	Lkh	84053600	bore ø 22.2 ø 203.2 x 38	Lockheed
							Lkh	84053601	bore ø 22.2 ø 203.2 x 38	04/00→
								94019900	ø 203,2 x 48.5	
1.8 16V	02/00→06/03	185000 92 / 125	Ate	2192701	[+] 21927 17.9		Lkh	91053600	ø 203.2 x 38	
			Ate	82032000				94019900	ø 203,2 x 48.5	
			PRO	92068503	ø 257 x 20 x 40.5					
1.8 GT 16V (182.BC)	10/95→10/01	185100 83 / 113	Ate	2192701	[+] 21927 17.9		Ben	91046500	ø 203.2 x 39	Bendix
1.9 JTD 105	12/98→10/01	77 / 105	Ate	82030900			Lkh	91053600	ø 203.2 x 38	Lockheed
			Ate	82062900			Ben	97005100		
			PRO	92068503	ø 257 x 20 x 40.5		Lkh	97015200		
							Ben	84046501	bore ø 22.2 ø 203.2 x 39	Bendix

→

		kW / hp											
BRAVA (182) 10/95→06/03													
		185100							Lkh		**84053600**	bore ø 22.2 ø 203.2 x 38	Lockheed
1.8 GT 16V (182.BC)	10/95→10/01	83 / 113							Lkh		**84053601**	bore ø 22.2 ø 203.2 x 38	04/00→
1.9 JTD 105	12/98→10/01	77 / 105									**94019900**	ø 203,2 x 48.5	
		185200	Ate		**2193002**	[+] 21930 17.9			Ben		**91046500**	ø 203.2 x 39	⊕ ABS
1.9 D	10/95→10/01	48 / 65	Ate		**82030900**				Lkh		**91049200**	ø 180 x 32	⊖ ABS
			Ate		**82062900**				Lkh		**91053600**	ø 203.2 x 38	⊕ ABS
				PRO	**92041503**	ø 257 x 12 x 40.5			Ben		**97005100**		⊕ ABS
									Lkh		**97009500**		⊖ ABS
									Lkh		**97015200**		⊕ ABS
									Ben		**84046501**	bore ø 22.2 ø 203.2 x 39	⊕ ABS
									Lkh		**84049201**	bore ø 22.2 ø 180 x 32	⊖ ABS
									Lkh		**84053600**	bore ø 22.2 ø 203.2 x 38	⊕ ABS
									Lkh		**84053601**	bore ø 22.2 ø 203.2 x 38	04/00→
											94014800	ø 180,0 x 40.1	⊖ ABS
											94019900	ø 203,2 x 48.5	⊕ ABS
		185300	Ate		**2192701**	[+] 21927 17.9			Ben		**91046500**	ø 203.2 x 39	Bendix
1.9 JTD	09/00→10/01	74 / 100											
1.9 JTD	01/01→12/02	79 / 107	Ate		**82030900**				Lkh		**91053600**	ø 203.2 x 38	Lockheed
1.9 TD 100 S (182.BF)	03/96→10/01	74 / 100	Ate		**82062900**				Ben		**97005100**		
				PRO	**92068503**	ø 257 x 20 x 40.5			Lkh		**97015200**		
									Ben		**84046501**	bore ø 22.2 ø 203.2 x 39	Bendix
									Lkh		**84053600**	bore ø 22.2 ø 203.2 x 38	Lockheed
									Lkh		**84053601**	bore ø 22.2 ø 203.2 x 38	
											94019900	ø 203,2 x 48.5	
		185400	Ate		**2193002**	[+] 21930 17.9			Ben		**91046500**	ø 203.2 x 39	Bendix
1.9 TD 75 S (182.BF)	03/96→10/01	55 / 75	Ate		**82030900**				Lkh		**91053600**	ø 203.2 x 38	Lockheed
			Ate		**82062900**				Ben		**97005100**		
				PRO	**92041503**	ø 257 x 12 x 40.5			Lkh		**97015200**		
									Ben		**84046501**	bore ø 22.2 ø 203.2 x 39	Bendix
									Lkh		**84053600**	bore ø 22.2 ø 203.2 x 38	Lockheed
									Lkh		**84053601**	bore ø 22.2 ø 203.2 x 38	04/00→
											94019900	ø 203,2 x 48.5	
		185500	Ate		**2322201**	[+] 23222 19	04/00→		Luc		**2317703**	[–] 23177 14.4	
2.0	09/98→08/00	113 / 154	Ate		**2328902**	[+] 23289 19	→03/00		Luc		**82037300**		
			Ate		**82032000**					PRO	**92061103**	ø 240 x 11 x 40	
			Ate		**82062900**								
				PRO	**92053503**	ø 284 x 22 x 43.5							
BRAVO I (182) 10/95→02/02													
		185600	Ate		**2193002**	[+] 21930 17.9			Ben		**91046500**	ø 203.2 x 39	⊕ ABS Bendix
1.2 16V 80	12/98→10/00	60 / 82											
1.4 (182.AA)	10/95→10/01	59 / 80	Ate		**82030900**				Lkh		**91049200**	ø 180 x 32	⊖ ABS
1.4 (182.AG)	10/95→10/01	55 / 75	Ate		**82062900**				Lkh		**91053600**	ø 203.2 x 38	⊕ ABS

F - H

BRAVO I (182) 10/95→02/02

		kW / hp											
		185600											
1.2 16V 80	12/98→10/00	60 / 82		PRO	92041503	ø 257 x 12 x 40.5		Ben		97005100		⊕ ABS
1.4 (182.AA)	10/95→10/01	59 / 80						Lkh		97009500		⊖ ABS
1.4 (182.AG)	10/95→10/01	55 / 75						Lkh		97015200		⊕ ABS
								Ben		84046501	bore ø 22.2 ø 203.2 x 39	⊕ ABS Bendix
								Lkh		84049201	bore ø 22.2 ø 180 x 32	⊖ ABS
								Lkh		84053600	bore ø 22.2 ø 203.2 x 38	⊕ ABS
								Lkh		84053601	bore ø 22.2 ø 203.2 x 38	04/00→
										94014800	ø 180,0 x 40.1	⊖ ABS
										94019900	ø 203,2 x 48.5	⊕ ABS
		185700										
1.2 16V 80	12/98→10/01	64 / 87	Ate		2193002	[+] 21930 17.9	⊕ Classic line	Lkh		91049200	ø 180 x 32	⊖ ABS
			Ate		82032000			Lkh		91053600	ø 203.2 x 38	⊕ ABS
								Lkh		84049201	bore ø 22.2 ø 180 x 32	⊖ ABS
										94014800	ø 180,0 x 40.1	⊖ ABS
										94019900	ø 203,2 x 48.5	⊕ ABS
		185800										
1.2 16V 80	10/00→10/01	59 / 80	Ate		2193002	[+] 21930 17.9		Ben		91046500	ø 203.2 x 39	⊕ ABS Bendix
			Ate		82030900			Lkh		91049200	ø 180 x 32	⊖ ABS
			Ate		82062900			Lkh		91053600	ø 203.2 x 38	⊕ ABS
				PRO	92041503	ø 257 x 12 x 40.5		Ben		97005100		⊕ ABS
								Lkh		97009500		⊖ ABS
								Lkh		97015200		⊕ ABS
								Ben		84046501	bore ø 22.2 ø 203.2 x 39	⊕ ABS Bendix
								Lkh		84049201	bore ø 22.2 ø 180 x 32	⊖ ABS
								Lkh		84053600	bore ø 22.2 ø 203.2 x 38	⊕ ABS
								Lkh		84053601	bore ø 22.2 ø 203.2 x 38	
										94014800	ø 180,0 x 40.1	⊖ ABS
										94019900	ø 203,2 x 48.5	⊕ ABS
		185900										
1.6	09/00→02/02	76 / 103	Ate		2192701	[+] 21927 17.9	⊕ autom.	Ben		91046500	ø 203.2 x 39	Bendix
			Ate		2193002	[+] 21930 17.9	⊕ man.	Lkh		91053600	ø 203.2 x 38	Lockheed
			Ate		82030900			Ben		97005100		
			Ate		82062900			Lkh		97015200		
				PRO	92041503	ø 257 x 12 x 40.5	⊕ man.	Ben		84046501	bore ø 22.2 ø 203.2 x 39	Bendix
				PRO	92068503	ø 257 x 20 x 40.5	⊕ autom.	Lkh		84053600	bore ø 22.2 ø 203.2 x 38	Lockheed
								Lkh		84053601	bore ø 22.2 ø 203.2 x 38	
										94019900	ø 203,2 x 48.5	
		186000										
1.6 16V (182.AB)	03/96→10/01	76 / 103	Ate		2192701	[+] 21927 17.9	⊕ autom.	Ben		91046500	ø 203.2 x 39	Bendix
1.6 16V (182.AH)	10/95→10/01	66 / 90	Ate		2193002	[+] 21930 17.9	⊕ man.	Lkh		91053600	ø 203.2 x 38	Lockheed
			Ate		82030900			Ben		97005100		
			Ate		82062900			Lkh		97015200		
				PRO	92041503	ø 257 x 12 x 40.5	⊕ man.	Ben		84046501	bore ø 22.2 ø 203.2 x 39	Bendix
				PRO	92068503	ø 257 x 20 x 40.5	⊕ autom.	Lkh		84053600	bore ø 22.2 ø 203.2 x 38	Lockheed

→

30 kW / hp

BRAVO I (182) 10/95→02/02

186000												
1.6 16V (182.AB)	03/96→10/01	76 / 103						Lkh		84053601	bore ø 22.2 ø 203.2 x 38	04/00→
1.6 16V (182.AH)	10/95→10/01	66 / 90								94019900	ø 203,2 x 48.5	
186100			Ate		2192701	[+] 21927 17.9		Ben		91046500	ø 203.2 x 39	Bendix
1.8 GT (182.AC)	10/95→10/01	83 / 113	Ate		82030900			Lkh		91053600	ø 203.2 x 38	Lockheed
			Ate		82062900			Ben		97005100		
				PRO	92068503	ø 257 x 20 x 40.5		Lkh		97015200		
								Ben		84046501	bore ø 22.2 ø 203.2 x 39	Bendix
								Lkh		84053600	bore ø 22.2 ø 203.2 x 38	Lockheed
								Lkh		84053601	bore ø 22.2 ø 203.2 x 38	04/00→
										94019900	ø 203,2 x 48.5	
186200			Ate		2193002	[+] 21930 17.9		Ben		91046500	ø 203.2 x 39	⊕ ABS Bendix
1.9 D	10/95→10/01	48 / 65	Ate		82030900			Lkh		91049200	ø 180 x 32	⊖ ABS
			Ate		82062900			Lkh		91053600	ø 203.2 x 38	⊕ ABS
				PRO	92041503	ø 257 x 12 x 40.5		Ben		97005100		⊕ ABS
								Lkh		97009500		⊖ ABS
								Lkh		97015200		⊕ ABS
								Ben		84046501	bore ø 22.2 ø 203.2 x 39	⊕ ABS Bendix
								Lkh		84049201	bore ø 22.2 ø 180 x 32	⊖ ABS
								Lkh		84053600	bore ø 22.2 ø 203.2 x 38	⊕ ABS
										94014800	ø 180,0 x 40.1	⊖ ABS
										94019900	ø 203,2 x 48.5	⊕ ABS
186300			Ate		2192701	[+] 21927 17.9		Ben		91046500	ø 203.2 x 39	Bendix
1.9 JTD	09/00→10/01	74 / 100	Ate		82030900			Lkh		91053600	ø 203.2 x 38	Lockheed
1.9 JTD 105	12/98→10/01	77 / 105	Ate		82062900			Ben		97005100		
1.9 TD 100 S (182.AF)	03/96→10/01	74 / 100		PRO	92068503	ø 257 x 20 x 40.5		Lkh		97015200		
								Ben		84046501	bore ø 22.2 ø 203.2 x 39	Bendix
								Lkh		84053600	bore ø 22.2 ø 203.2 x 38	Lockheed
										94019900	ø 203,2 x 48.5	
186400			Ate		2193002	[+] 21930 17.9		Ben		91046500	ø 203.2 x 39	Bendix
1.9 TD 75 S (182.AF)	03/96→10/01	55 / 75	Ate		82030900			Lkh		91053600	ø 203.2 x 38	Lockheed
			Ate		82062900			Ben		97005100		
				PRO	92041503	ø 257 x 12 x 40.5		Lkh		97015200		
								Ben		84046501	bore ø 22.2 ø 203.2 x 39	Bendix
								Lkh		84053600	bore ø 22.2 ø 203.2 x 38	Lockheed
										94019900	ø 203,2 x 48.5	
186500			Ate		2322201	[+] 23222 19	04/00→	Luc		2317703	[–] 23177 14.4	
2.0 HGT 20V (182AQ)	07/98→10/01	113 / 154	Ate		2328902	[+] 23289 19	→03/00	Luc		82037300		
			Ate		82032000				PRO	92061103	ø 240 x 11 x 40	
			Ate		82062900							
				PRO	92053503	ø 284 x 22 x 43.5						

F - H

BRAVO II (198) 11/06→12/08

		kW / hp												
		186600	Bos		2370502	[+] 23705	17.8		Bos		2371401	[–] 23714	15.5	→12/09
1.4	04/07→	66 / 90												
1.4 LPG	11/09→	66 / 90	Bos	epad	2370581	[+] 23705	17.8		Bos	epad	2371481	[–] 23714	15.5	→12/09
			Bos		82054200				Bos		2371403	[+] 23714	17.2	01/10→
				PRO	92069603	ø 257 x 22 x 40.5			Bos		82054300			
										PRO	92034203	ø 251 x 10 x 50.5		
		186700	Bos		2370502	[+] 23705	17.8	⊕ steel rim	Bos		2371401	[–] 23714	15.5	→12/09
1.4 16V	03/08→	103 / 140												
1.4 T-Jet	09/07→	110 / 150	Bos	epad	2370581	[+] 23705	17.8	⊕ steel rim	Bos	epad	2371481	[–] 23714	15.5	→12/09
1.6 D Multijet	11/08→	85 / 115												
1.9 D Multijet	04/07→	110 / 150	Bos		2371102	[+] 23711	18.2	⊕ light alloy rim →07/10	Bos		2371403	[+] 23714	17.2	01/10→
2.0 D Multijet	09/08→	120 / 163												
2.0 D Multijet	09/08→	121 / 165	Bos		2371104	[+] 23711	19.4	07/10→ ⊕ light alloy rim	Bos		82054300			
			Bos		82054200					PRO	92034203	ø 251 x 10 x 50.5		
				PRO	92107703	ø 281 x 26 x 43.5								
		186800	Bos		2370802	[+] 23708	19		Bos		2371401	[–] 23714	15.5	→12/09
1.4 T-Jet	09/07→	88 / 120												
1.6 D Multijet	03/08→	66 / 90	Bos	epad	2370881	[+] 23708	19		Bos	epad	2371481	[–] 23714	15.5	→12/09
1.6 D Multijet	03/08→	77 / 105												
1.6 D Multijet	03/08→	88 / 120	Bos		82054200				Bos		2371403	[+] 23714	17.2	01/10→
1.9 D Multijet	04/07→	88 / 120		PRO	92053503	ø 284 x 22 x 43.5			Bos		82054300			
										PRO	92034203	ø 251 x 10 x 50.5		
		186900	Bos		2370502	[+] 23705	17.8	⊕ steel rim	Bos		2371403	[+] 23714	17.2	
1.4 T-Jet	06/11→	112 / 152												
			Bos	epad	2370581	[+] 23705	17.8	⊕ steel rim	Bos		82054300			
			Bos		2371104	[+] 23711	19.4	⊕ light alloy rim		PRO	92034203	ø 251 x 10 x 50.5		
			Bos		82054200									
				PRO	92107703	ø 281 x 26 x 43.5								
		187000	Bos		2370502	[+] 23705	17.8	⊕ steel rim	Bos		2371401	[–] 23714	15.5	→12/09
1.8 16V	09/08→	96 / 130												
1.8 Flex	09/08→	97 / 132	Bos	epad	2370581	[+] 23705	17.8	⊕ steel rim	Bos	epad	2371481	[–] 23714	15.5	→12/09
			Bos		2371102	[+] 23711	18.2	⊕ light alloy rim →07/10	Bos		2371403	[+] 23714	17.2	01/10→
			Bos		2371104	[+] 23711	19.4	07/10→ 1096216→ ⊕ light alloy rim	Bos		82054300			
			Bos		82054200					PRO	92034203	ø 251 x 10 x 50.5		
				PRO	92107703	ø 281 x 26 x 43.5								
		187100	Bos		2370802	[+] 23708	19		Bos		2371401	[–] 23714	15.5	→12/09
1.9 D Multijet	11/06→	85 / 116												
			Bos	epad	2370881	[+] 23708	19		Bos	epad	2371481	[–] 23714	15.5	→12/09
				PRO	92053503	ø 284 x 22 x 43.5			Bos		2371403	[+] 23714	17.2	01/10→
									Bos		82054300			
										PRO	92034203	ø 251 x 10 x 50.5		
		187200	Bos		2370802	[+] 23708	19		Bos		2371401	[–] 23714	15.5	
1.9 D Multijet	04/07→12/08	66 / 90												
			Bos	epad	2370881	[+] 23708	19		Bos	epad	2371481	[–] 23714	15.5	
			Bos		82054200				Bos		82054300			
				PRO	92053503	ø 284 x 22 x 43.5				PRO	92034203	ø 251 x 10 x 50.5		

BRAVO Van (198) 03/08→

		187300	Bos		2370802	[+] 23708	19		Bos		2371401	[–] 23714	15.5	→12/09
1.6 D Multijet	03/08→	77 / 105												
			Bos	epad	2370881	[+] 23708	19		Bos	epad	2371481	[–] 23714	15.5	→12/09
			Bos		82054200				Bos		82054300			

→

		kW / hp											
BRAVO Van (198) 03/08→													
		187300											
1.6 D Multijet	03/08→	77 / 105		PRO	92053503	ø 284 x 22 x 43.5			PRO	92034203	ø 251 x 10 x 50.5	
CINQUECENTO (170) 07/91→07/99													
		187400	Ben		2136502	[–] 21365 17		Ben		91005900	ø 185 x 31	
0.9 i.e. S (170AF, 170CF)	07/91→07/99	29 / 40	Ben		82033600			Fia		97002500		
			Ben		82063600			Ben		83005900	bore ø 19 ø 185 x 31	
				PRO	92061103	ø 240 x 11 x 40				94006400	ø 185,3 x 35.7	
COUPE (FA/175) 03/96→08/00													
		187500	Luc		2316803	[+] 23168 19.3	Lucas	Luc		2317703	[–] 23177 14.4	
1.8 16V	03/96→08/00	96 / 131										
2.0 20V	04/98→08/00	113 / 154	Ate		2328902	[+] 23289 19	Teves	Luc		82037300		
			Ate		82032000			Luc		82062800		
			Luc		82062800				PRO	92061103	ø 240 x 11 x 40	
			Ate		82062900							
				PRO	92055203	ø 284 x 22 x 39.4						
		187600	Bre		2138103	[+] 21381 18		Luc		2317703	[–] 23177 14.4	
2.0 20V Turbo	08/96→08/00	162 / 220			92092900	ø 305 x 28 x 44.7		Luc		82037300		
								Luc		82062800		
									PRO	92061103	ø 240 x 11 x 40	
CROMA (194) 06/05→													
		187700	Ate		2373807	[o] 23738 20.6		Luc		2434801	[–] 24348 16.8	
1.8 16V	12/05→	103 / 140			98029100	L685				82075600		
1.9 D Multijet	06/05→	85 / 115										
1.9 D Multijet	06/05→	88 / 120	Ate		82032000				PRO	92118503	ø 278 x 12 x 41.5	
2.2 16V	06/05→	108 / 147	Ate		82062900							
				PRO	92118703	ø 285 x 25 x 41.9						
		187800	Ate		2373807	[o] 23738 20.6	→2060168	Luc		2434802	[–] 24348 16.8	
1.9 D Multijet	06/05→	110 / 150	Luc		2429401	[+] 24294 19.3	2060169→			82075500		
					98029100	L685	→2060168		PRO	92118403	ø 292 x 20 x 41.5	
			Gir		82059500							
			Luc		82063300							
					92155400	ø 305 x 28 x 45	→2060168					
				PRO	92118703	ø 285 x 25 x 41.9	2060168→					
		187900	Luc		2429401	[+] 24294 19.3		Luc		2434802	[–] 24348 16.8	
1.9 D Multijet	12/05→	100 / 136										
2.4 D Multijet	06/05→	147 / 200	Gir		82059500					82075500		
			Luc		82063300				PRO	92118403	ø 292 x 20 x 41.5	
					92155400	ø 305 x 28 x 45						
DOBLO (119) 03/01→05/05													
		188000	Ate		2384201	[–] 23842 18	Teves			91059900	ø 228.6 x 42	→09/05
1.2 (223AXA1A)	03/01→	48 / 65	Bos		2397901	[+] 23979 17.8	Bosch			91062000	ø 228.6 x 42	10/05→
			Bos		82054200					97015700		→09/05
			Ate		82027100					97034000		10/05→
			Ate		82062900					84059900	bore ø 20.6 ø 228.6 x 42	→09/05
				PRO	92053503	ø 284 x 22 x 43.5	10/05→			94014000	ø 228,3 x 48	

F - H

		kW / hp										
DOBLO (119) 03/01→05/05												
		188000										
1.2 (223AXA1A)	03/01→	48 / 65		PRO	92068503	ø 257 x 20 x 40.5	→09/05					
		188100	Ate		2384201	[–] 23842 18	Teves			91062000	ø 228.6 x 42	
1.2 16V	09/05→	59 / 80										
1.3 JTD	05/05→	55 / 75	Bos		2397901	[+] 23979 17.8	Bosch			97034000		
1.4	08/09→	63 / 86										
1.8	09/03→01/06	76 / 103	Bos		82054200					94014000	ø 228,3 x 48	
1.8	01/06→	84 / 114										
1.8 Flex	05/06→07/10	82 / 112	Ate		82027100							
			Ate		82062900							
				PRO	92053503	ø 284 x 22 x 43.5						
				PRO	92069603	ø 257 x 22 x 40.5						
		188200	Bos		2370803	[–] 23708 19	Bosch			91062000	ø 228.6 x 42	
1.3 D Multijet	10/05→	62 / 84										
1.4	10/05→	57 / 77	Ate		2384201	[–] 23842 18	Teves			97034000		
1.9 D Multijet	10/05→	88 / 120										
			Bos		82054200					94014000	ø 228,3 x 48	
			Ate		82027100							
			Ate		82062900							
				PRO	92053503	ø 284 x 22 x 43.5						
		188300	Bos		2370803	[–] 23708 19	Ø 284 mm			91062000	ø 228.6 x 42	
1.3 JTD 16V	12/04→05/05	51 / 70										
			Bos		2397901	[+] 23979 17.8	Ø 257 mm			94014000	ø 228,3 x 48	
			Bos		2397903	[+] 23979 17.8	Ø 257 mm					
			Bos		82514000		Ø 284 mm					
				PRO	92053503	ø 284 x 22 x 43.5						
				PRO	92069603	ø 257 x 22 x 40.5						
		188400	Ate		2384201	[–] 23842 18	Teves			91059900	ø 228.6 x 42	→09/05
1.6	09/02→	68 / 92										
1.6 16V (223AXD1A)	10/01→	76 / 103	Bos		2397901	[+] 23979 17.8	Bosch			91062000	ø 228.6 x 42	10/05→
1.6 Natural Power	09/02→	76 / 103										
			Bos		82054200					97015700		→09/05
			Ate		82027100					97034000		10/05→
			Ate		82062900					84059900	bore ø 20.6 ø 228.6 x 42	→09/05
				PRO	92068503	ø 257 x 20 x 40.5	→09/05			84062001	bore ø 20.6 ø 228 x 40	10/05→
				PRO	92069603	ø 257 x 22 x 40.5	10/05→			94014000	ø 228,3 x 48	
		188500	Ate		2384201	[–] 23842 18	Teves			91059900	ø 228.6 x 42	→09/05
1.9 D (223AXB1A)	03/01→	46 / 63										
			Bos		2397901	[+] 23979 17.8	Bosch			91062000	ø 228.6 x 42	10/05→
			Bos		82054200					97015700		→09/05
			Ate		82027100					97034000		10/05→
			Ate		82062900					84059900	bore ø 20.6 ø 228.6 x 42	→09/05
				PRO	92053503	ø 284 x 22 x 43.5	10/05→			84062001	bore ø 20.6 ø 228 x 40	10/05→
				PRO	92068503	ø 257 x 20 x 40.5	→09/05			94014000	ø 228,3 x 48	
		188600	Bos		2370803	[–] 23708 19	Bosch			91059900	ø 228.6 x 42	→09/05
1.9 JTD	07/03→	77 / 105										
1.9 JTD (223AXE1A)	10/01→	74 / 100	Ate		2384201	[–] 23842 18	Teves			91062000	ø 228.6 x 42	10/05→
			Bos		82054200					97015700		→09/05
			Ate		82027100					97034000		10/05→
			Ate		82062900					84059900	bore ø 20.6 ø 228.6 x 42	→09/05
				PRO	92053503	ø 284 x 22 x 43.5	10/05→			84062001	bore ø 20.6 ø 228 x 40	10/05→

			kW / hp											
DOBLO (119) 03/01→05/05														
		188600												
1.9 JTD	07/03→	77 / 105		PRO	**92068503**	ø 257 x 20 x 40.5	→09/05			**94014000**	ø 228,3 x 48	
1.9 JTD (223AXE1A)	10/01→	74 / 100										
DOBLO Box Body / Estate (263) 02/10→														
		188700	Bos		**2370802**	[+] 23708 19	Bosch Ø 284 mm			**91062000**	ø 228.6 x 42	
1.3 D Multijet	02/10→	66 / 90										
1.4	02/10→	70 / 95	Bos		**2370881**	[+] 23708 19	Bosch Ø 284 mm			**97034000**		
1.4	10/11→	88 / 120		epad								
1.4 Natural Power	06/10→	88 / 120	Ate		**2472701**	[+] 24727 20	Teves Ø 305 mm					
1.6 D Multijet	02/10→	66 / 90										
1.6 D Multijet	02/10→	74 / 100	Bos		**82054200**		Bosch Ø 284 mm					
1.6 D Multijet	02/10→	77 / 105										
2.0 D Multijet	02/10→	99 / 135	Ate		**82076900**		Teves Ø 305 mm					
					92046800	ø 284 x 22 x 43.5	Bosch					
					92237600	ø 305 x 28 x 45.8	Teves					
				PRO	**92046803**	ø 284 x 22 x 43.5	Bosch					
		188800	Bos		**2370901**	[+] 23709 19	Ø 284 mm 2014-01→			**91062000**	ø 228.6 x 42	⊕ specific rear brake
1.3 D Multijet	11/13→	55 / 75										
			Ate		**2472701**	[+] 24727 20	Ø 305 mm	Lkh		**97030900**		
			Ate		**82076900**		Ø 305 mm			**84062000**	bore ø 20.6 ø 228.6 x 42	⊕ specific rear brake
					92046800	ø 284 x 22 x 43.5				**84062001**	bore ø 20.6 ø 228 x 40	⊕ specific rear brake
					92237600	ø 305 x 28 x 45.8						
				PRO	**92046803**	ø 284 x 22 x 43.5						
		188900	Bos		**2370901**	[+] 23709 19	Ø 284 mm			**91062000**	ø 228.6 x 42	⊕ specific rear brake
1.4 Flex	01/14→	63 / 86										
			Ate		**2472701**	[+] 24727 20	Ø 305 mm	Lkh		**97030900**		
			Ate		**82076900**		Ø 305 mm			**84062000**	bore ø 20.6 ø 228.6 x 42	⊕ specific rear brake
					92046800	ø 284 x 22 x 43.5				**84062001**	bore ø 20.6 ø 228 x 40	⊕ specific rear brake
					92237600	ø 305 x 28 x 45.8						
				PRO	**92046803**	ø 284 x 22 x 43.5						
DOBLO Cargo (223) 11/00→01/10														
		189000	Ate		**2384201**	[–] 23842 18	Teves			**91059900**	ø 228.6 x 42	→09/05
1.2 (223ZXA1A)	03/01→	48 / 65										
1.9 D (223ZXB1A)	03/01→	46 / 63	Bos		**2397901**	[+] 23979 17.8	Bosch			**91062000**	ø 228.6 x 42	10/05→
			Bos		**82054200**					**97015700**		→09/05
			Ate		**82027100**					**97034000**		10/05→
			Ate		**82062900**					**84059900**	bore ø 20.6 ø 228.6 x 42	→09/05
				PRO	**92053503**	ø 284 x 22 x 43.5	10/05→			**84062001**	bore ø 20.6 ø 228 x 40	10/05→
				PRO	**92068503**	ø 257 x 20 x 40.5	→09/05			**94014000**	ø 228,3 x 48	
		189100	Ate		**2384201**	[–] 23842 18	Teves			**91062000**	ø 228.6 x 42	
1.2 16V	11/01→	59 / 80										
1.4 Flexfuel	08/09→	63 / 86	Bos		**2397901**	[+] 23979 17.8	Bosch			**97034000**		
1.8	09/03→01/06	76 / 103										
1.8 Flexfuel	02/02→	84 / 114	Bos		**82054200**					**94014000**	ø 228,3 x 48	
			Ate		**82027100**							
			Ate		**82062900**							
				PRO	**92053503**	ø 284 x 22 x 43.5						
				PRO	**92069603**	ø 257 x 22 x 40.5						
		189200	Bos		**2370803**	[–] 23708 19	01/08→ Bosch			**91062000**	ø 228.6 x 42	
1.3 D Multijet	10/05→01/10	55 / 75										
			Ate		**2384201**	[–] 23842 18	Teves			**97034000**		
			Bos		**2397901**	[+] 23979 17.8	→12/07 Bosch			**94014000**	ø 228,3 x 48	

F - H

DOBLO Cargo (223) 11/00→01/10

		kW / hp										
1.3 D Multijet	10/05→01/10	189200 55 / 75	Bos	82054200								
			Ate	82027100								
			Ate	82062900								
			PRO	92053503	ø 284 x 22 x 43.5	Ø 284 mm						
			PRO	92068503	ø 257 x 20 x 40.5	Ø 257 mm						
			PRO	92069603	ø 257 x 22 x 40.5	→12/07 Bosch						
1.3 JTD 16V	05/04→12/06	189300 51 / 70	Bos	2370803	[–] 23708 19	Bosch		91059900	ø 228.6 x 42	→09/05		
1.9 JTD	07/03→	77 / 105	Ate	2384201	[–] 23842 18	Teves		91062000	ø 228.6 x 42	10/05→		
			Bos	82054200				97015700		→09/05		
			Ate	82027100				97034000		10/05→		
			Ate	82062900				84059900	bore ø 20.6 ø 228.6 x 42	→09/05		
			PRO	92053503	ø 284 x 22 x 43.5	10/05→		84062001	bore ø 20.6 ø 228 x 40	10/05→		
			PRO	92068503	ø 257 x 20 x 40.5	→09/05		94014000	ø 228,3 x 48			
1.3 JTD 16V Multijet	08/06→	189400 62 / 84	Bos	2370803	[–] 23708 19	Bosch		91062000	ø 228.6 x 42			
1.9 JTD Multijet	12/06→	88 / 120	Ate	2384201	[–] 23842 18	Teves		97034000				
			Bos	82054200				94014000	ø 228,3 x 48			
			Ate	82027100								
			Ate	82062900								
			PRO	92053503	ø 284 x 22 x 43.5							
1.4	10/05→	189500 57 / 77	Ate	2384201	[–] 23842 18	Teves		91062000	ø 228.6 x 42			
			Bos	2397901	[+] 23979 17.8	Bosch		97034000				
			Bos	82054200				94014000	ø 228,3 x 48			
			Ate	82027100								
			Ate	82062900								
			PRO	92053503	ø 284 x 22 x 43.5							
1.6 16V (223XD1A)	10/01→	189600 76 / 103	Ate	2384201	[–] 23842 18	Teves		91059900	ø 228.6 x 42	→09/05		
1.6 Natural Power	09/02→	76 / 103	Bos	2397901	[+] 23979 17.8	Bosch		91062000	ø 228.6 x 42	10/05→		
			Bos	82054200				97015700		→09/05		
			Ate	82027100				97034000		10/05→		
			Ate	82062900				84059900	bore ø 20.6 ø 228.6 x 42	→09/05		
			PRO	92068503	ø 257 x 20 x 40.5	→09/05		84062001	bore ø 20.6 ø 228 x 40	10/05→		
			PRO	92069603	ø 257 x 22 x 40.5	10/05→		94014000	ø 228,3 x 48			
1.8	11/00→12/04	189700 77 / 105	Ate	2384201	[–] 23842 18			91059900	ø 228.6 x 42			
			Ate	82027100				84059900	bore ø 20.6 ø 228.6 x 42			
			PRO	92068503	ø 257 x 20 x 40.5			94014000	ø 228,3 x 48			
1.8 Flexfuel	08/10→	189800 97 / 132	Bos	2370901	[+] 23709 19	Ø 284 mm 2014-01→		91062000	ø 228.6 x 42	⊕ specific rear brake		
			Ate	2472701	[+] 24727 20	Ø 305 mm	Lkh	97030900				
			Ate	82076900		Ø 305 mm		84062000	bore ø 20.6 ø 228.6 x 42	⊕ specific rear brake		
				92046800	ø 284 x 22 x 43.5			84062001	bore ø 20.6 ø 228 x 40	⊕ specific rear brake		
				92237600	ø 305 x 28 x 45.8							

→

		kW / hp										
DOBLO Cargo (223) 11/00→01/10												
		189800			92046803	ø 284 x 22 x 43.5						
1.8 Flexfuel	08/10→	97 / 132										
		189900	Bos		2370803	[–] 23708 19	10/05→ Ø 284 mm			91059900	ø 228.6 x 42	→09/05
1.9 JTD (223ZXE1A)	10/01→	74 / 100	Ate		2384201	[–] 23842 18	Teves			91062000	ø 228.6 x 42	10/05→
			Bos		2397901	[+] 23979 17.8	10/05→ Ø 257 mm			97015700		→09/05
			Bos		82054200					97034000		10/05→
			Ate		82027100					84059900	bore ø 20.6 ø 228.6 x 42	→09/05
			Ate		82062900					84062001	bore ø 20.6 ø 228 x 40	10/05→
					92053503	ø 284 x 22 x 43.5	10/05→			94014000	ø 228,3 x 48	
					92068503	ø 257 x 20 x 40.5	→09/05					
					92069603	ø 257 x 22 x 40.5	10/05→					
DOBLO Combi (152, 263) 11/09→ → DOBLO MPV (152, 263), Page 339												
DOBLO Großraumlimousine (152, 263) 11/09→ → DOBLO MPV (152, 263), Page 339												
DOBLO Kasten/Kombi (263) 02/10→ → DOBLO Box Body / Estate (263), Page 337												
DOBLO Kombi (152, 263) 11/09→ → DOBLO MPV (152, 263), Page 339												
DOBLO MPV (152, 263) 11/09→												
		190000	Bos		2370802	[+] 23708 19	Bosch Ø 284 mm			91062000	ø 228.6 x 42	
1.3 D Multijet	02/10→	66 / 90										
1.4	02/10→	70 / 95	Bos		2370881	[+] 23708 19	Bosch Ø 284 mm			97034000		
1.4	10/11→	88 / 120		epad								
1.4 Flex	11/09→	63 / 85	Ate		2472701	[+] 24727 20	Teves Ø 305 mm					
1.4 Natural Power	02/10→	88 / 120										
1.6 D Multijet	02/10→	66 / 90										
1.6 D Multijet	02/10→	77 / 105	Bos		82054200		Bosch Ø 284 mm					
1.8 Flex	11/09→07/10	82 / 112										
1.8 MPI Flex	08/10→	96 / 131	Ate		82076900		Teves Ø 305 mm					
2.0 D Multijet	02/10→	99 / 135										
					92046800	ø 284 x 22 x 43.5	Bosch					
					92237600	ø 305 x 28 x 45.8	Teves					
					92046803	ø 284 x 22 x 43.5	Bosch					
DOBLO Platform/Chassis (263) 02/10→												
		190100	Bos		2370802	[+] 23708 19	Bosch Ø 284 mm			91062000	ø 228.6 x 42	
1.3 D Multijet	02/10→	66 / 90										
1.4	04/10→	70 / 95	Bos		2370881	[+] 23708 19	Bosch Ø 284 mm			97034000		
1.6 D Multijet	02/10→	66 / 90		epad								
1.6 D Multijet	02/10→	77 / 105	Ate		2472701	[+] 24727 20	Teves Ø 305 mm					
1.6 D Multijet	02/11→	74 / 101										
2.0 D Multijet	02/10→	99 / 135	Bos		82054200		Bosch Ø 284 mm					
			Ate		82076900		Teves Ø 305 mm					
					92046800	ø 284 x 22 x 43.5	Bosch					
					92237600	ø 305 x 28 x 45.8	Teves					
					92046803	ø 284 x 22 x 43.5	Bosch					
		190200	Bos		2370901	[+] 23709 19	Ø 284 mm 2014-01→			91062000	ø 228.6 x 42	⊕ specific rear brake
1.3 D Multijet	11/13→	55 / 75	Ate		2472701	[+] 24727 20	Ø 305 mm	Lkh		97030900		
			Ate		82076900		Ø 305 mm			84062000	bore ø 20.6 ø 228.6 x 42	⊕ specific rear brake
					92046800	ø 284 x 22 x 43.5				84062001	bore ø 20.6 ø 228 x 40	⊕ specific rear brake
					92237600	ø 305 x 28 x 45.8						
					92046803	ø 284 x 22 x 43.5						
DOBLO Pritsche/Fahrgestell (263) 02/10→ → DOBLO Platform/Chassis (263), Page 339												
DUCATO Box (230L) 03/94→04/02												
		190300	Luc		2179701	[+] 21797 19.7	⊕ 11 + 14 →08/01 ⊕ round plug ⊕ 1000 kg payload 1400 kg payload	Bre		2392101	[–] 23921 20.1	⊕ rear disc brake 09/01→
1.9 D	03/94→04/02	51 / 69										
1.9 D	04/98→04/02	50 / 68								82061700		⊕ rear disc brake 09/01→
1.9 TD	03/94→04/02	60 / 82	Luc		2179901	[+] 21799 19.7	⊕ 18 →08/01 ⊕ round plug ⊕ 1800 kg payload					
1.9 TD	04/98→04/02	66 / 90										
1.9 TD	05/98→11/01	59 / 80										

DUCATO Box (230L) 03/94→04/02

		kW / hp											
1.9 TD CAT	08/94→04/02	59 / 80	Luc		2360201	[+] 23602 19.7	⊕ 11 + 14 →08/01 ⊕ flat plug ⊕ 1000 kg payload 1400 kg payload	Luc		91047900	ø 254 x 57	⊕ rear drum brake ⊕ 11 + 14 ⊕ 1000 kg payload 1400 kg payload
2.0	03/94→04/02	80 / 109						Luc		91049600	ø 254 x 57	⊕ rear drum brake ⊕ 18 ⊕ 1800 kg payload
2.0 4x4	11/94→04/02	80 / 109	Luc		2360301	[+] 23603 19.7	⊕ 18 →08/01 ⊕ flat plug ⊕ 1800 kg payload	Lkh		91060900	ø 254 x 57	⊕ 10 + 14 ⊕ rear drum brake payl.1000 kg→ →payl.1400 kg
2.5 D	03/94→04/02	62 / 84	Bre		2391701	[+] 23917 19.1	⊕ 11 + 14 09/01→ payl.1000 kg→ →payl.1400 kg	Luc		97010300		Lucas
2.5 TDI	03/94→04/02	80 / 109	Bre		2391901	[+] 23919 19.1	⊕ 18 09/01→ ⊕ 1800 kg payload			97031300		Lockheed
2.5 TDI	03/94→04/02	85 / 116	Luc		82063300		→08/01	Luc		84047900	bore ø 25.4 ø 254 x 57	⊕ rear drum brake ⊕ 11 ⊕ 1000 kg payload
2.5 TDI 4x4	05/98→04/02	85 / 116		PRO	92073703	ø 280 x 18 x 65.5	⊕ 11 + 14 ⊕ 1000 kg payload 1400 kg payload	Luc		84047901	bore ø 27 ø 254 x 57	⊕ rear drum brake ⊕ 14 ⊕ 1400 kg payload
2.8 D	05/98→04/02	64 / 87		PRO	92116603	ø 280 x 24 x 65.5	⊕ 11 + 14 payl.1000 kg→ →payl.1400 kg	Luc		84049600	bore ø 28.6 ø 254 x 57	⊕ rear drum brake ⊕ 18 ⊕ 1800 kg payload
2.8 D 4x4	08/98→04/02	64 / 87		PRO	92116703	ø 300 x 24 x 65.5	⊕ 18 ⊕ 1800 kg payload	Lkh		84060900	bore ø 27 ø 254 x 57	⊕ 10 + 14 ⊕ rear drum brake payl.1000 kg→ →payl.1400 kg
2.8 JTD	11/00→04/02	94 / 128								92116100	ø 280 x 16 x 82	⊕ 11 + 14 payl.1000 kg→ →payl.1400 kg
2.8 JTD 4x4	11/00→04/02	94 / 128							PRO	92116203	ø 280 x 16 x 82	⊕ 18 ⊕ 1800 kg payload
2.8 TDI	10/97→04/02	90 / 122								94010200	ø 254,0 x 63.5	⊕ rear drum brake ⊕ 11 + 14 payl.1000 kg→ →payl.1400 kg
2.8 TDI 4x4	06/99→04/02	90 / 122								94014600	ø 254,0 x 64.5	⊕ rear drum brake ⊕ 18 ⊕ 1800 kg payload
										91062100	ø 172 x 42	
										97035300		
		190400	Bre		2391701	[+] 23917 19.1	⊕ 11 + 14 payl.1000 kg→ →payl.1400 kg	Bre		2392101	[–] 23921 20.1	⊕ rear disc brake
2.0 JTD	10/01→04/02	62 / 84	Bre		2391901	[+] 23919 19.1	⊕ 18 ⊕ 1800 kg payload			82061700		⊕ rear disc brake
				PRO	92073703	ø 280 x 18 x 65.5	⊕ 11 + 14 ⊕ 1000 kg payload 1400 kg payload	Luc		91047900	ø 254 x 57	⊕ rear drum brake ⊕ 11 + 14 ⊕ 1000 kg payload 1400 kg payload
				PRO	92116603	ø 280 x 24 x 65.5	⊕ 11 + 14 payl.1000 kg→ →payl.1400 kg	Luc		91049600	ø 254 x 57	⊕ rear drum brake ⊕ 18 ⊕ 1800 kg payload
				PRO	92116703	ø 300 x 24 x 65.5	⊕ 18 ⊕ 1800 kg payload	Lkh		91060900	ø 254 x 57	⊕ 10 + 14 ⊕ rear drum brake payl.1000 kg→ →payl.1400 kg
								Luc		97010300		Lucas
										97031300		Lockheed
								Luc		84047900	bore ø 25.4 ø 254 x 57	⊕ rear drum brake ⊕ 11 ⊕ 1000 kg payload
								Luc		84047901	bore ø 27 ø 254 x 57	⊕ rear drum brake ⊕ 14 ⊕ 1400 kg payload
								Luc		84049600	bore ø 28.6 ø 254 x 57	⊕ rear drum brake ⊕ 18 ⊕ 1800 kg payload
								Lkh		84060900	bore ø 27 ø 254 x 57	⊕ 10 + 14 ⊕ rear drum brake payl.1000 kg→ →payl.1400 kg
										92116100	ø 280 x 16 x 82	⊕ 11 + 14 payl.1000 kg→ →payl.1400 kg
									PRO	92116203	ø 280 x 16 x 82	⊕ 18 ⊕ 1800 kg payload
										94010200	ø 254,0 x 63.5	⊕ rear drum brake ⊕ 11 + 14 payl.1000 kg→ →payl.1400 kg
										94014600	ø 254,0 x 64.5	⊕ rear drum brake ⊕ 18 ⊕ 1800 kg payload
										91062100	ø 172 x 42	
										97035300		
		190500	Luc		2179701	[+] 21797 19.7	⊕ 11 + 14 ⊕ round plug ⊕ 1000 kg payload 1400 kg payload	Luc		91047900	ø 254 x 57	⊕ rear drum brake ⊕ 11 + 14 ⊕ 1000 kg payload 1400 kg payload
2.8 TD 4x4	05/98→09/01	90 / 122	Luc		2179901	[+] 21799 19.7	⊕ 18 ⊕ round plug ⊕ 1800 kg payload	Luc		91049600	ø 254 x 57	⊕ rear drum brake ⊕ 18 ⊕ 1800 kg payload
			Luc		2360201	[+] 23602 19.7	⊕ 11 + 14 ⊕ flat plug ⊕ 1000 kg payload 1400 kg payload	Lkh		91060900	ø 254 x 57	⊕ 10 + 14 ⊕ rear drum brake payl.1000 kg→ →payl.1400 kg
			Luc		2360301	[+] 23603 19.7	⊕ 18 ⊕ flat plug ⊕ 1800 kg payload	Luc		97010300		Lucas
										97031300		Lockheed
			Luc		82063300		→08/01					
				PRO	92073703	ø 280 x 18 x 65.5	⊕ 11 + 14 ⊕ 1000 kg payload 1400 kg payload	Luc		84047900	bore ø 25.4 ø 254 x 57	⊕ rear drum brake ⊕ 11 ⊕ 1000 kg payload
				PRO	92116603	ø 280 x 24 x 65.5	⊕ 11 + 14 payl.1000 kg→ →payl.1400 kg	Luc		84047901	bore ø 27 ø 254 x 57	⊕ rear drum brake ⊕ 14 ⊕ 1400 kg payload
				PRO	92116703	ø 300 x 24 x 65.5	⊕ 18 ⊕ 1800 kg payload	Luc		84049600	bore ø 28.6 ø 254 x 57	⊕ rear drum brake ⊕ 18 ⊕ 1800 kg payload

→

DUCATO Box (230L) 03/94→04/02

190500												
2.8 TD 4x4	05/98→09/01	90 / 122							Lkh	84060900	bore ø 27 ø 254 x 57	⊕ 10 + 14 ⊕ rear drum brake payl.1000 kg→ →payl.1400 kg
										92116100	ø 280 x 16 x 82	⊕ 11 + 14 payl.1000 kg→ →payl.1400 kg
										92116203	ø 280 x 16 x 82	⊕ 18 ⊕ 1800 kg payload
										94010200	ø 254,0 x 63.5	⊕ rear drum brake ⊕ 11 + 14 payl.1000 kg→ →payl.1400 kg
										94014600	ø 254,0 x 64.5	⊕ rear drum brake ⊕ 18 ⊕ 1800 kg payload
										91062100	ø 172 x 42	
										97035300		

DUCATO Box (244) 04/02→

190600			Bre	2391701	[+] 23917 19.1	⊕ 11 + 15 payl.1000 kg→ →payl.1400 kg	Bre	2392101	[–] 23921 20.1	⊕ rear disc brake
2.0	04/02→	81 / 110								
2.0 4x4	05/02→07/06	81 / 110	Bre	2391901	[+] 23919 19.1	⊕ Maxi ⊕ 1800 kg payload		82061700		⊕ rear disc brake
2.0 Bipower	11/02→	81 / 110								
2.0 JTD	04/02→	62 / 84								
2.3 JTD	04/02→	81 / 110	Bre	82505900				97031300		⊕ rear drum brake
2.3 JTD	12/09→	93 / 126								
2.8 JTD	04/02→	94 / 128								
2.8 JTD 4x4	07/02→	94 / 128		92116603	ø 280 x 24 x 65.5	⊕ 11 + 15 payl.1000 kg→ →payl.1400 kg		92116100	ø 280 x 16 x 82	⊕ rear disc brake ⊕ 11 + 15 payl.1000 kg→ →payl.1400 kg
2.8 JTD Power	05/04→	107 / 146								
2.8 TD	11/03→07/06	90 / 122		92116703	ø 300 x 24 x 65.5	⊕ Maxi ⊕ 1800 kg payload		92116203	ø 280 x 16 x 82	⊕ rear disc brake ⊕ Maxi ⊕ 1800 kg payload
2.8 TD 4x4	11/03→07/06	90 / 122								
2.8 TDS	04/05→	76 / 103						91064800	ø 172 x 42	
								97035300		

DUCATO Box (250) 07/06→

190700			Bre	2446601	[+] 24466 19	⊕ 2000 kg payload	Bos	2446501	[–] 24465 18.8	
100 Multijet 2,2 D	07/06→	74 / 100								
120 Multijet 2,3 D	07/06→	88 / 120	Bre	2446602	[+] 24466 19	⊕ 1700 kg payload ⊕ incr. payload	Bos	82054200		
120 Multijet 2,3 D 4x4	03/10→	88 / 120								
130 Multijet 2,3 D	08/06→	93 / 126								
130 Multijet 2,3 D	01/07→	96 / 131	Bre	2446701	[+] 24467 19	⊕ 2000 kg payload		92157400	ø 280 x 16 x 82	payl.1100 kg→ →payl.1500 kg ⊕ 1700 kg payload ⊖ incr. payload
140 Natural Power	04/09→	100 / 136								
150 Multijet 3,0 D	04/10→	107 / 146	Bre	2446703	[+] 24467 19	⊕ 1700 kg payload ⊕ incr. payload		92157500	ø 280 x 16 x 80	⊕ 1700 kg payload ⊕ incr. payload
160 Multijet 3,0 D	07/06→	115 / 156								
160 Multijet 3,0 D	07/06→	116 / 158	Bre	2446801	[+] 24468 19	payl.1100 kg→ →payl.1500 kg →03/11		92157600	ø 300 x 16 x 80	⊕ 2000 kg payload
			Bre	2446802	[+] 24468 19	⊕ 1700 kg payload ⊖ incr. payload →03/11		91066700	ø 172 x 42	
			Bre	2446901	[+] 24469 19	payl.1100 kg→ →payl.1500 kg 03/11→		97035900		
			Bre	2446902	[+] 24469 19	⊕ 1700 kg payload ⊖ incr. payload 03/11→				
			Bre	82073400		⊕ 1100 kg payload 1500 kg payload				
			Bre	82073700		⊕ 1700 kg payload ⊖ incr. payload				
			Bre	82075800		⊕ 1700 kg payload ⊕ incr. payload				
			Bre	82075900		⊕ 2000 kg payload				
				92157200	ø 280 x 28 x 69.5	⊕ 1700 kg payload ⊖ incr. payload				
				92157300	ø 300 x 32 x 73.5	⊕ 2000 kg payload				
				92116603	ø 280 x 24 x 65.5	payl.1100 kg→ →payl.1500 kg				
				92116703	ø 300 x 24 x 65.5	⊕ 1700 kg payload ⊕ incr. payload				
190800			Bre	2446601	[+] 24466 19	⊕ 2000 kg payload	Bos	2446501	[–] 24465 18.8	
110 Multijet 2,3 D	10/11→	83 / 113								
115 Multijet 2,0 D	06/11→	85 / 116	Bre	2446602	[+] 24466 19	⊕ 1700 kg payload ⊕ incr. payload	Bos	82054200		
150 Multijet 2,3 D	06/11→	109 / 148								
3.0 D Multijet	06/11→	130 / 177	Bre	2446701	[+] 24467 19	⊕ 2000 kg payload		92157400	ø 280 x 16 x 82	payl.1100 kg→ →payl.1500 kg ⊕ 1700 kg payload ⊖ incr. payload
			Bre	2446703	[+] 24467 19	⊕ 1700 kg payload ⊕ incr. payload		92157500	ø 280 x 16 x 80	⊕ 1700 kg payload ⊕ incr. payload
			Bre	2446901	[+] 24469 19	payl.1100 kg→ →payl.1500 kg		92157600	ø 300 x 16 x 80	⊕ 2000 kg payload
			Bre	2446902	[+] 24469 19	⊕ 1700 kg payload ⊖ incr. payload		91066700	ø 172 x 42	
			Bre	82073400		⊕ 1100 kg payload 1500 kg payload		97035900		
			Bre	82073700		⊕ 1700 kg payload ⊖ incr. payload				
			Bre	82075800		⊕ 1700 kg payload ⊕ incr. payload				

DUCATO Box (250) 07/06→

			190800
110 Multijet 2,3 D	10/11→	83 / 113	
115 Multijet 2,0 D	06/11→	85 / 116	
150 Multijet 2,3 D	06/11→	109 / 148	
3.0 D Multijet	06/11→	130 / 177	

Bre		82075900		⊕ 2000 kg payload							
		92157200	ø 280 x 28 x 69.5	⊕ 1700 kg payload ⊖ incr. payload							
		92157300	ø 300 x 32 x 73.5	⊕ 2000 kg payload							
	PRO	92116603	ø 280 x 24 x 65.5	payl.1100 kg→ →payl.1500 kg							
	PRO	92116703	ø 300 x 24 x 65.5	⊕ 1700 kg payload ⊕ incr. payload							

DUCATO Bus (230) 03/94→04/02

			190900
1.9 D	04/98→04/02	50 / 68	
1.9 D	05/98→11/01	59 / 80	
1.9 D Combinato	06/95→04/02	51 / 69	
1.9 TD	04/98→04/02	66 / 90	
1.9 TD Combinato	08/94→04/02	59 / 80	
1.9 TD Panorama/Combinato	03/94→04/02	60 / 82	
2.0 4x4	11/94→11/01	80 / 109	
2.0 Panorama/Combinato	03/94→04/02	80 / 109	
2.5 D	03/94→04/02	55 / 75	
2.5 D Combinato	08/94→04/02	62 / 84	
2.5 TD	03/94→04/02	70 / 95	
2.5 TDI 4x4	04/97→04/02	85 / 116	
2.5 TDI Panorama/Combinato	03/94→04/02	85 / 116	
2.5 TDI Panorama/Combinato	07/94→04/02	80 / 109	
2.8 D	02/98→04/02	64 / 87	
2.8 JTD	11/00→04/02	94 / 128	
2.8 JTD 4x4	11/00→04/02	94 / 128	
2.8 TDI	10/97→04/02	90 / 122	
2.8 TDI 4x4	07/99→04/02	90 / 122	

Luc		2179701	[+] 21797 19.7	⊕ 11 + 14 →08/01 ⊕ round plug ⊕ 1000 kg payload 1400 kg payload	Bre		2392101	[–] 23921 20.1	⊕ rear disc brake 09/01→
Luc		2179901	[+] 21799 19.7	⊕ 18 →08/01 ⊕ round plug ⊕ 1800 kg payload			82061700		⊕ rear disc brake 09/01→
Luc		2360201	[+] 23602 19.7	⊕ 11 + 14 →08/01 ⊕ flat plug ⊕ 1000 kg payload 1400 kg payload	Luc		91047900	ø 254 x 57	⊕ rear drum brake ⊕ 11 + 14 ⊕ 1000 kg payload 1400 kg payload
Luc		2360301	[+] 23603 19.7	⊕ 18 →08/01 ⊕ flat plug ⊕ 1800 kg payload	Luc		91049600	ø 254 x 57	⊕ rear drum brake ⊕ 18 ⊕ 1800 kg payload
Bre		2391701	[+] 23917 19.1	⊕ 11 + 14 09/01→ payl.1000 kg→ →payl.1400 kg	Lkh		91060900	ø 254 x 57	⊕ 10 + 14 ⊕ rear drum brake payl.1000 kg→ →payl.1400 kg
Bre		2391901	[+] 23919 19.1	⊕ 18 09/01→ ⊕ 1800 kg payload	Luc		97010300		Lucas
							97031300		Lockheed
Luc		82063300		→08/01	Luc		84047900	bore ø 25.4 ø 254 x 57	⊕ rear drum brake ⊕ 11 ⊕ 1000 kg payload
	PRO	92073703	ø 280 x 18 x 65.5	⊕ 11 + 14 ⊕ 1000 kg payload 1400 kg payload	Luc		84047901	bore ø 27 ø 254 x 57	⊕ rear drum brake ⊕ 14 ⊕ 1400 kg payload
	PRO	92116603	ø 280 x 24 x 65.5	⊕ 11 + 14 payl.1000 kg→ →payl.1400 kg	Luc		84049600	bore ø 28.6 ø 254 x 57	⊕ rear drum brake ⊕ 18 ⊕ 1800 kg payload
	PRO	92116703	ø 300 x 24 x 65.5	⊕ 18 ⊕ 1800 kg payload	Lkh		84060900	bore ø 27 ø 254 x 57	⊕ 10 + 14 ⊕ rear drum brake payl.1000 kg→ →payl.1400 kg
							92116100	ø 280 x 16 x 82	⊕ 11 + 14 payl.1000 kg→ →payl.1400 kg
						PRO	92116203	ø 280 x 16 x 82	⊕ 18 ⊕ 1800 kg payload
							94010200	ø 254,0 x 63.5	⊕ rear drum brake ⊕ 11 + 14 payl.1000 kg→ →payl.1400 kg
							94014600	ø 254,0 x 64.5	⊕ rear drum brake ⊕ 18 ⊕ 1800 kg payload
							91062100	ø 172 x 42	
							97035300		

			191000
2.0 JTD	10/01→04/02	62 / 84	

Bre		2391701	[+] 23917 19.1	⊕ 11 + 14 payl.1000 kg→ →payl.1400 kg	Bre		2392101	[–] 23921 20.1	⊕ rear disc brake
Bre		2391901	[+] 23919 19.1	⊕ 18 ⊕ 1800 kg payload			82061700		⊕ rear disc brake
	PRO	92073703	ø 280 x 18 x 65.5	⊕ 11 + 14 ⊕ 1000 kg payload 1400 kg payload	Luc		91047900	ø 254 x 57	⊕ rear drum brake ⊕ 11 + 14 ⊕ 1000 kg payload 1400 kg payload
	PRO	92116603	ø 280 x 24 x 65.5	⊕ 11 + 14 payl.1000 kg→ →payl.1400 kg	Luc		91049600	ø 254 x 57	⊕ rear drum brake ⊕ 18 ⊕ 1800 kg payload
	PRO	92116703	ø 300 x 24 x 65.5	⊕ 18 ⊕ 1800 kg payload	Lkh		91060900	ø 254 x 57	⊕ 10 + 14 ⊕ rear drum brake payl.1000 kg→ →payl.1400 kg
					Luc		97010300		Lucas
							97031300		Lockheed
					Luc		84047900	bore ø 25.4 ø 254 x 57	⊕ rear drum brake ⊕ 11 ⊕ 1000 kg payload
					Luc		84047901	bore ø 27 ø 254 x 57	⊕ rear drum brake ⊕ 14 ⊕ 1400 kg payload
					Luc		84049600	bore ø 28.6 ø 254 x 57	⊕ rear drum brake ⊕ 18 ⊕ 1800 kg payload
					Lkh		84060900	bore ø 27 ø 254 x 57	⊕ 10 + 14 ⊕ rear drum brake payl.1000 kg→ →payl.1400 kg
							92116100	ø 280 x 16 x 82	⊕ 11 + 14 payl.1000 kg→ →payl.1400 kg
						PRO	92116203	ø 280 x 16 x 82	⊕ 18 ⊕ 1800 kg payload
							94010200	ø 254,0 x 63.5	⊕ rear drum brake ⊕ 11 + 14 payl.1000 kg→ →payl.1400 kg
							94014600	ø 254,0 x 64.5	⊕ rear drum brake ⊕ 18 ⊕ 1800 kg payload
							91062100	ø 172 x 42	
							97035300		

→

30 kW / hp

DUCATO Bus (230) 03/94→04/02

		191100											
2.5 TD	06/94→09/01	85 / 116	Luc		2179701	[+] 21797 19.7	→12/99 ⊕ 1000 kg payload 1400 kg payload	Luc		91047900	ø 254 x 57	⊕ 1000 kg payload 1400 kg payload	
			Luc		2179901	[+] 21799 19.7	⊕ 1800 kg payload →12/99	Luc		91049600	ø 254 x 57	⊕ 1800 kg payload	
			Luc		2360201	[+] 23602 19.7	⊕ 1000 kg payload 1400 kg payload 12/99→			94010200	ø 254,0 x 63.5	payl.1000 kg→ →payl.1400 kg	
			Luc		2360301	[+] 23603 19.7	12/99→ ⊕ 1800 kg payload			94014600	ø 254,0 x 64.5	⊕ 1800 kg payload	
				PRO	92116603	ø 280 x 24 x 65.5	payl.1000 kg→ →payl.1400 kg						
				PRO	92116703	ø 300 x 24 x 65.5	⊕ 1800 kg payload						
		191200											
2.5 TD 4x4	06/94→09/01	85 / 116	Luc		2179701	[+] 21797 19.7	⊕ 11 + 14 ⊕ round plug ⊕ 1000 kg payload 1400 kg payload	Luc		91047900	ø 254 x 57	⊕ rear drum brake ⊕ 11 + 14 ⊕ 1000 kg payload 1400 kg payload	
			Luc		2179901	[+] 21799 19.7	⊕ 18 ⊕ round plug ⊕ 1800 kg payload	Luc		91049600	ø 254 x 57	⊕ rear drum brake ⊕ 18 ⊕ 1800 kg payload	
			Luc		2360201	[+] 23602 19.7	⊕ 11 + 14 ⊕ flat plug ⊕ 1000 kg payload 1400 kg payload	Lkh		91060900	ø 254 x 57	⊕ 10 + 14 ⊕ rear drum brake payl.1000 kg→ →payl.1400 kg	
			Luc		2360301	[+] 23603 19.7	⊕ 18 ⊕ flat plug ⊕ 1800 kg payload	Luc		97010300		Lucas	
			Luc		82063300					97031300		Lockheed	
				PRO	92073703	ø 280 x 18 x 65.5	⊕ 11 + 14 ⊕ 1000 kg payload 1400 kg payload	Luc		84047900	bore ø 25.4 ø 254 x 57	⊕ rear drum brake ⊕ 11 ⊕ 1000 kg payload	
				PRO	92116603	ø 280 x 24 x 65.5	⊕ 11 + 14 payl.1000 kg→ →payl.1400 kg	Luc		84047901	bore ø 27 ø 254 x 57	⊕ rear drum brake ⊕ 14 ⊕ 1400 kg payload	
				PRO	92116703	ø 300 x 24 x 65.5	⊕ 18 ⊕ 1800 kg payload	Luc		84049600	bore ø 28.6 ø 254 x 57	⊕ rear drum brake ⊕ 18 ⊕ 1800 kg payload	
								Lkh		84060900	bore ø 27 ø 254 x 57	⊕ 10 + 14 ⊕ rear drum brake payl.1000 kg→ →payl.1400 kg	
										94010200	ø 254,0 x 63.5	⊕ rear drum brake ⊕ 11 + 14 payl.1000 kg→ →payl.1400 kg	
										94014600	ø 254,0 x 64.5	⊕ rear drum brake ⊕ 18 ⊕ 1800 kg payload	
										91062100	ø 172 x 42		
										97035300			

DUCATO Bus (244, Z_) 04/02→

		191300											
2.0	04/02→	81 / 110	Bre		2391701	[+] 23917 19.1	⊕ 11 + 15 payl.1000 kg→ →payl.1400 kg	Bre		2392101	[–] 23921 20.1	⊕ rear disc brake	
2.0 4x4	05/02→07/06	81 / 110											
2.0 Bipower	11/02→	81 / 110	Bre		2391901	[+] 23919 19.1	⊕ Maxi ⊕ 1800 kg payload			82061700		⊕ rear disc brake	
2.0 JTD	04/02→	62 / 84											
2.3 JTD	04/02→	81 / 110	Bre		82505900					97031300		⊕ rear drum brake	
2.3 JTD	12/09→	93 / 126											
2.8 JTD	04/02→	94 / 128		PRO	92116603	ø 280 x 24 x 65.5	⊕ 11 + 15 payl.1000 kg→ →payl.1400 kg			92116100	ø 280 x 16 x 82	⊕ rear disc brake ⊕ 11 + 15 payl.1000 kg→ →payl.1400 kg	
2.8 JTD	04/04→07/06	107 / 145											
2.8 JTD 4x4	07/02→	94 / 128		PRO	92116703	ø 300 x 24 x 65.5	⊕ Maxi ⊕ 1800 kg payload			92116203	ø 280 x 16 x 82	⊕ rear disc brake ⊕ Maxi ⊕ 1800 kg payload	
2.8 TD	11/03→07/06	90 / 122											
2.8 TD 4x4	11/03→07/06	90 / 122								91064800	ø 172 x 42		
2.8 TDS	04/05→	76 / 103											
										97035300			

DUCATO Bus (250) 07/06→

		191400	Bre		2446601	[+] 24466 19	⊕ 2000 kg payload	Bos		2446501	[–] 24465 18.8		
100 Multijet 2,2 D	07/06→	74 / 100											
120 Multijet 2,3 D	07/06→	88 / 120	Bre		2446602	[+] 24466 19	⊕ 1700 kg payload ⊕ incr. payload	Bos		82054200			
130 Multijet 2,3 D	01/07→	96 / 131											
130 Multijet 2,3 D	01/10→	93 / 126	Bre		2446701	[+] 24467 19	⊕ 2000 kg payload			92157400	ø 280 x 16 x 82	payl.1100 kg→ →payl.1500 kg ⊕ 1700 kg payload ⊖ incr. payload	
140 Natural Power	04/09→	100 / 136											
150 Multijet 3,0 D	04/10→	107 / 146	Bre		2446703	[+] 24467 19	⊕ 1700 kg payload ⊕ incr. payload			92157500	ø 280 x 16 x 80	⊕ 1700 kg payload ⊕ incr. payload	
160 Multijet 3,0 D	07/06→	116 / 158											
160 Multijet 3,0 D	10/06→	115 / 156	Bre		2446801	[+] 24468 19	payl.1100 kg→ →payl.1500 kg →03/11			92157600	ø 300 x 16 x 80	⊕ 2000 kg payload	
			Bre		2446802	[+] 24468 19	⊕ 1700 kg payload ⊖ incr. payload →03/11			91066700	ø 172 x 42		
			Bre		2446901	[+] 24469 19	payl.1100 kg→ →payl.1500 kg 03/11→			97035900			
			Bre		2446902	[+] 24469 19	⊕ 1700 kg payload ⊖ incr. payload 03/11→						
			Bre		82073400		⊕ 1100 kg payload 1500 kg payload						
			Bre		82073700		⊕ 1700 kg payload ⊖ incr. payload						
			Bre		82075800		⊕ 1700 kg payload ⊕ incr. payload						
			Bre		82075900		⊕ 2000 kg payload						
					92157200	ø 280 x 28 x 69.5	⊕ 1700 kg payload ⊖ incr. payload						

F - H

DUCATO Bus (250) 07/06→

		191400												
100 Multijet 2,2 D	07/06→	74 / 100			92157300	ø 300 x 32 x 73.5	⊕ 2000 kg payload						
120 Multijet 2,3 D	07/06→	88 / 120											
130 Multijet 2,3 D	01/07→	96 / 131		PRO	92116603	ø 280 x 24 x 65.5	payl.1100 kg→ →payl.1500 kg						
130 Multijet 2,3 D	01/10→	93 / 126											
140 Natural Power	04/09→	100 / 136		PRO	92116703	ø 300 x 24 x 65.5	⊕ 1700 kg payload ⊕ incr. payload						
150 Multijet 3,0 D	04/10→	107 / 146											
160 Multijet 3,0 D	07/06→	116 / 158											
160 Multijet 3,0 D	10/06→	115 / 156											
		191500	Bre		2446601	[+] 24466 19	⊕ 2000 kg payload	Bos		2446501	[–] 24465 18.8	
110 Multijet 2,3 D	10/11→	83 / 113										
115 Multijet 2,0 D	06/11→	85 / 116	Bre		2446602	[+] 24466 19	⊕ 1700 kg payload ⊕ incr. payload	Bos		82054200		
3.0 D Multijet	06/11→	130 / 177										
			Bre		2446701	[+] 24467 19	⊕ 2000 kg payload			92157400	ø 280 x 16 x 82	payl.1100 kg→ →payl.1500 kg ⊕ 1700 kg payload ⊖ incr. payload
			Bre		2446703	[+] 24467 19	⊕ 1700 kg payload ⊕ incr. payload			92157500	ø 280 x 16 x 80	⊕ 1700 kg payload ⊕ incr. payload
			Bre		2446901	[+] 24469 19	payl.1100 kg→ →payl.1500 kg			92157600	ø 300 x 16 x 80	⊕ 2000 kg payload
			Bre		2446902	[+] 24469 19	⊕ 1700 kg payload ⊖ incr. payload			91066700	ø 172 x 42	
			Bre		82073400		⊕ 1100 kg payload 1500 kg payload			97035900		
			Bre		82073700		⊕ 1700 kg payload ⊖ incr. payload					
			Bre		82075800		⊕ 1700 kg payload ⊕ incr. payload					
			Bre		82075900		⊕ 2000 kg payload					
					92157200	ø 280 x 28 x 69.5	⊕ 1700 kg payload ⊖ incr. payload					
					92157300	ø 300 x 32 x 73.5	⊕ 2000 kg payload					
				PRO	92116603	ø 280 x 24 x 65.5	payl.1100 kg→ →payl.1500 kg					
				PRO	92116703	ø 300 x 24 x 65.5	⊕ 1700 kg payload ⊕ incr. payload					
		191600	Bre		2446601	[+] 24466 19	⊕ 2000 kg payload	Bos		2446501	[–] 24465 18.8	
150 Multijet 2,3 D	06/11→	109 / 148										
			Bre		2446602	[+] 24466 19	⊕ 1700 kg payload ⊕ incr. payload	Bos		82054200		
			Bre		2446701	[+] 24467 19	⊕ 2000 kg payload			92157400	ø 280 x 16 x 82	payl.1100 kg→ →payl.1500 kg ⊕ 1700 kg payload ⊖ incr. payload
			Bre		2446703	[+] 24467 19	⊕ 1700 kg payload ⊕ incr. payload			92157500	ø 280 x 16 x 80	⊕ 1700 kg payload ⊕ incr. payload
			Bre		2446901	[+] 24469 19	payl.1100 kg→ →payl.1500 kg			92157600	ø 300 x 16 x 80	⊕ 2000 kg payload
			Bre		2446902	[+] 24469 19	⊕ 1000 kg payload 1500 kg payload			91066700	ø 172 x 42	
			Bre		82073400		⊕ 1100 kg payload 1500 kg payload			97035900		
			Bre		82073700		⊕ 1700 kg payload ⊖ incr. payload					
			Bre		82075800		⊕ 1700 kg payload ⊕ incr. payload					
			Bre		82075900		⊕ 2000 kg payload					
					92157200	ø 280 x 28 x 69.5	⊕ 1700 kg payload ⊖ incr. payload					
					92157300	ø 300 x 32 x 73.5	⊕ 2000 kg payload					
				PRO	92116603	ø 280 x 24 x 65.5	payl.1100 kg→ →payl.1500 kg					
				PRO	92116703	ø 300 x 24 x 65.5	⊕ 1700 kg payload ⊕ incr. payload					

DUCATO Kasten (230L) 03/94→04/02 → DUCATO Box (230L), Page 339

DUCATO Kasten (244) 04/02→ → DUCATO Box (244), Page 341

DUCATO Kasten (250) 07/06→ → DUCATO Box (250), Page 341

DUCATO Platform/Chassis (230) 03/94→04/02

		191700	Luc		2179701	[+] 21797 19.7	⊕ 11 + 14 →08/01 ⊕ round plug ⊕ 1000 kg payload 1400 kg payload	Bre		2392101	[–] 23921 20.1	⊕ rear disc brake 09/01→
1.9 D	03/94→04/02	51 / 69										
1.9 D	04/98→04/02	50 / 68								82061700		⊕ rear disc brake 09/01→
1.9 TD	03/94→04/02	60 / 82	Luc		2179901	[+] 21799 19.7	⊕ 18 →08/01 ⊕ round plug ⊕ 1800 kg payload					
1.9 TD	04/98→04/02	66 / 90										
1.9 TD	05/98→11/01	59 / 80						Luc		91047900	ø 254 x 57	⊕ rear drum brake ⊕ 11 + 14 ⊕ 1000 kg payload 1400 kg payload
1.9 TD CAT	08/94→04/02	59 / 80	Luc		2360201	[+] 23602 19.7	⊕ 11 + 14 →08/01 ⊕ flat plug ⊕ 1000 kg payload 1400 kg payload					
2.0	06/98→04/02	80 / 109						Luc		91049600	ø 254 x 57	⊕ rear drum brake ⊕ 18 ⊕ 1800 kg payload
2.0 4x4	11/94→09/01	80 / 109										
2.0 JTD	07/01→04/02	62 / 84	Luc		2360301	[+] 23603 19.7	⊕ 18 →08/01 ⊕ flat plug ⊕ 1800 kg payload					
2.5 D	03/94→04/02	62 / 84						Lkh		91060900	ø 254 x 57	⊕ 10 + 14 ⊕ rear drum brake payl.1000 kg→ →payl.1400 kg
2.5 D 4x4	03/94→04/02	62 / 84										
2.5 TDI	03/94→04/02	80 / 109	Bre		2391701	[+] 23917 19.1	⊕ 11 + 14 09/01→ payl.1000 kg→ →payl.1400 kg					
2.5 TDI	03/94→04/02	85 / 116						Luc		97010300		Lucas
2.5 TDI 4x4	06/98→04/02	85 / 116										

→

DUCATO Platform/Chassis (230) 03/94→04/02

			kW / hp												
2.8 D	02/98→04/02	64 / 87		Bre		2391901	[+] 23919 19.1	⊕ 18 09/01→ ⊕ 1800 kg payload			97031300		Lockheed
2.8 JTD	11/00→04/02	94 / 128											
2.8 JTD	03/01→04/02	94 / 128											
2.8 TD 4x4	05/98→11/01	64 / 87		Luc		82063300		→08/01	Luc		84047900	bore ø 25.4 ø 254 x 57	⊕ rear drum brake ⊕ 11 ⊕ 1000 kg payload
2.8 TDI	12/98→04/02	90 / 122			PRO	92073703	ø 280 x 18 x 65.5	⊕ 11 + 14 ⊕ 1000 kg payload 1400 kg payload	Luc		84047901	bore ø 27 ø 254 x 57	⊕ rear drum brake ⊕ 14 ⊕ 1400 kg payload
					PRO	92116603	ø 280 x 24 x 65.5	⊕ 11 + 14 payl.1000 kg→ →payl.1400 kg	Luc		84049600	bore ø 28.6 ø 254 x 57	⊕ rear drum brake ⊕ 18 ⊕ 1800 kg payload
					PRO	92116703	ø 300 x 24 x 65.5	⊕ 18 ⊕ 1800 kg payload	Lkh		84060900	bore ø 27 ø 254 x 57	⊕ 10 + 14 ⊕ rear drum brake payl.1000 kg→ →payl.1400 kg
											92116100	ø 280 x 16 x 82	⊕ 11 + 14 payl.1000 kg→ →payl.1400 kg
										PRO	92116203	ø 280 x 16 x 82	⊕ 18 ⊕ 1800 kg payload
											94010200	ø 254,0 x 63.5	⊕ rear drum brake ⊕ 11 + 14 payl.1000 kg→ →payl.1400 kg
											94014600	ø 254,0 x 64.5	⊕ rear drum brake ⊕ 18 ⊕ 1800 kg payload
											91062100	ø 172 x 42	
											97035300		
		191800		Luc		2179701	[+] 21797 19.7	⊕ 11 + 14 ⊕ round plug ⊕ 1000 kg payload 1400 kg payload	Luc		91047900	ø 254 x 57	⊕ rear drum brake ⊕ 11 + 14 ⊕ 1000 kg payload 1400 kg payload
2.8 iDTD 4x4	05/98→09/01	90 / 122		Luc		2179901	[+] 21799 19.7	⊕ 18 ⊕ round plug ⊕ 1800 kg payload	Luc		91049600	ø 254 x 57	⊕ rear drum brake ⊕ 18 ⊕ 1800 kg payload
				Luc		2360201	[+] 23602 19.7	⊕ 11 + 14 ⊕ flat plug ⊕ 1000 kg payload 1400 kg payload	Lkh		91060900	ø 254 x 57	⊕ 10 + 14 ⊕ rear drum brake payl.1000 kg→ →payl.1400 kg
				Luc		2360301	[+] 23603 19.7	⊕ 18 ⊕ flat plug ⊕ 1800 kg payload	Luc		97010300		Lucas
				Luc		82063300		→08/01			97031300		Lockheed
					PRO	92073703	ø 280 x 18 x 65.5	⊕ 11 + 14 ⊕ 1000 kg payload 1400 kg payload	Luc		84047900	bore ø 25.4 ø 254 x 57	⊕ rear drum brake ⊕ 11 ⊕ 1000 kg payload
					PRO	92116603	ø 280 x 24 x 65.5	⊕ 11 + 14 payl.1000 kg→ →payl.1400 kg	Luc		84047901	bore ø 27 ø 254 x 57	⊕ rear drum brake ⊕ 14 ⊕ 1400 kg payload
					PRO	92116703	ø 300 x 24 x 65.5	⊕ 18 ⊕ 1800 kg payload	Luc		84049600	bore ø 28.6 ø 254 x 57	⊕ rear drum brake ⊕ 18 ⊕ 1800 kg payload
									Lkh		84060900	bore ø 27 ø 254 x 57	⊕ 10 + 14 ⊕ rear drum brake payl.1000 kg→ →payl.1400 kg
											92116100	ø 280 x 16 x 82	⊕ 11 + 14 payl.1000 kg→ →payl.1400 kg
										PRO	92116203	ø 280 x 16 x 82	⊕ 18 ⊕ 1800 kg payload
											94010200	ø 254,0 x 63.5	⊕ rear drum brake ⊕ 11 + 14 payl.1000 kg→ →payl.1400 kg
											94014600	ø 254,0 x 64.5	⊕ rear drum brake ⊕ 18 ⊕ 1800 kg payload
											91062100	ø 172 x 42	
											97035300		
		191900		Luc		2179701	[+] 21797 19.7	⊕ 11 + 14 →11/01 ⊕ round plug ⊕ 1000 kg payload 1400 kg payload	Bre		2392101	[–] 23921 20.1	⊕ rear disc brake 12/01→
2.8 JTD 4x4	10/01→04/02	94 / 128		Luc		2179901	[+] 21799 19.7	⊕ 18 →11/01 ⊕ round plug ⊕ 1800 kg payload	Luc		91047900	ø 254 x 57	⊕ rear drum brake ⊕ 11 + 14 ⊕ 1000 kg payload 1400 kg payload
				Luc		2360201	[+] 23602 19.7	⊕ 11 + 14 →11/01 ⊕ flat plug ⊕ 1000 kg payload 1400 kg payload	Luc		91049600	ø 254 x 57	⊕ rear drum brake ⊕ 18 ⊕ 1800 kg payload
									Lkh		91060900	ø 254 x 57	⊕ 10 + 14 ⊕ rear drum brake payl.1000 kg→ →payl.1400 kg
				Luc		2360301	[+] 23603 19.7	⊕ 18 →11/01 ⊕ flat plug ⊕ 1800 kg payload	Luc		84047900	bore ø 25.4 ø 254 x 57	⊕ rear drum brake ⊕ 11 ⊕ 1000 kg payload
				Bre		2391701	[+] 23917 19.1	⊕ 11 + 14 12/01→ payl.1000 kg→ →payl.1400 kg	Luc		84047901	bore ø 27 ø 254 x 57	⊕ rear drum brake ⊕ 14 ⊕ 1400 kg payload
				Bre		2391901	[+] 23919 19.1	⊕ 18 12/01→ ⊕ 1800 kg payload	Luc		84049600	bore ø 28.6 ø 254 x 57	⊕ rear drum brake ⊕ 18 ⊕ 1800 kg payload
					PRO	92116603	ø 280 x 24 x 65.5	⊕ 11 + 14 payl.1000 kg→ →payl.1400 kg	Lkh		84060900	bore ø 27 ø 254 x 57	⊕ 10 + 14 ⊕ rear drum brake payl.1000 kg→ →payl.1400 kg
					PRO	92116703	ø 300 x 24 x 65.5	⊕ 18 ⊕ 1800 kg payload			92116100	ø 280 x 16 x 82	⊕ 11 + 14 payl.1000 kg→ →payl.1400 kg
										PRO	92116203	ø 280 x 16 x 82	⊕ 18 ⊕ 1800 kg payload
											94010200	ø 254,0 x 63.5	⊕ rear drum brake ⊕ 11 + 14 payl.1000 kg→ →payl.1400 kg
											94014600	ø 254,0 x 64.5	⊕ rear drum brake ⊕ 18 ⊕ 1800 kg payload
											91064800	ø 172 x 42	

		kW / hp											
DUCATO Platform/Chassis (244) 04/02→07/06													
		192000	Bre		**2391701**	[+] 23917 19.1	⊕ 11 + 15 payl.1000 kg→ →payl.1400 kg	Bre		**2392101**	[–] 23921 20.1	⊕ rear disc brake
2.0	04/02→07/06	81 / 110	Bre		**2391901**	[+] 23919 19.1	⊕ Maxi ⊕ 1800 kg payload			**91064800**	ø 172 x 42	
				PRO	**92116603**	ø 280 x 24 x 65.5	⊕ 11 + 15 payl.1000 kg→ →payl.1400 kg			**97035300**		
				PRO	**92116703**	ø 300 x 24 x 65.5	⊕ Maxi ⊕ 1800 kg payload					
		192100	Bre		**2391701**	[+] 23917 19.1	⊕ 11 + 15 payl.1000 kg→ →payl.1400 kg	Bre		**2392101**	[–] 23921 20.1	⊕ rear disc brake
2.0 JTD	04/02→07/06	62 / 84										
2.3 JTD	04/02→07/06	81 / 110										
2.3 JTD	12/09→	93 / 126	Bre		**2391901**	[+] 23919 19.1	⊕ Maxi ⊕ 1800 kg payload			**82061700**		⊕ rear disc brake
2.8 JTD	04/02→07/06	94 / 128										
2.8 JTD	11/03→07/06	90 / 122	Bre		**82505900**					**97031300**		⊕ rear drum brake
2.8 JTD 4x4	10/02→07/06	94 / 128										
2.8 JTD 4x4	11/03→07/06	90 / 122										
2.8 JTD Power	05/04→07/06	107 / 146		PRO	**92116603**	ø 280 x 24 x 65.5	⊕ 11 + 15 payl.1000 kg→ →payl.1400 kg			**92116100**	ø 280 x 16 x 82	⊕ rear disc brake ⊕ 11 + 15 payl.1000 kg→ →payl.1400 kg
2.8 TDS	04/05→07/06	76 / 103		PRO	**92116703**	ø 300 x 24 x 65.5	⊕ Maxi ⊕ 1800 kg payload		PRO	**92116203**	ø 280 x 16 x 82	⊕ rear disc brake ⊕ Maxi ⊕ 1800 kg payload
										91064800	ø 172 x 42	
										97035300		
DUCATO Platform/Chassis (250) 07/06→												
		192200	Bre		**2446601**	[+] 24466 19	⊕ 2000 kg payload	Bos		**2446501**	[–] 24465 18.8	
100 Multijet 2,2 D	07/06→	74 / 100										
120 Multijet 2,3 D	07/06→	88 / 120	Bre		**2446602**	[+] 24466 19	⊕ 1700 kg payload ⊕ incr. payload	Bos		**82054200**		
120 Multijet 2,3 D	03/10→	88 / 120										
130 Multijet 2,3 D	01/07→	96 / 131										
150 Multijet 3,0 D	04/10→	107 / 146	Bre		**2446701**	[+] 24467 19	⊕ 2000 kg payload			**92157400**	ø 280 x 16 x 82	payl.1100 kg→ →payl.1500 kg ⊕ 1700 kg payload ⊖ incr. payload
160 Multijet 3,0 D	07/06→	116 / 158	Bre		**2446703**	[+] 24467 19	⊕ 1700 kg payload ⊕ incr. payload			**92157500**	ø 280 x 16 x 80	⊕ 1700 kg payload ⊕ incr. payload
			Bre		**2446801**	[+] 24468 19	payl.1100 kg→ →payl.1500 kg →03/11			**92157600**	ø 300 x 16 x 80	⊕ 2000 kg payload
			Bre		**2446802**	[+] 24468 19	⊕ 1700 kg payload ⊖ incr. payload →03/11			**91066700**	ø 172 x 42	
			Bre		**2446901**	[+] 24469 19	payl.1100 kg→ →payl.1500 kg 03/11→			**97035900**		
			Bre		**2446902**	[+] 24469 19	⊕ 1700 kg payload ⊖ incr. payload 03/11→					
			Bre		**82073400**		⊕ 1100 kg payload 1500 kg payload					
			Bre		**82073700**		⊕ 1700 kg payload ⊖ incr. payload					
			Bre		**82075800**		⊕ 1700 kg payload ⊕ incr. payload					
			Bre		**82075900**		⊕ 2000 kg payload					
					92157200	ø 280 x 28 x 69.5	⊕ 1700 kg payload ⊖ incr. payload					
					92157300	ø 300 x 32 x 73.5	⊕ 2000 kg payload					
				PRO	**92116603**	ø 280 x 24 x 65.5	payl.1100 kg→ →payl.1500 kg					
				PRO	**92116703**	ø 300 x 24 x 65.5	⊕ 1700 kg payload ⊕ incr. payload					
		192300	Bre		**2446601**	[+] 24466 19	⊕ 2000 kg payload	Bos		**2446501**	[–] 24465 18.8	
110 Multijet 2,3 D	10/11→	83 / 113										
115 Multijet 2,0 D	06/11→	85 / 116	Bre		**2446602**	[+] 24466 19	⊕ 1700 kg payload ⊕ incr. payload	Bos		**82054200**		
150 Multijet 2,3 D	06/11→	109 / 148										
3.0 D Multijet	06/11→	130 / 177	Bre		**2446701**	[+] 24467 19	⊕ 2000 kg payload			**92157400**	ø 280 x 16 x 82	payl.1100 kg→ →payl.1500 kg ⊕ 1700 kg payload ⊖ incr. payload
			Bre		**2446703**	[+] 24467 19	⊕ 1700 kg payload ⊕ incr. payload			**92157500**	ø 280 x 16 x 80	⊕ 1700 kg payload ⊕ incr. payload
			Bre		**2446901**	[+] 24469 19	payl.1100 kg→ →payl.1500 kg			**92157600**	ø 300 x 16 x 80	⊕ 2000 kg payload
			Bre		**2446902**	[+] 24469 19	⊕ 1700 kg payload ⊖ incr. payload			**91066700**	ø 172 x 42	
			Bre		**82073400**		⊕ 1100 kg payload 1500 kg payload			**97035900**		
			Bre		**82073700**		⊕ 1700 kg payload ⊖ incr. payload					
			Bre		**82075800**		⊕ 1700 kg payload ⊕ incr. payload					
			Bre		**82075900**		⊕ 2000 kg payload					
					92157200	ø 280 x 28 x 69.5	⊕ 1700 kg payload ⊖ incr. payload					
					92157300	ø 300 x 32 x 73.5	⊕ 2000 kg payload					

→

		kW / hp											
DUCATO Platform/Chassis (250) 07/06→													
		192300											
110 Multijet 2,3 D	10/11→	83 / 113		PRO	92116603	ø 280 x 24 x 65.5	payl.1100 kg→ →payl.1500 kg						
115 Multijet 2,0 D	06/11→	85 / 116		PRO	92116703	ø 300 x 24 x 65.5	⊕ 1700 kg payload ⊕ incr. payload						
150 Multijet 2,3 D	06/11→	109 / 148											
3.0 D Multijet	06/11→	130 / 177											
		192400	Bre		2446601	[+] 24466 19	⊕ 2000 kg payload	Bos		2446501	[–] 24465 18.8		
130 Multijet 2,3 D	08/06→	93 / 126											
140 Natural Power	04/09→	100 / 136	Bre		2446602	[+] 24466 19	⊕ 1700 kg payload ⊕ incr. payload			92157400	ø 280 x 16 x 82	payl.1100 kg→ →payl.1500 kg ⊕ 1700 kg payload ⊖ incr. payload	
160 Multijet 3,0 D	07/06→	115 / 156	Bre		2446701	[+] 24467 19	⊕ 2000 kg payload			92157500	ø 280 x 16 x 80	⊕ 1700 kg payload ⊕ incr. payload	
			Bre		2446703	[+] 24467 19	⊕ 1700 kg payload ⊕ incr. payload			92157600	ø 300 x 16 x 80	⊕ 2000 kg payload	
			Bre		2446801	[+] 24468 19	payl.1100 kg→ →payl.1500 kg →03/11			91066700	ø 172 x 42		
			Bre		2446802	[+] 24468 19	⊕ 1700 kg payload ⊖ incr. payload →03/11						
			Bre		2446901	[+] 24469 19	payl.1100 kg→ →payl.1500 kg 03/11→						
			Bre		2446902	[+] 24469 19	⊕ 1700 kg payload ⊖ incr. payload 03/11→						
					92157200	ø 280 x 28 x 69.5	⊕ 1700 kg payload ⊖ incr. payload						
					92157300	ø 300 x 32 x 73.5	⊕ 2000 kg payload						
				PRO	92116603	ø 280 x 24 x 65.5	payl.1100 kg→ →payl.1500 kg						
				PRO	92116703	ø 300 x 24 x 65.5	⊕ 1700 kg payload ⊕ incr. payload						
DUCATO Pritsche/Fahrgestell (230) 03/94→04/02 → DUCATO Platform/Chassis (230), Page 344													
DUCATO Pritsche/Fahrgestell (244) 04/02→07/06 → DUCATO Platform/Chassis (244), Page 346													
DUCATO Pritsche/Fahrgestell (250) 07/06→ → DUCATO Platform/Chassis (250), Page 346													
FIORINO Box (146) 01/88→05/01													
		192500	Ben		2007304	[–] 20073 17.3	Bendix →08/88	Ben		91005900	ø 185 x 31	→08/93	
1.7 D	01/88→10/99	44 / 60											
60 1.7 D	05/88→05/00	44 / 60	Ate		2119301	[–] 21193 18	09/88→ →08/93	Ben		91037000	ø 228.6 x 42	09/93→	
			Ate		2196201	[–] 21962 18	09/93→	Fia		97005500		→08/93	
			Ate		2119501	[+] 21195 18	09/88→ →08/93	Ben		97006700		09/93→	
			Ben		82027000		→08/88			94006400	ø 185,3 x 35.7	→08/93	
			Ate		82027100		09/88→			94014000	ø 228,3 x 48	09/93→	
			Ate		82062900		Teves						
					92019300	ø 227 x 10.8 x 45.8	→08/88						
					92034500	ø 240 x 12 x 46.5	09/88→						
		192600	Ate		2196201	[–] 21962 18		Ben		91037000	ø 228.6 x 42		
1.7 TD	11/96→05/00	46 / 63											
65 1.7 TD	01/97→05/01	46 / 63	Ate		82027100			Ben		97006700			
70 i.e. 1.4	05/94→05/01	49 / 67											
75 i.e. 1.6	10/93→05/01	55 / 75	Ate		82062900					94014000	ø 228,3 x 48		
					92034500	ø 240 x 12 x 46.5							
FIORINO Box Body / Estate (225) 11/07→													
		192700	Bos		2397903	[+] 23979 17.8				91067600	ø 228.6 x 42		
1.3 D Multijet	11/07→	55 / 75											
			Bos		82054300			Lkh		97030900			
				PRO	92069603	ø 257 x 22 x 40.5				94014000	ø 228,3 x 48		
		192800	Bos		2370901	[+] 23709 19				91067600	ø 228.6 x 42		
1.3 D Multijet	07/09→	70 / 95		PRO	92053503	ø 284 x 22 x 43.5		Lkh		97030900			
										94014000	ø 228,3 x 48		
		192900	Bos		2397903	[+] 23979 17.8				91065300	ø 203.2 x 38		
1.3 Flex	02/08→	52 / 71											
1.4	11/07→	54 / 73	Bos		82054300					97031600			
				PRO	92069603	ø 257 x 22 x 40.5				83065300	bore ø 20.6 ø 203.2 x 38		

F - H

30 kW / hp												
FIORINO Box Body / Estate (225) 11/07→												
192900									Lkh	84065301	bore ø 20.6 ø 203.2 x 38	
1.3 Flex	02/08→	52 / 71							Lkh	84065300	bore ø 19 ø 203.2 x 38	
1.4	11/07→	54 / 73								94019900	ø 203,2 x 48.5	
193000			Bos	2397901	[+] 23979 17.8		Lkh	97030900				
1.4 Natural Power	10/09→	57 / 78	Bos	82054300				94014000	ø 228,3 x 48			
			PRO	92069603	ø 257 x 22 x 40.5							
FIORINO Kasten/Kombi (225) 11/07→ → FIORINO Box Body / Estate (225), Page 347												
FIORINO Kasten (146) 01/88→05/01 → FIORINO Box (146), Page 347												
FIORINO Pick up (146) 05/88→05/01												
193100			Ate	2196201	[–] 21962 18		Ben	91037000	ø 228.6 x 42			
1.4	05/94→05/01	49 / 67	Ate	82027100			Ben	97006700				
1.6	01/94→05/01	55 / 75	Ate	82062900				94014000	ø 228,3 x 48			
1.7 D	10/93→10/99	42 / 57		92034500	ø 240 x 12 x 46.5							
1.7 TD	01/97→05/01	46 / 63										
193200			Ben	2007304	[–] 20073 17.3	Bendix →08/88	Ben	91005900	ø 185 x 31	→08/93		
1.7 D	05/88→10/99	44 / 60	Ate	2119301	[–] 21193 18	09/88→ →08/93	Ben	91037000	ø 228.6 x 42	09/93→		
			Ate	2196201	[–] 21962 18	09/93→	Fia	97005500		→08/93		
			Ate	2119501	[+] 21195 18	09/88→ →08/93	Ben	97006700		09/93→		
			Ben	82027000		→08/88		94006400	ø 185,3 x 35.7	→08/93		
			Ate	82027100		09/88→		94014000	ø 228,3 x 48	09/93→		
			Ate	82062900		Teves						
				92019300	ø 227 x 10.8 x 45.8	→08/88						
				92034500	ø 240 x 12 x 46.5	09/88→						
FREEMONT (JC) 08/11→												
193300			Bos	2460401	[+] 24604 18.5		Luc	2482201	[+] 24822 17	BRF -brake		
2.0 JTD	08/11→	100 / 136	Ake	2537801	[+] 25378 18.1	BRE -brake	TRW	2537601	[+] 25376 17.6	BRE -brake		
2.0 JTD	08/11→	103 / 140										
2.0 JTD	08/11→	120 / 163										
2.0 JTD	08/11→	125 / 170										
2.0 JTD 4x4	08/11→	120 / 163										
2.0 JTD 4x4	08/11→	125 / 170										
2.4	08/11→	125 / 170										
2.4	08/11→	127 / 173										
2.4 Flexfuel	01/12→	127 / 173										
3.6	08/11→	206 / 280										
3.6 4x4	08/11→	206 / 280	PRO	92181503	ø 302 x 28 x 38.2	BRF -brake	PRO	92181003	ø 305 x 12 x 33	BRF -brake		
IDEA 12/03→												
193400			Bos	2370503	[–] 23705 17.8			91061100	ø 203.2 x 38	→06/05 Lockheed		
1.2 16V	01/04→	59 / 80	Bos	2370502	[+] 23705 17.8			91065300	ø 203.2 x 38	07/05→ Lockheed		
1.3 JTD	01/04→	51 / 70	Bos epad	2370581	[+] 23705 17.8		Lkh	97015200				
1.4 16V	01/04→	70 / 95	Bos	82054200				97031500		07/05→		
			PRO	92069603	ø 257 x 22 x 40.5		Lkh	84061101	bore ø 22.2 ø 203.2 x 38			
								94019900	ø 203,2 x 48.5			
193500			Bos	2370803	[–] 23708 19	→12/05		91062000	ø 228.6 x 42	Lockheed		
1.3 D Multijet	10/05→	66 / 90	Bos	2370803	[–] 23708 19	⊕ classic line	Lkh	97015200				
			Bos	2370802	[+] 23708 19	01/06→	Lkh	97030900				
			Bos epad	2370881	[+] 23708 19	01/06→		94019900	ø 203,2 x 48.5			
			Bos	82054200								
			PRO	92069603	ø 257 x 22 x 40.5							

→

		kW / hp										
IDEA 12/03→												
		193600	Bos		2370502	[+] 23705 17.8				91065300	ø 203.2 x 38	Lockheed
1.3 D Multijet	05/08→	70 / 95										
1.4	01/06→	60 / 82	Bos	epad	2370581	[+] 23705 17.8		Lkh		97015200		
1.4	08/10→	59 / 78										
1.4 LPG	03/09→	57 / 78	Bos		82054200					94019900	ø 203,2 x 48.5	
				PRO	92069603	ø 257 x 22 x 40.5						
		193700	Bos		2370502	[+] 23705 17.8				91061100	ø 203.2 x 38	→06/05 Lockheed
1.4	12/03→	66 / 90										
			Bos	epad	2370581	[+] 23705 17.8				91065300	ø 203.2 x 38	07/05→ Lockheed
			Bos		82054200			Lkh		97015200		
				PRO	92069603	ø 257 x 22 x 40.5				97031500		07/05→
										94019900	ø 203,2 x 48.5	
		193800	Bos		2370503	[–] 23705 17.8				91065300	ø 203.2 x 38	Lockheed
1.4	10/05→	57 / 77	Bos		2370502	[+] 23705 17.8		Lkh		97015200		
			Bos	epad	2370581	[+] 23705 17.8				97031500		
			Bos		82054200					94019900	ø 203,2 x 48.5	
				PRO	92069603	ø 257 x 22 x 40.5						
		193900	Bos		2370502	[+] 23705 17.8				97031500		
1.4 Flex	09/05→	60 / 82	Bos	epad	2370581	[+] 23705 17.8				94019900	ø 203,2 x 48.5	
				PRO	92069603	ø 257 x 22 x 40.5						
		194000	Bos		2370803	[–] 23708 19		Luc		2360102	[–] 23601 13.7	
1.6	08/10→	85 / 116										
1.6 D Multijet	05/08→	88 / 120	Bos		2370803	[–] 23708 19	⊕ classic line	Luc		82060100		
			Bos		2370802	[+] 23708 19			PRO	92061103	ø 240 x 11 x 40	
			Bos	epad	2370881	[+] 23708 19						
			Bos		82054200							
				PRO	92053503	ø 284 x 22 x 43.5						
		194100	Bos		2370802	[+] 23708 19		Luc		2360102	[–] 23601 13.7	
1.6 Flex	08/10→	86 / 117	Bos	epad	2370881	[+] 23708 19			PRO	92061103	ø 240 x 11 x 40	
				PRO	92053503	ø 284 x 22 x 43.5						
		194200	Bos		2370803	[–] 23708 19	⊕ classic line			91062000	ø 228.6 x 42	
1.8	09/05→07/10	82 / 112										
1.8	09/07→12/08	85 / 115	Bos		2370802	[+] 23708 19		Lkh		97030900		
1.8	01/08→07/10	81 / 110										
1.8 Flex	09/05→07/10	82 / 112										
1.8 Flex	01/06→	84 / 114	Bos	epad	2370881	[+] 23708 19				84062000	bore ø 20.6 ø 228.6 x 42	
1.8 Flex	08/10→	97 / 132										
			Bos		82054200					94014000	ø 228,3 x 48	
				PRO	92053503	ø 284 x 22 x 43.5						
		194300	Bos		2370803	[–] 23708 19	→12/05			91062000	ø 228.6 x 42	
1.9 JTD	01/04→	74 / 101	Bos		2370803	[–] 23708 19	⊕ classic line	Lkh		97030900		07/05→
			Bos		2370802	[+] 23708 19	01/06→			84062000	bore ø 20.6 ø 228.6 x 42	
			Bos	epad	2370881	[+] 23708 19	01/06→			94014000	ø 228,3 x 48	
			Bos		82054200							
				PRO	92053503	ø 284 x 22 x 43.5						
LINEA (323) 06/07→												
		194400	Bos		2370502	[+] 23705 17.8				91065400	ø 228.6 x 42	
1.3 D Multijet	06/07→	66 / 90										
1.4	06/07→	57 / 77	Bos	epad	2370581	[+] 23705 17.8				97031500		

		kW / hp												
LINEA (323) 06/07→														
		194400	Bos		2370601	[+] 23706 17.8				83065401	bore ø 20.6 ø 228.6 x 42	
1.3 D Multijet	06/07→	66 / 90										
1.4	06/07→	57 / 77	Bos		82054200					84065400	bore ø 20.6 ø 228.6 x 42	
				PRO	92069603	ø 257 x 22 x 40.5				94014000	ø 228,3 x 48	
		194500	Bos		2370502	[+] 23705 17.8				91065400	ø 228.6 x 42	
1.3 D Multijet	11/08→	68 / 93										
1.3 D Multijet	09/09→	70 / 95	Bos	epad	2370581	[+] 23705 17.8				97031500		
1.4	12/08→	66 / 90										
			Bos		82054200					83065401	bore ø 20.6 ø 228.6 x 42	
				PRO	92069603	ø 257 x 22 x 40.5				84065400	bore ø 20.6 ø 228.6 x 42	
										94014000	ø 228,3 x 48	
		194600	Bos		2370802	[+] 23708 19			Luc	2351703	[–] 23517 16.5	
1.4 T-Jet	09/07→	84 / 114										
1.4 T-Jet	09/07→	88 / 120	Bos	epad	2370881	[+] 23708 19			Luc	82060100		
1.6 D Multijet	06/09→	77 / 105										
			Bos		82054200					92034203	ø 251 x 10 x 50.5	
				PRO	92053503	ø 284 x 22 x 43.5						
		194700	Bos		2370802	[+] 23708 19			Luc	2351703	[–] 23517 16.5	
1.4 T-Jet	10/08→	112 / 152										
			Bos	epad	2370881	[+] 23708 19				92034203	ø 251 x 10 x 50.5	
			Bos		82514000							
				PRO	92053503	ø 284 x 22 x 43.5						
		194800	Bos		2370901	[+] 23709 19			Luc	2351703	[–] 23517 16.5	
1.6	07/08→	80 / 109										
			Bos		82054200				Luc	82060100		
				PRO	92053503	ø 284 x 22 x 43.5				92034203	ø 251 x 10 x 50.5	
		194900	Bos		2370803	[–] 23708 19			Luc	2351703	[–] 23517 16.5	
1.8	09/10→	96 / 131										
1.8 Flex	09/10→	93 / 126										
1.9 16V	07/08→	94 / 128	Bos		82054200				Luc	82060100		
1.9 16V	06/09→	93 / 126										
1.9 16V	09/10→	97 / 132		PRO	92053503	ø 284 x 22 x 43.5				92034203	ø 251 x 10 x 50.5	
1.9 Flex	10/08→08/10	97 / 132										
		195000	Bos		2370803	[–] 23708 19			Luc	2351703	[–] 23517 16.5	
1.8 Flex	09/10→	97 / 132										
				PRO	92053503	ø 284 x 22 x 43.5				92034203	ø 251 x 10 x 50.5	
MAREA (185) 09/96→08/02														
		195100	Ate		2193002	[+] 21930 17.9			Ben	91046500	ø 203.2 x 39	Bendix
1.2 16V	10/98→05/02	60 / 82										
1.4 80 12V	09/96→05/02	59 / 80	Ate		82030900				Lkh	91053600	ø 203.2 x 38	Lockheed
1.6 100 16V	09/96→05/02	76 / 103										
1.9 TD 75	09/96→05/02	55 / 75	Ate		82062900				Ben	97005100		Bendix
				PRO	92041503	ø 257 x 12 x 40.5			Lkh	97015200		
									Ben	84046501	bore ø 22.2 ø 203.2 x 39	Bendix
									Lkh	84053600	bore ø 22.2 ø 203.2 x 38	Lockheed
									Lkh	84053601	bore ø 22.2 ø 203.2 x 38	04/00→
										94019900	ø 203,2 x 48.5	
		195200	Ate		2192701	[+] 21927 17.9			Ben	91037000	ø 228.6 x 42	Bendix
1.6	03/99→08/00	68 / 92										
1.6	09/00→08/02	76 / 103	Ate		82030900				Lkh	91053100	ø 228.6 x 42	Lockheed
1.6 100 16V Bipower	04/99→05/02	76 / 103										
1.6 SX	09/00→08/02	72 / 98	Ate		82062900				Ben	97006700		Bendix
				PRO	92068503	ø 257 x 20 x 40.5			Lkh	97015200		
									Ben	84037001	bore ø 20.6 ø 228.6 x 42	Bendix
									Lkh	84053102	bore ø 20.6 ø 228.6 x 42	Lockheed
										94014000	ø 228,3 x 48	

→

		kW / hp											
MAREA (185) 09/96→08/02													
		195300	Ate		2193002	[+] 21930 17.9	⊕ Classic line	Ben		91046500	ø 203.2 x 39	
1.6 16V	04/97→02/99	75 / 102	Ate		82032000			Lkh		91053600	ø 203.2 x 38	
										94019900	ø 203,2 x 48.5	
		195400	Ate		2192701	[+] 21927 17.9		Ben		91046500	ø 203.2 x 39	Bendix
1.8 115 16V	09/96→05/02	83 / 113										
1.9 JTD 105	04/99→01/01	77 / 105	Ate		82030900			Lkh		91053600	ø 203.2 x 38	Lockheed
1.9 TD 100	09/96→05/02	74 / 100	Ate		82062900			Ben		97005100		Bendix
				PRO	92068503	ø 257 x 20 x 40.5		Lkh		97015200		
								Ben		84046501	bore ø 22.2 ø 203.2 x 39	Bendix
								Lkh		84053600	bore ø 22.2 ø 203.2 x 38	Lockheed
								Lkh		84053601	bore ø 22.2 ø 203.2 x 38	04/00→
										94019900	ø 203,2 x 48.5	
		195500	Ate		2192701	[+] 21927 17.9		Ben		91046500	ø 203.2 x 39	Bendix
1.9 JTD 110	01/01→05/02	81 / 110	Ate		82030900			Lkh		91053600	ø 203.2 x 38	Lockheed
			Ate		82062900			Ben		97005100		Bendix
				PRO	92068503	ø 257 x 20 x 40.5		Lkh		97015200		
								Ben		84046501	bore ø 22.2 ø 203.2 x 39	Bendix
								Lkh		84053600	bore ø 22.2 ø 203.2 x 38	Lockheed
								Lkh		84053601	bore ø 22.2 ø 203.2 x 38	
										94019900	ø 203,2 x 48.5	
		195600	Ate		2328902	[+] 23289 19		Luc		2317703	[–] 23177 14.4	
2.0 150 20V	09/96→04/99	108 / 147	Ate		82032000			Luc		82037300		
2.4 TD 125	09/96→04/99	91 / 125	Ate		82062900			Luc		82062800		
				PRO	92053503	ø 284 x 22 x 43.5			PRO	92061103	ø 240 x 11 x 40	
		195700	Ate		2322201	[+] 23222 19		Luc		2317703	[–] 23177 14.4	
2.0 150 20V	01/01→05/02	110 / 150	Ate		82032000			Luc		82037300		
			Ate		82062900			Luc		82062800		
				PRO	92053503	ø 284 x 22 x 43.5			PRO	92061103	ø 240 x 11 x 40	
		195800	Ate		2322201	[+] 23222 19	04/00→	Luc		2317703	[–] 23177 14.4	
2.0 155 20V	04/99→01/01	113 / 154	Ate		2328902	[+] 23289 19	→03/00	Luc		82037300		
2.4 JTD 130	04/99→05/02	96 / 130	Ate		82032000			Luc		82062800		
			Ate		82062900				PRO	92061103	ø 240 x 11 x 40	
				PRO	92053503	ø 284 x 22 x 43.5						
MAREA Weekend (185) 09/96→02/03													
		195900	Ate		2192701	[+] 21927 17.9		Ben		91046500	ø 203.2 x 39	Bendix
1.2 16V	10/98→05/02	60 / 82	Ate		82030900			Lkh		91053600	ø 203.2 x 38	Lockheed
1.4 80 12V	09/96→05/02	59 / 80	Ate		82062900			Ben		97005100		Bendix
				PRO	92068503	ø 257 x 20 x 40.5		Lkh		97015200		
								Ben		84046501	bore ø 22.2 ø 203.2 x 39	Bendix
								Lkh		84053600	bore ø 22.2 ø 203.2 x 38	Lockheed
										94019900	ø 203,2 x 48.5	

		kW / hp												
MAREA Weekend (185) 09/96→02/03														
		196000	Ate		**2192701**	[+] 21927 17.9		Ben		**91037000**	ø 228.6 x 42	Bendix
1.6	09/00→08/02	76 / 103										
1.8 115 16V	09/96→05/02	83 / 113	Ate		**82030900**			Lkh		**91053100**	ø 228.6 x 42	Lockheed
1.9 JTD 110	01/01→05/02	81 / 110										
1.9 TD 75	09/96→05/02	55 / 75	Ate		**82062900**			Ben		**97006700**		Bendix
				PRO	**92068503**	ø 257 x 20 x 40.5		Lkh		**97015200**		
								Ben		**84037001**	bore ø 20.6 ø 228.6 x 42	Bendix
								Lkh		**84053102**	bore ø 20.6 ø 228.6 x 42	Lockheed
										94014000	ø 228,3 x 48	
		196100	Ate		**2192701**	[+] 21927 17.9		Ben		**91037000**	ø 228.6 x 42	Bendix
1.6 100 16V	09/96→05/02	76 / 103										
			Ate		**82030900**			Lkh		**91053100**	ø 228.6 x 42	Lockheed
			Ate		**82062900**			Ben		**97006700**		Bendix
				PRO	**92068503**	ø 257 x 20 x 40.5		Lkh		**97015200**		
								Lkh		**83053100**	bore ø 22.2 ø 228.6 x 42	Lockheed
								Ben		**84037001**	bore ø 20.6 ø 228.6 x 42	Bendix
										94014000	ø 228,3 x 48	
		196200	Ate		**2192701**	[+] 21927 17.9		Ben		**91037000**	ø 228.6 x 42	Bendix
1.9 JTD 105	04/99→05/02	77 / 105										
1.9 TD 100	09/96→05/02	74 / 100	Ate		**82030900**			Lkh		**91053100**	ø 228.6 x 42	Lockheed
			Ate		**82062900**			Ben		**97006700**		Bendix
				PRO	**92068503**	ø 257 x 20 x 40.5		Lkh		**97015200**		
								Lkh		**84053102**	bore ø 20.6 ø 228.6 x 42	Lockheed
										94014000	ø 228,3 x 48	
		196300	Ate		**2328902**	[+] 23289 19		Luc		**2317703**	[–] 23177 14.4	
2.0 150 20V	09/96→04/99	108 / 147										
2.4 TD 125	09/96→04/99	91 / 125	Ate		**82032000**			Luc		**82037300**		
			Ate		**82062900**			Luc		**82062800**		
				PRO	**92053503**	ø 284 x 22 x 43.5			PRO	**92061103**	ø 240 x 11 x 40	
		196400	Ate		**2322201**	[+] 23222 19		Luc		**2317703**	[–] 23177 14.4	
2.0 150 20V	01/01→05/02	110 / 150										
			Ate		**82032000**			Luc		**82037300**		
			Ate		**82062900**			Luc		**82062800**		
				PRO	**92053503**	ø 284 x 22 x 43.5			PRO	**92061103**	ø 240 x 11 x 40	
		196500	Ate		**2322201**	[+] 23222 19	04/00→	Luc		**2317703**	[–] 23177 14.4	
2.0 155 20V	04/99→02/03	113 / 154										
2.4 JTD 130	04/99→05/02	96 / 130	Ate		**2328902**	[+] 23289 19	→03/00	Luc		**82037300**		
			Ate		**82032000**			Luc		**82062800**		
			Ate		**82062900**				PRO	**92061103**	ø 240 x 11 x 40	
				PRO	**92053503**	ø 284 x 22 x 43.5						
MILLE 10/88→												
		196600	Ben		**2095005**	[–] 20950 18	⊕ Classic line	Lkh		**91048400**	ø 185 x 31	
1.0	10/94→06/06	35 / 48										
1.0	01/10→	49 / 67	Ben		**2095006**	[+] 20950 18		Lkh		**97010800**		
1.4	10/88→03/01	49 / 67						Lkh		**84048400**	bore ø 19 ø 185 x 31	
										94006400	ø 185,3 x 35.7	
MULTIPLA (186) 04/99→06/10												
		196700	Ate		**2328902**	[+] 23289 19	Teves	Bos		**2371401**	[–] 23714 15.5	⊕ rear disc brake
1.6	09/00→06/10	76 / 103										
1.6	03/01→08/05	74 / 101										
1.6	05/04→08/05	68 / 92										

→

		kW / hp											
MULTIPLA (186) 04/99→06/10													
1.6 100 16V (186AXA1A)	04/99→06/10	76 / 103	Bos		2370802	[+] 23708 19	Bosch	Bos		2371481	[–] 23714 15.5	⊕ rear disc brake
1.6 16V (186AGB1A)	04/02→06/10	70 / 95										
1.6 16V Bipower (186AMB1A)	04/99→06/10	76 / 103	Bos		2370881	[+] 23708 19	Bosch	Bos		82054300		
1.6 16V Bipower (186AXC1A)	10/01→06/10	76 / 103	Bos		82054200		Bosch	Lkh		91053100	ø 228.6 x 42	⊕ rear drum brake
1.6 16V Blupower (186AMA1A)	04/99→06/10	70 / 95	Ate		82032000		Teves	Lkh		97014700		
1.9 JTD (186AXE1A)	04/02→06/10	88 / 120										
1.9 JTD 105 (186AXB1A)	04/99→06/10	77 / 105	Ate		82062900		Teves	Lkh		84053102	bore ø 20.6 ø 228.6 x 42	
1.9 JTD 110	03/01→07/02	81 / 110										
1.9 JTD 115	07/02→06/10	85 / 115			92055203	ø 284 x 22 x 39.4				92034203	ø 251 x 10 x 50.5	⊕ rear disc brake
										94014000	ø 228,3 x 48	⊕ rear drum brake
PALIO (178BX) 04/96→												
		196800	Ate		2321901	[–] 23219 18	→03/98	Lkh		91053100	ø 228.6 x 42	
1.0	04/96→	45 / 61										
1.0	04/96→	56 / 77	Ate		2355202	[–] 23552 18	10/00→			91061500	ø 185 x 29	
1.1	07/97→10/03	40 / 54										
1.2	07/97→08/02	44 / 60										
1.4	04/96→	51 / 69	Ate		2377501	[–] 23775 18	04/98→ →09/00	Lkh		97014700		
1.4 CAT	04/96→	51 / 69										
			Ate		2321801	[+] 23218 18	→03/98			94014000	ø 228,3 x 48	
			Ate		2377601	[+] 23776 18	04/98→ →09/00			94020000	ø 185,0 x 36.5	
			Ate		82027100							
			Ate		82062900							
					92090300	ø 240 x 20 x 46.5						
		196900	Ate		2355202	[–] 23552 18	10/00→	Lkh		91053100	ø 228.6 x 42	
1.2	06/98→	54 / 73										
1.2	06/99→10/00	50 / 68	Ate		2377501	[–] 23775 18	→09/00			91061500	ø 185 x 29	
			Ate		2377601	[+] 23776 18	→09/00	Lkh		97014700		
			Ate		82027100			Lkh		83053101	bore ø 20.6 ø 228.6 x 42	
			Ate		82062900					94014000	ø 228,3 x 48	
					92090300	ø 240 x 20 x 46.5				94020000	ø 185,0 x 36.5	
		197000	Ate		2355202	[–] 23552 18		Lkh		91053100	ø 228.6 x 42	
1.2	09/01→	59 / 80										
			Ate		82027100					91061500	ø 185 x 29	
			Ate		82062900			Lkh		97014700		
					92090300	ø 240 x 20 x 46.5				94014000	ø 228,3 x 48	
										94020000	ø 185,0 x 36.5	
		197100								91061500	ø 185 x 29	
1.3	06/00→	53 / 72										
1.4	04/05→12/08	59 / 82										
1.4	10/05→	57 / 78								94020000	ø 185,0 x 36.5	
1.5	06/04→	62 / 84										
		197200	Ate		2321901	[–] 23219 18	→03/98	Lkh		91053100	ø 228.6 x 42	
1.5	04/96→	57 / 77										
			Ate		2377501	[–] 23775 18	04/98→			91061500	ø 185 x 29	
			Ate		2321801	[+] 23218 18	→03/98	Lkh		97014700		
			Ate		2377601	[+] 23776 18	04/98→			94014000	ø 228,3 x 48	
			Ate		82027100					94020000	ø 185,0 x 36.5	
			Ate		82062900							
					92090300	ø 240 x 20 x 46.5						
		197300						Lkh		91053100	ø 228.6 x 42	
1.6	07/97→10/00	68 / 92										
1.6	06/99→	70 / 95								94014000	ø 228,3 x 48	
1.7 TD	02/97→10/03	52 / 71										
1.7 TD	09/01→	53 / 72										
		197400	Ate		2355202	[–] 23552 18	10/00→	Lkh		91053100	ø 228.6 x 42	
1.6 16V	04/96→	74 / 100										
			Ate		2322702	[+] 23227 18	→09/00			91061500	ø 185 x 29	

		kW / hp										
PALIO (178BX) 04/96→												
		197400	Ate		**82027100**			Lkh		**97014700**		
1.6 16V	04/96→	74 / 100	Ate		**82062900**					**94014000**	ø 228,3 x 48	
				PRO	**92068503**	ø 257 x 20 x 40.5				**94020000**	ø 185,0 x 36.5	
PALIO Sedán (178_) 04/96→10/07 → SIENA (178_), Page 369												
PALIO Stufenheck (178_) 04/96→10/07 → SIENA (178_), Page 369												
PALIO Weekend (178DX) 04/96→10/02												
		197500	Ate		**2377501**	[–] 23775 18				**91061500**	ø 185 x 29	
1.2	06/99→10/02	50 / 68	Ate		**82027100**					**94020000**	ø 185,0 x 36.5	
			Ate		**82062900**							
					92090300	ø 240 x 20 x 46.5						
		197600	Ate		**2321901**	[–] 23219 18	→03/98	Lkh		**91053100**	ø 228.6 x 42	Lockheed
1.2 (178DX.G1A)	04/96→02/01	54 / 73										
1.7 TD (178DX.H1A)	04/96→03/01	51 / 70	Ate		**2355202**	[–] 23552 18	10/00→	Ben		**91064700**	ø 228.6 x 42	Bendix
			Ate		**2377501**	[–] 23775 18	04/98→ →09/00	Lkh		**97014700**		Lockheed
			Ate		**2321801**	[+] 23218 18	→03/98	Lkh		**84053102**	bore ø 20.6 ø 228.6 x 42	Lockheed
			Ate		**2377601**	[+] 23776 18	04/98→ →09/00			**94014000**	ø 228,3 x 48	Lockheed
			Ate		**82027100**							
			Ate		**82062900**							
					92090300	ø 240 x 20 x 46.5						
				PRO	**92068503**	ø 257 x 20 x 40.5						
		197700	Ate		**2355202**	[–] 23552 18		Lkh		**91053100**	ø 228.6 x 42	Lockheed
1.2 (178DYA1A)	02/01→	44 / 60										
1.9 D (178DYD1A07)	03/01→	46 / 63	Ate		**82027100**			Ben		**91064700**	ø 228.6 x 42	Bendix
			Ate		**82062900**			Lkh		**97014700**		Lockheed
					92090300	ø 240 x 20 x 46.5				**94014000**	ø 228,3 x 48	Lockheed
				PRO	**92068503**	ø 257 x 20 x 40.5						
		197800						Lkh		**91053100**	ø 228.6 x 42	
1.4	07/97→08/01	51 / 69								**94014000**	ø 228,3 x 48	
		197900	Ate		**2355202**	[–] 23552 18		Lkh		**91053100**	ø 228.6 x 42	
1.5	02/02→	62 / 84										
1.6	07/97→10/03	68 / 92	Ate		**82027100**			Lkh		**97014700**		
1.7 TD	07/97→	53 / 72										
1.9 JTD	09/01→	59 / 80	Ate		**82062900**					**94014000**	ø 228,3 x 48	
				PRO	**92068503**	ø 257 x 20 x 40.5						
		198000						Lkh		**91053100**	ø 228.6 x 42	
1.6	07/97→	70 / 95						Lkh		**97014700**		
										94014000	ø 228,3 x 48	
		198100	Ate		**2355202**	[–] 23552 18	10/00→	Lkh		**91053100**	ø 228.6 x 42	Lockheed
1.6 16V (178DX.D1A)	04/96→02/01	74 / 100	Ate		**2322702**	[+] 23227 18	→09/00	Ben		**91064700**	ø 228.6 x 42	Bendix
			Ate		**82027100**			Lkh		**97014700**		Lockheed
			Ate		**82062900**			Lkh		**84053102**	bore ø 20.6 ø 228.6 x 42	Lockheed
				PRO	**92068503**	ø 257 x 20 x 40.5				**94014000**	ø 228,3 x 48	Lockheed
		198200	Ate		**2355202**	[–] 23552 18		Lkh		**91053100**	ø 228.6 x 42	Lockheed
1.6 16V (178DYC1A06)	02/01→	76 / 103	Ate		**82027100**			Ben		**91064700**	ø 228.6 x 42	Bendix
			Ate		**82062900**			Lkh		**97014700**		Lockheed

→

		kW / hp											
PALIO Weekend (178DX) 04/96→10/02													
198200													
1.6 16V (178DYC1A06)	02/01→	76 / 103		PRO	92068503	ø 257 x 20 x 40.5				94014000	ø 228,3 x 48	Lockheed	
PANDA (141A_) 01/82→07/04													
198300			Ben		2095005	[–] 20950 18		Ben		91005900	ø 185 x 31	Bendix →01/93	
1100	05/91→12/99	37 / 50											
1100 Trekking 4x4	10/91→07/04	37 / 50	Luc		2083302	[+] 20833 17.1	⊕ autom.	Lkh		91048400	ø 185 x 31	Lockheed 01/93→	
			Ben		2095006	[+] 20950 18		Fia		97002500		→01/93	
			Ben		82027000			Lkh		97010800		01/93→	
					92019300	ø 227 x 10.8 x 45.8		Ben		83005900	bore ø 19 ø 185 x 31	Bendix →01/93	
					92034500	ø 240 x 12 x 46.5	⊕ autom.	Lkh		84048400	bore ø 19 ø 185 x 31	Lockheed 01/93→	
										94006400	ø 185,3 x 35.7		
198400			Ben		2095005	[–] 20950 18		Lkh		91048400	ø 185 x 31	Lockheed	
1100	02/95→09/03	40 / 54											
1100 4x4	02/95→07/04	40 / 54	Luc		2083302	[+] 20833 17.1	⊕ autom.	Lkh		97010800			
750 (141AM) CAT	01/95→10/03	25 / 34	Ben		2095006	[+] 20950 18		Lkh		84048400	bore ø 19 ø 185 x 31	Lockheed	
			Ben		82027000					94006400	ø 185,3 x 35.7		
					92019300	ø 227 x 10.8 x 45.8							
					92034500	ø 240 x 12 x 46.5	⊕ autom.						
198500			Ben		2007304	[–] 20073 17.3	→08/82	Ben		91005900	ø 185 x 31	Bendix →01/93	
650	01/82→07/04	22 / 30	Ben		2095005	[–] 20950 18	09/82→	Lkh		91048400	ø 185 x 31	Lockheed 01/93→	
			Luc		2083302	[+] 20833 17.1	⊕ autom.	Fia		97002500		→01/93	
			Ben		2095006	[+] 20950 18	09/82→	Lkh		97010800		01/93→	
			Ben		82027000			Ben		83005900	bore ø 19 ø 185 x 31	Bendix →01/93	
					92019300	ø 227 x 10.8 x 45.8				94006400	ø 185,3 x 35.7		
					92034500	ø 240 x 12 x 46.5	⊕ autom.						
PANDA (169) 09/03→													
198600			Ben		2143602	[–] 21436 17		Lkh		91061000	ø 180 x 32	Lockheed ⊖ ABS	
1.1	09/03→	40 / 54											
1.2	09/03→	44 / 60	Ben		82033600			Bos		91064600	ø 180 x 32	Lockheed ⊕ ABS	
1.2	03/10→	51 / 69	Ben		82063600			Ben		97005800		Lockheed ⊖ ABS	
1.2 LPG	04/09→	44 / 60		PRO	92061103	ø 240 x 11 x 40		Lkh		97009500		Lockheed ⊕ ABS	
1.2 LPG	11/10→	51 / 69						Lkh		84061000	bore ø 20.6 ø 180 x 32	Lockheed ⊖ ABS	
1.4 Natural Power	01/10→	51 / 69								84064600	bore ø 20.6 ø 180 x 32	Lockheed ⊕ ABS	
										94014800	ø 180,0 x 40.1		
198700			Bos		2407201	[–] 24072 17.7		Luc		2360102	[–] 23601 13.7		
1.2 4x4	10/04→	44 / 60	Bos		82054200			Luc		82060100			
			Bos		82063800				PRO	92061103	ø 240 x 11 x 40		
			Bos		82510100								
				PRO	92118003	ø 240 x 20 x 40.5							
198800			Bos		2407201	[–] 24072 17.7		Luc		2360102	[–] 23601 13.7	⊕ rear disc brake	
1.2 4x4	11/09→	51 / 69	Bos		82054200			Luc		82060100		⊕ rear disc brake	
			Bos		82063800					91065300	ø 203.2 x 38	⊕ rear drum brake	
			Bos		82510100				PRO	92061103	ø 240 x 11 x 40	⊕ rear disc brake	
				PRO	92118003	ø 240 x 20 x 40.5				94019900	ø 203,2 x 48.5	⊕ rear drum brake	

F - H

		kW / hp											
PANDA (169) 09/03→													
		198900	Bos		2407201	[–] 24072 17.7				91065300	ø 203.2 x 38	
1.2 Bi-Power / Natural Power	01/07→	44 / 60	Ben		82033600			Ben		97005800		Lockheed ⊖ ABS
			Ben		82063600			Lkh		97009500		Lockheed ⊕ ABS
				PRO	92118003	ø 240 x 20 x 40.5				94019900	ø 203,2 x 48.5	
		199000	Bos		2407201	[–] 24072 17.7		Lkh		91061000	ø 180 x 32	Lockheed ⊖ ABS
1.3 D Multijet	09/03→	51 / 70										
1.3 D Multijet	06/06→	55 / 75	Bos		82054200			Bos		91064600	ø 180 x 32	Lockheed ⊕ ABS
			Bos		82063800			Ben		97005800		Lockheed ⊖ ABS
			Bos		82510100			Lkh		97009500		Lockheed ⊕ ABS
				PRO	92118003	ø 240 x 20 x 40.5		Lkh		84061000	bore ø 20.6 ø 180 x 32	Lockheed ⊖ ABS
										84064600	bore ø 20.6 ø 180 x 32	Lockheed ⊕ ABS
										94014800	ø 180,0 x 40.1	
		199100	Bos		2370502	[+] 23705 17.8		Luc		2360102	[–] 23601 13.7	
1.3 D Multijet 4x4	10/04→	51 / 70										
1.3 D Multijet 4x4	09/10→	55 / 75										
1.4	10/06→	74 / 100	Bos	epad	2370581	[+] 23705 17.8		Luc		82060100		
			Bos		82054200				PRO	92061103	ø 240 x 11 x 40	
			Bos		82063800							
			Bos		82510100							
				PRO	92069603	ø 257 x 22 x 40.5						
		199200	Bos		2370502	[+] 23705 17.8		Luc		2360102	[–] 23601 13.7	⊕ rear disc brake
1.4 Bi-Power / Natural Power	09/10→	57 / 78										
			Bos	epad	2370581	[+] 23705 17.8		Luc		82060100		⊕ rear disc brake
			Bos		82054200					91065300	ø 203.2 x 38	⊕ rear drum brake
			Bos		82063800				PRO	92061103	ø 240 x 11 x 40	⊕ rear disc brake
			Bos		82510100					94019900	ø 203,2 x 48.5	⊕ rear drum brake
				PRO	92069603	ø 257 x 22 x 40.5						
PANDA (312) 02/12→													
		199300	Ate		2532301	[+] 25323 17.3				91065300	ø 203.2 x 38	
0.9	02/12→	48 / 65										
0.9	12/13→	44 / 60										
0.9	12/13→	59 / 80	Ate		82029200					97031500		
				PRO	92236703	ø 257 x 12 x 40.5	⊕ light alloy rim					
				PRO	92252803	ø 284 x 22 x 43.3	⊖ light alloy rim					
		199400	Ate		2532301	[+] 25323 17.3				91065300	ø 203.2 x 38	
0.9	02/12→	57 / 78										
0.9 Natural Power	07/12→	63 / 86	Ate		82029200					97031500		
		199500	Ate		2532301	[+] 25323 17.3				91065300	ø 203.2 x 38	
0.9	02/12→	63 / 86										
1.2	02/12→	51 / 69										
1.3 D Multijet	02/12→	55 / 75										
		199600	Ate		2532301	[+] 25323 17.3		TRW		2541001	[+] 25410 14.4	
0.9 4x4	09/12→	63 / 86										
1.3 D Multijet 4x4	06/12→	55 / 75	Ate		82029200							
		199700	Ate		2532301	[+] 25323 17.3				91065300	ø 203.2 x 38	
1.2 LPG	06/12→	51 / 69										
			Ate		82029200					97031500		
				PRO	92252803	ø 284 x 22 x 43.3						
PANDA Van (141_) 08/92→02/04													
		199800	Ben		2095005	[–] 20950 18		Lkh		91048400	ø 185 x 31	Lockheed
1.1	09/00→02/04	40 / 54	Luc		2083302	[+] 20833 17.1	⊕ autom.	Lkh		97010800		
			Ben		2095006	[+] 20950 18		Lkh		84048400	bore ø 19 ø 185 x 31	Lockheed

→

30 kW / hp

PANDA Van (141_) 08/92→02/04

1.1	09/00→02/04	199800 40 / 54	Ben		82027000				94006400	ø 185,3 x 35.7	
					92019300	ø 227 x 10.8 x 45.8					
					92034500	ø 240 x 12 x 46.5	⊕ autom.				
1000 i.e	08/92→02/04	199900 33 / 45	Ben		2095005	[–] 20950 18		Ben	91005900	ø 185 x 31	Bendix →01/93
			Luc		2083302	[+] 20833 17.1	⊕ autom.	Lkh	91048400	ø 185 x 31	Lockheed 01/93→
			Ben		2095006	[+] 20950 18		Fia	97002500		→01/93
			Ben		82027000			Lkh	97010800		01/93→
					92019300	ø 227 x 10.8 x 45.8		Ben	83005900	bore ø 19 ø 185 x 31	Bendix →01/93
					92034500	ø 240 x 12 x 46.5	⊕ autom.		94006400	ø 185,3 x 35.7	

PANDA Van (169) 03/04→

1.1 1.2 1.2 1.2 LPG	09/04→ 09/04→ 09/10→ 09/10→	200000 40 / 54 44 / 60 51 / 69 51 / 69	Ben		2143602	[–] 21436 17		Lkh	91061000	ø 180 x 32	Lockheed ⊖ ABS
			Ben		82033600			Bos	91064600	ø 180 x 32	Lockheed ⊕ ABS
			Ben		82063600			Ben	97005800		Lockheed ⊖ ABS
				PRO	92061103	ø 240 x 11 x 40		Lkh	97009500		Lockheed ⊕ ABS
								Lkh	84061000	bore ø 20.6 ø 180 x 32	Lockheed ⊖ ABS
									84064600	bore ø 20.6 ø 180 x 32	Lockheed ⊕ ABS
									94014800	ø 180,0 x 40.1	
1.2 4x4 1.2 4x4	09/04→ 09/10→	200100 44 / 60 51 / 69	Bos		2407201	[–] 24072 17.7		Luc	2360102	[–] 23601 13.7	
			Bos		82054200			Luc	82060100		
			Bos		82063800				92061103	ø 240 x 11 x 40	
			Bos		82510100						
				PRO	92118003	ø 240 x 20 x 40.5					
1.3 JTD 1.3 JTD	03/04→ 01/06→	200200 51 / 70 55 / 75	Bos		2407201	[–] 24072 17.7		Lkh	91061000	ø 180 x 32	Lockheed ⊖ ABS
			Bos		82054200			Bos	91064600	ø 180 x 32	Lockheed ⊕ ABS
			Bos		82063800			Ben	97005800		Lockheed ⊖ ABS
			Bos		82510100			Lkh	97009500		Lockheed ⊕ ABS
				PRO	92118003	ø 240 x 20 x 40.5		Lkh	84061000	bore ø 20.6 ø 180 x 32	Lockheed ⊖ ABS
									84064600	bore ø 20.6 ø 180 x 32	Lockheed ⊕ ABS
									94014800	ø 180,0 x 40.1	
1.3 Multijet 4x4	01/06→	200300 55 / 75	Bos		2370502	[+] 23705 17.8		Luc	2360102	[–] 23601 13.7	
			Bos	epad	2370581	[+] 23705 17.8		Luc	82060100		
			Bos		82054200				92061103	ø 240 x 11 x 40	
			Bos		82063800						
			Bos		82510100						
				PRO	92069603	ø 257 x 22 x 40.5					
1.4 Natural Power	10/09→	200400 57 / 78	Bos		2370502	[+] 23705 17.8		Luc	2360102	[–] 23601 13.7	⊕ rear disc brake
			Bos	epad	2370581	[+] 23705 17.8		Luc	82060100		⊕ rear disc brake
			Bos		82054200				91065300	ø 203.2 x 38	⊕ rear drum brake
			Bos		82063800				92061103	ø 240 x 11 x 40	⊕ rear disc brake
			Bos		82510100				94019900	ø 203,2 x 48.5	⊕ rear drum brake

F - H

		kW / hp										
PANDA Van (169) 03/04→												
		200400										
1.4 Natural Power	10/09→	57 / 78		PRO	**92069603**	ø 257 x 22 x 40.5						
PETRA (178_) 04/96→10/07 → SIENA (178_), Page 369												
PRATICO Pritsche/Fahrgestell (263) 02/10→ → DOBLO Platform/Chassis (263), Page 339												
PUNTO / GRANDE PUNTO (199) 10/05→12/11												
		200500	Bos		**2370601**	[+] 23706 17.8				**91065300**	ø 203.2 x 38	Lockheed
			Bos		**82054200**					**97031500**		
				PRO	**92164603**	ø 257 x 12 x 40.5				**83065300**	bore ø 20.6 ø 203.2 x 38	
				PRO	**92145703**	ø 257 x 22 x 40.6		Lkh		**84065301**	bore ø 20.6 ø 203.2 x 38	
								Lkh		**84065300**	bore ø 19 ø 203.2 x 38	
										94027600	ø 203,2 x 48	
		200600	Bos		**2397901**	[+] 23979 17.8				**91065300**	ø 203.2 x 38	
1.2	10/05→12/11	44 / 60		PRO	**92164603**	ø 257 x 12 x 40.5				**97031500**		
										94027600	ø 203,2 x 48	
		200700	Bos		**2397901**	[+] 23979 17.8				**91065300**	ø 203.2 x 38	Lockheed
1.2	09/06→	50 / 68										
1.2	09/10→	51 / 69										
1.2 LPG	07/08→	51 / 69	Bos		**82054200**					**97031500**		
				PRO	**92164603**	ø 257 x 12 x 40.5				**83065300**	bore ø 20.6 ø 203.2 x 38	
				PRO	**92145703**	ø 257 x 22 x 40.6		Lkh		**84065301**	bore ø 20.6 ø 203.2 x 38	
								Lkh		**84065300**	bore ø 19 ø 203.2 x 38	
										94027600	ø 203,2 x 48	
		200800	Bos		**2370601**	[+] 23706 17.8				**91065400**	ø 228.6 x 42	
1.3 D Multijet	10/05→	55 / 75										
1.4	10/05→	57 / 77										
1.4 Flex	08/07→06/10	63 / 86	Bos		**82054200**			Lkh		**97015200**		
1.4 LPG	12/08→	57 / 78		PRO	**92145703**	ø 257 x 22 x 40.6				**83065401**	bore ø 20.6 ø 228.6 x 42	
										84065400	bore ø 20.6 ø 228.6 x 42	
										94027200	ø 228,3 x 47.5	
		200900	Bos		**2370802**	[+] 23708 19		Bos		**2434901**	[–] 24349 17.5	⊕ light alloy rim
1.3 D Multijet	10/05→	66 / 90										
1.3 D Multijet	01/12→	68 / 93	Bos	epad	**2370881**	[+] 23708 19		Bos		**82054300**		
			Bos		**82054200**					**91065400**	ø 228.6 x 42	⊕ steel rim
				PRO	**92145803**	ø 284 x 22 x 43.2		Lkh		**97015200**		
										83065401	bore ø 20.6 ø 228.6 x 42	
										84065400	bore ø 20.6 ø 228.6 x 42	
									PRO	**92145903**	ø 264 x 10 x 40.6	
										94027200	ø 228,3 x 47.5	
		201000	Bos		**2370802**	[+] 23708 19		Bos		**2434901**	[–] 24349 17.5	⊕ light alloy rim
1.3 D Multijet	07/08→	51 / 69										
1.3 D Multijet	06/09→	56 / 76	Bos	epad	**2370881**	[+] 23708 19				**91065400**	ø 228.6 x 42	
			Bos		**2397901**	[+] 23979 17.8		Lkh		**97015200**		
			Bos		**82054200**					**83065401**	bore ø 20.6 ø 228.6 x 42	
				PRO	**92145703**	ø 257 x 22 x 40.6				**84065400**	bore ø 20.6 ø 228.6 x 42	
				PRO	**92145803**	ø 284 x 22 x 43.2			PRO	**92145903**	ø 264 x 10 x 40.6	
										94027200	ø 228,3 x 47.5	
		201100	Bos		**2370901**	[+] 23709 19		Bos		**2434901**	[–] 24349 17.5	⊕ rear disc brake
1.3 D Multijet	04/10→	62 / 84	Bos		**82054200**			Bos		**82054300**		⊕ light alloy rim ⊕ rear disc brake

		kW / hp											
PUNTO / GRANDE PUNTO (199) 10/05→12/11													
		201100											
1.3 D Multijet	04/10→	62 / 84		PRO	92145803	ø 284 x 22 x 43.2				91065400	ø 228.6 x 42	⊕ rear drum brake
									Lkh	97015200		⊕ rear drum brake
				PRO	92145903	ø 264 x 10 x 40.6	⊕ rear disc brake					
										94027200	ø 228,3 x 47.5	⊕ rear drum brake
		201200	Bos		2397901	[+] 23979 17.8				91065400	ø 228.6 x 42	
1.4	06/06→	55 / 75							Lkh	97015200		
1.4 Natural Power	07/08→	57 / 78	Bos		82054200							
				PRO	92145703	ø 257 x 22 x 40.6				83065401	bore ø 20.6 ø 228.6 x 42	
										84065400	bore ø 20.6 ø 228.6 x 42	
										94027200	ø 228,3 x 47.5	
		201300	Bos		2397901	[+] 23979 17.8			Bos	2434901	[–] 24349 17.5	⊕ sports susp.
1.4 16V	10/05→	70 / 95										
1.4 16V	09/06→	66 / 90	Bos		82054200				Bos	82054300		⊕ sports susp.
				PRO	92145703	ø 257 x 22 x 40.6				91065400	ø 228.6 x 42	⊖ sports susp.
									Lkh	97015200		
										83065401	bore ø 20.6 ø 228.6 x 42	
										84065400	bore ø 20.6 ø 228.6 x 42	
				PRO	92145903	ø 264 x 10 x 40.6	⊕ sports susp.					
										94027200	ø 228,3 x 47.5	⊖ sports susp.
		201400	Bre		2416202	[+] 24162 15.3			Bos	2434901	[–] 24349 17.5	
1.4 16V	09/07→07/12	112 / 152										
1.4 Abarth	12/07→	114 / 155	Bre		82518000				Bos	82054300		
1.4 Abarth	12/07→	132 / 180										
				PRO	92145903	ø 264 x 10 x 40.6						
		201500	Bos		2370802	[+] 23708 19			Bos	2434901	[–] 24349 17.5	
1.4 T-Jet	09/07→	88 / 120										
1.6 D Multijet	07/08→	88 / 120	Bos	epad	2370881	[+] 23708 19			Bos	82054300		
1.6 Flex	09/08→	85 / 117										
1.8 16V	07/10→07/12	96 / 131	Bos		82054200							
1.8 Flex	08/07→06/10	85 / 116										
1.9 D Multijet	10/05→	88 / 120										
1.9 D Multijet	10/05→	96 / 130										
1.9 D Multijet	06/06→	85 / 116		PRO	92145803	ø 284 x 22 x 43.2				92145903	ø 264 x 10 x 40.6	
PUNTO (176) 09/93→09/99													
		201600	Ate		2318101	[–] 23181 17.9	05/97→		Luc	2317703	[–] 23177 14.4	⊕ rear disc brake
1.2 16V	04/97→09/99	63 / 86										
1.7 TD	01/94→09/99	51 / 69	Luc		2083302	[+] 20833 17.1	→04/97		Luc	82037300		
1.7 TD	01/94→09/99	52 / 71										
			Ate		82032000		05/97→		Luc	82062800		
			Luc		82062800		→04/97		Ben	91049100	ø 180 x 32	Bendix ⊕ rear drum brake
			Ate		82062900		05/97→		Lkh	91049200	ø 180 x 32	Lockheed ⊕ rear drum brake
				PRO	92041503	ø 257 x 12 x 40.5			Ben	97005800		Bendix ⊕ rear drum brake
									Lkh	97009500		Lockheed ⊕ rear drum brake
									Ben	84049103	bore ø 20.6 ø 180 x 32	Bendix ⊕ rear drum brake
									Lkh	84049200	bore ø 20.6 ø 180 x 32	Lockheed ⊕ rear drum brake
										92061103	ø 240 x 11 x 40	⊕ rear disc brake
										94014800	ø 180,0 x 40.1	⊕ rear drum brake
		201700	Ate		2192703	[–] 21927 17.9	05/97→		Luc	2317703	[–] 23177 14.4	
1.4 GT Turbo	09/96→09/99	96 / 131	Luc		2083302	[+] 20833 17.1	→04/97		Luc	82037300		
			Ate		82030900		05/97→		Luc	82062800		
			Luc		82062800		→04/97			92061103	ø 240 x 11 x 40	

		kW / hp										
PUNTO (176) 09/93→09/99												
201700			Ate	82062900		05/97→						
1.4 GT Turbo	09/96→09/99	96 / 131	PRO	92068503	ø 257 x 20 x 40.5							
201800			Ate	2318101	[–] 23181 17.9	05/97→	Luc	2317703	[–] 23177 14.4	⊕ rear disc brake		
1.7 TD	09/96→09/99	46 / 63	Luc	2083302	[+] 20833 17.1	→04/97	Luc	82037300				
			Ate	82032000		05/97→	Luc	82062800				
			Luc	82062800		→04/97	Ben	91049100	ø 180 x 32	Bendix ⊕ rear drum brake		
			Ate	82062900		05/97→	Lkh	91049200	ø 180 x 32	Lockheed ⊕ rear drum brake		
			PRO	92041503	ø 257 x 12 x 40.5		Ben	97005800		Bendix ⊕ rear drum brake		
							Lkh	97009500		Lockheed ⊕ rear drum brake		
							Lkh	84049200	bore ø 20.6 ø 180 x 32	Lockheed ⊕ rear drum brake		
							PRO	92061103	ø 240 x 11 x 40	⊕ rear disc brake		
								94014800	ø 180,0 x 40.1	⊕ rear drum brake		
201900			Ben	2143602	[–] 21436 17		Ben	91049100	ø 180 x 32	Bendix		
55 1.1	09/93→09/99	40 / 54	Luc	2083302	[+] 20833 17.1	⊕ ABS	Lkh	91049200	ø 180 x 32	Lockheed		
60 1.2	01/94→09/99	43 / 58	Ben	2143603	[+] 21436 17		Ben	97005800		Bendix		
60 1.2	03/94→09/99	44 / 60	Ben	82033600			Lkh	97009500		Lockheed		
75 1.2	10/93→09/99	54 / 73	Luc	82062800		⊕ ABS	Ben	84049103	bore ø 20.6 ø 180 x 32	Bendix		
			Ben	82063600			Lkh	84049200	bore ø 20.6 ø 180 x 32	Lockheed		
			PRO	92041503	ø 257 x 12 x 40.5	⊕ ABS		94014800	ø 180,0 x 40.1			
			PRO	92061103	ø 240 x 11 x 40	⊖ ABS						
PUNTO (188) 09/99→												
202000			Ate	2318101	[–] 23181 17.9		Lkh	91054300	ø 180 x 32	Lockheed		
1.2 16V 80 (188.233, .235, .	09/99→	59 / 80	Ate	82032000			Lkh	91054400	ø 180 x 32	Lockheed ⊕ ABS		
253, .255, .333, .353, .			Ate	82062900			Lkh	97009500		⊖ ABS		
639...)			PRO	92041503	ø 257 x 12 x 40.5		Lkh	97014900		⊕ ABS		
							Lkh	84054300	bore ø 20.6 ø 180 x 32	Lockheed		
							Lkh	84054400	bore ø 20.6 ø 180 x 32	Lockheed ⊕ ABS		
								94014800	ø 180,0 x 40.1			
202100			Ben	2143602	[–] 21436 17		Lkh	91054300	ø 180 x 32	Lockheed ⊖ ABS		
1.2 60 (188.030, .050, .	09/99→	44 / 60	Ben	2143603	[+] 21436 17		Lkh	91054400	ø 180 x 32	Lockheed ⊕ ABS		
130, .150, .230, .250)			Ben	82033600			Lkh	97009500		⊖ ABS		
			Ben	82063600			Lkh	97014900		⊕ ABS		
			PRO	92061103	ø 240 x 11 x 40		Lkh	84054300	bore ø 20.6 ø 180 x 32	Lockheed		
							Lkh	84054400	bore ø 20.6 ø 180 x 32	Lockheed ⊕ ABS		
								94014800	ø 180,0 x 40.1			
202200			Ben	2143602	[–] 21436 17		Lkh	91054300	ø 180 x 32	Lockheed		
1.2 Bifuel	08/07→	44 / 60	Ben	2143603	[+] 21436 17		Lkh	91054400	ø 180 x 32	Lockheed ⊕ ABS		
1.2 Natural Power	09/03→	44 / 60	Ben	82033600			Lkh	97009500		⊖ ABS		
			Ben	82063600			Lkh	97014900		⊕ ABS		
			PRO	92061103	ø 240 x 11 x 40			94014800	ø 180,0 x 40.1			

→

PUNTO (188) 09/99→

1.3 JTD 16V	06/03→	202300 51 / 70	Ate		2192703	[–] 21927 17.9		Lkh		91054400	ø 180 x 32	
			Ate		82030900			Lkh		97014900		
			Ate		82062900					94014800	ø 180,0 x 40.1	
				PRO	92068503	ø 257 x 20 x 40.5						
1.4	09/03→	202400 70 / 95	Ate		2192703	[–] 21927 17.9				91061100	ø 203.2 x 38	Lockheed →06/05 ⊕ ABS
			Ate		82030900					91065300	ø 203.2 x 38	Lockheed 07/05→ →11/05 ⊕ ABS
			Ate		82062900			Lkh		97015200		
				PRO	92068503	ø 257 x 20 x 40.5		APL - brake		84061100	bore ø 20.6 ø 203.2 x 38	Lochheed →06/05 verif. GVM 1 kg
										94019900	ø 203,2 x 48.5	
1.4	11/05→	202500 71 / 97	Bos		2397901	[+] 23979 17.8				91065400	ø 228.6 x 42	
				PRO	92145703	ø 257 x 22 x 40.6		Lkh		97030900		
										94027200	ø 228,3 x 47.5	
1.4 1.4 Flex	08/10→ 08/07→06/10	202600 64 / 87 63 / 85	Ate		2192703	[–] 21927 17.9				91061100	ø 203.2 x 38	Lockheed ⊕ ABS
			Ate		82030900					94019900	ø 203,2 x 48.5	
			Ate		82062900							
				PRO	92068503	ø 257 x 20 x 40.5						
1.8 130 HGT (188.738, .718)	09/99→	202700 96 / 130	Ate		2355202	[–] 23552 18		Luc		2360102	[–] 23601 13.7	
			Ate		82027100			Luc		82060100		
			Ate		82062900				PRO	92061103	ø 240 x 11 x 40	
				PRO	92069603	ø 257 x 22 x 40.5						
1.8 Flex	01/07→	202800 85 / 116	Ate		2322201	[+] 23222 19		Luc		2360102	[–] 23601 13.7	
			Ate		82032000				PRO	92061103	ø 240 x 11 x 40	
				PRO	92055203	ø 284 x 22 x 39.4						
1.9 DS 60 (188.031, .051, .231, .251)	09/99→	202900 44 / 60	Ate		2193101	[–] 21931 17.9		Lkh		91054300	ø 180 x 32	Lockheed ⊖ ABS
			Ate		82027100			Lkh		91054400	ø 180 x 32	Lockheed ⊕ ABS
			Ate		82062900			Lkh		97009500		⊖ ABS
				PRO	92041503	ø 257 x 12 x 40.5		Lkh		97014900		⊕ ABS
				PRO	92068503	ø 257 x 20 x 40.5		Lkh		84054401	bore ø 22.2 ø 180 x 32	Lockheed ⊕ ABS
										94014800	ø 180,0 x 40.1	
1.9 JTD	10/01→	203000 63 / 86	Ate		2192703	[–] 21927 17.9		Lkh		91054400	ø 180 x 32	
			Ate		82030900			Lkh		97015200		
			Ate		82062900			Lkh		84054401	bore ø 22.2 ø 180 x 32	
				PRO	92068503	ø 257 x 20 x 40.5				94014800	ø 180,0 x 40.1	
1.9 JTD	06/03→	203100 74 / 101	Ate		2192703	[–] 21927 17.9		Luc		2360102	[–] 23601 13.7	⊕ rear disc brake
			Ate		82030900			Luc		82060100		⊕ rear disc brake
			Ate		82062900					91061100	ø 203.2 x 38	⊕ rear drum brake
				PRO	92068503	ø 257 x 20 x 40.5			PRO	92061103	ø 240 x 11 x 40	⊕ rear disc brake
										94019900	ø 203,2 x 48.5	⊕ rear drum brake
1.9 JTD 80 (188.237, .257, .337, .357)	09/99→	203200 59 / 80	Ate		2192703	[–] 21927 17.9		Lkh		91054400	ø 180 x 32	
			Ate		82030900			Lkh		97014900		

F - H

		kW / hp										
PUNTO (188) 09/99→												
		203200	Ate		**82062900**			Lkh		**84054401**	bore ø 22.2 ø 180 x 32	
1.9 JTD 80 (188.237, . 257, .337, .357)	09/99→	59 / 80		PRO	**92068503**	ø 257 x 20 x 40.5				**94014800**	ø 180,0 x 40.1	
PUNTO (199) 10/05→12/11 → PUNTO / GRANDE PUNTO (199), Page 358												
PUNTO (199) 03/12→												
		203300	Ate		**2542901**	[+] 25429 16.7				**91065400**	ø 228.6 x 42	
0.9	07/13→	77 / 105										
0.9	12/13→	74 / 101	Ate		**82029200**			Lkh		**97030900**		
				PRO	**92145703**	ø 257 x 22 x 40.6				**83065401**	bore ø 20.6 ø 228.6 x 42	
										94027200	ø 228,3 x 47.5	
		203400	Bos		**2397901**	[+] 23979 17.8				**91065300**	ø 203.2 x 38	Lockheed
0.9 Bifuel	03/12→	63 / 86	Bos		**82054200**					**97031500**		
				PRO	**92164603**	ø 257 x 12 x 40.5				**83065300**	bore ø 20.6 ø 203.2 x 38	
				PRO	**92145703**	ø 257 x 22 x 40.6		Lkh		**84065301**	bore ø 20.6 ø 203.2 x 38	
								Lkh		**84065300**	bore ø 19 ø 203.2 x 38	
										94027600	ø 203,2 x 48	
		203500	Ate		**2542901**	[+] 25429 16.7				**91065300**	ø 203.2 x 38	
0.9 Twinair Turbo	03/12→	63 / 86	Ate		**82029200**					**97031500**		
				PRO	**92145703**	ø 257 x 22 x 40.6				**94027200**	ø 228,3 x 47.5	
		203600	Bos		**2397901**	[+] 23979 17.8	⊕ pop			**91065300**	ø 203.2 x 38	
1.2	03/12→	51 / 69	Ate		**2542901**	[+] 25429 16.7	⊕ easy/lounge			**97031500**		
			Ate		**82029200**		⊕ easy/lounge			**94027600**	ø 203,2 x 48	
				PRO	**92145703**	ø 257 x 22 x 40.6						
		203700	Ate		**2542901**	[+] 25429 16.7				**91065300**	ø 203.2 x 38	
1.2	02/14→	49 / 67		PRO	**92145703**	ø 257 x 22 x 40.6				**94027600**	ø 203,2 x 48	
		203800	Bos		**2397901**	[+] 23979 17.8	⊕ pop			**91065400**	ø 228.6 x 42	
1.3 D Multijet	03/12→	55 / 75										
1.3 D Multijet	12/13→	59 / 80										
1.4	03/12→	55 / 75	Ate		**2542901**	[+] 25429 16.7	⊕ easy/lounge	Lkh		**97030900**		
1.4 Natural Power	03/12→	57 / 78										
			Ate		**82029200**		⊕ easy/lounge			**94027200**	ø 228,3 x 47.5	
				PRO	**92145703**	ø 257 x 22 x 40.6						
		203900	Bos		**2370901**	[+] 23709 19				**91065400**	ø 228.6 x 42	
1.3 D Multijet	03/12→	62 / 84										
1.3 D Multijet	03/12→	70 / 95	Bos		**82514000**			Lkh		**97030900**		
				PRO	**92145803**	ø 284 x 22 x 43.2				**94027200**	ø 228,3 x 47.5	
		204000	Bos		**2370901**	[+] 23709 19		Bos		**2535701**	[+] 25357 17.3	⊕ rear disc brake
1.4	03/12→	57 / 78	Bos		**2397901**	[+] 23979 17.8				**91065400**	ø 228.6 x 42	⊕ rear drum brake
			Ate		**2542901**	[+] 25429 16.7	⊕ easy/lounge	Lkh		**97030900**		⊕ rear drum brake
			Ate		**82029200**		⊕ easy/lounge		PRO	**92145903**	ø 264 x 10 x 40.6	⊕ rear disc brake
				PRO	**92145703**	ø 257 x 22 x 40.6				**94027200**	ø 228,3 x 47.5	⊕ rear drum brake
				PRO	**92145803**	ø 284 x 22 x 43.2	⊕ light alloy rim					
		204100	Bos		**2370901**	[+] 23709 19		Bos		**2535701**	[+] 25357 17.3	⊕ rear disc brake
1.4	09/12→	101 / 137	Bos		**82514000**					**91065400**	ø 228.6 x 42	⊕ rear drum brake
				PRO	**92145803**	ø 284 x 22 x 43.2		Lkh		**97030900**		⊕ rear drum brake
									PRO	**92145903**	ø 264 x 10 x 40.6	⊕ rear disc brake

→

kW / hp											
PUNTO (199) 03/12→											
204100											
1.4 09/12→ 101 / 137									94027200	ø 228,3 x 47.5	⊕ rear drum brake
204200	Bos		2370901	[+] 23709 19		Bos		2535701	[+] 25357 17.3	⊕ rear disc brake	
1.4 Bifuel 03/12→ 57 / 78	Bos		2397901	[+] 23979 17.8				91065400	ø 228.6 x 42	⊕ rear drum brake	
	Ate		2542901	[+] 25429 16.7	⊕ easy/lounge	Lkh		97030900			
	Ate		82029200		⊕ easy/lounge		PRO	92145903	ø 264 x 10 x 40.6	⊕ rear disc brake	
		PRO	92145703	ø 257 x 22 x 40.6				94027200	ø 228,3 x 47.5	⊕ rear drum brake	
		PRO	92145803	ø 284 x 22 x 43.2	⊕ light alloy rim						
204300	Bos		2370901	[+] 23709 19		Bos		2535701	[+] 25357 17.3	⊕ rear disc brake	
1.4 Multi Air 03/12→ 77 / 105	Bos		2397901	[+] 23979 17.8	⊕ pop		PRO	92145903	ø 264 x 10 x 40.6		
	Ate		2542901	[+] 25429 16.7	⊕ easy/lounge			94027200	ø 228,3 x 47.5	⊕ rear drum brake	
	Bos		82514000								
	Ate		82029200		⊕ easy/lounge						
		PRO	92145703	ø 257 x 22 x 40.6							
		PRO	92145803	ø 284 x 22 x 43.2	⊕ light alloy rim						
204400	Bos		2370901	[+] 23709 19		Bos		2535701	[+] 25357 17.3	⊕ rear disc brake	
1.4 Turbo Multi Air 03/12→ 99 / 135	Bos		82514000					91065400	ø 228.6 x 42	⊕ rear drum brake	
		PRO	92145803	ø 284 x 22 x 43.2			PRO	92145903	ø 264 x 10 x 40.6	⊕ rear disc brake	
								94027200	ø 228,3 x 47.5	⊕ rear drum brake	
PUNTO Cabriolet (176C) 04/94→06/00 → PUNTO Convertible (176C), Page 363											
PUNTO Convertible (176C) 04/94→06/00											
204500	Ben		2143602	[–] 21436 17		Ben		91049100	ø 180 x 32	Bendix	
60 1.2 04/94→06/00 43 / 58	Luc		2083302	[+] 20833 17.1	⊕ ABS	Lkh		91049200	ø 180 x 32	Lockheed	
60 1.2 05/95→06/00 44 / 60	Ben		2143603	[+] 21436 17		Ben		97005800		Bendix	
	Ben		82033600			Lkh		97009500		Lockheed	
	Luc		82062800		⊕ ABS	Ben		84049103	bore ø 20.6 ø 180 x 32	Bendix	
	Ben		82063600			Lkh		84049200	bore ø 20.6 ø 180 x 32	Lockheed	
		PRO	92041503	ø 257 x 12 x 40.5	⊕ ABS			94014800	ø 180,0 x 40.1		
		PRO	92061103	ø 240 x 11 x 40	⊖ ABS						
204600	Ate		2318101	[–] 23181 17.9	05/97→	Luc		2317703	[–] 23177 14.4	⊕ rear disc brake	
85 16V 1.2 04/97→06/00 63 / 86	Luc		2083302	[+] 20833 17.1	→04/97	Luc		82037300			
	Ate		82032000		05/97→	Luc		82062800			
	Luc		82062800		→04/97	Ben		91049100	ø 180 x 32	Bendix ⊕ rear drum brake	
	Ate		82062900		05/97→	Lkh		91049200	ø 180 x 32	Lockheed ⊕ rear drum brake	
		PRO	92041503	ø 257 x 12 x 40.5		Ben		97005800		Bendix ⊕ rear drum brake	
						Lkh		97009500		Lockheed ⊕ rear drum brake	
						Ben		84049103	bore ø 20.6 ø 180 x 32	Bendix ⊕ rear drum brake	
						Lkh		84049200	bore ø 20.6 ø 180 x 32	Lockheed ⊕ rear drum brake	
							PRO	92061103	ø 240 x 11 x 40	⊕ rear disc brake	
								94014800	ø 180,0 x 40.1	⊕ rear drum brake	
PUNTO EVO (199) 07/08→02/12											
204700	Bos		2370601	[+] 23706 17.8	Bosch	Bos		2434901	[–] 24349 17.5	⊕ rear disc brake	
1.2 10/09→02/12 48 / 65											

PUNTO EVO (199) 07/08→02/12

		204700	Ate		2542901	[+] 25429 16.7	Teves	Bos		82054300			rear disc brake
1.2	10/09→02/12	48 / 65	Bos		82054200					91065300	ø 203.2 x 38		rear drum brake
			Ate		82029200				PRO	92145903	ø 264 x 10 x 40.6		rear disc brake
				PRO	92145703	ø 257 x 22 x 40.6				94027600	ø 203,2 x 48		rear drum brake
		204800	Bos		2397901	[+] 23979 17.8	Bosch	Bos		2434901	[–] 24349 17.5		rear disc brake
1.2	10/09→02/12	51 / 69	Ate		2542901	[+] 25429 16.7	Teves	Bos		82054300			rear disc brake
			Bos		82054200					91065300	ø 203.2 x 38		rear drum brake
			Ate		82029200				PRO	92145903	ø 264 x 10 x 40.6		rear disc brake
				PRO	92145703	ø 257 x 22 x 40.6				94027600	ø 203,2 x 48		rear drum brake
		204900	Bos		2397901	[+] 23979 17.8		Bos		2434901	[–] 24349 17.5		rear disc brake
1.3 D Multijet	07/08→02/12	51 / 69	Bos		82054200			Bos		82054300			rear disc brake
				PRO	92145703	ø 257 x 22 x 40.6				91065400	ø 228.6 x 42		rear drum brake
									PRO	92145903	ø 264 x 10 x 40.6		rear disc brake
										94027200	ø 228,3 x 47.5		rear drum brake
		205000	Bos		2370601	[+] 23706 17.8	Bosch	Bos		2434901	[–] 24349 17.5		rear disc brake
1.3 D Multijet	10/09→02/12	55 / 75											
1.4	10/09→02/12	57 / 77	Ate		2542901	[+] 25429 16.7	Teves	Bos		82054300			rear disc brake
			Bos		82054200					91065400	ø 228.6 x 42		rear drum brake
			Ate		82029200				PRO	92145903	ø 264 x 10 x 40.6		rear disc brake
				PRO	92145703	ø 257 x 22 x 40.6				94027200	ø 228,3 x 47.5		rear drum brake
		205100	Bos		2370901	[+] 23709 19		Bos		2434901	[–] 24349 17.5		rear disc brake
1.3 D Multijet	10/09→02/12	62 / 84											
1.3 D Multijet	10/09→02/12	66 / 90											
1.3 D Multijet	10/09→02/12	70 / 95	Bos		82054200			Bos		82054300			rear disc brake
				PRO	92145803	ø 284 x 22 x 43.2				91065400	ø 228.6 x 42		rear drum brake
									PRO	92145903	ø 264 x 10 x 40.6		rear disc brake
										94027200	ø 228,3 x 47.5		rear drum brake
		205200	Bos		2370901	[+] 23709 19	Bosch	Bos		2434901	[–] 24349 17.5		rear disc brake
1.4	07/09→02/12	55 / 75											
1.4 LPG	06/09→02/12	57 / 78											
1.4 Natural Power	10/09→02/12	57 / 78	Ate		2542901	[+] 25429 16.7	Teves	Bos		82054300			rear disc brake
			Bos		82054200					91065400	ø 228.6 x 42		rear drum brake
			Ate		82029200				PRO	92145903	ø 264 x 10 x 40.6		rear disc brake
				PRO	92145703	ø 257 x 22 x 40.6				94027200	ø 228,3 x 47.5		rear drum brake
		205300	Ate		2542901	[+] 25429 16.7		Bos		2434901	[–] 24349 17.5		rear disc brake
1.4 16V	10/09→02/12	77 / 105	Bos		82054200			Bos		82054300			rear disc brake
				PRO	92145703	ø 257 x 22 x 40.6				91065400	ø 228.6 x 42		rear drum brake
									PRO	92145903	ø 264 x 10 x 40.6		rear disc brake
										94027200	ø 228,3 x 47.5		rear drum brake
		205400	Bos		2370901	[+] 23709 19		Bos		2535701	[+] 25357 17.3		
1.4 16V	10/09→02/12	99 / 135											
1.6 D Multijet	10/09→02/12	88 / 120	Bos		82054200			Bos		82054300			rear disc brake
				PRO	92145803	ø 284 x 22 x 43.2			PRO	92145903	ø 264 x 10 x 40.6		
		205500	Bre		2468701	[+] 24687 15.3		Bos		2535701	[+] 25357 17.3		
1.4 Abarth	07/08→02/12	132 / 180											
1.4 Abarth	10/09→02/12	120 / 163							PRO	92145903	ø 264 x 10 x 40.6		

30 kW / hp

PUNTO Van (176L) 04/96→02/00

		205600	Ben		2143602	[–] 21436 17		Ben		91049100	ø 180 x 32	Bendix
1.1	04/96→02/00	40 / 54										
1.7 D	04/96→02/00	42 / 57	Luc		2083302	[+] 20833 17.1	⊕ ABS	Lkh		91049200	ø 180 x 32	Lockheed
			Ben		2143603	[+] 21436 17		Ben		97005800		Bendix
			Ben		82033600			Lkh		97009500		Lockheed
			Luc		82062800		⊕ ABS	Ben		84049103	bore ø 20.6 ø 180 x 32	Bendix
			Ben		82063600			Lkh		84049200	bore ø 20.6 ø 180 x 32	Lockheed
				PRO	92041503	ø 257 x 12 x 40.5	⊕ ABS			94014800	ø 180,0 x 40.1	
				PRO	92061103	ø 240 x 11 x 40	⊖ ABS					
		205700	Ate		2318101	[–] 23181 17.9	05/97→	Luc		2317703	[–] 23177 14.4	⊕ rear disc brake
1.7 TD	04/96→02/00	52 / 71	Luc		2083302	[+] 20833 17.1	→04/97	Luc		82037300		
			Ate		82032000		05/97→	Luc		82062800		
			Luc		82062800		→04/97	Ben		91049100	ø 180 x 32	Bendix ⊕ rear drum brake
			Ate		82062900		05/97→	Lkh		91049200	ø 180 x 32	Lockheed ⊕ rear drum brake
				PRO	92041503	ø 257 x 12 x 40.5		Ben		97005800		Bendix ⊕ rear drum brake
								Lkh		97009500		Lockheed ⊕ rear drum brake
								Ben		84049103	bore ø 20.6 ø 180 x 32	Bendix ⊕ rear drum brake
								Lkh		84049200	bore ø 20.6 ø 180 x 32	Lockheed ⊕ rear drum brake
									PRO	92061103	ø 240 x 11 x 40	⊕ rear disc brake
										94014800	ø 180,0 x 40.1	⊕ rear drum brake
		205800	Ate		2318101	[–] 23181 17.9		Ben		91049100	ø 180 x 32	
1.7 TD	09/96→09/99	46 / 63	Ate		82032000			Ben		84049103	bore ø 20.6 ø 180 x 32	
										94014800	ø 180,0 x 40.1	

PUNTO Van (188AX) 02/00→10/09

		205900	Ben		2143602	[–] 21436 17		Lkh		91054300	ø 180 x 32	⊖ ABS
1.2 60	02/00→10/09	44 / 60	Ben		82033600			Lkh		91054400	ø 180 x 32	⊕ ABS
			Ben		82063600			Lkh		97009500		⊖ ABS
				PRO	92061103	ø 240 x 11 x 40		Lkh		97014900		⊕ ABS
										94014800	ø 180,0 x 40.1	
		206000	Ate		2192701	[+] 21927 17.9		Lkh		97014900		
1.3 D Multijet	02/05→10/09	55 / 75	Ate		82032000					94014800	ø 180,0 x 40.1	
				PRO	92068503	ø 257 x 20 x 40.5						
		206100	Ate		2192703	[–] 21927 17.9		Lkh		91054300	ø 180 x 32	⊖ ABS
1.3 JTD	06/03→10/05	51 / 69										
1.9 D 60	02/00→10/09	44 / 60	Ate		82030900			Lkh		91054400	ø 180 x 32	⊕ ABS
1.9 JTD	02/00→10/09	63 / 86	Ate		82062900			Lkh		97009500		⊖ ABS
				PRO	92068503	ø 257 x 20 x 40.5		Lkh		97014900		⊕ ABS
										94014800	ø 180,0 x 40.1	

PUNTO Van (199) 04/08→02/12

		206200	Ate		2542901	[+] 25429 16.7		Bos		2535701	[+] 25357 17.3	⊕ rear disc brake
0.9 Twinair Turbo	03/12→	63 / 86	Ate		82029200					91065300	ø 203.2 x 38	⊕ rear drum brake
				PRO	92145703	ø 257 x 22 x 40.6				97031500		⊕ rear drum brake

F - H

		kW / hp											
PUNTO Van (199) 04/08→02/12													
206200													
0.9 Twinair Turbo	03/12→	63 / 86								PRO	92145903	ø 264 x 10 x 40.6	⊕ rear disc brake
											94027200	ø 228,3 x 47.5	⊕ rear drum brake
206300			Bos		2397901	[+] 23979 17.8					91065400	ø 228.6 x 42	
1.3 D Multijet	04/08→	55 / 75	Bos		82054200			Lkh			97015200		
				PRO	92145703	ø 257 x 22 x 40.6					83065401	bore ø 20.6 ø 228.6 x 42	
											84065400	bore ø 20.6 ø 228.6 x 42	
											94027200	ø 228,3 x 47.5	
206400			Bos		2370901	[+] 23709 19		Bos			2434901	[–] 24349 17.5	⊕ rear disc brake
1.3 D Multijet	03/09→	70 / 95	Bos		82054200			Bos			82054300		⊕ rear disc brake
				PRO	92145803	ø 284 x 22 x 43.2					91065400	ø 228.6 x 42	⊕ rear drum brake
										PRO	92145903	ø 264 x 10 x 40.6	⊕ rear disc brake
											94027200	ø 228,3 x 47.5	⊕ rear drum brake
206500			Bos		2370901	[+] 23709 19					91065400	ø 228.6 x 42	
1.3 D Multijet	01/10→02/12	66 / 90		PRO	92145803	ø 284 x 22 x 43.2		Lkh			97030900		
											94027200	ø 228,3 x 47.5	
206600			Bos		2370901	[+] 23709 19		Bos			2434901	[–] 24349 17.5	
1.3 D Multijet	03/12→	62 / 84	Bos		82054200			Bos			82054300		⊕ rear disc brake
				PRO	92145803	ø 284 x 22 x 43.2				PRO	92145903	ø 264 x 10 x 40.6	
206700			Bos		2370601	[+] 23706 17.8					91065400	ø 228.6 x 42	
1.4	04/08→	57 / 78											
1.4 LPG	03/09→	57 / 78											
1.4 Natural Power	03/09→	57 / 78	Bos		82054200			Lkh			97015200		
				PRO	92145703	ø 257 x 22 x 40.6					83065401	bore ø 20.6 ø 228.6 x 42	
											84065400	bore ø 20.6 ø 228.6 x 42	
											94027200	ø 228,3 x 47.5	
QUBO (225) 02/08→													
206800			Bos		2397903	[+] 23979 17.8					91067600	ø 228.6 x 42	
1.3 D Multijet	02/08→	55 / 75											
1.4 Natural Power	10/09→	57 / 78	Bos		82054300			Lkh			97030900		
				PRO	92069603	ø 257 x 22 x 40.5					94014000	ø 228,3 x 48	
206900			Bos		2370901	[+] 23709 19					91067600	ø 228.6 x 42	
1.3 D Multijet	07/10→	70 / 95		PRO	92053503	ø 284 x 22 x 43.5		Lkh			97030900		
											94014000	ø 228,3 x 48	
207000			Bos		2397903	[+] 23979 17.8					91065300	ø 203.2 x 38	
1.4	02/08→	54 / 73	Bos		82054300						97031600		
				PRO	92069603	ø 257 x 22 x 40.5					83065300	bore ø 20.6 ø 203.2 x 38	
								Lkh			84065301	bore ø 20.6 ø 203.2 x 38	
								Lkh			84065300	bore ø 19 ø 203.2 x 38	
											94019900	ø 203,2 x 48.5	
RITMO III (198) 11/06→12/08 → BRAVO II (198), Page 334													
SCUDO (270_) 01/07→													
207100			Luc		2459501	[+] 24595 18.3		Luc			2457801	[–] 24578 16.6	
1.6 D Multijet	01/07→	66 / 90			92156900	ø 280 x 28 x 48.1		Luc			91049600	ø 254 x 57	
					92157000	ø 304 x 28 x 48	→06/11	Luc			97010300		

→

		kW / hp									
SCUDO (270_) 01/07→											
		207100									
1.6 D Multijet	01/07→	66 / 90							92157100	ø 290 x 14 x 49	
									94032900	ø 254,0 x 68	⊕ rear drum brake
		207200	Luc		2459501	[+] 24595 18.3		Luc	2457801	[–] 24578 16.6	
2.0 D Multijet	01/07→	88 / 120									
2.0 D Multijet	01/07→	100 / 136									
2.0 D Multijet	07/10→	120 / 163			92157000	ø 304 x 28 x 48	→06/11		92157100	ø 290 x 14 x 49	
2.0 D Multijet 4x4	01/07→	88 / 120									
		207300	Luc		2459501	[+] 24595 18.3		Luc	2457801	[–] 24578 16.6	
2.0 D Multijet	04/11→	94 / 128									
2.0 D Multijet 4x4	04/11→	94 / 128							92157100	ø 290 x 14 x 49	
SCUDO Box (220L) 02/96→12/06											
		207400	Luc		2026101	[+] 20261 19.3	Lucas 10/03→	Ben	91047800	ø 255 x 61	
1.6	02/96→12/06	58 / 79									
1.9 D	02/96→12/06	51 / 69	Gir		2180101	[+] 21801 19.3	Girling →10/03 ⊕ 900 kg payload	Ben	97009600		
1.9 D	04/98→12/06	51 / 69									
1.9 TD	02/96→12/06	66 / 90	Ben		2304201	[+] 23042 19	Bendix ⊕ 815 kg payload	Ben	84047800	bore ø 19 ø 255 x 61	
1.9 TD	02/98→12/06	68 / 92									
2.0	05/00→12/06	100 / 136									
2.0 JTD	12/99→12/06	69 / 94	Ben		82030200				94015000	ø 255,0 x 67	
2.0 JTD	12/02→12/06	80 / 109									
2.0 JTD 16V	05/99→12/06	80 / 109	Gir		82059500		Lucas 10/03→				
			Luc		82063300		Girling →10/03 ⊕ 900 kg payload				
			Luc		82063500		Lucas 10/03→				
					92088000	ø 257 x 20 x 40.5	Bendix -brake ⊕ 815 kg payload				
					92115000	ø 285 x 28 x 43.5	Lucas -brake 10/03→				
				PRO	92074003	ø 281 x 26 x 43.5	Girling -brake ⊕ 900 kg payload →10/03				
SCUDO Box (270_) 01/07→											
		207500	Luc		2459501	[+] 24595 18.3		Luc	2457801	[–] 24578 16.6	
1.6 D Multijet	01/07→	66 / 90	Luc		82073300			Luc	82073900		
					92156900	ø 280 x 28 x 48.1		Luc	91049600	ø 254 x 57	
					92157000	ø 304 x 28 x 48	→06/11	Luc	97010300		
									84049601	bore ø 22.2 ø 254 x 57	
									92157100	ø 290 x 14 x 49	
									94032900	ø 254,0 x 68	⊕ rear drum brake
		207600	Luc		2459501	[+] 24595 18.3		Luc	2457801	[–] 24578 16.6	
2.0 D Multijet	01/07→	88 / 120	Luc		82073300			Luc	82073900		
2.0 D Multijet	01/07→	100 / 136									
2.0 D Multijet	07/10→	120 / 163			92157000	ø 304 x 28 x 48	→06/11		92157100	ø 290 x 14 x 49	
2.0 D Multijet 4x4	01/07→	88 / 120									
		207700	Luc		2459501	[+] 24595 18.3		Luc	2457801	[–] 24578 16.6	
2.0 D Multijet	05/11→	94 / 128	Luc		82073300			Luc	82073900		
									92157100	ø 290 x 14 x 49	
SCUDO Combinato (220P) 02/96→12/06											
		207800	Luc		2026101	[+] 20261 19.3	Lucas 10/03→	Ben	91047800	ø 255 x 61	
1.6	02/96→12/06	58 / 79									
1.9 D	04/98→12/06	51 / 69	Gir		2180101	[+] 21801 19.3	Girling →10/03 ⊕ 900 kg payload	Ben	97009600		
1.9 TD	02/96→12/06	68 / 92									
1.9 TD Eco	02/96→12/06	66 / 90	Ben		2304201	[+] 23042 19	Bendix ⊕ 815 kg payload	Ben	84047800	bore ø 19 ø 255 x 61	
2.0 16V	06/00→12/06	100 / 136									
2.0 JTD	12/99→12/06	80 / 109	Ben		82030200				94015000	ø 255,0 x 67	
2.0 JTD 16V	05/99→12/06	80 / 109	Gir		82059500		Lucas 10/03→				
			Luc		82063300		Girling →10/03 ⊕ 900 kg payload				
			Luc		82063500		Lucas 10/03→				
					92088000	ø 257 x 20 x 40.5	Bendix -brake ⊕ 815 kg payload				
					92115000	ø 285 x 28 x 43.5	Lucas -brake 10/03→				

		kW / hp										
SCUDO Combinato (220P) 02/96→12/06												
		207800		PRO 92074003	ø 281 x 26 x 43.5	Girling -brake ⊕ 900 kg payload →10/03						
1.6	02/96→12/06	58 / 79										
1.9 D	04/98→12/06	51 / 69										
1.9 TD	02/96→12/06	68 / 92										
1.9 TD Eco	02/96→12/06	66 / 90										
2.0 16V	06/00→12/06	100 / 136										
2.0 JTD	12/99→12/06	80 / 109										
2.0 JTD 16V	05/99→12/06	80 / 109										
		207900	Luc	2026101	[+] 20261 19.3	Lucas	Ben	91047800	ø 255 x 61			
2.0 JTD	01/04→12/06	69 / 94	Ben	2304201	[+] 23042 19	Bendix ⊕ 815 kg payload	Ben	97009600				
			Ben	82030200			Ben	84047800	bore ø 19 ø 255 x 61			
			Gir	82059500		Lucas		94015000	ø 255,0 x 67			
			Luc	82063500		Lucas						
				92088000	ø 257 x 20 x 40.5	Bendix -brake ⊕ 815 kg payload						
				92115000	ø 285 x 28 x 43.5	Lucas -brake						
SCUDO Kasten (220L) 02/96→12/06 → SCUDO Box (220L), Page 367												
SCUDO Kasten (270_) 01/07→ → SCUDO Box (270_), Page 367												
SCUDO Platform/Chassis (270_) 01/07→												
		208000	Luc	2459501	[+] 24595 18.3		Luc	2457801	[–] 24578 16.6			
1.6 D Multijet	01/07→	66 / 90	Luc	82073300			Luc	82073900				
				92156900	ø 280 x 28 x 48.1		Luc	91049600	ø 254 x 57			
				92157000	ø 304 x 28 x 48	→06/11	Luc	97010300				
								84049601	bore ø 22.2 ø 254 x 57			
								92157100	ø 290 x 14 x 49			
								94032900	ø 254,0 x 68	⊕ rear drum brake		
		208100	Luc	2459501	[+] 24595 18.3		Luc	2457801	[–] 24578 16.6			
2.0 D Multijet	01/07→	88 / 120										
2.0 D Multijet	01/07→	100 / 136										
2.0 D Multijet	07/10→	120 / 163	Luc	82073300			Luc	82073900				
				92157000	ø 304 x 28 x 48	→06/11		92157100	ø 290 x 14 x 49			
		208200	Luc	2459501	[+] 24595 18.3		Luc	2457801	[–] 24578 16.6			
2.0 D Multijet	05/11→	94 / 128						92157100	ø 290 x 14 x 49			
SCUDO Pritsche/Fahrgestell (270_) 01/07→ → SCUDO Platform/Chassis (270_), Page 368												
SEDICI 06/06→												
		208300	Hit	2428001	[+] 24280 16	⊕ J-made		91067500	ø 220 x 35			
1.6 16V	06/06→	79 / 107										
1.6 16V 4x4	06/06→	79 / 107	Luc	2439101	[+] 24391 16	⊕ HU-made ⊕ RUS-made	Bos	97032000				
1.9 D Multijet 4x4	06/06→	88 / 120	Luc	82506500		⊕ HU-made ⊕ RUS-made	Bos	84067500	bore ø 19 ø 220 x 35			
				92156600	ø 280 x 22 x 47							
		208400	Luc	2439101	[+] 24391 16			91067500	ø 220 x 35			
1.6 16V	06/06→	88 / 120										
1.6 16V 4x4	06/06→	88 / 120	Luc	82506500			Bos	97032000				
				92156600	ø 280 x 22 x 47							
		208500	Hit	2428001	[+] 24280 16	⊕ J-made		91067500	ø 220 x 35			
1.9 D Multijet	06/06→	88 / 120	Luc	2439101	[+] 24391 16	⊕ HU-made ⊕ RUS-made	Bos	97032000				
			Luc	82506500		⊕ HU-made ⊕ RUS-made						
				92156600	ø 280 x 22 x 47							
		208600	Luc	2439101	[+] 24391 16		Ake	2172001	[+] 21720 14.6			
2.0 D Multijet	06/06→	99 / 135										
2.0 D Multijet 4x4	06/06→	99 / 135	Luc	82506500								
				92156600	ø 280 x 22 x 47							

		kW / hp											
SEICENTO (187) 01/98→01/10													
		208700	Ben		2143602	[–] 21436 17		Ben		91005900	ø 185 x 31	
0.9 (187AXA, 187AXA1A)	01/98→01/10	29 / 39										
1.1 (187AXB, 187AXB1A)	01/98→01/10	40 / 54	Ben		82033600			Fia		97011700		
			Ben		82063600			Ben		83005900	bore ø 19 ø 185 x 31	
				PRO	92061103	ø 240 x 11 x 40				94020000	ø 185,0 x 36.5	
		208800	Luc		2083302	[+] 20833 17.1		Ben		91005900	ø 185 x 31	
Elektra (187AEA1A, 187BEA1A)	01/99→01/10	30 / 41										
Elettrica	06/98→02/00	21 / 29	Luc		82062800			Fia		97011700		
Elettrica	03/00→10/02	22 / 30										
				PRO	92061103	ø 240 x 11 x 40				94020000	ø 185,0 x 36.5	
SEICENTO Van (187) 01/98→01/10													
		208900	Ben		2143602	[–] 21436 17		Ben		91005900	ø 185 x 31	
0.9 (187AXA)	01/98→01/10	29 / 39										
1.1 (187CXB/C)	01/98→01/10	40 / 54	Ben		82033600			Fia		97011700		
			Ben		82063600					94020000	ø 185,0 x 36.5	
				PRO	92061103	ø 240 x 11 x 40						
SIENA (178_) 04/96→10/07													
		209000	Ate		2377501	[–] 23775 18				91061500	ø 185 x 29	
1.0	09/98→	45 / 61										
1.0 Bipower	09/00→	48 / 65	Ate		2377601	[+] 23776 18				94020000	ø 185,0 x 36.5	
			Ate		82027100							
			Ate		82062900							
					92090300	ø 240 x 20 x 46.5						
		209100	Ate		2377501	[–] 23775 18		Lkh		91053100	ø 228.6 x 42	01/02→
1.2	09/98→	54 / 73										
1.2	09/01→	44 / 60	Ate		2377601	[+] 23776 18				91061500	ø 185 x 29	→12/01
1.2	09/01→	59 / 80										
1.6	11/00→	76 / 103	Ate		82027100			Lkh		97014700		01/02→
1.6 16V	09/98→	78 / 106										
			Ate		82062900					94014000	ø 228,3 x 48	01/02→
					92090300	ø 240 x 20 x 46.5				94020000	ø 185,0 x 36.5	→12/01
		209200	Ate		2377501	[–] 23775 18		Lkh		91053100	ø 228.6 x 42	
1.2	06/02→	57 / 78										
1.2 Flex	03/04→05/05	52 / 71	Ate		2377601	[+] 23776 18		Lkh		97014700		
1.4	01/07→	57 / 77										
1.6	04/04→	74 / 100										
1.7 D	03/02→	52 / 70	Ate		82027100					94014000	ø 228,3 x 48	
1.7 TD	02/06→	51 / 69										
1.9 D	11/00→	46 / 63	Ate		82062900							
1.9 D	11/00→	48 / 65										
					92090300	ø 240 x 20 x 46.5						
		209300								91061500	ø 185 x 29	
1.2	08/05→10/07	60 / 82										
										94020000	ø 185,0 x 36.5	
		209400	Ate		2355202	[–] 23552 18		Lkh		91053100	ø 228.6 x 42	
1.3 JTD	09/03→	51 / 70										
			Ate		82027100			Lkh		97014700		
			Ate		82062900					94014000	ø 228,3 x 48	
				PRO	92068503	ø 257 x 20 x 40.5						
		209500	Ate		2321901	[–] 23219 18	→03/98	Lkh		91053100	ø 228.6 x 42	12/01→
1.4	04/96→	51 / 69										
			Ate		2377501	[–] 23775 18	04/98→			91061500	ø 185 x 29	→12/01
			Ate		2321801	[+] 23218 18	→03/98	Lkh		97014700		12/01→
			Ate		2377601	[+] 23776 18	04/98→			94014000	ø 228,3 x 48	12/01→
			Ate		82027100					94020000	ø 185,0 x 36.5	→12/01
			Ate		82062900							

F - H

		kW / hp											
SIENA (178_) 04/96→10/07													
		209500			92090300	ø 240 x 20 x 46.5							
1.4	04/96→	51 / 69											
		209600	Ate		2321901	[–] 23219 18	→03/98	Lkh		91053100	ø 228.6 x 42	01/02→	
1.4 CAT	04/96→	51 / 69	Ate		2377501	[–] 23775 18	04/98→			91061500	ø 185 x 29	→12/01	
			Ate		2321801	[+] 23218 18	→03/98	Lkh		97014700		01/02→	
			Ate		2377601	[+] 23776 18	04/98→			94014000	ø 228,3 x 48	01/02→	
			Ate		82027100					94020000	ø 185,0 x 36.5	→12/01	
			Ate		82062900								
					92090300	ø 240 x 20 x 46.5							
		209700	Ate		2377501	[–] 23775 18		Lkh		91053100	ø 228.6 x 42		
1.5 Bipower	09/03→12/05	57 / 78	Ate		2377601	[+] 23776 18		Lkh		97014700			
			Ate		82027100					92090300	ø 240 x 20 x 46.5		
			Ate		82062900					94014000	ø 228,3 x 48		
		209800	Ate		2377501	[–] 23775 18		Lkh		91053100	ø 228.6 x 42	01/02→	
1.6 16V	09/98→	76 / 103	Ate		2377601	[+] 23776 18				91061500	ø 185 x 29	→12/01	
			Ate		82027100			Lkh		97014700		01/02→	
					92090300	ø 240 x 20 x 46.5				94014000	ø 228,3 x 48	01/02→	
										94020000	ø 185,0 x 36.5	→12/01	
SIENA 11/07→													
		209900	Ate		2355202	[–] 23552 18		Lkh		91053100	ø 228.6 x 42		
1.3 JTD	11/07→	51 / 70	Ate		82027100			Lkh		97014700			
			Ate		82062900					94014000	ø 228,3 x 48		
				PRO	92068503	ø 257 x 20 x 40.5							
		210000	Ate		2377501	[–] 23775 18		Lkh		91053100	ø 228.6 x 42		
1.4	11/07→	57 / 77	Ate		2377601	[+] 23776 18		Lkh		97014700			
			Ate		82027100					94014000	ø 228,3 x 48		
			Ate		82062900								
					92090300	ø 240 x 20 x 46.5							
STILO (192) 10/01→11/10													
		210100	Bos		2370502	[+] 23705 17.8		Bos		2371401	[–] 23714 15.5		
1.2 16V (192_XA1B)	02/02→11/06	59 / 80											
1.4 16V	01/04→11/06	70 / 95	Bos		2370581	[+] 23705 17.8		Bos		2371481	[–] 23714 15.5		
1.4 16V	03/05→11/06	66 / 90		epad					epad				
1.6 16V	05/05→11/06	77 / 105											
1.6 16V (192_XB1A)	10/01→11/06	76 / 103	Bos		82054200			Bos		82054300			
1.9 JTD (192AXS1B, 192BXS1B)	09/04→11/06	66 / 90	Bos		82063800				PRO	92034203	ø 251 x 10 x 50.5		
			Bos		82510100								
				PRO	92069603	ø 257 x 22 x 40.5							
		210200	Bos		2370802	[+] 23708 19		Bos		2371401	[–] 23714 15.5		
1.8	06/02→12/04	90 / 122											
1.8 16V (192_XC1A)	10/01→11/06	98 / 133	Bos		2370881	[+] 23708 19		Bos		2371481	[–] 23714 15.5		
1.9 D Multijet	09/05→11/06	74 / 100		epad					epad				
1.9 D Multijet	09/05→11/06	88 / 120											
1.9 JTD (192_XE1A)	10/01→11/06	85 / 115	Bos		82054200			Bos		82054300			
1.9 JTD (192_XF1A)	02/02→11/06	59 / 80	Bos		82063800				PRO	92034203	ø 251 x 10 x 50.5		
			Bos		82510100								
				PRO	92053503	ø 284 x 22 x 43.5							

→

		kW / hp											
STILO (192) 10/01→11/10													
		210300	Bos		2370802	[+] 23708 19		Bos		2371401	[–] 23714 15.5	
1.8	01/04→11/06	76 / 103										
1.8	01/04→11/06	90 / 122	Bos		2370881	[+] 23708 19		Bos		2371481	[–] 23714 15.5	
1.8 Flex	09/05→11/10	84 / 114										
			Bos		2371102	[+] 23711 18.2		Bos		82054300		
			Bos		82054200				PRO	92034203	ø 251 x 10 x 50.5	
			Bos		82063800							
			Bos		82510100							
				PRO	92053503	ø 284 x 22 x 43.5						
		210400	Bos		2371102	[+] 23711 18.2		Bos		2371401	[–] 23714 15.5	
1.9 D Multijet	09/05→11/06	110 / 150										
1.9 JTD	09/03→11/06	93 / 126	Bos		82054200			Bos		2371481	[–] 23714 15.5	
1.9 JTD	01/04→11/06	103 / 140										
1.9 JTD	04/04→11/06	100 / 136	Bos		82063800			Bos		82054300		
2.4 20V	01/04→11/06	123 / 167										
2.4 20V (192_XD1A)	10/01→11/06	125 / 170	Bos		82510100				PRO	92034203	ø 251 x 10 x 50.5	
				PRO	92107703	ø 281 x 26 x 43.5						
STILO Multi Wagon (192) 01/03→08/08													
		210500	Bos		2370802	[+] 23708 19		Bos		2371401	[–] 23714 15.5	
1.4 16V	01/04→08/08	70 / 95										
1.6 16V	01/03→08/08	76 / 103	Bos		2370881	[+] 23708 19		Bos		2371481	[–] 23714 15.5	
1.6 16V	03/05→12/07	77 / 105										
1.8 16V	01/03→08/08	98 / 133	Bos		82054200			Bos		82054300		
1.9 D	09/04→08/08	66 / 90										
1.9 D Multijet	09/05→08/08	74 / 100	Bos		82063800				PRO	92034203	ø 251 x 10 x 50.5	
1.9 D Multijet	09/05→08/08	88 / 120										
1.9 D Multijet	09/05→08/08	110 / 150	Bos		82510100							
1.9 JTD	01/03→08/08	59 / 80										
1.9 JTD	01/03→08/08	85 / 115		PRO	92053503	ø 284 x 22 x 43.5						
1.9 JTD	09/03→08/08	93 / 126										
1.9 JTD	01/04→08/08	103 / 140										
1.9 JTD	04/04→08/08	100 / 136										
		210600	Bos		2370502	[+] 23705 17.8		Bos		2371401	[–] 23714 15.5	
1.4 16V	03/05→08/08	66 / 90										
			Bos		2370581	[+] 23705 17.8		Bos		2371481	[–] 23714 15.5	
			Bos		82054200			Bos		82054300		
			Bos		82063800				PRO	92034203	ø 251 x 10 x 50.5	
			Bos		82510100							
				PRO	92069603	ø 257 x 22 x 40.5						
		210700	Bos		2370802	[+] 23708 19		Bos		2371401	[–] 23714 15.5	
1.8	01/04→08/08	76 / 103										
1.8	01/04→08/08	90 / 122	Bos		2370881	[+] 23708 19		Bos		2371481	[–] 23714 15.5	
1.8	09/05→08/08	84 / 114										
			Bos		2371102	[+] 23711 18.2	07/07→		PRO	92034203	ø 251 x 10 x 50.5	
				PRO	92053503	ø 284 x 22 x 43.5						
		210800	Bos		2371102	[+] 23711 18.2		Bos		2371401	[–] 23714 15.5	
2.4 20V	01/04→08/08	123 / 167										
			Bos		82054200			Bos		2371481	[–] 23714 15.5	
			Bos		82063800			Bos		82054300		
			Bos		82510100				PRO	92034203	ø 251 x 10 x 50.5	
				PRO	92107703	ø 281 x 26 x 43.5						
STRADA Pickup (178E) 02/98→													
		210900	Ate		2355202	[–] 23552 18		Ben		91064700	ø 228.6 x 42	
1.0	07/09→	55 / 75										
1.2	06/99→	54 / 73	Ate		82027100			Ben		97006700		
1.2	04/03→	44 / 60										
1.2	06/04→	49 / 67	Ate		82062900					94014000	ø 228,3 x 48	
1.2 Trekking	11/05→	60 / 82										
1.3 D Multijet	05/06→	62 / 85		PRO	92068503	ø 257 x 20 x 40.5						
1.4	01/06→	60 / 82										
1.4	01/10→06/12	63 / 85										
1.4 Flex	06/05→	60 / 82										
1.4 Flex	01/06→	63 / 86										
1.5	09/98→01/03	56 / 76										
1.5	07/99→02/04	57 / 78										
1.5 Álcool	07/99→02/04	55 / 75										

F - H

		kW / hp												
STRADA Pickup (178E) 02/98→														
1.6	11/98→	68 / 92	Ate		**2355202**	[–] 23552 18		Ben		**91064700**	ø 228.6 x 42	
1.6 16V	02/98→02/03	78 / 106										
1.6 Bipower	11/10→	87 / 118	Ate		**82027100**			Ben		**97006700**		
1.6 Trekking	11/05→	76 / 103										
1.7 TD	06/99→	51 / 69	Ate		**82062900**					**94014000**	ø 228,3 x 48	
1.7 TD	10/06→12/08	52 / 70										
1.8	08/05→07/10	82 / 112			**92068503**	ø 257 x 20 x 40.5						
1.8 Flex	06/04→	81 / 110										
1.8 Flex	08/05→07/10	84 / 114										
1.9 D	12/00→	46 / 63										
1.9 JTD	04/03→	59 / 80										
		211000	Ate		**2355202**	[–] 23552 18				**91059900**	ø 228.6 x 42	
1.3 D Multijet	10/10→	70 / 95										
1.6	11/10→	85 / 116	Ate		**82027100**			Ben		**91064700**	ø 228.6 x 42	
1.8	08/10→	97 / 132										
			Ate		**82062900**			Ben		**97006700**		
					**92068503**	ø 257 x 20 x 40.5				**94014000**	ø 228,3 x 48	
		211100	Ate		**82062900**			Ben		**97006700**		
1.6	09/09→	86 / 117										
1.8	01/03→05/04	76 / 103										
1.8	09/06→12/11	83 / 112										
1.8 Flex	08/10→	97 / 132										
STRADA Pick-up (178E) 02/98→ → STRADA Pickup (178E), Page 371														
ULYSSE (179AX) 08/02→06/11														
		211200	Luc		**2026101**	[+] 20261 19.3		Luc		**2096110**	[–] 20961 17.4	
2.0	08/02→06/11	100 / 136										
2.0 D Multijet	05/06→06/11	88 / 120	Luc		**82055400**		2x			**82062700**		
2.0 D Multijet	05/06→06/11	100 / 136										
2.0 JTD	08/02→08/06	80 / 109	Gir		**82059500**			Luc		**82062800**		
2.0 JTD	05/03→08/06	79 / 107										
2.2 JTD	08/02→08/06	94 / 128	Luc		**82063500**					**92118203**	ø 272 x 12 x 28	
					**92115000**	ø 285 x 28 x 43.5						
		211300	Luc		**2483901**	[+] 24839 19.4		Luc		**2096110**	[–] 20961 17.4	
2.2 D Multijet	03/08→06/11	125 / 170										
2.2 JTD	03/08→06/11	120 / 163	Luc		**82055400**		2x			**82062700**		
			Luc		**82513300**			Luc		**82062800**		
										**92118203**	ø 272 x 12 x 28	
		211400	Bre		**2357501**	[+] 23575 16		Luc		**2096110**	[–] 20961 17.4	
3.0	08/02→06/11	150 / 204										
			Luc		**82055400**		2x			**82062700**		
			Bre		**82072400**			Luc		**82062800**		
					**92118100**	ø 310 x 32 x 43.5				**92118203**	ø 272 x 12 x 28	
ULYSSE (220) 06/94→08/02														
		211500	Gir		**2180101**	[+] 21801 19.3	Girling	Ate		**2127501**	[+] 21275 16.9	⊕ rear disc brake
1.8 (220.BB5)	05/97→08/02	73 / 99										
1.9 TD (220AH5)	02/95→08/02	66 / 90	Ben		**2304201**	[+] 23042 19	Bendix	Ate		**82030900**		⊕ rear disc brake
2.0 (220.AC5)	06/94→08/02	89 / 121										
2.0 16V	05/98→09/00	97 / 132	Ben		**82030200**			Ate		**82062900**		
			Luc		**82055400**		2x	Ben		**91047800**	ø 255 x 61	⊕ rear drum brake
			Luc		**82063300**			Ben		**97009600**		⊕ rear drum brake
					92088000	ø 257 x 20 x 40.5	Bendix	Ben		**84047800**	bore ø 19 ø 255 x 61	⊕ rear drum brake
					92074003	ø 281 x 26 x 43.5	Lucas			**92074100**	ø 295 x 10 x 56	⊕ rear disc brake
										94015000	ø 255,0 x 67	⊕ rear drum brake
								Ate		**91054700**	ø 180 x 31	⊕ rear disc brake
										97012500		
		211600	Gir		**2180101**	[+] 21801 19.3		Ate		**2127501**	[+] 21275 16.9	
2.0 16V	09/00→08/02	100 / 136										
2.0 JTD	10/99→08/02	80 / 109	Luc		**82055400**		2x	Ate		**82030900**		
2.0 JTD 16V	05/99→08/02	80 / 109										
2.0 Turbo (220.AD5)	06/94→08/02	108 / 147	Luc		**82063300**			Ate		**82062900**		
2.1 TD	03/96→10/99	80 / 109										
					92074003	ø 281 x 26 x 43.5				**92074100**	ø 295 x 10 x 56	

→

		kW / hp											
ULYSSE (220) 06/94→08/02													
		211600							Ate		91054700	ø 180 x 31	
2.0 16V	09/00→08/02	100 / 136											
2.0 JTD	10/99→08/02	80 / 109									97012500		
2.0 JTD 16V	05/99→08/02	80 / 109											
2.0 Turbo (220.AD5)	06/94→08/02	108 / 147											
2.1 TD	03/96→10/99	80 / 109											
UNO (146A/E) 10/88→06/01													
		211700	Ben		2095005	[–] 20950 18			Ben		91005900	ø 185 x 31	Bendix
1.0	08/90→06/01	35 / 48											
1.0 iE	05/98→08/00	34 / 46	Ben		2095006	[+] 20950 18			Lkh		91048400	ø 185 x 31	Lockheed
55 1.0	11/93→08/00	41 / 56											
			Ben		82027000				Fia		97002500		
					92019300	ø 227 x 10.8 x 45.8			Lkh		97010800		
											94006400	ø 185,3 x 35.7	
		211800	Ben		2095005	[–] 20950 18			Ben		91005900	ø 185 x 31	Bendix
1.4	10/88→03/01	49 / 67											
			Ben		2095006	[+] 20950 18			Lkh		91048400	ø 185 x 31	Lockheed
			Ben		82027000				Fia		97002500		
					92019300	ø 227 x 10.8 x 45.8			Lkh		97010800		
									Ben		83005900	bore ø 19 ø 185 x 31	Bendix
									Lkh		84048400	bore ø 19 ø 185 x 31	Lockheed
											94006400	ø 185,3 x 35.7	
		211900	Ben		2095005	[–] 20950 18	Bendix		Ben		91005900	ø 185 x 31	Bendix
1.7 D	11/94→08/00	43 / 58											
			Luc		2083302	[+] 20833 17.1	Lucas		Fia		97002500		
			Ben		2095006	[+] 20950 18	Bendix		Ben		83005900	bore ø 19 ø 185 x 31	Bendix
			Ben		82027000						94006400	ø 185,3 x 35.7	
			Luc		82062800								
					92019300	ø 227 x 10.8 x 45.8	Bendix						
					92034500	ø 240 x 12 x 46.5	Lucas						
UNO (146 A/E) 08/00→04/10													
		212000	Ate		2119301	[–] 21193 18			Ben		91005900	ø 185 x 31	
1.2	08/00→04/10	44 / 60											
					92034500	ø 240 x 12 x 46.5			Fia		97002500		
											94006400	ø 185,3 x 35.7	

		kW / hp											
PALIO Estate 01/02→													
		212100	Ate		2355202	[–] 23552 18							
1.5	01/02→	63 / 84											
PALIO Hatchback 01/02→													
		212200	Bos		2370503	[–] 23705 17.8							
1.3	01/02→	44 / 59											
1.3	01/02→	59 / 79											
1.5	01/02→	63 / 84											
PALIO Kombi 01/02→ → PALIO Estate, Page 373													
PALIO Schrägheck 01/02→ → PALIO Hatchback, Page 373													
PALIO Weekend 01/02→ → PALIO Estate, Page 373													
SIENA 01/03→													
		212300	Ate		2377501	[–] 23775 18							
1.3	01/03→	44 / 59											
1.3	01/03→	59 / 79											

30 kW / hp											
B-MAX 10/12→											
		212400	TRW		**2513402**	[–] 25134 16.7	→2014-07			**91079800**	ø 228.6 x 42
1.0 EcoBoost	10/12→	74 / 100		PRO	**92252403**	ø 278 x 23 x 43.9					
1.0 EcoBoost	10/12→	88 / 120									
1.0 EcoBoost	12/12→	92 / 125									
1.4	10/12→	66 / 90									
1.4 LPG	08/13→	63 / 86									
1.4 LPG	08/13→	66 / 90									
1.5 TDCi	10/12→	55 / 75									
1.6 TDCi	10/12→	70 / 95									
1.6 Ti	10/12→	77 / 105									
C-MAX (DM2) 02/07→ → C-MAX, Page 374											
C-MAX II 12/10→											
		212500	Ate		**2372301**	[–] 23723 18.2		Ate		**2521201**	[–] 25212 16.1
1.0 EcoBoost	10/12→	74 / 100									
1.0 EcoBoost	10/12→	92 / 125	Ate	epad	**2372381**	[–] 23723 18.2		Ate	epad	**2521281**	[–] 25212 16.1
1.6 Flexifuel	02/11→	88 / 120									
1.6 LPG	02/12→	88 / 120									
1.6 TDCi	12/10→	70 / 95	Ate		**82032000**			Ate		**82062900**	
1.6 TDCi	12/10→	85 / 115									
1.6 Ti	12/10→	63 / 85	Ate		**82062900**			Ate		**82503500**	
1.6 Ti	12/10→	77 / 105									
1.6 Ti	12/10→	92 / 125		PRO	**92237703**	ø 278 x 25 x 48.6			PRO	**92238903**	ø 279.8 x 11 x 50.8
		212600	Ate		**2372301**	[–] 23723 18.2		Ate		**2521201**	[–] 25212 16.1
1.6 EcoBoost	12/10→	110 / 150									
1.6 EcoBoost	12/10→	134 / 182	Ate	epad	**2372381**	[–] 23723 18.2		Ate	epad	**2521281**	[–] 25212 16.1
2.0 TDCi	12/10→	120 / 163									
2.0 TDCi	02/11→	85 / 115									
2.0 TDCi	02/11→	100 / 136	Ate		**82032000**			Ate		**82062900**	
2.0 TDCi	02/11→	103 / 140									
			Ate		**82062900**			Ate		**82503500**	
				PRO	**92141303**	ø 300 x 25 x 48.5			PRO	**92238903**	ø 279.8 x 11 x 50.8
C-MAX 02/07→											
		212700	Ate		**2372301**	[–] 23723 18.2		Ate		**2413701**	[–] 24137 16.7
1.6	02/07→	74 / 100									
1.6 TDCi	02/07→	66 / 90	Ate	epad	**2372381**	[–] 23723 18.2		Ate	epad	**2413781**	[–] 24137 16.7
1.6 TDCi	02/07→	74 / 101									
1.6 TDCi	02/07→	80 / 109									
1.8	02/07→	90 / 122	Ate		**82032000**			Ate		**82062900**	
1.8	02/07→	92 / 125									
1.8 Flexifuel	02/07→	92 / 125	Ate		**82062900**			Ate		**82503500**	
				PRO	**92141203**	ø 278 x 25 x 48.5			PRO	**92133703**	ø 265 x 11 x 40.8
		212800	Ate		**2372301**	[–] 23723 18.2		Ate		**2413701**	[–] 24137 16.7
1.8 TDCi	02/07→	85 / 115									
2.0	02/07→	107 / 145	Ate	epad	**2372381**	[–] 23723 18.2		Ate	epad	**2413781**	[–] 24137 16.7
2.0 CNG	04/09→	107 / 145									
2.0 LPG	06/08→	107 / 145									
2.0 TDCi	02/07→	98 / 133	Ate		**82032000**			Ate		**82062900**	
2.0 TDCi	02/07→	100 / 136									
2.0 TDCi	02/08→	81 / 110	Ate		**82062900**			Ate		**82503500**	
				PRO	**92141303**	ø 300 x 25 x 48.5			PRO	**92133803**	ø 280 x 10.9 x 40.8
COUGAR (EC_) 08/98→12/01											
		212900	Ate		**2139408**	[–] 21394 18.5		Bos		**2341007**	[–] 23410 15.7
2.0 16V	08/98→12/01	96 / 131	Ate		**2307104**	[+] 23071 18.5		Bos		**2341008**	[+] 23410 15.7
			Ate		**82032100**			Bos		**82031600**	
			Ate		**82062900**				PRO	**92063603**	ø 253 x 20 x 43.7
				PRO	**92063503**	ø 260 x 24 x 47					
		213000	Ate		**2139408**	[–] 21394 18.5		Bos		**2341007**	[–] 23410 15.7
2.5 ST 200	01/00→12/01	151 / 205									
2.5 V6 24V	08/98→12/01	125 / 170	Ate		**2307104**	[+] 23071 18.5		Bos		**2341008**	[+] 23410 15.7
2.5 V6 24V	06/00→12/01	125 / 170	Ate		**82032100**			Bos		**82031600**	
			Ate		**82062900**				PRO	**92063603**	ø 253 x 20 x 43.7
					92075400	ø 278 x 24 x 47					
COURIER Box (J5_, J3_) 02/96→10/99 → FIESTA Box (J5_, J3_), Page 381											
COURIER Box (JV_) 05/98→ → FIESTA Box (JV_), Page 381											
COURIER Camionnette (J5_, J3_) 02/96→10/99 → FIESTA Box (J5_, J3_), Page 381											
COURIER Furgonato (J5_, J3_) 02/96→10/99 → FIESTA Box (J5_, J3_), Page 381											

		kW / hp												
COURIER Kasten (J5_, J3_) 02/96→10/99 → FIESTA Box (J5_, J3_), Page 381														
COURIER Kasten (JV_) 05/98→ → FIESTA Box (JV_), Page 381														
ECOSPORT 01/12→														
		213100	Ate		2372301	[–] 23723 18.2								
1.0 Ti-VCT Ecoboost	08/12→	88 / 120												
1.5 TDCi	10/13→	66 / 90	Ate		2372381	[–] 23723 18.2								
1.5 Ti	10/13→	82 / 112		epad										
1.6	08/12→	81 / 110												
1.6 Flex	08/12→	81 / 110	Ate		82032000									
1.6 Flex	08/12→	85 / 116												
1.6 Flex 4x4	08/12→	81 / 110												
2.0	01/12→	105 / 143												
2.0 Flex	08/12→	104 / 141												
2.0 Flex	08/12→	108 / 147												
2.0 Flex 4x4	08/12→	104 / 141												
EcoBoost 1.0	10/13→	92 / 125												
ESCAPE II 03/13→ → KUGA II, Page 396														
ESCAPE 02/01→ → MAVERICK, Page 396														
ESCORT '95 Box (AVL) 01/95→														
		213200	Ben		2117105	[–] 21171 18	→06/97			91046100	ø 228.6 x 45			
1.4	01/95→	54 / 73												
1.8 D	01/95→	44 / 60	Ben		2330002	[–] 23300 18	06/97→		Luc	97007000				
1.8 TD	01/95→	66 / 90												
1.8 Turbo D	12/95→06/01	51 / 70	Ben		82030200					94007300	ø 228,6 x 53.5			
				PRO	92051003	ø 239.5 x 20 x 43								
ESCORT '95 Courrier (AVL) 01/95→ → ESCORT '95 Box (AVL), Page 375														
ESCORT '95 Kasten (AVL) 01/95→ → ESCORT '95 Box (AVL), Page 375														
ESCORT VII (GAL, AAL, ABL) 01/01→08/02														
		213300	Ben		2330002	[–] 23300 18			Luc	91048800	ø 180 x 32	Ø 180 mm		
1.6	01/01→08/02	70 / 95												
			Ben		82030200				Luc	91051500	ø 203.2 x 38	Ø 203 mm		
				PRO	92051003	ø 239.5 x 20 x 43			Luc	97009100		Ø 203 mm ⊕ ABS		
										94018500	ø 180,0 x 44	Ø 180 mm ⊕ rear drum brake		
ESCORT VII Cabriolet (ALL) 02/95→08/00 → ESCORT VII Convertible (ALL), Page 375														
ESCORT VII Clipper (GAL, ANL) 01/95→02/99 → ESCORT VII Estate (GAL, ANL), Page 375														
ESCORT VII Convertible (ALL) 02/95→08/00														
		213400	Ben		2117105	[–] 21171 18	→06/97		Ate	2183201	[–] 21832 15	⊕ rear disc brake		
1.6 16V XR3i	02/95→09/99	66 / 90												
			Ben		2330002	[–] 23300 18	06/97→		Luc	91043700	ø 180 x 32	⊕ rear drum brake ⊖ ABS		
			Ben		82030200				Luc	91043800	ø 203.2 x 38	⊕ rear drum brake ⊕ ABS		
				PRO	92051003	ø 239.5 x 20 x 43				92064400	ø 270 x 10 x 62.7	⊕ rear disc brake		
										94012900	ø 180,0 x 44	⊕ rear drum brake ⊖ ABS		
										94013000	ø 203,0 x 49	⊕ rear drum brake ⊕ ABS		
		213500	Ate		2090802	[–] 20908 18			Ate	2183201	[–] 21832 15	⊕ rear disc brake		
1.8 16V XR3i	02/95→08/00	96 / 130												
			Ate		2090702	[+] 20907 18				92064400	ø 270 x 10 x 62.7	⊕ rear disc brake		
					82052200									
			Ate		82062900									
					92064300	ø 260 x 24 x 43.8								
		213600	Ben		2117105	[–] 21171 18	→06/97		Luc	91048800	ø 180 x 32	⊕ rear drum brake Ø 180 mm		
1.8 Turbo D	10/96→08/99	51 / 70												
			Ben		2330002	[–] 23300 18	06/97→		Luc	91051500	ø 203.2 x 38	⊕ rear drum brake Ø 203 mm		
			Ben		82030200				Luc	97009100		Ø 203 mm		
				PRO	92051003	ø 239.5 x 20 x 43				94018500	ø 180,0 x 44	Ø 180 mm ⊕ rear drum brake		
										94019000	ø 203,0 x 49	Ø 203 mm ⊕ rear drum brake		
ESCORT VII Estate (GAL, ANL) 01/95→02/99														
		213700	Ben		2117105	[–] 21171 18	→06/97		Luc	91043700	ø 180 x 32	⊕ rear drum brake ⊖ ABS →04/96		
1.3	01/95→01/99	44 / 60												
			Ben		2330002	[–] 23300 18	06/97→		Luc	91048800	ø 180 x 32	⊖ ABS ⊕ rear drum brake 05/96→		

ESCORT VII Estate (GAL, ANL) 01/95→02/99

			kW / hp											
1.3	01/95→01/99	213700	44 / 60	Ben		82030200			Luc		91051500	ø 203.2 x 38	⊕ rear drum brake ⊕ ABS
						92050900	ø 239.5 x 10 x 43		Luc		97009100		Ø 203 mm
					PRO	92051003	ø 239.5 x 20 x 43	⊕ ABS	Luc		83043700	bore ø 20.6 ø 180 x 32	⊕ rear drum brake ⊖ ABS →04/96
									Luc		84043700	bore ø 20.6 ø 180 x 32	⊕ rear drum brake ⊖ ABS →04/96
											94012900	ø 180,0 x 44	Ø 180 mm ⊕ rear drum brake →08/95
											94013000	ø 203,0 x 49	Ø 203 mm ⊕ rear drum brake →08/95
											94018500	ø 180,0 x 44	Ø 180 mm ⊕ rear drum brake 08/95→
											94019000	ø 203,0 x 49	Ø 203 mm ⊕ rear drum brake 08/95→
1.4	01/95→02/99	213800	55 / 75	Ben		2117105	[–] 21171 18	→06/97	Luc		91043700	ø 180 x 32	⊕ rear drum brake ⊖ ABS →04/96
				Ben		2330002	[–] 23300 18	06/97→	Luc		91048800	ø 180 x 32	⊖ ABS ⊕ rear drum brake 05/96→
				Ben		82030100		⊖ ABS	Luc		91051500	ø 203.2 x 38	⊕ rear drum brake ⊕ ABS
				Ben		82030200			Luc		97009100		Ø 203 mm
					PRO	92051003	ø 239.5 x 20 x 43		Luc		83043700	bore ø 20.6 ø 180 x 32	⊕ rear drum brake ⊖ ABS →04/96
									Luc		84043700	bore ø 20.6 ø 180 x 32	⊕ rear drum brake ⊖ ABS →04/96
											94012900	ø 180,0 x 44	Ø 180 mm disc-/drum brake →08/95
											94013000	ø 203,0 x 49	Ø 203 mm ⊕ rear drum brake →08/95
											94018500	ø 180,0 x 44	Ø 180 mm ⊕ rear drum brake 08/95→
											94019000	ø 203,0 x 49	Ø 203 mm ⊕ rear drum brake 08/95→
1.6 16V	01/95→02/99	213900	66 / 90	Ben		2117105	[–] 21171 18	→06/97	Luc		91043800	ø 203.2 x 38	⊕ rear drum brake ⊖ ABS Ø 203 mm
				Ben		2330002	[–] 23300 18	06/97→	Luc		91048800	ø 180 x 32	⊕ rear drum brake ⊖ ABS Ø 180 mm
				Ben		82030200			Luc		91051500	ø 203.2 x 38	⊕ rear drum brake ⊕ ABS Ø 203 mm
					PRO	92051003	ø 239.5 x 20 x 43		Luc		97009100		Ø 203 mm ⊕ ABS
											84043800	bore ø 19 ø 203.2 x 38	⊕ rear drum brake ⊖ ABS Ø 203 mm
											94012900	ø 180,0 x 44	Ø 180 mm ⊕ rear drum brake →08/95
											94013000	ø 203,0 x 49	Ø 203 mm ⊕ rear drum brake →08/95
											94018500	ø 180,0 x 44	Ø 180 mm ⊕ rear drum brake 08/95→
											94019000	ø 203,0 x 49	Ø 203 mm ⊕ rear drum brake 08/95→
1.8 16V	01/95→02/99	214000	85 / 115	Ben		2117105	[–] 21171 18	→06/97	Luc		91051500	ø 203.2 x 38	⊕ rear drum brake
				Ben		2330002	[–] 23300 18	06/97→	Luc		97009100		Ø 203 mm
				Ben		82030200					94013000	ø 203,0 x 49	⊕ rear drum brake →08/95
					PRO	92051003	ø 239.5 x 20 x 43				94019000	ø 203,0 x 49	⊕ rear drum brake 08/95→
1.8 D 1.8 TD	01/95→02/99 01/95→02/99	214100	44 / 60 66 / 90	Ben		2117105	[–] 21171 18	→06/97	Luc		91048800	ø 180 x 32	⊕ rear drum brake Ø 180 mm
				Ben		2330002	[–] 23300 18	06/97→	Luc		91051500	ø 203.2 x 38	⊕ rear drum brake Ø 203 mm
				Ben		82030200			Luc		97009100		Ø 203 mm
					PRO	92051003	ø 239.5 x 20 x 43				94012900	ø 180,0 x 44	⊕ rear drum brake →08/95
											94013000	ø 203,0 x 49	⊕ rear drum brake →08/95
											94018500	ø 180,0 x 44	⊕ rear drum brake 08/95→
											94019000	ø 203,0 x 49	⊕ rear drum brake 08/95→
1.8 Turbo D	12/95→02/99	214200	51 / 70	Ben		2117105	[–] 21171 18	→06/97	Ate		2183201	[–] 21832 15	⊕ rear disc brake
				Ben		2330002	[–] 23300 18	06/97→	Luc		91048800	ø 180 x 32	⊕ rear drum brake Ø 180 mm

→

		kW / hp									
ESCORT VII Estate (GAL, ANL) 01/95→02/99											
1.8 Turbo D	12/95→02/99	214200 51 / 70	Ben		82030200			Luc		91051500	ø 203.2 x 38	⊕ rear drum brake Ø 203 mm
				PRO	92051003	ø 239.5 x 20 x 43		Luc		97009100		Ø 203 mm
										94018500	ø 180,0 x 44	⊕ rear drum brake
										94019000	ø 203,0 x 49	⊕ rear drum brake
ESCORT VII Kombi (GAL, ANL) 01/95→02/99 → ESCORT VII Estate (GAL, ANL), Page 375											
ESCORT VII Saloon (GAL, AFL) 01/95→02/99											
1.3	01/95→02/99	214300 44 / 60	Ben		2117105	[–] 21171 18	→06/97	Luc		91043700	ø 180 x 32	⊕ rear drum brake →04/96 ⊖ ABS
			Ben		2330002	[–] 23300 18	06/97→	Luc		91048800	ø 180 x 32	⊕ rear drum brake ⊖ ABS 05/96→
			Ben		82030200			Luc		91051500	ø 203.2 x 38	⊕ rear drum brake ⊕ ABS
					92050900	ø 239.5 x 10 x 43		Luc		97009100		Ø 203 mm ⊕ ABS
				PRO	92051003	ø 239.5 x 20 x 43	⊕ ABS	Luc		83043700	bore ø 20.6 ø 180 x 32	⊖ ABS ⊕ rear drum brake →04/96
								Luc		84043700	bore ø 20.6 ø 180 x 32	⊕ rear drum brake ⊖ ABS →04/96
										94012900	ø 180,0 x 44	Ø 180 mm ⊕ rear drum brake →08/95
										94013000	ø 203,0 x 49	Ø 203 mm ⊕ rear drum brake →08/95
										94018500	ø 180,0 x 44	Ø 180 mm ⊕ rear drum brake 08/95→
										94019000	ø 203,0 x 49	Ø 203 mm ⊕ rear drum brake 08/95→
1.4	01/95→02/99	214400 55 / 75	Ben		2117105	[–] 21171 18	→06/97	Luc		91043700	ø 180 x 32	⊕ rear drum brake →04/96 ⊖ ABS
			Ben		2330002	[–] 23300 18	06/97→	Luc		91048800	ø 180 x 32	⊕ rear drum brake ⊕ ABS 05/96→
			Ben		82030100		⊖ ABS	Luc		91051500	ø 203.2 x 38	⊕ rear drum brake ⊕ ABS
			Ben		82030200			Luc		97009100		Ø 203 mm ⊕ ABS
				PRO	92051003	ø 239.5 x 20 x 43		Luc		83043700	bore ø 20.6 ø 180 x 32	⊖ ABS ⊕ rear drum brake →04/96
								Luc		84043700	bore ø 20.6 ø 180 x 32	⊕ rear drum brake ⊖ ABS →04/96
										94012900	ø 180,0 x 44	Ø 180 mm ⊕ rear drum brake →08/95
										94013000	ø 203,0 x 49	Ø 203 mm ⊕ rear drum brake →08/95
										94018500	ø 180,0 x 44	Ø 180 mm ⊕ rear drum brake 08/95→
										94019000	ø 203,0 x 49	Ø 203 mm ⊕ rear drum brake 08/95→
1.6 i 16V	01/95→02/99	214500 66 / 90	Ben		2117105	[–] 21171 18	→06/97	Luc		91048800	ø 180 x 32	⊕ rear drum brake Ø 180 mm
			Ben		2330002	[–] 23300 18	06/97→	Luc		91051500	ø 203.2 x 38	⊕ rear drum brake Ø 203 mm
			Ben		82030200			Luc		97009100		
				PRO	92051003	ø 239.5 x 20 x 43				94012900	ø 180,0 x 44	Ø 180 mm ⊕ rear drum brake →08/95
										94013000	ø 203,0 x 49	Ø 203 mm ⊕ rear drum brake →08/95
										94018500	ø 180,0 x 44	Ø 180 mm ⊕ rear drum brake 08/95→
										94019000	ø 203,0 x 49	Ø 203 mm ⊕ rear drum brake 08/95→
1.8 16V	01/95→02/99	214600 85 / 115	Ben		2117105	[–] 21171 18	→06/97	Luc		91051500	ø 203.2 x 38	⊕ rear drum brake
			Ben		2330002	[–] 23300 18	06/97→	Luc		97009100		Ø 203 mm
			Ben		82030200					94013000	ø 203,0 x 49	⊕ rear drum brake →08/95
				PRO	92051003	ø 239.5 x 20 x 43				94019000	ø 203,0 x 49	⊕ rear drum brake 08/95→
1.8 TD	01/95→02/99	214700 66 / 90	Ben		2117105	[–] 21171 18	→06/97	Luc		91048800	ø 180 x 32	⊕ rear drum brake Ø 180 mm
			Ben		2330002	[–] 23300 18	06/97→	Luc		91051500	ø 203.2 x 38	⊕ rear drum brake Ø 203 mm
			Ben		82030200		→06/97	Luc		97009100		Ø 203 mm
				PRO	92051003	ø 239.5 x 20 x 43				94012900	ø 180,0 x 44	Ø 180 mm ⊕ rear drum brake →08/95

		kW / hp											
ESCORT VII Saloon (GAL, AFL) 01/95→02/99													
1.8 TD	01/95→02/99	214700 66 / 90								94013000	ø 203,0 x 49	Ø 203 mm ⊕ rear drum brake →08/95
										94018500	ø 180,0 x 44	Ø 180 mm ⊕ rear drum brake 08/95→
										94019000	ø 203,0 x 49	Ø 203 mm ⊕ rear drum brake 08/95→
1.8 Turbo D	12/95→02/99	214800 51 / 70	Ben		2117105	[–] 21171 18	→06/97	Luc		91048800	ø 180 x 32	⊕ rear drum brake Ø 180 mm
			Ben		2330002	[–] 23300 18	06/97→	Luc		91051500	ø 203.2 x 38	⊕ rear drum brake Ø 203 mm
			Ben		82030200			Luc		97009100		Ø 203 mm
				PRO	92051003	ø 239.5 x 20 x 43				94018500	ø 180,0 x 44	Ø 180 mm ⊕ rear drum brake
										94019000	ø 203,0 x 49	Ø 203 mm ⊕ rear drum brake
ESCORT VII Stufenheck (GAL, AFL) 01/95→02/99 → ESCORT VII Saloon (GAL, AFL), Page 377													
ESCORT CLASSIC (AAL, ABL) 10/98→07/00													
1.6 16V	10/98→07/00	214900 66 / 90	Ben		2330002	[–] 23300 18		Luc		91048800	ø 180 x 32	⊕ rear drum brake
1.8 TD	10/98→07/00	66 / 90	Ben		82030200			Luc		91051500	ø 203.2 x 38	⊕ rear drum brake
				PRO	92051003	ø 239.5 x 20 x 43		Luc		97010200		
										94018500	ø 180,0 x 44	Ø 180 mm ⊕ rear drum brake
										94019000	ø 203,0 x 49	Ø 203 mm ⊕ rear drum brake
ESCORT CLASSIC Turnier (ANL) 02/99→07/00													
1.6 16V	02/99→07/00	215000 66 / 90	Ben		2330002	[–] 23300 18		Luc		91051500	ø 203.2 x 38	⊕ rear drum brake
1.8 TD	02/99→07/00	66 / 90	Ben		82030200			Luc		97010200		
				PRO	92051003	ø 239.5 x 20 x 43				94019000	ø 203,0 x 49	⊕ rear drum brake
ESCORT Mk VII (GAL, AAL, ABL) 01/01→08/02 → ESCORT VII (GAL, AAL, ABL), Page 375													
ESCORT Mk VII Cabriolet (ALL) 02/95→08/00 → ESCORT VII Convertible (ALL), Page 375													
ESCORT Mk VII Convertible (ALL) 02/95→08/00 → ESCORT VII Convertible (ALL), Page 375													
ESCORT Mk VII Estate (GAL, ANL) 01/95→02/99 → ESCORT VII Estate (GAL, ANL), Page 375													
ESCORT Mk VII Kombi (GAL, ANL) 01/95→02/99 → ESCORT VII Estate (GAL, ANL), Page 375													
ESCORT Mk VII Saloon (GAL, AFL) 01/95→02/99 → ESCORT VII Saloon (GAL, AFL), Page 377													
ESCORT Mk VII Stufenheck (GAL, AFL) 01/95→02/99 → ESCORT VII Saloon (GAL, AFL), Page 377													
FIESTA IV (JA_, JB_) 08/95→09/02													
1.0 i	04/96→08/99	215100 39 / 53	Ate		2310101	[–] 23101 17.5	solid disc	Luc		91048800	ø 180 x 32	
1.3 i	04/96→08/99	44 / 60	Ate		2310301	[–] 23103 17.5	vented disc ⊕ light alloy rim			94018500	ø 180,0 x 44	⊖ ABS
			Ate		2320001	[–] 23200 18.8	vented disc ⊖ light alloy rim					
				PRO	92075303	ø 239.5 x 12 x 43						
				PRO	92051003	ø 239.5 x 20 x 43	⊕ light alloy rim					
1.0 i	02/97→09/99	215200 38 / 52	Ate		2310101	[–] 23101 17.5	⊕ man.	Luc		91048800	ø 180 x 32	
			Ate		2310301	[–] 23103 17.5	⊕ autom.	Luc		97010200		
			Ate		82029200			Luc		84048800	bore ø 17.5 ø 180 x 32	
			Ate		82062900					94012900	ø 180,0 x 44	
				PRO	92075303	ø 239.5 x 12 x 43	⊕ man.					
				PRO	92051003	ø 239.5 x 20 x 43	⊕ autom.					
1.0 i	09/99→01/02	215300 48 / 65	Ate		2310101	[–] 23101 17.5	⊕ man. →02/00	Luc		91048800	ø 180 x 32	→02/00
			Ate		2310301	[–] 23103 17.5	⊕ autom. →02/00	Lkh		91057300	ø 203.2 x 38	02/00→ ⊕ ABS
			Ate		2320001	[–] 23200 18.8	02/00→ ⊖ ABS	Lkh		91060000	ø 180 x 32	02/00→ ⊖ ABS
			Ate		2360406	[–] 23604 18.8	02/00→ ⊕ ABS	Lkh		97009500		01/01→
			Ate		82029200			Luc		97010200		→12/00

→

FIESTA IV (JA_, JB_) 08/95→09/02

		kW / hp										
1.0 i	09/99→01/02	215300 48 / 65	Ate		82062900			Luc		84048800	bore ø 17.5 ø 180 x 32	→02/00
			PRO		92075303	ø 239.5 x 12 x 43	⊕ man. →02/00			94012900	ø 180,0 x 44	→02/00
			PRO		92051003	ø 239.5 x 20 x 43	⊕ autom. →02/00			94018500	ø 180,0 x 44	02/00→ ⊖ ABS
			PRO		92096203	ø 258 x 22 x 43.5	02/00→			94019000	ø 203,0 x 49	02/00→ ⊕ ABS
1.25 i 16V	08/95→01/02	215400 55 / 75	Ate		2310101	[–] 23101 17.5	⊕ man. →02/00	Luc		91048800	ø 180 x 32	→02/00
			Ate		2310301	[–] 23103 17.5	⊕ autom. →02/00	Lkh		91057300	ø 203.2 x 38	02/00→ ⊕ ABS
			Ate		2320001	[–] 23200 18.8	02/00→ ⊖ ABS	Lkh		91060000	ø 180 x 32	02/00→ ⊖ ABS
			Ate		2360406	[–] 23604 18.8	02/00→ ⊕ ABS	Lkh		97009500		01/01→
			Ate		82029200			Luc		97010200		→12/00
			Ate		82062900			Luc		84048800	bore ø 17.5 ø 180 x 32	→02/00
			PRO		92075303	ø 239.5 x 12 x 43	⊕ man. →02/00	Lkh		84060000	bore ø 19 ø 180 x 32	02/00→ ⊖ ABS
			PRO		92051003	ø 239.5 x 20 x 43	⊕ autom. →02/00			94012900	ø 180,0 x 44	→02/00
			PRO		92096203	ø 258 x 22 x 43.5	02/00→			94018500	ø 180,0 x 44	02/00→ ⊖ ABS
										94019000	ø 203,0 x 49	02/00→ ⊕ ABS
1.3	04/96→08/99	215500 42 / 57	Ate		2310101	[–] 23101 17.5		Luc		91048800	ø 180 x 32	
			Ate		82029200			Luc		97010200		
			Ate		82062900			Luc		84048800	bore ø 17.5 ø 180 x 32	
			PRO		92075303	ø 239.5 x 12 x 43				94012900	ø 180,0 x 44	
1.3 i	08/95→01/02	215600 37 / 50	Ate		2310101	[–] 23101 17.5	→02/00	Luc		91048800	ø 180 x 32	→02/00
1.3 i	08/95→01/02	44 / 60	Ate		2320001	[–] 23200 18.8	02/00→ ⊖ ABS	Lkh		91057300	ø 203.2 x 38	02/00→ ⊕ ABS
			Ate		2360406	[–] 23604 18.8	02/00→ ⊕ ABS	Lkh		91060000	ø 180 x 32	02/00→ ⊖ ABS
			Ate		82029200			Lkh		97009500		01/01→
			Ate		82062900			Luc		97010200		01/96→ →12/00
			PRO		92075303	ø 239.5 x 12 x 43	→02/00	Luc		84048800	bore ø 17.5 ø 180 x 32	→02/00
			PRO		92051003	ø 239.5 x 20 x 43	⊖ ABS 02/00→			94012900	ø 180,0 x 44	→02/00
			PRO		92096203	ø 258 x 22 x 43.5	⊕ ABS 02/00→			94018500	ø 180,0 x 44	02/00→ ⊖ ABS
										94019000	ø 203,0 x 49	02/00→ ⊕ ABS
1.4 i 16V	04/96→01/02	215700 66 / 90	Ate		2310301	[–] 23103 17.5	→02/00	Luc		91048800	ø 180 x 32	→02/00
1.6	02/99→09/02	72 / 98	Ate		2320001	[–] 23200 18.8	02/00→	Lkh		91057300	ø 203.2 x 38	02/00→ ⊕ ABS
			Ate		2360406	[–] 23604 18.8	02/00→ ⊕ ABS	Lkh		91060000	ø 180 x 32	02/00→ ⊖ ABS
			Ate		82029200			Lkh		97009500		01/01→
			Ate		82062900			Luc		97010200		→12/00
			PRO		92051003	ø 239.5 x 20 x 43	→02/00	Luc		84048800	bore ø 17.5 ø 180 x 32	→02/00
			PRO		92096203	ø 258 x 22 x 43.5	02/00→	Lkh		84060000	bore ø 19 ø 180 x 32	02/00→ ⊖ ABS
										94012900	ø 180,0 x 44	→02/00
										94018500	ø 180,0 x 44	02/00→ ⊖ ABS
										94019000	ø 203,0 x 49	02/00→ ⊕ ABS
1.6	02/00→01/02	215800 65 / 88	Ate		2320001	[–] 23200 18.8	⊖ ABS	Lkh		91057300	ø 203.2 x 38	⊕ ABS
1.6 16V Sport	02/00→01/02	76 / 103										
1.8 DI	04/00→01/02	55 / 75	Ate		2360406	[–] 23604 18.8	⊕ ABS	Lkh		91060000	ø 180 x 32	⊖ ABS
			Ate		82029200			Lkh		97009500		01/01→

		kW / hp									
FIESTA IV (JA_, JB_) 08/95→09/02											
		215800	Ate		**82062900**			Luc		**97010200**	→12/00
1.6	02/00→01/02	65 / 88									
1.6 16V Sport	02/00→01/02	76 / 103									
1.8 DI	04/00→01/02	55 / 75		PRO	**92051003**	ø 239.5 x 20 x 43	⊖ ABS			**94018500**	ø 180,0 x 44	⊖ ABS
				PRO	**92096203**	ø 258 x 22 x 43.5	⊕ ABS			**94019000**	ø 203,0 x 49	⊕ ABS
		215900	Ate		**2310101**	[–] 23101 17.5	→02/00	Luc		**91048800**	ø 180 x 32	
1.8 D	08/95→04/00	44 / 60	Ate		**2320001**	[–] 23200 18.8	02/00→ ⊖ ABS	Luc		**97010200**		01/96→
			Ate		**2360406**	[–] 23604 18.8	02/00→ ⊕ ABS	Luc		**84048800**	bore ø 17.5 ø 180 x 32	
			Ate		**82029200**					**94012900**	ø 180,0 x 44	
			Ate		**82062900**							
				PRO	**92075303**	ø 239.5 x 12 x 43	→02/00					
				PRO	**92051003**	ø 239.5 x 20 x 43	→02/00					
				PRO	**92096203**	ø 258 x 22 x 43.5	02/00→					
FIESTA V (JH_, JD_) 11/01→03/10											
		216000	Ate		**2360406**	[–] 23604 18.8		Lkh		**91057300**	ø 203.2 x 38	
1.0	05/02→03/08	49 / 67										
1.25 16V	05/02→06/08	55 / 75										
1.25 16V	03/03→06/08	51 / 70	Ate		**82029200**			Lkh		**97015500**		
1.3	11/01→06/08	44 / 60										
1.3	11/01→06/08	51 / 69	Ate		**82062900**			Lkh		**84057301**	bore ø 19 ø 203.2 x 38	
1.3	01/02→12/04	55 / 75										
1.4 16V	11/01→06/08	59 / 80		PRO	**92096203**	ø 258 x 22 x 43.5				**94026700**	ø 203,0 x 44.5	
1.4 TDCi	11/01→06/08	50 / 68										
1.6	05/02→06/08	72 / 98										
1.6	02/03→12/04	78 / 106										
1.6 16V	11/01→12/04	70 / 95										
1.6 16V	11/01→06/08	74 / 100										
1.6 Flex	09/04→03/10	82 / 112										
1.6 TDCi	11/04→06/08	66 / 90										
		216100	Luc		**2428302**	[–] 24283 17.6						
1.0 Flex	09/06→03/10	54 / 73		PRO	**92176003**	ø 258 x 23 x 44						
		216200	Ate		**2344007**	[–] 23440 17.1		Luc		**2335301**	[–] 23353 14	
ST150	03/05→06/08	110 / 150	Ate		**82029200**			Luc		**82062800**		
			Ate		**82062900**				PRO	**92088403**	ø 253 x 10.3 x 33.2	
				PRO	**92159003**	ø 278 x 25 x 45						
FIESTA VI 06/08→											
		216300	Luc		**2428302**	[–] 24283 17.6						
1.0	04/10→	51 / 69										
1.0 Flex	04/10→	54 / 73		PRO	**92176003**	ø 258 x 23 x 44	→11/12					
		216400	TRW		**2513402**	[–] 25134 16.7	⊕ rear disc brake			**97038600**		⊕ rear drum brake
1.0	10/12→	59 / 80										
1.0	01/13→	48 / 65	Luc		**2428302**	[–] 24283 17.6	⊕ rear drum brake					
1.0 EcoBoost	09/12→	92 / 125										
1.0 EcoBoost	01/13→	74 / 101										
1.5 TDCi	09/12→	55 / 75		PRO	**92176003**	ø 258 x 23 x 44	⊕ rear drum brake					
1.6 ST	03/13→	134 / 182										
1.6 Ti	09/12→	77 / 105		PRO	**92252403**	ø 278 x 23 x 43.9	⊕ rear disc brake					
		216500	Luc		**2428302**	[–] 24283 17.6				**91069200**	ø 200 x 32	
1.0 Flex	04/10→	51 / 69										
1.25	06/08→	44 / 60	Luc		**82512900**					**97038600**		
1.25	06/08→	60 / 82										
1.4	06/08→	71 / 97										
1.4 LPG	01/09→	71 / 97		PRO	**92176003**	ø 258 x 23 x 44		Luc		**84069200**	bore ø 19 ø 200 x 32	
1.4 TDCi	01/09→	50 / 68										
1.4 TDCi	07/10→	51 / 70										
1.5	09/11→	81 / 110										
1.6	06/08→	70 / 95										
1.6	04/10→	72 / 98										
1.6 Flex	04/10→	74 / 101										
1.6 TDCi	06/08→	55 / 75										
1.6 TDCi	06/08→	66 / 90										
1.6 TDCi	02/10→	70 / 95										
1.6 Ti	06/08→	88 / 120										
1.6 Ti	12/10→	99 / 134										
		216600	Luc		**2428302**	[–] 24283 17.6	→2014-07			**97038600**		⊕ rear drum brake
1.0 Sport	05/14→	103 / 140										
1.6 ST	06/13→	145 / 197		PRO	**92176003**	ø 258 x 23 x 44						
		216700	Luc		**2428302**	[–] 24283 17.6				**97038600**		⊕ rear drum brake
1.4 LPG	01/09→	68 / 92										

→

		kW / hp											
FIESTA VI 06/08→													
1.6 Flex	06/10→	85 / 116		PRO	92176003	ø 258 x 23 x 44							
		216800	TRW		2513402	[–] 25134 16.7	Ø 300 mm →2014-06			97038600			⊕ rear drum brake
1.5 Flex	05/13→	82 / 112											
1.6 Flex	05/13→	96 / 130	Luc		2428302	[–] 24283 17.6	Ø 258 mm →2014-06						
				PRO	92176003	ø 258 x 23 x 44	⊕ rear drum brake						
				PRO	92252403	ø 278 x 23 x 43.9	⊕ rear disc brake						
FIESTA Box (J5_, J3_) 02/96→10/99													
		216900	Ate		2310301	[–] 23103 17.5	→02/00 vented disc	Luc		91048900	ø 203.2 x 38		
1.3	02/96→	44 / 60	Ate		2320001	[–] 23200 18.8	02/00→ ⊖ ABS	Luc		91051500	ø 203.2 x 38		→02/00
			Ate		2360406	[–] 23604 18.8	02/00→ ⊕ ABS			84048900	bore ø 22.2 ø 203.2 x 38		
			Ate		2120203	[–] 21202 17.8	→02/00 solid disc			94019100	ø 203,0 x 45		
			Ate		82029200					94012900	ø 180,0 x 44		→02/00
			Ate		82062900								
				PRO	92075303	ø 239.5 x 12 x 43	→02/00						
				PRO	92051003	ø 239.5 x 20 x 43	→02/00						
				PRO	92096203	ø 258 x 22 x 43.5	02/00→						
		217000	Ate		2310301	[–] 23103 17.5	vented disc	Luc		91048900	ø 203.2 x 38		
1.4 i	04/96→10/99	66 / 90	Ate		2120203	[–] 21202 17.8	solid disc	Luc		91051500	ø 203.2 x 38		⊕ ABS
			Ate		82029200					84048900	bore ø 22.2 ø 203.2 x 38		
			Ate		82062900					94019100	ø 203,0 x 45		
				PRO	92075303	ø 239.5 x 12 x 43							
				PRO	92051003	ø 239.5 x 20 x 43							
		217100	Ate		2310301	[–] 23103 17.5	→02/00 vented disc	Luc		91048900	ø 203.2 x 38		
1.8 D	02/96→	44 / 60	Ate		2320001	[–] 23200 18.8	02/00→ ⊖ ABS	Luc		91051500	ø 203.2 x 38		⊕ ABS
			Ate		2360406	[–] 23604 18.8	02/00→ ⊕ ABS			84048900	bore ø 22.2 ø 203.2 x 38		
			Ate		2120203	[–] 21202 17.8	→02/00 solid disc			94019100	ø 203,0 x 45		
			Ate		82029200								
			Ate		82062900								
				PRO	92075303	ø 239.5 x 12 x 43	→02/00						
				PRO	92051003	ø 239.5 x 20 x 43	→02/00						
				PRO	92096203	ø 258 x 22 x 43.5	02/00→						
		217200	Ate		2320001	[–] 23200 18.8	⊖ ABS	Luc		91048900	ø 203.2 x 38		
1.8 DI	09/00→	55 / 75	Ate		2360406	[–] 23604 18.8	⊕ ABS	Luc		91051500	ø 203.2 x 38		⊕ ABS
			Ate		82029200					94019100	ø 203,0 x 45		
			Ate		82062900								
				PRO	92096203	ø 258 x 22 x 43.5							
FIESTA Box (JV_) 05/98→													
		217300	Ate		2310301	[–] 23103 17.5	→02/00	Luc		91048900	ø 203.2 x 38		
D 1.8	05/98→	44 / 60	Ate		2320001	[–] 23200 18.8	03/00→ ⊖ ABS	Luc		97009100			
			Ate		2360406	[–] 23604 18.8	03/00→ ⊕ ABS			94019100	ø 203,0 x 45		
			Ate		82029200								
			Ate		82062900								

F - H

kW / hp											
FIESTA Box (JV_) 05/98→											
217300											
D 1.8 05/98→ 44 / 60		PRO	92075303	ø 239.5 x 12 x 43	→02/00						
		PRO	92051003	ø 239.5 x 20 x 43	03/00→ ⊖ ABS						
		PRO	92096203	ø 258 x 22 x 43.5	03/00→ ⊕ ABS						
217400	Ate		2320001	[–] 23200 18.8	⊖ ABS	Luc		91048900	ø 203.2 x 38		
TD 1.8 03/00→ 55 / 75	Ate		2360406	[–] 23604 18.8	⊕ ABS	Luc		97009100			
	Ate		82029200					94019100	ø 203,0 x 45		
	Ate		82062900								
		PRO	92051003	ø 239.5 x 20 x 43	⊖ ABS						
		PRO	92096203	ø 258 x 22 x 43.5	⊕ ABS						
FIESTA Kasten (J5_, J3_) 02/96→10/99 → FIESTA Box (J5_, J3_), Page 381											
FIESTA Kasten (JV_) 05/98→ → FIESTA Box (JV_), Page 381											
FIESTA Mk IV (JA_, JB_) 08/95→09/02 → FIESTA IV (JA_, JB_), Page 378											
FIESTA Saloon 04/10→12/11											
217500	Luc		2428302	[–] 24283 17.6	→2014-07			97038600		⊕ rear drum brake	
1.0 EcoBoost 09/13→ 93 / 126											
1.0 Flex 04/10→ 51 / 69											
1.25 10/12→ 44 / 60		PRO	92176003	ø 258 x 23 x 44							
1.4 10/10→ 70 / 95											
1.6 04/10→ 72 / 98											
1.6 10/10→ 89 / 121											
1.6 Flex 04/10→ 74 / 101											
1.6 Flex 06/10→ 85 / 116											
1.6 Flex 09/10→ 81 / 110											
1.6 TDCi 10/10→ 66 / 90											
217600	Luc		2428302	[–] 24283 17.6				97038600			
1.6 Ti 04/10→12/11 88 / 120		PRO	92176003	ø 258 x 23 x 44							
FIESTA Stufenheck 04/10→12/11 → FIESTA Saloon, Page 382											
FIESTA Van 10/03→											
217700	Ate		2360406	[–] 23604 18.8		Lkh		91057300	ø 203.2 x 38		
1.3 10/03→ 51 / 69											
1.4 TDCi 10/03→ 50 / 68	Ate		82029200			Lkh		97015500			
	Ate		82062900			Lkh		84057300	bore ø 19 ø 203.2 x 38		
		PRO	92096203	ø 258 x 22 x 43.5				94026700	ø 203,0 x 44.5		
FIESTA Van 01/09→											
217800	Luc		2428302	[–] 24283 17.6				91069200	ø 200 x 32		
1.25 01/09→ 60 / 82											
1.4 TDCi 01/09→ 50 / 68	Luc		82512900					97038600			
1.4 TDCi 07/10→ 51 / 70											
1.6 TDCi 01/09→ 66 / 90		PRO	92176003	ø 258 x 23 x 44		Luc		84069200	bore ø 19 ø 200 x 32		
1.6 TDCi 02/10→ 70 / 95											
217900	TRW		2513402	[–] 25134 16.7	⊕ rear disc brake			97038600		⊕ rear drum brake	
1.5 TDCi 10/12→ 55 / 75	Luc		2428302	[–] 24283 17.6	⊕ rear drum brake						
		PRO	92176003	ø 258 x 23 x 44	⊕ rear drum brake						
		PRO	92252403	ø 278 x 23 x 43.9	⊕ rear disc brake						
218000	TRW		2513402	[–] 25134 16.7	Ø 300 mm →2014-06			97038600		⊕ rear drum brake	
1.6 Flex 05/13→ 96 / 130	Luc		2428302	[–] 24283 17.6	Ø 258 mm →2014-06						
		PRO	92176003	ø 258 x 23 x 44	⊕ rear drum brake						
		PRO	92252403	ø 278 x 23 x 43.9	⊕ rear disc brake						
FOCUS (DAW, DBW) 10/98→11/04											
218100	Ate		2315402	[–] 23154 19.3		Luc		2335301	[–] 23353 14	⊕ rear disc brake	
1.4 16V 10/98→11/04 55 / 75											
1.6 16V 10/98→11/04 74 / 100	Ate		82062900			Luc		82062800			
1.6 16V Flexifuel 01/02→11/04 75 / 102											
1.8 16V 10/98→11/04 85 / 115		PRO	92096203	ø 258 x 22 x 43.5				91052500	ø 203.2 x 38	⊕ rear drum brake	
2.0 16V 10/98→11/04 96 / 131						Luc		97014000			

→

		kW / hp											
FOCUS (DAW, DBW) 10/98→11/04													
		218100											
1.4 16V	10/98→11/04	55 / 75								84052500	bore ø 20.6 ø 203.2 x 38	⊕ rear drum brake	
1.6 16V	10/98→11/04	74 / 100							PRO	92088403	ø 253 x 10.3 x 33.2	⊕ rear disc brake	
1.6 16V Flexifuel	01/02→11/04	75 / 102								94022500	ø 203,0 x 44	⊕ rear drum brake	
1.8 16V	10/98→11/04	85 / 115											
2.0 16V	10/98→11/04	96 / 131											
		218200	Ate		2315402	[–] 23154 19.3		Luc		2335301	[–] 23353 14	⊕ rear disc brake	
1.8 DI / TDDi	08/99→11/04	55 / 75											
1.8 Turbo DI / TDDi	10/98→11/04	66 / 90	Ate		82062900			Luc		82062800			
				PRO	92096203	ø 258 x 22 x 43.5				91052500	ø 203.2 x 38	⊕ rear drum brake	
								Luc		97014000			
										84052502	bore ø 19 ø 203.2 x 39	⊕ rear drum brake	
									PRO	92088403	ø 253 x 10.3 x 33.2	⊕ rear disc brake	
										94022500	ø 203,0 x 44	⊕ rear drum brake	
		218300	Ate		2315402	[–] 23154 19.3		Luc		2335301	[–] 23353 14	⊕ rear disc brake	
1.8 TDCi	03/01→11/04	85 / 115											
1.8 TDCi	08/02→11/04	74 / 100	Ate		82062900			Luc		82062800			
				PRO	92096203	ø 258 x 22 x 43.5				91052500	ø 203.2 x 38	⊕ rear drum brake	
								Luc		97014000			
									PRO	92088403	ø 253 x 10.3 x 33.2	⊕ rear disc brake	
										94022500	ø 203,0 x 44	⊕ rear drum brake	
		218400	Ate		2344004	[–] 23440 17.6	Teves	Luc		2335301	[–] 23353 14		
RS	10/02→11/04	158 / 215	Ate		82032100		Teves	Luc		82062800			
			Ate		82062900								
					92146400	ø 324 x 28 x 52.7							
		218500	Ate		2344004	[–] 23440 17.6		Luc		2335301	[–] 23353 14		
ST170	03/02→11/04	127 / 173	Ate		82032100			Luc		82062800			
			Ate		82062900				PRO	92172403	ø 280 x 10 x 33		
				PRO	92139903	ø 300 x 24 x 44.5							
FOCUS II (DA_) 11/04→03/10													
		218600	Ate		2372301	[–] 23723 18.2		Ate		2413701	[–] 24137 16.7	⊕ rear disc brake	
1.4	11/04→	59 / 80											
1.6	11/04→	74 / 100	Ate	epad	2372381	[–] 23723 18.2		Ate	epad	2413781	[–] 24137 16.7	⊕ rear disc brake	
1.6	01/10→	81 / 110											
1.6 Flex	04/07→11/09	77 / 105											
1.6 Flex	01/10→	83 / 113	Ate		82032000			Ate		82062900			
1.6 LPG	10/09→	85 / 115											
1.6 TDCi	11/04→	74 / 100	Ate		82062900			Ate		82503500			
1.6 TDCi	11/04→	80 / 109											
1.6 TDCi	01/05→	66 / 90											
1.6 Ti	11/04→	85 / 115		PRO	92141203	ø 278 x 25 x 48.5				91064900	ø 228.6 x 42	⊕ rear drum brake	
1.8	03/06→	92 / 125						Lkh		97030900		⊕ rear drum brake	
1.8 Flexifuel	12/05→	96 / 131							PRO	92133703	ø 265 x 11 x 40.8		
1.8 Flexifuel	01/06→	92 / 125								94027400	ø 228,3 x 51	⊕ rear drum brake	
		218700	Ate		2372301	[–] 23723 18.2		Ate		2413701	[–] 24137 16.7	⊕ rear disc brake	
1.6 Flex	01/10→	85 / 116											
			Ate	epad	2372381	[–] 23723 18.2		Ate	epad	2413781	[–] 24137 16.7	⊕ rear disc brake	
			Ate		82032000			Ate		82503500			
				PRO	92141203	ø 278 x 25 x 48.5				91064900	ø 228.6 x 42	⊕ rear drum brake	
								Lkh		97030900		⊕ rear drum brake	
									PRO	92133703	ø 265 x 11 x 40.8		
										94027400	ø 228,3 x 51	⊕ rear drum brake	

F - H

FOCUS II (DA_) 11/04→03/10

		kW / hp												
		218800	Ate		2372301	[–] 23723 18.2		Ate		2413701	[–] 24137 16.7	⊕ rear disc brake
1.8 TDCi	01/05→	85 / 115										
2.0	11/04→	107 / 145	Ate	epad	2372381	[–] 23723 18.2		Ate	epad	2413781	[–] 24137 16.7	⊕ rear disc brake
2.0	04/10→	105 / 143										
2.0 CNG	04/09→	107 / 145										
2.0 LPG	06/08→	107 / 145	Ate		82032000			Ate		82062900		
2.0 TDCi	11/04→	98 / 133										
2.0 TDCi	11/04→	100 / 136	Ate		82062900			Ate		82503500		
2.0 TDCi	02/08→	81 / 110										
				PRO	92141303	ø 300 x 25 x 48.5				91064900	ø 228.6 x 42	⊕ rear drum brake
								Lkh		97030900		⊕ rear drum brake
									PRO	92133803	ø 280 x 10.9 x 40.8	
										94027400	ø 228,3 x 51	⊕ rear drum brake
		218900	Ate		2372301	[–] 23723 18.2		Ate		2413701	[–] 24137 16.7	⊕ rear disc brake
2.0	06/05→09/08	104 / 140										
2.0 Flex	10/08→03/10	107 / 145	Ate	epad	2372381	[–] 23723 18.2		Ate	epad	2413781	[–] 24137 16.7	⊕ rear disc brake
			Ate		82032000			Ate		82503500		⊕ rear disc brake
				PRO	92141303	ø 300 x 25 x 48.5				91064900	ø 228.6 x 42	⊕ rear drum brake
								Lkh		97030900		⊕ rear drum brake
									PRO	92133803	ø 280 x 10.9 x 40.8	⊕ rear disc brake
										94027400	ø 228,3 x 51	⊕ rear drum brake
		219000	Ate		2372301	[–] 23723 18.2		Ate		2413701	[–] 24137 16.7	⊕ rear disc brake
2.0 Flex	04/10→	109 / 148										
			Ate	epad	2372381	[–] 23723 18.2		Ate	epad	2413781	[–] 24137 16.7	⊕ rear disc brake
			Ate		82032000			Ate		82062900		⊕ rear disc brake
			Ate		82062900			Ate		82503500		⊕ rear disc brake
				PRO	92141303	ø 300 x 25 x 48.5				91064900	ø 228.6 x 42	⊕ rear drum brake
								Lkh		97030900		⊕ rear drum brake
									PRO	92133803	ø 280 x 10.9 x 40.8	⊕ rear disc brake
										94027400	ø 228,3 x 51	⊕ rear drum brake
		219100	Luc		2474302	[+] 24743 18.7		TRW		2453703	[–] 24537 15.7	
2.5 RS	01/09→	224 / 305						Luc		82073200		
										92159300	ø 302 x 11 x 50.8	
									PRO	92159303	ø 302 x 11 x 50.8	
		219200	TRW		2440901	[–] 24409 18		TRW		2453703	[–] 24537 15.7	
2.5 RS 500	05/10→	257 / 350						Luc		82073200		
										92159300	ø 302 x 11 x 50.8	
									PRO	92159303	ø 302 x 11 x 50.8	
		219300	Ate		2391201	[–] 23912 18.5		Ate		2413701	[–] 24137 16.7	
2.5 ST	10/05→	166 / 225	Ate		82071800			Ate	epad	2413781	[–] 24137 16.7	
					92149100	ø 320 x 25 x 48.5		Ate		82062900		
				PRO	92149103	ø 320 x 25 x 48.5		Ate		82503500		
				PRO	92262203	ø 320 x 25 x 48.4	⊕ ST		PRO	92133803	ø 280 x 10.9 x 40.8	⊕ ST

FOCUS II Cabriolet 10/06→ → FOCUS II Convertible, Page 384

FOCUS II Convertible 10/06→

		219400	Ate		2372301	[–] 23723 18.2		Ate		2413701	[–] 24137 16.7	
1.6	10/06→	74 / 100										
			Ate	epad	2372381	[–] 23723 18.2		Ate	epad	2413781	[–] 24137 16.7	

→

		kW / hp											
FOCUS II Convertible 10/06→													
		219400	Ate		82032000				Ate		82062900		
1.6	10/06→	74 / 100	Ate		82062900				Ate		82503500		
				PRO	92141203	ø 278 x 25 x 48.5				PRO	92133703	ø 265 x 11 x 40.8	
		219500	Ate		2372301	[–] 23723 18.2			Ate		2413701	[–] 24137 16.7	
2.0	10/06→	107 / 145											
2.0 TDCi	10/06→	100 / 136	Ate	epad	2372381	[–] 23723 18.2			Ate	epad	2413781	[–] 24137 16.7	
			Ate		82032000				Ate		82062900		
			Ate		82062900				Ate		82503500		
				PRO	92141303	ø 300 x 25 x 48.5				PRO	92133803	ø 280 x 10.9 x 40.8	
FOCUS II Estate (DA_) 11/04→													
		219600	Ate		2372301	[–] 23723 18.2			Ate		2413701	[–] 24137 16.7	⊕ rear disc brake
1.4	11/04→	59 / 80											
1.6	11/04→	74 / 100											
1.6 Ti	11/04→	85 / 115	Ate	epad	2372381	[–] 23723 18.2			Ate	epad	2413781	[–] 24137 16.7	⊕ rear disc brake
			Ate		82032000				Ate		82062900		
			Ate		82062900				Ate		82503500		
				PRO	92141203	ø 278 x 25 x 48.5					91064900	ø 228.6 x 42	⊕ rear drum brake
									Lkh		97030900		⊕ rear drum brake
											84064900	bore ø 20.6 ø 228.6 x 42	⊕ rear drum brake
										PRO	92133703	ø 265 x 11 x 40.8	
											94027400	ø 228,3 x 51	⊕ rear drum brake
		219700	Ate		2372301	[–] 23723 18.2			Ate		2413701	[–] 24137 16.7	⊕ rear disc brake
1.6 LPG	10/09→	85 / 115											
1.8	03/06→	92 / 125											
1.8 Flexifuel	12/05→	97 / 132	Ate	epad	2372381	[–] 23723 18.2			Ate	epad	2413781	[–] 24137 16.7	⊕ rear disc brake
1.8 Flexifuel	01/06→	92 / 125											
			Ate		82032000				Ate		82062900		
			Ate		82062900				Ate		82503500		
				PRO	92141203	ø 278 x 25 x 48.5					91064900	ø 228.6 x 42	⊕ rear drum brake
									Lkh		97030900		⊕ rear drum brake
										PRO	92133703	ø 265 x 11 x 40.8	
											94027400	ø 228,3 x 51	⊕ rear drum brake
		219800	Ate		2372301	[–] 23723 18.2			Ate		2413701	[–] 24137 16.7	⊕ rear disc brake
1.6 TDCi	11/04→	66 / 90											
1.6 TDCi	11/04→	80 / 109											
1.6 TDCi	12/07→	81 / 110	Ate	epad	2372381	[–] 23723 18.2			Ate	epad	2413781	[–] 24137 16.7	⊕ rear disc brake
			Ate		82032000				Ate		82062900		
			Ate		82062900				Ate		82503500		
				PRO	92141203	ø 278 x 25 x 48.5					91064900	ø 228.6 x 42	⊕ rear drum brake
									Lkh		97030900		⊕ rear drum brake
											84064900	bore ø 20.6 ø 228.6 x 42	⊕ rear drum brake
										PRO	92133703	ø 265 x 11 x 40.8	
										PRO	92133803	ø 280 x 10.9 x 40.8	
											94027400	ø 228,3 x 51	⊕ rear drum brake
		219900	Ate		2372301	[–] 23723 18.2			Ate		2413701	[–] 24137 16.7	⊕ rear disc brake
1.6 TDCi	11/04→	74 / 100											
			Ate	epad	2372381	[–] 23723 18.2			Ate	epad	2413781	[–] 24137 16.7	⊕ rear disc brake
			Ate		82032000				Ate		82062900		
			Ate		82062900				Ate		82503500		

		kW / hp										
FOCUS II Estate (DA_) 11/04→												
		219900		PRO	**92141203**	ø 278 x 25 x 48.5			**91064900**	ø 228.6 x 42	⊕ rear drum brake
1.6 TDCi	11/04→	74 / 100						Lkh	**97030900**		⊕ rear drum brake
								PRO	**92133703**	ø 265 x 11 x 40.8	
								PRO	**92133803**	ø 280 x 10.9 x 40.8	
									94027400	ø 228,3 x 51	⊕ rear drum brake
		220000	Ate		**2372301**	[–] 23723 18.2		Ate	**2413701**	[–] 24137 16.7	⊕ rear disc brake
1.8 TDCi	11/04→	85 / 115									
2.0 LPG	06/08→	107 / 145	Ate	epad	**2372381**	[–] 23723 18.2		Ate	**2413781**	[–] 24137 16.7	⊕ rear disc brake
2.0 TDCi	11/04→	98 / 133									
			Ate		**82032000**			Ate	**82062900**		
			Ate		**82062900**			Ate	**82503500**		
				PRO	**92141303**	ø 300 x 25 x 48.5			**91064900**	ø 228.6 x 42	⊕ rear drum brake
								Lkh	**97030900**		⊕ rear drum brake
								PRO	**92133803**	ø 280 x 10.9 x 40.8	
									94027400	ø 228,3 x 51	⊕ rear drum brake
		220100	Ate		**2372301**	[–] 23723 18.2		Ate	**2413701**	[–] 24137 16.7	⊕ rear disc brake
2.0	11/04→	107 / 145									
2.0 TDCi	11/04→	100 / 136	Ate	epad	**2372381**	[–] 23723 18.2		Ate	**2413781**	[–] 24137 16.7	⊕ rear disc brake
2.0 TDCi	02/08→	81 / 110									
			Ate		**82032000**			Ate	**82062900**		
			Ate		**82062900**			Ate	**82503500**		
				PRO	**92141303**	ø 300 x 25 x 48.5			**91064900**	ø 228.6 x 42	⊕ rear drum brake
								Lkh	**97030900**		⊕ rear drum brake
									84064900	bore ø 20.6 ø 228.6 x 42	⊕ rear drum brake
								PRO	**92133803**	ø 280 x 10.9 x 40.8	
									94027400	ø 228,3 x 51	⊕ rear drum brake
FOCUS II Kombi (DA_) 11/04→ → FOCUS II Estate (DA_), Page 385												
FOCUS II Saloon (DA_) 04/05→12/10												
		220200	Ate		**2372301**	[–] 23723 18.2		Ate	**2413701**	[–] 24137 16.7	⊕ rear disc brake
1.4	04/05→	59 / 80									
1.6	04/05→	74 / 100	Ate	epad	**2372381**	[–] 23723 18.2		Ate	**2413781**	[–] 24137 16.7	⊕ rear disc brake
1.6	04/05→09/07	76 / 103									
1.6	01/10→	81 / 110	Ate		**82032000**			Ate	**82062900**		
1.6 Flex	04/07→11/09	77 / 105									
1.6 Flex	01/10→	83 / 113	Ate		**82062900**			Ate	**82503500**		
1.6 TDCi	04/05→	66 / 90									
1.6 TDCi	04/05→	74 / 100		PRO	**92141203**	ø 278 x 25 x 48.5			**91064900**	ø 228.6 x 42	⊕ rear drum brake
1.6 TDCi	04/05→	80 / 109									
1.6 Ti	04/05→	85 / 115						Lkh	**97030900**		⊕ rear drum brake
1.8	03/06→	92 / 125									
1.8 Flexifuel	12/05→	96 / 131						PRO	**92133703**	ø 265 x 11 x 40.8	
1.8 Flexifuel	06/06→	92 / 125									
									94027400	ø 228,3 x 51	⊕ rear drum brake
		220300	Ate		**2372301**	[–] 23723 18.2		Ate	**2413701**	[–] 24137 16.7	⊕ rear disc brake
1.6 Flex	01/10→	85 / 116									
			Ate	epad	**2372381**	[–] 23723 18.2		Ate	**2413781**	[–] 24137 16.7	⊕ rear disc brake
			Ate		**82032000**			Ate	**82062900**		⊕ rear disc brake
			Ate		**82062900**			Ate	**82503500**		⊕ rear disc brake
				PRO	**92141203**	ø 278 x 25 x 48.5			**91064900**	ø 228.6 x 42	⊕ rear drum brake
								Lkh	**97030900**		⊕ rear drum brake
								PRO	**92133703**	ø 265 x 11 x 40.8	⊕ rear disc brake
									94027400	ø 228,3 x 51	⊕ rear drum brake

→

		kW / hp												
FOCUS II Saloon (DA_) 04/05→12/10														
		220400	Ate		2372301	[–] 23723	18.2		Ate		2413701	[–] 24137	16.7	⊕ rear disc brake
1.8 TDCi	04/05→	85 / 115	Ate	epad	2372381	[–] 23723	18.2		Ate	epad	2413781	[–] 24137	16.7	⊕ rear disc brake
2.0	04/05→	107 / 145	Ate		82032000				Ate		82062900			
2.0	10/07→	103 / 140	Ate		82062900				Ate		82503500			
2.0	02/08→	104 / 141		PRO	92141303	ø 300 x 25 x 48.5					91064900	ø 228.6 x 42		⊕ rear drum brake
2.0	04/10→	105 / 145							Lkh		97030900			⊕ rear drum brake
2.0 TDCi	04/05→	100 / 136								PRO	92133803	ø 280 x 10.9 x 40.8		
2.0 TDCi	02/08→	81 / 110									94027400	ø 228,3 x 51		⊕ rear drum brake
		220500	Ate		2372301	[–] 23723	18.2		Ate		2413701	[–] 24137	16.7	⊕ rear disc brake
2.0	09/09→12/10	104 / 140	Ate	epad	2372381	[–] 23723	18.2		Ate	epad	2413781	[–] 24137	16.7	⊕ rear disc brake
			Ate		82032000				Ate		82503500			⊕ rear disc brake
				PRO	92141303	ø 300 x 25 x 48.5				PRO	92133803	ø 280 x 10.9 x 40.8		⊕ rear disc brake
											94027400	ø 228,3 x 51		⊕ rear drum brake
		220600	Ate		2372301	[–] 23723	18.2		Ate		2413701	[–] 24137	16.7	⊕ rear disc brake
2.0 Flex	04/10→	109 / 148	Ate	epad	2372381	[–] 23723	18.2		Ate	epad	2413781	[–] 24137	16.7	⊕ rear disc brake
			Ate		82032000				Ate		82062900			⊕ rear disc brake
			Ate		82062900				Ate		82503500			⊕ rear disc brake
				PRO	92141303	ø 300 x 25 x 48.5					91064900	ø 228.6 x 42		⊕ rear drum brake
									Lkh		97030900			⊕ rear drum brake
										PRO	92133803	ø 280 x 10.9 x 40.8		⊕ rear disc brake
											94027400	ø 228,3 x 51		⊕ rear drum brake
FOCUS II Station Wagon (DA_) 11/04→ → FOCUS II Estate (DA_), Page 385														
FOCUS II Stufenheck (DA_) 04/05→12/10 → FOCUS II Saloon (DA_), Page 386														
FOCUS III 04/11→														
		220700	Ate		2372301	[–] 23723	18.2		Ate		2521201	[–] 25212	16.1	⊕ rear disc brake
1.0 EcoBoost	02/12→	74 / 100	Ate	epad	2372381	[–] 23723	18.2		Ate	epad	2521281	[–] 25212	16.1	⊕ rear disc brake
1.0 EcoBoost	02/12→	92 / 125	Ate		82032000				Ate		82503500			⊕ rear disc brake
			Ate		82062900						91079800	ø 228.6 x 42		⊕ rear drum brake
				PRO	92237703	ø 278 x 25 x 48.6				PRO	92239003	ø 270.9 x 11 x 40.8		⊕ rear disc brake
		220800	Ate		2372301	[–] 23723	18.2		Ate		2521201	[–] 25212	16.1	⊕ rear disc brake
1.5 EcoBoost	09/14→	110 / 150	Ate	epad	2372381	[–] 23723	18.2		Ate	epad	2521281	[–] 25212	16.1	⊕ rear disc brake
1.5 EcoBoost	09/14→	134 / 182		PRO	92141303	ø 300 x 25 x 48.5			Ate		82503500			⊕ rear disc brake
1.5 TDCi	09/14→	70 / 95								PRO	92239003	ø 270.9 x 11 x 40.8		⊕ rear disc brake
1.5 TDCi	09/14→	88 / 120												
1.5 TDCi ECOnetic	09/14→	77 / 105												
1.6 Flexifuel	07/13→	110 / 150												
2.0 ST	09/13→	186 / 253												
		220900	Ate		2372301	[–] 23723	18.2		Ate		82503500			⊕ rear disc brake
1.6	10/13→	96 / 131	Ate	epad	2372381	[–] 23723	18.2				91079800	ø 228.6 x 42		⊕ rear drum brake
1.6 Flex	10/13→	99 / 135	Ate		82032000					PRO	92239003	ø 270.9 x 11 x 40.8		⊕ rear disc brake
2.0	10/13→	129 / 175		PRO	92141303	ø 300 x 25 x 48.5								
2.0 Direct Flex	10/13→	131 / 178												
		221000	Ate		2372301	[–] 23723	18.2		Ate		2521201	[–] 25212	16.1	⊕ rear disc brake
1.6 EcoBoost	04/11→	110 / 150	Ate	epad	2372381	[–] 23723	18.2		Ate	epad	2521281	[–] 25212	16.1	⊕ rear disc brake
1.6 EcoBoost	04/11→	134 / 182	Ate		82032000				Ate		82062900			⊕ rear disc brake
			Ate		82062900				Ate		82503500			⊕ rear disc brake

FOCUS III 04/11→

		kW / hp											
221000													
1.6 EcoBoost	04/11→	110 / 150		PRO	92141303	ø 300 x 25 x 48.5				91079800	ø 228.6 x 42	⊕ rear drum brake
1.6 EcoBoost	04/11→	134 / 182							PRO	92239003	ø 270.9 x 11 x 40.8	⊕ rear disc brake
221100			Ate		2372301	[–] 23723 18.2		Ate		2521201	[–] 25212 16.1	⊕ rear disc brake
1.6 Flexifuel	04/11→	88 / 120										
1.6 LPG	02/12→	88 / 120	Ate	epad	2372381	[–] 23723 18.2		Ate	epad	2521281	[–] 25212 16.1	⊕ rear disc brake
1.6 TDCi	04/11→	70 / 95										
1.6 TDCi	04/11→	85 / 115	Ate		82032000			Ate		82062900		⊕ rear disc brake
1.6 TDCi ECOnetic	05/12→	77 / 105										
1.6 Ti	04/11→	77 / 105	Ate		82062900			Ate		82503500		⊕ rear disc brake
1.6 Ti	04/11→	92 / 125										
1.6 Ti	08/11→	63 / 85		PRO	92237703	ø 278 x 25 x 48.6				91079800	ø 228.6 x 42	⊕ rear drum brake
2.0 TDCi	04/11→	85 / 115							PRO	92239003	ø 270.9 x 11 x 40.8	⊕ rear disc brake
2.0 TDCi	04/11→	100 / 136										
2.0 TDCi	04/11→	103 / 140										
2.0 TDCi	04/11→	120 / 163										
2.0 Ti-GDi	08/11→	125 / 170										
221200			Ate		2372301	[–] 23723 18.2		Ate		2521201	[–] 25212 16.1	⊕ rear disc brake →02/13
2.0	09/11→	119 / 162										
			Ate	epad	2372381	[–] 23723 18.2		Ate	epad	2521281	[–] 25212 16.1	⊕ rear disc brake →02/13
			Ate		82032000			Ate		82503500		⊕ rear disc brake
				PRO	92141303	ø 300 x 25 x 48.5				91079800	ø 228.6 x 42	⊕ rear drum brake
									PRO	92239003	ø 270.9 x 11 x 40.8	⊕ rear disc brake
221300			Ate		2372301	[–] 23723 18.2		Ate		2413701	[–] 24137 16.7	⊕ rear disc brake
2.0	10/13→	110 / 150										
			Ate	epad	2372381	[–] 23723 18.2		Ate	epad	2413781	[–] 24137 16.7	⊕ rear disc brake
			Ate		82032000			Ate		82503500		⊕ rear disc brake
				PRO	92141303	ø 300 x 25 x 48.5				91079800	ø 228.6 x 42	⊕ rear drum brake
									PRO	92239003	ø 270.9 x 11 x 40.8	⊕ rear disc brake
221400			Ate		2372301	[–] 23723 18.2		Ate		2413701	[–] 24137 16.7	
2.0 FLEX	04/11→	119 / 162										
			Ate	epad	2372381	[–] 23723 18.2		Ate	epad	2413781	[–] 24137 16.7	
			Ate		82032000			Ate		82503500		
				PRO	92141303	ø 300 x 25 x 48.5			PRO	92239003	ø 270.9 x 11 x 40.8	
221500			Ate		2573601	[–] 25736 17.9		Ate		2521201	[–] 25212 16.1	
2.0 ST	09/11→	188 / 256										
			Ate		82032000			Ate	epad	2521281	[–] 25212 16.1	
				PRO	92262203	ø 320 x 25 x 48.4	06/12→	Ate		82503500		⊕ rear disc brake
										91079800	ø 228.6 x 42	⊕ rear drum brake
									PRO	92239003	ø 270.9 x 11 x 40.8	⊕ rear disc brake
221600			Ate		2573601	[–] 25736 17.9		Ate		2521201	[–] 25212 16.1	⊕ rear disc brake
2.0 ST	07/12→	184 / 250										
				PRO	92262203	ø 320 x 25 x 48.4		Ate	epad	2521281	[–] 25212 16.1	⊕ rear disc brake
								Ate		82062900		⊕ rear disc brake
								Ate		82503500		⊕ rear disc brake
										91079800	ø 228.6 x 42	⊕ rear drum brake
									PRO	92239003	ø 270.9 x 11 x 40.8	⊕ rear disc brake
221700			Ate		82032000			Ate		2521201	[–] 25212 16.1	⊕ rear disc brake 06/13→
Electric	09/11→	92 / 125										
								Ate	epad	2521281	[–] 25212 16.1	⊕ rear disc brake 06/13→
								Ate		82503500		⊕ rear disc brake
										91079800	ø 228.6 x 42	⊕ rear drum brake
									PRO	92239003	ø 270.9 x 11 x 40.8	⊕ rear disc brake
221800			Ate		82032000			Ate		2521201	[–] 25212 16.1	⊕ rear disc brake
Electric	07/13→	107 / 145										
								Ate	epad	2521281	[–] 25212 16.1	⊕ rear disc brake

→

		kW / hp										
FOCUS III 04/11→												
		221800							Ate		82503500	⊕ rear disc brake
Electric	07/13→	107 / 145									91079800	ø 228.6 x 42 ⊕ rear drum brake
										PRO	92239003	ø 270.9 x 11 x 40.8 ⊕ rear disc brake
FOCUS III Saloon 04/11→												
		221900	Ate		2372301	[–] 23723 18.2			Ate		2521201	[–] 25212 16.1 ⊕ rear disc brake
1.0 EcoBoost	02/12→	74 / 100										
1.0 EcoBoost	02/12→	92 / 125	Ate	epad	2372381	[–] 23723 18.2			Ate	epad	2521281	[–] 25212 16.1 ⊕ rear disc brake
1.6 Flexifuel	04/11→	88 / 120										
1.6 TDCi	04/11→	70 / 95										
1.6 TDCi	04/11→	85 / 115	Ate		82032000				Ate		82062900	⊕ rear disc brake
1.6 Ti	04/11→	77 / 105										
1.6 Ti	04/11→	92 / 125	Ate		82062900				Ate		82503500	⊕ rear disc brake
1.6 Ti	08/11→	63 / 85										
2.0	08/11→	119 / 162										
2.0 GDi	08/11→	125 / 170		PRO	92237703	ø 278 x 25 x 48.6					91079800	ø 228.6 x 42 ⊕ rear drum brake
2.0 TDCi	04/11→	85 / 115										
2.0 TDCi	04/11→	100 / 136								PRO	92239003	ø 270.9 x 11 x 40.8 ⊕ rear disc brake
2.0 TDCi	04/11→	103 / 140										
2.0 TDCi	04/11→	120 / 163										
		222000	Ate		2372301	[–] 23723 18.2			Ate		2521201	[–] 25212 16.1 ⊕ rear disc brake
1.6 EcoBoost	04/11→	110 / 150										
1.6 EcoBoost	04/11→	134 / 182	Ate	epad	2372381	[–] 23723 18.2			Ate	epad	2521281	[–] 25212 16.1 ⊕ rear disc brake
			Ate		82032000				Ate		82062900	⊕ rear disc brake
			Ate		82062900				Ate		82503500	⊕ rear disc brake
				PRO	92141303	ø 300 x 25 x 48.5					91079800	ø 228.6 x 42 ⊕ rear drum brake
										PRO	92239003	ø 270.9 x 11 x 40.8 ⊕ rear disc brake
		222100	Ate		2372301	[–] 23723 18.2			Ate		2521201	[–] 25212 16.1 ⊕ rear disc brake
1.6 Flexifuel	07/13→	110 / 150										
			Ate	epad	2372381	[–] 23723 18.2			Ate	epad	2521281	[–] 25212 16.1 ⊕ rear disc brake
				PRO	92141303	ø 300 x 25 x 48.5			Ate		82503500	⊕ rear disc brake
										PRO	92239003	ø 270.9 x 11 x 40.8 ⊕ rear disc brake
		222200	Ate		2372301	[–] 23723 18.2			Ate		82503500	⊕ rear disc brake
2.0	09/11→12/12	119 / 162										
2.0	10/13→	129 / 175	Ate	epad	2372381	[–] 23723 18.2					91079800	ø 228.6 x 42 ⊕ rear drum brake
2.0 Direct Flex	10/13→	131 / 178										
			Ate		82032000					PRO	92239003	ø 270.9 x 11 x 40.8 ⊕ rear disc brake
				PRO	92141303	ø 300 x 25 x 48.5						
		222300	Ate		2372301	[–] 23723 18.2			Ate		2413701	[–] 24137 16.7 ⊕ rear disc brake
2.0	10/13→	110 / 150										
			Ate	epad	2372381	[–] 23723 18.2			Ate	epad	2413781	[–] 24137 16.7 ⊕ rear disc brake
			Ate		82032000				Ate		82503500	⊕ rear disc brake
				PRO	92141303	ø 300 x 25 x 48.5					91079800	ø 228.6 x 42 ⊕ rear drum brake
										PRO	92239003	ø 270.9 x 11 x 40.8 ⊕ rear disc brake
		222400	Ate		2372301	[–] 23723 18.2			Ate		2413701	[–] 24137 16.7
2.0 FLEX	09/12→	119 / 162										
			Ate	epad	2372381	[–] 23723 18.2			Ate	epad	2413781	[–] 24137 16.7
			Ate		82032000				Ate		82503500	
				PRO	92141303	ø 300 x 25 x 48.5				PRO	92239003	ø 270.9 x 11 x 40.8
FOCUS III Stufenheck 04/11→ → FOCUS III Saloon, Page 389												
FOCUS III Turnier 05/11→												
		222500	Ate		2372301	[–] 23723 18.2			Ate		2521201	[–] 25212 16.1 ⊕ rear disc brake
1.0 EcoBoost	02/12→	74 / 100										
1.0 EcoBoost	02/12→	92 / 125	Ate	epad	2372381	[–] 23723 18.2			Ate	epad	2521281	[–] 25212 16.1 ⊕ rear disc brake
1.6 Flexifuel	05/11→	88 / 120										
1.6 LPG	02/12→	88 / 120										
1.6 TDCi	05/11→	70 / 95	Ate		82032000				Ate		82062900	⊕ rear disc brake
1.6 TDCi	05/11→	85 / 115										
1.6 TDCi ECOnetic	05/12→	77 / 105	Ate		82062900				Ate		82503500	⊕ rear disc brake
1.6 Ti	05/11→	77 / 105										
1.6 Ti	05/11→	92 / 125										
1.6 Ti	08/11→	63 / 85		PRO	92237703	ø 278 x 25 x 48.6				PRO	92239003	ø 270.9 x 11 x 40.8 ⊕ rear disc brake
2.0 TDCi	05/11→	85 / 115										
2.0 TDCi	05/11→	100 / 136										
2.0 TDCi	05/11→	103 / 140										
2.0 TDCi	05/11→	120 / 163										

		kW / hp												
FOCUS III Turnier 05/11→														
		222600	Ate		2372301	[–] 23723 18.2			Ate		2521201	[–] 25212 16.1	⊕ rear disc brake
1.5 EcoBoost	09/14→	110 / 150												
1.5 EcoBoost	09/14→	134 / 182	Ate	epad	2372381	[–] 23723 18.2			Ate	epad	2521281	[–] 25212 16.1	⊕ rear disc brake
1.5 TDCi	09/14→	70 / 95												
1.5 TDCi	09/14→	88 / 120		PRO	92141303	ø 300 x 25 x 48.5			Ate		82503500		⊕ rear disc brake
1.5 TDCi ECOnetic	09/14→	77 / 105												
1.6 Flexifuel	07/13→	110 / 150								PRO	92239003	ø 270.9 x 11 x 40.8	⊕ rear disc brake
		222700	Ate		2372301	[–] 23723 18.2			Ate		2521201	[–] 25212 16.1	⊕ rear disc brake
1.6 EcoBoost	05/11→	110 / 150												
1.6 EcoBoost	05/11→	134 / 182	Ate	epad	2372381	[–] 23723 18.2			Ate	epad	2521281	[–] 25212 16.1	⊕ rear disc brake
2.0 Ti-GDi	05/11→	125 / 170												
			Ate		82032000				Ate		82062900		⊕ rear disc brake
			Ate		82062900				Ate		82503500		⊕ rear disc brake
				PRO	92141303	ø 300 x 25 x 48.5				PRO	92239003	ø 270.9 x 11 x 40.8	⊕ rear disc brake
		222800	Ate		2372301	[–] 23723 18.2			Ate		2413701	[–] 24137 16.7	⊕ rear disc brake
2.0	10/13→	110 / 150												
			Ate	epad	2372381	[–] 23723 18.2			Ate	epad	2413781	[–] 24137 16.7	⊕ rear disc brake
			Ate		82032000				Ate		82503500		⊕ rear disc brake
				PRO	92141303	ø 300 x 25 x 48.5				PRO	92239003	ø 270.9 x 11 x 40.8	⊕ rear disc brake
		222900	Ate		2573601	[–] 25736 17.9			Ate		2521201	[–] 25212 16.1	⊕ rear disc brake
2.0 ST	07/12→	184 / 250												
				PRO	92262203	ø 320 x 25 x 48.4			Ate	epad	2521281	[–] 25212 16.1	⊕ rear disc brake
									Ate		82062900		⊕ rear disc brake
									Ate		82503500		⊕ rear disc brake
										PRO	92239003	ø 270.9 x 11 x 40.8	⊕ rear disc brake
FOCUS Clipper (DNW) 02/99→01/05 → FOCUS Estate (DNW), Page 390														
FOCUS C-MAX 10/03→03/07														
		223000	Ate		2372301	[–] 23723 18.2			Ate		2413701	[–] 24137 16.7		
1.6	10/03→03/07	74 / 100												
1.6 Ti	08/04→03/07	85 / 115	Ate	epad	2372381	[–] 23723 18.2			Ate	epad	2413781	[–] 24137 16.7		
1.8	10/03→03/07	88 / 120												
1.8	04/04→03/07	92 / 125	Ate		82032000				Ate		82062900			
1.8 Flexifuel	01/06→03/07	92 / 125												
			Ate		82062900				Ate		82503500			
				PRO	92141203	ø 278 x 25 x 48.5				PRO	92133703	ø 265 x 11 x 40.8		
		223100	Ate		2372301	[–] 23723 18.2			Ate		2413701	[–] 24137 16.7		
1.6 TDCi	10/03→03/07	80 / 109												
1.6 TDCi	02/05→03/07	66 / 90	Ate	epad	2372381	[–] 23723 18.2			Ate	epad	2413781	[–] 24137 16.7		
			Ate		82032000				Ate		82062900			
			Ate		82062900				Ate		82503500			
				PRO	92141203	ø 278 x 25 x 48.5				PRO	92133803	ø 280 x 10.9 x 40.8		
		223200	Ate		2372301	[–] 23723 18.2			Ate		2413701	[–] 24137 16.7		
1.8	09/05→03/07	90 / 122												
			Ate	epad	2372381	[–] 23723 18.2			Ate	epad	2413781	[–] 24137 16.7		
				PRO	92141203	ø 278 x 25 x 48.5				PRO	92133703	ø 265 x 11 x 40.8		
		223300	Ate		2372301	[–] 23723 18.2			Ate		2413701	[–] 24137 16.7		
1.8 TDCi	01/05→03/07	85 / 115												
2.0	03/04→03/07	107 / 145	Ate	epad	2372381	[–] 23723 18.2			Ate	epad	2413781	[–] 24137 16.7		
2.0 TDCi	10/03→03/07	98 / 133												
2.0 TDCi	10/03→03/07	100 / 136	Ate		82032000				Ate		82062900			
			Ate		82062900				Ate		82503500			
				PRO	92141303	ø 300 x 25 x 48.5				PRO	92133803	ø 280 x 10.9 x 40.8		
FOCUS Estate (DNW) 02/99→01/05														
		223400	Ate		2315402	[–] 23154 19.3			Luc		2335301	[–] 23353 14	⊕ rear disc brake	
1.4 16V	02/99→11/04	55 / 75												
			Ate		82062900				Luc		82062800			

→

		kW / hp										
FOCUS Estate (DNW) 02/99→01/05												
		223400		PRO	92096203	ø 258 x 22 x 43.5				91052500	ø 203.2 x 38	⊕ rear drum brake
1.4 16V	02/99→11/04	55 / 75						Luc		97014000		
										83052501	bore ø 22.2 ø 203.2 x 38	
										84052501	bore ø 22.2 ø 203.2 x 38	
									PRO	92088403	ø 253 x 10.3 x 33.2	⊕ rear disc brake
										94022500	ø 203,0 x 44	⊕ rear drum brake
		223500	Ate		2315402	[–] 23154 19.3		Luc		2335301	[–] 23353 14	⊕ rear disc brake
1.6 16V	02/99→11/04	74 / 100										
1.6 16V Flexifuel	01/02→11/04	75 / 102	Ate		82062900			Luc		82062800		
				PRO	92096203	ø 258 x 22 x 43.5				91052500	ø 203.2 x 38	⊕ rear drum brake
								Luc		97014000		
										83052501	bore ø 22.2 ø 203.2 x 38	⊕ man.
										84052500	bore ø 20.6 ø 203.2 x 38	⊕ autom.
										84052501	bore ø 22.2 ø 203.2 x 38	⊕ man.
									PRO	92088403	ø 253 x 10.3 x 33.2	⊕ rear disc brake
										94022500	ø 203,0 x 44	⊕ rear drum brake
		223600	Ate		2315402	[–] 23154 19.3		Luc		2335301	[–] 23353 14	⊕ rear disc brake
1.8 16V	02/99→11/04	85 / 115										
1.8 BiFuel	02/03→01/05	82 / 111	Ate		82062900			Luc		82062800		
1.8 DI / TDDi	08/99→11/04	55 / 75										
1.8 Turbo DI / TDDi	02/99→11/04	66 / 90		PRO	92096203	ø 258 x 22 x 43.5				91052500	ø 203.2 x 38	⊕ rear drum brake
2.0 16V	02/99→11/04	96 / 131						Luc		97014000		
										84052500	bore ø 20.6 ø 203.2 x 38	⊕ rear drum brake
									PRO	92088403	ø 253 x 10.3 x 33.2	⊕ rear disc brake
										94022500	ø 203,0 x 44	⊕ rear drum brake
		223700	Ate		2315402	[–] 23154 19.3		Luc		2335301	[–] 23353 14	⊕ rear disc brake
1.8 TDCi	03/01→11/04	85 / 115										
1.8 TDCi	08/02→11/04	74 / 100	Ate		82062900			Luc		82062800		
				PRO	92096203	ø 258 x 22 x 43.5				91052500	ø 203.2 x 38	⊕ rear drum brake
								Luc		97014000		
										84052500	bore ø 20.6 ø 203.2 x 38	
									PRO	92088403	ø 253 x 10.3 x 33.2	⊕ rear disc brake
										94022500	ø 203,0 x 44	⊕ rear drum brake
		223800	Ate		2344004	[–] 23440 17.6		Luc		2335301	[–] 23353 14	
ST170	08/02→11/04	127 / 173	Ate		82032100			Luc		82062800		
			Ate		82062900				PRO	92172403	ø 280 x 10 x 33	
				PRO	92139903	ø 300 x 24 x 44.5						
FOCUS Kombi (DNW) 02/99→01/05 → FOCUS Estate (DNW), Page 390												
FOCUS Saloon (DFW) 02/99→03/05												
		223900	Ate		2315402	[–] 23154 19.3		Luc		2335301	[–] 23353 14	⊕ rear disc brake
1.4 16V	02/99→11/04	55 / 75										
1.6 16V	02/99→11/04	74 / 100	Ate		82062900			Luc		82062800		
1.8 16V	02/99→11/04	85 / 115										
2.0 16V	02/99→11/04	96 / 131		PRO	92096203	ø 258 x 22 x 43.5				91052500	ø 203.2 x 38	⊕ rear drum brake
								Luc		97014000		
										84052500	bore ø 20.6 ø 203.2 x 38	⊕ rear drum brake

		kW / hp											
FOCUS Saloon (DFW) 02/99→03/05													
		223900											
1.4 16V	02/99→11/04	55 / 75											
1.6 16V	02/99→11/04	74 / 100											
1.8 16V	02/99→11/04	85 / 115											
2.0 16V	02/99→11/04	96 / 131											
		224000	Ate		2315402	[–] 23154 19.3		Luc		2335301	[–] 23353 14	⊕ rear disc brake	
1.8 TDCi	03/01→11/04	85 / 115											
1.8 TDCi	08/02→11/04	74 / 100	Ate		82062900			Luc		82062800			
1.8 Turbo DI / TDDi	08/01→03/05	55 / 75		PRO	92096203	ø 258 x 22 x 43.5				91052500	ø 203.2 x 38	⊕ rear drum brake	
								Luc		97014000			
									PRO	92088403	ø 253 x 10.3 x 33.2	⊕ rear disc brake	
										94022500	ø 203,0 x 44	⊕ rear drum brake	
		224100	Ate		2315402	[–] 23154 19.3		Luc		2335301	[–] 23353 14	⊕ rear disc brake	
1.8 Turbo DI / TDDi	02/99→11/04	66 / 90											
			Ate		82062900			Luc		82062800			
				PRO	92096203	ø 258 x 22 x 43.5				91052500	ø 203.2 x 38	⊕ rear drum brake	
								Luc		97014000			
										84052502	bore ø 19 ø 203.2 x 39	⊕ rear drum brake	
									PRO	92088403	ø 253 x 10.3 x 33.2	⊕ rear disc brake	
										94022500	ø 203,0 x 44	⊕ rear drum brake	
FOCUS Stufenheck (DFW) 02/99→03/05 → FOCUS Saloon (DFW), Page 391													
FUSION (JU_) 08/02→													
		224200	Ate		2360406	[–] 23604 18.8		Lkh		91057300	ø 203.2 x 38		
1.25	08/04→	55 / 75											
1.3	11/02→	44 / 60	Ate		82029200			Lkh		97015500			
1.4	08/02→	59 / 80											
1.4 LPG	01/10→	59 / 80	Ate		82062900			Lkh		84057301	bore ø 19 ø 203.2 x 38		
1.4 TDCi	08/02→	50 / 68											
1.6	08/02→	74 / 100		PRO	92096203	ø 258 x 22 x 43.5				94026700	ø 203,0 x 44.5		
1.6 TDCi	11/04→	66 / 90											
FUSION Saloon 05/06→													
		224300	Ake		2458201	[–] 24582 18.4		Ake		2458101	[–] 24581 15		
2.3	05/06→04/09	119 / 162											
2.5	05/09→	127 / 173											
3.0	05/06→04/09	164 / 223											
3.0	05/09→	179 / 243											
FUSION Stufenheck 05/06→ → FUSION Saloon, Page 392													
GALAXY (WA6) 05/06→ → GALAXY, Page 394													
GALAXY (WGR) 03/95→05/06													
		224400	Ate		2184802	[–] 21848 19.7	→04/00 Ø 288 mm	Luc		2355402	[–] 23554 17.2	→04/00	
1.9 TDI	03/95→05/06	66 / 90											
			Ate		2184903	[+] 21849 20.6	05/00→ →05/01 Ø 288 mm	Luc	epad	2355481	[–] 23554 17.2	→04/00	
			Ate		2341801	[+] 23418 19.6	05/01→ Ø 300 mm	Luc		2355403	[+] 23554 17.2	04/00→	
			Ate		82029300		05/01→ Ø 288 mm	Luc		82037300			
			Ate		82062900			Luc		82062800			
			Ate		82508900		→05/01 Ø 300 mm		PRO	92074303	ø 268 x 10 x 45.7		
				PRO	92074203	ø 288 x 25 x 55.3	→05/01						
				PRO	92109803	ø 300 x 26 x 56	05/01→						
		224500	Ate		2184802	[–] 21848 19.7		Luc		2355402	[–] 23554 17.2		
1.9 TDI	08/97→04/00	81 / 110											
2.3 4x4	09/96→04/00	107 / 145	Ate		82029300			Luc	epad	2355481	[–] 23554 17.2		
2.8 i V6	11/95→04/00	128 / 174											
2.8 i V6 4x4	04/96→04/00	128 / 174	Ate		82062900			Luc		82037300			
				PRO	92074203	ø 288 x 25 x 55.3		Luc		82062800			
									PRO	92074303	ø 268 x 10 x 45.7		
		224600	Ate		2184903	[+] 21849 20.6	→05/01 Ø 288 mm	Luc		2355403	[+] 23554 17.2		
1.9 TDI	04/00→05/06	85 / 115											

→

kW / hp

GALAXY (WGR) 03/95→05/06

224600 1.9 TDI	04/00→05/06	85 / 115	Ate		2341801	[+] 23418 19.6	05/01→ Ø 300 mm	Luc		82037300			
			Ate		82029300		→05/01 Ø 288 mm	Luc		82062800			
			Ate		82062900				PRO	92074303	ø 268 x 10 x 45.7		
			Ate		82508900		05/01→ Ø 300 mm						
				PRO	92074203	ø 288 x 25 x 55.3	→05/01						
				PRO	92109803	ø 300 x 26 x 56	05/01→						
224700 1.9 TDI	02/03→05/06	96 / 130	Ate		2341801	[+] 23418 19.6		Luc		2344605	[+] 23446 16.5	⊕ rim size 16"	
			Ate		82062900			Luc		2355403	[+] 23554 17.2	⊕ rim size 15"	
			Ate		82508900			Luc		82037300		⊕ rim size 15"	
				PRO	92109803	ø 300 x 26 x 56		Luc		82059600		⊕ rim size 16"	
								Luc		82062800			
									PRO	92074303	ø 268 x 10 x 45.7		
224800 1.9 TDI	05/05→05/06	110 / 150	Ate		2341801	[+] 23418 19.6		Luc		2344605	[+] 23446 16.5		
			Ate		82062900			Luc		82059600			
			Ate		82508900			Luc		82062800			
				PRO	92109803	ø 300 x 26 x 56			PRO	92074303	ø 268 x 10 x 45.7		
224900 2.0 i	11/95→05/06	85 / 116	Ate		2184802	[–] 21848 19.7	→05/01 Ø 288 mm	Luc		2355402	[–] 23554 17.2		
			Ate		2184903	[+] 21849 20.6	04/00→ →05/01 Ø 288 mm	Luc	epad	2355481	[–] 23554 17.2		
			Ate		2341801	[+] 23418 19.6	05/01→ Ø 300 mm	Luc		82037300			
			Ate		82029300		→05/01 Ø 288 mm	Luc		82062800			
			Ate		82062900				PRO	92074303	ø 268 x 10 x 45.7		
			Ate		82508900		05/01→ Ø 300 mm						
				PRO	92074203	ø 288 x 25 x 55.3	→05/01						
				PRO	92109803	ø 300 x 26 x 56	05/01→						
225000 2.3 16V	01/97→05/06	107 / 146	Ate		2184802	[–] 21848 19.7	→05/01 Ø 288 mm	Luc		2355402	[–] 23554 17.2	→04/00	
			Ate		2184903	[+] 21849 20.6	05/00→ →05/01 Ø 288 mm	Luc	epad	2355481	[–] 23554 17.2	→04/00	
			Ate		2341801	[+] 23418 19.6	05/01→ Ø 300 mm	Luc		2355403	[+] 23554 17.2	04/00→	
			Ate		82029300		→05/01 Ø 288 mm	Luc		82037300			
			Ate		82062900			Luc		82062800			
			Ate		82508900		05/01→ Ø 300 mm		PRO	92074303	ø 268 x 10 x 45.7		
				PRO	92074203	ø 288 x 25 x 55.3	→05/01						
				PRO	92109803	ø 300 x 26 x 56	05/01→						
225100 2.3 16V	09/01→05/06	103 / 140	Ate		2341801	[+] 23418 19.6		Luc		2355403	[+] 23554 17.2		
			Ate		82062900			Luc		82037300			
			Ate		82508900			Luc		82062800			
				PRO	92109803	ø 300 x 26 x 56			PRO	92074303	ø 268 x 10 x 45.7		
225200 2.8 V6	04/00→05/06	150 / 204	Ate		2326903	[+] 23269 20.1		Luc		2344605	[+] 23446 16.5		
			Ate		82029300			Luc		82059600			
			Ate		82062900			Luc		82063300			
					92109900	ø 313 x 26 x 56.2			PRO	92098103	ø 294 x 13.5 x 41		

F - H

		kW / hp											
GALAXY (WGR) 03/95→05/06													
225200													
2.8 V6	04/00→05/06	150 / 204		PRO	**92109903**	ø 313 x 26 x 56.2							
GALAXY 05/06→													
225300			Ate		**2412301**	[–] 24123 20.3		TRW		**2449602**	[–] 24496 16.9	⊕ elect. handbr.
1.6 EcoBoost	02/11→	118 / 160										
1.6 TDCi	02/11→	85 / 115	Ate		**82039300**			TRW		**2453703**	[–] 24537 15.7	⊖ elect. handbr.
2.0 TDCi	05/06→	100 / 136										
2.0 TDCi	03/10→	120 / 163			**92159200**	ø 300 x 28 x 52		Luc		**82073200**		⊖ elect. handbr.
				PRO	**92159203**	ø 300 x 28 x 52		Luc		**82073800**		⊕ elect. handbr.
								Luc		**82063300**		
										92159300	ø 302 x 11 x 50.8	
									PRO	**92159303**	ø 302 x 11 x 50.8	
225400			Ate		**2412301**	[–] 24123 20.3		TRW		**2449602**	[–] 24496 16.9	⊕ elect. handbr.
1.8 TDCi	05/06→	74 / 100										
1.8 TDCi	05/06→	92 / 125	Ate		**82039300**			TRW		**2453703**	[–] 24537 15.7	⊖ elect. handbr.
2.0	05/06→	107 / 145										
2.0 Flexifuel	05/06→	107 / 145	Ate		**82062900**			Luc		**82073200**		⊖ elect. handbr.
2.0 TDCi	05/06→	96 / 130										
2.0 TDCi	05/06→	103 / 140			**92159200**	ø 300 x 28 x 52		Luc		**82073800**		⊕ elect. handbr.
2.0 TDCi	11/07→	85 / 115										
2.3	07/07→	118 / 160		PRO	**92159203**	ø 300 x 28 x 52		Luc		**82063300**		
										92159300	ø 302 x 11 x 50.8	
									PRO	**92159303**	ø 302 x 11 x 50.8	
225500			Ate		**2414201**	[–] 24142 19.8		TRW		**2449602**	[–] 24496 16.9	⊕ elect. handbr.
2.0 EcoBoost	03/10→	149 / 203										
2.0 EcoBoost	07/10→	146 / 199	Ate		**82515500**			TRW		**2453703**	[–] 24537 15.7	⊖ elect. handbr.
					92162300	ø 316 x 28 x 52		Luc		**82073200**		⊖ elect. handbr.
				PRO	**92162303**	ø 316 x 28 x 52		Luc		**82073800**		⊕ elect. handbr.
								Luc		**82063300**		
										92159300	ø 302 x 11 x 50.8	
									PRO	**92159303**	ø 302 x 11 x 50.8	
225600			Ate		**2412301**	[–] 24123 20.3	2008-10-10→	TRW		**2449602**	[–] 24496 16.9	⊕ elect. handbr.
2.2 TDCi	03/08→	129 / 175	Ate		**2414201**	[–] 24142 19.8	→2008-10-10	TRW		**2453703**	[–] 24537 15.7	⊖ elect. handbr.
			Ate		**82062900**			Luc		**82073200**		⊖ elect. handbr.
			Ate		**82515500**			Luc		**82073800**		⊕ elect. handbr.
					92159200	ø 300 x 28 x 52	2008-10-10→	Luc		**82063300**		
					92162300	ø 316 x 28 x 52	→2008-10-10			**92159300**	ø 302 x 11 x 50.8	
				PRO	**92159203**	ø 300 x 28 x 52	2008-10-10→		PRO	**92159303**	ø 302 x 11 x 50.8	
				PRO	**92162303**	ø 316 x 28 x 52	→2008-10-10					
225700			Ate		**2412301**	[–] 24123 20.3		TRW		**2449602**	[–] 24496 16.9	⊕ elect. handbr.
2.2 TDCi	07/10→	147 / 200	Ate		**82062900**			TRW		**2453703**	[–] 24537 15.7	⊖ elect. handbr.
			Ate		**82515500**			Luc		**82073200**		⊖ elect. handbr.
					92159200	ø 300 x 28 x 52	2008-10-10→	Luc		**82073800**		⊕ elect. handbr.
					92162300	ø 316 x 28 x 52	→2008-10-10	Luc		**82063300**		
				PRO	**92159203**	ø 300 x 28 x 52	2008-10-10→			**92159300**	ø 302 x 11 x 50.8	
				PRO	**92162303**	ø 316 x 28 x 52	→2008-10-10		PRO	**92159303**	ø 302 x 11 x 50.8	
GRAND C-MAX 12/10→													
225800			Ate		**2372301**	[–] 23723 18.2		Ate		**2521201**	[–] 25212 16.1	
1.0 EcoBoost	10/12→	74 / 100										
1.0 EcoBoost	10/12→	92 / 125										
1.6 TDCi	12/10→	70 / 95										

		kW / hp												
GRAND C-MAX 12/10→														
1.6 TDCi	12/10→	85 / 115	Ate	epad	2372381	[–] 23723 18.2			Ate	epad	2521281	[–] 25212 16.1		
1.6 Ti	12/10→	77 / 105												
1.6 Ti	12/10→	92 / 125	Ate		82032000				Ate		82062900			
			Ate		82062900				Ate		82503500			
				PRO	92237703	ø 278 x 25 x 48.6				PRO	92238903	ø 279.8 x 11 x 50.8		
		225900	Ate		2372301	[–] 23723 18.2			Ate		2521201	[–] 25212 16.1		
1.6 EcoBoost	12/10→	110 / 150												
1.6 EcoBoost	12/10→	134 / 182	Ate	epad	2372381	[–] 23723 18.2			Ate	epad	2521281	[–] 25212 16.1		
2.0 TDCi	12/10→	120 / 163												
2.0 TDCi	02/11→	85 / 115	Ate		82032000				Ate		82062900			
2.0 TDCi	02/11→	100 / 136	Ate		82062900				Ate		82503500			
2.0 TDCi	02/11→	103 / 140												
				PRO	92141303	ø 300 x 25 x 48.5				PRO	92238903	ø 279.8 x 11 x 50.8		
GT 06/03→														
		226000	Bre		2332501	[+] 23325 15			Bre		2332501	[+] 23325 15		
5.4	06/03→	368 / 500												
II 01/12→ → ECOSPORT, Page 375														
IKON V (JH_, JD_) 11/01→03/10 → FIESTA V (JH_, JD_), Page 380														
KA (RB_) 09/96→11/08														
		226100	Ate		2310101	[–] 23101 17.5			Luc		91048800	ø 180 x 32		
1.0 i	01/97→07/99	39 / 53		PRO	92075303	ø 239.5 x 12 x 43								
				PRO	92051003	ø 239.5 x 20 x 43								
		226200	Ate		2310101	[–] 23101 17.5			Luc		91048800	ø 180 x 32	Lucas	
1.0 i	07/97→09/99	38 / 52	Ate		82029200				Luc		97010200		Lucas	
			Ate		82062900				Luc		84048800	bore ø 17.5 ø 180 x 32		
				PRO	92075303	ø 239.5 x 12 x 43					94012900	ø 180,0 x 44		
		226300	Ate		2310101	[–] 23101 17.5	→02/00		Luc		91048800	ø 180 x 32	Lucas →01/00	
1.0 i	09/99→11/08	48 / 65	Ate		2320001	[–] 23200 18.8	02/00→		Lkh		91060000	ø 180 x 32	02/00→ Lockheed	
			Ate		82029200				Lkh		97009500		02/00→	
			Ate		82062900				Luc		97010200		Lucas →01/00	
				PRO	92075303	ø 239.5 x 12 x 43	→02/00				94012900	ø 180,0 x 44	→02/00	
				PRO	92051003	ø 239.5 x 20 x 43	03/00→				94018500	ø 180,0 x 44	⊕ ABS 02/00→	
		226400	Ate		2310101	[–] 23101 17.5	→02/00		Luc		91048800	ø 180 x 32	Lucas →01/00	
1.3 i	09/96→10/02	37 / 50												
1.3 i	09/96→11/08	44 / 60	Ate		2320001	[–] 23200 18.8	02/00→		Lkh		91060000	ø 180 x 32	02/00→ Lockheed	
1.3 i	06/98→11/08	36 / 49	Ate		82029200				Lkh		97009500		02/00→	
			Ate		82062900				Luc		97010200		Lucas →01/00	
				PRO	92075303	ø 239.5 x 12 x 43	→02/00		Luc		84048800	bore ø 17.5 ø 180 x 32	Lucas →01/00	
				PRO	92051003	ø 239.5 x 20 x 43	03/00→		Lkh		84060000	bore ø 19 ø 180 x 32	Lockheed 02/00→	
											94012900	ø 180,0 x 44	→02/00	
											94018500	ø 180,0 x 44	⊕ ABS →02/00	
		226500	Ate		2320001	[–] 23200 18.8			Lkh		91060000	ø 180 x 32		
1.3 i	08/02→11/08	51 / 70	Ate		82029200				Lkh		97009500			
			Ate		82062900						94018500	ø 180,0 x 44		
				PRO	92051003	ø 239.5 x 20 x 43								
		226600	Ate		2360406	[–] 23604 18.8			Lkh		91057300	ø 203.2 x 38		
1.6	10/06→12/07	68 / 92												
1.6 i	07/03→11/08	70 / 95	Ate		82029200				Lkh		97015500			
1.6 i	11/05→09/08	71 / 96												

		kW / hp											
KA (RB_) 09/96→11/08													
		226600	Ate		**82062900**					**94019000**	ø 203,0 x 49	
1.6	10/06→12/07	68 / 92										
1.6 i	07/03→11/08	70 / 95										
1.6 i	11/05→09/08	71 / 96		PRO	**92096203**	ø 258 x 22 x 43.5						
KA (RU8) 10/08→ → KA, Page 396													
KA 01/08→													
		226700	Ate		**2120203**	[–] 21202 17.8						
1.0	10/08→	48 / 65										
1.0 Flex	10/08→	51 / 69										
		226800	Ate		**2310301**	[–] 23103 17.5						
1.6	02/08→	70 / 95										
1.6 Flex	01/08→	75 / 102										
KA 10/08→													
		226900	Ben		**2143603**	[+] 21436 17	→10/10		Bos	**91064600**	ø 180 x 32	
1.2	10/08→	51 / 69	Ben		**2143609**	[+] 21436 17	11/10→		Ben	**97005800**		
				PRO	**92061103**	ø 240 x 11 x 40				**84064600**	bore ø 20.6 ø 180 x 32	
										94014800	ø 180,0 x 40.1	
		227000	Bos		**2407202**	[+] 24072 17.7	→MY 2012		Bos	**91064600**	ø 180 x 32	
1.3 TDCi	10/08→	55 / 75	Bos		**2476401**	[+] 24764 17.7	MY 2013→		Ben	**97005800**		
			Bos		**82054300**					**84064600**	bore ø 20.6 ø 180 x 32	
				PRO	**92118003**	ø 240 x 20 x 40.5				**94014800**	ø 180,0 x 40.1	
KA Van (RB) 05/02→05/05													
		227100	Ate		**2320001**	[–] 23200 18.8			Lkh	**91060000**	ø 180 x 32	Lockheed
1.3 i	05/02→05/05	44 / 60	Ate		**82029200**				Lkh	**97009500**		
			Ate		**82062900**				Lkh	**84060000**	bore ø 19 ø 180 x 32	Lockheed
				PRO	**92051003**	ø 239.5 x 20 x 43						
KUGA I 03/08→													
		227200	Ate		**2372301**	[–] 23723 18.2			TRW	**2453703**	[–] 24537 15.7	
2.0 TDCi	03/08→	100 / 136										
2.0 TDCi	03/10→	103 / 140	Ate	epad	**2372381**	[–] 23723 18.2			Luc	**82073200**		
2.0 TDCi 4x4	03/08→	100 / 136										
2.0 TDCi 4x4	03/10→	103 / 140	Ate		**82032000**				Luc	**82063300**		
2.0 TDCi 4x4	03/10→	120 / 163										
2.5	03/09→	147 / 200	Ate		**82062900**					**92159300**	ø 302 x 11 x 50.8	
2.5 4x4	03/09→	147 / 200										
				PRO	**92141303**	ø 300 x 25 x 48.5				PRO **92159303**	ø 302 x 11 x 50.8	
KUGA II 03/13→													
		227300	Ate		**2372301**	[–] 23723 18.2	⊕ AUS ⊕ NZ ⊕ J		Ate	**2521201**	[–] 25212 16.1	
1.6	03/13→	133 / 181										
1.6 EcoBoost	03/13→	110 / 150	Ate	epad	**2372381**	[–] 23723 18.2	⊕ AUS ⊕ NZ ⊕ J		Ate	**2521281**	[–] 25212 16.1	
1.6 EcoBoost 4x4	03/13→	134 / 182										
			Ate		**2574801**	[–] 25748 18.2			Ate	**82503500**		
			Ate		**82032000**					PRO **92238903**	ø 279.8 x 11 x 50.8	
				PRO	**92141303**	ø 300 x 25 x 48.5						
		227400		PRO	**92262203**	ø 320 x 25 x 48.4	→2014-10		Ate	**2521201**	[–] 25212 16.1	
1.6 4x4	03/13→	133 / 181							Ate	**2521281**	[–] 25212 16.1	
									Ate	**82503500**		
		227500	Ate		**2573601**	[–] 25736 17.9			Ate	**2521201**	[–] 25212 16.1	
2.0	03/13→	179 / 243										
2.0 4x4	03/13→	179 / 243		PRO	**92262203**	ø 320 x 25 x 48.4			Ate	**2521281**	[–] 25212 16.1	
2.0 TDCi	03/13→	100 / 136										
2.0 TDCi	03/13→	103 / 140										
2.0 TDCi 4x4	03/13→	100 / 136							Ate	**82503500**		
2.0 TDCi 4x4	03/13→	103 / 140										
2.0 TDCi 4x4	03/13→	120 / 163								PRO **92238903**	ø 279.8 x 11 x 50.8	
MAVERICK 02/01→													
		227600	Ate		**2378701**	[–] 23787 18.3	⊕ rear drum brake		Ate	**2467001**	[–] 24670 17.1	⊕ rear disc brake
2.0 16V	02/01→	91 / 124										
3.0 V6 24V	02/01→	145 / 197										

→

		kW / hp											
MAVERICK 02/01→													
		227600	Ate		2443901	[–] 24439 15	⊕ rear disc brake 12/03→			91060600	ø 228.6 x 43	⊕ rear drum brake
2.0 16V	02/01→	91 / 124	Ate		82029300		Teves		PRO	92197803	ø 302 x 12 x 56	⊕ rear disc brake
3.0 V6 24V	02/01→	145 / 197	Ate		82062900		Teves					
				PRO	92146503	ø 278 x 24 x 47	⊕ rear drum brake					
				PRO	92197703	ø 303 x 26 x 47	12/03→ ⊕ rear disc brake					
		227700	Ate		2378701	[–] 23787 18.3	⊕ rear drum brake	Ate		2467001	[–] 24670 17.1	⊕ rear disc brake
2.3 16V	03/04→	110 / 150										
3.0 V6 24V	03/04→	149 / 203										
3.0 V6 24V	09/07→12/10	179 / 240	Ate		2443901	[–] 24439 15	⊕ rear disc brake			91060600	ø 228.6 x 43	⊕ rear drum brake
			Ate		82029300		Teves		PRO	92197803	ø 302 x 12 x 56	⊕ rear disc brake
			Ate		82062900		Teves					
				PRO	92146503	ø 278 x 24 x 47	⊕ rear drum brake					
				PRO	92197703	ø 303 x 26 x 47	⊕ rear disc brake					
METROSTAR 10/00→02/07													
		227800	Bos		2327904	[–] 23279 18.4		Bos		2426001	[–] 24260 16.3	09/04→
2.0	10/00→02/07	107 / 145										
2.5	10/00→02/07	125 / 170	Bos		82063800			Bos		2355701	[–] 23557 17.2	→08/04
			Bos		82510100			Bos		82054300		
				PRO	92109603	ø 300 x 24 x 47			PRO	92109703	ø 280 x 12 x 34	
MONDEO II (BAP) 09/96→11/00													
		227900	Ate		2139408	[–] 21394 18.5		Bos		2341007	[–] 23410 15.7	⊕ rear disc brake
1.6 i	09/96→11/00	66 / 90										
1.8 i	09/96→11/00	85 / 115										
1.8 TD	09/96→11/00	66 / 90	Ate		2307104	[+] 23071 18.5		Bos		2341008	[+] 23410 15.7	⊕ rear disc brake
			Ate		82032100			Bos		82031600		⊕ rear disc brake
			Ate		82062900					91046600	ø 203.2 x 38.5	⊕ rear drum brake →12/97 12/97→ ⊖ D ⊖ A ⊖ CH
					92075400	ø 278 x 24 x 47	⊕ rim size 15"			91049400	ø 228.6 x 45	⊕ rear drum brake 12/97→ ⊕ D ⊕ A ⊕ CH
				PRO	92063503	ø 260 x 24 x 47	⊕ rim size 14"	Luc		97009100		⊕ rear drum brake →12/97 12/97→ ⊖ D ⊖ A ⊖ CH
								Luc		97009200		⊕ rear drum brake 12/97→ ⊕ D ⊕ A ⊕ CH
										84046600	bore ø 22.2 ø 203.2 x 36	⊕ rear drum brake →12/97 12/97→ ⊖ D ⊖ A ⊖ CH
										84049400	bore ø 20.6 ø 228.6 x 45	⊕ rear drum brake 12/97→ ⊕ D ⊕ A ⊕ CH
									PRO	92063603	ø 253 x 20 x 43.7	⊕ rear disc brake
										94013100	ø 228,6 x 54	⊕ rear drum brake 12/97→ ⊕ D ⊕ A ⊕ CH
										94015100	ø 203,0 x 48.5	⊕ rear drum brake →12/97 12/97→ ⊖ D ⊖ A ⊖ CH
		228000	Ate		2139408	[–] 21394 18.5		Bos		2341007	[–] 23410 15.7	⊕ rear disc brake
1.6 i 16V	05/98→11/00	70 / 95										
			Ate		2307104	[+] 23071 18.5		Bos		2341008	[+] 23410 15.7	⊕ rear disc brake
			Ate		82032100			Bos		82031600		⊕ rear disc brake
			Ate		82062900					91046600	ø 203.2 x 38.5	⊕ rear drum brake ⊖ D ⊖ A ⊖ CH
					92075400	ø 278 x 24 x 47	⊕ rim size 15"			91049400	ø 228.6 x 45	⊕ rear drum brake ⊕ D ⊕ A ⊕ CH
				PRO	92063503	ø 260 x 24 x 47	⊕ rim size 14"	Luc		97009100		⊕ rear drum brake ⊖ D ⊖ A ⊖ CH
								Luc		97009200		⊕ rear drum brake ⊕ D ⊕ A ⊕ CH
										84046600	bore ø 22.2 ø 203.2 x 36	⊕ rear drum brake ⊖ D ⊖ A ⊖ CH
										84049400	bore ø 20.6 ø 228.6 x 45	⊕ rear drum brake ⊕ D ⊕ A ⊕ CH
									PRO	92063603	ø 253 x 20 x 43.7	⊕ rear disc brake
										94013100	ø 228,6 x 54	⊕ rear drum brake ⊕ D ⊕ A ⊕ CH

		kW / hp											
MONDEO II (BAP) 09/96→11/00													
1.6 i 16V	05/98→11/00	228000 70 / 95								94015100	ø 203,0 x 48.5		⊕ rear drum brake ⊖ D ⊖ A ⊖ CH
2.0 i	09/96→11/00	228100 96 / 131	Ate		2139408	[–] 21394 18.5		Bos		2341007	[–] 23410 15.7		⊕ rear disc brake
			Ate		2307104	[+] 23071 18.5		Bos		2341008	[+] 23410 15.7		⊕ rear disc brake
			Ate		82032100			Bos		82031600			⊕ rear disc brake
			Ate		82062900					91049400	ø 228.6 x 45		⊕ rear drum brake
					92075400	ø 278 x 24 x 47	⊕ rim size 15"	Luc		97009200			⊕ rear drum brake
				PRO	92063503	ø 260 x 24 x 47	⊕ rim size 14"			84049401	bore ø 22.2 ø 228.6 x 45		⊕ rear drum brake
									PRO	92063603	ø 253 x 20 x 43.7		⊕ rear disc brake
										94013100	ø 228,6 x 54		⊕ rear drum brake
2.5 24V	09/96→11/00	228200 125 / 170	Ate		2135803	[–] 21358 19.8	→12/97	Bos		2341007	[–] 23410 15.7		
			Ate		2139408	[–] 21394 18.5	12/97→	Bos		2341008	[+] 23410 15.7		
			Ate		2191003	[+] 21910 19.8	→12/97	Bos		82031600			
			Ate		2307104	[+] 23071 18.5	12/97→		PRO	92063603	ø 253 x 20 x 43.7		
			Ate		82032100								
			Ate		82062900								
					92075400	ø 278 x 24 x 47							
2.5 24V	06/00→11/00	228300 125 / 170	Ate		2139408	[–] 21394 18.5		Bos		2341007	[–] 23410 15.7		
2.5 ST 200	05/99→11/00	151 / 205	Ate		2307104	[+] 23071 18.5		Bos		2341008	[+] 23410 15.7		
			Ate		82032100			Bos		82031600			
			Ate		82062900				PRO	92063603	ø 253 x 20 x 43.7		
					92075400	ø 278 x 24 x 47							
MONDEO II Clipper (BNP) 09/96→11/00 → MONDEO II Estate (BNP), Page 398													
MONDEO II Estate (BNP) 09/96→11/00													
1.6 i	09/96→11/00	228400 66 / 90	Ate		2139408	[–] 21394 18.5		Bos		2341007	[–] 23410 15.7		⊕ rear disc brake
1.6 i 16V	05/98→11/00	70 / 95											
1.8 i	09/96→11/00	85 / 115	Ate		2307104	[+] 23071 18.5		Bos		2341008	[+] 23410 15.7		⊕ rear disc brake
1.8 TD	09/96→11/00	66 / 90	Ate		82032100			Bos		82031600			⊕ rear disc brake
			Ate		82062900					91049400	ø 228.6 x 45		⊕ rear drum brake
					92075400	ø 278 x 24 x 47	⊕ rim size 15"	Luc		97009200			⊕ rear drum brake
				PRO	92063503	ø 260 x 24 x 47	⊕ rim size 14"			84049400	bore ø 20.6 ø 228.6 x 45		⊕ rear drum brake
									PRO	92063603	ø 253 x 20 x 43.7		⊕ rear disc brake
										94013100	ø 228,6 x 54		⊕ rear drum brake
2.0 i	09/96→11/00	228500 96 / 131	Ate		2139408	[–] 21394 18.5		Bos		2341007	[–] 23410 15.7		⊕ rear disc brake
			Ate		2307104	[+] 23071 18.5		Bos		2341008	[+] 23410 15.7		⊕ rear disc brake
			Ate		82032100			Bos		82031600			⊕ rear disc brake
			Ate		82062900					91049400	ø 228.6 x 45		⊕ rear drum brake
					92075400	ø 278 x 24 x 47	⊕ rim size 15"	Luc		97009200			⊕ rear drum brake
				PRO	92063503	ø 260 x 24 x 47	⊕ rim size 14"			84049401	bore ø 22.2 ø 228.6 x 45		⊕ rear drum brake
									PRO	92063603	ø 253 x 20 x 43.7		⊕ rear disc brake
										94013100	ø 228,6 x 54		⊕ rear drum brake
2.5 24V	09/96→11/00	228600 125 / 170	Ate		2135803	[–] 21358 19.8	→12/97	Bos		2341007	[–] 23410 15.7		

→

MONDEO II Estate (BNP) 09/96→11/00

			kW / hp												
2.5 24V	09/96→11/00	228600	125 / 170	Ate		2139408	[–] 21394	18.5	12/97→	Bos		2341008	[+] 23410	15.7	
				Ate		2191003	[+] 21910	19.8	→12/97	Bos		82031600			
				Ate		2307104	[+] 23071	18.5	12/97→		PRO	92063603	ø 253 x 20 x 43.7		
				Ate		82032100									
				Ate		82062900									
						92075400	ø 278 x 24 x 47								
2.5 24V	10/99→11/00	228700	125 / 170	Ate		2139408	[–] 21394	18.5		Bos		2341007	[–] 23410	15.7	
2.5 ST 200	05/99→11/00		151 / 205	Ate		2307104	[+] 23071	18.5		Bos		2341008	[+] 23410	15.7	
				Ate		82032100				Bos		82031600			
				Ate		82062900					PRO	92063603	ø 253 x 20 x 43.7		
						92075400	ø 278 x 24 x 47								

MONDEO II Kombi (BNP) 09/96→11/00 → MONDEO II Estate (BNP), Page 398

MONDEO II Saloon (BFP) 09/96→11/00

1.6 i	09/96→11/00	228800	66 / 90	Ate		2139408	[–] 21394	18.5		Bos		2341007	[–] 23410	15.7	⊕ rear disc brake
1.8 i	09/96→11/00		85 / 115												
1.8 TD	09/96→11/00		66 / 90	Ate		2307104	[+] 23071	18.5		Bos		2341008	[+] 23410	15.7	⊕ rear disc brake
				Ate		82032100				Bos		82031600			⊕ rear disc brake
				Ate		82062900						91046600	ø 203.2 x 38.5		⊕ rear drum brake →12/97 12/97→ ⊖ D ⊖ A ⊖ CH
						92075400	ø 278 x 24 x 47		⊕ rim size 15"			91049400	ø 228.6 x 45		⊕ rear drum brake 12/97→ ⊕ D ⊕ A ⊕ CH
					PRO	92063503	ø 260 x 24 x 47		⊕ rim size 14"	Luc		97009100			⊕ rear drum brake →12/97 12/97→ ⊖ D ⊖ A ⊖ CH
										Luc		97009200			⊕ rear drum brake 12/97→ ⊕ D ⊕ A ⊕ CH
												84046600	bore ø 22.2 ø 203.2 x 36		⊕ rear drum brake →12/97 12/97→ ⊖ D ⊖ A ⊖ CH
												84049400	bore ø 20.6 ø 228.6 x 45		⊕ rear drum brake 12/97→ ⊕ D ⊕ A ⊕ CH
											PRO	92063603	ø 253 x 20 x 43.7		⊕ rear disc brake
												94013100	ø 228,6 x 54		⊕ rear drum brake 12/97→ ⊕ D ⊕ A ⊕ CH
												94015100	ø 203,0 x 48.5		⊕ rear drum brake →12/97 12/97→ ⊖ D ⊖ A ⊖ CH
1.6 i 16V	05/98→11/00	228900	70 / 95	Ate		2139408	[–] 21394	18.5		Bos		2341007	[–] 23410	15.7	⊕ rear disc brake
				Ate		2307104	[+] 23071	18.5		Bos		2341008	[+] 23410	15.7	⊕ rear disc brake
				Ate		82032100				Bos		82031600			⊕ rear disc brake
				Ate		82062900						91046600	ø 203.2 x 38.5		⊕ rear drum brake ⊖ D ⊖ A ⊖ CH
						92075400	ø 278 x 24 x 47		⊕ rim size 15"			91049400	ø 228.6 x 45		⊕ rear drum brake ⊕ D ⊕ A ⊕ CH
					PRO	92063503	ø 260 x 24 x 47		⊕ rim size 14"	Luc		97009100			⊕ rear drum brake ⊖ D ⊖ A ⊖ CH
										Luc		97009200			⊕ rear drum brake ⊕ D ⊕ A ⊕ CH
												84046600	bore ø 22.2 ø 203.2 x 36		⊕ rear drum brake ⊖ D ⊖ A ⊖ CH
												84049400	bore ø 20.6 ø 228.6 x 45		⊕ rear drum brake ⊕ D ⊕ A ⊕ CH
											PRO	92063603	ø 253 x 20 x 43.7		⊕ rear disc brake
												94013100	ø 228,6 x 54		⊕ rear drum brake ⊕ D ⊕ A ⊕ CH
												94015100	ø 203,0 x 48.5		⊕ rear drum brake ⊖ D ⊖ A ⊖ CH
2.0 i	09/96→11/00	229000	96 / 131	Ate		2139408	[–] 21394	18.5		Bos		2341007	[–] 23410	15.7	⊕ rear disc brake
				Ate		2307104	[+] 23071	18.5		Bos		2341008	[+] 23410	15.7	⊕ rear disc brake
				Ate		82032100				Bos		82031600			⊕ rear disc brake

		kW / hp											
MONDEO II Saloon (BFP) 09/96→11/00													
		229000	Ate		**82062900**					**91049400**	ø 228.6 x 45	⊕ rear drum brake
2.0 i	09/96→11/00	96 / 131			**92075400**	ø 278 x 24 x 47	⊕ rim size 15"	Luc		**97009200**		⊕ rear drum brake
				PRO	**92063503**	ø 260 x 24 x 47	⊕ rim size 14"			**84049401**	bore ø 22.2 ø 228.6 x 45	⊕ rear drum brake
									PRO	**92063603**	ø 253 x 20 x 43.7	⊕ rear disc brake
										94013100	ø 228,6 x 54	⊕ rear drum brake
		229100	Ate		**2135803**	[–] 21358 19.8	→12/97	Bos		**2341007**	[–] 23410 15.7	
2.5 24V	09/96→11/00	125 / 170	Ate		**2139408**	[–] 21394 18.5	12/97→	Bos		**2341008**	[+] 23410 15.7	
			Ate		**2191003**	[+] 21910 19.8	→12/97	Bos		**82031600**		
			Ate		**2307104**	[+] 23071 18.5	12/97→		PRO	**92063603**	ø 253 x 20 x 43.7	
			Ate		**82032100**							
			Ate		**82062900**							
					92075400	ø 278 x 24 x 47						
		229200	Ate		**2139408**	[–] 21394 18.5		Bos		**2341007**	[–] 23410 15.7	
2.5 24V	06/00→11/00	125 / 170	Ate		**2307104**	[+] 23071 18.5		Bos		**2341008**	[+] 23410 15.7	
			Ate		**82032100**			Bos		**82031600**		
			Ate		**82062900**				PRO	**92063603**	ø 253 x 20 x 43.7	
				PRO	**92063503**	ø 260 x 24 x 47						
		229300	Ate		**2139408**	[–] 21394 18.5		Bos		**2341007**	[–] 23410 15.7	
2.5 ST 200	05/99→11/00	151 / 205	Ate		**2307104**	[+] 23071 18.5		Bos		**2341008**	[+] 23410 15.7	
			Ate		**82032100**			Bos		**82031600**		
			Ate		**82062900**				PRO	**92063603**	ø 253 x 20 x 43.7	
					92075400	ø 278 x 24 x 47						
MONDEO II Stufenheck (BFP) 09/96→11/00 → MONDEO II Saloon (BFP), Page 399													
MONDEO III (B5Y) 11/00→08/07													
		229400	Bos		**2327904**	[–] 23279 18.4		Bos		**2426001**	[–] 24260 16.3	09/04→
1.8 16V	11/00→08/07	81 / 110										
1.8 16V	11/00→08/07	92 / 125	Bos		**82063800**			Bos		**2355701**	[–] 23557 17.2	→08/04
1.8 SCi	06/03→08/07	96 / 130										
2.0 16V	11/00→08/07	107 / 146	Bos		**82510100**			Bos		**82054300**		
2.0 16V DI / TDDi / TDCi	11/00→08/07	66 / 90										
2.0 16V TDDi / TDCi	11/00→08/07	85 / 115										
2.0 TDCi	10/01→08/07	96 / 130		PRO	**92109603**	ø 300 x 24 x 47			PRO	**92109703**	ø 280 x 12 x 34	
2.0 TDCi	02/03→06/05	92 / 125										
2.5 V6 24V	11/00→08/07	125 / 170										
ST220	04/02→08/07	166 / 226										
		229500	Bos		**2327904**	[–] 23279 18.4		Bos		**2426001**	[–] 24260 16.3	
2.2 TDCi	09/04→08/07	110 / 150										
3.0 V6 24V	09/04→08/07	150 / 204	Bos		**82063800**			Bos		**82054300**		
			Bos		**82510100**				PRO	**92109703**	ø 280 x 12 x 34	
				PRO	**92109603**	ø 300 x 24 x 47						
		229600	Bos		**2327904**	[–] 23279 18.4		Bos		**2426001**	[–] 24260 16.3	10/04→
2.2 TDCi	09/04→08/07	114 / 155	Bos		**82063800**			Bos		**2355701**	[–] 23557 17.2	→09/04
			Bos		**82510100**			Bos		**82054300**		
				PRO	**92109603**	ø 300 x 24 x 47			PRO	**92109703**	ø 280 x 12 x 34	
MONDEO III Clipper (BWY) 11/00→08/07 → MONDEO III Estate (BWY), Page 400													
MONDEO III Estate (BWY) 11/00→08/07													
		229700	Bos		**2327904**	[–] 23279 18.4		Bos		**2426001**	[–] 24260 16.3	09/04→
1.8 16V	11/00→08/07	81 / 110										
1.8 16V	11/00→08/07	92 / 125	Bos		**82063800**			Bos		**2355701**	[–] 23557 17.2	→08/04
1.8 SCi	06/03→08/07	96 / 130										
2.0 16V	11/00→08/07	107 / 146	Bos		**82510100**			Bos		**82054300**		
2.0 16V DI / TDDi / TDCi	11/00→08/07	66 / 90										
2.0 16V TDDi / TDCi	11/00→08/07	85 / 115										

→

		kW / hp											
MONDEO III Estate (BWY) 11/00→08/07													
2.0 TDCi	10/01→08/07	96 / 130		PRO	92109603	ø 300 x 24 x 47			PRO	92109703	ø 280 x 12 x 34	
2.5 V6 24V	11/00→08/07	125 / 170										
ST220	04/02→08/07	166 / 226										
		229800	Bos		2327904	[–] 23279 18.4		Bos		2426001	[–] 24260 16.3	
2.2 TDCi	09/04→08/07	110 / 150										
2.2 TDCi	09/04→08/07	114 / 155	Bos		82063800			Bos		82054300		
3.0 V6 24V	09/04→08/07	150 / 204										
			Bos		82510100				PRO	92109703	ø 280 x 12 x 34	
				PRO	92109603	ø 300 x 24 x 47						
MONDEO III Kombi (BWY) 11/00→08/07 → MONDEO III Estate (BWY), Page 400													
MONDEO III Saloon (B4Y) 10/00→08/07													
		229900	Bos		2327904	[–] 23279 18.4		Bos		2426001	[–] 24260 16.3	09/04→
1.8 16V	11/00→08/07	81 / 110										
1.8 16V	11/00→08/07	92 / 125	Bos		82063800			Bos		2355701	[–] 23557 17.2	→08/04
1.8 SCi	06/03→08/07	96 / 130										
2.0 16V	11/00→08/07	107 / 146	Bos		82510100			Bos		82054300		
2.0 16V DI / TDDi / TDCi	11/00→08/07	66 / 90										
2.0 16V TDDi / TDCi	11/00→08/07	85 / 115		PRO	92109603	ø 300 x 24 x 47			PRO	92109703	ø 280 x 12 x 34	
2.0 TDCi	10/01→08/07	96 / 130										
2.0 TDCi	02/03→06/05	92 / 125										
2.5 V6 24V	11/00→08/07	125 / 170										
ST220	04/02→08/07	166 / 226										
		230000	Bos		2327904	[–] 23279 18.4		Bos		2426001	[–] 24260 16.3	
2.2 TDCi	09/04→08/07	110 / 150										
2.2 TDCi	09/04→08/07	114 / 155	Bos		82063800			Bos		82054300		
3.0 V6 24V	09/04→08/07	150 / 204										
			Bos		82510100				PRO	92109703	ø 280 x 12 x 34	
				PRO	92109603	ø 300 x 24 x 47						
		230100	Bos		2327904	[–] 23279 18.4		Bos		2355701	[–] 23557 17.2	
2.5 V6	10/00→03/07	125 / 170										
MONDEO III Stufenheck (B4Y) 10/00→08/07 → MONDEO III Saloon (B4Y), Page 401													
MONDEO IV (BA7) 03/07→ → MONDEO IV, Page 401													
MONDEO IV 03/07→													
		230200	Ate		2412301	[–] 24123 20.3		TRW		2453703	[–] 24537 15.7	
1.6 EcoBoost	02/11→	118 / 160										
1.6 TDCi	02/11→	85 / 115	Ate		82039300			Luc		82073200		
1.6 Ti	03/07→	81 / 110										
1.6 Ti	03/07→	92 / 125	Ate		82062900			Luc		82063300		
1.6 Ti	07/10→	88 / 120										
1.8 TDCi	03/07→	74 / 100		PRO	92196903	ø 300 x 28 x 52				92159300	ø 302 x 11 x 50.8	
1.8 TDCi	06/07→	92 / 125							PRO	92159303	ø 302 x 11 x 50.8	
2.0	03/07→	107 / 145										
2.0 EcoBoost	07/10→	176 / 240										
2.0 Flexifuel	03/09→	107 / 145										
2.0 LPG	07/09→	107 / 145										
2.0 SCTi	03/10→	149 / 203										
2.0 TDCi	03/07→	96 / 130										
2.0 TDCi	03/07→	100 / 136										
2.0 TDCi	03/07→	103 / 140										
2.0 TDCi	11/07→	85 / 115										
2.0 TDCi	03/10→	120 / 163										
2.2 TDCi	03/08→	129 / 175										
2.2 TDCi	07/10→	147 / 200										
2.3	07/07→	118 / 160										
2.5	03/07→	162 / 220										
MONDEO IV Saloon (BA7) 03/07→													
		230300	Ate		2412301	[–] 24123 20.3		TRW		2453703	[–] 24537 15.7	
1.6 TDCi	12/10→	85 / 115										
1.6 Ti	03/07→	81 / 110	Ate		82039300			Luc		82073200		
1.6 Ti	03/07→	92 / 125										
1.8 TDCi	03/07→	74 / 100	Ate		82062900			Luc		82063300		
1.8 TDCi	06/07→	92 / 125										
2.0	03/07→	107 / 145		PRO	92196903	ø 300 x 28 x 52				92159300	ø 302 x 11 x 50.8	
2.0 Flexifuel	03/09→	107 / 145							PRO	92159303	ø 302 x 11 x 50.8	
2.0 LPG	07/09→	107 / 145										
2.0 TDCi	03/07→	96 / 130										
2.0 TDCi	03/07→	103 / 140										
2.0 TDCi	11/07→	85 / 115										
2.0 TDCi	03/10→	120 / 163										
2.2 TDCi	03/08→	129 / 175										
2.3	07/07→	118 / 160										
2.5	03/07→	162 / 220										
MONDEO IV Stufenheck (BA7) 03/07→ → MONDEO IV Saloon (BA7), Page 401													
MONDEO IV Turnier (BA7) 03/07→ → MONDEO IV Turnier, Page 401													
MONDEO IV Turnier 03/07→													
		230400	Ate		2412301	[–] 24123 20.3		TRW		2453703	[–] 24537 15.7	
1.6 EcoBoost	02/11→	118 / 160										
1.6 TDCi	02/11→	85 / 115	Ate		82039300			Luc		82073200		
1.6 Ti	03/07→	81 / 110										
1.6 Ti	03/07→	92 / 125	Ate		82062900			Luc		82063300		
1.6 Ti	07/10→	88 / 120										
1.8 TDCi	03/07→	74 / 100		PRO	92196903	ø 300 x 28 x 52				92159300	ø 302 x 11 x 50.8	
1.8 TDCi	06/07→	92 / 125										
2.0	03/07→	107 / 145										
2.0 EcoBoost	07/10→	176 / 240										

F - H

30 kW / hp												
MONDEO IV Turnier 03/07→												
2.0 Flexifuel	03/09→	107 / 145							PRO	92159303	ø 302 x 11 x 50.8	
2.0 LPG	07/09→	107 / 145										
2.0 SCTi	03/10→	149 / 203										
2.0 TDCi	03/07→	96 / 130										
2.0 TDCi	03/07→	100 / 136										
2.0 TDCi	03/07→	103 / 140										
2.0 TDCi	11/07→	85 / 115										
2.0 TDCi	03/10→	120 / 163										
2.2 TDCi	03/08→	129 / 175										
2.2 TDCi	07/10→	147 / 200										
2.3	07/07→	118 / 160										
2.5	03/07→	162 / 220										
MONDEO Mk II (BAP) 09/96→11/00 → MONDEO II (BAP), Page 397												
MONDEO Mk II Estate (BNP) 09/96→11/00 → MONDEO II Estate (BNP), Page 398												
MONDEO Mk II Kombi (BNP) 09/96→11/00 → MONDEO II Estate (BNP), Page 398												
MONDEO Mk II Saloon (BFP) 09/96→11/00 → MONDEO II Saloon (BFP), Page 399												
MONDEO Mk II Stufenheck (BFP) 09/96→11/00 → MONDEO II Saloon (BFP), Page 399												
MONDEO Mk III (B5Y) 11/00→08/07 → MONDEO III (B5Y), Page 400												
MONDEO Mk III Estate (BWY) 11/00→08/07 → MONDEO III Estate (BWY), Page 400												
MONDEO Mk III Kombi (BWY) 11/00→08/07 → MONDEO III Estate (BWY), Page 400												
MONDEO Mk III Saloon (B4Y) 10/00→08/07 → MONDEO III Saloon (B4Y), Page 401												
MONDEO Mk III Stufenheck (B4Y) 10/00→08/07 → MONDEO III Saloon (B4Y), Page 401												
PUMA (EC_) 03/97→06/02												
		230500	Ate		2310301	[–] 23103 17.5	→02/00		Luc	91048800	ø 180 x 32	→02/00
1.4 16V	11/97→10/00	66 / 90										
1.7 16V	03/97→06/02	92 / 125	Ate		2360406	[–] 23604 18.8	02/00→		Lkh	91057300	ø 203.2 x 38	02/00→
ST 160	06/99→06/02	118 / 160										
			Ate		82029200				Luc	97010200		→02/00
			Ate		82062900				Lkh	97015500		02/00→
				PRO	92051003	ø 239.5 x 20 x 43	→02/00		Luc	84048800	bore ø 17.5 ø 180 x 32	→02/00
				PRO	92096203	ø 258 x 22 x 43.5	02/00→		Lkh	84057300	bore ø 19 ø 203.2 x 38	02/00→
										94018500	ø 180,0 x 44	→02/00
										94019000	ø 203,0 x 49	02/00→
		230600	Ate		2360406	[–] 23604 18.8			Bos	91053700	ø 180 x 42	
1.6 16V	08/00→06/02	76 / 103										
			Ate		82029200				Lkh	97015500		
			Ate		82062900				Lkh	84057300	bore ø 19 ø 203.2 x 38	
				PRO	92096203	ø 258 x 22 x 43.5				94019000	ø 203,0 x 49	
		230700	Ate		2087702	[o] 20877 17.5			Luc	2335301	[–] 23353 14	
Tickford Special	10/99→12/00	114 / 155										
RANGER (ER, EQ) 09/98→06/06												
		230800	Kel		2354001	[+] 23540 16.5						
1.8	06/99→02/02	85 / 116										
3.0	06/99→06/06	109 / 148			92136200	ø 256 x 24 x 24						
		230900	Kel		2354001	[+] 23540 16.5				94033500	ø 270 x 67.5	
2.2	03/02→09/05	78 / 106										
2.5	09/98→09/03	89 / 121			92136200	ø 256 x 24 x 24						
2.5 D	09/98→04/02	77 / 105										
2.5 D	10/99→04/02	57 / 78										
2.5 TD	04/02→06/06	62 / 84										
2.5 TDdi	04/02→09/05	86 / 117										
2.6	10/02→09/04	80 / 109										
		231000	Kel		2354001	[+] 23540 16.5						
2.3	10/01→09/05	114 / 155										
2.3	10/05→06/06	105 / 143										
2.9 D	06/99→02/02	70 / 95										
4.0	10/05→06/06	152 / 207										
		231100	Kel		2354001	[+] 23540 16.5	→08/02			91063700	ø 295 x 56	
2.3 4x4	10/01→09/05	114 / 155										
			Tok		2435301	[+] 24353 16.9	08/02→					
			Kel		82511700		08/02→					
		231200	Kel		2354001	[+] 23540 16.5	→MY 2002			91063700	ø 295 x 56	
2.5 D 4x4	10/99→04/02	57 / 78										
2.5 TD 4x4	10/99→06/06	80 / 109	Tok		2435301	[+] 24353 16.9	MY 2002→			94035400	ø 295,0 x 67.8	
			Kel		82511700		MY 2002→					

→

RANGER (ER, EQ) 09/98→06/06

		kW / hp											
231200													
2.5 D 4x4	10/99→04/02	57 / 78		92136300	ø 274 x 24 x 24	→061001							
2.5 TD 4x4	10/99→06/06	80 / 109		92223000	ø 288 x 28 x 70	061001→							
			PRO	92223003	ø 288 x 28 x 70	061001→							
231300			Tok	2435301	[+] 24353 16.9				91063700	ø 295 x 56			
2.5 TD 4x4	04/02→06/06	62 / 84	Kel	82511700					94035400	ø 295,0 x 67.8			
2.5 TDdi 4x4	04/02→09/05	86 / 117		92136300	ø 274 x 24 x 24	→061001							
				92223000	ø 288 x 28 x 70	061001→							
			PRO	92223003	ø 288 x 28 x 70	061001→							
231400			Tok	2435301	[+] 24353 16.9				91063700	ø 295 x 56			
3.0 4x4	06/99→06/06	109 / 148	Kel	82511700									
4.0 4x4	10/05→06/06	152 / 207											

RANGER (ES, ET) 05/06→

231500			Tok	2435301	[+] 24353 16.9								
2.5 TDCi 4x4	05/06→	105 / 143											
3.0 TDCi 4x4	05/06→	115 / 156	Kel	82511700									
231600			Kel	2354001	[+] 23540 16.5				91075700	ø 254 x 65			
2.5 TDdi	05/06→	105 / 143											
3.0 TDCi	05/06→	115 / 156	Kel	82511700									
				92136200	ø 256 x 24 x 24								

RANGER (TKE) 04/11→

231700				2563201	[+] 25632 16.4								
2.2 TDCi	04/11→	88 / 120											
2.2 TDCi	04/11→	92 / 125	PRO	92253403	ø 302 x 32 x 61	→04/12							
2.2 TDCi 4x4	04/11→	92 / 125											
2.2 TDCi 4x4	04/11→	110 / 150											
2.5 i 4x4	11/11→	122 / 166											
3.2 TDCi 4x4	04/11→	147 / 200											

S-MAX (WA6) 05/06→ → S-MAX, Page 403

S-MAX 05/06→

231800			Ate	2412301	[–] 24123 20.3				TRW	2449602	[–] 24496 16.9	⊕ elect. handbr.	
1.6 EcoBoost	02/11→	118 / 160											
1.6 TDCi	02/11→	85 / 115	Ate	82039300					TRW	2453703	[–] 24537 15.7	⊖ elect. handbr.	
1.8 TDCi	05/06→	92 / 125											
1.8 TDCi	01/07→	74 / 100	Ate	82062900					Luc	82073200		⊖ elect. handbr.	
2.0	05/06→	107 / 145											
2.0 Flexifuel	05/06→	107 / 145		92159200	ø 300 x 28 x 52				Luc	82073800		⊕ elect. handbr.	
2.0 TDCi	05/06→	96 / 130											
2.0 TDCi	05/06→	100 / 136	PRO	92159203	ø 300 x 28 x 52				Luc	82063300			
2.0 TDCi	05/06→	103 / 140											
2.0 TDCi	11/07→	85 / 115								92159300	ø 302 x 11 x 50.8		
2.0 TDCi	03/10→	120 / 163											
2.3	07/07→	118 / 160							PRO	92159303	ø 302 x 11 x 50.8		
231900			Ate	2414201	[–] 24142 19.8				TRW	2449602	[–] 24496 16.9	⊕ elect. handbr.	
2.0 EcoBoost	03/10→	149 / 203											
2.0 EcoBoost	07/10→	176 / 240	Ate	82062900					TRW	2453703	[–] 24537 15.7	⊖ elect. handbr.	
2.5 ST	05/06→	162 / 220											
			Ate	82515500					Luc	82073200		⊖ elect. handbr.	
				92162300	ø 316 x 28 x 52				Luc	82073800		⊕ elect. handbr.	
			PRO	92162303	ø 316 x 28 x 52				Luc	82063300			
										92159300	ø 302 x 11 x 50.8		
									PRO	92159303	ø 302 x 11 x 50.8		
232000			Ate	2412301	[–] 24123 20.3	05/11→			TRW	2449602	[–] 24496 16.9	⊕ elect. handbr.	
2.0 EcoBoost	07/10→	146 / 199	Ate	2414201	[–] 24142 19.8	→05/11			TRW	2453703	[–] 24537 15.7	⊖ elect. handbr.	
			Ate	82039300		07/11→				92159300	ø 302 x 11 x 50.8		
			Ate	82515500		→07/11			PRO	92159303	ø 302 x 11 x 50.8		
				92159200	ø 300 x 28 x 52	05/11→							

F - H

S-MAX 05/06→

		kW / hp										
232000												
2.0 EcoBoost	07/10→	146 / 199		92162300	ø 316 x 28 x 52	→05/11						
			PRO	92159203	ø 300 x 28 x 52	05/11→						
			PRO	92162303	ø 316 x 28 x 52	→05/11						
232100												
2.2 TDCi	03/08→	129 / 175	Ate	2412301	[–] 24123 20.3	2008-10-10→	TRW	2449602	[–] 24496 16.9	⊕ elect. handbr.		
			Ate	2414201	[–] 24142 19.8	→2008-10-10	TRW	2453703	[–] 24537 15.7	⊖ elect. handbr.		
			Ate	82062900			Luc	82073200		⊖ elect. handbr.		
			Ate	82515500			Luc	82073800		⊕ elect. handbr.		
				92159200	ø 300 x 28 x 52	2008-10-10→	Luc	82063300				
				92162300	ø 316 x 28 x 52	→2008-10-10		92159300	ø 302 x 11 x 50.8			
			PRO	92159203	ø 300 x 28 x 52	2008-10-10→	PRO	92159303	ø 302 x 11 x 50.8			
			PRO	92162303	ø 316 x 28 x 52	→2008-10-10						
232200												
2.2 TDCi	07/10→	147 / 200	Ate	2412301	[–] 24123 20.3		TRW	2449602	[–] 24496 16.9	⊕ elect. handbr.		
			Ate	82062900			TRW	2453703	[–] 24537 15.7	⊖ elect. handbr.		
			Ate	82515500			Luc	82073200		⊖ elect. handbr.		
				92159200	ø 300 x 28 x 52	2008-10-10→	Luc	82073800		⊕ elect. handbr.		
				92162300	ø 316 x 28 x 52	→2008-10-10	Luc	82063300				
			PRO	92159203	ø 300 x 28 x 52	2008-10-10→		92159300	ø 302 x 11 x 50.8			
			PRO	92162303	ø 316 x 28 x 52	→2008-10-10	PRO	92159303	ø 302 x 11 x 50.8			

STREET KA (RL2) 05/03→07/05 → STREET KA, Page 404

STREET KA 05/03→07/05

232300												
1.6	05/03→07/05	70 / 95	Ate	2360406	[–] 23604 18.8		Lkh	91057300	ø 203.2 x 38			
			Ate	82029200			Lkh	97015500				
			Ate	82062900			Lkh	84057301	bore ø 19 ø 203.2 x 38			
			PRO	92096203	ø 258 x 22 x 43.5			94019000	ø 203,0 x 49			

TERRITORY Closed Off-Road Vehicle 04/03→01/11

232400				2482901	[–] 24829 14.7							
4.0	04/03→01/11	182 / 248										
4.0	05/04→01/11	190 / 258										
4.0 4WD	05/04→09/05	182 / 248										
4.0 LPG	04/03→01/11	182 / 248										
232500			PBR	2419401	[+] 24194 15.3							
4.0	07/06→01/11	245 / 333										

TERRITORY Geländewagen geschlossen 04/03→01/11
→ TERRITORY Closed Off-Road Vehicle, Page 404

TOURNEO CONNECT 06/02→

232600			Ate	2344004	[–] 23440 17.6		Ate	2413701	[–] 24137 16.7	⊕ ABS		
1.8 16V	06/02→	85 / 116										
1.8 Di	06/02→	55 / 75										
1.8 TDCi	08/06→	81 / 110	Ate	82062900			Ate	2413781 epad	[–] 24137 16.7	⊕ ABS		
1.8 Turbo Di	06/02→	66 / 90	Ate	82071800			Ate	82062900		⊕ ABS		
				92124800	ø 278 x 24 x 44.5		Ate	82503500		⊕ ABS		
							Lkh	91061400	ø 228.6 x 57	⊖ ABS		
							Lkh	97030900		⊖ ABS		
							Lkh	84061400	bore ø 20.6 ø 228.6 x 57	⊖ ABS		
								92124900	ø 278 x 11 x 53.7	⊕ ABS		
								94024400	ø 228,5 x 67.5	⊖ ABS		

TOURNEO CONNECT Kombi 09/13→

232700			Ate	2574801	[–] 25748 18.2		Ate	2521201	[–] 25212 16.1			
1.0 EcoBoost	11/13→	74 / 100										
1.6 EcoBoost	11/13→	110 / 150										

→

		kW / hp										
TOURNEO CONNECT Kombi 09/13→												
1.6 TDCi	09/13→	55 / 75	Ate		82032000			Ate		2521281	[–] 25212 16.1	
1.6 TDCi	09/13→	70 / 95		PRO	92141303	ø 300 x 25 x 48.5	⊕ rim size 17"	Ate		82503500		
1.6 TDCi	09/13→	85 / 115							PRO	92238903	ø 279.8 x 11 x 50.8	⊕ rim size 17"
TOURNEO COURIER Kombi 02/14→												
		232800	TRW		2513402	[–] 25134 16.7						
1.0 EcoBoost	02/14→	74 / 101										
1.5 TDCi	02/14→	55 / 75										
1.6 TDCi	02/14→	70 / 95										
TOURNEO CUSTOM Bus 12/12→												
		232900	TRW		2560201	[+] 25602 17		TRW		2560301	[o] 25603 17.8	
2.2 TDCi	12/12→	74 / 100										
2.2 TDCi	12/12→	92 / 125										
2.2 TDCi	12/12→	114 / 155			93260600	ø 288 x 55.5	⊖ 330		ABS	93260700	ø 288 x 68.8	⊖ 330
TRANSIT Box (E_ _) 06/94→03/00												
		233000	Ben		2146901	[–] 21469 19	⊕ rim size 15" →08/98			91044100	ø 254 x 52	→07/94
2.0 (EAL, EAS)	06/94→03/00	84 / 114	Ben		2147001	[–] 21470 19	⊕ rim size 14" →08/98			91044201	ø 280 x 65	→07/94
2.5 DI (EAL, EAS)	06/94→03/00	51 / 69	Ben		2146902	[+] 21469 19	⊕ rim size 15" 09/98→			91048500	ø 254 x 52	08/94→
2.5 DI (EAL, EAS)	06/94→03/00	56 / 76	Ben		2147002	[+] 21470 19	⊕ rim size 14" 09/98→			91048600	ø 280 x 65	08/94→
2.5 TD (EAL, EAS)	06/94→03/00	63 / 85			92088100	ø 254 x 24 x 43	⊕ rim size 14"	Lkh		97007800		Ø 254 mm
2.5 TDI (EAL, EAS)	06/94→03/00	74 / 101			92088200	ø 270 x 24.5 x 43	⊕ rim size 15"	Lkh		97007900		Ø 280 mm
										83048500	bore ø 22.2 ø 254 x 52	08/94→
										83048601	bore ø 20.6 ø 280 x 65	08/94→
										83048602	bore ø 25.4 ø 280 x 65	08/94→
										84044100	bore ø 22.2 ø 254 x 52	→07/94
										84044101	bore ø 20.6 ø 254 x 52	→07/94
										84044201	bore ø 20.6 ø 280 x 65	→07/94
										84044202	bore ø 25.4 ø 280 x 65	→07/94
										94013200	ø 254,0 x 57.5	Ø 254 mm
										94013300	ø 280,0 x 75.5	Ø 280 mm
		233100	Ben		2146902	[+] 21469 19	⊕ rim size 15"			91048500	ø 254 x 52	
2.5 DI (EAL, EAS)	05/99→03/00	85 / 116	Ben		2147002	[+] 21470 19	⊕ rim size 14"			91048600	ø 280 x 65	
2.5 TD (EAS)	10/98→03/00	55 / 75			92088100	ø 254 x 24 x 43	⊕ rim size 14"	Lkh		97007800		Ø 254 mm
					92088200	ø 270 x 24.5 x 43	⊕ rim size 15"	Lkh		97007900		Ø 280 mm
										83048500	bore ø 22.2 ø 254 x 52	
										83048601	bore ø 20.6 ø 280 x 65	
										83048602	bore ø 25.4 ø 280 x 65	
										94013200	ø 254,0 x 57.5	Ø 254 mm
										94013300	ø 280,0 x 75.5	Ø 280 mm
TRANSIT Box (FA_ _) 01/00→05/06												
		233200	Bos		2343401	[+] 23434 17.7	BM 260 / 280 / 300			91058600	ø 280 x 65	BM 330 / 350
2.0	09/00→03/06	84 / 114	Bos		2357701	[+] 23577 18.5	BM 330 / 350			91059100	ø 254 x 52	BM 260 / 280 / 300
2.0 DI (FAE_, FAF_, FAG_)	08/00→05/06	55 / 75	Bos		82063900					97012200		
2.0 DI (FAE_, FAF_, FAG_)	08/00→05/06	63 / 86		PRO	92103803	ø 294 x 24.5 x 43	BM 330 / 350			84058600	bore ø 25.4 ø 280 x 65	BM 330 / 350
2.0 DI (FAE_, FAF_, FAG_)	08/00→05/06	74 / 100		PRO	92110003	ø 276 x 24.5 x 43	BM 260 / 280 / 300			84059100	bore ø 25.4 ø 254 x 52	BM 260 / 280 / 300
2.0 TDCi	08/02→05/06	92 / 125								94024600	ø 280 x 80.5	BM 330 / 350
2.3	03/01→03/06	105 / 143										
2.3	03/01→03/06	107 / 145										
2.4 TD	08/00→08/03	55 / 75										
2.4 TDdi	08/00→08/03	88 / 120										

F - H

30	kW / hp											
TRANSIT Box (FA_ _) 01/00→05/06												
	233200											
2.0	09/00→03/06	84 / 114										
2.0 DI (FAE_, FAF_, FAG_)	08/00→05/06	55 / 75										
2.0 DI (FAE_, FAF_, FAG_)	08/00→05/06	63 / 86										
2.0 DI (FAE_, FAF_, FAG_)	08/00→05/06	74 / 100										
2.0 TDCi	08/02→05/06	92 / 125										
2.3	03/01→03/06	105 / 143										
2.3	03/01→03/06	107 / 145										
2.4 TD	08/00→08/03	55 / 75										
2.4 TDdi	08/00→08/03	88 / 120										
	233300		Bos		2357701	[+] 23577 18.5				91058600	ø 280 x 65	
2.3 16V [RWD] (FAA_, FAB_, FAC_)	04/01→05/06	107 / 146										
2.4 DI (FAA_, FAB_, FAC_, FAD_)	01/00→05/06	66 / 90	Bos		82063900					97012200		
2.4 DI [RWD] (FAA_, FAB_, FAC_, FAD_)	01/00→05/06	55 / 75		PRO	92103803	ø 294 x 24.5 x 43				84058600	bore ø 25.4 ø 280 x 65	
2.4 DI [RWD] (FAA_, FAB_, FAC_, FAD_)	01/00→05/06	88 / 120								94024600	ø 280 x 80.5	⊕ single tyre
2.4 TD All-wheel Drive	08/00→08/03	55 / 75										
2.4 TDCi	03/04→05/06	101 / 137								94024800	ø 280 x 75.5	⊕ dual tyres
2.4 TDE	07/01→05/06	92 / 125										
2.4 TDE	03/04→05/06	85 / 115										
TRANSIT Box 04/06→												
	233400		Bos		2448401	[+] 24484 18.9	BM 330 / 350	Bos		2448601	[+] 24486 17.3	⊕ rear disc brake BM 260/280/300/330/350
2.2 TDCi	04/06→	63 / 85										
2.2 TDCi	04/06→	81 / 110	Bos		2448501	[+] 24485 18.9	BM 260 / 280 / 300	Bre		2912307	[+] 29123 20.3	⊕ rear disc brake BM 460
2.2 TDCi	04/06→	96 / 130										
2.2 TDCi	10/07→	103 / 140										
2.2 TDCi	10/08→	85 / 115	Bos		82054200			Bos		82054300		⊕ rear disc brake BM 260/280/300/330/350
2.2 TDCi	10/11→	74 / 100										
2.2 TDCi	10/11→	92 / 125		PRO	92151803	ø 280 x 28 x 54.4	BM 260 / 280 / 300			91059100	ø 254 x 52	⊕ rear drum brake BM 260 / 280 / 300
				PRO	92151903	ø 300 x 28 x 54.4	BM 330 / 350			97012200		⊕ rear drum brake BM 260 / 280 / 300
										84059100	bore ø 25.4 ø 254 x 52	⊕ rear drum brake BM 260 / 280 / 300
									ABS	92159100	ø 280 x 16 x 69	⊕ rear disc brake
										94024700	ø 254 x 57.5	⊕ rear drum brake BM 260 / 280 / 300
	233500		Bos		2448401	[+] 24484 18.9		Bos		2448601	[+] 24486 17.3	BM 260/280/300/330/350
2.2 TDCi [RWD]	10/11→	74 / 100										
2.2 TDCi [RWD]	10/11→	92 / 125	Bos		82054200			Bre		2912307	[+] 29123 20.3	BM 460
2.2 TDCi [RWD]	10/11→	114 / 155										
2.4 TDCi	04/06→	74 / 100										
2.4 TDCi	04/06→	85 / 115			92231500	ø 300 x 28 x 54.4	BM 350 ⊕ incr. payload ⊕ dual tyres	Bos		82054300		BM 260/280/300/330/350
2.4 TDCi	04/06→	103 / 140										
3.2 TDCi	09/07→	147 / 200		PRO	92151903	ø 300 x 28 x 54.4				92152000	ø 280 x 16 x 16.3	
	233600		Bos		2448401	[+] 24484 18.9		Bos		2448601	[+] 24486 17.3	BM 260/280/300/330/350
2.2 TDCi 4x4	10/11→	92 / 125										
2.4 TDCi 4x4	11/06→	103 / 140	Bos		82054200			Bre		2912307	[+] 29123 20.3	BM 460
				PRO	92151903	ø 300 x 28 x 54.4		Bos		82054300		BM 260/280/300/330/350
										92152000	ø 280 x 16 x 16.3	
	233700		Bos		2448401	[+] 24484 18.9		Bre		2912307	[+] 29123 20.3	
2.3 16V	04/06→	107 / 145										
			Bos		82054200					93242500	ø 284 x 16 x 43.9	
					92231500	ø 300 x 28 x 54.4	BM 350 ⊕ incr. payload ⊕ dual tyres					
					92231500	ø 300 x 28 x 54.4						
TRANSIT Bus (E_ _) 06/94→06/00												
	233800		Ben		2146901	[–] 21469 19	⊕ rim size 15" →08/98			91048500	ø 254 x 52	
2.0 (EBL, EBS, ECL, EDS, EDL, EGL, ESS, ESL, EUS)	09/95→03/00	84 / 114										
2.5 DI (EBL, EDL, EDS, ESL, ESS)	08/97→03/00	85 / 116	Ben		2147001	[–] 21470 19	⊕ rim size 14" →08/98			91048600	ø 280 x 65	
2.5 DI (EBL, EDS, ESL, ESS, EUS)	08/94→03/00	51 / 69	Ben		2146902	[+] 21469 19	⊕ rim size 15" 09/98→	Lkh		97007800		Ø 254 mm
2.5 TD (EB_, ED_, ES_)	08/94→06/00	55 / 75										
2.5 TD (EBL, EDL, EDS, EGL, ESL, ESS, EUS)	01/95→03/00	63 / 85	Ben		2147002	[+] 21470 19	⊕ rim size 14" 09/98→	Lkh		97007900		Ø 280 mm
					92088100	ø 254 x 24 x 43	⊕ rim size 14"			83048500	bore ø 22.2 ø 254 x 52	
					92088200	ø 270 x 24.5 x 43	⊕ rim size 15"			83048601	bore ø 20.6 ø 280 x 65	
										83048602	bore ø 25.4 ø 280 x 65	
										94013200	ø 254,0 x 57.5	Ø 254 mm
										94013300	ø 280,0 x 75.5	Ø 280 mm

→

TRANSIT Bus (E_ _) 06/94→06/00

		kW / hp											
		233900											
2.0 CNG	06/94→03/00	84 / 114	Ben		2146901	[–] 21469 19	⊕ rim size 15" →08/98			91044100	ø 254 x 52	→07/94
2.5 DI (EBL, ECL, EDS, EDL)	07/94→03/00	56 / 76	Ben		2147001	[–] 21470 19	⊕ rim size 14" →08/98			91044201	ø 280 x 65	→07/94
2.5 TD (ECL, EDL, EDS, ESL, ESS, EUS)	07/94→03/00	74 / 100	Ben		2146902	[+] 21469 19	⊕ rim size 15" 09/98→			91048500	ø 254 x 52	08/94→
			Ben		2147002	[+] 21470 19	⊕ rim size 14" 09/98→			91048600	ø 280 x 65	08/94→
					92088100	ø 254 x 24 x 43	⊕ rim size 14"	Lkh		97007800		Ø 254 mm
					92088200	ø 270 x 24.5 x 43	⊕ rim size 15"	Lkh		97007900		Ø 280 mm
										83048500	bore ø 22.2 ø 254 x 52	08/94→
										83048601	bore ø 20.6 ø 280 x 65	08/94→
										83048602	bore ø 25.4 ø 280 x 65	08/94→
										84044100	bore ø 22.2 ø 254 x 52	→07/94
										84044101	bore ø 20.6 ø 254 x 52	→07/94
										84044201	bore ø 20.6 ø 280 x 65	→07/94
										84044202	bore ø 25.4 ø 280 x 65	→07/94
										94013200	ø 254,0 x 57.5	Ø 254 mm
										94013300	ø 280,0 x 75.5	Ø 280 mm

TRANSIT Bus (FD_ _, FB_ _, FS_ _, FZ_ _, FC_ _) 01/00→05/06

		234000											
2.0	09/00→03/06	84 / 114	Bos		2343401	[+] 23434 17.7	BM 260 / 280 / 300			91058600	ø 280 x 65	BM 330 / 350
2.0 DI (F_E_, F_F_, F_G_)	08/00→05/06	55 / 75	Bos		2357701	[+] 23577 18.5	BM 330 / 350			91059100	ø 254 x 52	BM 260 / 280 / 300
2.0 DI (F_E_, F_F_, F_G_)	08/00→05/06	63 / 86										
2.0 DI (F_E_, F_F_, F_G_)	08/00→05/06	74 / 100	Bos		82063900					97012200		
2.0 TDCi (F_F_, F_E_, F_G_)	08/02→05/06	92 / 125		PRO	92103803	ø 294 x 24.5 x 43	BM 330 / 350			84058600	bore ø 25.4 ø 280 x 65	BM 330 / 350
2.3	08/00→03/06	107 / 145		PRO	92110003	ø 276 x 24.5 x 43	BM 260 / 280 / 300			84059100	bore ø 25.4 ø 254 x 52	BM 260 / 280 / 300
2.4 TD	08/00→08/03	55 / 75								94024600	ø 280 x 80.5	BM 330 / 350
2.4 TDdi	08/00→08/03	88 / 120								94024700	ø 254 x 57.5	BM 260 / 280 / 300
2.4 TDdi	10/01→03/06	66 / 90										
		234100	Bos		2357701	[+] 23577 18.5				91058600	ø 280 x 65	
2.3 16V (RWD) (F_B_, F_C_, F_A_)	08/00→05/06	107 / 146	Bos		82063900					97012200		
2.4 DI (F_B_, F_C_, F_A_)	01/00→05/06	66 / 90		PRO	92103803	ø 294 x 24.5 x 43				84058600	bore ø 25.4 ø 280 x 65	
2.4 DI (RWD) (F_B_, F_C_, F_A_)	01/00→05/06	88 / 120								94024600	ø 280 x 80.5	⊕ single tyre
2.4 DI (RWD) (F_B_, F_C_)	01/00→05/06	55 / 75								94024800	ø 280 x 75.5	⊕ dual tyres
2.4 TDCi	03/04→05/06	101 / 137										
2.4 TDE	03/04→05/06	85 / 115										
2.4 TDE (F_C_, F_B_, F_A_)	07/01→05/06	92 / 125										

TRANSIT Bus 04/06→

		234200	Bos		2448401	[+] 24484 18.9	BM 330 / 350	Bos		2448601	[+] 24486 17.3	⊕ rear disc brake BM 260/280/300/330/350
2.2 TDCi	04/06→	63 / 85										
2.2 TDCi	04/06→	81 / 110	Bos		2448501	[+] 24485 18.9	BM 260 / 280 / 300	Bre		2912307	[+] 29123 20.3	⊕ rear disc brake BM 460
2.2 TDCi	04/06→	96 / 130										
2.2 TDCi	10/07→	103 / 140	Bos		82054200			Bos		82054300		⊕ rear disc brake BM 260/280/300/330/350
2.2 TDCi	10/08→	85 / 115										
2.2 TDCi	10/11→	74 / 100		PRO	92151803	ø 280 x 28 x 54.4	BM 260 / 280 / 300			91059100	ø 254 x 52	⊕ rear drum brake BM 260 / 280 / 300
2.2 TDCi	10/11→	92 / 125		PRO	92151903	ø 300 x 28 x 54.4	BM 330 / 350			97012200		⊕ rear drum brake BM 260 / 280 / 300
										84059100	bore ø 25.4 ø 254 x 52	⊕ rear drum brake BM 260 / 280 / 300
									ABS	92159100	ø 280 x 16 x 69	⊕ rear disc brake
										94024700	ø 254 x 57.5	⊕ rear drum brake BM 260 / 280 / 300
		234300	Bos		2448401	[+] 24484 18.9		Bos		2448601	[+] 24486 17.3	BM 260/280/300/330/350
2.2 TDCi [RWD]	09/11→	100 / 135										
2.2 TDCi [RWD]	10/11→	74 / 100	Bos		82054200			Bre		2912307	[+] 29123 20.3	BM 460
2.2 TDCi [RWD]	10/11→	92 / 125										
2.4 TDCi	04/06→	74 / 100			92231500	ø 300 x 28 x 54.4	BM 350 ⊕ incr. payload ⊕ dual tyres	Bos		82054300		BM 260/280/300/330/350
2.4 TDCi	04/06→	85 / 115										
2.4 TDCi	04/06→	103 / 140										
3.2 TDCi	02/08→	147 / 200										

F - H

kW / hp											
TRANSIT Bus 04/06→											
234300											
2.2 TDCi (RWD)	09/11→	100 / 135		PRO	92151903	ø 300 x 28 x 54.4			92152000	ø 280 x 16 x 16.3	
2.2 TDCi (RWD)	10/11→	74 / 100									
2.2 TDCi (RWD)	10/11→	92 / 125									
2.4 TDCi	04/06→	74 / 100									
2.4 TDCi	04/06→	85 / 115									
2.4 TDCi	04/06→	103 / 140									
3.2 TDCi	02/08→	147 / 200									
234400											
2.4 TDCi 4x4	11/06→	103 / 140	Bos		2448401	[+] 24484 18.9		Bos	2448601	[+] 24486 17.3	BM 260/280/300/330/350
			Bos		82054200			Bre	2912307	[+] 29123 20.3	BM 460
				PRO	92151903	ø 300 x 28 x 54.4		Bos	82054300		BM 260/280/300/330/350
									92152000	ø 280 x 16 x 16.3	
TRANSIT CONNECT (P65_, P70_, P80_) 06/02→											
234500											
1.8 16V	06/02→	85 / 116	Ate		2344004	[–] 23440 17.6		Ate	2413701	[–] 24137 16.7	⊕ rear disc brake
1.8 16V LPG	06/02→	85 / 116	Ate		82062900			Ate	2413781	[–] 24137 16.7	⊕ rear disc brake
1.8 Di	06/02→	55 / 75							epad		
1.8 TDCi	06/02→	66 / 90	Ate		82071800			Ate	82062900		⊕ rear disc brake
1.8 TDCi	08/06→	81 / 110			92124800	ø 278 x 24 x 44.5		Ate	82503500		⊕ rear disc brake
								Lkh	91061400	ø 228.6 x 57	⊕ rear drum brake
								Lkh	97030900		⊕ rear drum brake
								Lkh	84061400	bore ø 20.6 ø 228.6 x 57	⊕ rear drum brake
									92124900	ø 278 x 11 x 53.7	⊕ rear disc brake
									94024400	ø 228,5 x 67.5	⊕ rear drum brake
234600											
2.0	09/09→	101 / 138	Ate		2344004	[–] 23440 17.6		Ate	2413701	[–] 24137 16.7	⊕ rear disc brake
ELECTRIC	09/12→	58 / 79	Ate		82071800			Ate	2413781	[–] 24137 16.7	⊕ rear disc brake
									epad		
					92124800	ø 278 x 24 x 44.5		Ate	82503500		⊕ rear disc brake
								Lkh	91061400	ø 228.6 x 57	⊕ rear drum brake
									94024400	ø 228,5 x 67.5	⊕ rear drum brake
TRANSIT CONNECT 06/02→ → TOURNEO CONNECT, Page 404											
TRANSIT CONNECT Box 09/13→											
234700											
1.0 EcoBoost	11/13→	74 / 100	Ate		2574801	[–] 25748 18.2		Ate	2521201	[–] 25212 16.1	
1.6 EcoBoost	09/13→	133 / 181	Ate		82032000			Ate	2521281	[–] 25212 16.1	
1.6 EcoBoost	11/13→	110 / 150							epad		
1.6 TDCi	09/13→	55 / 75		PRO	92141303	ø 300 x 25 x 48.5	⊕ rim size 17"	Ate	82503500		
1.6 TDCi	09/13→	70 / 95									
1.6 TDCi	09/13→	85 / 115									
2.5	09/13→	130 / 177									
2.5 CNG	09/13→	130 / 177									
2.5 LPG	09/13→	130 / 177						PRO	92238903	ø 279.8 x 11 x 50.8	⊕ rim size 17"
TRANSIT CONNECT Kasten 09/13→ → TRANSIT CONNECT Box, Page 408											
TRANSIT COURIER Kombi 02/14→											
234800											
1.0 EcoBoost	02/14→	74 / 101	TRW		2513402	[–] 25134 16.7					
1.5 TDCi	02/14→	55 / 75									
1.6 TDCi	02/14→	70 / 95									
TRANSIT CUSTOM Box 12/12→											
234900											
2.2 TDCi	12/12→	74 / 100	TRW		2560201	[+] 25602 17		TRW	2560301	[o] 25603 17.8	
2.2 TDCi	12/12→	92 / 125									
2.2 TDCi	12/12→	114 / 155			93260600	ø 288 x 55.5	⊖ 330		ABS	93260700	ø 288 x 68.8	⊖ 330
TRANSIT CUSTOM Bus 12/12→											
235000											
2.2 TDCi	12/12→	74 / 100	TRW		2560201	[+] 25602 17		TRW	2560301	[o] 25603 17.8	
2.2 TDCi	12/12→	92 / 125									
2.2 TDCi	12/12→	114 / 155			93260600	ø 288 x 55.5	⊖ 330		ABS	93260700	ø 288 x 68.8	⊖ 330
TRANSIT CUSTOM Kasten 12/12→ → TRANSIT CUSTOM Box, Page 408											
TRANSIT Kasten (E_ _) 06/94→03/00 → TRANSIT Box (E_ _), Page 405											
TRANSIT Kasten (FA_ _) 01/00→05/06 → TRANSIT Box (FA_ _), Page 405											
TRANSIT Kasten 04/06→ → TRANSIT Box, Page 406											

TRANSIT Platform/Chassis (E_ _) 08/94→07/00

		kW / hp											
		235100	Ben		2146901	[–] 21469 19	⊕ rim size 15" →08/98			91048500	ø 254 x 52	
2.0 (EME/L/S, ENE/L/S)	08/94→03/00	84 / 114										
2.5 DI (EME/L/S, ENE/L/S)	08/94→03/00	56 / 76	Ben		2147001	[–] 21470 19	⊕ rim size 14" →08/98			91048600	ø 280 x 65	
2.5 DI (EML/S, ENL/S)	08/94→03/00	51 / 69										
2.5 TD (EME/L/S, ENE/L/S)	08/94→03/00	63 / 85	Ben		2146902	[+] 21469 19	⊕ rim size 15" 09/98→	Lkh		97007800		Ø 254 mm
2.5 TD (EME/L/S, ENE/L/S)	08/94→03/00	74 / 101										
			Ben		2147002	[+] 21470 19	⊕ rim size 14" 09/98→	Lkh		97007900		Ø 280 mm
					92088100	ø 254 x 24 x 43	⊕ rim size 14"			83048500	bore ø 22.2 ø 254 x 52	
					92088200	ø 270 x 24.5 x 43	⊕ rim size 15"			83048601	bore ø 20.6 ø 280 x 65	
										83048602	bore ø 25.4 ø 280 x 65	
										94013200	ø 254,0 x 57.5	Ø 254 mm
										94013300	ø 280,0 x 75.5	Ø 280 mm
		235200	Ben		2146902	[+] 21469 19	⊕ rim size 15"			91048500	ø 254 x 52	
2.5 DI (EML, ENE/L)	05/99→03/00	85 / 116										
2.5 TD (EME/L/S, ENE/L/S)	10/98→07/00	55 / 75	Ben		2147002	[+] 21470 19	⊕ rim size 14"			91048600	ø 280 x 65	
					92088100	ø 254 x 24 x 43	⊕ rim size 14"	Lkh		97007800		Ø 254 mm
					92088200	ø 270 x 24.5 x 43	⊕ rim size 15"	Lkh		97007900		Ø 280 mm
										83048500	bore ø 22.2 ø 254 x 52	
										83048601	bore ø 20.6 ø 280 x 65	
										83048602	bore ø 25.4 ø 280 x 65	
										94013200	ø 254,0 x 57.5	Ø 254 mm
										94013300	ø 280,0 x 75.5	Ø 280 mm

TRANSIT Platform/Chassis (FM_ _, FN_ _) 01/00→05/06

		235300	Bos		2343401	[+] 23434 17.7	BM 260 / 280 / 300		91058600	ø 280 x 65	BM 330 / 350
2.0 DI (F_E_, F_F_)	08/00→05/06	55 / 75									
2.0 DI (F_E_, F_F_)	08/00→05/06	63 / 86	Bos		2357701	[+] 23577 18.5	BM 330 / 350		91059100	ø 254 x 52	BM 260 / 280 / 300
2.0 DI (F_E_, F_F_)	08/00→05/06	74 / 100									
2.0 TDCi (F_E_, F_F_)	08/02→05/06	92 / 125									
2.4 TDdi	08/00→08/03	88 / 120	Bos		82063900				97012200		
				PRO	92103803	ø 294 x 24.5 x 43	BM 330 / 350		84058600	bore ø 25.4 ø 280 x 65	BM 330 / 350
				PRO	92110003	ø 276 x 24.5 x 43	BM 260 / 280 / 300		84059100	bore ø 25.4 ø 254 x 52	BM 260 / 280 / 300
									94024600	ø 280 x 80.5	BM 330 / 350
									94024700	ø 254 x 57.5	BM 260 / 280 / 300
		235400	Bos		2357701	[+] 23577 18.5			91058600	ø 280 x 65	
2.3	03/01→03/06	105 / 143									
2.3 16V (F_A_, F_B_, F_C_, F_D_)	04/01→05/06	107 / 146	Bos		82063900				97012200		
2.4 DI (F_A_, F_B_, F_C_, F_D_)	01/00→05/06	55 / 75		PRO	92103803	ø 294 x 24.5 x 43			84058600	bore ø 25.4 ø 280 x 65	
2.4 DI (F_A_, F_B_, F_C_, F_D_)	01/00→05/06	66 / 90									
2.4 DI (F_A_, F_B_, F_C_, F_D_)	01/00→05/06	88 / 120							94024600	ø 280 x 80.5	⊕ single tyre
2.4 TDCi	03/04→05/06	101 / 137							94024800	ø 280 x 75.5	⊕ dual tyres
2.4 TDE	07/01→05/06	92 / 125									
2.4 TDE	03/04→05/06	85 / 115									
		235500	Bos		2357701	[+] 23577 18.5			91058600	ø 280 x 65	
2.3 BiFuel	03/01→03/06	105 / 143									
									97012200		
									84058600	bore ø 25.4 ø 280 x 65	
									94024600	ø 280 x 80.5	⊕ single tyre
									94024800	ø 280 x 75.5	⊕ dual tyres

TRANSIT Platform/Chassis 04/06→

		235600	Bos		2448401	[+] 24484 18.9	BM 330 / 350	Bos	2448601	[+] 24486 17.3	⊕ rear disc brake BM 260/280/300/330/350
2.2 TDCi	04/06→	63 / 85									
2.2 TDCi	04/06→	81 / 110	Bos		2448501	[+] 24485 18.9	BM 260 / 280 / 300	Bre	2912307	[+] 29123 20.3	⊕ rear disc brake BM 460
2.2 TDCi	04/06→	96 / 130									
2.2 TDCi	10/07→	103 / 140									
2.2 TDCi	10/08→	85 / 115	Bos		82054200			Bos	82054300		⊕ rear disc brake BM 260/280/300/330/350
2.2 TDCi	10/11→	74 / 100									
2.2 TDCi	10/11→	92 / 125									

TRANSIT Platform/Chassis 04/06→

		kW / hp										
		235600										
2.2 TDCi	04/06→	63 / 85		PRO	92151803	ø 280 x 28 x 54.4	BM 260 / 280 / 300			91059100	ø 254 x 52	⊕ rear drum brake BM 260 / 280 / 300
2.2 TDCi	04/06→	81 / 110		PRO	92151903	ø 300 x 28 x 54.4	BM 330 / 350			97012200		⊕ rear drum brake BM 260 / 280 / 300
2.2 TDCi	04/06→	96 / 130								84059100	bore ø 25.4 ø 254 x 52	⊕ rear drum brake BM 260 / 280 / 300
2.2 TDCi	10/07→	103 / 140							ABS	92159100	ø 280 x 16 x 69	⊕ rear disc brake
2.2 TDCi	10/08→	85 / 115								94024700	ø 254 x 57.5	⊕ rear drum brake BM 260 / 280 / 300
2.2 TDCi	10/11→	74 / 100										
2.2 TDCi	10/11→	92 / 125										
		235700	Bos		2448401	[+] 24484 18.9		Bos		2448601	[+] 24486 17.3	BM 260/280/300/330/350
2.2 TDCi [RWD]	10/11→	74 / 100										
2.2 TDCi [RWD]	10/11→	92 / 125	Bos		82054200			Bre		2912307	[+] 29123 20.3	BM 460
2.2 TDCi [RWD]	10/11→	114 / 155										
2.4 TDCi	04/06→	74 / 100										
2.4 TDCi	04/06→	85 / 115			92231500	ø 300 x 28 x 54.4	BM 350 ⊕ incr. payload ⊕ dual tyres	Bos		82054300		BM 260/280/300/330/350
2.4 TDCi	04/06→	103 / 140										
3.2 TDCi	09/07→	147 / 200		PRO	92151903	ø 300 x 28 x 54.4				92152000	ø 280 x 16 x 16.3	
		235800	Bos		2448401	[+] 24484 18.9		Bos		2448601	[+] 24486 17.3	BM 260/280/300/330/350
2.2 TDCi 4x4	10/11→	92 / 125										
2.4 TDCi 4x4	11/06→	103 / 140	Bos		82054200			Bre		2912307	[+] 29123 20.3	BM 460
				PRO	92151903	ø 300 x 28 x 54.4		Bos		82054300		BM 260/280/300/330/350
										92152000	ø 280 x 16 x 16.3	
		235900	Bos		2448401	[+] 24484 18.9		Bre		2912307	[+] 29123 20.3	
2.3 16V	04/06→	107 / 145										
			Bos		82054200					93242500	ø 284 x 16 x 43.9	
					92231500	ø 300 x 28 x 54.4						

TRANSIT Pritsche/Fahrgestell (E_ _) 08/94→07/00 → TRANSIT Platform/Chassis (E_ _), Page 409

TRANSIT Pritsche/Fahrgestell (FM_ _, FN_ _) 01/00→05/06 → TRANSIT Platform/Chassis (FM_ _, FN_ _), Page 409

TRANSIT Pritsche/Fahrgestell 04/06→ → TRANSIT Platform/Chassis, Page 409

TRANSIT TOURNEO 08/94→12/00

		236000	Ben		2146901	[–] 21469 19	⊕ rim size 15" →08/98			91048500	ø 254 x 52	
2.0	11/94→12/00	84 / 114										
2.4 D	08/94→06/00	55 / 74	Ben		2147001	[–] 21470 19	⊕ rim size 14" →08/98			91048600	ø 280 x 65	
2.5 DI	11/94→12/00	51 / 69										
2.5 DI	11/94→12/00	56 / 76										
2.5 TD	11/94→12/00	63 / 85	Ben		2146902	[+] 21469 19	⊕ rim size 15" 09/98→	Lkh		97007800		Ø 254 mm
			Ben		2147002	[+] 21470 19	⊕ rim size 14" 09/98→	Lkh		97007900		Ø 280 mm
					92088100	ø 254 x 24 x 43	⊕ rim size 14"			83048500	bore ø 22.2 ø 254 x 52	
					92088200	ø 270 x 24.5 x 43	⊕ rim size 15"			83048601	bore ø 20.6 ø 280 x 65	
										83048602	bore ø 25.4 ø 280 x 65	
										94013200	ø 254,0 x 57.5	Ø 254 mm
										94013300	ø 280,0 x 75.5	Ø 280 mm
		236100	Ben		2146902	[+] 21469 19	⊕ rim size 15" 09/98→			91048500	ø 254 x 52	
2.5 TD	04/98→12/00	74 / 100										
			Ben		2147002	[+] 21470 19	⊕ rim size 14" 09/98→			91048600	ø 280 x 65	
					92088100	ø 254 x 24 x 43	⊕ rim size 14"			83048500	bore ø 22.2 ø 254 x 52	
					92088200	ø 270 x 24.5 x 43	⊕ rim size 15"			83048601	bore ø 20.6 ø 280 x 65	
										83048602	bore ø 25.4 ø 280 x 65	
										94013200	ø 254,0 x 57.5	Ø 254 mm
										94013300	ø 280,0 x 75.5	Ø 280 mm

TRANSIT TOURNEO 07/06→

		236200	Bos		2448401	[+] 24484 18.9	BM 330 / 350	Bos		2448601	[+] 24486 17.3	⊕ rear disc brake BM 260/280/300/330/350
2.2 TDCi	07/06→	81 / 110										
2.2 TDCi	07/06→	96 / 131	Bos		2448501	[+] 24485 18.9	BM 260 / 280 / 300	Bre		2912307	[+] 29123 20.3	⊕ rear disc brake BM 460
2.2 TDCi	10/07→	103 / 140										
2.2 TDCi	10/08→	85 / 115	Bos		82054200			Bos		82054300		⊕ rear disc brake BM 260/280/300/330/350
				PRO	92151803	ø 280 x 28 x 54.4	BM 260 / 280 / 300			91059100	ø 254 x 52	⊕ rear drum brake BM 260 / 280 / 300

→

kW / hp										
TRANSIT TOURNEO 07/06→										
236200										
2.2 TDCi 07/06→ 81 / 110		PRO	92151903	ø 300 x 28 x 54.4	BM 330 / 350		97012200		⊕ rear drum brake BM 260 / 280 / 300
2.2 TDCi 07/06→ 96 / 131							84059100	bore ø 25.4 ø 254 x 52	⊕ rear drum brake BM 260 / 280 / 300
2.2 TDCi 10/07→ 103 / 140						ABS	92159100	ø 280 x 16 x 69	⊕ rear disc brake
2.2 TDCi 10/08→ 85 / 115							94024700	ø 254 x 57.5	⊕ rear drum brake BM 260 / 280 / 300
TRANSIT Van (E_ _) 06/94→03/00 → TRANSIT Box (E_ _), Page 405										
TRANSIT Van (FA_ _) 01/00→05/06 → TRANSIT Box (FA_ _), Page 405										

FORD (CHANGAN) FORD (CHANGAN)

kW / hp										
FOCUS Hatchback (CD5) 08/06→12/11										
236300										
2.0 08/06→12/11 104 / 140		PRO	92141203	ø 278 x 25 x 48.5		Ate	2521201	[–] 25212 16.1	
						Ate epad	2521281	[–] 25212 16.1	
FOCUS Saloon (CD4) 09/05→12/11										
236400										
2.0 09/05→12/11 104 / 140						Ate	2521201	[–] 25212 16.1	
						Ate epad	2521281	[–] 25212 16.1	
FOCUS Schrägheck (CD5) 08/06→12/11 → FOCUS Hatchback (CD5), Page 411										
FOCUS Stufenheck (CD4) 09/05→12/11 → FOCUS Saloon (CD4), Page 411										
MONDEO 05/03→										
236500	Bos		2327904	[–] 23279 18.4		Bos	2426001	[–] 24260 16.3	
2.0 05/03→ 105 / 141						Bos	2355701	[–] 23557 17.2	
		PRO	92109703	ø 280 x 12 x 34					

FORD ASIA / OZEANIA FORD ASIA / OZEANIA

kW / hp										
COURIER Pickup (UF_, UN_) 07/93→10/02										
236600	Kel		2354001	[+] 23540 16.5			94033500	ø 270 x 67.5	
2.2 02/99→10/02 60 / 82			92136200	ø 256 x 24 x 24					
236700	Ake		2367801	[+] 23678 16			91057700	ø 260 x 51	
2.5 D 03/96→01/99 63 / 86			92236200	ø 274 x 28 x 28	04/96→		94035500	ø 260,0 x 63	
2.6 07/93→01/99 90 / 122			92236300	ø 256 x 24 x 24	→04/96				
236800	Wag		2347201	[+] 23472 17			91057700	ø 260 x 51	
2.5 D All-wheel Drive 03/96→01/99 63 / 86									
2.6 All-wheel Drive 07/93→01/99 90 / 122							94035500	ø 260,0 x 63	
236900	Kel		2354001	[+] 23540 16.5			91063700	ø 295 x 56	
2.5 TD All-wheel Drive 02/99→ 80 / 109			92136300	ø 274 x 24 x 24			94035400	ø 295,0 x 67.8	
COURIER Pick-up (UF_, UN_) 07/93→10/02 → COURIER Pickup (UF_, UN_), Page 411										
ENDEAVOUR (25N_) 05/03→										
237000	Tok		2435301	[+] 24353 16.9					
2.5 TD 05/03→ 81 / 110									
2.5 TD All-wheel Drive 05/03→ 81 / 110	Kel		82511700						
ENDEAVOUR (25N_) 05/03→ → EVEREST (25N_), Page 411										
EVEREST (25N_) 05/03→										
237100	Kel		2354001	[+] 23540 16.5			94033500	ø 270 x 67.5	
2.5 TD 05/03→ 81 / 110									
2.5 TD 05/03→08/06 88 / 120									
2.5 TD 05/03→08/06 89 / 121			92136200	ø 256 x 24 x 24					
2.5 TD 09/06→ 105 / 143									
237200	Kel		2354001	[+] 23540 16.5			91063700	ø 295 x 56	
2.5 TD All-wheel Drive 05/03→ 81 / 110									
2.5 TD All-wheel Drive 05/03→08/06 88 / 120									
2.5 TD All-wheel Drive 09/06→ 105 / 143			92136300	ø 274 x 24 x 24			94035400	ø 295,0 x 67.8	
3.0 TD All-wheel Drive 08/06→ 115 / 156									

FORD ASIA / OZEANIA

FORD ASIA / OZEANIA

		kW / hp									
FESTIVA (BA_2, BJ_2) 11/90→09/03											
1.3	11/90→09/03	237300 54 / 73	Sum		2135501	[+] 21355 14.5			91039700	ø 170 x 26	
			Sum		82056900				97007500		
					92116900	ø 219 x 13 x 37			94015800	ø 170,0 x 34.5	
FIGO 01/10→											
1.2	01/10→	237400 52 / 71		PRO	92096203	ø 258 x 22 x 43.5	⊕ ABS →02/11		94012900	ø 180,0 x 44	⊖ ABS
1.4 TDCi	01/10→	51 / 69									
PRONTO Box (DA_V) 04/97→10/01											
1.0	04/97→10/01	237500 33 / 45	Sum		2073101	[–] 20731 15.2	⊕ rim 4 hole		91041300	ø 220 x 40	
			Sum		2114202	[–] 21142 15.5	⊕ rim 5 hole				
			Ake		2330301	[–] 23303 15.2					
					92036600	ø 289 x 10 x 46	⊕ rim 5 hole				
					92043800	ø 215 x 10 x 33	⊕ rim 4 hole				
PRONTO Bus (DA_H) 04/97→10/01											
1.0	04/97→10/01	237600 33 / 45	Sum		2073101	[–] 20731 15.2	⊕ rim 4 hole		91041300	ø 220 x 40	
			Sum		2114202	[–] 21142 15.5	⊕ rim 5 hole				
			Ake		2330301	[–] 23303 15.2					
					92036600	ø 289 x 10 x 46	⊕ rim 5 hole				
					92043800	ø 215 x 10 x 33	⊕ rim 4 hole				
PRONTO Kasten (DA_V) 04/97→10/01 → PRONTO Box (DA_V), Page 412											

FORD AUSTRALIA

FORD AUSTRALIA

		kW / hp									
COUGAR Coupe (SW, SX) 10/99→03/03											
2.5	10/99→03/03	237700 125 / 170	Ate		2139408	[–] 21394 18.5		Bos	2341007	[–] 23410 15.7	
			Ate		2307104	[+] 23071 18.5		Bos	2341008	[+] 23410 15.7	
			Ate		82032100			Bos	82031600		
			Ate		82062900				92063603	ø 253 x 20 x 43.7	
					92075400	ø 278 x 24 x 47					
COURIER Pickup (PD) 05/96→02/99											
2.5 D	05/96→02/99	237800 63 / 86	Ake		2367801	[+] 23678 16			91057700	ø 260 x 51	
					92236300	ø 256 x 24 x 24			94035500	ø 260,0 x 63	
2.5 D All-wheel Drive	05/96→02/99	237900 63 / 86	Wag		2347201	[+] 23472 17			91057700	ø 260 x 51	
2.6 i 4x4	05/96→02/99	92 / 125							94035500	ø 260,0 x 63	
2.6 i	05/96→02/99	238000 92 / 125	Ake		2367801	[+] 23678 16			91057700	ø 260 x 51	
			Ake		2367801	[+] 23678 16	2x		94035500	ø 260,0 x 63	
					92236300	ø 256 x 24 x 24					
COURIER Pick-up (PD) 05/96→02/99 → COURIER Pickup (PD), Page 412											
COURIER Pickup (PE) 02/99→11/02											
2.5 TD	02/99→11/02	238100 86 / 117	Kel		2354001	[+] 23540 16.5			94033500	ø 270 x 67.5	
2.6 i	02/99→11/02	92 / 125			92236300	ø 256 x 24 x 24					
2.5 TD 4x4	02/99→11/02	238200 86 / 117	Kel		2354001	[+] 23540 16.5			91063700	ø 295 x 56	
2.6 i 4x4	02/99→11/02	92 / 125			92136300	ø 274 x 24 x 24			94035400	ø 295,0 x 67.8	
COURIER Pick-up (PE) 02/99→11/02 → COURIER Pickup (PE), Page 412											

		kW / hp										
COURIER Pickup (PG) 11/02→07/04												
238300			Kel		2354001	[+] 23540 16.5				94033500	ø 270 x 67.5	
2.5 TD	11/02→07/04	86 / 117										
2.6 i	11/02→07/04	92 / 125			92136200	ø 256 x 24 x 24						
238400			Kel		2354001	[+] 23540 16.5				91063700	ø 295 x 56	
2.5 TD 4x4	11/02→07/04	86 / 117										
2.6 i 4x4	11/02→07/04	92 / 125			92136300	ø 274 x 24 x 24				94035400	ø 295,0 x 67.8	
COURIER Pick-up (PG) 11/02→07/04 → COURIER Pickup (PG), Page 413												
COURIER Pickup (PH) 08/04→12/06												
238500			Kel		2354001	[+] 23540 16.5				94033500	ø 270 x 67.5	
2.5 TD	08/04→12/06	86 / 117										
					92136200	ø 256 x 24 x 24						
238600			Kel		2354001	[+] 23540 16.5				91063700	ø 295 x 56	
2.5 TD All-wheel Drive	08/04→12/06	86 / 117										
2.6 All-wheel Drive	08/04→02/06	92 / 125			92136300	ø 274 x 24 x 24				94035400	ø 295,0 x 67.8	
238700			Kel		2354001	[+] 23540 16.5				94033500	ø 270 x 67.5	
2.6 i	08/04→02/06	92 / 125										
					92236300	ø 256 x 24 x 24						
238800			Kel		2354001	[+] 23540 16.5						
4.0 i	02/05→12/06	154 / 209										
238900			Kel		2354001	[+] 23540 16.5	Kelsey Hayes					
4.0 i 4x4	02/05→12/06	154 / 209										
			Tok		2435301	[+] 24353 16.9	Tokico					
			Kel		82511700		Tokico					
COURIER Pick-up (PH) 08/04→12/06 → COURIER Pickup (PH), Page 413												
COURIER Platform/Chassis (PD) 05/96→02/99												
239000			Ake		2367801	[+] 23678 16				91057700	ø 260 x 51	
2.5 D	05/96→02/99	64 / 87										
2.6 i	05/96→02/99	92 / 125			92236300	ø 256 x 24 x 24				94035500	ø 260,0 x 63	
239100			Ake		2157101	[+] 21571 17.1						
2.5 D 4x4	05/96→02/99	64 / 87										
2.6 i 4x4	05/96→02/99	92 / 125										
COURIER Platform/Chassis (PE) 02/99→11/02												
239200			Kel		2354001	[+] 23540 16.5				94033500	ø 270 x 67.5	
2.5 TD	02/99→11/02	86 / 117										
2.6 i	02/99→11/02	92 / 125			92236300	ø 256 x 24 x 24						
239300			Kel		2354001	[+] 23540 16.5				91063700	ø 295 x 56	
2.5 TD 4x4	02/99→11/02	86 / 117										
2.6 i 4x4	02/99→11/02	92 / 125			92136300	ø 274 x 24 x 24				94035400	ø 295,0 x 67.8	
COURIER Platform/Chassis (PG) 11/02→07/04												
239400			Kel		2354001	[+] 23540 16.5						
2.5 TD	11/02→07/04	86 / 117										
2.5 TD 4x4	11/02→07/04	86 / 117										
2.6 i	11/02→07/04	92 / 125										
2.6 i 4x4	11/02→07/04	92 / 125										
COURIER Platform/Chassis (PH) 08/04→12/06												
239500			Kel		2354001	[+] 23540 16.5						
2.5 TD	08/04→12/06	86 / 117										
239600			Kel		2354001	[+] 23540 16.5	Kelsey Hayes					
2.5 TD 4x4	08/04→12/06	86 / 117										
2.6 i 4x4	08/04→02/06	92 / 125	Tok		2435301	[+] 24353 16.9	Tokico					
			Kel		82511700		Tokico					
239700			Kel		2354001	[+] 23540 16.5				94033500	ø 270 x 67.5	
2.6 i	08/04→02/06	92 / 125										
					92236300	ø 256 x 24 x 24						
COURIER Pritsche/Fahrgestell (PD) 05/96→02/99 → COURIER Platform/Chassis (PD), Page 413												
COURIER Pritsche/Fahrgestell (PE) 02/99→11/02 → COURIER Platform/Chassis (PE), Page 413												
COURIER Pritsche/Fahrgestell (PG) 11/02→07/04 → COURIER Platform/Chassis (PG), Page 413												
COURIER Pritsche/Fahrgestell (PH) 08/04→12/06 → COURIER Platform/Chassis (PH), Page 413												
ECONOVAN Box (JG) 06/97→01/00												
239800			Ake		2000201	[+] 20002 15						
2.0	06/97→01/00	63 / 86										

kW / hp													
ECONOVAN Box (JH) 01/00→07/06													
239900			Sum		**2348801**	[+] 23488 16							
1.8 i	03/03→07/06	67 / 91											
2.0	01/00→02/03	63 / 86											
2.0 i	03/03→07/06	71 / 97											
ECONOVAN Kasten (JG) 06/97→01/00 → ECONOVAN Box (JG), Page 413													
ECONOVAN Kasten (JH) 01/00→07/06 → ECONOVAN Box (JH), Page 414													
ECONOVAN Platform/Chassis (JG) 06/97→01/00													
240000			Ake		**2000201**	[+] 20002 15							
2.0	06/97→01/00	63 / 86											
ECONOVAN Pritsche/Fahrgestell (JG) 06/97→01/00 → ECONOVAN Platform/Chassis (JG), Page 414													
ESCAPE (BA, ZA, ZB, ZC, ZD) 03/01→													
240100			Ate		**2378701**	[–] 23787 18.3	⊕ rear drum brake	Ate		**2467001**	[–] 24670 17.1	⊕ rear disc brake	
2.3	03/01→	108 / 147											
3.0 All-wheel Drive	03/01→	149 / 203	Ate		**2443901**	[–] 24439 15	⊕ rear disc brake			**91060600**	ø 228.6 x 43	⊕ rear drum brake	
			Ate		**82029300**			Sum		**97015900**		⊕ rear drum brake	
			Ate		**82062900**				PRO	**92197803**	ø 302 x 12 x 56	⊕ rear disc brake	
				PRO	**92146503**	ø 278 x 24 x 47	⊕ rear drum brake						
				PRO	**92197703**	ø 303 x 26 x 47	⊕ rear disc brake						
EXPLORER (U_) 09/96→01/08													
240200			Wag		**2347201**	[+] 23472 17		Kel		**2362701**	[+] 23627 15	⊕ ABS	
4.0	09/96→10/01	152 / 207											
4.0	10/99→10/01	150 / 204		PRO	**92169003**	ø 285 x 26 x 66.5				**91075700**	ø 254 x 65	⊖ ABS	
										92169100	ø 285 x 12 x 58.6	⊕ ABS	
240300			Ake		**2506801**	[–] 25068 16.4		Kel		**2438101**	[–] 24381 14.6	⊕ ABS	
4.0	10/01→01/08	157 / 214											
4.6	11/01→01/08	178 / 242		PRO	**92169003**	ø 285 x 26 x 66.5				**91075700**	ø 254 x 65	⊖ ABS	
										92169100	ø 285 x 12 x 58.6	⊕ ABS	
FAIRLANE Saloon (AU) 03/99→12/02													
240400					**2585401**	[–] 25854 12.9		Luc		**2324204**	[–] 23242 14.2		
4.0 MPFi	03/99→12/02	157 / 214											
4.0 MPFi	03/99→12/02	168 / 228											
5.0 MPFi V8	03/99→12/02	175 / 238											
FAIRLANE Saloon (BA) 07/03→09/05													
240500					**2482901**	[–] 24829 14.7							
4.0 MPFi	07/03→09/05	182 / 248											
5.4 MPFi V8	07/03→09/05	220 / 299											
FAIRLANE Saloon (BF) 10/05→12/07													
240600					**2482901**	[–] 24829 14.7							
4.0 MPFi	10/05→12/07	190 / 258											
5.4 MPFi V8	10/05→12/07	230 / 313											
FAIRLANE Saloon (NL) 09/96→02/99													
240700					**2585401**	[–] 25854 12.9		Luc		**2324204**	[–] 23242 14.2		
4.0 MPFi	09/96→02/99	164 / 223											
4.9 Efi V8	09/96→02/99	165 / 224											
FAIRLANE Stufenheck (AU) 03/99→12/02 → FAIRLANE Saloon (AU), Page 414													
FAIRLANE Stufenheck (BA) 07/03→09/05 → FAIRLANE Saloon (BA), Page 414													
FAIRLANE Stufenheck (BF) 10/05→12/07 → FAIRLANE Saloon (BF), Page 414													
FAIRLANE Stufenheck (NL) 09/96→02/99 → FAIRLANE Saloon (NL), Page 414													
FAIRMONT Estate (AU) 08/98→09/02													
240800					**2585301**	[–] 25853 15.4	04/00→	Luc		**2324204**	[–] 23242 14.2		
4.0 i	09/98→09/02	157 / 214											
5.0	08/98→09/02	175 / 238			**2585401**	[–] 25854 12.9	→03/00						
240900					**2585301**	[–] 25853 15.4		Luc		**2324204**	[–] 23242 14.2		
4.0 i	04/00→09/02	172 / 234											
241000					**2585401**	[–] 25854 12.9		Luc		**2324204**	[–] 23242 14.2		
4.0 LPG	09/98→03/00	164 / 223											
FAIRMONT Kombi (AU) 08/98→09/02 → FAIRMONT Estate (AU), Page 414													
FAIRMONT Saloon (AU) 09/98→09/02													
241100					**2585401**	[–] 25854 12.9		Luc		**2324204**	[–] 23242 14.2		
4.0 i	09/98→03/00	164 / 223											
241200					**2585301**	[–] 25853 15.4	04/00→	Luc		**2324204**	[–] 23242 14.2		
4.0 i	09/98→09/02	157 / 214											
5.0 i V8	09/98→09/02	175 / 238			**2585401**	[–] 25854 12.9	→03/00						
241300					**2585301**	[–] 25853 15.4		Luc		**2324204**	[–] 23242 14.2		
4.0 i	04/00→09/02	172 / 234											

		kW / hp										
FAIRMONT Stufenheck (AU) 09/98→09/02 → FAIRMONT Saloon (AU), Page 414												
FALCON Box (XH) 03/96→05/99												
		241400		**2585401**	[–] 25854	12.9			**2585501**	[–] 25855	12.9	
4.0	03/96→05/99	148 / 201										
FALCON Estate (AU) 09/98→09/02												
		241500		**2585301**	[–] 25853	15.4		Luc	**2324204**	[–] 23242	14.2	
4.0 i	07/00→09/02	157 / 214										
		241600		**2585301**	[–] 25853	15.4	05/00→	Luc	**2324204**	[–] 23242	14.2	
4.0 LPG	09/98→07/00	143 / 194		**2585401**	[–] 25854	12.9	→04/00					
FALCON Estate (BA) 09/02→09/05												
		241700		**2482901**	[–] 24829	14.7		Luc	**2324204**	[–] 23242	14.2	
4.0 i	09/02→09/05	182 / 248										
4.0 LPG	09/02→09/05	156 / 212										
FALCON Estate (BF) 10/05→												
		241800		**2482901**	[–] 24829	14.7		Luc	**2324204**	[–] 23242	14.2	
4.0 i	10/05→	190 / 258										
4.0 LPG	10/05→	156 / 212										
FALCON Kasten (XH) 03/96→05/99 → FALCON Box (XH), Page 415												
FALCON Kombi (AU) 09/98→09/02 → FALCON Estate (AU), Page 415												
FALCON Kombi (BA) 09/02→09/05 → FALCON Estate (BA), Page 415												
FALCON Kombi (BF) 10/05→ → FALCON Estate (BF), Page 415												
FALCON Pickup (AU) 09/98→09/02												
		241900		**2585301**	[–] 25853	15.4	05/00→	Luc	**2324204**	[–] 23242	14.2	
4.0 i	06/99→09/02	157 / 214										
4.0 i XR6	07/99→09/02	164 / 223										
5.0 i V8 XR8	07/99→02/01	185 / 252		**2585401**	[–] 25854	12.9	→04/00					
		242000		**2585301**	[–] 25853	15.4		Luc	**2324204**	[–] 23242	14.2	
4.0 i XR6	04/02→09/02	172 / 234										
4.0 LPG	04/02→09/02	143 / 194										
5.0 i V8 XR8	04/00→09/02	200 / 272										
5.6 i V8 XR8 Pursuit	03/02→09/02	250 / 340										
		242100		**2585401**	[–] 25854	12.9		Luc	**2324204**	[–] 23242	14.2	
5.0 i V8	09/98→03/00	175 / 238										
FALCON Pick-up (AU) 09/98→09/02 → FALCON Pickup (AU), Page 415												
FALCON Pickup (BA) 09/02→09/05												
		242200		**2482901**	[–] 24829	14.7		Luc	**2324204**	[–] 23242	14.2	
4.0 i (Inc XR6)	10/02→09/05	182 / 248										
4.0 i XR6 Turbo	10/04→09/05	240 / 326										
4.0 LPG	09/02→09/05	156 / 212										
5.4 i V8	09/02→09/05	220 / 299										
5.4 i V8 XR8	02/03→09/05	260 / 354										
FALCON Pick-up (BA) 09/02→09/05 → FALCON Pickup (BA), Page 415												
FALCON Pickup (BF) 10/05→04/08												
		242300		**2482901**	[–] 24829	14.7		Luc	**2324204**	[–] 23242	14.2	
4.0	10/05→04/08	156 / 212										
4.0 i XR6	10/05→04/08	190 / 258										
4.0 i XR6 Turbo	10/05→04/08	245 / 333										
5.4 i V8	10/05→04/08	220 / 299										
5.4 i V8 XR8	10/05→04/08	260 / 354										
FALCON Pick-up (BF) 10/05→04/08 → FALCON Pickup (BF), Page 415												
FALCON Pickup (FG) 02/08→												
		242400		**2482901**	[–] 24829	14.7		Luc	**2324204**	[–] 23242	14.2	
4.0 i R6(Inc XR6)	02/08→	195 / 265										
4.0 i Turbo (Inc XR6)	02/08→	270 / 367										
4.0 LPG	02/08→	156 / 212										
4.0 LPi	12/11→	198 / 269										
		242500		**2482901**	[–] 24829	14.7						
5.4 i V8 XR8	02/08→	290 / 394										
FALCON Pick-up (FG) 02/08→ → FALCON Pickup (FG), Page 415												
FALCON Pickup (XH) 03/96→05/99												
		242600		**2585401**	[–] 25854	12.9			**2585501**	[–] 25855	12.9	
4.0	03/96→05/99	148 / 201										
4.0 XR6 Efi	04/96→05/99	164 / 223										
5.0 Efi V8 XR8	10/97→05/99	185 / 252										
FALCON Pick-up (XH) 03/96→05/99 → FALCON Pickup (XH), Page 415												
FALCON Platform/Chassis (AU) 07/99→09/02												
		242700		**2585301**	[–] 25853	15.4		Luc	**2324204**	[–] 23242	14.2	
4.0 i	07/00→09/02	157 / 214										
4.0 i XR6	02/02→09/02	172 / 234										
4.0 LPG	04/02→09/02	143 / 194										
		242800		**2585301**	[–] 25853	15.4	05/00→	Luc	**2324204**	[–] 23242	14.2	
4.0 i XR6	07/99→09/02	164 / 223										
5.0 i V8	07/99→09/02	175 / 238		**2585401**	[–] 25854	12.9	→04/00					
FALCON Platform/Chassis (BA) 09/02→09/05												
		242900		**2482901**	[–] 24829	14.7		Luc	**2324204**	[–] 23242	14.2	
4.0 i	09/02→09/05	182 / 248										
4.0 i Turbo	09/02→09/05	220 / 299										

F - H

		kW / hp											
FALCON Platform/Chassis (BA) 09/02→09/05													
4.0 LPG	09/02→09/05	156 / 212		2482901	[–] 24829	14.7		Luc		2324204	[–] 23242	14.2	
5.4 i V8	09/02→09/05	220 / 299											
FALCON Platform/Chassis (BF) 10/05→04/08													
		243000		2482901	[–] 24829	14.7		Luc		2324204	[–] 23242	14.2	
4.0 i	10/05→04/08	190 / 258											
4.0 LPG	10/05→01/08	156 / 212											
5.4 i V8	10/05→01/08	220 / 299											
FALCON Platform/Chassis (FG) 02/08→													
		243100		2482901	[–] 24829	14.7		Luc		2324204	[–] 23242	14.2	
4.0 i	02/08→	195 / 265											
4.0 i Turbo XR6/G6	02/08→	270 / 367											
4.0 LPG	02/08→	156 / 212											
4.0 LPi	12/11→	198 / 269											
FALCON Pritsche/Fahrgestell (AU) 07/99→09/02 → FALCON Platform/Chassis (AU), Page 415													
FALCON Pritsche/Fahrgestell (BA) 09/02→09/05 → FALCON Platform/Chassis (BA), Page 415													
FALCON Pritsche/Fahrgestell (BF) 10/05→04/08 → FALCON Platform/Chassis (BF), Page 416													
FALCON Pritsche/Fahrgestell (FG) 02/08→ → FALCON Platform/Chassis (FG), Page 416													
FALCON Saloon (AU) 09/98→09/02													
		243200		2585301	[–] 25853	15.4	05/00→	Luc		2324204	[–] 23242	14.2	
4.0 i	09/98→09/02	157 / 214											
5.0 i V8	09/98→09/02	175 / 238		2585401	[–] 25854	12.9	→04/00						
		243300		2585401	[–] 25854	12.9		Luc		2324204	[–] 23242	14.2	
4.0 i XR6	09/98→03/00	164 / 223											
5.0 i V8 XR8	09/98→04/00	185 / 252											
		243400		2585301	[–] 25853	15.4		Luc		2324204	[–] 23242	14.2	
4.0 i XR6	04/00→09/02	172 / 234											
4.0 LPG	07/00→09/02	156 / 212											
5.0 i V8 XR8	04/00→04/01	200 / 272											
5.0 i V8 XR8	05/01→09/02	220 / 299											
5.6 i V8 XR8 Pursuit	03/02→09/02	250 / 340											
FALCON Saloon (BA) 09/02→09/05													
		243500		2482901	[–] 24829	14.7	⊖ C5-C6 caliper	Luc		2324204	[–] 23242	14.2	
4.0 i (Inc XR6)	09/02→09/05	182 / 248											
4.0 i XR6 Turbo	09/02→09/05	240 / 326	PBR	2419401	[+] 24194	15.3	⊕ C5-C6 caliper						
4.0 LPG	09/02→09/05	156 / 212											
5.4 i V8	09/02→09/05	220 / 299											
5.4 i V8 XR8	01/03→09/05	260 / 354											
FALCON Saloon (BF) 10/05→04/08													
		243600		2482901	[–] 24829	14.7		Luc		2324204	[–] 23242	14.2	⊕ - XR6
4.0	10/05→04/08	156 / 212											
4.0 i (Inc XR6)	10/05→04/08	190 / 258											
		243700		2482901	[–] 24829	14.7							
4.0 i XR6 Turbo	10/05→04/08	245 / 333											
5.4 i V8 XR8	10/05→04/08	260 / 354											
		243800		2482901	[–] 24829	14.7		Luc		2324204	[–] 23242	14.2	
5.4 i V8	10/05→04/08	230 / 313											
FALCON Saloon (FG) 02/08→													
		243900		2482901	[–] 24829	14.7		Luc		2324204	[–] 23242	14.2	
4.0 EocLPi	08/10→	198 / 269											
4.0 i G6/XR6	02/08→	195 / 265											
4.0 i Turbo G6/XR6	02/08→	270 / 367											
4.0 LPG	02/08→	156 / 212											
		244000		2482901	[–] 24829	14.7							
5.4 i V8 XR8	02/08→	290 / 394											
FALCON Stufenheck (AU) 09/98→09/02 → FALCON Saloon (AU), Page 416													
FALCON Stufenheck (BA) 09/02→09/05 → FALCON Saloon (BA), Page 416													
FALCON Stufenheck (BF) 10/05→04/08 → FALCON Saloon (BF), Page 416													
FALCON Stufenheck (FG) 02/08→ → FALCON Saloon (FG), Page 416													
FESTIVA (WF) 01/98→12/01													
		244100	Sum	2165404	[+] 21654	15				91039700	ø 170 x 26		
1.3 i	01/98→04/01	47 / 64											
1.5 i	01/98→12/01	56 / 76											
FIESTA (WS) 10/08→													
		244200	Luc	2428302	[–] 24283	17.6				91069200	ø 200 x 32		
1.4 i	10/09→	71 / 97											
1.6 i	10/08→	88 / 120	Luc	82512900						97038600			
1.6 TDCi	01/09→	66 / 90											
				PRO 92176003	ø 258 x 23 x 44								
FIESTA Hatchback (WP, WQ) 04/04→03/09													
		244300	Ate	2360406	[–] 23604	18.8		Lkh		91057300	ø 203.2 x 38		
1.6 i	04/04→12/08	74 / 100											
			Ate	82029200				Lkh		97015500			
			Ate	82062900				Lkh		84057300	bore ø 19 ø 203.2 x 38		
				PRO 92096203	ø 258 x 22 x 43.5					94026700	ø 203,0 x 44.5		

→

30 kW / hp

FIESTA Hatchback (WP, WQ) 04/04→03/09

2.0 i XR4	06/07→03/09	244400 110 / 150	Ate	2344007	[–] 23440 17.1		Luc	2335301	[–] 23353 14	
			Ate	82029200			Luc	82062800		
			Ate	82062900				92088403	ø 253 x 10.3 x 33.2	
				92096203	ø 258 x 22 x 43.5					
				92159003	ø 278 x 25 x 45					

FIESTA Hatchback (WT) 10/10→

1.6 i	10/10→	244500 89 / 121	Luc	2428302	[–] 24283 17.6			91069200	ø 200 x 32	
1.6 TD	10/10→	66 / 90	Luc	82512900				97038600		
				92176003	ø 258 x 23 x 44					

FIESTA Saloon (WT) 10/10→

1.4	10/10→	244600 70 / 95	Luc	2428302	[–] 24283 17.6			91069200	ø 200 x 32	
1.6 i	10/10→	89 / 121	Luc	82512900				97038600		
1.6 TD	10/10→	66 / 90		92176003	ø 258 x 23 x 44					

FIESTA Schrägheck (WP, WQ) 04/04→03/09 → FIESTA Hatchback (WP, WQ), Page 416

FIESTA Schrägheck (WT) 10/10→ → FIESTA Hatchback (WT), Page 417

FIESTA Stufenheck (WT) 10/10→ → FIESTA Saloon (WT), Page 417

FOCUS Coupe (LT) 12/07→03/09

2.0	12/07→03/09	244700 107 / 145	Ate	2372301	[–] 23723 18.2		Ate	2413701	[–] 24137 16.7	
			Ate	2372381	[–] 23723 18.2		Ate	2413781	[–] 24137 16.7	
			Ate	82032000			Ate	82062900		
			Ate	82062900			Ate	82503500		
				92141303	ø 300 x 25 x 48.5			92133803	ø 280 x 10.9 x 40.8	

FOCUS Hatchback (LR) 09/02→04/05

1.8 i	09/02→04/05	244800 85 / 115	Ate	2315402	[–] 23154 19.3		Luc	2335301	[–] 23353 14	⊕ rear disc brake
2.0 i	09/02→04/05	96 / 131	Ate	82062900			Luc	82062800		
				92096203	ø 258 x 22 x 43.5			91052500	ø 203.2 x 38	⊕ rear drum brake
							Luc	97014000		
								84052500	bore ø 20.6 ø 203.2 x 38	⊕ rear drum brake
								92088403	ø 253 x 10.3 x 33.2	⊕ rear disc brake
								94022500	ø 203,0 x 44	⊕ rear drum brake
2.0 I ST170	04/03→04/05	244900 127 / 173	Ate	2344004	[–] 23440 17.6		Luc	2335301	[–] 23353 14	
			Ate	82032100			Luc	82062800		
			Ate	82062900						
				92139903	ø 300 x 24 x 44.5					

FOCUS Hatchback (LT) 05/05→03/09

2.0 i	05/05→03/09	245000 107 / 145	Ate	2372301	[–] 23723 18.2		Ate	2413701	[–] 24137 16.7	⊕ rear disc brake
			Ate	2372381	[–] 23723 18.2		Ate	2413781	[–] 24137 16.7	⊕ rear disc brake
			Ate	82032000			Ate	82062900		
			Ate	82062900			Ate	82503500		
				92141303	ø 300 x 25 x 48.5			91064900	ø 228.6 x 42	⊕ rear drum brake
							Lkh	97030900		⊕ rear drum brake
								92133803	ø 280 x 10.9 x 40.8	

		kW / hp											
FOCUS Hatchback (LT) 05/05→03/09													
2.0 i	05/05→03/09	245000 107 / 145								94027400	ø 228,3 x 51		⊕ rear drum brake
2.0 TDCi	04/07→03/09	245100 100 / 136	Ate		2372301	[–] 23723 18.2		Ate		2413701	[–] 24137 16.7		⊕ rear disc brake
			Ate	epad	2372381	[–] 23723 18.2		Ate	epad	2413781	[–] 24137 16.7		⊕ rear disc brake
			Ate		82032000			Ate		82062900			
			Ate		82062900			Ate		82503500			
				PRO	92141303	ø 300 x 25 x 48.5				91064900	ø 228.6 x 42		⊕ rear drum brake
								Lkh		97030900			⊕ rear drum brake
										84064900	bore ø 20.6 ø 228.6 x 42		⊕ rear drum brake
									PRO	92133803	ø 280 x 10.9 x 40.8		
										94027400	ø 228,3 x 51		⊕ rear drum brake
2.5 i XR5 Turbo	04/06→05/08	245200 166 / 225	Ate		2391201	[–] 23912 18.5		Ate		2413701	[–] 24137 16.7		⊕ rear disc brake
					92149100	ø 320 x 25 x 48.5		Ate	epad	2413781	[–] 24137 16.7		⊕ rear disc brake
				PRO	92149103	ø 320 x 25 x 48.5		Ate		82062900			
								Ate		82503500			
									PRO	92133803	ø 280 x 10.9 x 40.8		
FOCUS Hatchback (LV) 03/09→08/11													
2.0 i	03/09→08/11	245300 107 / 146	Ate		2372301	[–] 23723 18.2		Ate		2413701	[–] 24137 16.7		⊕ rear disc brake
			Ate	epad	2372381	[–] 23723 18.2		Ate	epad	2413781	[–] 24137 16.7		⊕ rear disc brake
			Ate		82032000			Ate		82062900			
			Ate		82062900			Ate		82503500			
				PRO	92141303	ø 300 x 25 x 48.5				91064900	ø 228.6 x 42		⊕ rear drum brake
								Lkh		97030900			⊕ rear drum brake
									PRO	92133803	ø 280 x 10.9 x 40.8		
										94027400	ø 228,3 x 51		⊕ rear drum brake
2.0 TDCi	03/09→08/11	245400 100 / 136	Ate		2372301	[–] 23723 18.2		Ate		2413701	[–] 24137 16.7		⊕ rear disc brake
			Ate	epad	2372381	[–] 23723 18.2		Ate	epad	2413781	[–] 24137 16.7		⊕ rear disc brake
			Ate		82032000			Ate		82062900			
			Ate		82062900			Ate		82503500			
				PRO	92141303	ø 300 x 25 x 48.5				91064900	ø 228.6 x 42		⊕ rear drum brake
								Lkh		97030900			⊕ rear drum brake
										84064900	bore ø 20.6 ø 228.6 x 42		⊕ rear drum brake
									PRO	92133803	ø 280 x 10.9 x 40.8		
										94027400	ø 228,3 x 51		⊕ rear drum brake
2.5 i XR5 Turbo	03/09→08/11	245500 166 / 226	Ate		2391201	[–] 23912 18.5		Ate		2413701	[–] 24137 16.7		⊕ rear disc brake
					92149100	ø 320 x 25 x 48.5		Ate	epad	2413781	[–] 24137 16.7		⊕ rear disc brake
				PRO	92149103	ø 320 x 25 x 48.5		Ate		82062900			
								Ate		82503500			
									PRO	92133803	ø 280 x 10.9 x 40.8		
FOCUS Hatchback (LW) 08/11→													
1.6 i 2.0 GDI 2.0 TDCi	08/11→ 08/11→ 08/11→	245600 92 / 125 125 / 170 120 / 163	Ate		2372301	[–] 23723 18.2		Ate		2521201	[–] 25212 16.1		⊕ rear disc brake

kW / hp

FOCUS Hatchback (LW) 08/11→

245600													
1.6 i	08/11→	92 / 125	Ate	epad	2372381	[–] 23723 18.2		Ate	epad	2521281	[–] 25212 16.1	⊕ rear disc brake
2.0 GDI	08/11→	125 / 170	Ate		82032000			Ate		82503500		⊕ rear disc brake
2.0 TDCi	08/11→	120 / 163		PRO	92237703	ø 278 x 25 x 48.6				91079800	ø 228.6 x 42	⊕ rear drum brake
									PRO	92239003	ø 270.9 x 11 x 40.8	⊕ rear disc brake
245700												
2.0	08/12→	184 / 250	Ate		2573601	[–] 25736 17.9		Ate		2521201	[–] 25212 16.1	
				PRO	92262203	ø 320 x 25 x 48.4		Ate	epad	2521281	[–] 25212 16.1	
								Ate		82062900		
								Ate		82503500		
									PRO	92239003	ø 270.9 x 11 x 40.8	

FOCUS Saloon (LR) 09/02→04/05

245800													
1.8 i	09/02→04/05	85 / 115	Ate		2315402	[–] 23154 19.3		Luc		2335301	[–] 23353 14	⊕ rear disc brake
2.0 i	09/02→04/05	96 / 131	Ate		82062900			Luc		82062800		
				PRO	92096203	ø 258 x 22 x 43.5				91052500	ø 203.2 x 38	⊕ rear drum brake
								Luc		97014000		
										84052500	bore ø 20.6 ø 203.2 x 38	⊕ rear drum brake
									PRO	92088403	ø 253 x 10.3 x 33.2	⊕ rear disc brake
										94022500	ø 203,0 x 44	⊕ rear drum brake

FOCUS Saloon (LS, LT) 05/05→03/09

245900													
2.0 i	05/05→03/09	107 / 145	Ate		2372301	[–] 23723 18.2		Ate		2413701	[–] 24137 16.7	⊕ rear disc brake
			Ate	epad	2372381	[–] 23723 18.2		Ate	epad	2413781	[–] 24137 16.7	⊕ rear disc brake
			Ate		82032000			Ate		82062900		
			Ate		82062900			Ate		82503500		
				PRO	92141303	ø 300 x 25 x 48.5				91064900	ø 228.6 x 42	⊕ rear drum brake
								Lkh		97030900		⊕ rear drum brake
									PRO	92133803	ø 280 x 10.9 x 40.8	
										94027400	ø 228,3 x 51	⊕ rear drum brake

FOCUS Saloon (LV) 03/09→08/11

246000													
2.0 i	03/09→08/11	107 / 146	Ate		2372301	[–] 23723 18.2		Ate		2413701	[–] 24137 16.7	⊕ rear disc brake
2.0 TDCi	03/09→08/11	100 / 136	Ate	epad	2372381	[–] 23723 18.2		Ate	epad	2413781	[–] 24137 16.7	⊕ rear disc brake
			Ate		82032000			Ate		82062900		
			Ate		82062900			Ate		82503500		
				PRO	92141303	ø 300 x 25 x 48.5				91064900	ø 228.6 x 42	⊕ rear drum brake
								Lkh		97030900		⊕ rear drum brake
									PRO	92133803	ø 280 x 10.9 x 40.8	
										94027400	ø 228,3 x 51	⊕ rear drum brake

FOCUS Saloon (LW) 08/11→

246100													
1.6 i	08/11→	92 / 125	Ate		2372301	[–] 23723 18.2		Ate		2521201	[–] 25212 16.1	⊕ rear disc brake
2.0 GDI	08/11→	125 / 170	Ate	epad	2372381	[–] 23723 18.2		Ate	epad	2521281	[–] 25212 16.1	⊕ rear disc brake
2.0 TDCi	08/11→	120 / 163	Ate		82032000			Ate		82503500		⊕ rear disc brake
				PRO	92237703	ø 278 x 25 x 48.6				91079800	ø 228.6 x 42	⊕ rear drum brake
									PRO	92239003	ø 270.9 x 11 x 40.8	⊕ rear disc brake

F - H

		kW / hp												
FOCUS Schrägheck (LR) 09/02→04/05 → FOCUS Hatchback (LR), Page 417														
FOCUS Schrägheck (LT) 05/05→03/09 → FOCUS Hatchback (LT), Page 417														
FOCUS Schrägheck (LV) 03/09→08/11 → FOCUS Hatchback (LV), Page 418														
FOCUS Schrägheck (LW) 08/11→ → FOCUS Hatchback (LW), Page 418														
FOCUS Stufenheck (LR) 09/02→04/05 → FOCUS Saloon (LR), Page 419														
FOCUS Stufenheck (LS, LT) 05/05→03/09 → FOCUS Saloon (LS, LT), Page 419														
FOCUS Stufenheck (LV) 03/09→08/11 → FOCUS Saloon (LV), Page 419														
FOCUS Stufenheck (LW) 08/11→ → FOCUS Saloon (LW), Page 419														
KA Hatchback (TA, TB) 11/99→12/03														
1.3	11/99→12/03	246200 44 / 60	Ate		**2310101**	[–] 23101 17.5	→02/00		Luc		**91048800**	ø 180 x 32	Lucas →01/00	
			Ate		**2320001**	[–] 23200 18.8	02/00→		Lkh		**91060000**	ø 180 x 32	02/00→ Lockheed	
			Ate		**82029200**				Lkh		**97009500**		02/00→	
			Ate		**82062900**				Luc		**97010200**		Lucas →01/00	
				PRO	**92075303**	ø 239.5 x 12 x 43	→02/00		Luc		**84048800**	bore ø 17.5 ø 180 x 32	Lucas →01/00	
				PRO	**92051003**	ø 239.5 x 20 x 43	03/00→		Lkh		**84060000**	bore ø 19 ø 180 x 32	Lockheed 02/00→	
											94012900	ø 180,0 x 44	→02/00	
											94018500	ø 180,0 x 44	⊕ ABS →02/00	
KA Schrägheck (TA, TB) 11/99→12/03 → KA Hatchback (TA, TB), Page 420														
KUGA (TE) 05/12→														
1.6 AWD	04/13→	246300 134 / 182	Ate		**2372301**	[–] 23723 18.2	⊕ AUS ⊕ NZ ⊕ J		Ate		**2521201**	[–] 25212 16.1		
			Ate	epad	**2372381**	[–] 23723 18.2	⊕ AUS ⊕ NZ ⊕ J		Ate	epad	**2521281**	[–] 25212 16.1		
			Ate		**2574801**	[–] 25748 18.2			Ate		**82503500**			
			Ate		**82032000**					PRO	**92238903**	ø 279.8 x 11 x 50.8		
				PRO	**92141303**	ø 300 x 25 x 48.5								
2.0 D AWD (BK)	04/13→	246400 120 / 163	Ate		**2573601**	[–] 25736 17.9			Ate		**2521201**	[–] 25212 16.1		
				PRO	**92262203**	ø 320 x 25 x 48.4			Ate	epad	**2521281**	[–] 25212 16.1		
									Ate		**82503500**			
										PRO	**92238903**	ø 279.8 x 11 x 50.8		
2.5 AWD	05/12→	246500 147 / 200	Ate		**2372301**	[–] 23723 18.2			TRW		**2453703**	[–] 24537 15.7		
			Ate	epad	**2372381**	[–] 23723 18.2			Luc		**82073200**			
			Ate		**82032000**				Luc		**82063300**			
			Ate		**82062900**						**92159300**	ø 302 x 11 x 50.8		
				PRO	**92141303**	ø 300 x 25 x 48.5				PRO	**92159303**	ø 302 x 11 x 50.8		
LASER Hatchback (KJ) 10/94→03/99														
1.6 i	10/94→03/99	246600 80 / 109	Sum		**2153901**	[+] 21539 15					**92061700**	ø 250 x 9 x 34.5		
1.8 i	10/94→03/99	92 / 125			**92061600**	ø 257 x 22 x 45								
LASER Hatchback (KN) 03/99→04/01														
1.6 i	03/99→04/01	246700 78 / 106	Sum		**2349002**	[+] 23490 15								
					92071500	ø 235 x 22 x 45								
1.8 i	03/99→04/01	246800 92 / 125	Sum		**2384504**	[+] 23845 16.5					**92130200**	ø 261 x 10 x 40		
LASER Hatchback (KQ) 04/01→09/02														
1.6 i	04/01→09/02	246900 78 / 106	Sum		**2349002**	[+] 23490 15								
					92071500	ø 235 x 22 x 45								
1.8 i	04/01→09/02	247000 92 / 125	Sum		**2384504**	[+] 23845 16.5					**92130200**	ø 261 x 10 x 40		

→

		kW / hp											
LASER Hatchback (KQ) 04/01→09/02													
1.8 i	04/01→09/02	247000 92 / 125		92103100	ø 257 x 24 x 47								
2.0 i	04/01→09/02	247100 98 / 133	Sum	2384504	[+] 23845 16.5				92062100	ø 261 x 10 x 40.2			
				92062000	ø 258 x 24 x 48.5								
LASER Saloon (KJ) 10/94→03/99													
1.6 i	10/94→03/99	247200 80 / 109	Sum	2153901	[+] 21539 15				92061700	ø 250 x 9 x 34.5			
1.8 i	10/94→03/99	92 / 125		92061600	ø 257 x 22 x 45								
LASER Saloon (KN) 03/99→04/01													
1.6 i	03/99→04/01	247300 78 / 106	Sum	2349002	[+] 23490 15								
				92071500	ø 235 x 22 x 45								
1.8 i	03/99→04/01	247400 92 / 125	Sum	2384504	[+] 23845 16.5				92130200	ø 261 x 10 x 40			
LASER Saloon (KQ) 04/01→09/02													
1.6 i	04/01→09/02	247500 78 / 106	Sum	2349002	[+] 23490 15								
				92071500	ø 235 x 22 x 45								
1.8 i	04/01→09/02	247600 92 / 125	Sum	2384504	[+] 23845 16.5				92130200	ø 261 x 10 x 40			
				92103100	ø 257 x 24 x 47								
LASER Schrägheck (KJ) 10/94→03/99 → LASER Hatchback (KJ), Page 420													
LASER Schrägheck (KN) 03/99→04/01 → LASER Hatchback (KN), Page 420													
LASER Schrägheck (KQ) 04/01→09/02 → LASER Hatchback (KQ), Page 420													
LASER Stufenheck (KJ) 10/94→03/99 → LASER Saloon (KJ), Page 421													
LASER Stufenheck (KN) 03/99→04/01 → LASER Saloon (KN), Page 421													
LASER Stufenheck (KQ) 04/01→09/02 → LASER Saloon (KQ), Page 421													
LTD Saloon (DL) 09/96→06/99													
4.0	09/96→06/99	247700 157 / 214		2585401	[–] 25854 12.9		Luc		2324204	[–] 23242 14.2			
5.0 V8	09/96→06/99	165 / 224											
LTD Stufenheck (DL) 09/96→06/99 → LTD Saloon (DL), Page 421													
MONDEO Estate (HB, HC, HD) 07/95→12/99													
2.0 i	07/95→12/99	247800 97 / 132	Ate	2139408	[–] 21394 18.5		Bos		2341007	[–] 23410 15.7	⊕ rear disc brake		
			Ate	2307104	[+] 23071 18.5		Bos		2341008	[+] 23410 15.7	⊕ rear disc brake		
			Ate	82032100			Bos		82031600		⊕ rear disc brake		
			Ate	82062900					91049400	ø 228.6 x 45	⊕ rear drum brake		
			PRO	92063503	ø 260 x 24 x 47	⊕ rim size 14"	Luc		97009200		⊕ rear drum brake		
									84049401	bore ø 22.2 ø 228.6 x 45	⊕ rear drum brake		
								PRO	92063603	ø 253 x 20 x 43.7	⊕ rear disc brake		
									94013100	ø 228,6 x 54	⊕ rear drum brake		
MONDEO Estate (MB) 06/09→													
2.3 i 16 V	06/09→	247900 118 / 160	Ate	2412301	[–] 24123 20.3	16" -brake	TRW		2453703	[–] 24537 15.7			
			Ate	2414201	[–] 24142 19.8	16,5" -brake	Luc		82073200				
			PRO	92196903	ø 300 x 28 x 52				92159300	ø 302 x 11 x 50.8			
								PRO	92159303	ø 302 x 11 x 50.8			
MONDEO Hatchback (HA, HB, HC) 07/95→02/00													
2.0	07/95→02/00	248000 96 / 131	Ate	2139408	[–] 21394 18.5		Bos		2341007	[–] 23410 15.7	⊕ rear disc brake		
			Ate	2307104	[+] 23071 18.5		Bos		2341008	[+] 23410 15.7	⊕ rear disc brake		
			Ate	82032100			Bos		82031600		⊕ rear disc brake		
			Ate	82062900					91049400	ø 228.6 x 45	⊕ rear drum brake		

kW / hp												
MONDEO Hatchback (HA, HB, HC) 07/95→02/00												
248000												
2.0 07/95→02/00 96 / 131			92075400	ø 278 x 24 x 47	⊕ rim size 15"	Luc		97009200		⊕ rear drum brake
		PRO	92063503	ø 260 x 24 x 47	⊕ rim size 14"			84049401	bore ø 22.2 ø 228.6 x 45	⊕ rear drum brake
							PRO	92063603	ø 253 x 20 x 43.7	⊕ rear disc brake
								94013100	ø 228,6 x 54	⊕ rear drum brake
MONDEO Hatchback (HE) 02/00→04/01												
248100												
2.0 02/00→04/01 94 / 128	Bos		2327904	[–] 23279 18.4		Bos		2355701	[–] 23557 17.2	
	Bos		82063800			Bos		82054300		
	Bos		82510100				PRO	92109703	ø 280 x 12 x 34	
		PRO	92109603	ø 300 x 24 x 47						
MONDEO Hatchback (MA, MB) 03/07→												
248200												
2.0 TDCi 03/07→ 103 / 140	Ate		2412301	[–] 24123 20.3	16" -brake	TRW		2453703	[–] 24537 15.7	
2.3 i 16 V 03/07→ 118 / 160	Ate		2414201	[–] 24142 19.8	16,5" -brake	Luc		82073200		
XR5 Turbo 03/07→ 162 / 220		PRO	92196903	ø 300 x 28 x 52				92159300	ø 302 x 11 x 50.8	
							PRO	92159303	ø 302 x 11 x 50.8	
MONDEO Kombi (HB, HC, HD) 07/95→12/99 → MONDEO Estate (HB, HC, HD), Page 421												
MONDEO Kombi (MB) 06/09→ → MONDEO Estate (MB), Page 421												
MONDEO Saloon (HA, HB) 07/95→02/00												
248300												
2.0 07/95→02/00 96 / 131	Ate		2139408	[–] 21394 18.5		Bos		2341007	[–] 23410 15.7	⊕ rear disc brake
	Ate		2307104	[+] 23071 18.5		Bos		2341008	[+] 23410 15.7	⊕ rear disc brake
	Ate		82032100			Bos		82031600		⊕ rear disc brake
	Ate		82062900					91049400	ø 228.6 x 45	⊕ rear drum brake
			92075400	ø 278 x 24 x 47	⊕ rim size 15"	Luc		97009200		⊕ rear drum brake
		PRO	92063503	ø 260 x 24 x 47	⊕ rim size 14"			84049401	bore ø 22.2 ø 228.6 x 45	⊕ rear drum brake
							PRO	92063603	ø 253 x 20 x 43.7	⊕ rear disc brake
								94013100	ø 228,6 x 54	⊕ rear drum brake
MONDEO Saloon (HE) 02/00→04/01												
248400												
2.0 02/00→04/01 94 / 128	Bos		2327904	[–] 23279 18.4		Bos		2355701	[–] 23557 17.2	
	Bos		82063800			Bos		82054300		
	Bos		82510100				PRO	92109703	ø 280 x 12 x 34	
		PRO	92109603	ø 300 x 24 x 47						
248500												
2.5 02/00→04/01 125 / 170	Ate		2139408	[–] 21394 18.5		Bos		2341007	[–] 23410 15.7	
	Ate		2307104	[+] 23071 18.5		Bos		2341008	[+] 23410 15.7	
	Ate		82032100			Bos		82031600		
	Ate		82062900				PRO	92063603	ø 253 x 20 x 43.7	
			92075400	ø 278 x 24 x 47						
MONDEO Saloon (MA, MB) 03/07→												
248600												
2.0 TDCi 03/07→ 103 / 140	Ate		2412301	[–] 24123 20.3	16" -brake	TRW		2453703	[–] 24537 15.7	
2.3 i 16 V 03/07→ 118 / 160	Ate		2414201	[–] 24142 19.8	16,5" -brake	Luc		82073200		
		PRO	92196903	ø 300 x 28 x 52				92159300	ø 302 x 11 x 50.8	
							PRO	92159303	ø 302 x 11 x 50.8	
MONDEO Schrägheck (HA, HB, HC) 07/95→02/00 → MONDEO Hatchback (HA, HB, HC), Page 421												
MONDEO Schrägheck (HE) 02/00→04/01 → MONDEO Hatchback (HE), Page 422												
MONDEO Schrägheck (MA, MB) 03/07→ → MONDEO Hatchback (MA, MB), Page 422												

		kW / hp										
MONDEO Stufenheck (HA, HB) 07/95→02/00 → MONDEO Saloon (HA, HB), Page 422												
MONDEO Stufenheck (HE) 02/00→04/01 → MONDEO Saloon (HE), Page 422												
MONDEO Stufenheck (MA, MB) 03/07→ → MONDEO Saloon (MA, MB), Page 422												
MUSTANG Cabriolet 09/93→ → MUSTANG Convertible, Page 423												
MUSTANG Cabriolet 12/05→ → MUSTANG Convertible, Page 423												
MUSTANG Convertible 09/93→												
		248700	Wag		**2452501**	[+] 24525 15.5						
3.8	09/93→	112 / 152										
4.9 V8	09/93→	160 / 218										
MUSTANG Convertible 12/05→												
		248800			**2451301**	[–] 24513 17.8						
4.0	12/05→	157 / 214										
4.6 V8	12/05→	224 / 305										
5.4 V8	01/06→	355 / 483										
MUSTANG Coupe 09/93→												
		248900	Wag		**2452501**	[+] 24525 15.5						
3.8	09/93→	112 / 152										
3.8	01/94→05/99	108 / 147										
4.6 V8	11/95→05/99	160 / 218										
4.6 V8	11/95→05/99	165 / 224										
4.6 V8	11/95→05/99	225 / 306										
4.6 V8	06/99→10/00	192 / 261										
4.9 V8	09/93→	160 / 218										
MUSTANG Coupe 12/04→												
		249000			**2451301**	[–] 24513 17.8						
4.0	12/04→	157 / 214										
4.6 V8	12/04→	224 / 305										
5.4 V8	01/06→	355 / 483										
RANGER Pickup (PJ) 11/06→03/09												
		249100	Kel		**2354001**	[+] 23540 16.5						
2.5 TDdi	11/06→03/09	105 / 143			**92223000**	ø 288 x 28 x 70						
					92236300	ø 256 x 24 x 24	01/07→					
				PRO	**92223003**	ø 288 x 28 x 70						
		249200	Kel		**2354001**	[+] 23540 16.5						
2.5 TDdi All-wheel Drive	11/06→03/09	105 / 143										
		249300	Tok		**2435301**	[+] 24353 16.9						
3.0	11/06→03/09	115 / 156										
3.0 All-wheel Drive	11/06→03/09	115 / 156	Kel		**82511700**							
					92223000	ø 288 x 28 x 70						
					92236300	ø 256 x 24 x 24	01/07→					
				PRO	**92223003**	ø 288 x 28 x 70						
RANGER Pick-up (PJ) 11/06→03/09 → RANGER Pickup (PJ), Page 423												
RANGER Pickup (PK) 03/09→11/11												
		249400	Tok		**2435301**	[+] 24353 16.9						
2.5 TDdi	03/09→11/11	105 / 143										
3.0 TDdi 4x4	03/09→11/11	115 / 156	Kel		**82511700**							
RANGER Pick-up (PK) 03/09→11/11 → RANGER Pickup (PK), Page 423												
RANGER Pickup (PX) 11/11→												
		249500			**2563201**	[+] 25632 16.4						
2.2 TDdi	11/11→	110 / 150										
2.2 TDdi 4x4	11/11→	110 / 150										
2.5 i	11/11→	122 / 166		PRO	**92253403**	ø 302 x 32 x 61						
3.2 TDdi 4x4	11/11→	147 / 200										
RANGER Pick-up (PX) 11/11→ → RANGER Pickup (PX), Page 423												
RANGER Platform/Chassis (PJ) 11/06→03/09												
		249600	Kel		**2354001**	[+] 23540 16.5						
2.5 TDdi	11/06→03/09	105 / 143			**92223000**	ø 288 x 28 x 70						
					92236300	ø 256 x 24 x 24	01/07→					
				PRO	**92223003**	ø 288 x 28 x 70						
		249700	Tok		**2435301**	[+] 24353 16.9						
3.0 TDdi 4x4	11/06→03/09	115 / 156										
			Kel		**82511700**							
					92236300	ø 256 x 24 x 24	01/07→					

		kW / hp											
RANGER Platform/Chassis (PK) 03/09→11/11													
		249800	Tok		**2435301**	[+] 24353 16.9							
2.5 TDdi 4x4	03/09→11/11	105 / 143											
3.0 TDdi	03/09→11/11	115 / 156	Kel		**82511700**								
RANGER Platform/Chassis (PX) 11/11→													
		249900			**2563201**	[+] 25632 16.4							
2.2 TDdi	11/11→	110 / 150											
2.2 TDdi 4x4	11/11→	110 / 150		PRO	**92253403**	ø 302 x 32 x 61							
2.5 i	11/11→	122 / 166											
3.2 TDdi 4x4	11/11→	147 / 200											
RANGER Pritsche/Fahrgestell (PJ) 11/06→03/09 → RANGER Platform/Chassis (PJ), Page 423													
RANGER Pritsche/Fahrgestell (PK) 03/09→11/11 → RANGER Platform/Chassis (PK), Page 424													
RANGER Pritsche/Fahrgestell (PX) 11/11→ → RANGER Platform/Chassis (PX), Page 424													
TERRITORY (SX, SY) 05/04→05/11													
		250000			**2482901**	[–] 24829 14.7							
4.0	05/04→05/11	182 / 248											
4.0 AWD	05/04→05/11	190 / 258											
		250100	PBR		**2419401**	[+] 24194 15.3							
4.0 Turbo AWD	07/06→05/11	245 / 333											
TERRITORY (SZ) 05/11→													
		250200			**2482901**	[–] 24829 14.7							
2.7 V6 TDCi	05/11→	140 / 190											
2.7 V6 TDCi 4x4	05/11→	140 / 190											
4.0 i	05/11→	195 / 265											
TICKFORD TE 50 Saloon (AU) 10/99→12/02													
		250300	PBR		**2419401**	[+] 24194 15.3							
4.9 i V8	10/99→10/00	200 / 272											
4.9 i V8	10/00→11/01	220 / 299											
5.6 i V8	11/01→12/02	250 / 340											
TICKFORD TE 50 Stufenheck (AU) 10/99→12/02 → TICKFORD TE 50 Saloon (AU), Page 424													
TICKFORD TL 50 Saloon (AU) 10/99→12/02													
		250400	PBR		**2419401**	[+] 24194 15.3							
4.9 i V8	10/99→10/00	200 / 272											
4.9 i V8	10/00→11/01	220 / 299											
5.6 i V8	11/01→12/02	250 / 340											
TICKFORD TL 50 Stufenheck (AU) 10/99→12/02 → TICKFORD TL 50 Saloon (AU), Page 424													
TICKFORD TS 50 Saloon (AU) 10/99→12/02													
		250500	PBR		**2419401**	[+] 24194 15.3							
4.9 i V8	10/99→10/00	200 / 272											
4.9 i V8	10/00→11/01	220 / 299											
5.6 i V8	11/01→12/02	250 / 340											
TICKFORD TS 50 Stufenheck (AU) 10/99→12/02 → TICKFORD TS 50 Saloon (AU), Page 424													
TRANSIT Box (VF) 06/94→03/00													
		250600	Ben		**2146901**	[–] 21469 19	⊕ rim size 15" →08/98			**91048500**	ø 254 x 52		
2.0	06/94→03/00	84 / 114	Ben		**2147001**	[–] 21470 19	⊕ rim size 14" →08/98			**91048600**	ø 280 x 65		
			Ben		**2146902**	[+] 21469 19	⊕ rim size 15" 09/98→	Lkh		**97007800**		Ø 254 mm	
			Ben		**2147002**	[+] 21470 19	⊕ rim size 14" 09/98→	Lkh		**97007900**		Ø 280 mm	
					92088100	ø 254 x 24 x 43	⊕ rim size 14"			**83048500**	bore ø 22.2 ø 254 x 52		
					92088200	ø 270 x 24.5 x 43	⊕ rim size 15"			**83048601**	bore ø 20.6 ø 280 x 65		
										83048602	bore ø 25.4 ø 280 x 65		
										94013200	ø 254,0 x 57.5	Ø 254 mm	
										94013300	ø 280,0 x 75.5	Ø 280 mm	
TRANSIT Box (VH, VJ) 01/00→09/06													
		250700	Bos		**2357701**	[+] 23577 18.5				**91058600**	ø 280 x 65		
2.3	08/00→09/06	107 / 146	Bos		**82063900**					**84058600**	bore ø 25.4 ø 280 x 65		
				PRO	**92103803**	ø 294 x 24.5 x 43				**94024600**	ø 280 x 80.5	⊕ rim 5 hole	
										94024800	ø 280 x 75.5	⊕ rim 6 hole	
		250800	Bos		**2357701**	[+] 23577 18.5				**91058600**	ø 280 x 65		
2.4 D	01/00→09/06	66 / 90											
2.4 D	01/00→09/06	88 / 120	Bos		**82063900**					**97012200**			
2.4 D	07/01→09/06	92 / 125		PRO	**92103803**	ø 294 x 24.5 x 43				**84058600**	bore ø 25.4 ø 280 x 65		
										94024600	ø 280 x 80.5	⊕ rim 5 hole	

→

		kW / hp									
TRANSIT Box (VH, VJ) 01/00→09/06											
		250800									
2.4 D	01/00→09/06	66 / 90							94024800	ø 280 x 75.5	⊕ rim 6 hole
2.4 D	01/00→09/06	88 / 120									
2.4 D	07/01→09/06	92 / 125									
TRANSIT Box (VM) 07/06→											
		250900	Bos		2448401	[+] 24484 18.9	BM 330 / 350	Bos	2448601	[+] 24486 17.3	⊕ rear disc brake BM 260/280/300/330/350
2.2 TD	09/06→	81 / 110									
2.2 TD	01/10→	85 / 116	Bos		2448501	[+] 24485 18.9	BM 260 / 280 / 300	Bre	2912307	[+] 29123 20.3	⊕ rear disc brake BM 460
			Bos		82054200			Bos	82054300		⊕ rear disc brake BM 260/280/300/330/350
				PRO	92151803	ø 280 x 28 x 54.4	BM 260 / 280 / 300		91059100	ø 254 x 52	⊕ rear drum brake BM 260 / 280 / 300
				PRO	92151903	ø 300 x 28 x 54.4	BM 330 / 350		97012200		⊕ rear drum brake BM 260 / 280 / 300
									84059100	bore ø 25.4 ø 254 x 52	⊕ rear drum brake BM 260 / 280 / 300
									92152000	ø 280 x 16 x 16.3	⊕ rear disc brake
								ABS	92159100	ø 280 x 16 x 69	⊕ rear disc brake ⊕ dual tyres
									94024700	ø 254 x 57.5	⊕ rear drum brake BM 260 / 280 / 300
		251000	Bos		2448401	[+] 24484 18.9		Bos	2448601	[+] 24486 17.3	BM 260/280/300/330/350
2.3 i	09/06→03/08	104 / 141									
2.4 D	07/06→	74 / 100		PRO	92151903	ø 300 x 28 x 54.4		Bre	2912307	[+] 29123 20.3	BM 460
2.4 D	07/06→	85 / 115									
2.4 TD	07/06→09/06	103 / 140						Bos	82054300		BM 260/280/300/330/350
2.4 TD All-wheel Drive	11/06→	103 / 140							92152000	ø 280 x 16 x 16.3	
TRANSIT Bus (VF, VG) 06/94→06/00											
		251100	Ben		2146901	[–] 21469 19	⊕ rim size 15" →08/98		91048500	ø 254 x 52	
2.0	06/94→03/00	84 / 114									
2.0	09/95→03/00	84 / 114	Ben		2147001	[–] 21470 19	⊕ rim size 14" →08/98		91048600	ø 280 x 65	
2.5	07/94→03/00	74 / 100									
2.5	08/94→06/00	55 / 75									
2.5	01/95→03/00	63 / 85	Ben		2146902	[+] 21469 19	⊕ rim size 15" 09/98→	Lkh	97007800		Ø 254 mm
2.5	08/97→03/00	85 / 116									
			Ben		2147002	[+] 21470 19	⊕ rim size 14" 09/98→	Lkh	97007900		Ø 280 mm
					92088100	ø 254 x 24 x 43	⊕ rim size 14"		83048500	bore ø 22.2 ø 254 x 52	
					92088200	ø 270 x 24.5 x 43	⊕ rim size 15"		83048601	bore ø 20.6 ø 280 x 65	
									83048602	bore ø 25.4 ø 280 x 65	
									94013200	ø 254,0 x 57.5	Ø 254 mm
									94013300	ø 280,0 x 75.5	Ø 280 mm
TRANSIT Bus (VH, VJ) 01/00→09/06											
		251200	Bos		2357701	[+] 23577 18.5			91058600	ø 280 x 65	
2.3	08/00→09/06	107 / 146									
2.4 D	01/00→09/06	55 / 75	Bos		82063900				84058600	bore ø 25.4 ø 280 x 65	
2.4 D	01/00→09/06	66 / 90									
2.4 D	01/00→09/06	88 / 120									
2.4 D	07/01→09/06	92 / 125		PRO	92103803	ø 294 x 24.5 x 43			94024600	ø 280 x 80.5	⊕ rim 5 hole
2.4 D	03/04→09/06	85 / 115									
2.4 D	03/04→09/06	101 / 137							94024800	ø 280 x 75.5	⊕ rim 6 hole
TRANSIT Bus (VM) 07/06→											
		251300	Bos		2448401	[+] 24484 18.9		Bos	2448601	[+] 24486 17.3	BM 260/280/300/330/350
2.4 D	07/06→	74 / 100									
2.4 D	07/06→	85 / 115		PRO	92151903	ø 300 x 28 x 54.4		Bre	2912307	[+] 29123 20.3	BM 460
2.4 TD	07/06→	103 / 140									
2.4 TD All-wheel Drive	11/06→	103 / 140						Bos	82054300		BM 260/280/300/330/350
									92152000	ø 280 x 16 x 16.3	
TRANSIT Kasten (VF) 06/94→03/00 → TRANSIT Box (VF), Page 424											
TRANSIT Kasten (VH, VJ) 01/00→09/06 → TRANSIT Box (VH, VJ), Page 424											
TRANSIT Kasten (VM) 07/06→ → TRANSIT Box (VM), Page 425											
TRANSIT Platform/Chassis (VF, VG) 08/94→03/00											
		251400	Ben		2146901	[–] 21469 19	⊕ rim size 15" →08/98		91048500	ø 254 x 52	
2.0	08/94→03/00	84 / 114									
2.5	08/94→03/00	52 / 71	Ben		2147001	[–] 21470 19	⊕ rim size 14" →08/98		91048600	ø 280 x 65	
2.5	08/94→03/00	56 / 76									
2.5	08/94→03/00	63 / 85									
2.5	08/94→03/00	74 / 101	Ben		2146902	[+] 21469 19	⊕ rim size 15" 09/98→	Lkh	97007800		Ø 254 mm

FORD AUSTRALIA

FORD AUSTRALIA

TRANSIT Platform/Chassis (VF, VG) 08/94→03/00

			kW / hp											
			251400	Ben		2147002	[+] 21470 19	⊕ rim size 14" 09/98→	Lkh		97007900		Ø 280 mm
2.0	08/94→03/00	84 / 114											
2.5	08/94→03/00	52 / 71											
2.5	08/94→03/00	56 / 76				92088100	ø 254 x 24 x 43	⊕ rim size 14"			83048500	bore ø 22.2 ø 254 x 52	
2.5	08/94→03/00	63 / 85											
2.5	08/94→03/00	74 / 101				92088200	ø 270 x 24.5 x 43	⊕ rim size 15"			83048601	bore ø 20.6 ø 280 x 65	
											83048602	bore ø 25.4 ø 280 x 65	
											94013200	ø 254,0 x 57.5	Ø 254 mm
											94013300	ø 280,0 x 75.5	Ø 280 mm
			251500	Ben		2146902	[+] 21469 19	⊕ rim size 15"			91048500	ø 254 x 52	
2.5	10/98→03/00	55 / 75											
2.5	05/99→03/00	85 / 116		Ben		2147002	[+] 21470 19	⊕ rim size 14"			91048600	ø 280 x 65	
						92088100	ø 254 x 24 x 43	⊕ rim size 14"	Lkh		97007800		Ø 254 mm
						92088200	ø 270 x 24.5 x 43	⊕ rim size 15"	Lkh		97007900		Ø 280 mm
											83048500	bore ø 22.2 ø 254 x 52	
											83048601	bore ø 20.6 ø 280 x 65	
											83048602	bore ø 25.4 ø 280 x 65	
											94013200	ø 254,0 x 57.5	Ø 254 mm
											94013300	ø 280,0 x 75.5	Ø 280 mm

TRANSIT Platform/Chassis (VH, VJ) 01/00→09/06

			251600	Bos		2357701	[+] 23577 18.5				91058600	ø 280 x 65	
2.3	08/00→09/06	107 / 146											
2.4 D	01/00→09/06	55 / 75		Bos		82063900					84058600	bore ø 25.4 ø 280 x 65	
2.4 D	01/00→09/06	66 / 90											
2.4 D	01/00→09/06	88 / 120											
2.4 D	08/00→08/03	88 / 120			PRO	92103803	ø 294 x 24.5 x 43				94024600	ø 280 x 80.5	⊕ rim 5 hole
2.4 D	07/01→09/06	92 / 125											
2.4 D	03/04→07/06	85 / 115											
2.4 D	03/04→09/06	101 / 137									94024800	ø 280 x 75.5	⊕ rim 6 hole

TRANSIT Platform/Chassis (VM) 07/06→

			251700	Bos		2448401	[+] 24484 18.9		Bos		2448601	[+] 24486 17.3	BM 260/280/300/330/350
2.4 D	07/06→	74 / 100											
2.4 D	07/06→	85 / 115			PRO	92151903	ø 300 x 28 x 54.4		Bre		2912307	[+] 29123 20.3	BM 460
2.4 TD	07/06→	103 / 140											
2.4 TD All-wheel Drive	11/06→	103 / 140							Bos		82054300		BM 260/280/300/330/350
											92152000	ø 280 x 16 x 16.3	

TRANSIT Pritsche/Fahrgestell (VF, VG) 08/94→03/00 → TRANSIT Platform/Chassis (VF, VG), Page 425

TRANSIT Pritsche/Fahrgestell (VH, VJ) 01/00→09/06 → TRANSIT Platform/Chassis (VH, VJ), Page 426

TRANSIT Pritsche/Fahrgestell (VM) 07/06→ → TRANSIT Platform/Chassis (VM), Page 426

FORD USA

FORD USA

CONTOUR 09/96→08/00

			kW / hp											
			251800	Ate		2135803	[–] 21358 19.8	→12/97	Bos		2341007	[–] 23410 15.7	
2.0	09/96→08/00	96 / 131											
2.5	09/96→08/00	127 / 173		Ate		2139408	[–] 21394 18.5	12/97→	Bos		2341008	[+] 23410 15.7	
2.5 SVT	09/96→08/00	149 / 203											
				Ate		2191003	[+] 21910 19.8	→12/97	Bos		82031600		
				Ate		2307104	[+] 23071 18.5	12/97→		PRO	92063603	ø 253 x 20 x 43.7	
				Ate		82032100							
				Ate		82062900							
						92075400	ø 278 x 24 x 47						

ECOSPORT 06/02→

			251900	Ate		2360406	[–] 23604 18.8						
1.0 XL Supercharged	06/02→	70 / 95											
1.4 D	04/03→	50 / 68											
1.6	06/02→	78 / 106											
1.6	06/05→	77 / 105											
1.6 Hybrid	06/02→	82 / 111											

→

		kW / hp											
ECOSPORT 06/02→													
2.0	09/03→12/08	60 / 82	Ate		**2360406**	[–] 23604 18.8							
2.0	10/07→	101 / 137											
2.0 Flex	11/08→	104 / 141											
2.0 Flex All-wheel Drive	10/07→	107 / 146											
2.0 XLT	06/02→	105 / 143											
2.0 XLT 4x4	06/02→	105 / 143											
EDGE (U387) 08/06→													
		252000	Sum		**2454401**	[+] 24544 17.5							
2.0	09/11→	179 / 243											
2.0 AWD	09/11→	179 / 243											
3.7	09/10→12/13	227 / 309											
3.7 AWD	09/10→12/13	227 / 309											
		252100	Sum		**2454401**	[+] 24544 17.5					**2454501**	[–] 24545 17.9	
3.5	08/06→	197 / 168											
3.5	01/10→	213 / 290											
3.5 4WD	08/06→	197 / 168											
3.5 4WD	01/10→	213 / 290											
ESCAPE 09/00→12/07													
		252200						Ate		**2467001**	[–] 24670 17.1	2003-12→ ⊕ rear disc brake	
2.0	09/00→12/04	95 / 129											
		252300	Ate		**2378701**	[–] 23787 18.3	⊕ rear drum brake	Ate		**2467001**	[–] 24670 17.1	⊕ rear disc brake	
2.0	01/01→02/04	91 / 124											
2.3	10/01→03/04	114 / 155	Ate		**2443901**	[–] 24439 15	⊕ rear disc brake			**91060600**	ø 228.6 x 43		
2.3 4x4	10/01→03/04	114 / 155											
2.3 Hybrid 4x4	03/01→07/07	95 / 129											
2.3 Hybrid 4x4	04/04→07/07	110 / 150	Ate		**82029300**			Sum		**97015900**			
3.0 4x4	01/01→04/04	145 / 197											
3.0 4x4	05/04→07/07	152 / 207	Ate		**82062900**				PRO	**92197803**	ø 302 x 12 x 56	⊕ rear disc brake	
				PRO	**92146503**	ø 278 x 24 x 47	⊕ rear drum brake						
				PRO	**92197703**	ø 303 x 26 x 47	⊕ rear disc brake						
		252400	Ate		**2443901**	[–] 24439 15	2003-09→	Ate		**2467001**	[–] 24670 17.1	2003-12→ ⊕ rear disc brake	
2.0 4WD	09/00→12/04	95 / 129											
		252500						Ate		**2467001**	[–] 24670 17.1	⊕ rear disc brake	
3.0	02/04→03/05	145 / 197											
3.0	02/04→03/05	149 / 203											
		252600						Ate		**2467001**	[–] 24670 17.1	→05/06	
3.0	09/05→12/07	149 / 203											
		252700						Ate		**2467001**	[–] 24670 17.1		
3.0 4WD	09/05→12/07	149 / 203											
ESCAPE 08/07→													
		252800	Ate		**2443901**	[–] 24439 15		Ate		**2467001**	[–] 24670 17.1	⊕ rear disc brake	
2.3	08/07→	99 / 135											
2.3 AWD	08/07→	99 / 135											
2.3 AWD	08/07→	110 / 150											
3.0	09/07→12/08	149 / 203											
3.0 4WD	09/07→12/08	149 / 203											
3.0 4WD	09/08→12/09	179 / 243											
3.0 AWD	08/07→	149 / 203											
		252900	Ate		**2443901**	[–] 24439 15		Kel		**2438101**	[–] 24381 14.6		
2.3	08/07→	110 / 150											
2.5	01/09→	126 / 171											
3.0	01/09→	176 / 239											
		253000	Ate		**2443901**	[–] 24439 15							
2.5 AWD	01/09→	114 / 155											
EXPLORER (U2) 01/93→04/03													
		253100	Ake		**2506801**	[–] 25068 16.4	10/00→	Kel		**2438101**	[–] 24381 14.6	10/01→	
4.0	09/96→08/02	152 / 207											
			Wag		**2347201**	[+] 23472 17	→09/00	Kel		**2362701**	[+] 23627 15	10/99→	
								Kel		**2437701**	[+] 24377 14.6	→12/00	
		253200	Ake		**2506801**	[–] 25068 16.4	10/00→	Kel		**2438101**	[–] 24381 14.6	10/01→ →08/02	
4.0	10/99→04/03	150 / 204											
			Wag		**2347201**	[+] 23472 17	→09/00	Kel		**2362701**	[+] 23627 15		
								Kel		**2437701**	[+] 24377 14.6	→12/00	
		253300	Wag		**2347201**	[+] 23472 17	→06/01	Kel		**2438101**	[–] 24381 14.6	10/01→ →08/02	
4.0 All-wheel Drive	10/99→04/03	150 / 204											
								Kel		**2362701**	[+] 23627 15		
								Kel		**2437701**	[+] 24377 14.6	→12/00	
		253400	Ben		**2183001**	[–] 21830 15.7	→10/94	Kel		**2362701**	[+] 23627 15	10/99→	
4.0 V6 All-wheel Drive	01/93→	121 / 165											
			Wag		**2347201**	[+] 23472 17	10/94→ →06/01	Kel		**2437701**	[+] 24377 14.6	→12/00	
				PRO	**92169003**	ø 285 x 26 x 66.5				**92169100**	ø 285 x 12 x 58.6		
										91071500	ø 184 x 30	11/94→ →08/98	

kW / hp													
EXPLORER (U2) 01/93→04/03													
253500													
4.0 V6 All-wheel Drive	03/95→	115 / 156	Wag		**2347201**	[+] 23472 17	→06/01	Kel		**2362701**	[+] 23627 15	10/99→	
4.9 V6 All-wheel Drive	01/96→	157 / 213		PRO	**92169003**	ø 285 x 26 x 66.5		Kel		**2437701**	[+] 24377 14.6	→12/00	
										92169100	ø 285 x 12 x 58.6		
										91071500	ø 184 x 30	→08/98	
253600			Ake		**2506801**	[–] 25068 16.4	10/99→	Kel		**2438101**	[–] 24381 14.6	10/01→ →08/02	
4.0 V6 All-wheel Drive	10/96→	152 / 207	Wag		**2347201**	[+] 23472 17	→09/99	Kel		**2362701**	[+] 23627 15	10/99→	
				PRO	**92169003**	ø 285 x 26 x 66.5		Kel		**2437701**	[+] 24377 14.6	→12/00	
										92169100	ø 285 x 12 x 58.6		
										91071500	ø 184 x 30	→08/98	
253700			Wag		**2347201**	[+] 23472 17	→06/01	Kel		**2438101**	[–] 24381 14.6	10/01→ →04/03	
4.0 V6 All-wheel Drive	10/98→	150 / 204		PRO	**92169003**	ø 285 x 26 x 66.5		Kel		**2362701**	[+] 23627 15	10/99→	
								Kel		**2437701**	[+] 24377 14.6	→12/00	
										92169100	ø 285 x 12 x 58.6		
EXPLORER 09/00→													
253800								Kel		**2438101**	[–] 24381 14.6	2000-11→ →2005-07	
4.0	09/00→12/03	153 / 208											
4.0 4WD	09/00→12/02	153 / 208											
4.0 Flexfuel	09/01→12/05	157 / 214											
4.0 Flexfuel	09/03→12/04	157 / 214											
4.0 Flexfuel 4WD	09/03→12/04	157 / 214											
4.0 Flexfuel AWD	09/01→12/05	157 / 214											
4.6	05/03→	178 / 242											
253900			Ake		**2506801**	[–] 25068 16.4		Kel		**2438101**	[–] 24381 14.6	⊕ ABS	
4.0	09/01→	157 / 213											
4.0 4x4	09/01→	157 / 213											
4.0 Flex-Fuel 4WD	01/02→	156 / 212		PRO	**92169003**	ø 285 x 26 x 66.5				**91075700**	ø 254 x 65	⊖ ABS	
4.6	05/06→	218 / 296											
4.6 4x4	05/03→	178 / 242								**92169100**	ø 285 x 12 x 58.6		
4.6 4x4	05/06→	218 / 296											
EXPLORER Stripped Chassis 09/01→12/03													
254000								Kel		**2438101**	[–] 24381 14.6		
4.0 Flexfuel	09/01→12/03	157 / 214											
4.0 Flexfuel 4WD	09/01→12/03	157 / 214											
F-150 10/96→11/03													
254100			Wag		**2475701**	[+] 24757 16.3		Kel		**2475301**	[–] 24753 16.5		
4.2	10/96→11/03	148 / 201											
4.2	09/98→10/01	157 / 213											
F-150 10/03→09/07													
254200			Wag		**2475701**	[+] 24757 16.3		Kel		**2475301**	[–] 24753 16.5		
4.2	10/03→09/07	157 / 213											
4.2 4x4	10/03→09/07	157 / 213											
FIVE HUNDRED 08/04→12/07													
254300					**2458002**	[–] 24580 17		Bos		**2426001**	[–] 24260 16.3		
3.0	08/04→	151 / 205											
3.0 4x4	08/04→	151 / 205											
254400					**2458002**	[–] 24580 17	→2007-07-30						
3.0	09/04→12/07	169 / 230											
254500					**2458002**	[–] 24580 17							
3.0 4x4	09/04→12/05	169 / 230											
FOCUS 09/10→12/11													
254600			Ate		**2372301**	[–] 23723 18.2	2010-12→	Ate		**2413701**	[–] 24137 16.7	⊕ rear disc brake 2010-12→	
2.0	09/10→12/11	104 / 140	Ate	epad	**2372381**	[–] 23723 18.2	2010-12→	Ate	epad	**2413781**	[–] 24137 16.7	⊕ rear disc brake 2010-12→	
FOCUS Coupe 09/07→12/11													
254700			Ate		**2372301**	[–] 23723 18.2	2010-12→	Ate		**2413701**	[–] 24137 16.7	⊕ rear disc brake 2010-12→	
2.0	09/07→12/11	104 / 140	Ate	epad	**2372381**	[–] 23723 18.2	2010-12→	Ate	epad	**2413781**	[–] 24137 16.7	⊕ rear disc brake 2010-12→	
FREESTAR 09/03→12/07													
254800								Luc		**2479901**	[–] 24799 16.9		
3.8	10/03→09/07	147 / 200											
4.2 Limited	10/03→09/07	150 / 204											
254900					**2458002**	[–] 24580 17	2004-07→ →2007-06						
3.9	09/03→12/07	144 / 196											
FUSION 06/05→													
255000			Ake		**2458201**	[–] 24582 18.4		Ake		**2458101**	[–] 24581 15		
2.3	06/05→12/09	117 / 159											
3.0	06/05→12/09	163 / 222											

→

		kW / hp													
FUSION 06/05→															
3.0	08/05→	176 / 239	Ake		**2458201**	[–]	24582	18.4		Ake		**2458101**	[–]	24581	15	
3.0 All-wheel Drive	08/05→	179 / 243														
3.0 All-wheel Drive	11/06→12/09	163 / 222														
3.5	09/06→	193 / 262														
LOBO 10/96→11/03 → F-150, Page 428															
MUSTANG 12/04→02/10															
		255100			**2451301**	[–]	24513	17.8		Luc		**2451401**	[–]	24514	17.3	
4.0 V6	12/04→12/10	157 / 214														
4.6 V8	12/04→	224 / 305														
5.4 V8	01/06→	355 / 483														
		255200			**2451301**	[–]	24513	17.8								
4.6 V8	09/08→02/10	235 / 320														
		255300			**2451301**	[–]	24513	17.8	⊖ high speed br. sys. ⊖ perform. brk. sys.	Luc		**2451401**	[–]	24514	17.3	⊖ high speed br. sys. ⊖ perform. brk. sys.
5.0	09/10→	307 / 418														
5.0 GT	09/12→	313 / 426														
5.4 V8	09/07→12/10	403 / 548														
5.4 V8	03/10→	410 / 558														
MUSTANG Convertible (C) 09/93→12/04															
		255400	Ben		**2409901**	[–]	24099	18		Luc		**2410001**	[–]	24100	15.5	
3.8	09/93→	112 / 152														
3.8	09/93→05/99	108 / 147														
4.6	11/95→05/99	225 / 306														
4.9	09/93→	160 / 218														
		255500			**2477601**	[–]	24776	15.4		Luc		**2410001**	[–]	24100	15.5	
3.8	06/99→09/03	140 / 190														
3.8	06/99→09/03	160 / 218														
4.6	09/98→12/04	192 / 261														
		255600			**2451301**	[–]	24513	17.8	2004-05-12→	Luc		**2451401**	[–]	24514	17.3	2004-05-12→
3.9	09/03→12/04	144 / 196			**2477601**	[–]	24776	15.4	→2004-05-12							
		255700	Wag		**2452501**	[+]	24525	15.5		Luc		**2410001**	[–]	24100	15.5	
4.6	11/95→05/99	160 / 218														
4.6	06/99→09/03	236 / 321														
MUSTANG Convertible 09/05→02/10															
		255800			**2451301**	[–]	24513	17.8		Luc		**2451401**	[–]	24514	17.3	
4.0 V6	12/05→12/10	157 / 214														
4.6 V8	09/05→	224 / 305														
5.4 V8	01/06→	355 / 483														
		255900			**2451301**	[–]	24513	17.8								
4.6 V8	04/09→02/10	235 / 320														
		256000			**2451301**	[–]	24513	17.8	⊖ high speed br. sys. ⊖ perform. brk. sys.	Luc		**2451401**	[–]	24514	17.3	⊖ high speed br. sys. ⊖ perform. brk. sys.
5.0	09/10→	307 / 418														
5.0	01/12→	313 / 426														
5.4	09/06→12/09	373 / 507														
5.4 V8	01/06→	403 / 548														
5.4 V8	01/06→	410 / 558														
MUSTANG Coupe (C) 09/93→12/04															
		256100	Ben		**2409901**	[–]	24099	18		Luc		**2410001**	[–]	24100	15.5	
3.8	09/93→	112 / 152														
3.8	01/94→05/99	108 / 147														
4.6	11/95→05/99	165 / 224														
4.6	11/95→05/99	225 / 306														
4.9	09/93→	160 / 218														
		256200			**2477601**	[–]	24776	15.4		Luc		**2410001**	[–]	24100	15.5	
3.8	09/98→09/03	140 / 190														
4.6	09/98→12/04	192 / 261														
		256300			**2451301**	[–]	24513	17.8	2004-05-12→	Luc		**2451401**	[–]	24514	17.3	2004-05-12→
3.9	09/03→12/04	144 / 196			**2477601**	[–]	24776	15.4	→2004-05-12							
		256400	Wag		**2452501**	[+]	24525	15.5		Luc		**2410001**	[–]	24100	15.5	
4.6	11/95→05/99	160 / 218														
4.6	06/99→09/03	236 / 321														
TAURUS (P5_) 09/95→12/01															
		256500	Luc		**2363701**	[–]	23637	17	→08/01							
3.0	09/95→	108 / 147														
3.0	11/98→	95 / 129														
3.0 24V	09/96→	149 / 203														
3.0 Flex-Fuel	09/95→	108 / 147														
3.0 V6	03/99→	115 / 156														
		256600	Luc		**2363701**	[–]	23637	17	11/98→							
3.0 24V	05/96→12/01	130 / 177	Luc		**2477201**	[–]	24772	17.4	→10/98							
TAURUS Wagon (P5_) 09/96→12/99															
		256700	Luc		**2363701**	[–]	23637	17								
3.0	09/96→12/99	108 / 147														
3.0	11/98→12/99	95 / 129														
3.0 V6	03/99→12/99	115 / 156														
		256800	Luc		**2363701**	[–]	23637	17	11/98→							
3.0 24V	09/96→12/99	149 / 203	Luc		**2477201**	[–]	24772	17.4	→10/98							
THUNDERBIRD Cabriolet 02/00→09/05 → THUNDERBIRD Convertible, Page 430															

F - H

FORD USA

FORD USA

		kW / hp											
THUNDERBIRD Convertible 02/00→09/05													
4.0	02/00→09/02	188 / 256	256900	Luc		2342301	[–] 23423 17.8			Luc		2342401	[–] 23424 17.8
4.0 Premium	10/02→09/05	209 / 284		Luc		82063500				Luc		82063500	
					PRO	92099003	ø 300 x 30 x 43					92099100	ø 288 x 20 x 32.5
WINDSTAR (A3) 01/95→08/04													
3.0 V6	03/95→02/99	109 / 148	257000	Kel		2363501	[–] 23635 18	01/99→		Kel		2437701	[+] 24377 14.6
3.8 V6	01/95→	149 / 203		Luc		2363701	[–] 23637 17	→12/98				91071500	ø 184 x 30
3.0 V6	02/99→	108 / 147	257100	Kel		2363501	[–] 23635 18			Kel		2437701	[+] 24377 14.6
												91071500	ø 184 x 30
3.8	09/00→08/04	127 / 173	257200	Kel		2363501	[–] 23635 18			Kel		2437701	[+] 24377 14.6
4.2	09/02→08/04	157 / 213											

FSO

FSO

		kW / hp											
126P 07/81→09/00													
650	07/81→09/00	18 / 24	257300	Ben		91005900	ø 185 x 31			Ben		91005900	ø 185 x 31
				Fia		97011700				Fia		97011700	
						94006400	ø 185,3 x 35.7					94006400	ø 185,3 x 35.7
ATOU III A trois volumes 09/92→03/02 → POLONEZ III Saloon, Page 431													
ATOU III Stufenheck 09/92→03/02 → POLONEZ III Saloon, Page 431													
CARO III 09/92→03/02 → POLONEZ III, Page 430													
LANOS Hatchback 05/04→10/08													
1.4	05/04→10/08	55 / 75	257400	Ate		2054701	[o] 20547 16.8					91044900	ø 200 x 45
1.5	05/04→10/08	63 / 86			PRO	92029603	ø 236 x 20 x 41					97033700	
												94008600	ø 200,0 x 52.5 ⊕ ABS
												94035100	ø 200,0 x 53.6 ⊖ ABS
1.6 16V	05/04→10/08	78 / 106	257500	Ate		2186201	[o] 21862 18.3					91044900	ø 200 x 45
					PRO	92039203	ø 256 x 24 x 41					97033700	
												94008600	ø 200,0 x 52.5 ⊕ ABS
												94035100	ø 200,0 x 53.6 ⊖ ABS
LANOS Saloon 05/04→10/08													
1.4	05/04→10/08	55 / 75	257600	Ate		2054701	[o] 20547 16.8					91044900	ø 200 x 45
1.5	05/04→10/08	63 / 86			PRO	92029603	ø 236 x 20 x 41					97033700	
												94008600	ø 200,0 x 52.5 ⊕ ABS
												94035100	ø 200,0 x 53.6 ⊖ ABS
1.6 16V	05/04→10/08	78 / 106	257700	Ate		2186201	[o] 21862 18.3					91044900	ø 200 x 45
					PRO	92039203	ø 256 x 24 x 41					97033700	
												94008600	ø 200,0 x 52.5 ⊕ ABS
												94035100	ø 200,0 x 53.6 ⊖ ABS
LANOS Schrägheck 05/04→10/08 → LANOS Hatchback, Page 430													
LANOS Stufenheck 05/04→10/08 → LANOS Saloon, Page 430													
POLONEZ III 09/92→03/02													
1.4 i 16V	09/92→03/02	76 / 103	257800	Ben		2007304	[–] 20073 17.3			Ben		2007404	[–] 20074 10
1.6 i	09/92→03/02	57 / 78		Ben		82027000							
1.9 D	09/92→03/02	51 / 69											

FSO

FSO

		kW / hp											
POLONEZ III Saloon 09/92→03/02													
		257900	Ben		2007304	[–] 20073	17.3		Ben		2007404	[–] 20074	10
1.6 i	09/92→03/02	57 / 78	Ben		82027000								
POLONEZ III Stufenheck 09/92→03/02 → POLONEZ III Saloon, Page 431													
POLONEZ Mk III 09/92→03/02 → POLONEZ III, Page 430													
POLONEZ Mk III Saloon 09/92→03/02 → POLONEZ III Saloon, Page 431													
POLONEZ Mk III Stufenheck 09/92→03/02 → POLONEZ III Saloon, Page 431													

GEELY

GEELY

		kW / hp											
FC 08/06→ → VISION, Page 431													
VISION 08/06→													
		258000	Ake		2390401	[+] 23904	16.6		Ake		2359201	[–] 23592	15
1.8	08/06→	103 / 138											

GMC

GMC

		kW / hp											
CANYON 01/04→													
		258100	Ake		2437001	[+] 24370	16.1						
2800	01/04→	/ 175											
3500	01/04→	/ 220											
YUKON (GMT900) 01/07→													
		258200	Ake		2437001	[+] 24370	16.1						
6.2 AWD	01/07→	279 / 379											

GREAT WALL

GREAT WALL

		kW / hp											
CB150 Großraumlimousine 03/09→ → COOLBEAR MPV, Page 431													
COOLBEAR Großraumlimousine 03/09→ → COOLBEAR MPV, Page 431													
COOLBEAR MPV 03/09→													
		258300	Ake		2390401	[+] 23904	16.6						
1.5	03/09→	77 / 105											
FLORID 02/09→													
		258400	Ake		2390401	[+] 23904	16.6						
1.5	02/09→	77 / 105											
SING 08/03→05/10													
		258500	Sum		2168901	[–] 21689	15.5						
2.2 DN	08/03→05/10	76 / 103											
2.8 DNX EGR	08/03→01/08	57 / 78											

HAFEI

HAFEI

		kW / hp											
SAIBAO 3 Saloon 04/05→													
		258600	Sum		2172501	[+] 21725	17						
1.6	04/05→	74 / 101											
SAIBAO 3 Stufenheck 04/05→ → SAIBAO 3 Saloon, Page 431													

HOLDEN

HOLDEN

		kW / hp											
ADVENTRA Estate (VY) 08/03→10/04													
		258700			2481501	[–] 24815	14.5		Luc		2481801	[–] 24818	18.5
5.7 i V8 AWD	08/03→10/04	235 / 320											
ADVENTRA Estate (VZ) 10/04→07/09													
		258800			2481501	[–] 24815	14.5		Luc		2481801	[–] 24818	18.5
3.6 i V6 AWD	03/05→01/06	190 / 258											
3.6 i V6 AWD	02/06→07/06	188 / 256											
3.6 i V6 AWD	05/06→07/09	195 / 265											
5.7 i V8 AWD	10/04→12/07	235 / 320											
5.7 i V8 AWD	11/04→12/07	250 / 333											
ADVENTRA Kombi (VY) 08/03→10/04 → ADVENTRA Estate (VY), Page 431													
ADVENTRA Kombi (VZ) 10/04→07/09 → ADVENTRA Estate (VZ), Page 431													

30 kW / hp												
ASTRA (AH) 07/05→03/10												
258900												
1.8 i	07/05→03/07	92 / 123	Ate		2383201	[+] 23832 19.6		Luc		2341702	[–] 23417 15.2	⊕ rear disc brake
1.9 CDTI	06/06→03/10	88 / 120										
1.9 CDTI	06/06→03/10	110 / 150	Ate	epad	2383281	[+] 23832 19.6		Luc	epad	2341781	[–] 23417 15.2	⊕ rear disc brake
			Ate		82032000			Luc		82060100		
			Ate		82062900			Luc		82063300		
				PRO	92110903	ø 308 x 25 x 42	⊕ rim 5 hole			91060100	ø 230 x 42	⊕ rear drum brake
				PRO	92129303	ø 280 x 25 x 43.2	⊕ rim 4 hole		PRO	92092003	ø 240 x 10 x 42.7	⊕ rear disc brake
									PRO	92092103	ø 264 x 10 x 42	⊕ rim 5 hole ⊕ rear disc brake
										94031500	ø 230 x 50	⊕ rear drum brake
259000												
1.8 i	04/07→03/10	103 / 140	Ate		2383201	[+] 23832 19.6		Luc		2341702	[–] 23417 15.2	⊕ rear disc brake
2.2 i	12/06→03/08	109 / 146										
			Ate	epad	2383281	[+] 23832 19.6		Luc	epad	2341781	[–] 23417 15.2	⊕ rear disc brake
			Ate		82032000			Luc		82060100		
			Ate		82062900			Luc		82063300		
				PRO	92091903	ø 280 x 25 x 42	⊕ rim 5 hole			91060100	ø 230 x 42	⊕ rear drum brake
				PRO	92129303	ø 280 x 25 x 43.2	⊕ rim 4 hole		PRO	92092003	ø 240 x 10 x 42.7	⊕ rear disc brake
									PRO	92092103	ø 264 x 10 x 42	⊕ rim 5 hole ⊕ rear disc brake
										94031500	ø 230 x 50	⊕ rear drum brake
259100												
2.0 i Turbo	07/05→03/10	147 / 200	Ate		2383201	[+] 23832 19.6		Luc		2341702	[–] 23417 15.2	
			Ate	epad	2383281	[+] 23832 19.6		Luc	epad	2341781	[–] 23417 15.2	
			Ate		82032000			Luc		82060100		
			Ate		82062900			Luc		82063300		
				PRO	92110903	ø 308 x 25 x 42			PRO	92092103	ø 264 x 10 x 42	
ASTRA Cabriolet (TS) 06/02→12/06 → ASTRA Convertible (TS), Page 432												
ASTRA Convertible (TS) 06/02→12/06												
259200												
2.0 i Turbo	06/02→07/04	147 / 192	Ate		2311701	[+] 23117 20.2		Bos		2325803	[+] 23258 16.9	Bosch
			Ate		82032000			Luc		2341703	[+] 23417 15.2	Lucas
			Ate		82062900			Luc		82060100		
				PRO	92110903	ø 308 x 25 x 42		Luc		82063300		
								Bos		82063700		
									PRO	92092103	ø 264 x 10 x 42	
259300												
2.2 i	06/02→12/06	108 / 147	Ate		2383201	[+] 23832 19.6		Luc		2341702	[–] 23417 15.2	⊕ rear disc brake
			Ate	epad	2383281	[+] 23832 19.6		Luc	epad	2341781	[–] 23417 15.2	⊕ rear disc brake
			Ate		82032000			Luc		82060100		
			Ate		82062900			Luc		82063300		
				PRO	92091903	ø 280 x 25 x 42	⊕ rim 5 hole			91060100	ø 230 x 42	⊕ rear drum brake
				PRO	92129303	ø 280 x 25 x 43.2	⊕ rim 4 hole		PRO	92092003	ø 240 x 10 x 42.7	⊕ rear disc brake
									PRO	92092103	ø 264 x 10 x 42	⊕ rim 5 hole ⊕ rear disc brake
										94031500	ø 230 x 50	⊕ rear drum brake
ASTRA Estate (AH) 07/05→03/10												
259400												
1.8 i	07/05→03/07	92 / 125	Ate		2383201	[+] 23832 19.6		Luc		2341702	[–] 23417 15.2	⊕ rear disc brake
1.8 i	04/07→03/10	103 / 140										
			Ate	epad	2383281	[+] 23832 19.6		Luc	epad	2341781	[–] 23417 15.2	⊕ rear disc brake
			Ate		82032000			Luc		82060100		

→

30 kW / hp

ASTRA Estate (AH) 07/05→03/10

1.8 i	07/05→03/07	259400 92 / 125	Ate		82062900			Luc		82063300		
1.8 i	04/07→03/10	103 / 140		PRO	92091903	ø 280 x 25 x 42	⊕ rim 5 hole			91060100	ø 230 x 42	⊕ rear drum brake
				PRO	92129303	ø 280 x 25 x 43.2	⊕ rim 4 hole		PRO	92092003	ø 240 x 10 x 42.7	⊕ rear disc brake
									PRO	92092103	ø 264 x 10 x 42	⊕ rim 5 hole ⊕ rear disc brake
										94031500	ø 230 x 50	⊕ rear drum brake
1.9 CDTI	08/08→03/10	259500 88 / 120	Ate		2383201	[+] 23832 19.6		Luc		2341702	[–] 23417 15.2	⊕ rear disc brake
			Ate	epad	2383281	[+] 23832 19.6		Luc	epad	2341781	[–] 23417 15.2	⊕ rear disc brake
			Ate		82032000			Luc		82060100		
			Ate		82062900			Luc		82063300		
				PRO	92110903	ø 308 x 25 x 42	⊕ rim 5 hole			91060100	ø 230 x 42	⊕ rear drum brake
				PRO	92129303	ø 280 x 25 x 43.2	⊕ rim 4 hole		PRO	92092003	ø 240 x 10 x 42.7	⊕ rear disc brake
									PRO	92092103	ø 264 x 10 x 42	⊕ rim 5 hole ⊕ rear disc brake
										94031500	ø 230 x 50	⊕ rear drum brake

ASTRA Hatchback (TS) 02/98→10/04

1.8 i	02/98→08/00	259600 85 / 116	Ate		2306302	[+] 23063 17.3	⊖ ABS	Bos		2325803	[+] 23258 16.9	Bosch
			Ate		2383201	[+] 23832 19.6	⊕ ABS	Luc		2341703	[+] 23417 15.2	Lucas
			Ate	epad	2383281	[+] 23832 19.6	⊕ ABS	Luc		82060100		
					98023300	L720	⊕ on-board comp. ⊖ ABS	Luc		82063300		
					98029800	L750	⊖ elec. damp. susp.	Bos		82063700		
					98031400	L287	⊕ elec. damp. susp.		PRO	92092103	ø 264 x 10 x 42	⊕ ABS
			Ate		82032000							
			Ate		82062900							
				PRO	92091803	ø 256 x 24 x 41	⊖ ABS					
				PRO	92091903	ø 280 x 25 x 42						
1.8 i	09/00→10/04	259700 92 / 125	Ate		2306302	[+] 23063 17.3	⊖ ABS →09/01	Bos		2325803	[+] 23258 16.9	Bosch
			Ate		2383201	[+] 23832 19.6	⊕ ABS	Luc		2341703	[+] 23417 15.2	Lucas
			Ate	epad	2383281	[+] 23832 19.6	⊕ ABS	Luc		82060100		
					98023300	L720	⊕ on-board comp. ⊖ ABS	Luc		82063300		
					98029800	L750	⊖ elec. damp. susp.	Bos		82063700		
					98031400	L287	⊕ elec. damp. susp.		PRO	92092103	ø 264 x 10 x 42	⊕ ABS
			Ate		82032000							
			Ate		82062900							
				PRO	92091803	ø 256 x 24 x 41	⊖ ABS →09/01					
				PRO	92091903	ø 280 x 25 x 42						
2.0 i Turbo	05/03→07/04	259800 147 / 197	Ate		2311701	[+] 23117 20.2		Bos		2325803	[+] 23258 16.9	Bosch
			Ate		82032000			Luc		2341703	[+] 23417 15.2	Lucas
			Ate		82062900			Luc		82060100		
				PRO	92110903	ø 308 x 25 x 42		Luc		82063300		
								Bos		82063700		
									PRO	92092103	ø 264 x 10 x 42	

F - H

		kW / hp											
ASTRA Hatchback (TS) 02/98→10/04													
		259900	Ate		**2383201**	[+] 23832 19.6		Bos		**2325803**	[+] 23258 16.9	Bosch
2.2 i	09/00→07/04	108 / 147	Ate	epad	**2383281**	[+] 23832 19.6		Luc		**2341703**	[+] 23417 15.2	Lucas
					98029800	L750	⊖ elec. damp. susp.	Luc		**82060100**		
					98031400	L287	⊕ elec. damp. susp.	Luc		**82063300**		
			Ate		**82032000**			Bos		**82063700**		
			Ate		**82062900**				PRO	**92092103**	ø 264 x 10 x 42	
				PRO	**92091903**	ø 280 x 25 x 42						
ASTRA Kombi (AH) 07/05→03/10 → ASTRA Estate (AH), Page 432													
ASTRA Saloon (TS) 02/98→10/04													
		260000	Ate		**2306302**	[+] 23063 17.3	⊖ ABS	Bos		**2325803**	[+] 23258 16.9	Bosch
1.8 i	02/98→08/00	85 / 116	Ate		**2383201**	[+] 23832 19.6	⊕ ABS	Luc		**2341703**	[+] 23417 15.2	Lucas
			Ate	epad	**2383281**	[+] 23832 19.6	⊕ ABS	Luc		**82060100**		
					98023300	L720	⊕ on-board comp. ⊖ ABS	Luc		**82063300**		
					98029800	L750	⊖ elec. damp. susp.	Bos		**82063700**		
					98031400	L287	⊕ elec. damp. susp.		PRO	**92092103**	ø 264 x 10 x 42	⊕ ABS
			Ate		**82032000**							
			Ate		**82062900**							
				PRO	**92091803**	ø 256 x 24 x 41	⊖ ABS					
				PRO	**92091903**	ø 280 x 25 x 42						
		260100	Ate		**2306302**	[+] 23063 17.3	⊖ ABS →09/01	Bos		**2325803**	[+] 23258 16.9	Bosch
1.8 i	09/00→10/04	92 / 125	Ate		**2383201**	[+] 23832 19.6	⊕ ABS	Luc		**2341703**	[+] 23417 15.2	Lucas
			Ate	epad	**2383281**	[+] 23832 19.6	⊕ ABS	Luc		**82060100**		
					98023300	L720	⊕ on-board comp. ⊖ ABS	Luc		**82063300**		
					98029800	L750	⊖ elec. damp. susp.	Bos		**82063700**		
					98031400	L287	⊕ elec. damp. susp.		PRO	**92092103**	ø 264 x 10 x 42	⊕ ABS
			Ate		**82032000**							
			Ate		**82062900**							
				PRO	**92091803**	ø 256 x 24 x 41	⊖ ABS →09/01					
				PRO	**92091903**	ø 280 x 25 x 42						
ASTRA Schrägheck (TS) 02/98→10/04 → ASTRA Hatchback (TS), Page 433													
ASTRA SPORTSBACK (AH) 07/05→03/10													
		260200	Ate		**2383201**	[+] 23832 19.6		Luc		**2341702**	[–] 23417 15.2	⊕ rear disc brake
1.8 i	07/05→03/08	92 / 123										
1.8 i	04/07→03/10	103 / 140	Ate	epad	**2383281**	[+] 23832 19.6		Luc	epad	**2341781**	[–] 23417 15.2	⊕ rear disc brake
2.2	12/06→03/08	110 / 150										
2.2 i	12/06→03/08	109 / 148										
2.2 i	12/06→03/10	110 / 150	Ate		**82032000**			Luc		**82060100**		
			Ate		**82062900**			Luc		**82063300**		
				PRO	**92091903**	ø 280 x 25 x 42	⊕ rim 5 hole			**91060100**	ø 230 x 42	⊕ rear drum brake
				PRO	**92129303**	ø 280 x 25 x 43.2	⊕ rim 4 hole		PRO	**92092003**	ø 240 x 10 x 42.7	⊕ rear disc brake
									PRO	**92092103**	ø 264 x 10 x 42	⊕ rim 5 hole ⊕ rear disc brake
										94031500	ø 230 x 50	⊕ rear drum brake
		260300	Ate		**2383201**	[+] 23832 19.6		Luc		**2341702**	[–] 23417 15.2	
2.0 i Turbo	06/06→03/10	147 / 197	Ate	epad	**2383281**	[+] 23832 19.6		Luc	epad	**2341781**	[–] 23417 15.2	

→

		kW / hp											
ASTRA SPORTSBACK (AH) 07/05→03/10													
2.0 i Turbo	06/06→03/10	260300 147 / 197	Ate		82032000				Luc		82060100		
			Ate		82062900				Luc		82063300		
				PRO	92110903	ø 308 x 25 x 42				PRO	92092103	ø 264 x 10 x 42	
ASTRA Stufenheck (TS) 02/98→10/04 → ASTRA Saloon (TS), Page 434													
ASTRA TWINTOP (AH) 03/08→03/10													
2.2 i	03/08→03/10	260400 110 / 150	Ate		2383201	[+] 23832 19.6			Luc		2341702	[–] 23417 15.2	⊕ rear disc brake
			Ate	epad	2383281	[+] 23832 19.6			Luc	epad	2341781	[–] 23417 15.2	⊕ rear disc brake
			Ate		82032000				Luc		82060100		
			Ate		82062900				Luc		82063300		
				PRO	92110903	ø 308 x 25 x 42	⊕ rim 5 hole				91060100	ø 230 x 42	⊕ rear drum brake
				PRO	92129303	ø 280 x 25 x 43.2	⊕ rim 4 hole			PRO	92092003	ø 240 x 10 x 42.7	⊕ rear disc brake
										PRO	92092103	ø 264 x 10 x 42	⊕ rim 5 hole ⊕ rear disc brake
											94031500	ø 230 x 50	⊕ rear drum brake
BARINA Cabriolet (SB) 11/97→11/00 → BARINA Convertible (SB), Page 435													
BARINA Convertible (SB) 11/97→11/00													
1.4 i	11/97→11/00	260500 60 / 80	Ate		2054701	[o] 20547 16.8					91044800	ø 200 x 28	
			Ate		82030600						97008200		
			Ate		82062900						94009900	ø 200,0 x 34	⊖ ABS
				PRO	92029603	ø 236 x 20 x 41					94022300	ø 200,0 x 34	⊕ ABS
BARINA Hatchback (SB) 09/97→02/01													
1.4 i	09/97→02/01	260600 60 / 80	Ate		2054701	[o] 20547 16.8							
				PRO	92020903	ø 236 x 12.5 x 41							
				PRO	92029603	ø 236 x 20 x 41							
BARINA Hatchback (TK) 03/05→06/12													
1.6 i	03/05→06/12	260700 77 / 105	Ake		2397401	[–] 23974 17.8							
			Ake		2397406	[+] 23974 17.8							
			Ake		82508400								
BARINA Hatchback (TM) 11/11→													
1.6 i	11/11→	260800 85 / 116			2503101	[+] 25031 18.8	⊕ rim size 15"				91062500	ø 200 x 35	⊕ rim size 15"
				epad	2503181	[+] 25031 18.8	⊕ rim size 15"				91079900	ø 200 x 36	⊕ rim size 14"
					92241400	ø 256 x 24 x 45.5	⊕ rim size 14"						
				PRO	92198903	ø 276 x 26 x 45.5	⊕ rim size 15"						
BARINA Hatchback (XC) 09/00→02/05													
1.4 Efi	01/04→02/05	260900 66 / 90	Luc		2322501	[+] 23225 17			Luc		2341703	[+] 23417 15.2	
			Luc		82060200					PRO	92111003	ø 240 x 10.2 x 40.5	
				PRO	92111103	ø 260 x 24 x 41							
1.4 Sfi 1.8 SRi	09/00→12/03 09/00→02/05	261000 66 / 90 92 / 125	Luc		2322501	[+] 23225 17			Luc		2328404	[+] 23284 14	
			Luc		82060200					PRO	92111003	ø 240 x 10.2 x 40.5	
				PRO	92111103	ø 260 x 24 x 41							
BARINA Saloon (TK) 11/05→06/12													
1.6 i	11/05→06/12	261100 77 / 105	Ake		2397401	[–] 23974 17.8					91062500	ø 200 x 35	
			Ake		2397406	[+] 23974 17.8					97033700		

30 kW / hp												
BARINA Saloon (TK) 11/05→06/12												
261100		Ake		**82508400**								
1.6 i 11/05→06/12 77 / 105				**92133400**	ø 236 x 20 x 41							
BARINA Saloon (TM) 12/12→												
261200				**2503101**	[+] 25031 18.8	⊕ rim size 15"			**91062500**	ø 200 x 35	⊕ rim size 15"	
1.6 i 12/12→ 85 / 116			epad	**2503181**	[+] 25031 18.8	⊕ rim size 15"			**91079900**	ø 200 x 36	⊕ rim size 14"	
				92241400	ø 256 x 24 x 45.5	⊕ rim size 14"						
			PRO	**92198903**	ø 276 x 26 x 45.5	⊕ rim size 15"						
BARINA Schrägheck (SB) 09/97→02/01 → BARINA Hatchback (SB), Page 435												
BARINA Schrägheck (TK) 03/05→06/12 → BARINA Hatchback (TK), Page 435												
BARINA Schrägheck (TM) 11/11→ → BARINA Hatchback (TM), Page 435												
BARINA Schrägheck (XC) 09/00→02/05 → BARINA Hatchback (XC), Page 435												
BARINA SPARK (MJ) 10/10→												
261300				**2526801**	[+] 25268 17.9				**91062500**	ø 200 x 35		
1.2 i 10/10→ 59 / 80												
1.2 i 10/10→ 63 / 86				**92133400**	ø 236 x 20 x 41				**97033700**			
BARINA Stufenheck (TK) 11/05→06/12 → BARINA Saloon (TK), Page 435												
BARINA Stufenheck (TM) 12/12→ → BARINA Saloon (TM), Page 436												
CAPRICE Saloon (VS) 04/95→06/99												
261400				**2361401**	[–] 23614 14		Luc		**2324204**	[–] 23242 14.2		
3.8 i V6 Supercharged 10/96→06/99 165 / 224												
5.0 i V8 04/95→06/99 168 / 228												
CAPRICE Saloon (WH) 06/99→04/03												
261500				**2481501**	[–] 24815 14.5		Luc		**2481801**	[–] 24818 18.5		
3.8 i V6 06/99→08/01 147 / 200												
3.8 i V6 08/01→04/03 152 / 204												
3.8 i V6 Supercharged 06/99→08/01 171 / 233												
5.7 i V8 06/99→10/00 220 / 299												
5.7 i V8 10/00→04/03 225 / 306												
CAPRICE Saloon (WK) 05/03→07/04												
261600				**2481501**	[–] 24815 14.5		Luc		**2481801**	[–] 24818 18.5		
3.8 i V6 05/03→07/04 152 / 207												
3.8 i V6 Supercharged 05/03→07/04 171 / 233												
5.7 i V8 05/03→07/04 245 / 333												
CAPRICE Saloon (WL) 08/04→07/06												
261700				**2481501**	[–] 24815 14.5		Luc		**2481801**	[–] 24818 18.5		
3.6 i V6 08/04→07/06 190 / 258												
5.7 i V8 08/04→01/06 250 / 340												
6.0 i V8 02/06→07/06 260 / 348												
CAPRICE Saloon (WM) 07/06→												
261800				**2574501**	[–] 25745 17.5							
3.6 i V6 07/06→ 180 / 245												
3.6 i V6 07/06→ 195 / 265												
3.6 i V6 07/06→ 210 / 286												
6.0 i V8 07/06→ 260 / 354												
6.0 i V8 08/06→ 270 / 367												
CAPRICE Stufenheck (VS) 04/95→06/99 → CAPRICE Saloon (VS), Page 436												
CAPRICE Stufenheck (WH) 06/99→04/03 → CAPRICE Saloon (WH), Page 436												
CAPRICE Stufenheck (WK) 05/03→07/04 → CAPRICE Saloon (WK), Page 436												
CAPRICE Stufenheck (WL) 08/04→07/06 → CAPRICE Saloon (WL), Page 436												
CAPRICE Stufenheck (WM) 07/06→ → CAPRICE Saloon (WM), Page 436												
CAPTIVA (CG) 12/06→												
261900		Man		**2451001**	[+] 24510 16.9		Man		**2449801**	[+] 24498 15.4		
2.0 TD 08/08→ 110 / 150												
2.0 TD AWD 03/07→ 110 / 150		Man		**82077300**			Man		**82077200**			
2.2 TD 03/11→ 135 / 184												
2.2 TD AWD 03/11→ 135 / 184												
2.4 i 12/09→ 103 / 140				**92165400**	ø 296 x 29 x 51.6				**92165500**	ø 303 x 20 x 71.7		
2.4 i 03/12→ 123 / 167												
2.4 i AWD 12/09→ 103 / 140									**91067100**	ø 188.4 x 26		
2.4 i AWD 03/12→ 123 / 167												
3.0 i AWD 03/12→ 167 / 227												
3.2 i AWD 12/06→09/08 167 / 227												
3.2 i AWD 12/08→ 169 / 230									**97038500**			
COLORADO 7 (RG) 06/12→												
262000				**2514901**	[+] 25149 15.8							
2.8 TD 06/12→ 132 / 180												

COLORADO Pickup (RC) 03/08→06/12

			kW / hp										
262100													
3.0 TD	03/08→06/12	120 / 163			2514901	[+] 25149 15.8							
3.0 TD 4x4	03/08→06/12	120 / 163		PRO	92194703	ø 256 x 26 x 40	⊖ incr. ground clear.						
262200					2514901	[+] 25149 15.8							
3.6 i V6	03/08→06/12	157 / 214											
3.6 i V6 4x4	03/08→06/12	157 / 214		PRO	92194703	ø 256 x 26 x 40							

COLORADO Pick-up (RC) 03/08→06/12 → COLORADO Pickup (RC), Page 437

COLORADO Pickup (RG) 06/12→

262300					2514901	[+] 25149 15.8							
2.8 TD	06/12→	132 / 180											
2.8 TD 4x4	06/12→	132 / 180											

COLORADO Pick-up (RG) 06/12→ → COLORADO Pickup (RG), Page 437

COLORADO Platform/Chassis (RC) 03/08→06/12

262400					2514901	[+] 25149 15.8							
2.4 i	07/08→06/12	92 / 125											
3.0 TD	03/08→06/12	120 / 163											
3.0 TD 4x4	03/08→06/12	120 / 163		PRO	92194703	ø 256 x 26 x 40	⊖ incr. ground clear.						
262500					2514901	[+] 25149 15.8							
3.6 i V6	03/08→06/12	157 / 214											
				PRO	92194703	ø 256 x 26 x 40							

COLORADO Platform/Chassis (RG) 06/12→

262600					2514901	[+] 25149 15.8							
2.4 D	06/12→	110 / 150											
2.8 TD	06/12→	132 / 180											
2.8 TD 4x4	06/12→	132 / 180											

COLORADO Pritsche/Fahrgestell (RC) 03/08→06/12 → COLORADO Platform/Chassis (RC), Page 437

COLORADO Pritsche/Fahrgestell (RG) 06/12→ → COLORADO Platform/Chassis (RG), Page 437

COMBO Box (SB) 07/97→09/02

262700			Ate		2054701	[o] 20547 16.8					91033200	ø 230 x 50	
1.4 i	07/97→09/02	60 / 82	Ate		82030600			GM		97001200			
			Ate		82062900					84033200	bore ø 19 ø 230 x 50		
				PRO	92029603	ø 236 x 20 x 41				94003700	ø 230,0 x 58.8		

COMBO Box (XC) 09/02→04/05

262800			Luc		2322501	[+] 23225 17		Luc		2341703	[+] 23417 15.2	⊕ rear disc brake	
1.4 i	04/05→	66 / 90	Ate		2383201	[+] 23832 19.6	53000001→ ⊕ incr. payload	Luc		82060100			
			Ate	epad	2383281	[+] 23832 19.6	53000001→ ⊕ incr. payload	Luc		82063300			
			Luc		82060200					91060100	ø 230 x 42	⊕ rear drum brake	
			Ate		82032000		53000001→ ⊕ incr. payload		PRO	92092003	ø 240 x 10 x 42.7	⊕ rear disc brake	
				PRO	92111103	ø 260 x 24 x 41			PRO	92124703	ø 264 x 10 x 42	⊕ rear disc brake	
										94020300	ø 230,0 x 50.2	⊕ rear drum brake →36999999	
262900			Luc		2322501	[+] 23225 17		Luc		2341703	[+] 23417 15.2	⊕ rear disc brake	
1.6 i	09/02→04/05	62 / 84	Ate		2383201	[+] 23832 19.6	53000001→ ⊕ incr. payload	Luc		82060100			
			Ate	epad	2383281	[+] 23832 19.6	53000001→ ⊕ incr. payload	Luc		82063300			
			Luc		82060200					91060100	ø 230 x 42	⊕ rear drum brake	
			Ate		82032000		53000001→ ⊕ incr. payload		PRO	92092003	ø 240 x 10 x 42.7	⊕ rear disc brake	
				PRO	92111103	ø 260 x 24 x 41			PRO	92124703	ø 264 x 10 x 42	⊕ rear disc brake	
				PRO	92124603	ø 280 x 25 x 42.5	43000001→ ⊕ incr. payload			94020300	ø 230,0 x 50.2	⊕ rear drum brake →36999999	

COMBO Kasten (SB) 07/97→09/02 → COMBO Box (SB), Page 437

COMBO Kasten (XC) 09/02→04/05 → COMBO Box (XC), Page 437

COMMODORE Estate (VE) 07/06→

263000					2574501	[–] 25745 17.5							
3.0 i V6	09/09→	190 / 258											
3.6 i V6	04/08→	180 / 245											
3.6 i V6	04/08→	195 / 261	Bre		2309204	[+] 23092 15	Brembo						
3.6 i V6	11/08→	175 / 238											
3.6 i V6	09/09→	210 / 286											

		kW / hp											
COMMODORE Estate (VE) 07/06→													
6.0 i V8	07/06→	260 / 354		**2574501**	[–]	25745	17.5						
6.0 i V8	04/08→	270 / 362											
			Bre	**2309204**	[+]	23092	15	Brembo					
COMMODORE Estate (VT) 09/97→08/02													
		263100		**2481501**	[–]	24815	14.5		Luc		**2481801**	[–]	24818 18.5
3.8 i V6	09/97→08/02	147 / 200											
5.0 i V8	09/97→08/02	179 / 243											
5.7 i V8	06/99→08/00	220 / 299											
COMMODORE Estate (VX) 09/00→09/02													
		263200		**2481501**	[–]	24815	14.5		Luc		**2481801**	[–]	24818 18.5
3.8 i V6	09/00→09/02	152 / 207											
5.7 i V8	09/00→09/02	225 / 306											
COMMODORE Estate (VY) 09/02→08/04													
		263300		**2481501**	[–]	24815	14.5		Luc		**2481801**	[–]	24818 18.5
3.8 i V6	09/02→08/04	152 / 207											
5.7 i V8	09/02→08/03	235 / 320											
COMMODORE Estate (VZ) 09/04→07/07													
		263400		**2481501**	[–]	24815	14.5		Luc		**2481801**	[–]	24818 18.5
3.6 i V6	09/04→07/06	175 / 238											
3.6 i V6	09/04→07/07	180 / 245											
3.6 i V6 Dual Fuel LPG	09/04→07/06	175 / 238											
5.7 i V8	09/04→12/05	235 / 320											
6.0 i V8	01/06→01/07	260 / 354											
COMMODORE Kombi (VE) 07/06→ → COMMODORE Estate (VE), Page 437													
COMMODORE Kombi (VT) 09/97→08/02 → COMMODORE Estate (VT), Page 438													
COMMODORE Kombi (VX) 09/00→09/02 → COMMODORE Estate (VX), Page 438													
COMMODORE Kombi (VY) 09/02→08/04 → COMMODORE Estate (VY), Page 438													
COMMODORE Kombi (VZ) 09/04→07/07 → COMMODORE Estate (VZ), Page 438													
COMMODORE Pickup (VE) 09/07→													
		263500		**2574501**	[–]	25745	17.5						
3.6 i V6	09/07→	175 / 238											
3.6 i V6	09/07→	180 / 245											
3.6 i V6	09/07→	210 / 286	Bre	**2309204**	[+]	23092	15	Brembo					
3.6 i V6	09/09→	190 / 258											
3.6 i V6	09/09→	195 / 265											
3.6 i V6 Dual Fuel LPG	09/07→	175 / 238											
6.0 i V8	09/07→	260 / 354											
6.0 i V8	09/07→	270 / 367											
COMMODORE Pick-up (VE) 09/07→ → COMMODORE Pickup (VE), Page 438													
COMMODORE Pickup (VS) 04/95→12/00													
		263600		**2361401**	[–]	23614	14		Luc		**2324204**	[–]	23242 14.2
3.8 i V6	04/95→12/00	147 / 200											
5.0 i V8	06/96→12/00	168 / 228											
5.0 i V8	09/97→12/00	179 / 243											
COMMODORE Pick-up (VS) 04/95→12/00 → COMMODORE Pickup (VS), Page 438													
COMMODORE Pickup (VU) 12/00→09/02													
		263700		**2481501**	[–]	24815	14.5		Luc		**2481801**	[–]	24818 18.5
3.8 i V6	12/00→09/02	152 / 207											
5.7 i V8	12/00→09/02	225 / 306											
COMMODORE Pick-up (VU) 12/00→09/02 → COMMODORE Pickup (VU), Page 438													
COMMODORE Pickup (VY) 09/02→08/04													
		263800		**2481501**	[–]	24815	14.5		Luc		**2481801**	[–]	24818 18.5
3.8 i V6	09/02→08/04	152 / 207											
3.8 i V6 Supercharged	09/02→08/04	171 / 233											
5.7 i V8	09/02→08/03	225 / 306											
5.7 i V8	09/02→08/03	245 / 333											
5.7 i V8	09/02→08/04	235 / 320											
COMMODORE Pick-up (VY) 09/02→08/04 → COMMODORE Pickup (VY), Page 438													
COMMODORE Pickup (VZ) 09/04→08/07													
		263900		**2481501**	[–]	24815	14.5	⊖ police veh.	Luc		**2481801**	[–]	24818 18.5
3.6 i V6	09/04→07/06	175 / 238											
		264000		**2481501**	[–]	24815	14.5		Luc		**2481801**	[–]	24818 18.5
3.6 i V6 All-wheel Drive	09/04→08/07	190 / 258											
3.6 i V6 Dual Fuel LPG	10/06→08/07	175 / 238											
5.7 i V8	09/04→02/06	250 / 340											
6.0 i V8	01/06→08/07	260 / 354											
COMMODORE Pick-up (VZ) 09/04→08/07 → COMMODORE Pickup (VZ), Page 438													
COMMODORE Saloon (VE) 07/06→													
		264100		**2574501**	[–]	25745	17.5	⊖ police veh.					
3.6 i V6	09/09→	210 / 286											
		264200		**2574501**	[–]	25745	17.5						
6.0 i V8	07/06→	260 / 354											
6.0 i V8	07/06→	270 / 367											
			Bre	**2309204**	[+]	23092	15	Brembo					
COMMODORE Saloon (VT) 09/97→08/00													
		264300		**2481501**	[–]	24815	14.5		Luc		**2481801**	[–]	24818 18.5
3.8 i V6	09/97→08/00	147 / 200											
3.8 i V6 Supercharged	09/97→08/00	171 / 233											
5.0 i V8	09/97→06/99	179 / 243											

→

		kW / hp											
COMMODORE Saloon (VT) 09/97→08/00													
5.0 i V8	04/98→08/00	195 / 265		2481501	[–] 24815	14.5		Luc	2481801	[–] 24818	18.5		
5.7 i V8	06/99→08/00	220 / 299											
COMMODORE Saloon (VX) 09/00→09/02													
		264400		2481501	[–] 24815	14.5		Luc	2481801	[–] 24818	18.5		
3.8 i V6	09/00→09/02	152 / 207											
3.8 i V6 Supercharged	09/00→08/02	171 / 233											
5.7 i V8	09/00→09/02	225 / 306											
COMMODORE Saloon (VY) 09/02→08/04													
		264500		2481501	[–] 24815	14.5		Luc	2481801	[–] 24818	18.5		
3.8 i V6	09/02→08/04	152 / 207											
3.8 i V6 Supercharched	09/02→08/04	171 / 233											
5.7 i V8	09/02→08/03	235 / 320											
5.7 i V8	09/02→08/03	245 / 333											
COMMODORE Saloon (VZ) 09/04→06/06													
		264600		2481501	[–] 24815	14.5		Luc	2481801	[–] 24818	18.5		
3.6 i V6	09/04→06/06	175 / 238											
3.6 i V6	09/04→06/06	190 / 258											
3.6 i V6 Dual Fuel LPG	08/05→06/06	175 / 238											
5.7 i V8	09/04→12/05	235 / 320											
5.7 i V8	09/04→12/05	250 / 340											
6.0 i V8	01/06→06/06	260 / 354											
COMMODORE Sportwagon (VE) 07/06→ → COMMODORE Estate (VE), Page 437													
COMMODORE Stufenheck (VE) 07/06→ → COMMODORE Saloon (VE), Page 438													
COMMODORE Stufenheck (VT) 09/97→08/00 → COMMODORE Saloon (VT), Page 438													
COMMODORE Stufenheck (VX) 09/00→09/02 → COMMODORE Saloon (VX), Page 439													
COMMODORE Stufenheck (VY) 09/02→08/04 → COMMODORE Saloon (VY), Page 439													
COMMODORE Stufenheck (VZ) 09/04→06/06 → COMMODORE Saloon (VZ), Page 439													
CREWMAN Pickup (VY) 09/03→07/04													
		264700		2481501	[–] 24815	14.5		Luc	2481801	[–] 24818	18.5		
3.8 i V6	09/03→07/04	152 / 207											
5.7 i V8	09/03→07/04	225 / 306											
5.7 i V8 4x4	09/03→07/04	225 / 306											
CREWMAN Pick-up (VY) 09/03→07/04 → CREWMAN Pickup (VY), Page 439													
CREWMAN Pickup (VZ) 08/04→12/07													
		264800		2481501	[–] 24815	14.5		Luc	2481801	[–] 24818	18.5		
3.6 i V6	08/04→09/06	175 / 238											
3.6 i V6	09/06→12/07	180 / 245											
3.6 i V6 4x4	11/05→12/07	175 / 238											
5.7 i V8	08/04→02/06	235 / 320											
5.7 i V8 4x4	08/04→02/06	235 / 320											
6.0 i V8	02/06→07/06	260 / 354											
6.0 i V8	06/06→12/07	270 / 367											
6.0 i V8 4x4	02/06→07/06	260 / 354											
CREWMAN Pick-up (VZ) 08/04→12/07 → CREWMAN Pickup (VZ), Page 439													
CRUZE Estate (JH) 06/12→													
		264900		2503101	[+] 25031	18.8	⊕ rim size 15" J67 -brake		2509602	[+] 25096	16.2	⊕ rim size 15" J67 -brake	
1.8 i	06/12→	104 / 141											
2.0 DTFi	06/12→	120 / 163		2503181 epad	[+] 25031	18.8	⊕ rim size 15" J67 -brake		92205503 PRO	ø 268 x 12 x 45.1		⊕ rim size 15" J67 -brake	
				2503401	[+] 25034	18.8	⊕ rim size 16" J60 -brake		92205703 PRO	ø 292 x 12 x 44.9		⊕ rim size 16" J60 -brake	
				2503481 epad	[+] 25034	18.8	⊕ rim size 16" J60 -brake						
				92198903 PRO	ø 276 x 26 x 45.5		⊕ rim size 15" J67 -brake						
				92205603 PRO	ø 300 x 26 x 45.5		⊕ rim size 16" J60 -brake						
CRUZE Hatchback (JG, JH) 11/11→													
		265000		2503101	[+] 25031	18.8	⊕ rim size 15"		2509601	[+] 25096	16.2		
1.4 i Turbo	11/11→	103 / 140											
1.8 i	11/11→	104 / 141		2503181 epad	[+] 25031	18.8	⊕ rim size 15"		2509681 epad	[+] 25096	16.2		
2.0 DTFi	11/11→	120 / 163		2503401	[+] 25034	18.8	⊕ rim size 15"		92205503 PRO	ø 268 x 12 x 45.1		⊕ rim size 15"	
				2503481 epad	[+] 25034	18.8	⊕ rim size 15"		92205703 PRO	ø 292 x 12 x 44.9		⊕ rim size 16"	
			Man	82505200									
				92198903 PRO	ø 276 x 26 x 45.5		⊕ rim size 15"						
				92205603 PRO	ø 300 x 26 x 45.5		⊕ rim size 16"						
CRUZE Hatchback (YG) 08/02→06/06													
		265100	Sum	2350701	[+] 23507	15			91065200	ø 200 x 29		⊖ ABS	
1.5 i AWD	08/02→06/06	73 / 99	Bos	2360501	[+] 23605	15.5	⊖ AUS						
				92135303 PRO	ø 253 x 17 x 49.1								

F - H

CRUZE Kombi (JH) 06/12→ → CRUZE Estate (JH), Page 439

CRUZE Saloon (JG, JH) 06/09→

		kW / hp										
265200				2503101	[+] 25031	18.8	⊕ rim size 15"		2509601	[+] 25096	16.2	
1.4 i Turbo	03/11→	103 / 140										
1.8 i	06/09→	104 / 141		2503181	[+] 25031	18.8	⊕ rim size 15"		2509681	[+] 25096	16.2	
2.0 DTFi	06/09→03/11	110 / 150	epad					epad				
2.0 DTFi	03/11→	120 / 163		2503401	[+] 25034	18.8	⊕ rim size 15"	PRO	92205503	ø 268 x 12 x 45.1	⊕ rim size 15"	
				2503481	[+] 25034	18.8	⊕ rim size 15"	PRO	92205703	ø 292 x 12 x 44.9	⊕ rim size 16"	
			epad									
			Man	82505200								
			PRO	92198903	ø 276 x 26 x 45.5		⊕ rim size 15"					
			PRO	92205603	ø 300 x 26 x 45.5		⊕ rim size 16"					

CRUZE Schrägheck (JG, JH) 11/11→ → CRUZE Hatchback (JG, JH), Page 439

CRUZE Schrägheck (YG) 08/02→06/06 → CRUZE Hatchback (YG), Page 439

CRUZE Stufenheck (JG, JH) 06/09→ → CRUZE Saloon (JG, JH), Page 440

EPICA Saloon (EP) 03/07→

265300			Sum	2406201	[+] 24062	17.6	112279→		2474401	[+] 24744	14.7	
2.0 i	03/07→06/08	105 / 140										
2.5 i	03/07→	115 / 154	Sum	2486401	[+] 24864	17	→112278	Sum	82044600			
TD	07/08→	110 / 147										
				92133500	ø 256 x 24 x 47.5							

EPICA Stufenheck (EP) 03/07→ → EPICA Saloon (EP), Page 440

FRONTERA (UES) 10/95→04/04

265400			Ake	2325001	[o] 23250	16.5	⊕ on-board comp.	Sum	2187503	[+] 21875	15.8	
2.0 i 4x4	10/95→03/99	85 / 115										
2.2 i 4x4	02/99→07/02	96 / 131	Ake	2184501	[+] 21845	16.5	⊖ on-board comp.	Sum	82033800			
3.2 i 4x4	08/98→04/04	151 / 205										
			Ake	82033700					92091600	ø 313 x 18 x 80		
				92091400	ø 280 x 26 x 36		⊕ ABS		91059200	ø 210 x 32		

JACKAROO / MONTEREY (UBS) 03/98→09/04

265500			Ake	2184501	[+] 21845	16.5		Sum	2187503	[+] 21875	15.8	
3.0 TD 4x4 (UBS73)	03/98→09/04	117 / 159										
3.5 RS 4x4 (UBS26)	03/98→09/04	158 / 215	Ake	82033700				Sum	82033800			
				92091400	ø 280 x 26 x 36				92091600	ø 313 x 18 x 80		

MALIBU (V300) 05/13→

265600			Man	2441201	[+] 24412	19.1	17" -brake	TRW	2442101	[+] 24421	17.3	16" -brake
2.0 D	05/13→	117 / 159										
2.4 i	05/13→	123 / 167	Man	2441501	[+] 24415	19.1	16" -brake	TRW	2442102	[+] 24421	17.3	17" -brake
			Man	82503800				Luc	82503900			17" -brake
			PRO	92186903	ø 296 x 30 x 51		16" -brake		82513400			16" -brake
			PRO	92187003	ø 321 x 30 x 50.9		17" -brake	PRO	92222903	ø 292 x 12 x 48		16" -brake

MONARO Coupe (V2) 12/01→09/04

265700				2481501	[–] 24815	14.5		Luc	2481801	[–] 24818	18.5	
3.8	12/01→08/03	171 / 233										
5.7 i V8	12/01→01/03	225 / 306										
5.7 i V8	01/03→08/03	235 / 320										
5.7 i V8	08/03→09/04	245 / 333										

MONARO Coupe (VZ) 09/04→07/06

265800				2481501	[–] 24815	14.5		Luc	2481801	[–] 24818	18.5	
5.7 i V8	09/04→07/06	260 / 354										

ONE TONNER Platform/Chassis (VY) 06/03→12/04

265900				2481501	[–] 24815	14.5		Luc	2481801	[–] 24818	18.5	
3.6	08/03→07/04	175 / 238										
3.8 i V6	06/03→12/04	152 / 207										
5.7	08/03→07/04	235 / 320										

ONE TONNER Platform/Chassis (VZ) 11/04→12/05

266000				2481501	[–] 24815	14.5		Luc	2481801	[–] 24818	18.5	
3.6	11/04→12/05	175 / 238										
3.6 All-wheel Drive	11/04→12/05	175 / 238										
5.7	11/04→12/05	235 / 320										

ONE TONNER Pritsche/Fahrgestell (VY) 06/03→12/04
→ ONE TONNER Platform/Chassis (VY), Page 440

ONE TONNER Pritsche/Fahrgestell (VZ) 11/04→12/05
→ ONE TONNER Platform/Chassis (VZ), Page 440

		kW / hp										
RODEO Pickup (RA) 02/03→10/08												
		266100	Ake		**2437001**	[+] 24370 16.1						
2.4 i (TFR32)	02/03→07/08	94 / 128		PRO	**92174803**	ø 280 x 27 x 40						
3.0 DiTD (TFR77)	01/07→10/08	117 / 159										
3.0 DiTD 4x4 (TFS77)	01/07→10/08	117 / 159										
3.0 TD (TFR77)	02/03→01/07	96 / 131										
3.0 TD 4x4 (TFS77)	02/03→01/07	96 / 131										
		266200	Ake		**2184501**	[+] 21845 16.5		Sum		**2187503**	[+] 21875 15.8	
3.5 i (TFS26)	02/03→12/05	147 / 200										
3.5 i 4x4 (TFS26)	02/03→12/05	147 / 200										
3.6 i (TFS27)	01/06→06/08	157 / 214		PRO	**92174803**	ø 280 x 27 x 40				**92091600**	ø 313 x 18 x 80	
3.6 i 4x4 (TFS27)	01/06→06/08	157 / 214										
RODEO Pick-up (RA) 02/03→10/08 → RODEO Pickup (RA), Page 441												
RODEO Pickup (TF) 05/90→08/03												
		266300	Ake		**2154302**	[+] 21543 16.5						
2.2 i (TFR30, TFR25)	06/98→02/03	87 / 118			**92075800**	ø 257 x 22 x 36						
2.3 i (TFR16)	06/91→08/03	69 / 94										
2.8 TD (TFR55)	05/90→02/03	74 / 101										
2.8 TD 4x4 (TFS55)	05/90→02/03	74 / 101										
3.0 TD (TFR77)	12/01→02/03	96 / 131										
3.0 TD 4x4 (TFS77)	12/01→02/03	96 / 131										
		266400	Ake		**2184501**	[+] 21845 16.5		Sum		**2187503**	[+] 21875 15.8	
3.2 4x4 (TFS25)	02/98→02/03	140 / 190										
3.2 i (TFR25)	02/98→02/03	140 / 190		PRO	**92174803**	ø 280 x 27 x 40				**92091600**	ø 313 x 18 x 80	
RODEO Pick-up (TF) 05/90→08/03 → RODEO Pickup (TF), Page 441												
RODEO Platform/Chassis (RA) 02/03→10/08												
		266500	Ake		**2437001**	[+] 24370 16.1	14" -brake					
2.4 i (TFR32)	08/03→07/08	94 / 128		PRO	**92174803**	ø 280 x 27 x 40						
3.0 DiTD (TFR77)	01/07→10/08	117 / 159										
3.0 DiTD 4x4 (TFS77)	01/07→10/08	117 / 159										
3.0 TD (TSR77)	02/03→01/07	96 / 131										
3.0 TD 4x4 (TFS77)	02/03→01/07	96 / 131										
3.5 i (TFR26)	02/03→12/05	147 / 200										
3.5 i 4x4 (TFS26)	02/03→12/05	147 / 200										
3.6 i (TFR27)	01/06→06/08	157 / 214										
3.6 i 4x4 (TFS27)	01/06→06/08	157 / 214										
RODEO Platform/Chassis (TF) 05/90→08/03												
		266600	Ake		**2154302**	[+] 21543 16.5						
2.2 i (TFR30)	06/98→02/03	87 / 118			**92075800**	ø 257 x 22 x 36						
2.3 i (TFR16)	06/91→08/03	69 / 94										
2.8 TD (TFR55)	05/90→02/03	74 / 101										
2.8 TD 4x4 (TFS55)	05/90→02/03	74 / 101										
3.0 TD (TFR77)	12/01→02/03	96 / 131										
3.0 TD 4x4 (TFS77)	12/01→02/03	96 / 131										
		266700	Ake		**2184501**	[+] 21845 16.5						
3.2 i (TFR25)	02/98→02/03	140 / 190										
3.2 i 4x4 (TFS25)	03/98→02/03	140 / 190		PRO	**92174803**	ø 280 x 27 x 40						
RODEO Pritsche/Fahrgestell (RA) 02/03→10/08 → RODEO Platform/Chassis (RA), Page 441												
RODEO Pritsche/Fahrgestell (TF) 05/90→08/03 → RODEO Platform/Chassis (TF), Page 441												
STATESMAN Saloon (VS) 04/95→06/99												
		266800			**2361401**	[–] 23614 14		Luc		**2324204**	[–] 23242 14.2	
3.8 i V6 Supercharged	10/96→06/99	165 / 224										
5.0 i V8	04/95→06/99	168 / 228										
STATESMAN Saloon (WH) 06/99→04/03												
		266900			**2481501**	[–] 24815 14.5		Luc		**2481801**	[–] 24818 18.5	
3.8 i V6	06/99→04/03	147 / 200										
3.8 i V6	08/01→04/03	152 / 207										
3.8 i V6 Supercharged	08/01→04/03	171 / 232										
5.7 i V8	06/99→11/02	220 / 299										
5.7 i V8	11/02→04/03	225 / 306										
STATESMAN Saloon (WK) 05/03→07/04												
		267000			**2481501**	[–] 24815 14.5		Luc		**2481801**	[–] 24818 18.5	
3.8 i V6	05/03→07/04	152 / 207										
3.8 i V6 Supercharged	05/03→07/04	171 / 233										
5.7 i V8	05/03→07/04	245 / 333										
STATESMAN Saloon (WL) 08/04→07/06												
		267100			**2481501**	[–] 24815 14.5		Luc		**2481801**	[–] 24818 18.5	
3.6 VVT	08/04→07/06	190 / 258										
5.7 i V8	08/04→07/06	250 / 340										
6.0 i V8	02/06→07/06	260 / 354										
STATESMAN Saloon (WM) 07/06→												
		267200			**2574501**	[–] 25745 17.5						
3.6 i V6	07/06→	180 / 245										
3.6 i V6	07/06→	195 / 265										
3.6 i V6	07/06→	210 / 286										
6.0 i V8	07/06→	260 / 354										
6.0 i V8	07/06→	270 / 367										
STATESMAN Stufenheck (VS) 04/95→06/99 → STATESMAN Saloon (VS), Page 441												
STATESMAN Stufenheck (WH) 06/99→04/03 → STATESMAN Saloon (WH), Page 441												
STATESMAN Stufenheck (WK) 05/03→07/04 → STATESMAN Saloon (WK), Page 441												
STATESMAN Stufenheck (WL) 08/04→07/06 → STATESMAN Saloon (WL), Page 441												
STATESMAN Stufenheck (WM) 07/06→ → STATESMAN Saloon (WM), Page 441												

30 kW / hp											
TIGRA (XC) 09/05→12/07											
267300											
1.8 09/05→12/07 92 / 125	Luc		2322501	[+] 23225 17		Luc		2328404	[+] 23284 14	⊕ rear disc brake
	Luc		82060200			Luc		82060100		
		PRO	92111103	ø 260 x 24 x 41		Luc		82063300		
								91058200	ø 200 x 46	⊕ rear drum brake
								84058200	bore ø 19 ø 200 x 45	⊕ rear drum brake
							PRO	92111003	ø 240 x 10.2 x 40.5	⊕ rear disc brake
								94024200	ø 200,0 x 52	⊕ rear drum brake
TRAX (TJ) 01/14→											
267400											
1.8 01/14→ 103 / 140			2503401	[+] 25034 18.8				2509602	[+] 25096 16.2	
		epad	2503481	[+] 25034 18.8				82516700		
	Man		82505200				PRO	92205503	ø 268 x 12 x 45.1	
		PRO	92243303	ø 300 x 26 x 45.5						
VECTRA Estate (JS) 08/98→03/03											
267500											
2.2 i 08/98→03/03 104 / 139	Ate		2311502	[o] 23115 19.6		Ate		2105002	[–] 21050 15.2	
			98021100	L660		Ate		82025700		
	Ate		82032000			Ate		82062900		
	Ate		82062900				PRO	92075703	ø 286 x 10 x 69.2	
		PRO	92075603	ø 288 x 25 x 42				91018400	ø 160 x 24.5	
								97008400		
VECTRA Hatchback (JS) 08/98→03/03											
267600											
2.0 i 12/98→11/00 100 / 136 2.2 i 11/00→03/03 104 / 139 2.5 i 08/98→12/02 125 / 170 2.6 i V6 11/00→12/02 125 / 167	Ate		2311502	[o] 23115 19.6		Ate		2105002	[–] 21050 15.2	
			98021100	L660		Ate		82025700		
	Ate		82032000			Ate		82062900		
	Ate		82062900				PRO	92075703	ø 286 x 10 x 69.2	
		PRO	92075603	ø 288 x 25 x 42				91018400	ø 160 x 24.5	
								97008400		
VECTRA Hatchback (ZC) 04/02→12/06											
267700											
2.2 i 04/02→12/06 108 / 147	Ate		2340404	[o] 23404 20.4	⊕ police veh. ⊕ sports susp.	Ate		2413701	[–] 24137 16.7	
	Ate		2373807	[o] 23738 20.6		Ate	epad	2413781	[–] 24137 16.7	
			98029100	L685	→48045597 →41048789	Ate		82062900		
	Ate		82029300			Ate		82503500		
	Ate		82062900				PRO	92118503	ø 278 x 12 x 41.5	
		PRO	92118303	ø 302 x 28 x 45	⊕ police veh. ⊕ sports susp.		PRO	92118403	ø 292 x 20 x 41.5	
		PRO	92118703	ø 285 x 25 x 41.9						
267800											
3.2 i 08/02→12/06 155 / 211	Ate		2022401	[o] 20224 20.9	31070294→ 38047798→	Ate		2413701	[–] 24137 16.7	
	Ate		2340404	[o] 23404 20.4	→31070293 →38047797	Ate	epad	2413781	[–] 24137 16.7	
			98029700	L693	→48045597 →41048789 38047798→ 31070294→	Ate		82062900		
			98030100	L302	48045598→ 41048790→	Ate		82503500		
	Ate		82029300		→38047797		PRO	92118503	ø 278 x 12 x 41.5	
	Ate		82062900				PRO	92118403	ø 292 x 20 x 41.5	
		PRO	92118303	ø 302 x 28 x 45	→31070293 →38047797					

→

		kW / hp										
VECTRA Hatchback (ZC) 04/02→12/06												
267800												
3.2 i	08/02→12/06	155 / 211		PRO 92118803	ø 314 x 28 x 44.9	31070294→ 38047798→						
VECTRA Kombi (JS) 08/98→03/03 → VECTRA Estate (JS), Page 442												
VECTRA Saloon (JS) 08/98→07/02												
267900			Ate	2311502	[o] 23115 19.6		Ate	2105002	[–] 21050 15.2			
2.0 i	12/98→11/00	100 / 136		98021100	L660		Ate	82025700				
2.2 i	08/98→07/02	104 / 139	Ate	82032000			Ate	82062900				
2.6 i V6	07/00→07/02	125 / 170	Ate	82062900				PRO 92075703	ø 286 x 10 x 69.2			
				PRO 92075603	ø 288 x 25 x 42			91018400	ø 160 x 24.5			
								97008400				
VECTRA Saloon (ZC) 04/02→12/06												
268000			Ate	2340404	[o] 23404 20.4	⊕ police veh. ⊕ sports susp.	Ate	2413701	[–] 24137 16.7			
2.2 i	04/02→12/06	108 / 147	Ate	2373807	[o] 23738 20.6		Ate epad	2413781	[–] 24137 16.7			
				98029100	L685	→48045597 →41048789	Ate	82062900				
			Ate	82029300			Ate	82503500				
			Ate	82062900				PRO 92118503	ø 278 x 12 x 41.5			
				PRO 92118303	ø 302 x 28 x 45	⊕ police veh. ⊕ sports susp.		PRO 92118403	ø 292 x 20 x 41.5			
				PRO 92118703	ø 285 x 25 x 41.9							
268100			Ate	2022401	[o] 20224 20.9	31070294→ 38047798→	Ate	2413701	[–] 24137 16.7			
3.2 i	08/02→12/06	155 / 211	Ate	2340404	[o] 23404 20.4	→31070293 →38047797	Ate epad	2413781	[–] 24137 16.7			
				98029700	L693	→48045597 →41048789 38047798→ 31070294→	Ate	82062900				
				98030100	L302	48045598→ 41048790→	Ate	82503500				
			Ate	82029300		→38047797		PRO 92118503	ø 278 x 12 x 41.5			
			Ate	82062900				PRO 92118403	ø 292 x 20 x 41.5			
				PRO 92118303	ø 302 x 28 x 45	→31070293 →38047797						
				PRO 92118803	ø 314 x 28 x 44.9	31070294→ 38047798→						
VECTRA Schrägheck (JS) 08/98→03/03 → VECTRA Hatchback (JS), Page 442												
VECTRA Schrägheck (ZC) 04/02→12/06 → VECTRA Hatchback (ZC), Page 442												
VECTRA Stufenheck (JS) 08/98→07/02 → VECTRA Saloon (JS), Page 443												
VECTRA Stufenheck (ZC) 04/02→12/06 → VECTRA Saloon (ZC), Page 443												
VIVA Estate (JF) 03/05→12/09												
268200			Ake	2323401	[+] 23234 16.9		Sum	2407101	[–] 24071 14.6			
1.8 i	03/05→12/09	89 / 121	Ake	82508400				82502300				
				92133600	ø 256 x 24 x 47.2			92163000	ø 258 x 10.6 x 57.5			
VIVA Hatchback (JF) 03/05→12/09												
268300			Ake	2323401	[+] 23234 16.9		Sum	2407101	[–] 24071 14.6			
1.8 i	03/05→12/09	89 / 121	Ake	82508400				82502300				
				92133600	ø 256 x 24 x 47.2			92163000	ø 258 x 10.6 x 57.5			
VIVA Kombi (JF) 03/05→12/09 → VIVA Estate (JF), Page 443												
VIVA Saloon (JF) 03/05→12/09												
268400			Ake	2323401	[+] 23234 16.9		Sum	2407101	[–] 24071 14.6			
1.8 i	03/05→12/09	89 / 121	Ake	82508400				82502300				
				92133600	ø 256 x 24 x 47.2			92163000	ø 258 x 10.6 x 57.5			
VIVA Schrägheck (JF) 03/05→12/09 → VIVA Hatchback (JF), Page 443												

HOLDEN

HOLDEN

		kW / hp									
VIVA Stufenheck (JF) 03/05→12/09 → VIVA Saloon (JF), Page 443											
VOLT 11/11→											
		268500		**2503401**	[+] 25034 18.8			**2509602**	[+] 25096 16.2	
EV 150	11/11→	111 / 151	epad	**2503481**	[+] 25034 18.8					
ZAFIRA (TT) 06/01→02/06											
		268600	Ate	**2383201**	[+] 23832 19.6		Bos	**2325803**	[+] 23258 16.9	Bosch
2.2 i	06/01→02/06	108 / 147	Ate epad	**2383281**	[+] 23832 19.6		Luc	**2341703**	[+] 23417 15.2	Lucas
				98029800	L750	⊖ elec. damp. susp.	Luc	**82060100**		
				98031400	L287	⊕ elec. damp. susp.	Luc	**82063300**		
			Ate	**82032000**			Bos	**82063700**		
			Ate	**82062900**						
			PRO	**92091903**	ø 280 x 25 x 42		PRO	**92092103**	ø 264 x 10 x 42	

HONDA

HONDA

		kW / hp									
ACCORD VI (CG, CK) 10/98→06/03											
		268700	Gir	**2309601**	[+] 23096 17.2			**91055200**	ø 228.6 x 42	
1.6 i	10/98→12/02	85 / 116								
1.6 LS	10/98→12/02	79 / 107	Luc	**82061200**				**97016200**		
				92078200	ø 260 x 23 x 47.1			**84055200**	bore ø 20.6 ø 228.6 x 42	
		268800	Luc	**2309401**	[+] 23094 17		Luc	**2352701**	[+] 23527 15	
1.8 i	10/98→12/02	100 / 136								
2.0 i	10/98→01/01	108 / 147								
2.0 Turbo DI	02/99→12/02	77 / 105	Luc	**82061200**			Luc	**82058900**		
				92110100	ø 282 x 25 x 47		Luc	**82063300**		
								92138600	ø 260 x 10 x 64	
		268900	Ake	**2165101**	[+] 21651 17.3		Luc	**2352701**	[+] 23527 15	
2.2 Type-R	02/99→12/02	156 / 212								
			Ake	**82049600**			Luc	**82058900**		
			Ake	**82063000**			Luc	**82063300**		
				92110200	ø 300 x 28 x 47.2		PRO	**92169703**	ø 260 x 10 x 63.7	
		269000	Luc	**2309401**	[+] 23094 17		Luc	**2352701**	[+] 23527 15	
2.3 (CK2)	01/01→06/03	113 / 154								
			Luc	**82061200**			Luc	**82058900**		
				92110100	ø 282 x 25 x 47		Luc	**82063300**		
		269100	Ake	**2149701**	[+] 21497 18		Ake	**2171901**	[+] 21719 14.6	
2.4 (CG5)	01/99→12/99	118 / 160								
3.0 Vtec (CK1)	10/98→12/02	147 / 200	Ake	**2165101**	[+] 21651 17.3					
ACCORD VI Aerodeck (CM) 02/98→											
		269200	Ake	**2165101**	[+] 21651 17.3		Luc	**2352701**	[+] 23527 15	
2.3 16 V	02/98→	118 / 160								
			Ake	**82049600**			Luc	**82058900**		
			Ake	**82063000**			Luc	**82063300**		
ACCORD VI Coupe (CG) 02/98→06/03											
		269300	Ake	**2165101**	[+] 21651 17.3		Ake	**2171901**	[+] 21719 14.6	
2.0	11/99→10/02	107 / 145								
2.0 i 16V	02/98→06/03	108 / 147	Ake	**82049600**			Ake	**82049600**		
			Ake	**82063000**			Ake	**82063000**		
								92138600	ø 260 x 10 x 64	⊕ ABS
		269400	Ake	**2165101**	[+] 21651 17.3		Ake	**2171901**	[+] 21719 14.6	
3.0 V6 24V	02/98→06/03	147 / 200								
3.0 Vtec	10/01→06/03	152 / 207	Ake	**82049600**			Ake	**82049600**		

		kW / hp											
ACCORD VI Coupe (CG) 02/98→06/03													
		269400	Ake		82063000			Ake		82063000		
3.0 V6 24V	02/98→06/03	147 / 200							PRO	92172103	ø 260 x 9 x 49	
3.0 Vtec	10/01→06/03	152 / 207										
ACCORD VI Hatchback (CH) 12/99→12/02												
		269500	Luc		2309401	[+] 23094 17		Luc		2352701	[+] 23527 15	
1.6	12/99→12/02	85 / 116	Luc		82061200			Luc		82058900		
					92110100	ø 282 x 25 x 47		Luc		82063300		
										91055200	ø 228.6 x 42	
										97016200		
										84055200	bore ø 20.6 ø 228.6 x 42	
										92138600	ø 260 x 10 x 64	
		269600	Luc		2309401	[+] 23094 17		Luc		2352701	[+] 23527 15	
1.8 i (CH6)	12/99→12/02	100 / 136	Luc		82061200			Luc		82058900		
2.0 (CH7)	12/99→12/02	108 / 147			92110100	ø 282 x 25 x 47		Luc		82063300		
2.0 TDi	12/99→10/00	77 / 105								92138600	ø 260 x 10 x 64	
2.3 (CL4)	11/00→12/02	113 / 154										
ACCORD VI Saloon (CG, CK) 10/98→06/03 → ACCORD VI (CG, CK), Page 444												
ACCORD VI Stufenheck (CG, CK) 10/98→06/03 → ACCORD VI (CG, CK), Page 444												
ACCORD VII (CL) 02/03→12/08												
		269700	Ate		2372001	[+] 23720 17	SEA -brake	Ake		2171901	[+] 21719 14.6	SDC -brake
2.0 (CL7)	02/03→	114 / 155										
2.0 All-wheel Drive (CL8)	02/03→	114 / 155	Ake		2386801	[+] 23868 16.9	SDC -brake	Luc		2352701	[+] 23527 15	SEA -brake
2.4 (CL9)	02/03→	140 / 190	Ake		82512400		SDC -brake	Ake		82049600		SDC -brake
			Ate		82032000		SEA -brake	Luc		82058900		SEA -brake
					92140900	ø 300 x 25 x 47	⊕ rim size 16" SEA -brake			92144600	ø 260 x 10 x 49	SEA -brake
					92146600	ø 280 x 25 x 47.1	⊕ rim size 15" SEA -brake		PRO	92144603	ø 260 x 10 x 49	SEA -brake
				PRO	92140903	ø 300 x 25 x 47	⊕ rim size 16" SEA -brake		PRO	92227603	ø 259.7 x 9 x 49.2	SDC -brake
				PRO	92146603	ø 280 x 25 x 47.1	⊕ rim size 15" SEA -brake					
				PRO	92227503	ø 282 x 23 x 47	⊕ rim size 15" SDC -brake					
		269800	Ate		2372001	[+] 23720 17		Luc		2352701	[+] 23527 15	
2.0 R	06/03→12/08	160 / 218	Ate		82032000					92144600	ø 260 x 10 x 49	
					92140900	ø 300 x 25 x 47			PRO	92144603	ø 260 x 10 x 49	
				PRO	92140903	ø 300 x 25 x 47						
		269900	Ate		2372001	[+] 23720 17	SEA -brake	Luc		2352701	[+] 23527 15	SEA -brake Lucas
2.2 i-CTDi	01/04→	103 / 140	Ate		82032000		SEA -brake	Ake		2423101	[+] 24231 14.9	Akebono
					92140900	ø 300 x 25 x 47	⊕ rim size 16" SEA -brake	Luc		82058900		SEA -brake
				PRO	92140903	ø 300 x 25 x 47	⊕ rim size 16" SEA -brake			92144600	ø 260 x 10 x 49	SEA -brake
									PRO	92144603	ø 260 x 10 x 49	SEA -brake
		270000	Ate		2372001	[+] 23720 17	SEA -brake	Ake		2171901	[+] 21719 14.6	SDC -brake
2.4	09/06→	113 / 154	Ake		2386801	[+] 23868 16.9	SDC -brake	Luc		2352701	[+] 23527 15	SEA -brake
			Ake		82512400		SDC -brake	Ake		82049600		SDC -brake
			Ate		82032000					92144600	ø 260 x 10 x 49	SEA -brake
					92140900	ø 300 x 25 x 47	⊕ rim size 16" SEA -brake		PRO	92144603	ø 260 x 10 x 49	SEA -brake
					92146600	ø 280 x 25 x 47.1	⊕ rim size 15" SEA -brake		PRO	92227603	ø 259.7 x 9 x 49.2	SDC -brake

30 kW / hp												
ACCORD VII (CL) 02/03→12/08												
270000												
2.4	09/06→	113 / 154		PRO 92140903	ø 300 x 25 x 47	⊕ rim size 16" SEA -brake						
				PRO 92146603	ø 280 x 25 x 47.1	⊕ rim size 15" SEA -brake						
				PRO 92227503	ø 282 x 23 x 47	⊕ rim size 15" SDC -brake						
270100			Ate	2372001	[+] 23720 17	SEA -brake	Luc		2352701	[+] 23527 15	SEA -brake	
2.4	01/08→	132 / 180	Ate	82032000		SEA -brake	Luc		82058900		SEA -brake	
				92140900	ø 300 x 25 x 47	⊕ rim size 16" SEA -brake			92144600	ø 260 x 10 x 49	SEA -brake	
				PRO 92140903	ø 300 x 25 x 47	⊕ rim size 16" SEA -brake		PRO	92144603	ø 260 x 10 x 49	SEA -brake	
270200			Ake	2386801	[+] 23868 16.9	SDC -brake	Ake		2171901	[+] 21719 14.6	SDC -brake	
2.4 Vtec	04/06→07/08	122 / 166	Ake	82512400			Ake		82049600		SDC -brake	
				PRO 92227503	ø 282 x 23 x 47	⊕ rim size 15" SDC -brake		PRO	92227603	ø 259.7 x 9 x 49.2	SDC -brake	
270300			Ake	2386801	[+] 23868 16.9	SDC -brake	Ake		2171901	[+] 21719 14.6	SDC -brake	
3.0	04/06→05/08	182 / 247	Sum	2405301	[+] 24053 16.9		Ake		82049600		SDC -brake	
				82061300				PRO	92227603	ø 259.7 x 9 x 49.2	SDC -brake	
				PRO 92227503	ø 282 x 23 x 47	⊕ rim size 15" SDC -brake						
ACCORD VII (CM) 02/03→01/08												
270400			Ate	2372001	[+] 23720 17	SEA -brake	Ake		2171901	[+] 21719 14.6	SDC -brake	
2.4 Vtec E (CM5)	02/03→09/05	118 / 160	Ake	2386801	[+] 23868 16.9	SDC -brake	Luc		2352701	[+] 23527 15	SEA -brake	
			Ake	82512400		SDC -brake	Ake		82049600		SDC -brake	
			Ate	82032000		SEA -brake	Luc		82058900		SEA -brake	
				92140900	ø 300 x 25 x 47	⊕ rim size 16" SEA -brake			92144600	ø 260 x 10 x 49	SEA -brake	
				92146600	ø 280 x 25 x 47.1	⊕ rim size 15" SEA -brake		PRO	92144603	ø 260 x 10 x 49	SEA -brake	
				PRO 92140903	ø 300 x 25 x 47	⊕ rim size 16" SEA -brake		PRO	92227603	ø 259.7 x 9 x 49.2	SDC -brake	
				PRO 92146603	ø 280 x 25 x 47.1	⊕ rim size 15" SEA -brake						
				PRO 92227503	ø 282 x 23 x 47	⊕ rim size 15" SDC -brake						
270500			Ake	2386801	[+] 23868 16.9	SDC -brake	Ake		2171901	[+] 21719 14.6	SDC -brake	
2.4 Vtec E (CM5)	06/06→01/08	125 / 170	Ake	82512400			Ake		82049600		SDC -brake	
				PRO 92227503	ø 282 x 23 x 47	⊕ rim size 15" SDC -brake		PRO	92227603	ø 259.7 x 9 x 49.2	SDC -brake	
270600			Ake	2386801	[+] 23868 16.9	SDC -brake	Ake		2171901	[+] 21719 14.6	SDC -brake	
3.0 (CM6)	09/06→	177 / 241		82061300			Ake		82049600		SDC -brake	
				PRO 92227503	ø 282 x 23 x 47	⊕ rim size 15" SDC -brake		PRO	92227603	ø 259.7 x 9 x 49.2	SDC -brake	
ACCORD VII (CP) 09/07→												
270700			Sum	2405301	[+] 24053 16.9							
2.4 (CP2)	02/08→	136 / 185										
3.5 V 6 (CP3)	09/07→	202 / 275										
ACCORD VII Tourer (CM) 04/03→09/05												
270800			Ate	2372001	[+] 23720 17	SEA -brake	Ake		2171901	[+] 21719 14.6	SDC -brake	
2.0 (CM1)	04/03→	114 / 155										
2.4 (CM2)	04/03→	140 / 190	Ake	2386801	[+] 23868 16.9	SDC -brake	Luc		2352701	[+] 23527 15	SEA -brake	
			Ake	82512400		SDC -brake	Ake		82049600		SDC -brake	
			Ate	82032000		SEA -brake	Luc		82058900		SEA -brake	
				92140900	ø 300 x 25 x 47	⊕ rim size 16" SEA -brake			92144600	ø 260 x 10 x 49	SEA -brake	
				92146600	ø 280 x 25 x 47.1	⊕ rim size 15" SEA -brake			92165800	ø 282 x 9 x 61		
				PRO 92140903	ø 300 x 25 x 47	⊕ rim size 16" SEA -brake		PRO	92144603	ø 260 x 10 x 49	SEA -brake	
				PRO 92146603	ø 280 x 25 x 47.1	⊕ rim size 15" SEA -brake		PRO	92165803	ø 282 x 9 x 61		

→

		kW / hp										
ACCORD VII Tourer (CM) 04/03→09/05												
		270800			92227503	ø 282 x 23 x 47	⊕ rim size 15" SDC -brake			92227603	ø 259.7 x 9 x 49.2	SDC -brake
2.0 (CM1)	04/03→	114 / 155										
2.4 (CM2)	04/03→	140 / 190										
		270900	Ate		2372001	[+] 23720 17	SEA -brake	Luc		2352701	[+] 23527 15	SEA -brake Lucas
2.2 i-CTDi	01/04→	103 / 140	Ate		82032000		SEA -brake	Ake		2423101	[+] 24231 14.9	Akebono
					92140900	ø 300 x 25 x 47	⊕ rim size 16" SEA -brake	Luc		82058900		SEA -brake
					92140903	ø 300 x 25 x 47	⊕ rim size 16" SEA -brake			92144600	ø 260 x 10 x 49	SEA -brake
										92165800	ø 282 x 9 x 61	
										92144603	ø 260 x 10 x 49	SEA -brake
										92165803	ø 282 x 9 x 61	
		271000	Ate		2372001	[+] 23720 17	SEA -brake	Ake		2171901	[+] 21719 14.6	SDC -brake
2.4 Vtec E	09/03→09/05	118 / 160	Ake		2386801	[+] 23868 16.9	SDC -brake	Luc		2352701	[+] 23527 15	SEA -brake
			Ake		82512400		SDC -brake	Ake		82049600		SDC -brake
			Ate		82032000		SEA -brake	Luc		82058900		SEA -brake
					92140900	ø 300 x 25 x 47	⊕ rim size 16" SEA -brake			92144600	ø 260 x 10 x 49	SEA -brake
					92146600	ø 280 x 25 x 47.1	⊕ rim size 15" SEA -brake			92144603	ø 260 x 10 x 49	SEA -brake
					92140903	ø 300 x 25 x 47	⊕ rim size 16" SEA -brake			92227603	ø 259.7 x 9 x 49.2	SDC -brake
					92146603	ø 280 x 25 x 47.1	⊕ rim size 15" SEA -brake					
					92227503	ø 282 x 23 x 47	⊕ rim size 15" SDC -brake					
		271100	Ate		2372001	[+] 23720 17	SEA -brake	Luc		2352701	[+] 23527 15	SEA -brake
2.4 Vtec T	09/03→	147 / 200	Ate		82032000		SEA -brake	Luc		82058900		SEA -brake
					92140900	ø 300 x 25 x 47	⊕ rim size 16" SEA -brake			92144600	ø 260 x 10 x 49	SEA -brake
					92140903	ø 300 x 25 x 47	⊕ rim size 16" SEA -brake			92144603	ø 260 x 10 x 49	SEA -brake
ACCORD VIII (CU) 06/08→												
		271200	Ake		2476601	[+] 24766 17.5	⊕ autom.	Nis		2443402	[+] 24434 15.6	⊕ autom.
2.0 i	07/08→	110 / 150										
2.0 i	07/08→	115 / 156	Ate		2479601	[+] 24796 17.5	⊕ man.	Nis		2443501	[+] 24435 14.8	⊕ man.
			Ake		82518500		⊕ autom.	Ake		82049600		⊕ autom.
			Ate		82032000		⊕ man.	Nis		82505000		⊕ man.
					92194900	ø 320 x 32 x 47.2	⊕ autom.			92195100	ø 304.8 x 9 x 61	⊕ autom.
					92195000	ø 296 x 25 x 47.2	⊕ man.			92204300	ø 282 x 9 x 48.7	⊕ man.
		271300	Ake		2476601	[+] 24766 17.5	⊕ autom.	Nis		2443402	[+] 24434 15.6	⊕ autom.
2.2 i-DTEC	07/08→	110 / 150										
2.2 i-DTEC	07/08→	132 / 180	Ate		2479601	[+] 24796 17.5	⊕ man.	Nis		2443501	[+] 24435 14.8	⊕ man.
			Ake		82518500		⊕ autom.	Ake		82049600		⊕ autom.
			Ate		82032000		⊕ man.	Nis		82505000		⊕ man.
					92194900	ø 320 x 32 x 47.2	⊕ autom.			92195100	ø 304.8 x 9 x 61	⊕ autom.
					92195000	ø 296 x 25 x 47.2	⊕ man.			92204300	ø 282 x 9 x 48.7	⊕ man.
										91077700	ø 190 x 27	
										97038700		
		271400	Ake		2476601	[+] 24766 17.5	⊕ autom.	Nis		2443402	[+] 24434 15.6	⊕ autom.
2.4 (CU6)	06/08→12/08	148 / 201										
2.4 i	07/08→	133 / 181										
2.4 i	07/08→	148 / 201	Ate		2479601	[+] 24796 17.5	⊕ man.	Nis		2443501	[+] 24435 14.8	⊕ man.
			Ake		82518500		⊕ autom.	Ake		82049600		⊕ autom.
			Ate		82032000		⊕ man.	Nis		82505000		⊕ man.

F - H

		kW / hp										
ACCORD VIII (CU) 06/08→												
271400												
2.4 (CU6)	06/08→12/08	148 / 201		92194900	ø 320 x 32 x 47.2	⊕ autom.		92195100	ø 304.8 x 9 x 61	⊕ autom.		
2.4 i	07/08→	133 / 181		92195000	ø 296 x 25 x 47.2	⊕ man.		92204300	ø 282 x 9 x 48.7	⊕ man.		
2.4 i	07/08→	148 / 201						91077700	ø 190 x 27			
								97038700				
ACCORD VIII Estate 07/08→												
271500			Ake	2476601	[+] 24766 17.5	⊕ autom.	Nis	2443402	[+] 24434 15.6	⊕ autom.		
2.0 i	07/08→	110 / 150	Ate	2479601	[+] 24796 17.5	⊕ man.	Nis	2443501	[+] 24435 14.8	⊕ man.		
2.0 i	07/08→	115 / 156	Ake	82518500		⊕ autom.	Ake	82049600		⊕ autom.		
			Ate	82032000		⊕ man.	Nis	82505000		⊕ man.		
				92194900	ø 320 x 32 x 47.2	⊕ autom.		92195100	ø 304.8 x 9 x 61	⊕ autom.		
				92195000	ø 296 x 25 x 47.2	⊕ man.		92204300	ø 282 x 9 x 48.7	⊕ man.		
271600			Ake	2476601	[+] 24766 17.5	⊕ autom.	Nis	2443402	[+] 24434 15.6	⊕ autom.		
2.2 i-DTEC	07/08→	110 / 150	Ate	2479601	[+] 24796 17.5	⊕ man.	Nis	2443501	[+] 24435 14.8	⊕ man.		
2.2 i-DTEC	07/08→	132 / 180	Ake	82518500		⊕ autom.	Ake	82049600		⊕ autom.		
			Ate	82032000		⊕ man.	Nis	82505000		⊕ man.		
				92194900	ø 320 x 32 x 47.2	⊕ autom.		92195100	ø 304.8 x 9 x 61	⊕ autom.		
				92195000	ø 296 x 25 x 47.2	⊕ man.		92204300	ø 282 x 9 x 48.7	⊕ man.		
								91077700	ø 190 x 27			
								97038700				
271700			Ake	2476601	[+] 24766 17.5	⊕ autom.	Nis	2443402	[+] 24434 15.6	⊕ autom.		
2.4 i	07/08→	148 / 201	Ate	2479601	[+] 24796 17.5	⊕ man.	Nis	2443501	[+] 24435 14.8	⊕ man.		
			Ake	82518500		⊕ autom.	Ake	82049600		⊕ autom.		
			Ate	82032000		⊕ man.	Nis	82505000		⊕ man.		
				92194900	ø 320 x 32 x 47.2	⊕ autom.		92195100	ø 304.8 x 9 x 61	⊕ autom.		
				92195000	ø 296 x 25 x 47.2	⊕ man.		92204300	ø 282 x 9 x 48.7	⊕ man.		
								91077700	ø 190 x 27			
								97038700				

ACCORD VIII Kombi 07/08→ → ACCORD VIII Estate, Page 448

ACCORD VIII TOURER 07/08→ → ACCORD VIII Estate, Page 448

ACCORD EURO VII (CL) 02/03→12/08 → ACCORD VII (CL), Page 445

ACCORD EURO VIII Saloon (CU) 06/08→ → ACCORD VIII (CU), Page 447

ACCORD EURO VIII Stufenheck (CU) 06/08→ → ACCORD VIII (CU), Page 447

ACCORD Mk VII (CG, CK) 10/98→06/03 → ACCORD VI (CG, CK), Page 444

ACCORD Mk VII Aerodeck (CM) 02/98→ → ACCORD VI Aerodeck (CM), Page 444

ACCORD Mk VII Coupe (CG) 02/98→06/03 → ACCORD VI Coupe (CG), Page 444

ACCORD Mk VII Estate (CM) 02/98→ → ACCORD VI Aerodeck (CM), Page 444

ACCORD Mk VII Hatchback (CH) 12/99→12/02 → ACCORD VI Hatchback (CH), Page 445

AIRWAVE 06/04→												
271800			Ake	2169401	[+] 21694 17.3			91042300	ø 220 x 36			
1.5	06/04→	81 / 110										
1.5 iDSi MDS 4x4	06/04→	81 / 110						97013600				

Ballade VI Stufenheck (EJ, EK) 10/95→02/01 → CIVIC VI Saloon (EJ, EK), Page 451

BALLADE VIII Stufenheck (FD, FA) 09/05→09/10 → CIVIC VIII Saloon (FD, FA), Page 454

CAPA 01/98→09/02												
271900			Ake	2169701	[+] 21697 15.8			91042300	ø 220 x 36			
1.5 16V	04/98→09/02	72 / 98										
1.5 4x4	01/98→09/02	72 / 98										

→

		kW / hp											
CAPA 01/98→09/02													
1.6 Vtec	01/98→09/02	125 / 170	Ake		82060600								
CITY Saloon (GM) 09/08→													
		272000	Ake		2169701	[+] 21697 15.8		Ake		2173801	[+] 21738 13		
1.4 i-V TEC	09/08→	73 / 99	Ake		82060600								
					92165900	ø 258 x 21 x 39.2							
		272100						Ake		2131201	[+] 21312 13		
1.5	02/09→	88 / 120											
CITY Stufenheck (GM) 09/08→ → CITY Saloon (GM), Page 449													
CITY Stufenheck 05/03→ → JAZZ Saloon, Page 457													
CIVIC VI Aerodeck (MB, MC) 04/98→02/01													
		272200	Luc		2151503	[+] 21515 18		Ake		2131201	[+] 21312 13	⊕ rear disc brake →12/98	
1.4 16V (MB8)	04/98→02/01	55 / 75											
1.4 16V (MB8)	04/98→02/01	66 / 90											
1.5 16V (MB9)	04/98→02/01	84 / 114	Luc		82061100			Ake		2171901	[+] 21719 14.6	01/99→	
				PRO	92060903	ø 262 x 21 x 44.6		Ake		82048500		⊕ rear disc brake	
								Ake		82063000			
										91043900	ø 203.2 x 38	⊕ rear drum brake	
										97037200			
										92060800	ø 239 x 10 x 48.1	→12/98	
										92125300	ø 260 x 10 x 48.7	01/99→	
										94017600	ø 203,0 x 45.5	⊕ rear drum brake	
		272300	Luc		2151503	[+] 21515 18		Ake		2131201	[+] 21312 13	⊕ rear disc brake →12/98	
1.6 16V (MC1)	04/98→02/01	85 / 116											
1.6 16V (MC1)	04/98→02/01	92 / 125	Luc		82061100			Ake		2171901	[+] 21719 14.6	01/99→	
				PRO	92060903	ø 262 x 21 x 44.6		Ake		82048500		⊕ rear disc brake	
								Ake		82063000			
										92060800	ø 239 x 10 x 48.1	→12/98	
										92125300	ø 260 x 10 x 48.7	01/99→	
		272400	Ake		2165101	[+] 21651 17.3		Ake		2171901	[+] 21719 14.6		
1.8 16V (MC2)	04/98→02/01	124 / 169			92078300	ø 282 x 23 x 47.1		Ake		82049600			
								Ake		82063000			
										92081700	ø 260 x 10 x 48.6		
		272500	Luc		2151503	[+] 21515 18		Ake		2131201	[+] 21312 13	⊕ rear disc brake	
2.0 i D (MC3)	04/98→02/01	74 / 101											
2.0 i D (MC3)	04/98→02/01	77 / 105	Luc		82061100			Ake		82048500		⊕ rear disc brake	
				PRO	92060903	ø 262 x 21 x 44.6		Ake		82063000			
										92060800	ø 239 x 10 x 48.1		
CIVIC VI Coupe (EJ, EM1) 03/96→12/00													
		272600	Ake		2169401	[+] 21694 17.3		Ake		2173801	[+] 21738 13	⊕ rear disc brake	
1.6	05/96→04/99	77 / 105											
1.6 i	03/96→03/00	77 / 105	Ake		82060600			Ake		82048500		⊕ rear disc brake	
1.6 i Vtec	03/96→03/00	92 / 125											
1.6 i Vtec	04/99→12/00	118 / 160		PRO	92060903	ø 262 x 21 x 44.6		Ake		82063000			
										91039601	ø 200 x 36	⊕ rear drum brake	
										97028000			
										92077900	ø 239 x 9 x 47.6		
										94015300	ø 200,0 x 42.5	⊕ rear drum brake	
CIVIC VI Fastback (MA, MB) 09/94→02/01													
		272700	Ake		2132201	[+] 21322 15	Akebono	Ake		2131201	[+] 21312 13	⊕ rear disc brake	
1.4 i (MA8, MB2)	09/94→02/01	66 / 90											

F - H

		kW / hp										
CIVIC VI Fastback (MA, MB) 09/94→02/01												
1.4 i (MA8, MB2)	09/95→02/01	55 / 75	Luc		**2151503**	[+] 21515 18	Lucas	Ake		**82048500**		⊕ rear disc brake
			Luc		**82061100**		Lucas	Ake		**82063000**		
				PRO	**92060903**	ø 262 x 21 x 44.6				**91043900**	ø 203.2 x 38	⊕ rear drum brake
								Lkh		**97013500**		
										83043901	bore ø 19 ø 203.2 x 38	
										92060800	ø 239 x 10 x 48.1	
										94017600	ø 203,0 x 45.5	
		272800	Luc		**2151503**	[+] 21515 18		Ake		**2131201**	[+] 21312 13	⊕ rear disc brake →10/98
1.5 16V (MB3)	01/97→02/01	84 / 114										
1.6 16V (MB4)	01/97→02/01	85 / 116										
2.0 i TD (MB7)	01/97→02/01	63 / 86	Luc		**82061100**			Ake		**2171901**	[+] 21719 14.6	⊕ rear disc brake 11/98→
				PRO	**92060903**	ø 262 x 21 x 44.6		Ake		**82048500**		⊕ rear disc brake →10/98
								Ake		**82049600**		11/98→
								Ake		**82063000**		
										91039601	ø 200 x 36	⊕ rear drum brake
								Lkh		**97013500**		
										97028000		
										92060800	ø 239 x 10 x 48.1	
										94015300	ø 200,0 x 42.5	⊕ rear drum brake
		272900	Ake		**2169401**	[+] 21694 17.3		Ake		**2131201**	[+] 21312 13	⊕ rear disc brake
1.6 VTi	01/97→02/01	118 / 160	Ake		**82060600**			Ake		**82048500**		⊕ rear disc brake
				PRO	**92060903**	ø 262 x 21 x 44.6		Ake		**82063000**		
										91039601	ø 200 x 36	⊕ rear drum brake
										92077900	ø 239 x 9 x 47.6	
										94015300	ø 200,0 x 42.5	⊕ rear drum brake
		273000	Ake		**2165101**	[+] 21651 17.3		Ake		**2171901**	[+] 21719 14.6	
1.8 16V (MB6)	01/97→02/01	124 / 169						Ake		**82049600**		
								Ake		**82063000**		
										92081700	ø 260 x 10 x 48.6	
CIVIC VI Hatchback (EJ, EK) 10/95→02/01												
		273100	Ake		**2169401**	[+] 21694 17.3	01/98→			**91039601**	ø 200 x 36	
1.4 i (EJ9)	11/95→02/01	55 / 75										
1.4 LPG	01/97→02/01	66 / 90	Ake		**2169701**	[+] 21697 15.8	→12/97			**97028000**		
			Ake		**82060600**					**83039601**	bore ø 19 ø 200 x 36	
					92077800	ø 240 x 21 x 44.7				**94015300**	ø 200,0 x 42.5	
				PRO	**92060903**	ø 262 x 21 x 44.6						
		273200	Ake		**2169401**	[+] 21694 17.3	01/98→			**91039601**	ø 200 x 36	
1.4 i S (EJ9)	11/95→02/01	66 / 90	Ake		**2169701**	[+] 21697 15.8	→12/97			**97028000**		
			Ake		**82060600**		→12/97			**83039601**	bore ø 19 ø 200 x 36	
			Ake		**82060600**		01/98→			**94015300**	ø 200,0 x 42.5	
					92077800	ø 240 x 21 x 44.7						
				PRO	**92060903**	ø 262 x 21 x 44.6						
		273300	Ake		**2169401**	[+] 21694 17.3		Ake		**2173801**	[+] 21738 13	⊕ rear disc brake
1.5 i (EK3)	11/95→02/01	84 / 114										
1.6 i (EK1)	11/95→02/01	84 / 114										
1.6 VTi (EK4)	11/95→02/01	118 / 160										

→

		kW / hp										
CIVIC VI Hatchback (EJ, EK) 10/95→02/01												
273300			Ake		82060600			Ake		82048500		⊕ rear disc brake
1.5 i (EK3)	11/95→02/01	84 / 114		PRO	92060903	ø 262 x 21 x 44.6		Ake		82063000		
1.6 i (EK1)	11/95→02/01	84 / 114								91039601	ø 200 x 36	⊕ rear drum brake
1.6 VTi (EK4)	11/95→02/01	118 / 160								97028000		
										83039601	bore ø 19 ø 200 x 36	⊕ rear drum brake
										92077900	ø 239 x 9 x 47.6	
										94015300	ø 200,0 x 42.5	⊕ rear drum brake
273400			Luc		2151503	[+] 21515 18		Ake		2131201	[+] 21312 13	
1.6	10/95→09/00	93 / 126	Luc		82061100					92060800	ø 239 x 10 x 48.1	
				PRO	92060903	ø 262 x 21 x 44.6						
273500								Ake		2173801	[+] 21738 13	
1.6 VTEC Type R	08/97→09/00	136 / 185										
CIVIC VI Saloon (EJ, EK) 10/95→02/01												
273600			Ake		2169401	[+] 21694 17.3	01/98→			91039601	ø 200 x 36	
1.4 i (EJ9)	11/95→02/01	66 / 90	Ake		2169701	[+] 21697 15.8	→12/97			97028000		
			Ake		82060600					83039601	bore ø 19 ø 200 x 36	
					92077800	ø 240 x 21 x 44.7				94015300	ø 200,0 x 42.5	
273700			Ake		2169401	[+] 21694 17.3		Ake		2131201	[+] 21312 13	⊕ rear disc brake
1.5 i (EK3)	11/95→02/01	84 / 114										
1.6	10/95→09/00	118 / 160	Ake		82060600			Ake		82048500		⊕ rear disc brake
1.6	10/95→12/00	93 / 126		PRO	92060903	ø 262 x 21 x 44.6		Ake		82063000		
1.6 i Vtec	11/95→02/01	92 / 125								91039601	ø 200 x 36	⊕ rear drum brake
1.6 VTi (EK4)	11/95→02/01	118 / 160								97028000		
										83039601	bore ø 19 ø 200 x 36	⊕ rear drum brake
										92077900	ø 239 x 9 x 47.6	
										94015300	ø 200,0 x 42.5	⊕ rear drum brake
CIVIC VI Stufenheck (EJ, EK) 10/95→02/01 → CIVIC VI Saloon (EJ, EK), Page 451												
CIVIC VII Coupe (EM2) 02/01→12/05												
273800			Luc		2151503	[+] 21515 18		Ake		2365201	[+] 23652 14.8	⊕ rear disc brake
1.6 i	02/01→12/05	81 / 110	Ake		2169401	[+] 21694 17.3		Ake		82057700		⊕ rear disc brake
			Ake		82060600					91039601	ø 200 x 36	⊕ rear drum brake
			Luc		82061100					97037200		⊕ rear drum brake
				PRO	92060903	ø 262 x 21 x 44.6				92125300	ø 260 x 10 x 48.7	⊕ rear disc brake
273900			Luc		2151503	[+] 21515 18		Ake		2365201	[+] 23652 14.8	⊕ rear disc brake
1.7 i	05/01→12/05	88 / 120	Ake		2169401	[+] 21694 17.3		Ake		82057700		⊕ rear disc brake
1.7 i VTEC	05/01→12/05	92 / 125	Ake		82060600					91039601	ø 200 x 36	⊕ rear drum brake
			Luc		82061100					97037200		⊕ rear drum brake
				PRO	92060903	ø 262 x 21 x 44.6			PRO	92125403	ø 260 x 9 x 48.2	⊕ rear disc brake
CIVIC VII Hatchback (EU, EP, EV) 01/00→09/05												
274000			Luc		2151503	[+] 21515 18		Ake		2365201	[+] 23652 14.8	⊕ rear disc brake
1.4 i	02/01→09/05	55 / 75	Ake		2169401	[+] 21694 17.3		Ake		82057700		⊕ rear disc brake
			Ake		82060600					91039601	ø 200 x 36	⊕ rear drum brake
			Luc		82061100					92125100	ø 260 x 10 x 48.7	⊕ rear disc brake ⊕ sport pack.

F - H

		kW / hp											
CIVIC VII Hatchback (EU, EP, EV) 01/00→09/05													
1.4 i	02/01→09/05	274000 55 / 75		PRO	92060903	ø 262 x 21 x 44.6	⊖ sport pack.			92125300	ø 260 x 10 x 48.7	⊕ rear disc brake ⊖ sport pack.
				PRO	92175803	ø 262 x 21 x 47	⊕ sport pack.			94037100	ø 200 x 47.5	
1.4 iS (EP1)	02/01→09/05	274100 66 / 90	Luc		2151503	[+] 21515 18		Ake		2365201	[+] 23652 14.8	⊕ rear disc brake
			Ake		2169401	[+] 21694 17.3		Ake		82057700		⊕ rear disc brake
			Ake		82060600					91039601	ø 200 x 36	⊕ rear drum brake
			Luc		82061100					92125100	ø 260 x 10 x 48.7	⊕ rear disc brake ⊕ sport pack.
					92128400	ø 282 x 23 x 47.3	⊕ sport pack. BM ES7			92125300	ø 260 x 10 x 48.7	⊕ rear disc brake ⊖ sport pack.
				PRO	92060903	ø 262 x 21 x 44.6	⊖ sport pack.			94037000	ø 220 x 45.3	BM EU7
				PRO	92175803	ø 262 x 21 x 47	⊕ sport pack. BM EP2			94037100	ø 200 x 47.5	BM EP1
1.6 i	02/01→09/05	274200 81 / 110	Luc		2151503	[+] 21515 18		Ake		2171901	[+] 21719 14.6	01/05→
			Ake		2169401	[+] 21694 17.3		Ake		2365201	[+] 23652 14.8	→12/04
			Ake		82060600			Ake		82057700		→12/04
			Luc		82061100					92125100	ø 260 x 10 x 48.7	⊕ sport pack.
					92128400	ø 282 x 23 x 47.3	⊕ sport pack. BM ES7			92125300	ø 260 x 10 x 48.7	⊖ sport pack.
				PRO	92060903	ø 262 x 21 x 44.6	⊖ sport pack.			94037000	ø 220 x 45.3	BM EU7
				PRO	92175803	ø 262 x 21 x 47	⊕ sport pack. BM EP2			94037100	ø 200 x 47.5	BM EP1
1.7 (ES1)	01/00→08/05	274300 92 / 125	Ake		2169701	[+] 21697 15.8		Ake		2171901	[+] 21719 14.6	
				PRO	92175803	ø 262 x 21 x 47				92125100	ø 260 x 10 x 48.7	
1.7 CTDi	01/02→09/05	274400 74 / 100	Gir		2309601	[+] 23096 17.2		Ake		2171901	[+] 21719 14.6	
					92125200	ø 260 x 23 x 44.5				92125300	ø 260 x 10 x 48.7	
				PRO	92175803	ø 262 x 21 x 47						
2.0 i Sport	09/01→09/05	274500 118 / 160	Nis		2372901	[+] 23729 17		Ake		2365201	[+] 23652 14.8	
					92128400	ø 282 x 23 x 47.3		Ake		82057700		
										92125100	ø 260 x 10 x 48.7	
2.0 Type-R	09/01→09/05	274600 147 / 200	Sum		2317801	[+] 23178 16		Ake		2365201	[+] 23652 14.8	
					92125000	ø 300 x 25 x 47.2		Ake		82057700		
										92125100	ø 260 x 10 x 48.7	
CIVIC VII Saloon (ES) 12/00→09/05												
1.2	04/01→10/04	274700 58 / 79	Luc		2151503	[+] 21515 18		Ake		2365201	[+] 23652 14.8	⊕ rear disc brake
			Ake		2169401	[+] 21694 17.3		Ake		82057700		⊕ rear disc brake
			Ake		82060600					91039601	ø 200 x 36	⊕ rear drum brake
			Luc		82061100					97037200		⊕ rear drum brake
				PRO	92060903	ø 262 x 21 x 44.6				92125300	ø 260 x 10 x 48.7	⊕ rear disc brake
										94015300	ø 200,0 x 42.5	⊕ rear drum brake
1.3 IMA	01/04→09/05	274800 61 / 83	Luc		2151503	[+] 21515 18		Ake		2171901	[+] 21719 14.6	⊕ rear disc brake
			Ake		2169401	[+] 21694 17.3		Ake		2365201	[+] 23652 14.8	⊕ rear disc brake
			Ake		82060600			Ake		82057700		⊕ rear disc brake
			Luc		82061100					91039601	ø 200 x 36	⊕ rear drum brake
				PRO	92060903	ø 262 x 21 x 44.6				97037200		⊕ rear drum brake
									PRO	92125403	ø 260 x 9 x 48.2	⊕ rear disc brake

→

		kW / hp											
CIVIC VII Saloon (ES) 12/00→09/05													
		274800									94015300	ø 200,0 x 42.5	⊕ rear drum brake
1.3 IMA	01/04→09/05	61 / 83											
		274900	Luc		2151503	[+] 21515 18		Ake		2365201	[+] 23652 14.8	⊕ rear disc brake	
1.4 (ES4)	12/00→09/05	66 / 90											
1.6	02/01→09/05	81 / 110	Ake		2169401	[+] 21694 17.3		Ake		82057700		⊕ rear disc brake	
			Ake		82060600					91039601	ø 200 x 36	⊕ rear drum brake	
			Luc		82061100					97037200		⊕ rear drum brake	
				PRO	92060903	ø 262 x 21 x 44.6				92125300	ø 260 x 10 x 48.7	⊕ rear disc brake	
										94037100	ø 200 x 47.5	⊕ rear drum brake	
		275000	Ake		2169401	[+] 21694 17.3		Ake		2365201	[+] 23652 14.8	⊕ rear disc brake	
1.6	02/01→09/05	84 / 114		PRO	92060903	ø 262 x 21 x 44.6		Ake		82057700		⊕ rear disc brake	
										91039601	ø 200 x 36	⊕ rear drum brake	
										92164300	ø 260 x 9 x 42	⊕ rear disc brake	
									PRO	92164303	ø 260 x 9 x 42	⊕ rear disc brake	
										94037100	ø 200 x 47.5	⊕ rear drum brake	
		275100	Luc		2151503	[+] 21515 18		Ake		2365201	[+] 23652 14.8	⊕ rear disc brake	
1.7 (EU3)	02/01→09/05	85 / 116	Ake		2169401	[+] 21694 17.3		Ake		82049600		⊕ rear disc brake	
			Ake		82060600			Ake		82057700		⊕ rear disc brake	
			Luc		82061100					91039601	ø 200 x 36	⊕ rear drum brake	
				PRO	92060903	ø 262 x 21 x 44.6				97037200		⊕ rear drum brake	
										92125300	ø 260 x 10 x 48.7	⊕ rear disc brake	
										94037100	ø 200 x 47.5	⊕ rear drum brake	
		275200	Nis		2372901	[+] 23729 17		Ake		2365201	[+] 23652 14.8		
1.8	02/01→09/05	103 / 140		PRO	92144403	ø 282 x 23 x 47.2		Ake		82057700			
										92164300	ø 260 x 9 x 42		
									PRO	92164303	ø 260 x 9 x 42		
		275300	Ake		2169401	[+] 21694 17.3		Ake		2171901	[+] 21719 14.6	⊕ rear disc brake	
2.0	10/03→09/05	118 / 160		PRO	92060903	ø 262 x 21 x 44.6		Ake		82049600		⊕ rear disc brake	
										91039601	ø 200 x 36	⊕ rear drum brake	
										92125300	ø 260 x 10 x 48.7	⊕ rear disc brake	
										94037100	ø 200 x 47.5	⊕ rear drum brake	
CIVIC VII Stufenheck (ES) 12/00→09/05 → CIVIC VII Saloon (ES), Page 452													
CIVIC VIII Hatchback (FN, FK) 09/05→													
		275400	Luc		2408701	[+] 24087 17.5		Luc		2408601	[+] 24086 15.7		
1.4	01/06→	61 / 83											
1.4	10/08→	73 / 100											
1.6	09/05→	84 / 114	Luc		82506500			Luc		82506600			
1.8	01/06→	103 / 140											
2.2 CTDi	01/06→	103 / 140		PRO	92144403	ø 282 x 23 x 47.2				92164300	ø 260 x 9 x 42		
									PRO	92164303	ø 260 x 9 x 42		
		275500	Sum		2317801	[+] 23178 16		Luc		2408601	[+] 24086 15.7		
2.0	12/06→	110 / 150		PRO	92144403	ø 282 x 23 x 47.2		Luc		82506600			
										92164300	ø 260 x 9 x 42		
									PRO	92164303	ø 260 x 9 x 42		
		275600	Sum		2317801	[+] 23178 16		Luc		2408601	[+] 24086 15.7		
Type R	09/06→	148 / 201											

F - H

		kW / hp											
CIVIC VIII Hatchback (FN, FK) 09/05→													
		275600							Luc		82506600		
Type R	09/06→	148 / 201									92164300	ø 260 x 9 x 42	
										PRO	92164303	ø 260 x 9 x 42	
CIVIC VIII Saloon (FD, FA) 09/05→09/10													
		275700	Nis		2372901	[+] 23729 17			Ake		2171901	[+] 21719 14.6	
1.3	02/06→	85 / 116		PRO	92175803	ø 262 x 21 x 47			Ake		82049600		
1.5	03/11→	88 / 120									92164300	ø 260 x 9 x 42	
1.6	09/05→	92 / 125								PRO	92164303	ø 260 x 9 x 42	
1.7	09/05→	85 / 116											
1.8	01/06→	97 / 132											
1.8 Flex	11/06→	103 / 140											
2.0	02/06→02/12	114 / 155											
2.0	01/07→	148 / 201											
2.0	01/08→	141 / 192											
		275800	Ake		2497901	[+] 24979 16.5			Ake		2171901	[+] 21719 14.6	
1.3 Hybrid	01/06→	70 / 95		PRO	92175803	ø 262 x 21 x 47			Ake		82049600		
1.3 Hybrid	01/10→02/12	85 / 116									92164300	ø 260 x 9 x 42	
										PRO	92164303	ø 260 x 9 x 42	
		275900	Ake		2149701	[+] 21497 18	14" -brake		Ake		2171901	[+] 21719 14.6	⊕ rear disc brake
1.6	09/05→	84 / 114											
1.6	01/12→	92 / 125	Nis		2372901	[+] 23729 17	15" -brake		Ake		82049600		⊕ rear disc brake
					82061300		15" -brake				92164300	ø 260 x 9 x 42	⊕ rear disc brake
				PRO	92144403	ø 282 x 23 x 47.2	15" -brake			PRO	92164303	ø 260 x 9 x 42	⊕ rear disc brake
				PRO	92175803	ø 262 x 21 x 47	14" -brake						
		276000	Ake		2149701	[+] 21497 18	14" -brake		Ake		2171901	[+] 21719 14.6	
1.8	09/05→02/12	103 / 140											
1.8	02/06→	103 / 140	Nis		2372901	[+] 23729 17	15" -brake		Ake		82049600		
			Luc		2147903	[+] 21479 19.2	14" -brake				92164300	ø 260 x 9 x 42	
					82061300		15" -brake			PRO	92164303	ø 260 x 9 x 42	
				PRO	92144403	ø 282 x 23 x 47.2	15" -brake						
				PRO	92175803	ø 262 x 21 x 47	14" -brake						
		276100	Nis		2372901	[+] 23729 17			Ake		2172001	[+] 21720 14.6	
2.0 i-VTEC Type R	08/07→09/10	165 / 224		PRO	92175803	ø 262 x 21 x 47			Ake		82049600		
											92164300	ø 260 x 9 x 42	
										PRO	92164303	ø 260 x 9 x 42	
CIVIC VIII Stufenheck (FD, FA) 09/05→09/10 → CIVIC VIII Saloon (FD, FA), Page 454													
CIVIC IX (FK) 02/12→													
		276200	Ate		2479601	[+] 24796 17.5			Ate		2505401	[+] 25054 14.6	
1.4 i-VTEC	02/12→	73 / 99	Ate		82032000					PRO	92252603	ø 276 x 10 x 31.7	
				PRO	92252503	ø 280 x 25 x 47.1							
		276300	Ate		2479601	[+] 24796 17.5			Ate		2505401	[+] 25054 14.6	
1.8 i-VTEC	02/12→	104 / 141	Ate		82032000					PRO	92252603	ø 276 x 10 x 31.7	
				PRO	92252503	ø 280 x 25 x 47.1	⊕ man.						
				PRO	92257303	ø 293 x 25 x 47.3	⊕ autom.						
		276400	Ate		2479601	[+] 24796 17.5			Ate		2505401	[+] 25054 14.6	
2.2 i-DTEC	02/12→	110 / 150	Ate		82032000					PRO	92252603	ø 276 x 10 x 31.7	
				PRO	92257303	ø 293 x 25 x 47.3							
CIVIC IX Saloon (FB, FG) 02/12→													
		276500	Nis		2372901	[+] 23729 17			Ake		2171901	[+] 21719 14.6	
1.8	02/12→	104 / 141											

		kW / hp										
CIVIC IX Saloon (FB, FG) 02/12→												
		276500							Ake			
1.8	02/12→	104 / 141		82061300					Ake	82049600		
			PRO	92144403	ø 282 x 23 x 47.2					92164300	ø 260 x 9 x 42	
										92164303	ø 260 x 9 x 42	
CIVIC IX Stufenheck (FB, FG) 02/12→ → CIVIC IX Saloon (FB, FG), Page 454												
CIVIC IX Tourer (FK) 01/14→												
		276600	Ate	2479601	[+] 24796 17.5				Ate	2505401	[+] 25054 14.6	
1.6 i-DTEC	01/14→	88 / 120										
1.8 i-VTEC	01/14→	104 / 141	PRO	92257303	ø 293 x 25 x 47.3					92252603	ø 276 x 10 x 31.7	
CIVIC Mk IV Fastback (MA, MB) 09/94→02/01 → CIVIC VI Fastback (MA, MB), Page 449												
CIVIC Mk IV Hatchback (MA, MB) 09/94→02/01 → CIVIC VI Fastback (MA, MB), Page 449												
CIVIC Mk V Aerodeck (MB, MC) 04/98→02/01 → CIVIC VI Aerodeck (MB, MC), Page 449												
CIVIC Mk V Estate (MB, MC) 04/98→02/01 → CIVIC VI Aerodeck (MB, MC), Page 449												
CIVIC Mk V Hatchback (EJ, EK) 10/95→02/01 → CIVIC VI Hatchback (EJ, EK), Page 450												
CIVIC Mk V Saloon (EJ, EK) 10/95→02/01 → CIVIC VI Saloon (EJ, EK), Page 451												
CIVIC Mk V Stufenheck (EJ, EK) 10/95→02/01 → CIVIC VI Saloon (EJ, EK), Page 451												
CROSSROAD 02/07→08/10												
		276700	Nis	2372901	[+] 23729 17					2434101	[+] 24341 15.3	
1.8 i-VTEC	02/07→08/10	103 / 140										
CROSSTOUR 01/12→												
		276800	Ake	2434201	[+] 24342 17.8				Ake	2423101	[+] 24231 14.9	
2.4	09/12→	143 / 194										
3.5 4WD	01/12→	202 / 275	PRO	92184803	ø 293 x 28 x 47.1				Ake	82049600		
CR-V I (RD) 10/95→02/02												
		276900	Ake	2165101	[+] 21651 17.3					91042300	ø 220 x 36	
2.0	04/99→02/02	98 / 133										
2.0 16V (RD1, RD3)	10/95→01/99	94 / 128										
2.0 16V (RD1, RD3)	01/99→02/02	108 / 147	Ake	82058100						97013600		
				92101000	ø 282 x 23 x 47.1					94023000	ø 220,0 x 44.5	
CR-V II (RD_) 09/01→09/06												
		277000	Ake	2386801	[+] 23868 16.9				Ake	2365201	[+] 23652 14.8	→12/04
2.0	03/02→09/06	112 / 152										
2.0	07/02→09/06	110 / 150	Ake	82512400					Ake	2423101	[+] 24231 14.9	01/05→
2.4 Vtec (RD7)	09/01→09/06	118 / 160		92128400	ø 282 x 23 x 47.3	⊕ rim size 15"			Ake	82049600		
			PRO	92177903	ø 300 x 25 x 47	⊕ rim size 16"			Ake	82063000		01/05→
										92162500	ø 305 x 9 x 60.7	01/05→
										92165700	ø 282 x 9 x 59	→12/04
										92162503	ø 305 x 9 x 60.7	01/05→
										92165703	ø 282 x 9 x 59	→12/04
										91062800	ø 167.4 x 35	→12/04
										91072300	ø 198 x 35	01/05→
										97036000		
		277100	Ake	2386801	[+] 23868 16.9				Ake	2423101	[+] 24231 14.9	
2.2 CTDi	02/05→09/06	103 / 140	Ake	82512400					Ake	82049600		
				92128400	ø 282 x 23 x 47.3	⊕ rim size 15"			Ake	82063000		
			PRO	92177903	ø 300 x 25 x 47	⊕ rim size 16"				92162500	ø 305 x 9 x 60.7	
										92162503	ø 305 x 9 x 60.7	
										91072300	ø 198 x 35	
										97036000		
CR-V III (RE) 06/06→												
		277200	Bos	2463801	[+] 24638 19				Bos	2463501	[+] 24635 16.5	
2.0 Flex	01/07→	110 / 150										
2.0 i	01/07→	110 / 150										

30	kW / hp													
CR-V III (RE) 06/06→														
2.0 i 4WD	01/07→	110 / 150	Bos		82054200			Bos		82054300		
2.0 i-VTEC	11/09→	105 / 143		PRO	92184803	ø 293 x 28 x 47.1			PRO	92227203	ø 302 x 10 x 61	
2.2 i-CTDi 4WD	01/07→	103 / 140								91072200	ø 198 x 35	
2.2 i-DTEC 4WD	01/07→	110 / 150								97036700		
2.4	06/06→06/12	134 / 182										
2.4	09/06→06/12	124 / 168										
2.4	04/07→	125 / 170										
2.4 4WD	06/06→06/12	134 / 182										
2.4 4WD	09/06→	124 / 168										
2.4 i-VTEC	10/06→	118 / 161										
2.4 i-Vtec 4WD	04/07→	125 / 170										
2.4 i-VTEC 4WD	10/06→	118 / 160										
2.4 i-VTEC 4WD	09/09→	122 / 166										
CR-V IV (RE) 01/12→														
		277300	Bos		2463801	[+] 24638 19		Bos		2463501	[+] 24635 16.5	
1.6 i-DTEC	10/13→	88 / 120		PRO	92184803	ø 293 x 28 x 47.1						
2.0	01/12→	110 / 150										
2.0	10/12→	114 / 155										
2.0 AWD	10/12→	114 / 155										
		277400	Ake		2434201	[+] 24342 17.8		Bos		2463501	[+] 24635 16.5	
2.2 i-DTEC AWD	10/12→	110 / 150										
2.4	01/12→	138 / 188										
2.4 AWD	01/12→	132 / 180										
2.4 AWD	01/12→	140 / 190										
CR-V Mk II (RD_) 09/01→09/06 → CR-V II (RD_), Page 455														
CR-V Mk III (RE) 06/06→ → CR-V III (RE), Page 455														
CR-Z (ZF1) 06/10→														
		277500	Ake		2497901	[+] 24979 16.5			PRO	92224103	ø 260 x 9 x 31.1	
1.5 Hybrid	06/10→	84 / 114										
1.5 Hybrid	11/12→	89 / 121	Ake		82505100							
EDIX (BE) 08/04→ → FR-V (BE), Page 456														
ELEMENT 07/02→12/11														
		277600	Ake		2386801	[+] 23868 16.9		Ake		2171901	[+] 21719 14.6	
2.4 Vtec	07/02→12/11	118 / 160							PRO	92261703	ø 282 x 9 x 59	
2.4 Vtec 4x4	07/02→12/11	118 / 160								91062800	ø 167.4 x 35	
FIT II (GD) 03/02→10/08 → JAZZ II (GD), Page 457														
FIT III (GE) 10/07→ → JAZZ III (GE), Page 457														
FIT ARIA Stufenheck 05/03→ → JAZZ Saloon, Page 457														
FR-V (BE) 08/04→														
		277700	Sum		2405301	[+] 24053 16.9		Ake		2365201	[+] 23652 14.8	
1.7	08/04→	92 / 125										
1.7 Vtec 4x4	08/04→09/06	92 / 125			82061300			Ake		82049600		
1.8	01/07→	103 / 140										
2.0	08/04→09/06	114 / 155										
2.0	02/05→	110 / 150		PRO	92144403	ø 282 x 23 x 47.2				92144500	ø 282 x 12 x 58.3	
2.0 4x4	08/04→09/06	114 / 155										
2.2 i CTDi	07/05→	103 / 140								91062800	ø 167.4 x 35	
										97036000		
HR-V (GH) 03/99→														
		277800	Ake		2165101	[+] 21651 17.3				91039601	ø 200 x 36	→12/99
1.6 16V	03/99→	77 / 105										
1.6 16V 4WD	03/99→	77 / 105	Ake		82058100					91042300	ø 220 x 36	01/00→
1.6 16V 4WD	10/99→	91 / 124										
					92101000	ø 282 x 23 x 47.1				97013600		01/00→
										97037200		→12/99
										94023000	ø 220,0 x 44.5	01/00→
										94031700	ø 200 x 44.5	→12/99
INSIGHT (ZE_) 04/09→														
		277900	Ake		2497901	[+] 24979 16.5		Ake		2171901	[+] 21719 14.6	
1.3 Hybrid	04/09→	65 / 88										
1.3 Hybrid	04/09→	73 / 99	Ake		82505100			Ake		82049600		
				PRO	92060903	ø 262 x 21 x 44.6						
INSIGHT (ZE) 04/00→12/06														
		278000	Ake		2361601	[+] 23616 13.3				91077800	ø 180 x 26.5	→04/01
1.0 Hybrid	04/00→12/06	56 / 76										
1.0 Vtec	04/00→10/04	50 / 68	Ake		82060700							

→

		kW / hp										
INSIGHT (ZE) 04/00→12/06												
		278000										
1.0 Hybrid	04/00→12/06	56 / 76		92046500	ø 231 x 17 x 43.8							
1.0 Vtec	04/00→10/04	50 / 68										
INTEGRA (DC5) 02/02→04/07												
		278100	Ake	2165101	[+] 21651 17.3							
2.0	02/02→	118 / 160										
		278200	Ake	2169401	[+] 21694 17.3							
2.0	10/04→	147 / 200										
		278300	Ake	2165101	[+] 21651 17.3		Ake	2171901	[+] 21719 14.6			
2.0 16V Type-R	02/02→	162 / 220		92125000	ø 300 x 25 x 47.2			92125100	ø 260 x 10 x 48.7			
		278400	Ake	2169401	[+] 21694 17.3		Ate	2413701	[–] 24137 16.7			
2.0 Type-S	10/04→04/07	154 / 209					Ate epad	2413781	[–] 24137 16.7			
INTEGRA Coupe (DC2, DC4) 07/93→11/01												
		278500	Ake	2356601	[+] 23566 17.2		Ake	2131201	[+] 21312 13			
1.8	07/93→11/01	101 / 137										
		278600	Ake	2165101	[+] 21651 17.3	→10/00	Ake	2171901	[+] 21719 14.6			
1.8	07/93→11/01	107 / 146										
1.8 Type-R	11/97→10/01	140 / 190	Ake	2356601	[+] 23566 17.2	→01/98	Ake	82049600				
1.8 Type-R (DC2)	09/93→08/01	147 / 200										
			Ake	82057700								
			Ake	82506400		→01/98						
				92101000	ø 282 x 23 x 47.1							
		278700	Ake	2356601	[+] 23566 17.2		Ake	2365201	[+] 23652 14.8			
1.8 VTiR	07/93→11/99	125 / 170										
1.8 VTiR	07/93→11/99	127 / 173		92101000	ø 282 x 23 x 47.1							
JAZZ II (GD) 03/02→10/08												
		278800	Ake	2169701	[+] 21697 15.8		Ake	2173801	[+] 21738 13	⊕ ABS		
1.2	03/02→07/08	57 / 78										
1.3 iDSi	03/02→09/07	63 / 86	Ake	82060600			Ake	82048500		⊕ ABS		
1.4	03/02→07/08	61 / 83										
1.5	04/02→07/08	81 / 110		92110300	ø 240 x 21 x 39	→12/03		91060400	ø 180 x 32	⊖ ABS		
1.5 FF	03/02→09/07	79 / 107		92165900	ø 258 x 21 x 39.2	01/04→		97032400		⊖ ABS		
								92077900	ø 239 x 9 x 47.6	⊕ ABS		
								94028000	ø 180 x 39	⊖ ABS		
		278900	Ake	2169701	[+] 21697 15.8		Ake	2173801	[+] 21738 13	⊕ ABS		
1.4	04/05→07/08	65 / 88										
1.4 Flex	12/06→10/08	59 / 80	Ake	82060600			Ake	82048500		⊕ ABS		
1.7	10/03→09/07	92 / 125		92165900	ø 258 x 21 x 39.2			91060400	ø 180 x 32	⊖ ABS		
								97032400		⊖ ABS		
								92077900	ø 239 x 9 x 47.6	⊕ ABS		
								94028000	ø 180 x 39	⊖ ABS		
JAZZ III (GE) 10/07→												
		279000	Ake	2497901	[+] 24979 16.5		Ake	2173801	[+] 21738 13			
1.2	07/08→	66 / 90										
1.3 HYBRID	04/11→	65 / 88	Ake	82505100		→MY 2012	Ake	82028400				
1.4	11/08→	74 / 101										
1.4 Flex	11/08→	74 / 101		92060903	ø 262 x 21 x 44.6			92204000	ø 239 x 9 x 33.3			
1.4 i	07/08→	73 / 100										
1.5 Flex	10/07→	85 / 116										
1.5 Flexfuel	07/08→	88 / 120										
		279100	Ake	2497901	[+] 24979 16.5		Ake	2173801	[+] 21738 13	⊕ rear disc brake		
1.5	09/08→	87 / 118										
1.5 i	07/08→	88 / 120	Ake	82505100		→MY 2012	Ake	82028400		⊕ rear disc brake		
				92060903	ø 262 x 21 x 44.6			91060400	ø 180 x 32	⊕ rear drum brake		
								92204000	ø 239 x 9 x 33.3	⊕ rear disc brake		
								94028000	ø 180 x 39	⊕ rear drum brake		
JAZZ Saloon 05/03→												
		279200	Ake	2169701	[+] 21697 15.8		Ake	2173801	[+] 21738 13	⊕ ABS		
1.3	05/03→	63 / 86										
1.5	05/03→	66 / 90										

kW / hp										
JAZZ Saloon 05/03→										
279200										
1.3 05/03→ 63 / 86		Ake	82060600			Ake	82048500			⊕ ABS
1.5 05/03→ 66 / 90			92110300	ø 240 x 21 x 39	→12/03		91060400	ø 180 x 32		⊖ ABS
			92165900	ø 258 x 21 x 39.2	01/04→		97032400			⊖ ABS
							92077900	ø 239 x 9 x 47.6		⊕ ABS
							94028000	ø 180 x 39		⊖ ABS
279300										
1.5 10/04→ 81 / 110		Ake	2169701	[+] 21697 15.8		Ake	2173801	[+] 21738 13		⊕ ABS
		Ake	82060600			Ake	82048500			⊕ ABS
			92165900	ø 258 x 21 x 39.2			91060400	ø 180 x 32		⊖ ABS
							97032400			⊖ ABS
							92077900	ø 239 x 9 x 47.6		⊕ ABS
							94028000	ø 180 x 39		⊖ ABS
JAZZ Stufenheck 05/03→ → JAZZ Saloon, Page 457										
LEGEND III (KA9) 02/96→										
279400										
3.5 10/04→ 221 / 300		Ake	2165101	[+] 21651 17.3		Ake	2171901	[+] 21719 14.6		
			92110200	ø 300 x 28 x 47.2		Ake	82049600			
						Ake	82063000			
							92078400	ø 282 x 9 x 61.1		
							91062800	ø 167.4 x 35		
							97036000			
279500										
3.5 i 24V 02/96→ 151 / 205		Ake	2165101	[+] 21651 17.3		Ake	2171901	[+] 21719 14.6		
3.5 i 24V 11/97→09/04 153 / 208		Ake	82058100		→12/98	Ake	82049600			
			92101000	ø 282 x 23 x 47.1	→12/98	Ake	82063000			
			92110200	ø 300 x 28 x 47.2	01/99→		92078400	ø 282 x 9 x 61.1		
							91062800	ø 167.4 x 35		
							97036000			
LEGEND III Saloon (KA9) 02/96→ → LEGEND III (KA9), Page 458										
LEGEND III Stufenheck (KA9) 02/96→ → LEGEND III (KA9), Page 458										
LEGEND IV (KB_) 05/06→										
279600										
3.5 V6 4WD 05/06→ 217 / 295		Ake	2511701	[+] 25117 16			2516601	[+] 25166 15.9		
			92110200	ø 300 x 28 x 47.2		Ake	82049600			
						Ake	82063000			
							92078400	ø 282 x 9 x 61.1		
279700										
3.7 VTEC V6 4WD 07/08→ 217 / 295		Ake	2511701	[+] 25117 16		Ake	2171901	[+] 21719 14.6	01/09→	
3.7 VTEC V6 4WD 08/08→ 226 / 307							2516601	[+] 25166 15.9	→12/08	
			92110200	ø 300 x 28 x 47.2		Ake	82049600			
						Ake	82063000			
							92078400	ø 282 x 9 x 61.1		
							91062800	ø 167.4 x 35		
							97036000			
LEGEND Mk III (KA9) 02/96→ → LEGEND III (KA9), Page 458										
LOGO (GA3) 03/99→03/02										
279800										
1.3 03/99→03/02 48 / 65		Ake	2169701	[+] 21697 15.8			91039601	ø 200 x 36		

		kW / hp									
LOGO (GA3) 03/99→03/02											
		279800	Ake		82060600				97037200		
1.3	03/99→03/02	48 / 65			92110300	ø 240 x 21 x 39			94015300	ø 200,0 x 42.5	
MDX (YD) 04/03→04/07											
		279900	Nis		2342001	[+] 23420 16.5					
3.5 (YD1)	04/03→04/07	191 / 260									
MOBILIO (Spike) 12/01→12/06											
		280000	Ake		2169401	[+] 21694 17.3					
1.5	12/01→12/06	65 / 89									
1.5 4WD	12/01→12/06	65 / 89									
MOBILIO 12/01→10/08											
		280100	Ake		2169401	[+] 21694 17.3					
1.5	12/01→10/08	66 / 90									
1.5	12/01→10/08	81 / 110									
1.5 4WD	12/01→10/08	66 / 90									
1.5 4WD	12/01→10/08	81 / 110									
NSX Cabriolet (NA) 03/95→09/05 → NSX Convertible (NA), Page 459											
NSX Convertible (NA) 03/95→09/05											
		280200	Ake		2165101	[+] 21651 17.3		Ake	2335501	[+] 23355 15	
3.0 24V Vtec	03/95→09/05	201 / 274									
3.0 24V Vtec Automatic	03/95→09/05	188 / 256			92138700	ø 282 x 28 x 47					
3.2 24V Vtec	01/97→09/05	206 / 280									
NSX Coupe (NA) 06/90→09/05											
		280300	Ake		2165101	[+] 21651 17.3		Ake	2335501	[+] 23355 15	
3.0 24V Vtec (NA1)	06/90→09/05	201 / 274									
3.0 24V Vtec Automatik (NA1)	06/90→09/05	188 / 256			92138700	ø 282 x 28 x 47					
3.2 24V Vtec (NA2)	01/97→09/05	206 / 280									
ODYSSEY (RA_) 10/97→12/99											
		280400			2480501	[+] 24805 18	01/99→				
2.3 4x4	10/97→12/99	110 / 150			82510500		01/99→				
ODYSSEY (RA) 10/97→06/04 → SHUTTLE (RA), Page 460											
ODYSSEY (RB_) 07/02→08/04											
		280500	Ake		2165101	[+] 21651 17.3		Ake	2171901	[+] 21719 14.6	
2.3	07/02→09/03	110 / 150									
2.3 4x4	07/02→09/03	110 / 150									
		280600	Nis		2372901	[+] 23729 17					
2.4	10/03→	118 / 160									
2.4	10/05→	140 / 190									
		280700			2480501	[+] 24805 18			2434101	[+] 24341 15.3	→10/03
3.5	07/02→08/04	171 / 233			82510500						
		280800			2480501	[+] 24805 18					
3.5	09/04→09/05	188 / 256									
3.5	09/05→	182 / 247			82510500						
ORTHIA 01/96→12/02											
		280900	Ake		2356601	[+] 23566 17.2					
1.8 EL1	01/96→01/02	123 / 167									
2.0 EL2	01/96→12/02	105 / 143									
2.0 EL3	01/96→12/02	105 / 143									
PILOT 10/05→07/08											
		281000	Ake		2386801	[+] 23868 16.9			2480501	[+] 24805 18	
3.5 4WD	10/05→07/08	195 / 265							82510500		
PILOT 09/08→											
		281100	Ake		2560801	[+] 25608 16.9		Ake	2543401	[+] 25434 15.2	
3.5 4WD	09/08→	186 / 253									
PRELUDE V (BB) 10/96→07/02											
		281200	Ake		2187901	[+] 21879 18.5		Ake	2171901	[+] 21719 14.6	
2.0 16V (BB9)	10/96→10/00	98 / 133	Ake		82058100		⊕ autom.	Ake	82049600		
			Ake		82060700		⊕ man.	Ake	82063000		
					92078200	ø 260 x 23 x 47.1					
					92101000	ø 282 x 23 x 47.1					
		281300	Ake		2165101	[+] 21651 17.3		Ake	2171901	[+] 21719 14.6	
2.2 16V	10/96→10/00	147 / 200									
2.2 16V (BB6, BB8)	10/96→10/00	136 / 185	Ake		82058100			Ake	82049600		

HONDA

HONDA

		kW / hp											
PRELUDE V (BB) 10/96→07/02													
		281300							Ake				
2.2 16V	10/96→10/00	147 / 200			92101000	ø 282 x 23 x 47.1					82063000		
2.2 16V (BB6, BB8)	10/96→10/00	136 / 185								PRO	92172003	ø 259.5 x 9 x 42.5	
		281400	Luc		2499601	[+] 24996 17.4							
2.2 Si (BB5)	03/97→07/02	118 / 160											
PRELUDE Mk V (BB) 10/96→07/02 → PRELUDE V (BB), Page 459													
RIDGELINE 03/05→													
		281500			2529701	[+] 25297 17.8					2524301	[+] 25243 15.2	
3.5 4x4	03/05→	188 / 256											
3.5 4x4	10/05→	182 / 247											
S2000 (AP) 03/99→													
		281600	Sum		2317801	[+] 23178 16			Ake		2365201	[+] 23652 14.8	
2.0	06/99→	177 / 240											
2.0 Vtec	03/99→10/03	170 / 231		PRO	92177803	ø 300 x 25 x 39.7			Ake		82049600		
2.0 Vtec	10/03→	184 / 250											
2.2 Vtec	10/03→	176 / 239								PRO	92173403	ø 282 x 12 x 39.7	
SHUTTLE (RA) 10/97→06/04													
		281700	Ake		2165101	[+] 21651 17.3			Ake		2365201	[+] 23652 14.8	
2.3 16V	10/97→06/04	110 / 150	Ake		82058100				Ake		82063000		
					92101000	ø 282 x 23 x 47.1					92078400	ø 282 x 9 x 61.1	
											91062800	ø 167.4 x 35	
		281800	Nis		2372901	[+] 23729 17			Ake		2365201	[+] 23652 14.8	
3.0	10/97→06/04	154 / 209			92101000	ø 282 x 23 x 47.1							
SMX 10/99→09/02													
		281900	Ake		2165101	[+] 21651 17.3					91042300	ø 220 x 36	
2.0 Lowdown	10/99→09/02	103 / 140											
STEPWAGON 10/00→09/05													
		282000	Ake		2165101	[+] 21651 17.3			Ake		2171901	[+] 21719 14.6	
2.0	10/00→09/05	118 / 160											
2.0 4WD	10/00→09/05	118 / 160											
2.4	10/00→09/05	119 / 162											
STEPWAGON 10/05→													
		282100	Nis		2372901	[+] 23729 17							
2.0	10/05→	114 / 155											
2.4 Z FF	10/05→	119 / 162											
STREAM (RN) 05/01→													
		282200	Nis		2372901	[+] 23729 17			Ake		2365201	[+] 23652 14.8	
1.7 16V	05/01→	92 / 125											
2.0 16V	05/01→	115 / 156			82061300						92144500	ø 282 x 12 x 58.3	
					92128400	ø 282 x 23 x 47.3					91062800	ø 167.4 x 35	
											97036000		
STREAM 10/05→													
		282300	Nis		2372901	[+] 23729 17			Ake		2171901	[+] 21719 14.6	
1.8 Vtec	10/05→	103 / 140											
2.0 Vtec	10/05→	110 / 150			82061300								
					92128400	ø 282 x 23 x 47.3							

HONDA (GAC)

HONDA (GAC)

		kW / hp											
ODYSSEY Großraumlimousine 04/02→08/09 → ODYSSEY MPV, Page 460													
ODYSSEY Großraumlimousine 08/09→ → ODYSSEY MPV, Page 460													
ODYSSEY MPV 04/02→08/09													
		282400	Sum		2405301	[+] 24053 16.9			Ake		2365201	[+] 23652 14.8	
2.3	04/02→12/04	110 / 148											
		282500	Nis		2372901	[+] 23729 17							
2.4	03/05→08/09	118 / 158											
ODYSSEY MPV 08/09→													
		282600	Nis		2372901	[+] 23729 17							
2.4	08/09→	133 / 181											

		kW / hp											
AVALANCHE Estate (VY) 10/03→04/06													
		282700		**2481501**	[–]	24815	14.5		Luc		**2481801**	[–] 24818	18.5
5.7 4x4	10/03→04/06	260 / 354											
AVALANCHE Kombi (VY) 10/03→04/06 → AVALANCHE Estate (VY), Page 461													
AVALANCHE Pickup (VY) 05/04→04/06													
		282800		**2481501**	[–]	24815	14.5		Luc		**2481801**	[–] 24818	18.5
5.7 4x4	05/04→04/06	260 / 354											
AVALANCHE Pick-up (VY) 05/04→04/06 → AVALANCHE Pickup (VY), Page 461													
CLUBSPORT Saloon (VT) 01/97→10/00													
		282900		**2481501**	[–]	24815	14.5		Luc		**2481801**	[–] 24818	18.5
5.0 i V8	01/97→06/99	195 / 265											
5.7 i V8	07/99→10/00	250 / 340											
CLUBSPORT Saloon (VX) 09/00→09/02													
		283000		**2481501**	[–]	24815	14.5		Luc		**2481801**	[–] 24818	18.5
5.7 i V8	09/00→09/02	255 / 347											
CLUBSPORT Saloon (VY) 10/02→09/04													
		283100		**2481501**	[–]	24815	14.5		Luc		**2481801**	[–] 24818	18.5
5.7 i V8	10/02→08/03	260 / 354											
5.7 i V8	09/03→09/04	285 / 388											
CLUBSPORT Saloon (VZ) 10/04→12/06													
		283200		**2481501**	[–]	24815	14.5		Luc		**2481801**	[–] 24818	18.5
6.0 i V8	10/04→12/06	297 / 404											
CLUBSPORT Stufenheck (VT) 01/97→10/00 → CLUBSPORT Saloon (VT), Page 461													
CLUBSPORT Stufenheck (VX) 09/00→09/02 → CLUBSPORT Saloon (VX), Page 461													
CLUBSPORT Stufenheck (VY) 10/02→09/04 → CLUBSPORT Saloon (VY), Page 461													
CLUBSPORT Stufenheck (VZ) 10/04→12/06 → CLUBSPORT Saloon (VZ), Page 461													
COUPE 4 (VZ) 07/04→04/06													
		283300		**2481501**	[–]	24815	14.5		Luc		**2481801**	[–] 24818	18.5
5.7 i V8	07/04→04/06	270 / 367											
GRANGE Saloon (WH) 07/99→09/03													
		283400		**2481501**	[–]	24815	14.5		Luc		**2481801**	[–] 24818	18.5
3.8 i V6 Supercharged	07/99→09/00	180 / 245											
5.7 i V8	07/99→11/00	250 / 340											
5.7 i V8	10/00→09/03	255 / 347											
GRANGE Saloon (WK) 10/03→09/04													
		283500		**2481501**	[–]	24815	14.5		Luc		**2481801**	[–] 24818	18.5
5.7 i V8	10/03→09/04	285 / 388											
GRANGE Saloon (WL) 09/04→12/06													
		283600		**2481501**	[–]	24815	14.5		Luc		**2481801**	[–] 24818	18.5
6.0 i V8	09/04→12/06	297 / 404											
GRANGE Stufenheck (WH) 07/99→09/03 → GRANGE Saloon (WH), Page 461													
GRANGE Stufenheck (WK) 10/03→09/04 → GRANGE Saloon (WK), Page 461													
GRANGE Stufenheck (WL) 09/04→12/06 → GRANGE Saloon (WL), Page 461													
GTO Coupe (V2) 03/01→08/03													
		283700		**2481501**	[–]	24815	14.5		Luc		**2481801**	[–] 24818	18.5
5.7 i V8	03/01→08/03	255 / 347											
GTO Coupe (VX, VZ) 09/03→11/07													
		283800		**2481501**	[–]	24815	14.5		Luc		**2481801**	[–] 24818	18.5
5.7 i V8	09/03→09/04	285 / 388											
6.0 i V8	10/04→11/07	297 / 404											
GTS (VX) 09/00→08/01													
		283900		**2481501**	[–]	24815	14.5		Luc		**2481801**	[–] 24818	18.5
5.7 i V8	09/00→08/01	300 / 408											
GTS (VY) 10/02→09/04													
		284000		**2481501**	[–]	24815	14.5		Luc		**2481801**	[–] 24818	18.5
5.7 i V8	10/02→09/04	300 / 408											
GTS Coupe (V2) 03/01→09/04													
		284100		**2481501**	[–]	24815	14.5		Luc		**2481801**	[–] 24818	18.5
5.7 i V8	03/01→09/04	300 / 408											
MALOO (VU) 03/01→09/02													
		284200		**2481501**	[–]	24815	14.5		Luc		**2481801**	[–] 24818	18.5
5.7 i V8	03/01→09/02	255 / 347											
MALOO (VY) 10/02→09/04													
		284300		**2481501**	[–]	24815	14.5		Luc		**2481801**	[–] 24818	18.5
5.7 i V8	10/02→09/03	260 / 354											
5.7 i V8	10/03→09/04	285 / 388											
MALOO (VZ) 10/04→09/07													
		284400		**2481501**	[–]	24815	14.5		Luc		**2481801**	[–] 24818	18.5
6.0 i V8	10/04→09/07	297 / 404											
SENATOR Saloon (VT) 09/97→06/99													
		284500		**2481501**	[–]	24815	14.5		Luc		**2481801**	[–] 24818	18.5
5.0 i V8	09/97→06/99	195 / 265											

F - H

HSV

HSV

		kW / hp												
SENATOR Saloon (VT) 09/97→06/99														
5.7	09/97→06/99	220 / 299			**2481501**	[–] 24815 14.5			Luc		**2481801**	[–] 24818 18.5		
5.7 i V8	09/97→06/99	230 / 313												
5.7 i V8	09/97→06/99	250 / 340												
SENATOR Saloon (VX) 09/00→09/02														
		284600			**2481501**	[–] 24815 14.5			Luc		**2481801**	[–] 24818 18.5		
5.7 i V8	09/00→09/02	255 / 347												
SENATOR Saloon (VY) 10/02→09/04														
		284700			**2481501**	[–] 24815 14.5			Luc		**2481801**	[–] 24818 18.5		
5.7 i V8	10/02→08/03	260 / 354												
5.7 i V8	09/03→09/04	285 / 388												
SENATOR Saloon (VZ) 10/04→07/06														
		284800			**2481501**	[–] 24815 14.5			Luc		**2481801**	[–] 24818 18.5		
6.0 i V8	10/04→07/06	297 / 404												
SENATOR Stufenheck (VT) 09/97→06/99 → SENATOR Saloon (VT), Page 461														
SENATOR Stufenheck (VX) 09/00→09/02 → SENATOR Saloon (VX), Page 462														
SENATOR Stufenheck (VY) 10/02→09/04 → SENATOR Saloon (VY), Page 462														
SENATOR Stufenheck (VZ) 10/04→07/06 → SENATOR Saloon (VZ), Page 462														
SV6000 Saloon 08/05→04/06														
		284900			**2481501**	[–] 24815 14.5			Luc		**2481801**	[–] 24818 18.5		
6.0 i V8	08/05→04/06	297 / 404												
SV6000 Stufenheck 08/05→04/06 → SV6000 Saloon, Page 462														
VXR Hatchback (AH) 09/06→														
		285000	Ate		**2373807**	[o] 23738 20.6			Luc		**2341702**	[–] 23417 15.2		
2.0 i Turbo	09/06→	177 / 241			**98031400**	L287			Luc	epad	**2341781**	[–] 23417 15.2		
			Ate		**82062900**				Luc		**82060100**			
				PRO	**92149803**	ø 321 x 28 x 44			Luc		**82063300**			
											92167600	ø 278 x 10 x 42		
										PRO	**92167603**	ø 278 x 10 x 42		
VXR Schrägheck (AH) 09/06→ → VXR Hatchback (AH), Page 462														
XU6 Saloon (VT) 03/98→10/00														
		285100			**2481501**	[–] 24815 14.5			Luc		**2481801**	[–] 24818 18.5		
3.8 i V6 Supercharged	03/98→10/00	180 / 245												
XU6 Saloon (VX) 09/00→10/02														
		285200			**2481501**	[–] 24815 14.5			Luc		**2481801**	[–] 24818 18.5		
3.8 i V6 Supercharged	09/00→10/02	180 / 245												
XU6 Stufenheck (VT) 03/98→10/00 → XU6 Saloon (VT), Page 462														
XU6 Stufenheck (VX) 09/00→10/02 → XU6 Saloon (VX), Page 462														
XU8 Saloon (VT) 01/99→06/99														
		285300			**2481501**	[–] 24815 14.5			Luc		**2481801**	[–] 24818 18.5		
5.0 i V8	01/99→06/99	195 / 265												
XU8 Stufenheck (VT) 01/99→06/99 → XU8 Saloon (VT), Page 462														

HUMMER

HUMMER

		kW / hp												
HUMMER H1 01/92→														
		285400	Kel		**2182001**	[–] 21820 15.5	10/92→ →09/96							
6.5 D	01/92→	125 / 170												
6.5 Turbo D	01/92→	143 / 195												

HYUNDAI

HYUNDAI

		kW / hp												
ACCENT I (X-3) 10/94→01/00														
		285500	Ake		**2101202**	[+] 21012 14.8					**91054100**	ø 180 x 31.7		
1.3	10/94→01/00	44 / 60												
1.3	10/94→01/00	55 / 75			**82501500**						**97011100**			
1.3 i 12V	10/94→01/00	62 / 84												
1.5 i 12V	10/94→01/00	65 / 88												
					92062600	ø 242 x 19 x 40.5					**94037700**	ø 180 x 44.7	→05/96	
											94030300	ø 180 x 44.6	06/96→	
		285600	Ake		**2101202**	[+] 21012 14.8					**91054100**	ø 180 x 31.7		
1.5 i 16V	12/95→01/00	73 / 99												

→

		kW / hp											
ACCENT I (X-3) 10/94→01/00													
		285600			82501500					97011100			
1.5 i 16V	12/95→01/00	73 / 99			92062600	ø 242 x 19 x 40.5				94030300	ø 180 x 44.6		
ACCENT II (LC) 09/99→11/05													
		285700	Ake		2101202	[+] 21012 14.8				91059600	ø 180 x 35	→08/02	
1.3	01/00→11/05	55 / 75			82501500					97016500			
1.3	01/00→11/05	61 / 83			92128500	ø 241 x 19 x 52				84059600	bore ø 19 ø 180 x 35	→08/02	
1.3	01/00→11/05	63 / 86											
1.3	08/02→11/05	62 / 84											
1.5	01/00→11/05	66 / 90											
1.5	09/00→11/05	75 / 102											
1.5 CRDi	04/02→11/05	60 / 82											
		285800	Ake		2101202	[+] 21012 14.8				91059600	ø 180 x 35	→08/02	
1.5	09/99→10/02	65 / 88			82501500					97016500			
1.5	09/99→10/02	68 / 92			92128500	ø 241 x 19 x 52				84059600	bore ø 19 ø 180 x 35	→08/02	
1.5	09/99→10/02	77 / 105								94030300	ø 180 x 44.6	→01/00	
		285900	Ake		2101202	[+] 21012 14.8				91059600	ø 180 x 35		
1.6	12/02→11/05	77 / 105			82501500					97016500			
					92128500	ø 241 x 19 x 52				84059600	bore ø 19 ø 180 x 35		
ACCENT III (MC) 11/05→11/10													
		286000	Man		2431701	[+] 24317 17.5			Man	2432001	[+] 24320 15.9	⊕ ABS	
1.4 GL	11/05→11/10	71 / 97											
1.5 CRDi GLS	11/05→11/10	81 / 110	Man		82508500					91068900	ø 203 x 31.5	⊖ ABS	
1.6 GLS	11/05→11/10	82 / 112			92164700	ø 256 x 22 x 46.5				97038800		⊖ ABS	
				PRO	92164703	ø 256 x 22 x 46.5				92161300	ø 262 x 10 x 63.8	⊕ ABS	
									PRO	92161303	ø 262 x 10 x 63.8	⊕ ABS	
										94035900	ø 203,2 x 40.5	⊖ ABS	
										91072500	ø 168 x 32	⊕ ABS	
ACCENT IV (RB) 11/10→													
		286100			2534801	[+] 25348 17.8			Ake	2533701	[+] 25337 15.7	⊕ ABS	
1.4	11/10→	79 / 107		PRO	92237903	ø 256 x 22 x 43.8				91072600	ø 203 x 32	⊖ ABS	
1.6	11/10→	90 / 122							PRO	92242203	ø 262 x 10 x 43.9	⊕ ABS	
1.6 CRDi	07/11→	94 / 128											
ACCENT IV Saloon (RB) 11/10→													
		286200	Man		2431701	[+] 24317 17.5	→2012-02		Man	2432001	[+] 24320 15.9	⊕ rear disc brake →2012-02	
1.4	11/10→	74 / 101			92164700	ø 256 x 22 x 46.5	→2012-02		Man	82074000		⊕ rear disc brake →2012-02	
				PRO	92164703	ø 256 x 22 x 46.5	→2012-02			91068900	ø 203 x 31.5	⊕ rear drum brake →2012-02	
					TPM0008		→2012-02			92161300	ø 262 x 10 x 63.8	⊕ rear disc brake →2012-02	
									PRO	92161303	ø 262 x 10 x 63.8	⊕ rear disc brake →2012-02	
										TPM0008		→2012-02	
										94035900	ø 203,2 x 40.5	⊕ rear drum brake →2012-02	
		286300			2534801	[+] 25348 17.8			Ake	2533701	[+] 25337 15.7	⊕ ABS	
1.4	11/10→	79 / 107		PRO	92237903	ø 256 x 22 x 43.8				91072600	ø 203 x 32	⊖ ABS	
1.4 CRDi	11/10→	66 / 90							PRO	92242203	ø 262 x 10 x 43.9	⊕ ABS	
1.6	11/10→	90 / 122											
1.6	11/10→	91 / 123											
1.6 CRDi	10/11→	94 / 128											
ACCENT IV Stufenheck (RB) 11/10→ → ACCENT IV Saloon (RB), Page 463													
ACCENT Saloon (LC) 09/99→11/05													
		286400	Ake		2101202	[+] 21012 14.8				91059600	ø 180 x 35	→08/02	
1.3	01/00→11/05	55 / 75			82501500					97016500			
1.3	01/00→11/05	63 / 86			92128500	ø 241 x 19 x 52				84059600	bore ø 19 ø 180 x 35	→08/02	
1.5	01/00→	69 / 94											
1.5	01/00→11/05	66 / 90											
1.5 CRDi	01/02→11/05	60 / 82											
1.5 LPG	01/00→	69 / 94											

30 kW / hp												
ACCENT Saloon (LC) 09/99→11/05												
286500												
1.5	09/99→10/02	73 / 99	Ake	2101202	[+] 21012 14.8			91059600	ø 180 x 35	→08/02
1.5	09/99→10/02	75 / 102		82501500				97016500		
				92128500	ø 241 x 19 x 52			84059600	bore ø 19 ø 180 x 35	→08/02
								94030300	ø 180 x 44.6	→01/00
286600										
1.6	12/02→11/05	77 / 105	Ake	2101202	[+] 21012 14.8			91059600	ø 180 x 35	
				82501500				97016500		
				92128500	ø 241 x 19 x 52			84059600	bore ø 19 ø 180 x 35	
ACCENT Saloon (MC) 11/05→11/10										
286700										
1.4 GL	11/05→11/10	71 / 97	Man	2431701	[+] 24317 17.5		Man	2432001	[+] 24320 15.9	⊕ ABS
1.5	01/08→11/10	70 / 95	Man	82508500				91068900	ø 203 x 31.5	⊖ ABS
1.5 CRDi GLS	11/05→11/10	81 / 110		92164700	ø 256 x 22 x 46.5			97038800		⊖ ABS
1.5 LPG	01/08→11/10	70 / 95		PRO 92164703	ø 256 x 22 x 46.5			92161300	ø 262 x 10 x 63.8	⊕ ABS
1.6 GLS	11/05→11/10	82 / 112						PRO 92161303	ø 262 x 10 x 63.8	⊕ ABS
								94035900	ø 203,2 x 40.5	⊖ ABS
								91072500	ø 168 x 32	⊕ ABS
ACCENT Saloon (X-3) 09/94→01/00										
286800										
1.3	10/94→01/00	44 / 60	Ake	2101202	[+] 21012 14.8			91054100	ø 180 x 31.7	
1.3	10/94→01/00	55 / 75		82501500				97011100		
1.3 i 12V	10/94→01/00	62 / 84		92062600	ø 242 x 19 x 40.5			94037700	ø 180 x 44.7	→05/96
1.5	09/94→12/99	69 / 94						94030300	ø 180 x 44.6	06/96→
1.5	10/94→07/99	63 / 85								
1.5 i 12V	10/94→01/00	65 / 88								
286900										
1.5 i 16V	10/95→01/00	73 / 99	Ake	2101202	[+] 21012 14.8			91054100	ø 180 x 31.7	
				82501500				97011100		
				92062600	ø 242 x 19 x 40.5			94030300	ø 180 x 44.6	
ACCENT Stufenheck (LC) 09/99→11/05 → ACCENT Saloon (LC), Page 463										
ACCENT Stufenheck (MC) 11/05→11/10 → ACCENT Saloon (MC), Page 464										
ACCENT Stufenheck (X-3) 09/94→01/00 → ACCENT Saloon (X-3), Page 464										
AMICA / ATOZ (MX) 02/98→08/08 → ATOS (MX), Page 464										
AMICA (MX) 08/99→ → ATOS PRIME (MX), Page 465										
ATOS (MX) 02/98→08/08										
287000										
0.8	04/99→07/03	38 / 52	Man	2323802	[+] 23238 16	→07/01		91056800	ø 180 x 32	
			Man	2427701	[+] 24277 16.5	08/01→		97037800		
			Man	82511100		vented disc	Man	84056800	bore ø 17.5 ø 180 x 32	
			Man	82512700		solid disc		94030200	ø 180 x 36	
				92102800	ø 230 x 11 x 43.7					
				92146800	ø 234 x 18 x 50.8					
287100										
1.0	09/05→08/08	46 / 63	Man	2427701	[+] 24277 16.5			91056800	ø 180 x 32	
			Man	82511100		vented disc		97037800		
			Man	82512700		solid disc		94030200	ø 180 x 36	
				92102800	ø 230 x 11 x 43.7					
				92146800	ø 234 x 18 x 50.8					
287200										
1.0 i	02/98→03/02	40 / 54	Man	2323802	[+] 23238 16	→07/01		91056800	ø 180 x 32	
1.0 i	02/98→03/02	41 / 56	Man	2427701	[+] 24277 16.5	08/01→		97037800		

→

		kW / hp										
ATOS (MX) 02/98→08/08												
		287200	Man		**82511100**		vented disc	Man		**84056800**	bore ø 17.5 ø 180 x 32	
1.0 i	02/98→03/02	40 / 54										
1.0 i	02/98→03/02	41 / 56	Man		**82512700**		solid disc			**94037600**	ø 180 x 38.7	02/01→
					92102800	ø 230 x 11 x 43.7				**94030200**	ø 180 x 36	→01/01
					92146800	ø 234 x 18 x 50.8						
		287300	Man		**2323802**	[+] 23238 16	→07/01			**91056800**	ø 180 x 32	
1.0 i	03/01→	43 / 58	Man		**2427701**	[+] 24277 16.5	08/01→			**97037800**		
			Man		**82511100**		vented disc	Man		**84056800**	bore ø 17.5 ø 180 x 32	
			Man		**82512700**		solid disc			**94037600**	ø 180 x 38.7	
					92102800	ø 230 x 11 x 43.7						
					92146800	ø 234 x 18 x 50.8						
		287400	Man		**2427701**	[+] 24277 16.5				**91056800**	ø 180 x 32	
1.1	06/03→	45 / 61	Man		**82511100**					**97037800**		
					92146800	ø 234 x 18 x 50.8		Man		**84056800**	bore ø 17.5 ø 180 x 32	
										94037600	ø 180 x 38.7	
		287500	Man		**2427701**	[+] 24277 16.5				**91056800**	ø 180 x 32	
1.1	08/03→05/05	43 / 58										
1.1	03/04→	46 / 63	Man		**82511100**					**97037800**		
					92146800	ø 234 x 18 x 50.8				**94030200**	ø 180 x 36	
ATOS PRIME (MX) 08/99→												
		287600	Man		**2323802**	[+] 23238 16	→07/01			**91056800**	ø 180 x 32	
1.0 i	08/99→	40 / 54	Man		**2427701**	[+] 24277 16.5	08/01→			**97037800**		
			Man		**82511100**		vented disc	Man		**84056800**	bore ø 17.5 ø 180 x 32	
			Man		**82512700**		solid disc			**94037600**	ø 180 x 38.7	02/01→
					92102800	ø 230 x 11 x 43.7				**94030200**	ø 180 x 36	→01/01
					92146800	ø 234 x 18 x 50.8						
		287700	Man		**2323802**	[+] 23238 16	→07/01			**91056800**	ø 180 x 32	
1.0 i	03/01→	43 / 58	Man		**2427701**	[+] 24277 16.5	08/01→			**97037800**		
			Man		**82511100**		vented disc	Man		**84056800**	bore ø 17.5 ø 180 x 32	
			Man		**82512700**		solid disc			**94030200**	ø 180 x 36	
					92102800	ø 230 x 11 x 43.7						
					92146800	ø 234 x 18 x 50.8						
		287800	Man		**2427701**	[+] 24277 16.5				**91056800**	ø 180 x 32	
1.1	06/03→	43 / 59										
1.1	09/05→	46 / 63	Man		**82511100**		vented disc			**97037800**		
			Man		**82512700**		solid disc			**94030200**	ø 180 x 36	
					92102800	ø 230 x 11 x 43.7						
					92146800	ø 234 x 18 x 50.8						

ATOZ (MX) 02/98→08/08 → ATOS (MX), Page 464
AVANTE (XD) 06/00→07/06 → ELANTRA (XD), Page 466
AVANTE II (J-2) 11/95→09/00 → LANTRA II (J-2), Page 476
AVANTE Stufenheck (HD) 06/06→06/11 → ELANTRA Saloon (HD), Page 467
AVANTE Stufenheck (XD) 06/00→07/06 → ELANTRA Saloon (XD), Page 468
AZERA (HG) 02/11→ → GRANDEUR (HG), Page 469
AZERA (TG) 04/05→11/11 → GRANDEUR (TG), Page 469

		kW / hp											
BAKKI Pritsche/Fahrgestell 01/04→ → H100 Platform/Chassis, Page 472													
CLICK (TB) 09/02→06/09 → GETZ (TB), Page 469													
COUPE (GK) 08/01→08/09													
		287900	Man		2389101	[+] 23891 16.9		Sum		2155301	[+] 21553 14	
1.6 16V	03/02→08/09	77 / 105										
1.6 16V	03/02→08/09	79 / 107	Man		82071600			Man		82073100		
2.0	08/01→08/09	100 / 136										
2.0	03/02→08/09	102 / 139										
2.0 GLS	02/03→08/09	105 / 143		PRO	92133903	ø 280 x 26 x 47.4				92166700	ø 258 x 10 x 45.4	
2.7 V6	03/02→08/09	123 / 167										
2.7 V6	01/07→08/09	121 / 165										
COUPE (RD) 07/96→04/02													
		288000	Sum		2172501	[+] 21725 17		Sum		2155301	[+] 21553 14	⊕ ABS
1.6 16V	03/98→04/02	85 / 116										
1.6 i 16V	12/96→04/02	84 / 114	Sum		82052100					82503400		⊕ ABS
1.6 i 16V	08/00→01/02	79 / 107										
					92130800	ø 257 x 24 x 45				91052300	ø 203.2 x 39	⊖ ABS
									PRO	92117103	ø 258 x 10 x 40.3	⊕ ABS
										94034900	ø 203,2 x 47	⊖ ABS
		288100	Sum		2172501	[+] 21725 17		Sum		2155301	[+] 21553 14	
1.8 SX	07/96→04/02	94 / 128										
2.0 16V	08/96→04/02	102 / 139	Sum		82052100		→08/98			82503400		
			Man		82071600		09/98→		PRO	92117103	ø 258 x 10 x 40.3	
					92062700	ø 257 x 22 x 34	→08/98					
					92130800	ø 257 x 24 x 45	09/98→					
		288200	Sum		2172501	[+] 21725 17		Sum		2155301	[+] 21553 14	
2.0	08/99→01/02	101 / 137										
2.0 16V	03/01→04/02	99 / 135	Man		82071600					82503400		
F2 Evolution	01/99→05/99	115 / 154										
					92130800	ø 257 x 24 x 45			PRO	92117103	ø 258 x 10 x 40.3	
ELANTRA (XD) 06/00→07/06													
		288300	Ake		2403101	[+] 24031 16.8	→08/03	Sum		2155301	[+] 21553 14	⊕ ABS
1.6	06/00→07/06	66 / 90										
1.6	06/00→07/06	79 / 107	Man		2436901	[+] 24369 17	08/03→			82503400		⊕ ABS
1.6	05/03→07/06	77 / 105										
2.0 CRDi	04/01→07/06	83 / 113	Ake		82500300		→08/03			91059500	ø 203.2 x 38	⊖ ABS
			Man		82505600		08/03→	Sum		84059500	bore ø 19 ø 203.2 x 38	
					92130800	ø 257 x 24 x 45			PRO	92117103	ø 258 x 10 x 40.3	⊕ ABS
					92136600	ø 280 x 26 x 47.3	06/03→			94034900	ø 203,2 x 47	⊖ ABS
		288400	Man		2436901	[+] 24369 17		Sum		2155301	[+] 21553 14	⊕ ABS
1.6	09/03→07/06	82 / 112										
			Man		82505600					82503400		⊕ ABS
					92136600	ø 280 x 26 x 47.3				91059500	ø 203.2 x 38	⊖ ABS
									PRO	92117103	ø 258 x 10 x 40.3	⊕ ABS
										94034900	ø 203,2 x 47	⊖ ABS
		288500	Ake		2403101	[+] 24031 16.8		Sum		2155301	[+] 21553 14	⊕ ABS
1.8	06/00→07/03	79 / 107										
			Ake		82500300					82503400		⊕ ABS
					92136600	ø 280 x 26 x 47.3	06/03→			91059500	ø 203.2 x 38	⊖ ABS
									PRO	92117103	ø 258 x 10 x 40.3	⊕ ABS
										94034900	ø 203,2 x 47	⊖ ABS
		288600	Ake		2403101	[+] 24031 16.8	→08/03	Sum		2155301	[+] 21553 14	⊕ ABS
1.8	06/00→07/06	97 / 132										
2.0	06/00→07/06	102 / 139	Man		2436901	[+] 24369 17	08/03→			82503400		⊕ ABS
2.0	06/00→07/06	104 / 141										
			Ake		82500300		→08/03			91059500	ø 203.2 x 38	⊖ ABS
			Man		82505600		08/03→		PRO	92117103	ø 258 x 10 x 40.3	⊕ ABS
					92130800	ø 257 x 24 x 45				94034900	ø 203,2 x 47	⊖ ABS

→

		kW / hp										
ELANTRA (XD) 06/00→07/06												
288600												
1.8	06/00→07/06	97 / 132			92136600	ø 280 x 26 x 47.3	06/03→					
2.0	06/00→07/06	102 / 139										
2.0	06/00→07/06	104 / 141										
288700			Ake		2403101	[+] 24031 16.8	→08/03	Sum		2155301	[+] 21553 14	⊕ ABS
1.8	11/02→07/06	98 / 133	Man		2436901	[+] 24369 17	08/03→			82503400		⊕ ABS
			Sum		82052100					91059500	ø 203.2 x 38	⊖ ABS
			Ake		82500300		→08/03		PRO	92117103	ø 258 x 10 x 40.3	
			Man		82505600		08/03→			94034900	ø 203,2 x 47	⊖ ABS
					92136600	ø 280 x 26 x 47.3	06/03→					
288800			Man		2436901	[+] 24369 17		Sum		2155301	[+] 21553 14	⊕ ABS
2.0	10/03→07/06	105 / 143	Man		82505600					82503400		⊕ ABS
					92136600	ø 280 x 26 x 47.3		Sum		84059500	bore ø 19 ø 203.2 x 38	⊖ ABS
									PRO	92117103	ø 258 x 10 x 40.3	⊕ ABS
										94034900	ø 203,2 x 47	⊖ ABS
ELANTRA II (J-2) 11/95→09/00 → LANTRA II (J-2), Page 476												
ELANTRA II Estate (J-2) 02/96→10/00 → LANTRA II Wagon (J-2), Page 476												
ELANTRA II Wagon (J-2) 02/96→10/00 → LANTRA II Wagon (J-2), Page 476												
ELANTRA Coupe 09/12→												
288900			Ake		2533701	[+] 25337 15.7	⊕ rear disc brake		PRO	92240003	ø 261.9 x 10 x 45.1	⊕ rear disc brake
1.8	09/12→	108 / 147										
1.8	09/12→	110 / 150			TPM0008		4x			TPM0008		4x
ELANTRA Estate 09/08→12/09												
289000			Man		2389101	[+] 23891 16.9		Man		2354301	[+] 23543 15	⊕ rear disc brake
2.0	09/08→12/09	103 / 140	Man		82071600			Man		82072300		⊕ rear disc brake
				PRO	92240703	ø 275 x 26 x 47.5			PRO	92240803	ø 262 x 10 x 61	⊕ rear disc brake
					TPM0008		4x			TPM0008		4x
										94030200	ø 180 x 36	⊕ rear drum brake
ELANTRA GT (GD) 11/11→ → i30 (GD), Page 473												
ELANTRA Kombi 09/08→12/09 → ELANTRA Estate, Page 467												
ELANTRA LAVITA (FC) 06/01→08/10 → MATRIX (FC), Page 476												
ELANTRA Saloon (HD) 06/06→06/11												
289100			Man		2389101	[+] 23891 16.9			PRO	92240803	ø 262 x 10 x 61	⊕ ABS
1.6 CVVT	06/06→06/11	90 / 122		PRO	92240703	ø 275 x 26 x 47.5				94030200	ø 180 x 36	⊖ ABS
289200				PRO	92240703	ø 275 x 26 x 47.5		Man		2354301	[+] 23543 15	⊕ rear disc brake
2.0 CVVT	06/06→05/10	103 / 140							PRO	92240803	ø 262 x 10 x 61	⊕ rear disc brake
										94030200	ø 180 x 36	⊕ rear drum brake
289300			Man		2436901	[+] 24369 17		Sum		2155301	[+] 21553 14	⊕ ABS
2.0 CVVT	06/06→06/11	105 / 143	Sum		82052100					82503400		⊕ ABS
			Man		82505600					91059500	ø 203.2 x 38	⊖ ABS
					92136600	ø 280 x 26 x 47.3			PRO	92117103	ø 258 x 10 x 40.3	
ELANTRA Saloon (MD, UD) 09/10→												
289400					TPM0008			Ake		2533701	[+] 25337 15.7	⊕ rear disc brake
1.6	06/11→	96 / 130										
1.6	06/11→	97 / 132								TPM0008		
1.6 CRDi	02/11→	94 / 128										
1.8	09/10→	110 / 150										
1.8	03/13→	118 / 160										
1.8 Flex	02/11→	118 / 160										
289500					TPM0008		→2013-10	Ake		2533701	[+] 25337 15.7	⊕ rear disc brake →2013-10
1.8	09/10→	108 / 147										

		kW / hp											
ELANTRA Saloon (MD, UD) 09/10→													
		289500								PRO	**92240003**	ø 261.9 x 10 x 45.1	⊕ rear disc brake →2013-10
1.8	09/10→	108 / 147									**TPM0008**		
ELANTRA Saloon (XD) 06/00→07/06													
		289600	Ake		**2403101**	[+] 24031 16.8	→08/03	Sum		**2155301**	[+] 21553 14	⊕ ABS
1.6	06/00→07/06	66 / 90											
1.6	06/00→07/06	79 / 107	Man		**2436901**	[+] 24369 17	08/03→			**82503400**		⊕ ABS
1.6	05/03→07/06	77 / 105											
1.8	06/00→07/06	97 / 132											
2.0 CRDi	04/01→07/06	83 / 113	Ake		**82500300**		→08/03			**91059500**	ø 203.2 x 38	⊖ ABS
			Man		**82505600**		08/03→	Sum		**84059500**	bore ø 19 ø 203.2 x 38	
					92130800	ø 257 x 24 x 45			PRO	**92117103**	ø 258 x 10 x 40.3	⊕ ABS
					92136600	ø 280 x 26 x 47.3	06/03→			**94034900**	ø 203,2 x 47	⊖ ABS
		289700	Ake		**2403101**	[+] 24031 16.8		Sum		**2155301**	[+] 21553 14	⊕ ABS
1.8	06/00→07/03	79 / 107											
			Ake		**82500300**					**82503400**		⊕ ABS
					92136600	ø 280 x 26 x 47.3	06/03→			**91059500**	ø 203.2 x 38	⊖ ABS
									PRO	**92117103**	ø 258 x 10 x 40.3	⊕ ABS
										94034900	ø 203,2 x 47	⊖ ABS
		289800	Man		**2436901**	[+] 24369 17		Sum		**2155301**	[+] 21553 14	⊕ ABS
1.8	06/04→07/06	93 / 127											
2.0	10/03→07/06	105 / 143	Man		**82505600**					**82503400**		⊕ ABS
					92136600	ø 280 x 26 x 47.3				**91059500**	ø 203.2 x 38	⊖ ABS
									PRO	**92117103**	ø 258 x 10 x 40.3	⊕ ABS
										94034900	ø 203,2 x 47	⊖ ABS
		289900	Ake		**2403101**	[+] 24031 16.8	→08/03	Sum		**2155301**	[+] 21553 14	⊕ ABS
2.0	06/00→07/06	102 / 139											
2.0	06/00→07/06	104 / 141	Man		**2436901**	[+] 24369 17	08/03→			**82503400**		⊕ ABS
			Ake		**82500300**		→08/03			**91059500**	ø 203.2 x 38	⊖ ABS
			Man		**82505600**		08/03→		PRO	**92117103**	ø 258 x 10 x 40.3	⊕ ABS
					92130800	ø 257 x 24 x 45				**94034900**	ø 203,2 x 47	⊖ ABS
					92136600	ø 280 x 26 x 47.3	06/03→					
		290000	Ake		**2403101**	[+] 24031 16.8	→2003-06	Sum		**2155301**	[+] 21553 14	⊕ rear disc brake
2.0	09/02→12/03	101 / 137	Man		**2436901**	[+] 24369 17	2003-06→		PRO	**92117103**	ø 258 x 10 x 40.3	⊕ rear disc brake
					92130800	ø 257 x 24 x 45				**94034900**	ø 203,2 x 47	⊕ rear drum brake
					TPM0008							
ELANTRA Stufenheck (HD) 06/06→06/11 → ELANTRA Saloon (HD), Page 467													
ELANTRA Stufenheck (MD, UD) 09/10→ → ELANTRA Saloon (MD, UD), Page 467													
ELANTRA Stufenheck (XD) 06/00→07/06 → ELANTRA Saloon (XD), Page 468													
EMBERA V (NF) 01/05→11/10 → SONATA V (NF), Page 480													
EQUUS / CENTENNIAL 10/99→03/09													
		290100	Man		**2372601**	[+] 23726 16.5						
3.5	10/99→03/09	155 / 211											
4.5	10/99→09/03	195 / 265											
EQUUS / CENTENNIAL 03/09→													
		290200	Ake		**2551301**	[+] 25513 17.9						
3.8	03/09→	213 / 290											
3.8 GDi	03/09→	246 / 334											
4.6 V8	03/09→	269 / 366											
4.6 V8	03/09→	274 / 373											
		290300	Ake		**2551301**	[+] 25513 17.9	→2011-11-30			**TPM0008**		
4.6	04/11→	270 / 367			**TPM0008**							
		290400			**TPM0008**					**TPM0008**		
5.0 GDi	03/09→	316 / 430										
EXCEL I (X-3) 10/94→01/00 → ACCENT I (X-3), Page 462													

		kW / hp									
EXCEL II (LC) 09/99→11/05 → ACCENT II (LC), Page 463											
EXCEL Saloon (X-3) 09/94→01/00 → ACCENT Saloon (X-3), Page 464											
EXCEL Stufenheck (X-3) 09/94→01/00 → ACCENT Saloon (X-3), Page 464											
FLUIDIC ELANTRA Stufenheck (MD, UD) 09/10→ → ELANTRA Saloon (MD, UD), Page 467											
GALLOPER II (JK-01) 08/98→12/03											
		290500	Sum		**2351801**	[+] 23518 17				**91055300**	ø 270 x 53
2.5 TCi D	08/98→12/03	77 / 105			**82057100**						
2.5 TD	08/98→12/03	65 / 88			**92149400**	ø 277 x 22 x 45.2					
2.5 TD intercooler	08/98→12/03	73 / 99									
2.6 TD All-wheel Drive	08/98→06/03	63 / 86									
3.0 V6	08/98→12/03	104 / 141									
GENESIS (BH) 01/08→ → GENESIS, Page 469											
GENESIS 01/08→											
		290600			**TPM0008**		→2014-03			**TPM0008**		→2014-03
3.8 GDI	09/11→	248 / 337								**91077900**	ø 190 x 26	→2014-03
		290700								**91077900**	ø 190 x 26	
3.8 V6	01/08→	213 / 290										
		290800	Man		**82502800**		23-09-2008→			**TPM0008**		
3.8 V6	01/08→	246 / 335			**TPM0008**					**91077900**	ø 190 x 26	
GENESIS Coupe 01/08→											
		290900								**91077900**	ø 190 x 26	
2.0	01/12→	194 / 264										
2.0 CVVT	06/08→	154 / 209										
2.0 T	01/08→	157 / 214										
2.0 T	11/11→	202 / 275										
2.0 T	04/12→	204 / 277										
3.8	09/09→	228 / 310										
3.8 V6	01/08→	223 / 303										
3.8 V6	11/11→	255 / 347										
3.8 V6	04/12→	260 / 354										
GETZ (TB) 09/02→06/09											
		291000	Ake		**2101204**	[–] 21012 14.8		Man		**2354301**	[+] 23543 15	⊕ rear disc brake
1.1	09/02→09/05	46 / 63			**82501500**					**91063300**	ø 203.2 x 31	⊕ rear drum brake ⊕ ABS
1.1	09/05→06/09	49 / 67			**92134100**	ø 241 x 19 x 48	13" -brake			**91074500**	ø 180 x 32	⊕ rear drum brake ⊖ ABS
1.3	09/03→09/05	63 / 85			**92144700**	ø 256 x 19 x 48	14" -brake	Man		**84063300**	bore ø 17.5 ø 203.2 x 31	⊕ rear drum brake ⊕ ABS
1.3	09/04→06/09	61 / 83			**TPM0008**					**92161300**	ø 262 x 10 x 63.8	⊕ rear disc brake
1.3 i	09/02→03/04	60 / 82								**92161303**	ø 262 x 10 x 63.8	⊕ rear disc brake
1.4 i	08/05→06/09	71 / 97								**94033300**	ø 203,2 x 38.5	⊕ rear drum brake ⊕ ABS
1.5 CRDi	03/03→09/05	60 / 82										
1.5 CRDi	08/05→06/09	65 / 88										
1.5 CRDi GLS	07/04→08/05	75 / 102										
1.5 CRDi GLS	08/05→06/09	81 / 110										
1.5 i	03/03→09/05	73 / 99										
1.6	09/02→09/05	77 / 106										
1.6	08/05→06/09	78 / 106										
GETZ PRIME (TB) 09/02→06/09 → GETZ (TB), Page 469											
GRACE Bus (P) 07/93→10/04 → H100 Bus (P), Page 472											
GRACE Bus 06/98→10/04											
		291100	Luc		**2308101**	[+] 23081 19		Luc		**91015700**	ø 254 x 56	
2.5 TD	06/98→10/01	59 / 80			**92093700**	ø 253 x 20 x 28.6						
2.6 D	10/99→10/04	57 / 78										
GRACE Kasten 12/94→12/04 → H100 Box, Page 471											
GRANDEUR (HG) 02/11→											
		291200			**92166200**	ø 300 x 28 x 47.4	⊖ elect. handbr.	Ake		**2564701**	[+] 25647 15.7	⊖ elect. handbr.
3.0	02/11→	199 / 271			**TPM0008**					**TPM0008**		
3.0	12/11→	195 / 265										
		291300			**TPM0008**			Ake		**2564701**	[+] 25647 15.7	
3.3	06/11→	191 / 260						Man		**82072300**		
										TPM0008		
GRANDEUR (TG) 04/05→11/11											
		291400	Man		**2437501**	[+] 24375 18	→06/10	Man		**2354301**	[+] 23543 15	→06/10 ⊕ EU
2.2 CRDi	06/06→	110 / 150										
2.2 CRDi	06/06→	114 / 155	Man		**2461801**	[+] 24618 17.8	⊕ EU	Ake		**2533701**	[+] 25337 15.7	06/10→ ⊕ EU
2.7	05/06→	141 / 192			**TPM0008**		2x	Man		**82072300**		
3.3	04/05→	173 / 235								**TPM0008**		2x
3.8	06/05→	195 / 265										

		kW / hp											
GRANDEUR (TG) 04/05→11/11													
		291400											
2.2 CRDi	06/06→	110 / 150											
2.2 CRDi	06/06→	114 / 155											
2.7	05/06→	141 / 192											
3.3	04/05→	173 / 235											
3.8	06/05→	195 / 265											
		291500	Man		**2461801**	[+] 24618 17.8			Man		**2354301**	[+] 23543 15	
3.3	02/07→	198 / 269											
		291600	Man		**2461801**	[+] 24618 17.8	⊕ EU		Ake		**2533701**	[+] 25337 15.7	⊕ EU
3.3	11/10→	191 / 260											
					TPM0008		2x				**TPM0008**		2x
											91078000	ø 167 x 27	
		291700	Man		**2461801**	[+] 24618 17.8			Man		**2354301**	[+] 23543 15	→06/10
3.3 Flex	01/07→11/11	177 / 241											
			Man		**82515800**				Ake		**2533701**	[+] 25337 15.7	06/10→
					TPM0008		4x				**TPM0008**		2x
											91078000	ø 167 x 27	06/10→
GRANDEUR (XG) 12/98→12/05 → XG (XG), Page 485													
GRANDEUR Saloon (TG) 04/05→11/11 → GRANDEUR (TG), Page 469													
GRANDEUR Saloon (XG) 12/98→12/05 → XG (XG), Page 485													
GRANDEUR Stufenheck (TG) 04/05→11/11 → GRANDEUR (TG), Page 469													
GRANDEUR Stufenheck (XG) 12/98→12/05 → XG (XG), Page 485													
GRAND i10 (IA) 12/13→ → i10 (IA), Page 472													
GRAND SANTA FÉ 06/13→													
		291800	Man		**2435101**	[+] 24351 17.6					**2552001**	[+] 25520 15.5	
2.2 CRDi All-wheel Drive	06/13→	145 / 197											
			Man		**82502800**				Man		**82517400**		
										PRO	**92223403**	ø 302 x 11 x 71.4	
GRAND STAREX Travel (TQ) 02/08→ → H-1 Travel (TQ), Page 471													
H-1 / GRAND STAREX Travel (TQ) 02/08→ → H-1 Travel (TQ), Page 471													
H-1 / STAREX 06/97→12/07													
		291900	Man		**2353601**	[+] 23536 15.5	→12/01				**91055300**	ø 270 x 53	
2.4	06/97→04/04	82 / 112											
2.4 4WD	02/98→04/04	82 / 112	Man		**2356901**	[+] 23569 17	01/02→						
2.5 TCi	10/97→12/07	73 / 99											
2.5 TD	06/97→04/04	59 / 80	Man		**82072100**		01/02→						
2.5 TD 4WD	02/98→04/04	59 / 80											
2.6 TDiC	10/97→04/04	63 / 86											
		292000	Man		**2353601**	[+] 23536 15.5					**91055300**	ø 270 x 53	
2.4	11/01→04/04	107 / 145											
			Man		**82072100**		01/02→						
					92234500	ø 254 x 24 x 40.1							
		292100	Man		**2356901**	[+] 23569 17					**91055300**	ø 270 x 53	
2.4	02/03→04/04	101 / 137											
2.5 CRDi	12/02→	107 / 145	Man		**82072100**								
2.5 CRDi	12/02→04/04	103 / 140											
2.5 CRDi	12/02→04/04	120 / 163											
2.5 CRDi 4WD	12/02→04/04	103 / 140											
2.5 D	10/97→04/04	62 / 84											
2.5 TCi	05/04→12/07	74 / 101											
		292200									**91055300**	ø 270 x 53	
2.4 4WD	06/01→04/04	99 / 135											
		292300			**2459701**	[+] 24597 17.6					**91078200**	ø 295 x 52	
2.5 CRDi	06/97→04/04	85 / 116											
					92203800	ø 300 x 30 x 52.5							
		292400	Man		**2353601**	[+] 23536 15.5					**91055300**	ø 270 x 53	
2.5 CRDi	06/06→12/07	81 / 110											
			Man		**82072100**								
					92234500	ø 254 x 24 x 40.1							
		292500	Man		**2353601**	[+] 23536 15.5	→12/01		Man		**2448801**	[+] 24488 16.2	⊕ ABS
2.5 D	10/97→04/04	57 / 78											
			Man		**2356901**	[+] 23569 17	01/02→				**91055300**	ø 270 x 53	
			Man		**82072100**		01/02→				**94035800**	ø 295,0 x 66.7	⊖ ABS
		292600	Man		**82072100**		01/02→				**91055300**	ø 270 x 53	
2.5 TD 4WD	03/01→04/04	73 / 99											
2.5 TD 4WD	11/01→04/04	74 / 101											

		kW / hp										
H-1 Box 10/97→12/07												
		292700	Man		2353601	[+] 23536 15.5	→06/03			91075800	ø 295 x 54	
2.4	03/00→04/04	82 / 112										
2.5 TD	03/00→04/04	73 / 99	Man		2356901	[+] 23569 17	06/03→			94035800	ø 295,0 x 66.7	⊖ ABS
2.5 TD	10/01→04/04	74 / 101										
			Man		82072100		01/02→					
					92221800	ø 274 x 26 x 44.3	06/03→					
				PRO	92221803	ø 274.1 x 26 x 44.3	06/03→					
		292800	Man		2356901	[+] 23569 17				91075800	ø 295 x 54	
2.4	11/01→04/04	107 / 145										
			Man		82072100		01/02→			94035800	ø 295,0 x 66.7	⊖ ABS
					92221800	ø 274 x 26 x 44.3						
				PRO	92221803	ø 274.1 x 26 x 44.3						
		292900	Man		2356901	[+] 23569 17		Man		2448801	[+] 24488 16.2	⊕ ABS
2.5 CRDi	07/01→04/04	81 / 110										
2.6 CRDi	10/97→12/07	79 / 107	Man		82072100					91055300	ø 270 x 53	
										94035800	ø 295,0 x 66.7	⊖ ABS
		293000	Man		2356901	[+] 23569 17				91075800	ø 295 x 54	
2.5 CRDi	08/03→04/04	103 / 140										
			Man		82072100					94035800	ø 295,0 x 66.7	⊖ ABS
					92221800	ø 274 x 26 x 44.3						
				PRO	92221803	ø 274.1 x 26 x 44.3						
		293100	Man		2353601	[+] 23536 15.5		Man		2448801	[+] 24488 16.2	⊕ ABS
2.5 TD	03/00→09/00	59 / 80										
										91075800	ø 295 x 54	
										94035800	ø 295,0 x 66.7	⊖ ABS
H-1 Cargo (TQ) 02/08→												
		293200			2459701	[+] 24597 17.6		Man		2459901	[+] 24599 15.5	⊕ ABS
2.4	01/10→	128 / 174										
2.4 i	02/08→	126 / 171	Man		82072100					82076000		⊕ ABS
2.5 CRDi	02/08→	81 / 110										
2.5 CRDi	02/08→	120 / 163			92203800	ø 300 x 30 x 52.5	⊖ AUS			91078200	ø 295 x 52	
2.5 CRDi	02/08→	125 / 170										
2.5 CRDi	08/09→	100 / 136			92221800	ø 274 x 26 x 44.3				92203900	ø 324 x 18 x 82.6	⊖ USA
2.5 CRDi	08/11→	85 / 116										
2.5 CRDI	01/09→	94 / 128		PRO	92221803	ø 274.1 x 26 x 44.3				91076000	ø 212 x 37	⊖ USA
H-1 Kasten 10/97→12/07 → H-1 Box, Page 471												
H-1 Platform/Chassis 06/00→10/05												
		293300	Man		2356901	[+] 23569 17				91055300	ø 270 x 53	
2.5 CRDi	12/02→	103 / 140										
			Man		82072100							
		293400	Man		2353601	[+] 23536 15.5	→12/01			91055300	ø 270 x 53	
2.5 D	06/00→10/05	73 / 99										
			Man		2356901	[+] 23569 17	01/02→					
			Man		82072100		01/02→					
H-1 Pritsche/Fahrgestell 06/00→10/05 → H-1 Platform/Chassis, Page 471												
H-1 Travel (TQ) 02/08→												
		293500			2459701	[+] 24597 17.6		Man		2459901	[+] 24599 15.5	
2.4 i	02/08→	126 / 171										
2.4 i	02/08→	129 / 175	Man		82072100					82076000		
2.5 CRDi	05/08→	120 / 163										
2.5 CRDi	05/08→	125 / 170			92203800	ø 300 x 30 x 52.5				92203900	ø 324 x 18 x 82.6	
2.5 CRDi	08/11→	85 / 116										
2.5 CRDI	02/08→	94 / 128								91076000	ø 212 x 37	
2.5 CRDI	07/08→	100 / 136										
H100 / GRACE Bus (P) 07/93→10/04 → H100 Bus (P), Page 472												
H100 / GRACE Kasten 12/94→12/04 → H100 Box, Page 471												
H100 Box 12/94→12/04												
		293600	Luc		2308101	[+] 23081 19		Luc		91015700	ø 254 x 56	
2.4	10/97→12/04	82 / 111										
2.5 D	12/94→03/00	57 / 78										

		kW / hp											
H100 Box 12/94→12/04													
2.6 D	10/99→12/04	57 / 78			**92093700**	ø 253 x 20 x 28.6							
		293700	Luc		**2308101**	[+] 23081 19							
2.5 TDiC	06/98→10/03	59 / 80			**92093700**	ø 253 x 20 x 28.6							
H100 Bus (P) 07/93→10/04													
		293800	Luc		**2308101**	[+] 23081 19		Luc		**91015700**	ø 254 x 56		
2.4	07/93→03/00	90 / 122											
2.4	01/97→03/00	84 / 114											
2.5 D	12/94→03/00	57 / 78			**92093700**	ø 253 x 20 x 28.6							
2.5 TD	07/93→03/00	59 / 80											
2.6 D	10/99→10/04	57 / 78											
H100 Kasten 12/94→12/04 → H100 Box, Page 471													
H100 Pickup 05/96→10/01													
		293900	Luc		**2308101**	[+] 23081 19		Luc		**91015700**	ø 254 x 56		
2.5 D	05/96→10/01	57 / 78			**92093700**	ø 253 x 20 x 28.6							
H100 Pick-up 05/96→10/01 → H100 Pickup, Page 472													
H100 Platform/Chassis 01/04→													
		294000	Man		**2353601**	[+] 23536 15.5							
2.5 CRDI	01/04→	96 / 130											
2.5 TCI	01/04→	71 / 97											
2.5 TD	11/06→	74 / 101											
2.6 D	01/04→	58 / 79											
H100 Pritsche/Fahrgestell 01/04→ → H100 Platform/Chassis, Page 472													
H300 Cargo (TQ) 02/08→ → H-1 Cargo (TQ), Page 471													
H 150 Bus (P) 07/93→10/04 → H100 Bus (P), Page 472													
H 150 Kasten 12/94→12/04 → H100 Box, Page 471													
H 200 06/97→12/07 → H-1 / STAREX, Page 470													
H 200 Kasten 10/97→12/07 → H-1 Box, Page 471													
HIGHWAY VAN 03/00→													
		294100	Man		**2356901**	[+] 23569 17		Man		**2354301**	[+] 23543 15		
2.0 16V	03/00→	100 / 136	Man		**82072100**			Man		**82072300**			
2.7 V6 24V	03/00→	125 / 170			**92131000**	ø 276 x 26 x 47.2				**92134000**	ø 284 x 10.1 x 61.1		
HR Caixa 05/04→ → PORTER Box, Page 477													
HR Camião de plataforma/chassis 01/04→ → H100 Platform/Chassis, Page 472													
HR Camião de plataforma/chassis 04/07→ → PORTER Platform/Chassis, Page 477													
HR Kasten 05/04→ → PORTER Box, Page 477													
HR Pritsche/Fahrgestell 01/04→ → H100 Platform/Chassis, Page 472													
HR Pritsche/Fahrgestell 04/07→ → PORTER Platform/Chassis, Page 477													
i10 (IA) 12/13→													
		294200	Man		**2427501**	[+] 24275 16.8		Man		**2427601**	[+] 24276 14.8	⊕ rear disc brake	
1,0 LPG	02/14→	51 / 69			**92147100**	ø 241 x 18 x 48.7				**92147200**	ø 234 x 10 x 37.5	⊕ rear disc brake	
1.0	12/13→	49 / 67			**TPM0008**					**TPM0008**			
1.2	12/13→	64 / 87								**94035900**	ø 203,2 x 40.5	⊕ rear drum brake	
i10 (PA) 10/07→													
		294300	Man		**2427501**	[+] 24275 16.8		Man		**2427601**	[+] 24276 14.8	⊕ rear disc brake	
1.0	01/11→	51 / 69			**92147100**	ø 241 x 18 x 48.7				**92147200**	ø 234 x 10 x 37.5	⊕ rear disc brake	
1.1	04/11→	51 / 69			**TPM0008**					**TPM0008**		⊕ rear disc brake	
1.1 LPG	04/11→	51 / 69								**94035900**	ø 203,2 x 40.5	⊕ rear drum brake	
1.2	04/11→	63 / 86											
		294400	Man		**2427501**	[+] 24275 16.8		Man		**2427601**	[+] 24276 14.8	→12/10 01/11→ ⊕ rear disc brake	
1.1	12/07→	48 / 65			**92147100**	ø 241 x 18 x 48.7				**92147200**	ø 234 x 10 x 37.5	→12/10 01/11→ ⊕ rear disc brake	
1.1	01/08→	49 / 67			**TPM0008**					**TPM0008**		→12/10 01/11→ ⊕ rear disc brake	
1.2	10/07→	59 / 80								**94035900**	ø 203,2 x 40.5	01/11→ ⊕ rear drum brake	
1.2	11/08→	57 / 78											
		294500	Man		**2427501**	[+] 24275 16.8		Man		**2427601**	[+] 24276 14.8		
1.1 CRDi	01/08→	55 / 75											

→

		kW / hp									
i10 (PA) 10/07→											
		294500									
1.1 CRDi	01/08→	55 / 75		92196500	ø 252 x 18 x 48.7			92147200	ø 234 x 10 x 37.5	
				TPM0008				TPM0008		
i20 (PB, PBT) 08/08→											
		294600	Man	2491001	[+] 24910 16.7	⊖ ESP	Man	2494901	[+] 24949 16.5	⊕ ESP
1.1 CRDi	03/12→	55 / 75								
1.2	08/08→	59 / 80	Man	2501901	[+] 25019 17.5	⊕ ESP	Bos	82514100		⊕ ESP
1.2	09/08→	57 / 78								
1.2	03/12→	63 / 86								
1.4	09/08→	74 / 101	Man	82508500		⊕ ESP		91072600	ø 203 x 32	⊖ ESP
1.4 CRDi	08/08→	66 / 90								
1.4 CRDi	08/09→	55 / 75		82513500		⊖ ESP		92161300	ø 262 x 10 x 63.8	⊕ ESP
1.6	09/08→	93 / 126								
1.6	12/08→	91 / 124								
1.6 CRDi	09/08→	85 / 116		92164700	ø 256 x 22 x 46.5	⊕ ESP		92161303	ø 262 x 10 x 63.8	⊕ ESP
1.6 CRDi	01/09→	94 / 128								
				92204900	ø 256 x 18 x 46.8	⊖ ESP		94035900	ø 203,2 x 40.5	⊖ ESP
				92164703	ø 256 x 22 x 46.5	⊕ ESP		91075400	ø 167 x 31.5	⊕ ESP
		294700	Man	2491001	[+] 24910 16.7	⊖ ESP	Man	2494901	[+] 24949 16.5	⊕ ESP
1.2	01/13→	62 / 84								
			Man	2501901	[+] 25019 17.5	⊕ ESP		91072600	ø 203 x 32	⊖ ESP
				92164700	ø 256 x 22 x 46.5	⊕ ESP		92161300	ø 262 x 10 x 63.8	⊕ ESP
				92204900	ø 256 x 18 x 46.8	⊖ ESP		92161303	ø 262 x 10 x 63.8	⊕ ESP
				92164703	ø 256 x 22 x 46.5	⊕ ESP		TPM0008		
				TPM0008				94035900	ø 203,2 x 40.5	⊖ ESP
i30 (FD) 10/07→11/11											
		294800	Man	2396601	[+] 23966 16.4		Man	2432001	[+] 24320 15.9	
1.4	10/07→11/11	77 / 105								
1.4	10/07→11/11	80 / 109	Man	82073000			Man	82074000		
1.6	10/07→11/11	85 / 116								
1.6	10/07→11/11	90 / 122								
1.6	02/08→11/11	93 / 126		92161603	ø 280 x 26 x 47.2			92161700	ø 262 x 10 x 61.1	
1.6 CRDi	10/07→11/11	66 / 90								
1.6 CRDi	10/07→11/11	85 / 116						92161703	ø 262 x 10 x 61.1	
1.6 CRDi	01/10→11/11	94 / 128								
								91068100	ø 172 x 27	
								97036600		
		294900	Man	2396601	[+] 23966 16.4		Man	2432001	[+] 24320 15.9	
2.0	10/07→11/11	105 / 143								
2.0 CRDi	10/07→11/11	100 / 136	Man	82073000			Man	82074000		
2.0 CRDi	10/07→11/11	103 / 140								
				92166200	ø 300 x 28 x 47.4	⊕ rim size 16"		92161700	ø 262 x 10 x 61.1	
				92161603	ø 280 x 26 x 47.2	⊕ rim size 15"		92161703	ø 262 x 10 x 61.1	
								91068100	ø 172 x 27	
								97036600		
i30 (GD) 11/11→											
		295000	Man	2396601	[+] 23966 16.4	⊕ rim size 15"	Man	2432001	[+] 24320 15.9	Ø 262 mm
1.4	11/11→	73 / 99								
1.6	01/12→	88 / 120	Sum	2491501	[+] 24915 17.3	⊕ rim size 16"	Ake	2533701	[+] 25337 15.7	Ø 284 mm
1.6 CRDi	11/11→	94 / 128								
1.6 CRDi	06/12→	81 / 110								
1.6 GDI	11/11→	95 / 129	Man	82073000		⊕ rim size 15"	Man	82074000		
1.6 GDI	11/11→	99 / 135								
1.8	01/12→	110 / 150		92166200	ø 300 x 28 x 47.4	⊕ rim size 16"		92161700	ø 262 x 10 x 61.1	
				92161603	ø 280 x 26 x 47.2	⊕ rim size 15"		92161703	ø 262 x 10 x 61.1	
								92252703	ø 284 x 10 x 25.8	
								91068100	ø 172 x 27	
								97036600		
		295100	Man	2396601	[+] 23966 16.4	⊕ rim size 15"	Man	2432001	[+] 24320 15.9	Ø 262 mm
1.4 CRDi	11/11→	66 / 90								
			Sum	2491501	[+] 24915 17.3	⊕ rim size 16"	Ake	2533701	[+] 25337 15.7	Ø 284 mm
			Man	82073000		⊕ rim size 15"	Man	82074000		

F - H

kW / hp											
i30 (GD) 11/11→											
295100											
1.4 CRDi	11/11→	66 / 90		92166200	ø 300 x 28 x 47.4	⊕ rim size 16"		92161700	ø 262 x 10 x 61.1	
			PRO	92243203	ø 280 x 23 x 44.3	⊕ rim size 15"	PRO	92161703	ø 262 x 10 x 61.1	
							PRO	92252703	ø 284 x 10 x 25.8	
								91068100	ø 172 x 27	
								97036600		
i30 Coupe 05/13→											
295200			Man	2396601	[+] 23966 16.4		Man	2432001	[+] 24320 15.9	
1.4	05/13→	73 / 99								
1.4 CRDi	05/13→	66 / 90	Man	82073000			Man	82074000		
1.6 CRDi	05/13→	94 / 128								
1.6 GDI	05/13→	99 / 135	PRO	92161603	ø 280 x 26 x 47.2			92161700	ø 262 x 10 x 61.1	
							PRO	92161703	ø 262 x 10 x 61.1	
								91068100	ø 172 x 27	
								97036600		
i30 CW (FD) 10/07→06/12											
295300			Man	2396601	[+] 23966 16.4		Man	2432001	[+] 24320 15.9	
1.4	10/07→06/12	77 / 105								
1.4	11/09→06/12	80 / 109	Man	82073000			Man	82074000		
1.6	02/08→06/12	85 / 116								
1.6	02/08→06/12	90 / 122								
1.6	02/08→06/12	93 / 126	PRO	92161603	ø 280 x 26 x 47.2			92161700	ø 262 x 10 x 61.1	
1.6 CRDi	02/08→06/12	66 / 90					PRO	92161703	ø 262 x 10 x 61.1	
1.6 CRDi	02/08→06/12	85 / 116						91068100	ø 172 x 27	
1.6 CRDi	01/10→06/12	94 / 128						97036600		
295400			Man	2396601	[+] 23966 16.4		Man	2432001	[+] 24320 15.9	
2.0	02/08→06/12	105 / 143								
2.0 CRDi	02/08→06/12	103 / 140	Man	82073000			Man	82074000		
2.0 CRDi	10/08→06/12	100 / 136		92166200	ø 300 x 28 x 47.4	⊕ rim size 16"		92161700	ø 262 x 10 x 61.1	
			PRO	92161603	ø 280 x 26 x 47.2	⊕ rim size 15"	PRO	92161703	ø 262 x 10 x 61.1	
								91068100	ø 172 x 27	
								97036600		
i30 CW (GD) 06/12→											
295500			Sum	2491501	[+] 24915 17.3	⊕ rim size 16"	Ake	2533701	[+] 25337 15.7	⊕ elect. handbr.
1.4	06/12→	73 / 99								
1.4 CRDi	06/12→	66 / 90		92166200	ø 300 x 28 x 47.4	⊕ rim size 16"	Man	82074000		
1.6	06/12→	88 / 120								
1.6	06/12→	95 / 129	PRO	92243203	ø 280 x 23 x 44.3	⊕ rim size 15"	PRO	92252703	ø 284 x 10 x 25.8	⊕ elect. handbr.
1.6 CRDi	06/12→	81 / 110						TPM0008		
1.6 CRDi	06/12→	94 / 128						91068100	ø 172 x 27	
1.6 GDI	06/12→	99 / 135						97036600		
i40 (VF) 03/12→											
295600				2520501	[+] 25205 17.5		Ake	2533701	[+] 25337 15.7	
1.6 GDI	03/12→	99 / 135								
1.7 CRDi	03/12→	85 / 116		82510900		⊕ rim size 16"	PRO	92239103	ø 284 x 10 x 24.9	⊕ rim size 16"
1.7 CRDi	03/12→	100 / 136								
2.0 GDI	03/12→	131 / 178		92166500	ø 300 x 28 x 47.2	⊕ rim size 16"	PRO	92239203	ø 300 x 10 x 24.7	⊕ rim size 17" rim size 18"
			PRO	92237803	ø 320 x 28 x 47.4	⊕ rim size 17" rim size 18"		TPM0008		2x
				TPM0008						
i40 CW (VF) 07/11→											
295700				2520501	[+] 25205 17.5		Ake	2533701	[+] 25337 15.7	
1.6 GDI	07/11→	99 / 135								
1.7 CRDi	07/11→	85 / 116		82510900		⊕ rim size 16"	PRO	92239103	ø 284 x 10 x 24.9	⊕ rim size 16"
1.7 CRDi	07/11→	100 / 136								
2.0 GDI	07/11→	130 / 177								

→

		kW / hp										
i40 CW (VF) 07/11→												
		295700										
1.6 GDI	07/11→	99 / 135		92166500	ø 300 x 28 x 47.2	⊕ rim size 16"		PRO 92239203	ø 300 x 10 x 24.7	⊕ rim size 17" rim size 18"		
1.7 CRDi	07/11→	85 / 116		PRO 92237803	ø 320 x 28 x 47.4	⊕ rim size 17" rim size 18"		TPM0008		2x		
1.7 CRDi	07/11→	100 / 136										
2.0 GDI	07/11→	130 / 177		TPM0008								
i45 VI Saloon (YF) 01/09→ → SONATA VI (YF), Page 481												
i45 VI Stufenheck (YF) 01/09→ → SONATA VI (YF), Page 481												
i800 Bus (TQ) 02/08→ → H-1 Travel (TQ), Page 471												
i800 Travel (TQ) 02/08→ → H-1 Travel (TQ), Page 471												
iLoad Box (TQ) 02/08→ → H-1 Cargo (TQ), Page 471												
iLoad Cargo (TQ) 02/08→ → H-1 Cargo (TQ), Page 471												
iMAX Bus (TQ) 02/08→ → H-1 Travel (TQ), Page 471												
iMAX Travel (TQ) 02/08→ → H-1 Travel (TQ), Page 471												
ix20 (JC) 11/10→												
		295800	Man	2389101	[+] 23891 16.9	Mando	Man	2494901	[+] 24949 16.5			
1.2	11/10→	59 / 80		2518701	[+] 25187 17.7	TRW	Man	82074000				
1.4	11/10→	66 / 90	Man	82073000				PRO 92226103	ø 258 x 10 x 40.5			
1.4	11/10→	74 / 100		PRO 92133903	ø 280 x 26 x 47.4			TPM0008				
1.4 CRDi	11/10→	66 / 90		TPM0008								
1.4 CRDi	06/11→	57 / 78										
1.6	11/10→	92 / 125										
1.6 CRDI	06/11→	85 / 116										
1.6 CRDI	06/11→	94 / 128										
ix35 (LM, EL, ELH) 08/09→												
		295900		2520501	[+] 25205 17.5	→04/13	Man	2529201	[+] 25292 15.9			
1.6	11/10→	99 / 135	Man	82073000			Man	82074000				
1.7 CRDi	11/10→	85 / 116		92166500	ø 300 x 28 x 47.2			92161700	ø 262 x 10 x 61.1			
2.0	01/10→	120 / 163						PRO 92161703	ø 262 x 10 x 61.1			
2.0	01/10→	122 / 166										
2.0 CRDi	01/10→	100 / 136										
2.0 CRDi	01/12→	130 / 177										
2.0 CRDi	01/12→	135 / 184										
2.0 Flex	04/12→	131 / 178										
		296000		2520501	[+] 25205 17.5	→04/13	Man	2529201	[+] 25292 15.9			
2.0 4WD	01/10→	120 / 163		82510900			Man	82074000				
2.0 CRDi 4WD	01/10→	100 / 136		92166500	ø 300 x 28 x 47.2			92134000	ø 284 x 10.1 x 61.1			
2.0 CRDi 4WD	01/10→	135 / 184						91078300	ø 190 x 40			
2.0 CRDi 4WD	01/12→	130 / 177										
2.0 CVVT 4WD	08/09→	122 / 166										
2.4 4WD	01/10→	130 / 177										
		296100	Man	82073000			Man	2529201	[+] 25292 15.9			
2.0 GDi	08/13→	122 / 166		92166500	ø 300 x 28 x 47.2		Man	82074000				
								92161700	ø 262 x 10 x 61.1			
								PRO 92161703	ø 262 x 10 x 61.1			
		296200		2520501	[+] 25205 17.5		Man	2529201	[+] 25292 15.9			
2.0 GDi 4WD	08/13→	122 / 166		82510900			Man	82074000				
				92166500	ø 300 x 28 x 47.2			92134000	ø 284 x 10.1 x 61.1			
								91078300	ø 190 x 40			
ix55 01/07→												
		296300		92221700	ø 321 x 32 x 50.8		Man	2459901	[+] 24599 15.5			
3.0 V6 CRDi 4WD	09/08→	176 / 239		PRO 92166003	ø 321 x 28 x 49.6			82076000				
3.0 V6 CRDi 4WD	09/11→	184 / 250						PRO 92242603	ø 324 x 18 x 66.9			
3.8 V6	01/11→	194 / 264						91076000	ø 212 x 37			
3.8 V6 4WD	01/07→	191 / 260										
3.8 V6 4WD	01/08→	199 / 271										
3.8 V6 4WD	01/11→	194 / 264										
		296400		92221700	ø 321 x 32 x 50.8			PRO 92242603	ø 324 x 18 x 66.9			
3.0 V6 CRDi 4WD	11/08→	180 / 245						91076000	ø 212 x 37			
LANTRA (GK) 08/01→08/09 → COUPE (GK), Page 466												
LANTRA (RD) 07/96→04/02 → COUPE (RD), Page 466												

30 kW / hp												
LANTRA II (J-2) 11/95→09/00												
296500		Sum	2172501	[+] 21725 17		Sum	2155301	[+] 21553 14	⊕ ABS
1.5 12V	12/96→09/00	65 / 88		82057100				82503400		⊕ ABS
				92062700	ø 257 x 22 x 34	⊕ ABS		91052300	ø 203.2 x 39	⊖ ABS
				92130700	ø 242 x 19 x 37	⊖ ABS		97032100		⊖ ABS
							PRO	92117103	ø 258 x 10 x 40.3	⊕ ABS
								94034900	ø 203,2 x 47	⊖ ABS
296600		Sum	2172501	[+] 21725 17		Sum	2155301	[+] 21553 14	⊕ ABS
1.6 16V	11/95→09/00	84 / 114								
1.8 16V	11/95→09/00	94 / 128		82057100				82503400		⊕ ABS
1.9 D	03/98→09/00	50 / 68								
2.0	04/97→05/00	100 / 136								
2.0 16V	08/96→09/00	102 / 139		92062700	ø 257 x 22 x 34			91052300	ø 203.2 x 39	⊖ ABS
								97032100		⊖ ABS
							PRO	92117103	ø 258 x 10 x 40.3	⊕ ABS
								94034900	ø 203,2 x 47	⊖ ABS
296700		Sum	2172501	[+] 21725 17		Sum	2155301	[+] 21553 14	⊕ ABS
1.6 i	11/95→09/00	66 / 90								
				82057100				82503400		⊕ ABS
				92062700	ø 257 x 22 x 34	→03/98		91052300	ø 203.2 x 39	⊖ ABS
				92130800	ø 257 x 24 x 45	04/98→		97032100		⊖ ABS
							PRO	92117103	ø 258 x 10 x 40.3	⊕ ABS
								94034900	ø 203,2 x 47	⊖ ABS
LANTRA II Break (J-2) 02/96→10/00 → LANTRA II Wagon (J-2), Page 476										
LANTRA II Saloon (J-2) 11/95→09/00 → LANTRA II (J-2), Page 476										
LANTRA II Stufenheck (J-2) 11/95→09/00 → LANTRA II (J-2), Page 476										
LANTRA II Wagon (J-2) 02/96→10/00										
296800		Sum	2172501	[+] 21725 17		Sum	2155301	[+] 21553 14	⊕ ABS
1.5 12V	04/97→10/00	65 / 88								
				82057100				82503400		⊕ ABS
				92062700	ø 257 x 22 x 34	⊕ ABS		91052300	ø 203.2 x 39	⊖ ABS
				92130700	ø 242 x 19 x 37	⊖ ABS	PRO	92117103	ø 258 x 10 x 40.3	⊕ ABS
								94034900	ø 203,2 x 47	⊖ ABS
296900		Sum	2172501	[+] 21725 17		Sum	2155301	[+] 21553 14	⊕ ABS
1.6 16V	02/96→10/00	84 / 114								
1.6 i	02/96→10/00	66 / 90								
1.8 16V	02/96→10/00	94 / 128		82057100				82503400		⊕ ABS
1.9 D	03/98→10/00	50 / 68								
2.0	04/97→05/00	100 / 136								
2.0 16V	12/96→10/00	102 / 139		92062700	ø 257 x 22 x 34			91052300	ø 203.2 x 39	⊖ ABS
							PRO	92117103	ø 258 x 10 x 40.3	⊕ ABS
								94034900	ø 203,2 x 47	⊖ ABS
LANTRA Mk II (J-2) 11/95→09/00 → LANTRA II (J-2), Page 476										
LANTRA Mk II Estate (J-2) 02/96→10/00 → LANTRA II Wagon (J-2), Page 476										
LANTRA Mk II Wagon (J-2) 02/96→10/00 → LANTRA II Wagon (J-2), Page 476										
LAVITA (FC) 06/01→08/10 → MATRIX (FC), Page 476										
MATRIX (FC) 06/01→08/10										
297000		Sum	2172501	[+] 21725 17	→03/02	Man	2354301	[+] 23543 15	⊕ ABS
1.5 CRDi	10/01→08/10	60 / 82								
1.6	06/01→08/10	76 / 103	Ake	2403101	[+] 24031 16.8	04/02→	Man	82072300		⊕ ABS
1.8	06/01→08/10	90 / 122								
			Sum	82052100		→03/02		91061700	ø 203.2 x 37	
			Ake	82500300		04/02→		97032100		
				92130800	ø 257 x 24 x 45			92130900	ø 262 x 10 x 61	⊕ ABS

→

		kW / hp											
MATRIX (FC) 06/01→08/10													
		297000									94034900	ø 203,2 x 47	
1.5 CRDi	10/01→08/10	60 / 82											
1.6	06/01→08/10	76 / 103											
1.8	06/01→08/10	90 / 122											
		297100	Ake		2403101	[+] 24031 16.8		Man		2354301	[+] 23543 15	⊕ ABS	
1.5 CRDi	12/04→08/10	75 / 102											
1.5 CRDi VGT	08/05→08/10	81 / 110	Ake		82500300			Man		82072300		⊕ ABS	
1.6	01/02→12/05	66 / 90											
1.8	01/05→12/05	127 / 173			92130800	ø 257 x 24 x 45				91061700	ø 203.2 x 37		
										97032100			
										92130900	ø 262 x 10 x 61	⊕ ABS	
										94034900	ø 203,2 x 47		
MONTANA Bus (TQ) 02/08→ → H-1 Travel (TQ), Page 471													
MONTANA Travel (TQ) 02/08→ → H-1 Travel (TQ), Page 471													
PONY I (X-3) 10/94→01/00 → ACCENT I (X-3), Page 462													
PONY A trois volumes (X-3) 09/94→01/00 → ACCENT Saloon (X-3), Page 464													
PONY Stufenheck (X-3) 09/94→01/00 → ACCENT Saloon (X-3), Page 464													
PORTER Box 07/94→04/04													
		297200	Luc		2308101	[+] 23081 19							
2.4	03/96→04/04	82 / 111			92093700	ø 253 x 20 x 28.6							
		297300	Luc		2308101	[+] 23081 19		Luc		91015700	ø 254 x 56		
2.5 CRDi	02/03→04/04	103 / 140											
2.5 TD	07/94→04/04	57 / 78			92093700	ø 253 x 20 x 28.6							
2.5 TD	07/94→04/04	73 / 99											
2.6 TD	07/94→04/04	63 / 86											
PORTER Box 05/04→													
		297400	Man		2353601	[+] 23536 15.5							
2.5	04/07→	71 / 97											
		297500	Man		2356901	[+] 23569 17							
2.5 CRDi	05/04→	103 / 140											
2.5 TCi	05/04→	74 / 101	Man		82072100								
					92234500	ø 254 x 24 x 40.1							
PORTER Bus 07/94→04/04													
		297600	Luc		2308101	[+] 23081 19		Luc		91015700	ø 254 x 56		
2.4	03/96→04/04	82 / 111			92093700	ø 253 x 20 x 28.6				83015702	bore ø 25.4 ø 254 x 56		
		297700	Luc		2308101	[+] 23081 19		Luc		91015700	ø 254 x 56		
2.5 CRDi	02/03→04/04	103 / 140											
2.5 TD	07/94→04/04	57 / 78			92093700	ø 253 x 20 x 28.6							
		297800	Luc		2308101	[+] 23081 19							
2.5 TD	07/94→04/04	73 / 99			92093700	ø 253 x 20 x 28.6							
PORTER Kasten 07/94→04/04 → PORTER Box, Page 477													
PORTER Kasten 05/04→ → PORTER Box, Page 477													
PORTER Pickup 07/94→04/04													
		297900	Luc		2308101	[+] 23081 19							
2.4	03/96→04/04	82 / 111											
2.5 TD	03/96→04/04	69 / 94			92093700	ø 253 x 20 x 28.6							
		298000	Luc		2308101	[+] 23081 19		Luc		91015700	ø 254 x 56		
2.5 CRDi	02/03→04/04	103 / 140											
2.5 TD	07/94→04/04	57 / 78											
2.5 TD	07/94→04/04	73 / 99			92093700	ø 253 x 20 x 28.6							
2.6 TD	07/94→04/04	63 / 86											
PORTER Pick-up 07/94→04/04 → PORTER Pickup, Page 477													
PORTER Platform/Chassis 04/07→													
		298100	Man		2353601	[+] 23536 15.5							
2.5	04/07→	71 / 97											
PORTER Pritsche/Fahrgestell 01/04→ → H100 Platform/Chassis, Page 472													
PORTER Pritsche/Fahrgestell 04/07→ → PORTER Platform/Chassis, Page 477													
SANTA FÉ I (SM) 09/00→03/06													
		298200	Man		2356901	[+] 23569 17		Man		2354301	[+] 23543 15	⊕ ABS	
2.0	08/01→03/06	99 / 135											
2.0 CRDi	08/01→03/06	83 / 113	Man		82072100		⊕ rim size 15"	Man		82072300		⊕ ABS	
2.0 CRDi 4x4	04/01→03/06	83 / 113											
2.0 CRDi 4x4	08/03→03/06	92 / 125											

F - H

30 kW / hp											
SANTA FÉ I (SM) 09/00→03/06											
2.0 CRDi All-wheel Drive	11/03→02/06	107 / 145	Man		**82502800**		⊕ rim size 16"			**91070400**	ø 254 x 57	⊖ ABS
2.4 16V	02/01→03/06	100 / 136										
2.4 16V	02/01→03/06	107 / 146			**92131000**	ø 276 x 26 x 47.2	⊕ rim size 15"			**97030800**		⊖ ABS
2.4 16V 4x4	02/01→03/06	100 / 136										
2.4 16V 4x4	02/01→03/06	107 / 146			**92136400**	ø 294 x 26 x 46.3	⊕ rim size 16"			**92134000**	ø 284 x 10.1 x 61.1	⊕ ABS
2.7	10/05→03/06	139 / 189										
2.7 4x4	11/00→03/06	132 / 180		PRO	**92136403**	ø 294 x 26 x 46.3	⊕ rim size 16"			**91066400**	ø 190 x 40	⊕ ABS
2.7 V6 4x4	02/01→03/06	127 / 173										
3.5	09/03→02/06	147 / 200								**97037700**		⊕ ABS
3.5 4x4	09/03→02/06	147 / 200										
		298300	Man		**2435101**	[+] 23541 17.6			Man	**2354301**	[+] 23543 15	⊕ ABS
2.2 CRDi	10/05→03/06	110 / 150										
2.2 CRDi 4x4	10/05→03/06	110 / 150	Man		**82072100**		⊕ rim size 15"		Man	**82072300**		⊕ ABS
2.7 4x4	10/05→03/06	139 / 189										
			Man		**82502800**		⊕ rim size 16"			**91070400**	ø 254 x 57	⊖ ABS
					92131000	ø 276 x 26 x 47.2	⊕ rim size 15"			**97030800**		⊖ ABS
					92136400	ø 294 x 26 x 46.3	⊕ rim size 16"			**92134000**	ø 284 x 10.1 x 61.1	⊕ ABS
				PRO	**92136403**	ø 294 x 26 x 46.3	⊕ rim size 16"			**91066400**	ø 190 x 40	⊕ ABS
										97037700		⊕ ABS
		298400	Man		**2356901**	[+] 23569 17			Man	**2354301**	[+] 23543 15	⊕ ABS
2.4 4WD	09/00→12/01	112 / 152										
2.4 4WD	09/03→12/04	103 / 140	Man		**82072100**		⊕ rim size 15"		Man	**82072300**		⊕ ABS
			Man		**82502800**		⊕ rim size 16"			**91070400**	ø 254 x 57	⊖ ABS
					92131000	ø 276 x 26 x 47.2	⊕ rim size 15"			**97030800**		⊖ ABS
					92136400	ø 294 x 26 x 46.3	⊕ rim size 16"			**92134000**	ø 284 x 10.1 x 61.1	⊕ ABS
				PRO	**92136403**	ø 294 x 26 x 46.3	⊕ rim size 16"			**TPM0008**		
					TPM0008					**91066400**	ø 190 x 40	⊕ ABS
										97037700		⊕ ABS
SANTA FÉ II (CM) 08/04→01/09											
		298500	Man		**2435101**	[+] 24351 17.6				**2552001**	[+] 25520 15.5	
2.0 CRDi	12/10→	110 / 150										
					TPM0008				Man	**82517400**		
				PRO						**92223403**	ø 302 x 11 x 71.4	
										91057900	ø 170 x 40	
		298600	Man		**2435101**	[+] 24351 17.6				**2552001**	[+] 25520 15.5	
2.0 CRDi 4x4	12/10→	110 / 150										
2.4	11/10→	128 / 174			**TPM0008**				Man	**82517400**		
2.4 4x4	07/10→	128 / 174										
3.5	02/11→	210 / 286								**92223403**	ø 302 x 11 x 71.4	
3.5 4x4	02/11→	210 / 286										
										91075900	ø 190 x 26	
		298700	Man		**2435101**	[+] 24351 17.6	⊕ EU		Man	**2448801**	[+] 24488 16.2	→09/09
2.2 CRDi	03/06→	102 / 139					→02/09 ⊖ USA ⊖ CDN					
2.2 CRDi	03/06→	114 / 155								**2552001**	[+] 25520 15.5	09/09→ ⊖ USA
2.2 CRDi	01/09→	145 / 197	Man		**82502800**							
2.2 CRDi 4x4	03/06→	102 / 139										
2.2 CRDi 4x4	03/06→	114 / 155		PRO	**92166003**	ø 321 x 28 x 49.6	→09/09 ⊕ EU		Man	**82517400**		
2.2 CRDi 4x4	01/09→	145 / 197										
2.2 CRDi GLS	03/06→	110 / 150		PRO	**92253603**	ø 298 x 28 x 50.3	→09/09 ⊖ EU			**92166100**	ø 302 x 11 x 71.5	→09/09
2.2 CRDi GLS 4x4	03/06→	110 / 150										
2.7	08/04→03/06	129 / 175			**TPM0008**					**92166103**	ø 302 x 11 x 71.5	→09/09
2.7 4x4	03/06→	125 / 170										
2.7 4x4	01/07→	147 / 200								**92223403**	ø 302 x 11 x 71.4	09/09→
2.7 V6 GLS	03/06→	139 / 189										
2.7 V6 GLS 4x4	03/06→	139 / 189								**91075900**	ø 190 x 26	09/09→
3.3 Dynamic 4x4	03/06→	173 / 235										
										91079600	ø 189 x 31	→09/09
		298800	Man		**2435101**	[+] 24351 17.6				**2552001**	[+] 25520 15.5	
2.4	09/09→	130 / 177										
2.4 AWD	09/09→	130 / 177	Man		**82502800**				Man	**82517400**		2010-06→
					TPM0008		→09.2012			**92223403**	ø 302 x 11 x 71.4	

→

		kW / hp												
SANTA FÉ II (CM) 08/04→01/09														
		298900	Man		2435101	[+] 24351 17.6	⊕ EU →02/09 ⊖ USA ⊖ CDN	Man		2448801	[+] 24488 16.2	→09/09
2.7	03/06→	125 / 170	Man		82502800					2552001	[+] 25520 15.5	09/09→ ⊖ USA
				PRO	92166003	ø 321 x 28 x 49.6	→09/09 ⊕ EU	Man		82517400		
				PRO	92253603	ø 298 x 28 x 50.3	→09/09 ⊖ EU			92166100	ø 302 x 11 x 71.5	→09/09
					TPM0008				PRO	92166103	ø 302 x 11 x 71.5	→09/09
									PRO	92223403	ø 302 x 11 x 71.4	09/09→
										91075900	ø 190 x 26	→09/09
										91079600	ø 189 x 31	09/09→
		299000	Man		2435101	[+] 24351 17.6	⊕ EU ⊖ USA ⊖ CDN	Man		2448801	[+] 24488 16.2	
3.3	07/07→01/09	180 / 245	Man		82502800					92166100	ø 302 x 11 x 71.5	
				PRO	92166003	ø 321 x 28 x 49.6	⊕ EU		PRO	92166103	ø 302 x 11 x 71.5	
				PRO	92253603	ø 298 x 28 x 50.3	⊖ EU			91079600	ø 189 x 31	
					TPM0008							
		299100	Man		82502800					2552001	[+] 25520 15.5	⊖ USA
3.5 4x4	07/10→	210 / 286						Man		82517400		
									PRO	92223403	ø 302 x 11 x 71.4	
										91075900	ø 190 x 26	
		299200	Man		82502800		⊖ EU			2552001	[+] 25520 15.5	⊖ USA
3.5 4x4	08/11→	204 / 277						Man		82517400		
									PRO	92223403	ø 302 x 11 x 71.4	
										91075900	ø 190 x 26	
SANTA FÉ III (DM) 09/12→												
		299300	Man		2435101	[+] 24351 17.6				2552001	[+] 25520 15.5	
2.0	09/12→	197 / 268	Man		82502800			Man		82517400		
2.0 4WD	09/12→	197 / 268							PRO	92223403	ø 302 x 11 x 71.4	
		299400	Man		2435101	[+] 24351 17.6	⊕ EU			2552001	[+] 25520 15.5	⊕ EU
2.0 CRDi	09/12→	110 / 150										
2.0 CRDi 4WD	09/12→	110 / 150										
2.2 CRDi	09/12→	145 / 197	Man		82502800			Man		82517400		
2.2 CRDi 4WD	09/12→	145 / 197										
2.4	09/12→	141 / 192			TPM0008				PRO	92223403	ø 302 x 11 x 71.4	
2.4 4WD	09/12→	141 / 192								TPM0008		
SANTAMO 10/98→												
		299500	Sum		2164701	[+] 21647 16		Ake		2170602	[+] 21706 15.5	⊕ ABS Akebono
2.0	10/98→10/02	77 / 105										
2.0 16V	05/99→	102 / 139	Ake		82031100			Man		2360801	[+] 23608 15	⊕ ABS Mando
2.0 16V 4x4	05/99→	102 / 139			92082900	ø 256 x 24 x 45.5	→11/00	Ake		82031100		
					92103900	ø 256 x 24 x 45	→11/00			91047500	ø 228.6 x 42	⊖ ABS
										92104000	ø 262 x 10 x 61.6	⊕ ABS
SANTRO XING (MX) 02/98→08/08 → ATOS (MX), Page 464												
SATALLITE 06/97→12/07 → H-1 / STAREX, Page 470												
SOLARIS IV (RB) 11/10→ → ACCENT IV (RB), Page 463												
SOLARIS IV Stufenheck (RB) 11/10→ → ACCENT IV Saloon (RB), Page 463												
SOLARIS IV седан (RB) 11/10→ → ACCENT IV Saloon (RB), Page 463												
SONATA IV (EF) 03/98→05/05												
		299600	Sum		2172501	[+] 21725 17		Man		2354301	[+] 23543 15	
2.0 16V	06/98→10/01	100 / 136										
2.4 16V	03/98→10/01	105 / 143										

F - H

		kW / hp											
SONATA IV (EF) 03/98→05/05													
2.5 i V6	08/98→09/01	127 / 173			92130800	ø 257 x 24 x 45		Man		82072300		
2.5 V6 24V	06/98→10/01	118 / 160								92130900	ø 262 x 10 x 61	
										91070300	ø 168 x 32	
										97038900		
		299700	Man		2389101	[+] 23891 16.9		Man		2354301	[+] 23543 15	
2.0 16V	10/01→11/04	96 / 131										
2.4	10/01→05/05	104 / 141										
2.7 i V6	10/01→05/05	132 / 180										
2.7 V6	10/01→11/04	123 / 167										
2.7 V6	10/01→11/04	127 / 173										
2.7 V6	11/02→11/04	129 / 175										
					92136600	ø 280 x 26 x 47.3		Man		82072300		
										92130900	ø 262 x 10 x 61	
										91070300	ø 168 x 32	
										97038900		
		299800	Man		2389101	[+] 23891 16.9	2001-06→	Man		2354301	[+] 23543 15	⊕ rear disc brake
2.0 Flex	04/01→11/04	98 / 133	Man		2389105	[+] 23891 17.8	→2001-06			92130900	ø 262 x 10 x 61	⊕ rear disc brake
			Man		82071600					TPM0008		⊕ rear disc brake
					92136600	ø 280 x 26 x 47.3				91070300	ø 168 x 32	
					TPM0008							
SONATA IV Saloon (EF) 03/98→05/05 → SONATA IV (EF), Page 479													
SONATA IV Stufenheck (EF) 03/98→05/05 → SONATA IV (EF), Page 479													
SONATA V (NF) 01/05→11/10													
		299900	Man		2437501	[+] 24375 18	⊕ EU	Man		2354301	[+] 23543 15	→11/07 ⊕ EU
2.0 CRDi	02/06→	100 / 136										
2.0 CRDi	02/06→	103 / 140	Man		2389105	[+] 23891 17.8	⊖ EU	Ake		2493401	[+] 24934 15.5	⊖ EU ⊕ EU 11/07→
			Man		82515800		→12/07	Ake		2533701	[+] 25337 15.7	06/10→ ⊕ EU ⊕ rim size 15"
					92166500	ø 300 x 28 x 47.2	⊕ EU	Man		82072300		
					TPM0008		2x			92166600	ø 284 x 10 x 54.3	→05/07 ⊕ rim size 16"
										TPM0008		2x
										91070700	ø 167 x 27	
		300000	Man		2437501	[+] 24375 18		Man		2354301	[+] 23543 15	
2.0 CRDi	02/06→	105 / 143	Man		82515800					92166600	ø 284 x 10 x 54.3	⊕ rim size 16"
					92166500	ø 300 x 28 x 47.2			PRO	92156803	ø 262 x 10 x 61.2	⊕ rim size 15"
					TPM0008					TPM0008		
										91070700	ø 167 x 27	
		300100	Man		2437501	[+] 24375 18	⊕ EU	Ake		2493401	[+] 24934 15.5	
2.0 CRDi	03/09→	110 / 150	Man		2389105	[+] 23891 17.8		Ake		2533701	[+] 25337 15.7	06/10→ ⊕ EU ⊕ rim size 15"
					92166500	ø 300 x 28 x 47.2	⊕ EU	Man		82072300		
					TPM0008		2x			TPM0008		2x
										91070700	ø 167 x 27	
		300200	Man		2437501	[+] 24375 18	⊕ EU 12/05→	Man		2354301	[+] 23543 15	→11/07 ⊕ EU
2.0 VVTi GLS	05/05→	106 / 144										
2.4	01/05→	119 / 162	Man		2458601	[+] 24586 17.8	→12/05 ⊕ EU	Ake		2493401	[+] 24934 15.5	⊖ EU ⊕ EU 11/07→
			Man		2389105	[+] 23891 17.8	⊖ EU	Ake		2533701	[+] 25337 15.7	06/10→ ⊕ EU ⊕ rim size 15"
			Man		82515800		⊖ EU	Man		82072300		
					92166500	ø 300 x 28 x 47.2	02/06→ ⊕ EU			92166600	ø 284 x 10 x 54.3	→05/07 ⊕ rim size 16"
				PRO	92133903	ø 280 x 26 x 47.4	→02/06 ⊕ EU		PRO	92156803	ø 262 x 10 x 61.2	→05/07 ⊕ rim size 15"
					TPM0008		2x			TPM0008		2x

→

		kW / hp										
SONATA V (NF) 01/05→11/10												
		300200										
2.0 VVTi GLS	05/05→	106 / 144								91070700	ø 167 x 27	
2.4	01/05→	119 / 162										
		300300	Man	2437501	[+] 24375 18	⊕ EU	Ake	2493401	[+] 24934 15.5			
2.0 VVTi GLS	01/08→	121 / 165	Man	2389105	[+] 23891 17.8	⊖ EU	Ake	2533701	[+] 25337 15.7	06/10→ ⊕ EU ⊕ rim size 15"		
				92166500	ø 300 x 28 x 47.2	⊕ EU	Man	82072300				
				TPM0008		2x		TPM0008		2x		
								91070700	ø 167 x 27			
		300400	Man	2389105	[+] 23891 17.8		Ake	2493401	[+] 24934 15.5			
2.4	11/07→	132 / 180		TPM0008		2x	Man	82072300				
								TPM0008		2x		
								91070700	ø 167 x 27			
		300500	Man	2437501	[+] 24375 18	⊕ EU	Ake	2493401	[+] 24934 15.5			
2.4	06/08→	127 / 173	Man	2389105	[+] 23891 17.8	⊖ EU	Ake	2533701	[+] 25337 15.7	06/10→ ⊕ EU ⊕ rim size 15"		
			Man	82515800		⊖ EU		TPM0008		2x		
				92166500	ø 300 x 28 x 47.2	⊕ EU		91070700	ø 167 x 27			
				TPM0008		2x						
		300600	Man	2437501	[+] 24375 18		Ake	2533701	[+] 25337 15.7			
2.4 CVVT	01/09→11/10	134 / 182	Man	82515800				TPM0008				
				92166500	ø 300 x 28 x 47.2							
				TPM0008								
		300700	Man	2437501	[+] 24375 18	⊕ EU	Man	2354301	[+] 23543 15	02/06→ →11/07 ⊕ EU		
3.3	01/05→	171 / 233		92166500	ø 300 x 28 x 47.2	⊕ EU	Ake	2493401	[+] 24934 15.5	11/07→		
3.3	06/05→	173 / 235		TPM0008		2x	Ake	2533701	[+] 25337 15.7	06/10→ ⊕ EU ⊕ rim size 15"		
							Man	82072300				
								92166600	ø 284 x 10 x 54.3	→05/07		
								TPM0008		2x		
								91070700	ø 167 x 27			
		300800	Man	2437501	[+] 24375 18	⊕ EU	Ake	2493401	[+] 24934 15.5			
3.3	01/08→	184 / 250		92166500	ø 300 x 28 x 47.2	⊕ EU	Ake	2533701	[+] 25337 15.7	06/10→ ⊕ EU ⊕ rim size 15"		
				TPM0008		2x	Man	82072300				
								TPM0008		2x		
								91070700	ø 167 x 27			
SONATA V Saloon (NF) 01/05→11/10 → SONATA V (NF), Page 480												
SONATA V Stufenheck (NF) 01/05→11/10 → SONATA V (NF), Page 480												
SONATA VI (YF) 01/09→												
		300900		TPM0008				TPM0008		2x		
2.0	01/09→	110 / 150										
2.0 i	01/11→	121 / 165										
2.4	01/09→	128 / 174										
2.4	01/09→	131 / 178										
2.4 GDI	01/09→	148 / 201										
		301000	Man	82073000			Luc	82074100				
2.0	09/10→	204 / 277										
2.0	07/14→	183 / 249		TPM0008				TPM0008				
2.4	09/10→	149 / 203										
2.4	09/11→	142 / 193										
2.4	10/12→	133 / 181										
2.4	07/14→	138 / 188										
2.4 Hybrid	09/10→	124 / 169										
2.4 Hybrid	09/10→	153 / 208										
SONATA Mk III (EF) 03/98→05/05 → SONATA IV (EF), Page 479												

F - H

TB (TB) 09/02→06/09 → GETZ (TB), Page 469

TERRACAN (HP) 06/01→12/06

		301100	Man		2405901	[+] 24059 16.6		Man		2381301	[+] 23813 15.8	
2.5 D	06/01→10/03	59 / 80										
2.5 D	06/01→10/03	74 / 101	Man		82072100			Man		82077200		
2.9 CRDi	11/01→07/03	110 / 150			92136500	ø 280 x 27 x 42.8			PRO	92146703	ø 315 x 20 x 86.4	
3.5 i V6 4WD	12/01→12/06	147 / 200		PRO	92136503	ø 280 x 27 x 42.8				91068400	ø 190 x 40	
										97036200		
		301200	Man		2405901	[+] 24059 16.6		Man		2381301	[+] 23813 15.8	
2.5 TD	12/01→12/06	74 / 101										
2.9 CRDi 4WD	12/01→12/06	110 / 150	Man		82072100			Man		82077200		
					92136500	ø 280 x 27 x 42.8			PRO	92146703	ø 315 x 20 x 86.4	
				PRO	92136503	ø 280 x 27 x 42.8				91068400	ø 190 x 40	
				PRO	92180003	ø 303 x 28 x 43				97036200		
		301300	Man		2372601	[+] 23726 16.5	01/04→	Man		2381301	[+] 23813 15.8	
2.9 CRDi 4WD	11/03→12/06	120 / 163										
3.5 i V6 4WD	12/01→12/06	143 / 194	Man		2405901	[+] 24059 16.6	→12/03	Man		82077200		
			Man		82072100				PRO	92146703	ø 315 x 20 x 86.4	
					92136500	ø 280 x 27 x 42.8				91068400	ø 190 x 40	
				PRO	92136503	ø 280 x 27 x 42.8				97036200		
				PRO	92180003	ø 303 x 28 x 43						

TIBURON (GK) 08/01→08/09 → COUPE (GK), Page 466

TIBURON (RD) 07/96→04/02 → COUPE (RD), Page 466

TIBURON Coupe 01/96→12/01

		301400	Sum		2172501	[+] 21725 17		Sum		2155301	[+] 21553 14	
2.0	01/96→12/01	102 / 139										
					92062700	ø 257 x 22 x 34	→1998-08-15		PRO	92117103	ø 258 x 10 x 40.3	
					92130800	ø 257 x 24 x 45	1998-08-16→					

TIBURON Coupe 01/06→12/08

		301500	Man		2389101	[+] 23891 16.9		Sum		2155301	[+] 23553 14	
1.6 CVVT	10/06→12/08	78 / 106										
2.0 CVVT	10/06→12/08	105 / 143		PRO	92133903	ø 280 x 26 x 47.4				82503400		
										92166700	ø 258 x 10 x 45.4	
		301600	Man		2389101	[+] 23891 16.9		Sum		2155301	[+] 23553 14	
2.7	01/06→12/08	123 / 167										
			Man		82071600					92166700	ø 258 x 10 x 45.4	
				PRO	92133903	ø 280 x 26 x 47.4				TPM0008		
					TPM0008							

TRAJET (FO) 03/00→07/08

		301700	Man		2356901	[+] 23569 17		Man		2354301	[+] 23543 15	⊕ ABS
2.0	03/00→07/08	100 / 136										
			Man		82072100			Man		82072300		⊕ ABS
					92131000	ø 276 x 26 x 47.2				91070600	ø 254 x 55	⊖ ABS
										92134000	ø 284 x 10.1 x 61.1	⊕ ABS
										94035700	ø 254,0 x 62.7	⊖ ABS
										91066400	ø 190 x 40	⊕ ABS
										97037700		⊕ ABS
		301800	Man		2356901	[+] 23569 17		Man		2354301	[+] 23543 15	⊕ ABS
2.0	03/01→10/03	103 / 140										
2.0	11/03→07/08	104 / 141										
2.0	01/04→07/08	103 / 140	Man		82072100			Man		82072300		
					92131000	ø 276 x 26 x 47.2						

→

		kW / hp									
TRAJET (FO) 03/00→07/08											
301800											
2.0	03/01→10/03	103 / 140						91070600	ø 254 x 55	⊖ ABS	
2.0	11/03→07/08	104 / 141						92134000	ø 284 x 10.1 x 61.1	⊕ ABS	
2.0	01/04→07/08	103 / 140						94035700	ø 254,0 x 62.7	⊖ ABS	
								91066400	ø 190 x 40	⊕ ABS	
								97037700		⊕ ABS	
301900			Man		2356901	[+] 23569 17		Man	2354301	[+] 23543 15	
2.0 CRDi	04/01→07/08	83 / 113									
2.0 CRDi	08/05→07/08	92 / 125	Man		82072100			Man	82072300		
2.7 V6	09/00→07/08	127 / 173			92131000	ø 276 x 26 x 47.2			92134000	ø 284 x 10.1 x 61.1	
									91066400	ø 190 x 40	
									97037700		
TUCSON (JM) 08/04→03/10											
302000			Man		2389101	[+] 23891 16.9		Man	2354301	[+] 23543 15	
2.0	08/04→03/10	104 / 141									
2.0 CRDi	08/04→03/10	83 / 113	Man		82071600			Ake	2493401	[+] 24934 15.5	Akebono
2.0 CRDi	01/06→03/10	100 / 136			92166500	ø 300 x 28 x 47.2	01/08→	Man	82072300		
2.0 CRDi	01/06→03/10	103 / 140							82074700		Akebono
2.0 CRDi	01/07→03/10	88 / 120		PRO	92133903	ø 280 x 26 x 47.4	→12/07		92156803	ø 262 x 10 x 61.2	
									91068500	ø 167 x 27.5	
									97036300		
302100			Man		2389101	[+] 23891 16.9		Man	2354301	[+] 23543 15	
2.0	01/10→03/10	105 / 143									
2.0 CRDi	01/09→03/10	110 / 150	Man		82071600			Ake	2493401	[+] 24934 15.5	Akebono
					92166500	ø 300 x 28 x 47.2		Man	82072300		
									82074700		Akebono
				PRO	92156803	ø 262 x 10 x 61.2					
									91068500	ø 167 x 27.5	
									97036300		
302200					2520501	[+] 25205 17.5	→2013-09	Man	2529201	[+] 25292 15.9	→2013-09
2.0	09/12→	123 / 167			82510900		→2013-09	Luc	82074100		→2013-09
					TPM0008		→2013-09		TPM0008		→2013-09
302300					2520501	[+] 25205 17.5	→2013-09	Man	2529201	[+] 25292 15.9	→2013-09
2.0	09/12→	125 / 170			82510900		→2013-09	Luc	82074100		→09.2013
					TPM0008		→2013-09		TPM0008		→2013-09
302400			Man		2389101	[+] 23891 16.9		Man	2354301	[+] 23543 15	
2.0 All-wheel Drive	08/04→03/10	104 / 141									
2.0 CRDi All-wheel Drive	08/04→03/10	83 / 113	Man		82071600			Ake	2493401	[+] 24934 15.5	Akebono
2.0 CRDi All-wheel Drive	01/06→03/10	103 / 140			92166500	ø 300 x 28 x 47.2	01/08→	Man	82072300		
2.0 CRDi All-wheel Drive	01/07→03/10	88 / 120							82074700		Akebono
2.7 All-wheel Drive	08/04→03/10	129 / 175		PRO	92133903	ø 280 x 26 x 47.4	→12/07		92134000	ø 284 x 10.1 x 61.1	
									91066400	ø 190 x 40	
									97037700		
302500			Man		2389101	[+] 23891 16.9		Man	2354301	[+] 23543 15	
2.0 CRDi All-wheel Drive	01/06→03/10	100 / 136									
			Man		82071600			Ake	2493401	[+] 24934 15.5	Akebono

F - H

		kW / hp											
TUCSON (JM) 08/04→03/10													
2.0 CRDi All-wheel Drive	01/06→03/10	302500 100 / 136			**92166500**	ø 300 x 28 x 47.2	01/08→	Man		**82072300**		
				PRO	**92133903**	ø 280 x 26 x 47.4	→12/07			**82074700**		Akebono
										92134000	ø 284 x 10.1 x 61.1	
										91066400	ø 190 x 40	
										97036300		
2.0 CRDi All-wheel Drive	01/09→03/10	302600 110 / 150	Man		**2389101**	[+] 23891 16.9		Man		**2354301**	[+] 23543 15	
			Man		**82071600**			Ake		**2493401**	[+] 24934 15.5	Akebono
					92166500	ø 300 x 28 x 47.2		Man		**82072300**		
										82074700		Akebono
										92134000	ø 284 x 10.1 x 61.1	
										91066400	ø 190 x 40	
										97037700		
2.4 AWD	09/11→	302700 131 / 178			**2520501**	[+] 25205 17.5	→2013-04	Man		**2529201**	[+] 25292 15.9	→2013-08
2.4 AWD	09/12→	129 / 175			**82510900**		→2013-08	Luc		**82074100**		→2013-08
					92166500	ø 300 x 28 x 47.2	→2013-08			**92134000**	ø 284 x 10.1 x 61.1	→2013-08
					TPM0008		→2013-08			**TPM0008**		→2013-08
										91078300	ø 190 x 40	→2013-08
2.7 4WD	09/05→12/09	302800 129 / 175	Man		**2389101**	[+] 23891 16.9	→2008-08	Man		**2354301**	[+] 23543 15	
			Man		**2389105**	[+] 23891 17.8	→2008-08	Ake		**2493401**	[+] 24934 15.5	
			Man		**82071600**		→2008-08	Man		**82072300**		
			Man		**82515800**		2008-08→			**92134000**	ø 284 x 10.1 x 61.1	
					92166500	ø 300 x 28 x 47.2	2008-08→			**TPM0008**		
					TPM0008					**91066400**	ø 190 x 40	
TUCSON (LM, EL, ELH) 08/09→ → ix35 (LM, EL, ELH), Page 475													
TUSCANI (GK) 08/01→08/09 → COUPE (GK), Page 466													
VELOSTER (FS) 03/11→													
1.6	06/11→	302900 94 / 128	Man		**82073000**			Man		**82074000**		
					TPM0008				PRO	**92240003**	ø 261.9 x 10 x 45.1	
										TPM0008		
1.6 GDI	03/11→	303000 103 / 140	Man		**82073000**		⊖ EU	Man		**82074000**		
				PRO	**92243103**	ø 280 x 23 x 44.4	⊕ EU		PRO	**92240003**	ø 261.9 x 10 x 45.1	
					TPM0008					**TPM0008**		
1.6 T-GDI	08/12→	303100 150 / 204	Sum		**2491501**	[+] 24915 17.3	Ø 300 mm	Man		**82074000**		
					92166200	ø 300 x 28 x 47.4			PRO	**92240003**	ø 261.9 x 10 x 45.1	
				PRO	**92243103**	ø 280 x 23 x 44.4				**TPM0008**		
					TPM0008							
1.6 T-GDI	10/12→	303200 137 / 186	Sum		**2491501**	[+] 24915 17.3			PRO	**92240003**	ø 261.9 x 10 x 45.1	
					92166200	ø 300 x 28 x 47.4				**TPM0008**		
					TPM0008							
VERACRUZ 01/07→ → ix55, Page 475													
VERNA III (MC) 11/05→11/10 → ACCENT III (MC), Page 463													
VERNA IV Stufenheck (RB) 11/10→ → ACCENT IV Saloon (RB), Page 463													

HYUNDAI HYUNDAI

30 kW / hp

VERNA Stufenheck (LC) 09/99→11/05 → ACCENT Saloon (LC), Page 463

VISTO 11/97→10/00

0.8	11/97→10/00	303300 38 / 52	Man		2323802	[+] 23238 16				91056800	ø 180 x 32
					92102800	ø 230 x 11 x 43.7					
					92146800	ø 234 x 18 x 50.8					

XG (XG) 12/98→12/05

200 3.0	06/03→05/05 10/01→05/05	303400 109 / 148 153 / 208	Man		2356901	[+] 23569 17		Man		2354301	[+] 23543 15
				PRO	92173203	ø 276 x 26 x 46			PRO	92156803	ø 262 x 10 x 61.2
					TPM0008					TPM0008	
250 30 300	12/98→12/05 12/98→12/05 09/99→09/03	303500 120 / 163 138 / 188 145 / 197	Man		2356901	[+] 23569 17		Man		2354301	[+] 23543 15
			Man		82072100			Man		82072300	
				PRO	92173203	ø 276 x 26 x 46			PRO	92156803	ø 262 x 10 x 61.2
350	10/02→12/05	303600 145 / 197	Man		2372601	[+] 23726 16.5		Man		2354301	[+] 23543 15
				PRO	92173203	ø 276 x 26 x 46		Man		82072300	
									PRO	92156803	ø 262 x 10 x 61.2

XG Saloon 09/00→12/01

3.0	09/00→12/01	303700 143 / 194	Man		2356901	[+] 23569 17		Man		2354301	[+] 23543 15
				PRO	92173203	ø 276 x 26 x 46			PRO	92156803	ø 262 x 10 x 61.2
					TPM0008					TPM0008	

XG Stufenheck 09/00→12/01 → XG Saloon, Page 485

HYUNDAI (BEIJING) HYUNDAI (BEIJING)

30 kW / hp

ELANTRA Saloon 12/03→

1.8	12/03→	303800 96 / 129	Ake		2403101	[+] 24031 16.8		Sum		2155301	[+] 21553 14
									PRO	92117103	ø 258 x 10 x 40.3

ELANTRA Stufenheck 12/03→ → ELANTRA Saloon, Page 485

SONATA (EF) 12/02→07/07

2.5	12/02→07/07	303900 121 / 162	Man		2389101	[+] 23891 16.9		Man		2354301	[+] 23543 15

TUCSON Closed Off-Road Vehicle 05/05→

2.7 All-wheel Drive	05/05→	304000 129 / 173	Man		2389101	[+] 23891 16.9		Man		2354301	[+] 23543 15
									PRO	92156803	ø 262 x 10 x 61.2

TUCSON Geländewagen geschlossen 05/05→ → TUCSON Closed Off-Road Vehicle, Page 485

HYUNDAI (HUATAI) HYUNDAI (HUATAI)

30 kW / hp

TERRACAN Closed Off-Road Vehicle 03/03→12/08

3.5 All-wheel Drive	03/03→12/08	304100 147 / 197						Man		2354301	[+] 23543 15

TERRACAN Geländewagen geschlossen 03/03→12/08
→ TERRACAN Closed Off-Road Vehicle, Page 485

F - H

		kW / hp											
EX 09/07→12/12													
304200			Sum		**2369803**	[+] 23698 17				**92149300**	ø 308 x 16 x 62.1	
25	04/10→	175 / 238										
37	09/12→	242 / 329							PRO	**92149303**	ø 308 x 16 x 62.1	
37 AWD	09/12→	242 / 329										
304300			Sum		**2369801**	[+] 23698 16		Ake		**2577801**	[+] 25778 13.8	
30d	04/10→	175 / 238								**92149300**	ø 308 x 16 x 62.1	
									PRO	**92149303**	ø 308 x 16 x 62.1	
304400			Ate		**2493001**	[+] 24930 16.4		Ake		**2387101**	[+] 23871 13.8	→2009-06
35	09/07→12/12	221 / 300						Ake		**2577801**	[+] 25778 13.8	2009-06→
										91074600	ø 170 x 40	→2009-05
304500			Ate		**2493001**	[+] 24930 16.4		Ake		**2577801**	[+] 25778 13.8	
35	10/08→	221 / 301								**92149300**	ø 308 x 16 x 62.1	
									PRO	**92149303**	ø 308 x 16 x 62.1	
304600			Sum		**2369801**	[+] 23698 16	⊖ RUS	Ake		**2577801**	[+] 25778 13.8	
37	10/08→	228 / 310					⊕ RUS 02/11→					
37	09/10→	235 / 320	Ate		**2493001**	[+] 24930 16.4	⊕ RUS →01/11			**92149300**	ø 308 x 16 x 62.1	⊖ RUS
									PRO	**92149303**	ø 308 x 16 x 62.1	⊖ RUS
FX 01/03→12/08													
304700			Sum		**2369801**	[+] 23698 16		Ake		**2387101**	[+] 23871 13.8	
35	02/03→12/08	206 / 280										
35 All-wheel Drive	01/03→12/08	206 / 280	Tok		**2405601**	[+] 24056 15.5		Ake		**82507600**		→02/04
45	02/03→12/08	232 / 316								**92149300**	ø 308 x 16 x 62.1	
45 All-wheel Drive	01/03→12/08	232 / 316							PRO	**92149303**	ø 308 x 16 x 62.1	
304800			Tok		**2405601**	[+] 24056 15.5		Ake		**2387101**	[+] 23871 13.8	
4.5 All-wheel Drive	09/05→12/08	239 / 325								**92149300**	ø 308 x 16 x 62.1	
									PRO	**92149303**	ø 308 x 16 x 62.1	
FX 09/08→12/11													
304900			Ake		**2499401**	[+] 24994 15.9		Ake		**2499501**	[+] 24995 13.8	
30d AWD	04/10→	175 / 238								**91073100**	ø 190 x 20	
50 AWD	06/13→	309 / 420										
305000			Tok		**2405601**	[+] 24056 15.5	→01/10	Ake		**2577801**	[+] 25778 13.8	→01/10
35 AWD	09/09→	226 / 307								**92149300**	ø 308 x 16 x 62.1	→01/10
									PRO	**92149303**	ø 308 x 16 x 62.1	→01/10
										91073100	ø 190 x 20	→01/10
305100			Tok		**2405601**	[+] 24056 15.5		Ake		**2387101**	[+] 23871 13.8	
35 AWD	01/12→	223 / 303								**92149300**	ø 308 x 16 x 62.1	
									PRO	**92149303**	ø 308 x 16 x 62.1	
305200			Ake		**2492001**	[+] 24920 15.6	→06/09	Ake		**2492101**	[+] 24921 13.5	→06/09
37 AWD	10/08→	235 / 320										
50 AWD	10/08→	287 / 390	Ake		**2499401**	[+] 24994 15.9	06/09→	Ake		**2499501**	[+] 24995 13.8	06/09→
										91073100	ø 190 x 20	
305300			Tok		**2405601**	[+] 24056 15.5	→2010-01	Ake		**2387101**	[+] 23871 13.8	→2009-08
FX	09/08→12/11	226 / 307						Ake		**2577801**	[+] 25778 13.8	2009-08→ →2010-01
										92149300	ø 308 x 16 x 62.1	→2010-01
									PRO	**92149303**	ø 308 x 16 x 62.1	→2010-01
										91073100	ø 190 x 20	→2010-01

		kW / hp											
FX 09/08→12/11													
305400			Ake		**2492001**	[+] 24920 15.6		Ake		**2499501**	[+] 24995 13.8	
FX	09/12→	242 / 329								**91073100**	ø 190 x 20	
305500			Ake		**2492001**	[+] 24920 15.6		Ake		**2492101**	[+] 24921 13.5	→2009-06
FX AWD	09/08→	291 / 395						Ake		**2499501**	[+] 24995 13.8	2009-06→
										91073100	ø 190 x 20	
G Cabriolet 09/10→ → G Convertible, Page 487												
G Convertible 09/10→												
305600			Sum		**2369803**	[+] 23698 17	⊖ rim size 19"	Ake		**2499501**	[+] 24995 13.8	19'' -brake
37	09/10→	235 / 320	Ake		**2499401**	[+] 24994 15.9	19'' -brake			**92149300**	ø 308 x 16 x 62.1	⊖ rim size 19"
									PRO	**92149303**	ø 308 x 16 x 62.1	⊖ rim size 19"
G Coupe 09/07→												
305700			Ate		**2493001**	[+] 24930 16.4		Ake		**2499501**	[+] 24995 13.8	
37	09/07→	243 / 330	Ake		**2499401**	[+] 24994 15.9						
G Saloon 10/02→												
305800			Sum		**2369801**	[+] 23698 16		Ake		**2387101**	[+] 23871 13.8	
35	10/02→	191 / 260			**92162400**	ø 320 x 28 x 49.2				**92149300**	ø 308 x 16 x 62.1	
									PRO	**92149303**	ø 308 x 16 x 62.1	
										91074600	ø 170 x 40	
G Saloon 09/07→12/12												
305900			Sum		**2369801**	[+] 23698 16				**92149300**	ø 308 x 16 x 62.1	
25	01/11→	163 / 222							PRO	**92149303**	ø 308 x 16 x 62.1	
37	01/12→	240 / 327										
306000			Sum		**2369803**	[+] 23698 17				**92149300**	ø 308 x 16 x 62.1	
25 X	09/10→12/12	162 / 220							PRO	**92149303**	ø 308 x 16 x 62.1	
306100			Sum		**2369801**	[+] 23698 16		Ake		**2387101**	[+] 23871 13.8	
35 X	09/07→12/08	228 / 310			**92162400**	ø 320 x 28 x 49.2				**92149300**	ø 308 x 16 x 62.1	
									PRO	**92149303**	ø 308 x 16 x 62.1	
										91074600	ø 170 x 40	
306200			Sum		**2369803**	[+] 23698 17		Ake		**2577801**	[+] 25778 13.8	→2010-01
37	09/08→	245 / 333								**92149300**	ø 308 x 16 x 62.1	
37 X	09/08→	245 / 333							PRO	**92149303**	ø 308 x 16 x 62.1	
										91074600	ø 170 x 40	→2009-05
306300			Ate		**2493001**	[+] 24930 16.4		Ake		**2499501**	[+] 24995 13.8	
37	10/08→	235 / 320										
37x	10/08→	235 / 320										
306400			Ate		**2493001**	[+] 24930 16.4		Ake		**2499501**	[+] 24995 13.8	
37	10/08→	243 / 330	Ake		**2499401**	[+] 24994 15.9						
G Stufenheck 10/02→ → G Saloon, Page 487												
G Stufenheck 09/07→12/12 → G Saloon, Page 487												
I30 01/97→												
306500			Sum		**2156101**	[+] 21561 17		Ake		**2171301**	[+] 21713 16.4	
3.0	01/97→	142 / 193		PRO	**92109403**	ø 280 x 28 x 49						
JX Closed Off-Road Vehicle 09/12→												
306600								Ake		**2487101**	[+] 24871 13.8	
3.5	09/12→	197 / 268										
3.5 AWD	09/12→	195 / 265								**91073100**	ø 190 x 20	

		kW / hp										
JX Geländewagen geschlossen 09/12→ → JX Closed Off-Road Vehicle, Page 487												
M (Y51) 03/10→												
306700			Sum		2369801	[+] 23698 16	06/10→			92149300	ø 308 x 16 x 62.1	
30d	03/10→	175 / 238										
37	03/10→	235 / 320	Sum		2369803	[+] 23698 17	→06/10		PRO	92149303	ø 308 x 16 x 62.1	
										91073100	ø 190 x 20	
306800			Sum		2369801	[+] 23698 16		Ake		2577801	[+] 25778 13.8	
35h	04/11→	225 / 306								92149300	ø 308 x 16 x 62.1	
									PRO	92149303	ø 308 x 16 x 62.1	
										91073100	ø 190 x 20	
306900			Sum		2369801	[+] 23698 16				92149300	ø 308 x 16 x 62.1	
37	01/12→	243 / 330										
56	03/10→	313 / 426							PRO	92149303	ø 308 x 16 x 62.1	
56	01/12→	309 / 420								91073100	ø 190 x 20	
M35 01/05→12/10												
307000			Sum		2369801	[+] 23698 16	2006-10→	Ake		2387101	[+] 23871 13.8	
3.5	01/05→	206 / 280										
			Tok		2405601	[+] 24056 15.5	→2006-10			92149300	ø 308 x 16 x 62.1	
			Sum		82507500		→2006-10		PRO	92149303	ø 308 x 16 x 62.1	
					92162400	ø 320 x 28 x 49.2				91074600	ø 170 x 40	
307100			Sum		2369801	[+] 23698 16	2006-10→ →2008-08	Ake		2387101	[+] 23871 13.8	2006-07→ →2008-08
3.5	09/05→12/08	209 / 284										
3.5 X	09/05→12/08	209 / 284	Tok		2405601	[+] 24056 15.5	2006-07→ →2006-10			92149300	ø 308 x 16 x 62.1	2006-07→ →2008-08
			Sum		82507500		2006-07→ →2006-10		PRO	92149303	ø 308 x 16 x 62.1	2006-07→ →2008-08
					92162400	ø 320 x 28 x 49.2	2006-07→ →2008-08			91074600	ø 170 x 40	2006-07→ →2008-08
307200			Sum		2369801	[+] 23698 16	→2009-10	Ake		2387101	[+] 23871 13.8	→2009-08
3.5	09/08→12/10	226 / 307										
3.5 X	09/08→12/10	226 / 307	Sum		2369803	[+] 23698 17	2009-10→	Ake		2577801	[+] 25778 13.8	2009-08→
			Sum		82507500		2009-10→			92149300	ø 308 x 16 x 62.1	
					92162400	ø 320 x 28 x 49.2			PRO	92149303	ø 308 x 16 x 62.1	
										91074600	ø 170 x 40	→2009-04
307300			Sum		2369803	[+] 23698 17				92149300	ø 308 x 16 x 62.1	
3.5 h	01/10→	268 / 364										
			Sum		82507500				PRO	92149303	ø 308 x 16 x 62.1	
					92162400	ø 320 x 28 x 49.2						
307400			Sum		2369801	[+] 23698 16	2006-10→	Ake		2387101	[+] 23871 13.8	→2008-01
3.5 X	01/05→	206 / 280										
			Tok		2405601	[+] 24056 15.5	→2006-10			92149300	ø 308 x 16 x 62.1	→2008-01
			Sum		82507500		→2006-10		PRO	92149303	ø 308 x 16 x 62.1	→2008-01
										91074600	ø 170 x 40	→2008-01
M37 01/10→												
307500			Sum		2369803	[+] 23698 17	⊖ 4-wheel steer.	Ake		2499501	[+] 24995 13.8	⊕ 4-wheel steer.
3.7	01/10→	243 / 330										
3.7 Allrad	01/10→	243 / 330	Ake		2499401	[+] 24994 15.9	⊕ 4-wheel steer.	Ake		2577801	[+] 25778 13.8	⊖ 4-wheel steer.
										92149300	ø 308 x 16 x 62.1	⊖ 4-wheel steer.
									PRO	92149303	ø 308 x 16 x 62.1	⊖ 4-wheel steer.
										91073100	ø 190 x 20	
M45 01/05→12/10												
307600			Tok		2405601	[+] 24056 15.5	→10/06	Sum		2369801	[+] 23698 16	11/06→
4.5	01/05→	250 / 340										
					92162400	ø 320 x 28 x 49.2		Ake		2387101	[+] 23871 13.8	

		kW / hp											
M45 01/05→12/10													
		307600											
4.5	01/05→	250 / 340								92149300	ø 308 x 16 x 62.1		
									PRO	92149303	ø 308 x 16 x 62.1		
		307700	Sum		2369801	[+] 23698 16	→2009-10		Ake	2387101	[+] 23871 13.8	→2009-08	
4.5	09/08→12/10	242 / 229											
4.5 X	09/08→12/10	242 / 329	Sum		2369803	[+] 23698 17	2009-10→		Ake	2577801	[+] 25778 13.8	2009-08→	
			Sum		82507500		2009-10→			92149300	ø 308 x 16 x 62.1		
					92162400	ø 320 x 28 x 49.2			PRO	92149303	ø 308 x 16 x 62.1		
		307800	Sum		2369801	[+] 23698 16			Ake	2387101	[+] 23871 13.8		
4.5 X	09/07→12/08	250 / 340											
					92162400	ø 320 x 28 x 49.2				92149300	ø 308 x 16 x 62.1		
									PRO	92149303	ø 308 x 16 x 62.1		
Q45 I 01/93→													
		307900	Tok		2318401	[+] 23184 14.5			Ake	2336701	[+] 23367 15		
4.1	01/93→	205 / 278											
			Tok		2318402	[+] 23184 14.5							
Q45 III (F50) 02/01→													
		308000							Ake	2336701	[+] 23367 15		
4.5	02/01→	250 / 340											
Q50 04/13→													
		308100								92149300	ø 308 x 16 x 62.1		
2.0 T	04/14→	155 / 211											
50	04/13→	245 / 333							PRO	92149303	ø 308 x 16 x 62.1		
50 AWD	04/13→	245 / 333											
50 D	04/13→	125 / 170								91073100	ø 190 x 20		
50 Hybrid	04/13→	268 / 364											
50 Hybrid AWD	04/13→	268 / 364											
		308200								92149300	ø 308 x 16 x 62.1	⊕ Premium	
Hybrid	04/13→	264 / 359											
Hybrid AWD	04/13→	264 / 359							PRO	92149303	ø 308 x 16 x 62.1	⊕ Premium	
										91073100	ø 190 x 20		
Q60 Coupe 10/13→													
		308300	Ake		2499401	[+] 24994 15.9			Ake	2499501	[+] 24995 13.8	⊕ Sport	
3.7	10/13→	242 / 329											
3.7	10/13→	246 / 335								92149300	ø 308 x 16 x 62.1		
3.7 AWD	10/13→	242 / 329											
3.7 AWD	10/13→	246 / 335							PRO	92149303	ø 308 x 16 x 62.1		
3.7 IPL	10/13→	256 / 348											
3.7 IPL	10/13→	260 / 354											
Q70 (Y51) 03/13→													
		308400	Ake		2499401	[+] 24994 15.9				92149300	ø 308 x 16 x 62.1		
3.0	03/13→	175 / 238											
3.7	03/13→	235 / 320							PRO	92149303	ø 308 x 16 x 62.1		
		308500								92149300	ø 308 x 16 x 62.1		
3.5 Hybrid	03/13→	225 / 306											
									PRO	92149303	ø 308 x 16 x 62.1		
		308600	Sum		2369801	[+] 23698 16				92149300	ø 308 x 16 x 62.1		
3.5 Hybrid	03/13→	268 / 364											
									PRO	92149303	ø 308 x 16 x 62.1		
		308700	Sum		2369801	[+] 23698 16	⊕ Base		Ake	2499501	[+] 24995 13.8	⊕ Sport	
3.7	10/13→	246 / 335											
3.7 AWD	10/13→	246 / 335	Ake		2499401	[+] 24994 15.9	⊕ Sport			91073100	ø 190 x 20		
5.6	09/13→	313 / 426											
5.6	07/14→	310 / 422											
5.6 AWD	09/13→	313 / 426											
5.6 AWD	07/14→	310 / 422											
QX4 01/97→													
		308800	Nis		2342001	[+] 23420 16.5	→10/02			91056200	ø 295 x 52	→10/02	
3.3	01/97→	125 / 170											
					92109500	ø 300 x 28 x 38	→10/02						
QX50 08/13→													
		308900	Sum		2369803	[+] 23698 17				92149300	ø 308 x 16 x 62.1		
30d AWD	08/13→	175 / 238											
37 AWD	08/13→	235 / 320							PRO	92149303	ø 308 x 16 x 62.1		

INFINITI

INFINITI

		kW / hp											
QX56 09/06→12/10													
309000									Bos	2411102	[+] 24111	17.1	2008-04→ →2010-03
5.6	09/07→12/10	239 / 324								2534001	[+] 25340	15	2010-03→
309100									Bos	2411102	[+] 24111	17.1	2008-04→
5.6 4WD	09/06→12/09	239 / 324											
QX56 01/10→12/10													
309200									Bos	2411102	[+] 24111	17.1	
56	01/10→12/10	298 / 405											
309300										2534001	[+] 25340	15	
56	01/12→	294 / 400											
56 AWD	03/10→	298 / 405											
QX60 04/12→													
309400									Ake	2487101	[+] 24871	13.8	
3.5	04/12→	195 / 265											
3.5 AWD	04/12→	195 / 265											
309500									Ake	2487101	[+] 24871	13.8	
3.5	09/13→	197 / 268											
3.5 AWD	09/13→	197 / 268								91073100	ø 190 x 20		
QX70 08/13→													
309600			Ake	2499401	[+] 24994	15.9			Ake	2499501	[+] 24995	13.8	
30d AWD	08/13→	175 / 238											
309700			Ake	2499401	[+] 24994	15.9			Ake	2499501	[+] 24995	13.8	
37 [RWD]	08/13→	242 / 329											
37 AWD	08/13→	242 / 329								91073100	ø 190 x 20		
309800			Ake	2492001	[+] 24920	15.6			Ake	2499501	[+] 24995	13.8	
50 AWD	08/13→	287 / 390											
QX80 09/13→													
309900										2534001	[+] 25340	15	
5.6	09/13→	298 / 405											

INOKOM

INOKOM

		kW / hp											
GETZ (TB) 09/06→													
310000			Ake	2101202	[+] 21012	14.8				91063300	ø 203.2 x 31	⊕ ABS	
1.4	09/06→	52 / 71		82501500						91074500	ø 180 x 32	⊖ ABS	
				92134100	ø 241 x 19 x 48	⊖ ABS				97031700		⊕ ABS	
				92144700	ø 256 x 19 x 48	⊕ ABS				97034300		⊖ ABS	
										94033300	ø 203,2 x 38.5	⊕ ABS	

ISUZU

ISUZU

		kW / hp											
ASCENDER 03/03→													
310100				2444801	[+] 24448	16.8				2444501	[+] 24445	16.9	
4.2 4WD	03/03→	217 / 295											
5.3 4WD	03/03→	224 / 305		92226200	ø 325 x 29 x 54								
D-MAX (8DH) 05/02→													
310200			Ake	2154302	[+] 21543	16.5	→05/03			91070500	ø 295 x 47		
2.5 D	10/02→	74 / 101	Ake	2437001	[+] 24370	16.1	06/03→						
				92075800	ø 257 x 22 x 36		→05/03						
310300			Ake	2437001	[+] 24370	16.1				91070500	ø 295 x 47		
2.5 D 4x4	05/02→	74 / 101											
				PRO 92174803	ø 280 x 27 x 40								
310400			Ake	2437001	[+] 24370	16.1	→06/08			91070500	ø 295 x 47		
2.5 DiTD	10/06→	100 / 136		2514901	[+] 25149	15.8	07/08→						
310500			Ake	2437001	[+] 24370	16.1	→06/08			91070500	ø 295 x 47		
2.5 DiTD 4x4	01/07→	100 / 136											
3.0 D 4x4	01/07→	120 / 163		2514901	[+] 25149	15.8	07/08→						

→

		kW / hp											
D-MAX (8DH) 05/02→													
		310500		PRO	92174803	ø 280 x 27 x 40							
2.5 DiTD 4x4	01/07→	100 / 136											
3.0 D 4x4	01/07→	120 / 163											
		310600								91070500	ø 295 x 47		
3.0 D	01/07→	120 / 163											
		310700	Ake		2437001	[+] 24370 16.1				91070500	ø 295 x 47		
3.0 DiTD	10/02→	96 / 131											
		310800	Ake		2154302	[+] 21543 16.5	→05/03			91070500	ø 295 x 47		
3.0 DiTD 4x4	05/02→	96 / 131	Ake		2437001	[+] 24370 16.1	06/03→						
					92075800	ø 257 x 22 x 36	→05/03						
				PRO	92174803	ø 280 x 27 x 40							
D-MAX 06/12→													
		310900			2514901	[+] 25149 15.8							
2.5 Ddi	06/12→	120 / 163											
2.5 Ddi 4WD	06/12→	120 / 163											
D-MAX Pickup (8DH) 05/02→ → D-MAX (8DH), Page 490													
D-MAX Pick-up (8DH) 05/02→ → D-MAX (8DH), Page 490													
KB Pick-up (TF_) 09/91→08/99 → TFR/TFS Pickup (TF_), Page 491													
MIDI Box (98000N) 06/88→													
		311000	Sum		2111501	[–] 21115 15.5				91034800	ø 254 x 52		
2.0	06/88→	61 / 83											
2.0 4WD	09/88→	61 / 83			92095700	ø 251 x 18 x 33.5				94015500	ø 254,0 x 61	⊕ lock.differ.	
2.2 D	01/89→	45 / 61											
2.2 D 4WD	09/88→	45 / 61								94016800	ø 254,0 x 61.5	⊖ lock.differ.	
2.4 TD	02/94→	56 / 76											
MIDI Bus (94000, 98000) 01/89→													
		311100	Sum		2111501	[–] 21115 15.5				91034800	ø 254 x 52		
2.0 (98000)	01/89→	61 / 83											
2.0 4WD (94000)	01/89→	61 / 83			92095700	ø 251 x 18 x 33.5				94015500	ø 254,0 x 61	⊕ lock.differ.	
2.0 TD (98000)	01/89→	51 / 69											
2.2 D (98000)	01/89→	45 / 61								94016800	ø 254,0 x 61.5	⊖ lock.differ.	
2.2 D 4WD (94000)	01/89→	45 / 61											
2.4 D (98000)	01/94→	56 / 76											
MIDI Kasten (98000N) 06/88→ → MIDI Box (98000N), Page 491													
MIDI Van (94000, 98000) 01/89→													
		311200	Sum		2111501	[–] 21115 15.5				91034800	ø 254 x 52		
2.0 (98000)	01/89→	61 / 83											
2.0 4WD (94000)	01/89→	61 / 83			92095700	ø 251 x 18 x 33.5				94015500	ø 254,0 x 61	⊕ lock.differ.	
2.0 TD (98000)	01/89→	51 / 69											
2.2 D (98000)	01/89→	45 / 61								94016800	ø 254,0 x 61.5	⊖ lock.differ.	
2.2 D 4WD (94000)	01/89→	45 / 61											
2.4 TD (98000)	01/94→	56 / 76											
MU (_U_) 06/98→08/02													
		311300	Ake		2184501	[+] 21845 16.5			Sum	2187503	[+] 21875 15.8		
3.0 All-wheel Drive 4x4 (UES73EW)	06/98→08/02	107 / 146											
3.2 4x4 (UES25)	06/98→08/02	158 / 215											
MU 7 Closed Off-Road Vehicle 01/13→													
		311400			2514901	[+] 25149 15.8							
3.0 TD	01/13→	120 / 163											
MU 7 Geländewagen geschlossen 01/13→ → MU 7 Closed Off-Road Vehicle, Page 491													
MU-X Closed Off-Road Vehicle 11/13→													
		311500			2514901	[+] 25149 15.8							
3.0 TD 4x4	11/13→	130 / 177											
MU-X Geländewagen geschlossen 11/13→ → MU-X Closed Off-Road Vehicle, Page 491													
RODEO (8DH) 05/02→ → D-MAX (8DH), Page 490													
TFR/TFS Pickup (TF_) 09/91→08/99													
		311600	Ake		2154302	[+] 21543 16.5							
2.8 D	09/91→08/99	74 / 101											
2.8 D All-wheel Drive	09/91→08/99	74 / 101			92075800	ø 257 x 22 x 36							
TFR/TFS Pick-up (TF_) 09/91→08/99 → TFR/TFS Pickup (TF_), Page 491													
TROOPER 04/00→													
		311700	Ake		2184501	[+] 21845 16.5			Sum	2187503	[+] 21875 15.8		
3.0 DTI	04/00→	118 / 160											
3.5 V6 24V	04/00→	158 / 215			92091400	ø 280 x 26 x 36	⊕ ABS		Sum	82033800			
										92091600	ø 313 x 18 x 80		
										91076200	ø 210 x 31		
TROOPER Geländewagen offen 04/00→ → TROOPER Open Off-Road Vehicle, Page 492													

ISUZU

ISUZU

			kW / hp											
TROOPER Open Off-Road Vehicle 04/00→														
		311800		Ake		**2184501**	[+] 21845 16.5		Sum		**2187503**	[+] 21875 15.8	
3.0 DTI	04/00→	118 / 160				**92091400**	ø 280 x 26 x 36	⊕ ABS	Sum		**82033800**		
3.5 V6 24V	04/00→	158 / 215									**92091600**	ø 313 x 18 x 80	
											91076200	ø 210 x 31	
VEHICROSS (_U_) 04/97→12/00														
		311900		Ake		**2184501**	[+] 21845 16.5		Sum		**2187503**	[+] 21875 15.8	
3.2 All-wheel Drive 4x4 (UGS25)	04/97→12/00	158 / 215											

IVECO

IVECO

			kW / hp											
DAILY II Box Body / Estate 02/95→05/99														
		312000		Bre		**2913901**	[+] 29139 18.3		Lkh		**91016100**	ø 254 x 70	
30-10	01/97→05/99	76 / 103											
30-10 C	01/97→05/99	76 / 103				**93084400**	ø 267 x 14.5 x 154						
30-10 C	01/97→05/99	76 / 103											
30-8 (14914111, 14914117, 14914211, 14914217, 14915111...)	09/98→05/99	62 / 84											
30-8 V (14914111, 14914117, 14914211, 14914217...)	09/98→05/99	62 / 84											
		312100		Bre		**2912112**	[o] 29121 20.3		Bre		**2912112**	[o] 29121 20.3	
35-10 (15034111, 15034204, 15034211, 15034215, 15034217...)	01/96→05/99	76 / 103				**98024800**	L300	→5912327			**98024800**	L300	→5912327
35-12	02/95→05/99	90 / 122				**98051200**	L295	5912328→			**98051200**	L295	5912328→
35-8 (14934104, 14934111, 14934204, 14934205, 14934211...)	09/98→05/99	62 / 84				**93095100**	ø 290 x 22 x 111		Bre		**82519900**		
											93089600	ø 289 x 22 x 84.5	
									Bre		**91059000**	ø 172 x 42	→axle 12947747
									Bre		**97035000**		
		312200		Per		**2913801**	[+] 29138 18		Bre		**2912113**	[+] 29121 20.3	
40-10 4x4 (15214104, 15214111, 15214117, 15215111)	01/97→05/99	76 / 103				**93042801**	ø 280 x 16 x 142				**98024800**	L300	→5912327
49-12 V (15154204, 15154211, 15154215, 15154217...)	05/96→05/99	90 / 122									**98051200**	L295	5912328→
											93089600	ø 289 x 22 x 84.5	
		312300		Wabco 450 F-I-brake		**2910701**	[+] 29107 20				**1709601**	17096 12.6	
59-12 V (15174404, 15174411, 15174415, 15174417)	05/96→05/99	90 / 122									**87001200** 7338 C Fe	ø 6 x L 12	52x
						93084500	ø 290 x 25 x 160				**87001201** 7338 C Cu	ø 6 x L 12	52x
DAILY II Bus 05/96→05/99														
		312400		Bre		**2914001**	[+] 29140 18.3		Bre		**2912113**	[+] 29121 20.3	
A 40-10 (95719111, 95719131, 95719311, 95719315...)	09/96→05/99	76 / 103				**93019400**	ø 267 x 14.2 x 111				**98024800**	L300	→5912327
A 45-10 (95739111, 95739131, 95739311, 95739317, 95739331)	05/96→05/99	76 / 103									**98051200**	L295	5912328→
											93089600	ø 289 x 22 x 84.5	
		312500		Per		**2913801**	[+] 29138 18		Bre		**2912113**	[+] 29121 20.3	
A 40-12 (95819311, 95819315, 95819317, 95819331)	05/96→05/99	90 / 122				**93042801**	ø 280 x 16 x 142				**98024800**	L300	→5912327
A 45-12 (95839211, 95839231, 95839311, 95839317...)	05/96→05/99	90 / 122									**98051200**	L295	5912328→
											93089600	ø 289 x 22 x 84.5	
DAILY II Dumptruck 05/96→05/99														
		312600		Bre		**2912112**	[o] 29121 20.3		Bre		**2912112**	[o] 29121 20.3	
35-10 K (15030111, 15030211, 15030311, 15031111...)	01/97→05/99	76 / 103				**98024800**	L300	→5912327			**98024800**	L300	→5912327
35-8 K (14930304, 14931104, 14931111, 14931115...)	09/98→05/99	62 / 84				**98051200**	L295	5912328→			**98051200**	L295	5912328→

→

		kW / hp											
DAILY II Dumptruck 05/96→05/99													
312600													
35-10 K (15030111, 15030211, 15030311, 15031111...)	01/97→05/99	76 / 103		**93095100**	ø 290 x 22 x 111		Bre	**82519900**			
35-8 K (14930304, 14931104, 14931111, 14931115...)	09/98→05/99	62 / 84						**93089600**	ø 289 x 22 x 84.5	
							Bre	**91059000**	ø 172 x 42	→axle 12947747
							Bre	**97035000**		
312700			Bre	**2914001**	[+] 29140 18.3		Bre	**2912113**	[+] 29121 20.3	
49-10 K (15056204, 15056211, 15056304, 15056311)	05/96→05/99	76 / 103		**93019400**	ø 267 x 14.2 x 111			**98024800**	L300	→5912327
								98051200	L295	5912328→
								93089600	ø 289 x 22 x 84.5	
312800			Per	**2913801**	[+] 29138 18			**91075600**	ø 260 x 80	
49-12 K	05/96→05/99	90 / 122		**93042801**	ø 280 x 16 x 142					
312900			Wab-co 450 F-I - brake	**2910701**	[+] 29107 20			**1709601**	17096 12.6	
59-12 K (15176211, 15176304, 15176311, 15176315...)	05/96→05/99	90 / 122						**87001200** 7338 C Fe	ø 6 x L 12	52x
				93084500	ø 290 x 25 x 160			**87001201** 7338 C Cu	ø 6 x L 12	52x
DAILY II Kasten/Kombi 02/95→05/99 → DAILY II Box Body / Estate, Page 492										
DAILY II Kipper 05/96→05/99 → DAILY II Dumptruck, Page 492										
DAILY II Platform/Chassis 01/96→05/99										
313000			Bre	**2913901**	[+] 29139 18.3		Lkh	**91016100**	ø 254 x 70	
30-10	01/98→05/99	76 / 103								
30-8 (10011131, 10011132, 10011231, 10011232, 10011237...)	09/98→05/99	62 / 84		**93084400**	ø 267 x 14.5 x 154			**97014200**		
30-8 (14911111, 14911117, 14911211, 14911215, 14911217...)	09/98→05/99	62 / 84								
313100			Bre	**2912112**	[o] 29121 20.3		Bre	**2912112**	[o] 29121 20.3	
35-10 (15030111, 15030211, 15030311, 15031111, 15031117...)	01/96→05/99	76 / 103		**98024800**	L300	→5912327		**98024800**	L300	→5912327
35-12 (15130311, 15130411, 15131111, 15131204, 15131211...)	05/96→05/99	90 / 122		**98051200**	L295	5912328→		**98051200**	L295	5912328→
35-8 (14930304, 14931104, 14931111, 14931115, 14931204...)	09/98→05/99	62 / 84		**93095100**	ø 290 x 22 x 111		Bre	**82519900**		
								93089600	ø 289 x 22 x 84.5	
							Bre	**91059000**	ø 172 x 42	→axle 12947747
							Bre	**97035000**		
313200			Per	**2913801**	[+] 29138 18		Bre	**2912113**	[+] 29121 20.3	
40-10 W 4x4	01/97→05/99	76 / 103								
49-12 (15150211, 15150311, 15150404, 15150411, 15151204...)	05/96→05/99	90 / 122		**93042801**	ø 280 x 16 x 142			**98024800**	L300	→5912327
								98051200	L295	5912328→
								93089600	ø 289 x 22 x 84.5	
313300			Bre	**2914001**	[+] 29140 18.3		Bre	**2912113**	[+] 29121 20.3	
49-10 (15050304, 15050404, 15050411, 15051204, 15051211...)	05/96→05/99	76 / 103		**93019400**	ø 267 x 14.2 x 111			**98024800**	L300	→5912327
								98051200	L295	5912328→
								93089600	ø 289 x 22 x 84.5	
313400			Wab-co 450 F-I - brake	**2910701**	[+] 29107 20			**1709601**	17096 12.6	
59-12 (15170211, 15170304, 15170311, 15170504, 15170511...)	05/96→05/99	90 / 122						**87001200** 7338 C Fe	ø 6 x L 12	52x
				93084500	ø 290 x 25 x 160			**87001201** 7338 C Cu	ø 6 x L 12	52x
DAILY II Pritsche/Fahrgestell 01/96→05/99 → DAILY II Platform/Chassis, Page 493										
DAILY III Box Body / Estate 11/97→07/07										
313500			Bre	**2913901**	[+] 29139 18.3		Lkh	**91016100**	ø 254 x 70	
2.8	11/97→07/07	76 / 103								
2.8	11/97→07/07	90 / 122		**93084400**	ø 267 x 14.5 x 154					

DAILY III Box Body / Estate 11/97→07/07

		kW / hp											
		313600	Bre		2912111	[o] 29121 17		Bre		2912303	[o] 29123 20.3	
29 L 10 V (ALJA43A2, ALJA42A2, ALJA41A2)	09/02→	70 / 95										
29 L 11 V	05/99→	78 / 106			98024800	L300	→5912327			82061700		
29 L 12 V (ALKA41A2, ALLA52A2, ALKA42A2)	09/02→	85 / 116			98051200	L295	5912328→			93104700	ø 276 x 16 x 69.5	⊖ ABS
29 L 13	05/01→	92 / 125	Bre		82519900					93104800	ø 276 x 16 x 69.5	⊕ ABS
29 L 14	01/05→04/06	100 / 136			93104600	ø 276 x 22 x 72.5						
29 L 9 V	05/99→	62 / 84										
29 L 9 V	11/01→04/06	66 / 90										
		313700	Bre		2912111	[o] 29121 17	⊕ S-Model	Bre		2912112	[o] 29121 20.3	⊕ C-Model
35 C 12 V, 35 S 12 V (AGKA43A2, AGKB43A2, AGKB46A2...)	09/02→	85 / 116	Bre		2912112	[o] 29121 20.3	⊕ C-Model	Bre		2912303	[o] 29123 20.3	⊕ S-Model
35 S 15 V, 35 C 15 V (A6HCV3B2, A6HBV4B2, A6HC41B2...)	11/02→	107 / 146			98024800	L300	→5912327			98024800	L300	⊕ C-Model →5912327
					98051200	L295	5912328→			98051200	L295	⊕ C-Model 5912328→
			Bre		82519900					82061700		⊕ S-Model
					93095100	ø 290 x 22 x 111	⊕ C-Model →05/04			93089600	ø 289 x 22 x 84.5	⊕ C-Model
					93104600	ø 276 x 22 x 72.5	⊕ S-Model			93104700	ø 276 x 16 x 69.5	⊕ S-Model ⊖ ABS
					93175400	ø 290 x 22 x 111	06/04→			93104800	ø 276 x 16 x 69.5	⊕ S-Model ⊕ ABS
								Bre		91059000	ø 172 x 42	→axle 12947747
								Bre		97035000		
		313800	Bre		2912112	[o] 29121 20.3		Bre		2912112	[o] 29121 20.3	
35 C 14	09/04→04/06	100 / 136			98024800	L300	→5912327			98024800	L300	→5912327
					98051200	L295	5912328→			98051200	L295	5912328→
			Bre		82519900					93089600	ø 289 x 22 x 84.5	
					93095100	ø 290 x 22 x 111		Bre		91059000	ø 172 x 42	→axle 12947747
								Bre		97035000		
		313900	Bre		2912111	[o] 29121 17	⊕ S-Model	Bre		2912112	[o] 29121 20.3	⊕ C-Model
35 C 14, 35 S 14	01/05→04/06	100 / 136	Bre		2912112	[o] 29121 20.3	⊕ C-Model	Bre		2912303	[o] 29123 20.3	⊕ S-Model
35 C 17, 35 S 17	01/05→04/06	122 / 166			98024800	L300	→5912327			98024800	L300	⊕ C-Model →5912327
40 C 17, 40 S 17	01/05→04/06	122 / 166			98051200	L295	5912328→			98051200	L295	⊕ C-Model 5912328→
			Bre		82519900					82061700		⊕ S-Model
					93175400	ø 290 x 22 x 111				93089600	ø 289 x 22 x 84.5	⊕ C-Model
										93104700	ø 276 x 16 x 69.5	⊕ S-Model ⊖ ABS
										93104800	ø 276 x 16 x 69.5	⊕ S-Model ⊕ ABS
								Bre		91059000	ø 172 x 42	→axle 12947747
								Bre		97035000		
		314000	Bre		2912111	[o] 29121 17		Bre		2912303	[o] 29123 20.3	
35 S 10 (ANJA41A1, ANJA42A2, ANJA42AB, ANJA43A, ANJAV1A...)	09/02→	70 / 95			98024800	L300	→5912327			82061700		
					98051200	L295	5912328→			93104700	ø 276 x 16 x 69.5	⊖ ABS
			Bre		82519900					93104800	ø 276 x 16 x 69.5	⊕ ABS
					93104600	ø 276 x 22 x 72.5		Bre		91059000	ø 172 x 42	→axle 12947747
					93175400	ø 290 x 22 x 111	06/04→	Bre		97035000		
		314100	Bre		2912111	[o] 29121 17	⊕ S-Model	Bre		2912112	[o] 29121 20.3	⊕ C-Model
35 S 11 V,35 C 11 V	05/99→	78 / 106										
35 S 13 V,35 C 13 V	05/99→	92 / 125	Bre		2912112	[o] 29121 20.3	⊕ C-Model	Bre		2912303	[o] 29123 20.3	⊕ S-Model
35 S 9 V,35 C 9 V	05/99→	62 / 84			98024800	L300	→5912327			98024800	L300	⊕ C-Model →5912327

		kW / hp									
DAILY III Box Body / Estate 11/97→07/07											
		314100		98051200	L295	5912328→		98051200	L295	⊕ C-Model 5912328→
35 S 11 V,35 C 11 V	05/99→	78 / 106	Bre	82519900				82061700		⊕ S-Model
35 S 13 V,35 C 13 V	05/99→	92 / 125		93095100	ø 290 x 22 x 111	⊕ C-Model →05/04		93089600	ø 289 x 22 x 84.5	⊕ C-Model
35 S 9 V,35 C 9 V	05/99→	62 / 84		93104600	ø 276 x 22 x 72.5	⊕ S-Model →05/04		93104700	ø 276 x 16 x 69.5	⊕ S-Model ⊖ ABS
				93175400	ø 290 x 22 x 111	06/04→		93104800	ø 276 x 16 x 69.5	⊕ S-Model ⊕ ABS
							Bre	91059000	ø 172 x 42	→axle 12947747
							Bre	97035000		
		314200	Bre	2912111	[o] 29121 17		Bre	2912303	[o] 29123 20.3	
35 S 9 V	11/01→04/06	66 / 90		98024800	L300	→5912327		82061700		
				98051200	L295	5912328→		93104700	ø 276 x 16 x 69.5	⊖ ABS
			Bre	82519900				93104800	ø 276 x 16 x 69.5	⊕ ABS
				93104600	ø 276 x 22 x 72.5		Bre	91059000	ø 172 x 42	→axle 12947747
							Bre	97035000		
		314300	Bre	2912112	[o] 29121 20.3		Bre	2912112	[o] 29121 20.3	
40 C 13	05/99→04/06	92 / 125		98024800	L300	→5912327		98024800	L300	→5912327
40 C 14	09/04→04/06	100 / 136		98051200	L295	5912328→		98051200	L295	5912328→
40 C 14	01/05→04/06	100 / 136	Bre	82519900				93089600	ø 289 x 22 x 84.5	
40 C 15	11/01→04/06	107 / 146		93095100	ø 290 x 22 x 111					
45 C 14	07/99→04/06	100 / 136								
50 C 11	05/99→	78 / 106								
50 C 13	05/99→	92 / 125								
50 C 14	09/04→04/06	100 / 136								
50 C 15	01/01→04/06	107 / 146								
		314400	Bre	2912112	[o] 29121 20.3		Bre	2912112	[o] 29121 20.3	
50 C 17	09/04→04/06	122 / 166		98024800	L300	→5912327		98024800	L300	→5912327
				98051200	L295	5912328→		98051200	L295	5912328→
			Bre	82519900				93089600	ø 289 x 22 x 84.5	
				93175400	ø 290 x 22 x 111					
		314500	Brembo PF 2.52 - brake	2916002	[o] 29160 19.9		Bre	2912112	[o] 29121 20.3	
65 C 14	09/04→04/06	100 / 136						98024800	L300	→5912327
65 C 15	11/01→04/06	107 / 146		98024800	L300	→5912327		98051200	L295	5912328→
65 C 17	09/04→04/06	122 / 166		98051200	L295	5912328→		93127300	ø 306 x 22 x 136.5	
			Bre	82519900				91074900	ø 190 x 42	
				93127200	ø 290 x 26 x 53					
DAILY III Kasten/Kombi 11/97→07/07 → DAILY III Box Body / Estate, Page 493										
DAILY III Platform/Chassis 05/99→04/06										
		314600	Bre	2912111	[o] 29121 17		Bre	2912303	[o] 29123 20.3	
29 L 10 (ALJAV1A1, ALJA41AA, ALJA41A1, AHJA64A1...)	09/02→	70 / 95		98024800	L300	→5912327		82061700		
29 L 11	05/99→	78 / 105		98051200	L295	5912328→		93104700	ø 276 x 16 x 69.5	⊖ ABS
29 L 12 (ALKA41A1, AHKA64A1, ALLA51A1)	09/02→	85 / 116	Bre	82519900				93104800	ø 276 x 16 x 69.5	⊕ ABS
29 L 13	11/01→	92 / 125		93104600	ø 276 x 22 x 72.5					
29 L 14 (AHRA11C1B1, AHRA14C1B1, AHRA64C1B1)	11/05→	100 / 136								
29 L 9	05/99→	62 / 84								
29 L 9	11/01→04/06	66 / 90								
		314700	Bre	2912111	[o] 29121 17	⊕ S-Model	Bre	2912112	[o] 29121 20.3	⊕ C-Model
35 C 10 V , 35 S 10 V (AMJA11A1, AMJA14A1, AMJA64A1...)	09/02→	70 / 95	Bre	2912112	[o] 29121 20.3	⊕ C-Model	Bre	2912303	[o] 29123 20.3	⊕ S-Model
35 C 12 , 35 S 12 (AEKA14A1, AEKA14AA, AEKA64A1...)	09/02→	85 / 116		98024800	L300	→5912327		98024800	L300	⊕ C-Model →5912327
35 C 9, 35 S 9	11/01→04/06	66 / 90		98051200	L295	5912328→		98051200	L295	⊕ C-Model 5912328→
35 S 11,35 C 11 (A2FC13AA, A6FBU4AB, A2NB14A1, A2ND13A1...)	05/99→	78 / 106	Bre	82519900				82061700		⊕ S-Model
35 S 13,35 C 13	05/99→	92 / 125								
35 S 9,35 C 9	05/99→	62 / 84								

		kW / hp										
DAILY III Platform/Chassis 05/99→04/06												
314700				93095100	ø 290 x 22 x 111	⊕ C-Model →05/04		93089600	ø 289 x 22 x 84.5	⊕ C-Model
35 C 10 V , 35 S 10 V (AMJA11A1, AMJA14A1, AMJA64A1...)	09/02→	70 / 95		93104600	ø 276 x 22 x 72.5	⊕ S-Model →05/04		93104700	ø 276 x 16 x 69.5	⊕ S-Model ⊖ ABS
35 C 12 , 35 S 12 (AEKA14A1, AEKA14AA, AEKA64A1...)	09/02→	85 / 116		93175400	ø 290 x 22 x 111	06/04→		93104800	ø 276 x 16 x 69.5	⊕ S-Model ⊕ ABS
35 C 9, 35 S 9	11/01→04/06	66 / 90					Bre	91059000	ø 172 x 42	→axle 12947747
35 S 11,35 C 11 (A2FC13AA, A6FBU4AB, A2NB14A1, A2ND13A1...)	05/99→	78 / 106					Bre	97035000		
35 S 13,35 C 13	05/99→	92 / 125								
35 S 9,35 C 9	05/99→	62 / 84								
314800			Bre	2912112	[o] 29121 20.3		Bre	2912112	[o] 29121 20.3	
35 C 14	09/04→04/06	100 / 136								
35 C 15	11/01→	107 / 146		98024800	L300	→5912327		98024800	L300	→5912327
				98051200	L295	5912328→		98051200	L295	5912328→
			Bre	82519900				93089600	ø 289 x 22 x 84.5	
				93095100	ø 290 x 22 x 111		Bre	91059000	ø 172 x 42	→axle 12947747
							Bre	97035000		
314900			Bre	2912111	[o] 29121 17	⊕ S-Model	Bre	2912112	[o] 29121 20.3	⊕ C-Model
35 C 14, 35 S 14	01/05→04/06	100 / 136								
35 C 17, 35 S 17	01/05→04/06	122 / 166	Bre	2912112	[o] 29121 20.3	⊕ C-Model	Bre	2912303	[o] 29123 20.3	⊕ S-Model
40 C 17, 40 S 17	01/05→04/06	122 / 166								
				98024800	L300	→5912327		98024800	L300	⊕ C-Model →5912327
				98051200	L295	5912328→		98051200	L295	⊕ C-Model 5912328→
			Bre	82519900				82061700		⊕ S-Model
				93175400	ø 290 x 22 x 111			93089600	ø 289 x 22 x 84.5	⊕ C-Model
								93104700	ø 276 x 16 x 69.5	⊕ S-Model ⊖ ABS
								93104800	ø 276 x 16 x 69.5	⊕ S-Model ⊕ ABS
							Bre	91059000	ø 172 x 42	→axle 12947747
							Bre	97035000		
315000			Bre	2912112	[o] 29121 20.3		Bre	2912112	[o] 29121 20.3	
40 C 13	05/99→04/06	92 / 125								
40 C 14	09/04→04/06	100 / 136								
40 C 14	01/05→04/06	100 / 136		98024800	L300	→5912327		98024800	L300	→5912327
40 C 15	11/01→04/06	107 / 146								
50 C 11	05/99→	78 / 106		98051200	L295	5912328→		98051200	L295	5912328→
50 C 13	05/99→	92 / 125								
50 C 14	09/04→04/06	100 / 136								
50 C 15	01/01→	107 / 146	Bre	82519900				93089600	ø 289 x 22 x 84.5	
50 C 17	09/04→04/06	122 / 166								
				93095100	ø 290 x 22 x 111					
315100			Brembo PF 2.52 - brake	2916002	[o] 29160 19.9		Bre	2912112	[o] 29121 20.3	
65 C 13	07/99→	103 / 140								
65 C 14	09/04→04/06	100 / 136						98024800	L300	→5912327
65 C 15	11/01→	107 / 146								
65 C 17	09/04→04/06	122 / 166		98024800	L300	→5912327		98051200	L295	5912328→
				98051200	L295	5912328→		93127300	ø 306 x 22 x 136.5	
			Bre	82519900				91074900	ø 190 x 42	
				93127200	ø 290 x 26 x 53					
DAILY III Pritsche/Fahrgestell 05/99→04/06 → DAILY III Platform/Chassis, Page 495										
DAILY IV Box Body / Estate 05/06→										
315200			Bre	2922901	[o] 29229 21.4		Bre	2912303	[o] 29123 20.3	
29L10 V	05/06→	70 / 95								
29L12 V, 29L12 V/P	05/06→	85 / 116		98040700	L130			82061700		
29L14 C, 29L14 C/P, 29L14 V, 29L14 V/P	05/06→	100 / 136								
				92155900	ø 300 x 28 x 74.4			93177500	ø 296 x 16 x 69	⊕ ABS
								93229100	ø 296 x 16 x 69	⊖ ABS
								93175300	ø 294 x 24 x 83.5	⊖ ABS
315300			Bre	2922901	[o] 29229 21.4		Bre	2912303	[o] 29123 20.3	⊕ S-Model
35C10, 35S10	05/06→	70 / 95								
35C13 V, 35C13 V/P, 35S13 V, 35S13 V/P	07/07→	93 / 126		98040700	L130		Bre	2923201	[o] 29232 21	⊕ C-Model

DAILY IV Box Body / Estate 05/06→

		kW / hp											
35C14 GV, 35C14 GV/P, 35S14 GV, 35S14 GV/P	07/07→	100 / 136			**92155700**	ø 290 x 28 x 46					**98040900**	L250	⊕ C-Model
35C17 V, 35C17 V/P, 35S17 V, 35S17 V/P	07/07→	125 / 170									**82061700**		⊕ S-Model
35C18 V, 35C18 V/P, 35S18 V, 35S18 V/P	05/06→	130 / 176									**93177500**	ø 296 x 16 x 69	⊕ ABS
											93229100	ø 296 x 16 x 69	⊖ ABS
											92171700	ø 294 x 24 x 87.6	⊕ ABS
											93175300	ø 294 x 24 x 83.5	⊖ ABS
		315400	Bre		**2922901**	[o] 29229 21.4		Bre		**2912303**	[o] 29123 20.3	⊕ S-Model
35C11 V, 35S11 V	07/07→	78 / 106											
35C12 V, 35C12 V/P, 35S12 V, 35S12 V/P	05/06→	85 / 116			**98040700**	L130		Bre		**2923201**	[o] 29232 21	⊕ C-Model
35C14 V, 35C14 V/P, 35S14 V, 35S14 V/P	07/07→	103 / 140			**98051100**	L120	5912328→ D472694→			**98040900**	L250	⊕ C-Model
35S14 C, 35S14 C/P, 35S14 V, 35S14 V/P, 35C14 V, 35C14 V/P	05/06→	100 / 136			**92155700**	ø 290 x 28 x 46				**82061700**		⊕ S-Model
										93177500	ø 296 x 16 x 69	⊕ ABS
										93229100	ø 296 x 16 x 69	⊖ ABS
										92171700	ø 294 x 24 x 87.6	⊕ ABS
										93175300	ø 294 x 24 x 83.5	⊖ ABS
		315500	Bre		**2922901**	[o] 29229 21.4		Bre		**2923201**	[o] 29232 21	
35C15 V, 35C15 V/P	05/06→	107 / 146											
40C10 V	05/06→	70 / 95			**98040700**	L130				**98040900**	L250	
40C11 V	07/07→	78 / 106											
40C12 V, 40C14 V/P	05/06→	85 / 116											
40C13 V, 40C13 V/P	07/07→	93 / 126			**92155700**	ø 290 x 28 x 46				**93177500**	ø 296 x 16 x 69	⊕ ABS
40C14 GV, 40C14 GV/P	07/07→	100 / 136											
40C14 V, 40C14 V/P	07/07→	103 / 140								**93229100**	ø 296 x 16 x 69	⊖ ABS
40C15 V, 40C15 V/P	05/06→	107 / 146											
40C17 V, 40C17 V/P	07/07→	125 / 170								**92171700**	ø 294 x 24 x 87.6	⊕ ABS
40C18 V, 40C18 V/P	05/06→	130 / 176											
45C15 V	05/06→	107 / 146								**93175300**	ø 294 x 24 x 83.5	⊖ ABS
45C17 V, 45C17 V/P	07/07→	125 / 170											
45C18	05/06→	130 / 176											
50C14 GV, 50C14 GV/P	07/07→	100 / 136											
50C14 V, 50C14 V/P	07/07→	103 / 140											
50C15 V, 50C15 V/P	05/06→	107 / 146											
50C17 V, 50C17 V/P	07/07→	125 / 170											
60C17 V, 60C17 V/P	07/07→	125 / 170											
65C14 V, 65C14 V/P	07/07→	103 / 140											
65C17 V, 65C17 V/P	07/07→	125 / 170											
70C14 V, 70C14 V/P	07/07→	103 / 140											
70C17V, 70C17 V/P	07/07→	125 / 170											
		315600	Bre		**2922901**	[o] 29229 21.4		Bre		**2912303**	[o] 29123 20.3	
35S15	06/06→	110 / 150											
					98040700	L130				**82061700**		
					92155700	ø 290 x 28 x 46				**93177500**	ø 296 x 16 x 69	⊕ ABS
										93229100	ø 296 x 16 x 69	⊖ ABS
										92171700	ø 294 x 24 x 87.6	⊕ ABS
										93175300	ø 294 x 24 x 83.5	⊖ ABS
		315700	Bre		**2922901**	[o] 29229 21.4		Bre		**2912112**	[o] 29121 20.3	
50C18 V, 50C18 V/P	05/06→	130 / 176											
					98040700	L130				**98042200**		
					92155700	ø 290 x 28 x 46		Bre		**82519900**		
										93089600	ø 289 x 22 x 84.5	
								Bre		**91059000**	ø 172 x 42	→axle 12947747
		315800	Bre		**2922901**	[o] 29229 21.4		Bre		**2923201**	[o] 29232 21	
60C15 V	05/06→	107 / 146											
60C18	05/06→	130 / 176			**98040700**	L130				**98040900**	L250	
65C15	05/06→	107 / 146											
65C18	05/06→	130 / 176			**92155700**	ø 290 x 28 x 46				**93177500**	ø 296 x 16 x 69	⊕ ABS
										93229100	ø 296 x 16 x 69	⊖ ABS
										92171700	ø 294 x 24 x 87.6	⊕ ABS
										93175300	ø 294 x 24 x 83.5	⊖ ABS

		kW / hp										
DAILY IV Box Body / Estate 05/06→												
		315800										
60C15 V	05/06→	107 / 146										
60C18	05/06→	130 / 176										
65C15	05/06→	107 / 146										
65C18	05/06→	130 / 176										
										93177700	ø 306 x 28 x 132	
									PRO	93177703	ø 306 x 28 x 132	
DAILY IV Bus 05/06→												
		315900	Bre		2922901	[o] 29229 21.4		Bre		2912303	[o] 29123 20.3	
35S14, 35S14 /P	05/06→	100 / 136										
35S14 G	07/09→	100 / 136			98040700	L130				82061700		
					98051100	L120	5912328→ D472694→			93177500	ø 296 x 16 x 69	⊕ ABS
					92155700	ø 290 x 28 x 46				93229100	ø 296 x 16 x 69	⊖ ABS
										92171700	ø 294 x 24 x 87.6	⊕ ABS
DAILY IV Dumptruck 05/06→												
		316000	Bre		2922901	[o] 29229 21.4		Bre		2923201	[o] 29232 21	
35C10 K	05/06→	70 / 95			98040700	L130				98040900	L250	
35C15	05/06→	107 / 146			92155700	ø 290 x 28 x 46				93177500	ø 296 x 16 x 69	⊕ ABS
35C18	05/06→	130 / 176								93229100	ø 296 x 16 x 69	⊖ ABS
40C14 K, 40C14 DK	07/07→	103 / 140								92171700	ø 294 x 24 x 87.6	⊕ ABS
40C17 K, 40C17 DK	07/07→	125 / 170								93175300	ø 294 x 24 x 83.5	⊖ ABS
50C14 K, 50C14 DK	07/07→	103 / 140										
50C15	05/06→	107 / 146										
50C17 K, 50C17 DK	07/07→	125 / 170										
60C14 K, 60C14 DK	07/07→	103 / 140										
60C17 K, 60C17 DK	07/07→	125 / 170										
65C14 K, 65C14 DK	07/07→	103 / 140										
65C17 K, 65C17 DK, 65C17KK	07/07→	125 / 170										
70C14 K, 70C14 DK, 70C14 KK	07/07→	103 / 140										
70C17 K, 70C17 DK, 70C17 KK	07/07→	125 / 170										
		316100	Bre		2922901	[o] 29229 21.4		Bre		2912303	[o] 29123 20.3	⊕ S-Model
35C11 K, 35C11 DK, 35S11 K, 35S11 DK	07/07→	78 / 106						Bre		2923201	[o] 29232 21	⊕ C-Model
35C14 K, 35C14 DK, 35S14 K, 35S14 DK	07/07→	103 / 140			98040700	L130				98040900	L250	⊕ C-Model
					98051100	L120	5912328→ D472694→			82061700		⊕ S-Model
					92155700	ø 290 x 28 x 46				93177500	ø 296 x 16 x 69	⊕ ABS
										93229100	ø 296 x 16 x 69	⊖ ABS
										92171700	ø 294 x 24 x 87.6	⊕ ABS
		316200	Bre		2922901	[o] 29229 21.4		Bre		2923201	[o] 29232 21	
35C12	05/06→	85 / 116			98040700	L130				98040900	L250	
					98051100	L120	5912328→ D472694→			93177500	ø 296 x 16 x 69	⊕ ABS
					92155700	ø 290 x 28 x 46				93229100	ø 296 x 16 x 69	⊖ ABS
										92171700	ø 294 x 24 x 87.6	⊕ ABS
										93175300	ø 294 x 24 x 83.5	⊖ ABS
		316300	Bre		2922901	[o] 29229 21.4		Bre		2912303	[o] 29123 20.3	⊕ S-Model
35C13 K, 35C13 DK, 35S13 K, 35S13 DK	07/07→	93 / 126						Bre		2923201	[o] 29232 21	⊕ C-Model
35C17 K, 35C17 DK, 35S17 K, 35S17 DK	07/07→	125 / 170			98040700	L130				98040900	L250	⊕ C-Model
					92155700	ø 290 x 28 x 46				82061700		⊕ S-Model
										93177500	ø 296 x 16 x 69	⊕ ABS
										93229100	ø 296 x 16 x 69	⊖ ABS
										92171700	ø 294 x 24 x 87.6	⊕ ABS
		316400	Bre		2922901	[o] 29229 21.4		Bre		2912303	[o] 29123 20.3	
35S14 K, 35S14 DK	07/07→	100 / 136			98040700	L130				82061700		
					98051100	L120	5912328→ D472694→			93177500	ø 296 x 16 x 69	⊕ ABS
					92155700	ø 290 x 28 x 46				93229100	ø 296 x 16 x 69	⊖ ABS

		kW / hp									
DAILY IV Dumptruck 05/06→											
		316400									
35S14 K, 35S14 DK	07/07→	100 / 136							92171700	ø 294 x 24 x 87.6	⊕ ABS
		316500	Bre		2922901	[o] 29229 21.4		Bre	2912112	[o] 29121 20.3	
50C18	05/06→	130 / 176			98040700	L130			98042200		
					92155700	ø 290 x 28 x 46		Bre	82519900		
									93089600	ø 289 x 22 x 84.5	
								Bre	91059000	ø 172 x 42	→axle 12947747
		316600	Bre		2922901	[o] 29229 21.4		Bre	2923201	[o] 29232 21	
60C15	05/06→	107 / 146			98040700	L130			98040900	L250	
60C18	05/06→	130 / 176			92155700	ø 290 x 28 x 46			93177500	ø 296 x 16 x 69	⊕ ABS
									93229100	ø 296 x 16 x 69	⊖ ABS
									92171700	ø 294 x 24 x 87.6	⊕ ABS
									93175300	ø 294 x 24 x 83.5	⊖ ABS
									93177700	ø 306 x 28 x 132	
								PRO	93177703	ø 306 x 28 x 132	
DAILY IV Kasten/Kombi 05/06→ → DAILY IV Box Body / Estate, Page 496											
DAILY IV Kipper 05/06→ → DAILY IV Dumptruck, Page 498											
DAILY IV Platform/Chassis 05/06→											
		316700	Bre		2922901	[o] 29229 21.4		Bre	2912303	[o] 29123 20.3	
29L10	05/06→	70 / 95			98040700	L130			82061700		
29L12	05/06→	85 / 116			92155900	ø 300 x 28 x 74.4			93177500	ø 296 x 16 x 69	⊕ ABS
29L14	05/06→	100 / 136							93229100	ø 296 x 16 x 69	⊖ ABS
35S17 W, 35S17 WD	07/07→	125 / 170							93175300	ø 294 x 24 x 83.5	⊖ ABS
55S17 W, 55S17 WD	07/07→	125 / 170									
		316800	Bre		2922901	[o] 29229 21.4		Bre	2912303	[o] 29123 20.3	⊕ S-Model
35C10, 35S10	05/06→	70 / 95									
35C13, 35C13 /P, 35S13 D, 35S13, 35S13 /P	07/07→	93 / 126			98040700	L130		Bre	2923201	[o] 29232 21	⊕ C-Model
35C17, 35C17 /P, 35S17, 35S17 /P, 35S17 D	07/07→	125 / 170			92155700	ø 290 x 28 x 46			98040900	L250	⊕ C-Model
35C18, 35S18	05/06→	130 / 176							82061700		⊕ S-Model
									93177500	ø 296 x 16 x 69	⊕ ABS
									93229100	ø 296 x 16 x 69	⊖ ABS
									92171700	ø 294 x 24 x 87.6	⊕ ABS
									93175300	ø 294 x 24 x 83.5	⊖ ABS
		316900	Bre		2922901	[o] 29229 21.4		Bre	2912303	[o] 29123 20.3	⊕ S-Model
35C11, 35S11, 35S11 D, 35S11 /P	07/07→	78 / 106									
35C12, 35S12	05/06→	85 / 116			98040700	L130		Bre	2923201	[o] 29232 21	⊕ C-Model
35C14, 35C14 /P, 35S14, 35S14 /P, 35S14 D, 35S14 D/P	07/07→	103 / 140			98051100	L120	5912328→ D472694→		98040900	L250	⊕ C-Model
35C14, 35S14, 35S14 /P	05/06→	100 / 136			92155700	ø 290 x 28 x 46			82061700		⊕ S-Model
35C14 G, 35C14 G/P, 35S14 G, 35S14 G/P, 35C14 GD, 35S14 GD	07/07→	100 / 136							93177500	ø 296 x 16 x 69	⊕ ABS
									93229100	ø 296 x 16 x 69	⊖ ABS
									92171700	ø 294 x 24 x 87.6	⊕ ABS
									93175300	ø 294 x 24 x 83.5	⊖ ABS
		317000	Bre		2922901	[o] 29229 21.4		Bre	2923201	[o] 29232 21	
35C15	05/06→	107 / 146									
40C10	05/06→	70 / 95			98040700	L130			98040900	L250	
40C11, 40C11 D	07/07→	78 / 106									
40C12	05/06→	85 / 116									
40C13, 40C13 /P	07/07→	93 / 126			92155700	ø 290 x 28 x 46			93177500	ø 296 x 16 x 69	⊕ ABS
40C14, 40C14 /P	07/07→	103 / 140									
40C14 G, 40C14 G/P	07/07→	100 / 136									

		kW / hp											
DAILY IV Platform/Chassis 05/06→													
40C15	05/06→	107 / 146											
40C17, 40C17 /P	07/07→	125 / 170											
40C18	05/06→	130 / 176											
45C14, 45C14 /P	07/07→	103 / 140											
45C15	05/06→	107 / 146											
45C17, 45C17 /P	07/07→	125 / 170											
45C18, 45C18 /P, 45C18 D, 45C18 D/P	05/06→	130 / 176											
50C14, 50C14 /P	07/07→	103 / 140											
50C14 G, 50C14 G/P, 50C14 GD, 50C14 GD/P	07/07→	100 / 136											
50C15	05/06→	107 / 146											
50C17, 50C17 /P	07/07→	125 / 170											
60C14, 60C14 /P	07/07→	103 / 140											
60C17, 60C17 /P	07/07→	125 / 170											
65C14, 65C14 /P	07/07→	103 / 140											
65C14 G, 65C14 G/P, 65C14 GD, 65C14 GD/P	07/07→	100 / 136											
65C17, 65C17 /P	07/07→	125 / 170											
70C14, 70C14 /P	07/07→	103 / 140											
70C15	07/08→	107 / 146											
70C17, 70C17 /P	07/07→	125 / 170											
		317100	Bre		**2922901**	[o] 29229 21.4		Bre		**2912112**	[o] 29121 20.3	
50C18	05/06→	130 / 176			**98040700**	L130				**98042200**		
					92155700	ø 290 x 28 x 46		Bre		**82519900**		
										93089600	ø 289 x 22 x 84.5	
								Bre		**91059000**	ø 172 x 42	→axle 12947747
		317200	Bre		**2922901**	[o] 29229 21.4		Bre		**2923201**	[o] 29232 21	
60C15, 60C15 /P, 60C15 D, 60C15 D/P	05/06→	107 / 146			**98040700**	L130				**98040900**	L250	
60C18	05/06→	130 / 176			**92155700**	ø 290 x 28 x 46				**93177500**	ø 296 x 16 x 69	⊕ ABS
65C15, 65C15 /P, 65C15 D, 65C15 D/P	05/06→	107 / 146								**93229100**	ø 296 x 16 x 69	⊖ ABS
65C18	05/06→	130 / 176								**92171700**	ø 294 x 24 x 87.6	⊕ ABS
										93175300	ø 294 x 24 x 83.5	⊖ ABS
										93177700	ø 306 x 28 x 132	
									PRO	**93177703**	ø 306 x 28 x 132	
DAILY IV Pritsche/Fahrgestell 05/06→ → DAILY IV Platform/Chassis, Page 499													
DAILY V Box Body / Estate 09/11→													
		317300	Bre		**2922901**	[o] 29229 21.4		Bre		**2912303**	[o] 29123 20.3	⊕ L + S-Model
29L11 V, 35C11 V, 35S11 V, 40C11 V	09/11→	78 / 106			**98040700**	L130		Bre		**2923201**	[o] 29232 21	⊕ C-Model
					98051100	L120	5912328→ D472694→			**98040900**	L250	⊕ C-Model
					92155700	ø 290 x 28 x 46				**82061700**		⊕ L + S-Model
										93177500	ø 296 x 16 x 69	⊕ ABS
										93229100	ø 296 x 16 x 69	⊖ ABS
										92171700	ø 294 x 24 x 87.6	⊕ ABS
										93175300	ø 294 x 24 x 83.5	⊖ ABS
		317400	Bre		**2922901**	[o] 29229 21.4		Bre		**2912303**	[o] 29123 20.3	⊕ L + S-Model
29L13 V, 35C13 V, 35S13 V, 40C13 V, 40S13 V	09/11→	93 / 126			**98040700**	L130		Bre		**2923201**	[o] 29232 21	⊕ C-Model
					92155700	ø 290 x 28 x 46				**98040900**	L250	⊕ C-Model
										82061700		⊕ L + S-Model
										93177500	ø 296 x 16 x 69	⊕ ABS
										93229100	ø 296 x 16 x 69	⊖ ABS
										92171700	ø 294 x 24 x 87.6	⊕ ABS
										93175300	ø 294 x 24 x 83.5	⊖ ABS
		317500	Bre		**2922901**	[o] 29229 21.4		Bre		**2912303**	[o] 29123 20.3	⊕ L-Model

		kW / hp									
DAILY V Box Body / Estate 09/11→											
29L15 V, 35C15L V, 40C15L V, 50C15L V	09/11→	107 / 146		98040700	L130		Bre	2923201	[o] 29232 21	⊕ C-Model
				98051100	L120	5912328→ D472694→		98040900	L250	⊕ C-Model
				92155700	ø 290 x 28 x 46			82061700		⊕ L-Model
								93177500	ø 296 x 16 x 69	⊕ ABS
								93229100	ø 296 x 16 x 69	⊖ ABS
								92171700	ø 294 x 24 x 87.6	⊕ ABS
								93175300	ø 294 x 24 x 83.5	⊖ ABS
317600 35C15 V, 40C15 V	09/11→	107 / 146	Bre	2922901	[o] 29229 21.4		Bre	2923201	[o] 29232 21	
				98040700	L130			98040900	L250	
				92155700	ø 290 x 28 x 46			93177500	ø 296 x 16 x 69	⊕ ABS
								93229100	ø 296 x 16 x 69	⊖ ABS
								92171700	ø 294 x 24 x 87.6	⊕ ABS
								93175300	ø 294 x 24 x 83.5	⊖ ABS
317700 35C17 V, 35S17 V, 40C17 V, 45C17 V, 50C17 V, 60C17 V,	09/11→	125 / 170	Bre	2922901	[o] 29229 21.4		Bre	2923201	[o] 29232 21	
				98040700	L130			98040800	L300	
				92155700	ø 290 x 28 x 46			92171700	ø 294 x 24 x 87.6	
317800 35C21 V, 35S21 V, 40C21 V, 45C21 V, 50C21 V	09/11→	150 / 204	Bre	2922901	[o] 29229 21.4		Bre	2912303	[o] 29123 20.3	⊕ S-Model
				98040700	L130		Bre	2923201	[o] 29232 21	⊕ C-Model
				92155700	ø 290 x 28 x 46	⊕ C-Model		98040800	L300	⊕ C-Model
				92155900	ø 300 x 28 x 74.4	⊕ S-Model		98040900	L250	⊕ S-Model
								82061700		⊕ S-Model
								93177500	ø 296 x 16 x 69	⊕ S-Model
								92171700	ø 294 x 24 x 87.6	⊕ C-Model
DAILY V Dumptruck 09/11→										
317900 35C11K, 35S11DKP	09/11→	78 / 106	Bre	2922901	[o] 29229 21.4		Bre	2912303	[o] 29123 20.3	⊕ S-Model
35C15K, 35S15DKP, 50C15K, 60C15K, 65C15DK, 70C15K	09/11→	107 / 146		98040700	L130		Bre	2923201	[o] 29232 21	⊕ C-Model
				98051100	L120	5912328→ D472694→		98040800	L300	⊕ C-Model
				92155700	ø 290 x 28 x 46	⊕ C-Model		98040900	L250	⊕ S-Model
				92155900	ø 300 x 28 x 74.4	⊕ S-Model		82061700		⊕ S-Model
								93177500	ø 296 x 16 x 69	⊕ S-Model
								92171700	ø 294 x 24 x 87.6	⊕ C-Model
318000 35C13K, 35C13DKP	09/11→	93 / 126	Bre	2922901	[o] 29229 21.4		Bre	2923201	[o] 29232 21	
				98040700	L130			98040800	L300	
				92155700	ø 290 x 28 x 46			92171700	ø 294 x 24 x 87.6	
318100 35C17K, 35S17DKP, 50C17K, 65C17DK 70C17K	09/11→	125 / 170	Bre	2922901	[o] 29229 21.4		Bre	2912303	[o] 29123 20.3	⊕ S-Model
				98040700	L130		Bre	2923201	[o] 29232 21	⊕ C-Model
				92155700	ø 290 x 28 x 46	⊕ C-Model		98040800	L300	⊕ C-Model
				92155900	ø 300 x 28 x 74.4	⊕ S-Model		98040900	L250	⊕ S-Model
								82061700		⊕ S-Model
								93177500	ø 296 x 16 x 69	⊕ S-Model

I - M

		kW / hp											
DAILY V Dumptruck 09/11→													
318100													
35C17K, 35S17DKP, 50C17K, 65C17DK 70C17K	09/11→	125 / 170									92171700	ø 294 x 24 x 87.6	⊕ C-Model
318200			Bre		2922901	[o] 29229 21.4		Bre		2912303	[o] 29123 20.3		
35S21DKP	09/11→	150 / 205			98040700	L130				98040900	L250		
					92155900	ø 300 x 28 x 74.4				82061700			
										93177500	ø 296 x 16 x 69		
DAILY V Kasten/Kombi 09/11→ → DAILY V Box Body / Estate, Page 500													
DAILY V Kipper 09/11→ → DAILY V Dumptruck, Page 501													
DAILY V Platform/Chassis 09/11→													
318300			Bre		2922901	[o] 29229 21.4		Bre		2912303	[o] 29123 20.3		⊕ L-Model
26L11, 26L11D, 35C11D, 35S11, 40C11	09/11→	78 / 106			98040700	L130		Bre		2923201	[o] 29232 21		⊕ C-Model
					98051100	L120	5912328→ D472694→			98040800	L300		⊕ C-Model
					92155700	ø 290 x 28 x 46	⊕ C-Model			98040900	L250		⊕ L-Model
					92155900	ø 300 x 28 x 74.4	⊕ L-Model			82061700			⊕ L-Model
										93177500	ø 296 x 16 x 69		⊕ L-Model
										92171700	ø 294 x 24 x 87.6		⊕ C-Model
318400			Bre		2922901	[o] 29229 21.4		Bre		2912303	[o] 29123 20.3		⊕ L-Model
29L13, 29L13D, 35C13D, 40C13	09/11→	93 / 126			98040700	L130		Bre		2923201	[o] 29232 21		⊕ C-Model
					92155700	ø 290 x 28 x 46	⊕ C-Model			98040800	L300		⊕ C-Model
					92155900	ø 300 x 28 x 74.4	⊕ L-Model			98040900	L250		⊕ L-Model
										82061700			⊕ L-Model
										93177500	ø 296 x 16 x 69		⊕ L-Model
										92171700	ø 294 x 24 x 87.6		⊕ C-Model
318500			Bre		2922901	[o] 29229 21.4		Bre		2912303	[o] 29123 20.3		⊕ S-Model
35C15, 35C15D, 35S15, 40C15, 45C15, 50C15, 60C15, 70C15	09/11→	107 / 146			98040700	L130		Bre		2923201	[o] 29232 21		⊕ C-Model
					98051100	L120	5912328→ D472694→			98040800	L300		⊕ C-Model
					92155700	ø 290 x 28 x 46	⊕ C-Model			98040900	L250		⊕ S-Model
					92155900	ø 300 x 28 x 74.4	⊕ S-Model			82061700			⊕ S-Model
										93177500	ø 296 x 16 x 69		⊕ S-Model
										92171700	ø 294 x 24 x 87.6		⊕ C-Model
318600			Bre		2922901	[o] 29229 21.4		Bre		2912303	[o] 29123 20.3		⊕ S-Model
35C17, 35C17D, 35S17, 40C17, 45C17, 50C17, 60C17, 70C17	09/11→	125 / 170			98040700	L130		Bre		2923201	[o] 29232 21		⊕ C-Model
35C21, 35S21, 40C21, 45C21, 50C21, 60C21, 70C21	09/11→	150 / 205			92155700	ø 290 x 28 x 46	⊕ C-Model			98040800	L300		⊕ C-Model
					92155900	ø 300 x 28 x 74.4	⊕ S-Model			98040900	L250		⊕ S-Model
										82061700			⊕ S-Model
										93177500	ø 296 x 16 x 69		⊕ S-Model
										92171700	ø 294 x 24 x 87.6		⊕ C-Model
DAILY V Pritsche/Fahrgestell 09/11→ → DAILY V Platform/Chassis, Page 502													
MASSIF Pickup 10/08→													
318700			Luc		2074105	[–] 20741 15		Luc		2466301	[–] 24663 14		
3.0 HPI	10/08→	107 / 146											
3.0 HPT	10/08→	130 / 176											
MASSIF Pick-up 10/08→ → MASSIF Pickup, Page 502													

IVECO

IVECO

		kW / hp												
MASSIF Single Cab 10/08→														
		318800	Luc		**2074105**	[–] 20741 15			Luc		**2466301**	[–] 24663 14		
3.0 HPI	10/08→	107 / 146												
3.0 HPT	10/08→	130 / 176												
MASSIF Station Wagon 10/08→														
		318900	Luc		**2074105**	[–] 20741 15			Luc		**2466301**	[–] 24663 14		
3.0 HPI	10/08→	107 / 146												
3.0 HPT	10/08→	130 / 176												

JAGUAR

JAGUAR

		kW / hp												
F-TYPE Cabriolet 10/12→ → F-TYPE Convertible, Page 503														
F-TYPE Convertible 10/12→														
		319000	Ate		**2580301**	[o] 25803 18.7								
3.0	10/12→	250 / 340												
3.0	10/12→	280 / 381			**98048400**	L588								
		319100			**98048600**	L551								
5.0	10/12→	364 / 495												
S-TYPE (CCX) 01/99→12/08														
		319200	Luc		**2342301**	[–] 23423 17.8	→M45254		Bre		**2138102**	[–] 21381 15		
2.5 V6	04/02→10/07	147 / 200	Bre		**2348901**	[–] 23489 16.3			Luc		**2342401**	[–] 23424 17.8	→M45254	
			Luc		**2347001**	[–] 23470 17.8	M45255→		Luc		**2419001**	[–] 24190 16.5	M45255→	
			Luc		**2390801**	[o] 23908 17.8	M45255→		Ate		**2413701**	[–] 24137 16.7	N52048→	
			Luc		**82510700**				Ate		**2413781**	[–] 24137 16.7	N52048→	
			Luc		**82063500**				Luc		**82506700**		→02/06	
				PRO	**92099003**	ø 300 x 30 x 43	→N52047		Luc		**82063500**		→M45254	
				PRO	**92158703**	ø 320 x 30 x 43	→N52047		Ate		**82503500**		02/06→	
				PRO	**92173503**	ø 326 x 30 x 46	N52048→				**92099100**	ø 288 x 20 x 32.5	→N52047	
										PRO	**92178003**	ø 326 x 20 x 38	N52048→	
									Bre		**2061005**	[–] 20610		
		319300	Luc		**2342301**	[–] 23423 17.8	→M45254		Bre		**2138102**	[–] 21381 15		
2.7 D	06/04→10/07	152 / 207												
4.2 V8	04/02→10/07	219 / 298	Bre		**2348901**	[–] 23489 16.3			Luc		**2342401**	[–] 23424 17.8	→M45254	
			Luc		**2347001**	[–] 23470 17.8	M45255→		Luc		**2419001**	[–] 24190 16.5	M45255→	
			Luc		**2390801**	[o] 23908 17.8	M45255→		Ate		**2413701**	[–] 24137 16.7	N52048→	
			Ate		**2408401**	[o] 24084 19	N52048→ ⊖ USA ⊖ CDN		Ate		**2413781**	[–] 24137 16.7	N52048→	
			Ate		**2408403**	[o] 24084 19	N52048→ ⊕ USA ⊕ CDN		Luc		**82506700**		→02/06	
			Luc		**82510700**				Luc		**82063500**		→M45254	
			Luc		**82063500**				Ate		**82503500**		02/06→	
				PRO	**92099003**	ø 300 x 30 x 43	→N52047				**92099100**	ø 288 x 20 x 32.5	→N52047	
				PRO	**92158703**	ø 320 x 30 x 43	→N52047			PRO	**92178003**	ø 326 x 20 x 38	N52048→	
				PRO	**92173503**	ø 326 x 30 x 46	N52048→		Bre		**2061005**	[–] 20610		
		319400	Luc		**2342301**	[–] 23423 17.8	→M45254		Luc		**2342401**	[–] 23424 17.8	→N52047	
3.0 V6	01/99→10/07	175 / 238	Luc		**2390801**	[o] 23908 17.8	M45255→ →N52047		Ate		**2413701**	[–] 24137 16.7	N52048→	
			Ate		**2408401**	[o] 24084 19	N52048→ ⊖ USA ⊖ CDN		Ate		**2413781**	[–] 24137 16.7	N52048→	
			Ate		**2408403**	[o] 24084 19	N52048→ ⊕ USA ⊕ CDN		Luc		**82506700**		→02/06	
			Luc		**82510700**				Luc		**82063500**			
			Luc		**82063500**				Ate		**82503500**		02/06→	
				PRO	**92099003**	ø 300 x 30 x 43	→N52047				**92099100**	ø 288 x 20 x 32.5	→N52047	

30 kW / hp											
S-TYPE (CCX) 01/99→12/08											
319400											
3.0 V6	01/99→10/07	175 / 238		PRO	**92158703**	ø 320 x 30 x 43	→N52047		PRO	**92178003**	ø 326 x 20 x 38	N52048→
				PRO	**92173503**	ø 326 x 30 x 46	N52048→					
319500			Luc		**2342301**	[–] 23423 17.8	→M45254	Luc		**2342401**	[–] 23424 17.8	→N52047
4.0 V8	01/99→04/02	203 / 276										
4.0 V8	09/99→12/02	209 / 281	Luc		**2390801**	[o] 23908 17.8	M45255→ →N52047	Ate		**2413701**	[–] 24137 16.7	N52048→
			Ate		**2408401**	[o] 24084 19	N52048→ ⊖ USA ⊖ CDN	Ate	epad	**2413781**	[–] 24137 16.7	N52048→
			Ate		**2408403**	[o] 24084 19	N52048→ ⊕ USA ⊕ CDN	Luc		**82506700**		
			Luc		**82510700**			Luc		**82063500**		
			Luc		**82063500**					**92099100**	ø 288 x 20 x 32.5	→N52047
				PRO	**92099003**	ø 300 x 30 x 43	→N52047		PRO	**92178003**	ø 326 x 20 x 38	N52048→
				PRO	**92158703**	ø 320 x 30 x 43	→N52047					
				PRO	**92173503**	ø 326 x 30 x 46	N52048→					
319600			Bre		**2348901**	[–] 23489 16.3	→N52047	Bre		**2138102**	[–] 21381 15	→N52047
4.2 Supercharged	11/01→12/08	298 / 405										
R 4,2 V8	04/02→10/07	291 / 396	Ate		**2407901**	[o] 24079 18.7	N52048→	Ate		**2413701**	[–] 24137 16.7	N52048→
				PRO	**92186303**	ø 355 x 32 x 48	N52048→	Ate	epad	**2413781**	[–] 24137 16.7	N52048→
				PRO	**92223103**	ø 365 x 32 x 72	→N52047	Ate		**82503500**		
									PRO	**92221403**	ø 330 x 15 x 42	→N52047
									PRO	**92178003**	ø 326 x 20 x 38	N52048→
								Bre		**2061005**	[–] 20610	
S-TYPE Saloon (CCX) 01/99→12/08 → S-TYPE (CCX), Page 503											
S-TYPE Stufenheck (CCX) 01/99→12/08 → S-TYPE (CCX), Page 503											
Vanden Plas (NAW, NBW) 07/97→05/03 → XJ (NAW, NBW), Page 505											
XF (_J05_, CC9) 03/08→											
319700			Ate		**2408401**	[o] 24084 19	⊖ USA ⊖ CDN	Ate		**2413701**	[–] 24137 16.7	
2.0	06/12→	177 / 241										
2.2 D	04/11→	120 / 163	Ate		**2408403**	[o] 24084 19	⊕ USA ⊕ CDN	Ate	epad	**2413781**	[–] 24137 16.7	
2.2 D	05/11→	140 / 190										
2.2 D	03/12→	147 / 200			**98049600**	L610				**98048500**	L635	
2.7 D	03/08→	152 / 207		PRO	**92173503**	ø 326 x 30 x 46			PRO	**92178003**	ø 326 x 20 x 38	
3.0	03/08→	175 / 238										
3.0	03/08→	179 / 243										
3.0 D	03/09→	155 / 211										
3.0 D	03/09→	177 / 241										
4.2	03/08→	219 / 298										
319800			Ate		**2407901**	[o] 24079 18.7		Ate		**2413701**	[–] 24137 16.7	
3.0 D	03/09→	202 / 275										
5.0	03/09→	283 / 385			**98048400**	L588		Ate	epad	**2413781**	[–] 24137 16.7	
				PRO	**92186303**	ø 355 x 32 x 48				**98048500**	L635	
									PRO	**92178003**	ø 326 x 20 x 38	
319900			Ate		**2407903**	[o] 24079 20.2		Ate		**2413701**	[–] 24137 16.7	
4.2	07/09→	313 / 426										
4.2 Kompressor	03/08→	306 / 416			**98048400**	L588		Ate	epad	**2413781**	[–] 24137 16.7	
				PRO	**92186303**	ø 355 x 32 x 48				**98048500**	L635	
									PRO	**92178003**	ø 326 x 20 x 38	
320000			Ate		**2447401**	[–] 24474 17.8		Ate		**2511401**	[–] 25114 16.2	
5.0 Kompressor	01/09→	346 / 471										
5.0 Kompressor	03/09→	375 / 510			**98048600**	L551				**98048500**	L635	
XF Saloon (_J05_, CC9) 03/08→ → XF (_J05_, CC9), Page 504											
XF SPORTBRAKE (CC9) 09/12→											
320100			Ate		**2408401**	[o] 24084 19	⊖ USA ⊖ CDN	Ate		**2413701**	[–] 24137 16.7	
2.2 D	09/12→	120 / 163										
2.2 D	09/12→	147 / 200	Ate		**2408403**	[o] 24084 19	⊕ USA ⊕ CDN	Ate	epad	**2413781**	[–] 24137 16.7	
3.0 D	09/12→	177 / 241										
					98049600	L610				**98048500**	L635	

		kW / hp												
XF SPORTBRAKE (CC9) 09/12→														
		320100		PRO	92173503	ø 326 x 30 x 46				PRO	92178003	ø 326 x 20 x 38	
2.2 D	09/12→	120 / 163												
2.2 D	09/12→	147 / 200												
3.0 D	09/12→	177 / 241												
		320200	Ate		2407901	[o] 24079 18.7			Ate		2413701	[–] 24137 16.7		
3.0 D	09/12→	202 / 275			98048400	L588			Ate	epad	2413781	[–] 24137 16.7		
				PRO	92186303	ø 355 x 32 x 48					98048500	L635		
										PRO	92178003	ø 326 x 20 x 38		
XF Stufenheck (_J05_, CC9) 03/08→ → XF (_J05_, CC9), Page 504														
XJ (NAW, NBW) 07/97→05/03														
		320300	Ate		2312601	[o] 23126 17.5			Ate		2448701	[o] 24487 16		
8 3.2	07/97→05/03	174 / 237	Ate		82029300						92139300	ø 305 x 20 x 67.8		
8 4.0	07/97→05/03	209 / 284	Ate		82062900						91070100	ø 180 x 30		
					92098900	ø 305 x 28.5 x 49.5								
				PRO	92184903	ø 325 x 28 x 49.5								
		320400	Bre		2329301	[–] 23293 18.2			Ate		2127504	[o] 21275 16.9		
R 4.0	07/97→05/03	267 / 363	Bre		82512800						92139300	ø 305 x 20 x 67.8		
			Ate		82062900						91070100	ø 180 x 30		
					92098900	ø 305 x 28.5 x 49.5								
				PRO	92184903	ø 325 x 28 x 49.5								
XJ (X35_, _J12_, _J24_) 10/09→														
		320500	Ate		2407901	[o] 24079 18.7	⊖ USA		Ate		2413701	[–] 24137 16.7		
2.0	05/12→	177 / 241												
3.0	03/12→	250 / 340	Ate		2580301	[o] 25803 18.7	⊕ USA		Ate	epad	2413781	[–] 24137 16.7		
3.0 D	10/09→	202 / 275												
5.0 V 8	10/09→	283 / 385			98048400	L588	2x				98048500	L635		
				PRO	92186303	ø 355 x 32 x 48				PRO	92178003	ø 326 x 20 x 38		
		320600	Ate		2580301	[o] 25803 18.7			Ate		2413701	[–] 24137 16.7		
3.0 AWD	10/12→	250 / 340		PRO	92186303	ø 355 x 32 x 48			Ate	epad	2413781	[–] 24137 16.7		
											98048500	L635		
										PRO	92178003	ø 326 x 20 x 38		
		320700	Ate		2447401	[–] 24474 17.8			Ate		2511401	[–] 25114 16.2		
5.0 V8	10/09→	346 / 471												
5.0 V8	10/09→	375 / 510			98048600	L551	2x				98048500	L635		
XJ (X350, X358) 05/03→03/09														
		320800	Luc		2347001	[–] 23470 17.8	→G49700		Luc		2342401	[–] 23424 17.8	→G49700	
2,7 D	10/05→03/09	152 / 207												
3.0	05/03→03/09	175 / 238	Ate		2408401	[o] 24084 19	G49701→ ⊖ USA ⊖ CDN		Ate		2413701	[–] 24137 16.7	G49701→	
3.0	04/04→01/07	179 / 243												
3.5	05/03→03/09	190 / 258	Ate		2408403	[o] 24084 19	→G49701 ⊕ USA ⊕ CDN		Ate	epad	2413781	[–] 24137 16.7	G49701→	
4.2	05/03→03/09	219 / 298		PRO	92158703	ø 320 x 30 x 43	→G49700				92099100	ø 288 x 20 x 32.5	→G49700	
				PRO	92173503	ø 326 x 30 x 46	G49701→			PRO	92178003	ø 326 x 20 x 38	G49701→	
		320900	Bre		2348901	[–] 23489 16.3	→G49700		Bre		2138102	[–] 21381 15	→G49700	
R 4.2	05/03→03/09	291 / 395	Ate		2407901	[o] 24079 18.7	G49701→		Ate		2413701	[–] 24137 16.7	G49701→	
				PRO	92186303	ø 355 x 32 x 48	G49701→		Ate	epad	2413781	[–] 24137 16.7	G49701→	
				PRO	92223103	ø 365 x 32 x 72	→G49700			PRO	92221403	ø 330 x 15 x 42	→G49700	
										PRO	92178003	ø 326 x 20 x 38	G49701→	
									Bre		2061005	[–] 20610	→G49700	
XJ Saloon (NAW, NBW) 07/97→05/03 → XJ (NAW, NBW), Page 505														

I - M

XJ Saloon (X350, X358) 05/03→03/09 → XJ (X350, X358), Page 505

XJ Stufenheck (NAW, NBW) 07/97→05/03 → XJ (NAW, NBW), Page 505

XJ Stufenheck (X350, X358) 05/03→03/09 → XJ (X350, X358), Page 505

XK 8 Convertible (QDV) 03/96→05/07

		kW / hp											
		321000	Bre	2329301	[–] 23293 18.2	Brembo	Bre	2138102	[–] 21381 15	Brembo
4.0	03/96→07/05	209 / 284								
4.0	05/96→07/99	216 / 294	Ate	2312601	[o] 23126 17.5		Ate	2448701	[o] 24487 16	
4.0	02/98→07/05	267 / 363								
4.2	08/02→12/06	219 / 298		98019000	L300			98019100	L455	
R 4,2	08/02→07/05	291 / 396								
			Bre	82512800		Brembo		92139300	ø 305 x 20 x 67.8	Teves
			Ate	82029300				91070100	ø 180 x 30	
			Ate	82062900						
			PRO	92184903	ø 325 x 28 x 49.5	Teves				
			PRO	92234603	ø 355 x 32 x 49.5	Brembo A30645→				
		321100	Bre	2329301	[–] 23293 18.2	Brembo	Bre	2138102	[–] 21381 15	Brembo
4.0 XKR	05/98→05/07	276 / 375								
			Ate	2312601	[o] 23126 17.5	Teves	Ate	2448701	[o] 24487 16	Teves
				98019000	L300			98019100	L455	
			Bre	82512800		Brembo		92139300	ø 305 x 20 x 67.8	Teves
			Ate	82029300				91070100	ø 180 x 30	
			Ate	82062900						
			PRO	92184903	ø 325 x 28 x 49.5	Teves				
			PRO	92234603	ø 355 x 32 x 49.5	Brembo A30645→				

XK 8 Coupe (QEV) 03/96→05/07

		321200	Bre	2329301	[–] 23293 18.2	Brembo	Bre	2138102	[–] 21381 15	Brembo
4.0	03/96→07/05	209 / 284								
4.0	05/96→07/99	216 / 294	Ate	2312601	[o] 23126 17.5		Ate	2448701	[o] 24487 16	
4.0	02/98→07/05	267 / 363								
4.2	08/02→12/06	219 / 298		98019000	L300			98019100	L455	
			Bre	82512800		Brembo		92139300	ø 305 x 20 x 67.8	Teves
			Ate	82029300				91070100	ø 180 x 30	
			Ate	82062900						
			PRO	92184903	ø 325 x 28 x 49.5	Teves				
			PRO	92234603	ø 355 x 32 x 49.5	Brembo A30645→				
		321300	Bre	2329301	[–] 23293 18.2	Brembo	Bre	2138102	[–] 21381 15	Brembo
4.0 XKR	05/98→05/07	276 / 375								
R 4,2	08/02→07/05	291 / 396	Ate	2312601	[o] 23126 17.5	Teves	Ate	2448701	[o] 24487 16	Teves
				98019000	L300			98019100	L455	
			Bre	82512800		Brembo		92139300	ø 305 x 20 x 67.8	Teves
			Ate	82029300				91070100	ø 180 x 30	
			Ate	82062900						
			PRO	92184903	ø 325 x 28 x 49.5	Teves				
			PRO	92234603	ø 355 x 32 x 49.5	Brembo A30645→				

XK Cabriolet (_J43_) 03/06→ → XK Convertible (_J43_), Page 506

XK Convertible (_J43_) 03/06→

		321400	Alc	2485001	[–] 24850 16.6	⊕ perform. brk. sys.	Ate	2413701	[–] 24137 16.7	⊖ perform. brk. sys.
3.6	10/07→	190 / 258								
4.2 XK8	03/06→	219 / 298	Ate	2408401	[o] 24084 19	⊖ perform. brk. sys. ⊖ USA ⊖ CDN	Ate	2413781	[–] 24137 16.7	⊖ perform. brk. sys.
								epad		
			Ate	2408403	[o] 24084 19	⊖ perform. brk. sys. ⊕ USA ⊕ CDN	Alc	2485101	[–] 24851 15.6	⊕ perform. brk. sys.
			PRO	92173503	ø 326 x 30 x 46	⊖ perform. brk. sys.	PRO	92178003	ø 326 x 20 x 38	⊖ perform. brk. sys.

		kW / hp											
XK Convertible (_J43_) 03/06→													
		321400							Bre		2061005	[–] 20610	⊕ perform. brk. sys.
3.6	10/07→	190 / 258											
4.2 XK8	03/06→	219 / 298											
		321500	Alc		2485001	[–] 24850 16.6	⊕ perform. brk. sys.		Ate		2413701	[–] 24137 16.7	⊖ perform. brk. sys.
4.2 XKR	03/06→	306 / 416											
4.2 XKR	08/06→	313 / 426	Ate		2407901	[o] 24079 18.7	⊖ perform. brk. sys.		Ate	epad	2413781	[–] 24137 16.7	⊖ perform. brk. sys.
5.0 V8	01/09→	283 / 385											
				PRO	92186303	ø 355 x 32 x 48	⊖ perform. brk. sys.		Alc		2485101	[–] 24851 15.6	⊕ perform. brk. sys.
										PRO	92178003	ø 326 x 20 x 38	⊖ perform. brk. sys.
									Bre		2061005	[–] 20610	⊕ perform. brk. sys.
		321600	Ate		2447401	[–] 24474 17.8	⊖ perform. brk. sys.		Ate		2511401	[–] 25114 16.2	⊖ perform. brk. sys.
5.0 XKR	01/09→	375 / 510											
			Alc		2485001	[–] 24850 16.6	⊕ perform. brk. sys.		Alc		2485101	[–] 24851 15.6	⊕ perform. brk. sys.
									Bre		2061005	[–] 20610	⊕ perform. brk. sys.
		321700	Ate		2447401	[–] 24474 17.8	⊖ perform. brk. sys.		Ate		2511401	[–] 25114 16.2	
5.0 XKR-S	01/11→	405 / 550											
			Alc		2485001	[–] 24850 16.6	⊕ perform. brk. sys.		Alc		2485101	[–] 24851 15.6	⊕ perform. brk. sys.
									Bre		2061005	[–] 20610	⊕ perform. brk. sys.
XK Coupe (_J43_) 03/06→													
		321800	Alc		2485001	[–] 24850 16.6	⊕ perform. brk. sys.		Ate		2413701	[–] 24137 16.7	⊖ perform. brk. sys.
3.5	07/07→	190 / 258											
4.2 XK8	03/06→	219 / 298	Ate		2408401	[o] 24084 19	⊖ perform. brk. sys. ⊖ USA ⊖ CDN		Ate	epad	2413781	[–] 24137 16.7	⊖ perform. brk. sys.
			Ate		2408403	[o] 24084 19	⊖ perform. brk. sys. ⊕ USA ⊕ CDN		Alc		2485101	[–] 24851 15.6	⊕ perform. brk. sys.
				PRO	92173503	ø 326 x 30 x 46	⊖ perform. brk. sys.			PRO	92178003	ø 326 x 20 x 38	⊖ perform. brk. sys.
									Bre		2061005	[–] 20610	⊕ perform. brk. sys.
		321900	Alc		2485001	[–] 24850 16.6	B00379→		Ate		2413701	[–] 24137 16.7	→B00378
4.2 XKR	03/06→	291 / 396											
			Ate		2408401	[o] 24084 19	→B00378 ⊖ USA ⊖ CDN		Ate	epad	2413781	[–] 24137 16.7	→B00378
			Ate		2408403	[o] 24084 19	→B00378 ⊕ USA ⊕ CDN		Alc		2485101	[–] 24851 15.6	B00379→
									Bre		2061005	[–] 20610	Alcon -brake
		322000	Alc		2485001	[–] 24850 16.6	⊕ perform. brk. sys.		Ate		2413701	[–] 24137 16.7	⊖ perform. brk. sys.
4.2 XKR	03/06→	306 / 416											
4.2 XKR	08/06→	313 / 426	Ate		2407901	[o] 24079 18.7	⊖ perform. brk. sys.		Ate	epad	2413781	[–] 24137 16.7	⊖ perform. brk. sys.
5.0 V8	01/09→	283 / 385											
				PRO	92186303	ø 355 x 32 x 48	⊖ perform. brk. sys.		Alc		2485101	[–] 24851 15.6	⊕ perform. brk. sys.
										PRO	92178003	ø 326 x 20 x 38	⊖ perform. brk. sys.
									Bre		2061005	[–] 20610	⊕ perform. brk. sys.
		322100	Ate		2447401	[–] 24474 17.8	⊖ perform. brk. sys.		Ate		2511401	[–] 25114 16.2	⊖ perform. brk. sys.
5.0 XKR	01/09→	375 / 510											
			Alc		2485001	[–] 24850 16.6	⊕ perform. brk. sys.		Alc		2485101	[–] 24851 15.6	⊕ perform. brk. sys.
									Bre		2061005	[–] 20610	⊕ perform. brk. sys.
		322200	Alc		2485001	[–] 24850 16.6	Alcon		Ate		2511401	[–] 25114 16.2	B32753→ Teves
5.0 XKR	09/10→	390 / 530											
			Ate		2432801	[o] 24328 20.8	Teves		Ate		2413701	[–] 24137 16.7	→B32752 Teves
									Ate	epad	2413781	[–] 24137 16.7	→B32752 Teves
									Alc		2485101	[–] 24851 15.6	Alcon
									Bre		2061005	[–] 20610	Alcon -brake
		322300	Ate		2447401	[–] 24474 17.8	⊖ perform. brk. sys.		Ate		2511401	[–] 25114 16.2	
5.0 XKR-S	01/11→	405 / 550											
			Alc		2485001	[–] 24850 16.6	⊕ perform. brk. sys.		Alc		2485101	[–] 24851 15.6	⊕ perform. brk. sys.
									Bre		2061005	[–] 20610	⊕ perform. brk. sys.
X-TYPE (CF1) 06/01→11/09													
		322400	Bos		2327904	[–] 23279 18.4			Bos		2426001	[–] 24260 16.3	E73994→
2.0 D	07/03→11/09	96 / 130											
2.0 V6	03/02→10/05	115 / 156											
2.2 D	10/05→11/09	110 / 150											

JAGUAR

JAGUAR

X-TYPE (CF1) 06/01→11/09

			kW / hp											
2.2 D	10/05→11/09	114 / 155	322600	Bos		82063800			Bos		2355701	[–] 23557 17.2	→E73993
2.2 D	01/07→11/09	107 / 146											
2.5 V6 All-wheel Drive	06/01→11/09	144 / 196		Bos		82510100			Bos		82054300		
3.0 V6 All-wheel Drive	06/01→11/07	169 / 230			PRO	92109603	ø 300 x 24 x 47			PRO	92109703	ø 280 x 12 x 34	

X-TYPE Estate 11/03→12/09

		322500	Bos		2327904	[–] 23279 18.4		Bos		2426001	[–] 24260 16.3	E73994→
2.0 D	02/04→12/09	96 / 130										
2.0 V6	11/03→03/09	115 / 156	Bos		82063800			Bos		2355701	[–] 23557 17.2	→E73993
2.2 D	10/05→12/09	110 / 150										
2.2 D	10/05→12/09	114 / 155										
2.2 D	01/07→12/09	107 / 146	Bos		82510100			Bos		82054300		
2.5	02/04→12/09	144 / 196										
3.0	02/04→12/09	169 / 230		PRO	92109603	ø 300 x 24 x 47			PRO	92109703	ø 280 x 12 x 34	

X-TYPE Saloon (CF1) 06/01→11/09 → X-TYPE (CF1), Page 507

X-TYPE Stufenheck (CF1) 06/01→11/09 → X-TYPE (CF1), Page 507

JEEP

JEEP

CHEROKEE (KJ) 09/01→01/08

			kW / hp											
2.4 4x4	09/01→01/08	108 / 147	322600	Luc		2363801	[+] 23638 17.5		Kel		2435501	[–] 24355 14	01/03→
2.4 Laredo	10/01→09/04	108 / 147											
3.7 4x4	09/01→10/07	157 / 214				92119700	ø 288 x 28 x 65				91069700	ø 254 x 46	→12/02
3.7 4x4	09/01→01/08	155 / 211								PRO	92194003	ø 284.9 x 12 x 59.3	01/03→
3.7 Laredo	10/01→09/04	150 / 204											
		322700	Luc		2363801	[+] 23638 17.5		Kel		2435501	[–] 24355 14	
2.5 CRD 4x4	09/01→01/08	105 / 143											
					92119700	ø 288 x 28 x 65				91069700	ø 254 x 46	→12/02	
				PRO	92194003	ø 284.9 x 12 x 59.3	01/03→						
		322800	Luc		2363801	[+] 23638 17.5		Kel		2435501	[–] 24355 14	
2.8 CRD 4x4	11/02→01/08	110 / 150											
2.8 CRD 4x4	11/04→01/08	120 / 163			92119700	ø 288 x 28 x 65			PRO	92194003	ø 284.9 x 12 x 59.3		
3.7 4x4	08/03→01/08	150 / 204											

CHEROKEE (KJ) Van 09/01→

		322900	Luc		2363801	[+] 23638 17.5		Kel		2435501	[–] 24355 14	
2.5 CRD	09/01→	105 / 143										
				92119700	ø 288 x 28 x 65				91069700	ø 254 x 46	→12/02	
			PRO	92194003	ø 284.9 x 12 x 59.3	01/03→						
		323000	Luc		2363801	[+] 23638 17.5		Kel		2435501	[–] 24355 14	
2.8 CRD	11/04→	120 / 163										
				92119700	ø 288 x 28 x 65				PRO	92194003	ø 284.9 x 12 x 59.3	

CHEROKEE (KK) 01/08→

		323100	Bos		2460401	[+] 24604 18.5	⊕ reinf. susp.	TRW		2460201	[+] 24602 16	
2.8 CRD 4x4	05/08→	130 / 177										
2.8 CRDi 4x4	01/10→	147 / 200	Bos		2460402	[+] 24604 17.5	⊖ reinf. susp.	Luc		82060200		
3.7 V6	01/08→	157 / 213										
3.7 V6 4x4	01/08→	151 / 205	Luc		82060200					91073500	ø 207 x 32	
3.7 V6 4x4	01/08→	157 / 213										
				PRO	92203303	ø 301.5 x 28 x 57.4	⊖ reinf. susp.					

CHEROKEE (XJ) 10/84→09/01

		323200	Kel		2182001	[–] 21820 15.5	→12/89			91056500	ø 228.6 x 66	⊕ rear drum brake
2.1 TD	10/84→09/01	64 / 87										
			Kel		2182202	[–] 21822 17.2	01/90→ →12/96					
					92113500	ø 280 x 24 x 81.5	→08/98					
				PRO	92184303	ø 280 x 22 x 77						
		323300	Kel		2182202	[–] 21822 17.2	→12/96	Ate		2333901	[–] 23339 17.1	
2.5	10/95→09/01	89 / 121										
					92113500	ø 280 x 24 x 81.5	→08/98			91056500	ø 228.6 x 66	⊕ rear drum brake
		323400	Kel		2182202	[–] 21822 17.2	→12/96			91056500	ø 228.6 x 66	⊕ rear drum brake
2.5 i 4x4	10/84→09/01	87 / 118										
2.5 i 4x4	12/91→09/01	90 / 122			92113500	ø 280 x 24 x 81.5	→08/98					
2.5 SE	10/96→09/99	87 / 118										
2.5 Tdi 4x4	10/96→09/01	85 / 116										
4.0 i	12/91→09/01	135 / 184										

→

		kW / hp												
CHEROKEE (XJ) 10/84→09/01														
4.0 i 4x4	01/95→09/01	131 / 178	Kel		2182202	[–] 21822 17.2	→12/96				91056500	ø 228.6 x 66	⊕ rear drum brake
					92113500	ø 280 x 24 x 81.5	→08/98						
2.5 TD	01/88→09/01	323500 85 / 116	Kel		2182001	[–] 21820 15.5	→12/89	Ate		2333901	[–] 23339 17.1	
			Kel		2182202	[–] 21822 17.2	01/90→ →12/96			91056500	ø 228.6 x 66	⊕ rear drum brake
					92113500	ø 280 x 24 x 81.5	→08/98					
				PRO	92184303	ø 280 x 22 x 77						
4.0 i	01/88→09/01	323600 136 / 185	Kel		2182001	[–] 21820 15.5	→12/89			91056500	ø 228.6 x 66	⊕ rear drum brake
			Kel		2182202	[–] 21822 17.2	01/90→ →12/96					
					92113500	ø 280 x 24 x 81.5	→08/98					
4.0 i	07/98→09/01	323700 127 / 173			92113500	ø 280 x 24 x 81.5	→08/98			91056500	ø 228.6 x 66	⊕ rear drum brake
4.0 i	02/99→09/01	323800 135 / 184	Ate		2363101	[+] 23631 17.8	→08/01	Ate		2333901	[–] 23339 17.1	
										91056500	ø 228.6 x 66	⊕ rear drum brake
COMMANDER (XK) 09/05→12/10														
3.0 CRD 4x4 3.7 V6 4x4 4.7 V8 4x4 5.7 V8 4x4	04/06→12/10 09/05→12/10 09/05→12/10 09/05→12/10	323900 160 / 218 157 / 214 170 / 231 240 / 326	Ake		2425001	[+] 24250 18.6		Kel		2425801	[+] 24258 17.9	
				PRO	92184503	ø 328 x 30 x 53			PRO	92177403	ø 320 x 14 x 66.2	
										91073300	ø 205 x 31	
COMPASS (MK49) 08/06→														
2.0	05/11→	324000 115 / 156	Ake		2458301	[+] 24583 17		Ake		2358202	[+] 23582 15.5	⊕ rim size 18"
			Ake		82507300			Ake		2401401	[+] 24014 15.4	
				PRO	92184403	ø 294 x 26.1 x 46				91076800	ø 228.6 x 37	
										94036300	ø 228,5 x 46	
										91073400	ø 170 x 32	
2.0 CRD 2.0 CRD 4x4	08/06→ 09/06→	324100 103 / 140 103 / 140	Ake		2358403	[+] 23584 16	⊕ rim size 17"	Ake		2358202	[+] 23582 15.5	⊕ rim size 18"
			Ake		2458301	[+] 24583 17	⊕ rim size 18"	Ake		2401401	[+] 24014 15.4	⊕ rim size 17"
			Ake		82507300		⊕ rim size 18"			91073400	ø 170 x 32	
				PRO	92184403	ø 294 x 26.1 x 46						
2.2 CRD 2.2 CRD 4x4	05/11→ 12/10→	324200 100 / 136 120 / 163	Ake		2458301	[+] 24583 17		Ake		2358202	[+] 23582 15.5	⊕ rim size 18"
			Ake		82507300			Ake		2401401	[+] 24014 15.4	⊕ rim size 17"
				PRO	92184403	ø 294 x 26.1 x 46				91076800	ø 228.6 x 37	
									PRO	92177303	ø 302 x 10 x 60.5	⊕ rim size 18"
										94036300	ø 228,5 x 46	
										91073400	ø 170 x 32	
2.4	08/06→	324300 125 / 170	Ake		2358403	[+] 23584 16	⊕ rim size 17"	Ake		2401401	[+] 24014 15.4	
			Ake		2458301	[+] 24583 17	⊕ rim size 18"	TRW		2460201	[+] 24602 16	
			Ake		82507300		⊕ rim size 18"			91073400	ø 170 x 32	
				PRO	92184403	ø 294 x 26.1 x 46						
2.4 4x4	09/06→	324400 125 / 170	Ake		2358403	[+] 23584 16	⊕ rim size 17"	Ake		2401401	[+] 24014 15.4	
			Ake		2458301	[+] 24583 17	⊕ rim size 18"			91073400	ø 170 x 32	
			Ake		82507300		⊕ rim size 18"					
				PRO	92184403	ø 294 x 26.1 x 46						
GRAND CHEROKEE (ZJ) 09/91→04/99 → GRAND CHEROKEE I (ZJ), Page 510														

		kW / hp											
GRAND CHEROKEE (ZJ) 09/91→04/99 → GRAND CHEROKEE I (ZJ), Page 510													
GRAND CHEROKEE I (ZJ) 09/91→04/99													
		324500	Kel		2182202	[–] 21822 17.2	→09/98	Kel		2450601	[+] 24506 14.8	
2.5 TD 4x4 (Z)	10/95→04/99	85 / 115										
4.0 i 4x4 (Z)	10/95→04/99	130 / 177			92113500	ø 280 x 24 x 81.5			PRO	92169403	ø 285 x 11 x 59.5	
5.2 4x4 (Z)	10/95→04/99	156 / 212										
5.9 i 4x4	08/97→04/99	177 / 241								91071500	ø 184 x 30	
		324600	Kel		2182202	[–] 21822 17.2	→09/98	Kel		2450601	[+] 24506 14.8	
4.0 i 4x4 (ZJ)	09/91→04/99	132 / 180										
4.0 i 4x4 (ZJ)	09/91→04/99	135 / 184			92113500	ø 280 x 24 x 81.5				91071500	ø 184 x 30	358322→
5.2 i 4x4 (ZJ)	01/92→04/99	155 / 211										
		324700	Kel		2182202	[–] 21822 17.2	→09/98	Kel		2450601	[+] 24506 14.8	
5.2 i 4x4 (ZJ)	09/92→04/99	158 / 215										
					92113500	ø 280 x 24 x 81.5			PRO	92169403	ø 285 x 11 x 59.5	
										91071500	ø 184 x 30	358322→
GRAND CHEROKEE II (WJ, WG) 10/98→09/05													
		324800	Ate		2363101	[+] 23631 17.8	Teves	Ate		2333901	[–] 23339 17.1	
2.7 CRD 4x4	10/01→09/05	120 / 163										
4.7 V8 4x4	04/99→09/05	164 / 223	Ake		2408301	[+] 24083 19.2	Akebono			92113700	ø 305 x 10 x 75.2	
4.7 V8 4x4	10/01→09/05	190 / 258										
			Ake		2408301	[+] 24083 19.2	10/02→			91071700	ø 195 x 30	
					92113600	ø 305 x 26 x 63.5						
		324900	Ake		2408301	[+] 24083 19.2		Ate		2333901	[–] 23339 17.1	
2.7 CRD 4x4	10/04→09/05	120 / 163										
2.7 CRD Laredo	10/04→09/05	120 / 163			92113600	ø 305 x 26 x 63.5				92113700	ø 305 x 10 x 75.2	
4.7 V8	10/04→09/05	167 / 227										
4.7 V8 4x4	06/03→09/05	167 / 227								91071700	ø 195 x 30	
		325000	Ate		2363101	[+] 23631 17.8	Teves	Ate		2333901	[–] 23339 17.1	
3.1 TD 4x4	04/99→12/01	103 / 140										
					92113600	ø 305 x 26 x 63.5				92113700	ø 305 x 10 x 75.2	
										91071700	ø 195 x 30	
		325100								91071700	ø 195 x 30	
4.0	10/98→09/04	140 / 190										
		325200	Ate		2363101	[+] 23631 17.8	Teves	Ate		2333901	[–] 23339 17.1	
4.0 4x4	04/99→09/05	140 / 190										
4.7 V8 4x4	04/99→08/00	162 / 220	Ake		2408301	[+] 24083 19.2	Akebono			92113700	ø 305 x 10 x 75.2	
					92113600	ø 305 x 26 x 63.5				91071700	ø 195 x 30	
GRAND CHEROKEE III (WH, WK) 06/05→12/10													
		325300	Ake		2425001	[+] 24250 18.6						
3.0 CRD	06/05→12/10	160 / 218										
				PRO	92184503	ø 328 x 30 x 53						
		325400	Ake		2425001	[+] 24250 18.6		Kel		2425801	[+] 24258 17.9	
3.0 CRD 4x4	06/05→12/10	160 / 218										
3.0 CRD 4x4	05/06→12/10	155 / 211		PRO	92184503	ø 328 x 30 x 53			PRO	92177403	ø 320 x 14 x 66.2	⊕ rim size 16"
3.7 V6 4x4	06/05→12/10	157 / 214										
4.7 V8 4x4	06/05→12/10	170 / 231								91073300	ø 205 x 31	
5.7 V8 4x4	06/05→12/10	240 / 326										
5.7 V8 4x4	01/09→12/10	259 / 352										
5.7 V8 4x4	01/09→12/10	269 / 360										
		325500	Ake		2425001	[+] 24250 18.6		Bre		2407601	[+] 24076 14.8	
4.7 V8	09/07→12/08	223 / 303										
				PRO	92184503	ø 328 x 30 x 53				91073300	ø 205 x 31	
		325600	Bre		2407501	[+] 24075 17		Bre		2407601	[+] 24076 14.8	
6.1 SRT8 4x4	03/06→12/10	313 / 426										
GRAND CHEROKEE IV (WK, WK2) 11/10→													
		325700	Ate		2519001	[+] 25190 21.3	⊕ rim size 17"	Ate		2519601	[+] 25196 18	⊕ rim size 18"
3.0 CRD V6 4x4	02/11→	140 / 190										
3.0 CRD V6 4x4	02/11→	177 / 241	Ate		2519002	[+] 25190 19	⊕ rim size 18"			91078500	ø 205 x 32	
3.6 V6 4x4	11/10→	210 / 286										
3.6 V6 FlexFuel 4x4	11/10→	210 / 286										
5.7 V8 4x4	11/10→	259 / 352										
		325800	Ate		2519001	[+] 25190 21.3	⊕ reinf. susp. vented disc	Ate		2519601	[+] 25196 18	
6.4 SRT8 4x4	03/11→	344 / 468										
			Ate		2519002	[+] 25190 19	⊖ reinf. susp. vented disc			91078500	ø 205 x 32	
			Bre		2584901	[+] 25849 16.2	perf./vent. Disc					
GRAND CHEROKEE Mk II (WJ, WG) 10/98→09/05 → GRAND CHEROKEE II (WJ, WG), Page 510													
LIBERTY (KJ) 09/01→01/08 → CHEROKEE (KJ), Page 508													

LIBERTY (KK) 01/08→ → CHEROKEE (KK), Page 508

PATRIOT (MK74) 02/07→

		325900	Ake		2358403	[+] 23584 16	⊕ rim size 17"	Ake		2358202	[+] 23582 15.5	⊕ ABS
2.0	01/11→	115 / 156										
2.0 CRD	02/07→	103 / 140	Ake		2458301	[+] 24583 17	⊕ rim size 18"	Ake		2401401	[+] 24014 15.4	⊖ ABS
2.0 CRD 4x4	02/07→	103 / 140										
2.2 CRD 4x4	01/11→	120 / 163										
2.4	06/09→	125 / 170	Ake		82507300		⊕ rim size 18"			91076800	ø 228.6 x 37	⊖ ABS
2.4 4x4	01/08→	125 / 170										
2.4 Eco + 4x4	07/08→	125 / 170		PRO	92184403	ø 294 x 26.1 x 46			PRO	92177303	ø 302 x 10 x 60.5	⊕ ABS
										94036300	ø 228,5 x 46	⊖ ABS
										91073400	ø 170 x 32	⊕ ABS
		326000	Ake		2358403	[+] 23584 16	⊕ rim size 17"	Ake		2358202	[+] 23582 15.5	⊕ ABS
2.2 CRD 4x4	01/11→	100 / 136										
			Ake		2458301	[+] 24583 17	⊕ rim size 18"	Ake		2401401	[+] 24014 15.4	⊖ ABS
			Ake		82507300		⊕ rim size 18"			91076800	ø 228.6 x 37	⊖ ABS
				PRO	92184403	ø 294 x 26.1 x 46			PRO	92177303	ø 302 x 10 x 60.5	⊕ rim size 18"
										94036300	ø 228,5 x 46	⊖ ABS
										91073400	ø 170 x 32	⊕ ABS

WAGONEER (XJ) 10/84→09/01 → CHEROKEE (XJ), Page 508

WRANGLER II (TJ) 08/96→12/08

		326100	Kel		2182202	[–] 21822 17.2		Kel		2435501	[–] 24355 14	⊕ rear disc brake
2.4	11/02→04/07	105 / 143										
					92113500	ø 280 x 24 x 81.5				91056500	ø 228.6 x 66	→12/02
				PRO					PRO	92194003	ø 284.9 x 12 x 59.3	01/03→
		326200	Kel		2182202	[–] 21822 17.2				91056500	ø 228.6 x 66	→12/02
2.5	08/96→04/07	87 / 118										
					92113500	ø 280 x 24 x 81.5			PRO	92169403	ø 285 x 11 x 59.5	
		326300	Bos		2460401	[+] 24604 18.5						
2.8 CRDi	11/06→04/07	130 / 177										
		326400	Kel		2182202	[–] 21822 17.2				91056500	ø 228.6 x 66	
3.8	02/06→12/08	153 / 208										
4.0	06/98→04/07	124 / 169			92113500	ø 280 x 24 x 81.5						
		326500	Kel		2182202	[–] 21822 17.2				91056500	ø 228.6 x 66	→12/02
4.0	08/96→04/07	130 / 177										
					92113500	ø 280 x 24 x 81.5			PRO	92194003	ø 284.9 x 12 x 59.3	01/03→
		326600	Kel		2182202	[–] 21822 17.2				91056500	ø 228.6 x 66	
4.0	08/96→04/07	130 / 177										
					92113500	ø 280 x 24 x 81.5			PRO	92169403	ø 285 x 11 x 59.5	
		326700	Kel		2182202	[–] 21822 17.2			PRO	92194003	ø 284.9 x 12 x 59.3	
4.0 Rubicon	08/03→04/07	128 / 174										
					92113500	ø 280 x 24 x 81.5						

WRANGLER III (JK) 04/07→

		326800	Bos		2460402	[+] 24604 17.5	⊖ reinf. susp.	TRW		2460201	[+] 24602 16	
2.8 CRD	04/07→	130 / 177										
2.8 CRD	11/10→	147 / 200		PRO	92253303	ø 302 x 28 x 55	⊖ reinf. susp.			92227700	ø 316 x 12 x 77	
3.6 V6	10/11→	209 / 284										
3.8	04/07→	146 / 199								91073500	ø 207 x 32	

WRANGLER Mk II (TJ) 08/96→12/08 → WRANGLER II (TJ), Page 511

AMANTI (GH) 09/03→ → OPIRUS (GH), Page 518

AVELLA 11/95→12/01

		326900	Sum		2165404	[+] 21654 15				91056300	ø 200 x 32	
1.3	11/95→12/01	55 / 75										
1.5	02/97→12/01	55 / 75										

AVELLA Hatchback 11/95→12/01

		327000	Sum		2165404	[+] 21654 15				91056300	ø 200 x 32	
1.3	11/95→12/01	55 / 75										
1.5	02/97→12/01	55 / 75										

		kW / hp									
AVELLA Schrägheck 11/95→12/01 → AVELLA Hatchback, Page 511											
BESTA Box 01/93→07/99											
		327100	Ake	2000201	[+] 20002 15			91040100	ø 260 x 51	
2.2 D	02/96→	48 / 65	Sum	82047400				94035500	ø 260,0 x 63	
				92079600	ø 256 x 20 x 20	→10/97				
		327200	Ake	2000201	[+] 20002 15			94035500	ø 260,0 x 63	
2.7 D	01/93→07/99	60 / 82								
BESTA Kasten (TB) 10/97→ → PREGIO Box (TB), Page 519											
BESTA Kasten 01/93→07/99 → BESTA Box, Page 512											
BONGO Bus 10/03→											
		327300	Ake	2000201	[+] 20002 15			91050200	ø 220 x 56.5	
2.4 TDCi	10/03→	69 / 94								
2.7 D	10/03→	59 / 80								
2.9 TDiC	10/03→	90 / 122		92234700	ø 261 x 24 x 24			97016000		
BONGO Großraumlimousine 10/03→ → BONGO MPV, Page 512											
BONGO MPV 10/03→											
		327400	Ake	2000201	[+] 20002 15			91050200	ø 220 x 56.5	
2.4 TDCi	10/03→	69 / 94								
2.7 D	10/03→	59 / 80								
2.9 TDiC	10/03→	90 / 122		92234700	ø 261 x 24 x 24			97016000		
2.9 TDiC 4WD	10/03→	90 / 122								
BONGO Platform/Chassis 10/03→											
		327500	Ake	2000201	[+] 20002 15			91050200	ø 220 x 56.5	
2.4 TDCi	10/03→	69 / 94								
2.9 TDiC	10/03→	90 / 122						97016000		
2.9 TDiC 4WD	10/03→	90 / 122								
BONGO Pritsche/Fahrgestell 10/03→ → BONGO Platform/Chassis, Page 512											
BORREGO 11/07→											
		327600		TPM0008				TPM0008		
3.0 CRDi 4WD	11/07→	184 / 250								
3.0 CRDi 4WD	01/11→	191 / 260								
3.8	09/08→12/09	206 / 280								
3.8 4WD	06/08→	202 / 275								
3.8 4WD	09/08→12/09	206 / 280								
4.6	09/08→12/10	251 / 341								
4.6 4WD	06/08→	250 / 340								
CADENZA 01/10→											
		327700		2520501	[+] 25205 17.5		Ake	2533701	[+] 25337 15.7	
2.4 GDI	01/10→	132 / 180								
2.7	01/10→	147 / 200		TPM0008				TPM0008		
2.7 BiFuel	01/10→	121 / 165								
3.0 GDI	01/10→	175 / 238								
3.0 GDI	01/10→	199 / 271								
3.3 GDI	01/10→	216 / 294								
3.5 CVVT	01/10→	213 / 290								
CARENS I (FC) 03/00→07/02											
		327800	Sum	2387301	[+] 23873 15		Sum	2345501	[o] 23455 13	
1.8 i	03/00→05/02	81 / 110		92104200	ø 258 x 24 x 48.5			92104300	ø 261 x 10 x 40	
		327900	Sum	2387301	[+] 23873 15		Sum	2345501	[o] 23455 13	⊕ ABS
1.8 i	11/00→07/02	81 / 110	Sum	82510400				82501000		
				92104200	ø 258 x 24 x 48.5			91075500	ø 228 x 30	⊖ ABS
								97038200		
								92104300	ø 261 x 10 x 40	⊕ ABS
								94034500	ø 228,6 x 37	⊖ ABS
		328000	Sum	2387301	[+] 23873 15		Sum	2345501	[o] 23455 13	⊕ ABS
2.0 GSX	10/01→06/02	100 / 136		92104200	ø 258 x 24 x 48.5			91075500	ø 228 x 30	⊖ ABS
								92104300	ø 261 x 10 x 40	⊕ ABS
CARENS II (FJ) 07/02→											
		328100	Man	2396601	[+] 23966 16.4		Sum	2345501	[o] 23455 13	⊕ ABS
1.6	07/02→	77 / 105								
1.8	07/02→	93 / 126	Man	82073000				82501000		⊕ ABS
2.0 CRDi	07/02→	83 / 113								
2.0 CRDi	11/05→	103 / 140		92131700	ø 280 x 26.3 x 48.8			91067300	ø 228.6 x 32	⊖ ABS
2.0 CVVT	08/04→	102 / 139						97038200		⊖ ABS

		kW / hp											
CARENS II (FJ) 07/02→													
		328100											
1.6	07/02→	77 / 105											
1.8	07/02→	93 / 126											
2.0 CRDi	07/02→	83 / 113											
2.0 CRDi	11/05→	103 / 140											
2.0 CVVT	08/04→	102 / 139											
										92104300	ø 261 x 10 x 40	⊕ ABS	
		328200		2450101	[+] 24501 16.6					2449101	[+] 24491 16		
2.0	01/09→	111 / 151	Man	82073000			Man			82074000			
			PRO	92133903	ø 280 x 26 x 47.4				PRO	92185803	ø 275 x 10 x 61.5		
										TPM0008			
										91076400	ø 170 x 32		
CARENS III (UN) 05/06→													
		328300		2450101	[+] 24501 16.6					2449101	[+] 24491 16		
1.6 CRDi 110	10/10→	85 / 116	Man	82073000			Man			82074000			
2.4 CVVT	05/06→12/12	120 / 163	PRO	92133903	ø 280 x 26 x 47.4				PRO	92185803	ø 275 x 10 x 61.5		
										TPM0008			
										91076400	ø 170 x 32		
		328400		2450101	[+] 24501 16.6					2449101	[+] 24491 16		
1.6 CRDi 128	10/10→	94 / 128											
1.6 CVVT	08/09→	97 / 132											
1.6 CVVT	10/10→	93 / 126	Man	82073000			Man			82074000			
2.0 CRDi 115	05/07→	85 / 115											
2.0 CRDi 135	08/09→	100 / 136	PRO	92133903	ø 280 x 26 x 47.4				PRO	92185803	ø 275 x 10 x 61.5		
2.0 CRDi 140	09/06→	103 / 140											
2.0 CVVT	09/06→	106 / 144								91076400	ø 170 x 32		
CARENS IV 03/13→													
		328500		2575701	[+] 25757 17.8		Ake			2533701	[+] 25337 15.7		
1.6	03/13→	99 / 135											
1.7 CRDi	03/13→	85 / 116											
1.7 CRDi	03/13→	100 / 136		92166500	ø 300 x 28 x 47.2					TPM0008			
2.0	03/13→	130 / 177											
2.0 GDi	03/13→	122 / 166		TPM0008									
CARENS Mk II (FJ) 07/02→ → CARENS II (FJ), Page 512													
CARNIVAL / GRAND CARNIVAL III (VQ) 09/05→													
		328600		2459701	[+] 24597 17.6		Man			2459901	[+] 24599 15.5		
2.2 CRDi	01/10→	110 / 150											
2.2 CRDi	01/10→	143 / 194		82074300						82076000			
2.7 V6	06/06→	139 / 189											
2.9 CRDi	06/06→	136 / 185											
2.9 CRDi LX	09/06→	141 / 192		92164500	ø 300 x 28 x 54					92161800	ø 324 x 12 x 69.5		
3.8	09/05→	195 / 265											
3.8	01/10→	182 / 246								91072700	ø 210 x 39.7		
3.8	06/10→	202 / 275											
		328700		2459701	[+] 24597 17.6		Man			2459901	[+] 24599 15.5		
2.9 CRDi	09/05→	118 / 160											
				92164500	ø 300 x 28 x 54					92161800	ø 324 x 12 x 69.5		
										91072700	ø 210 x 39.7		
CARNIVAL I (UP) 08/99→10/01													
		328800	Sum	2364901	[+] 23649 16.2					91056000	ø 250 x 57		
2.5 i	10/00→10/01	132 / 180		92146900	ø 274 x 26 x 48.6					94030500	ø 254 x 64.5		
		328900	Kel	2182202	[–] 21822 17.2	Kelsey Hayes →11/99				91056000	ø 250 x 57		
2.5 V6	08/99→10/01	121 / 165	Sum	2364901	[+] 23649 16.2	Sumitomo 11/99→				97030800			
2.9 TD	08/99→10/01	93 / 126		92114900	ø 274 x 24 x 47.4	→05/00	Ben			97033900			
				92146900	ø 274 x 26 x 48.6	06/00→				94031600	ø 250 x 69.5		
CARNIVAL II (GQ) 01/99→10/06													
		329000	Sum	2364901	[+] 23649 16.2	→11/03				91056000	ø 250 x 57		
2.4	12/01→10/06	109 / 148											
2.5 V6	10/01→	110 / 150	Sum	2456501	[+] 24565 16.2	12/03→				97030800			
2.5 V6	10/01→	132 / 180											
2.9 CRDi	10/01→	106 / 144		82074300			Ben			97033900			
2.9 TD	01/99→	93 / 126											

		kW / hp											
CARNIVAL II (GQ) 01/99→10/06													
		329000											
2.4	12/01→10/06	109 / 148			92146900	ø 274 x 26 x 48.6				94031600	ø 250 x 69.5	→11/03	
2.5 V6	10/01→	110 / 150											
2.5 V6	10/01→	132 / 180			TPM0006					94030500	ø 254 x 64.5	12/03→	
2.9 CRDi	10/01→	106 / 144											
2.9 TD	01/99→	93 / 126											
		329100	Sum		2456501	[+] 24565 16.2				91056000	ø 250 x 57		
2.7	07/04→10/06	124 / 169			82074300					97030800			
					92146900	ø 274 x 26 x 48.6		Ben		97033900			
					TPM0006					94030500	ø 254 x 64.5		
		329200	Sum		2364901	[+] 23649 16.2				91065800	ø 295 x 53	12/03→	
3.5	07/02→	143 / 194			92146900	ø 274 x 26 x 48.6	→11/03			97030800			
CEE`D Sportswagon 09/12→													
		329300	Sum		2491501	[+] 24915 17.3	16" -brake	Ake		2533701	[+] 25337 15.7	⊕ elect. handbr.	
1.4 CRDi	09/12→	66 / 90											
1.4 CVVT	09/12→	73 / 100			92166200	ø 300 x 28 x 47.4	16" -brake		PRO	92252703	ø 284 x 10 x 25.8	⊕ elect. handbr.	
1.6 CRDi	09/12→	94 / 128											
1.6 CRDi	03/13→	81 / 110		PRO	92243103	ø 280 x 23 x 44.4	15" -brake						
1.6 GDI	09/12→	99 / 135											
CEE'D 05/12→													
		329400	Sum		2491501	[+] 24915 17.3	16" -brake	Ake		2533701	[+] 25337 15.7	⊕ elect. handbr.	
1.4 CRDi 90	05/12→	66 / 90											
1.4 CVVT	05/12→	66 / 90			92166200	ø 300 x 28 x 47.4	16" -brake		PRO	92252703	ø 284 x 10 x 25.8	⊕ elect. handbr.	
1.4 CVVT	05/12→	73 / 100											
1.6 CRDi 115	05/12→	85 / 115		PRO	92243103	ø 280 x 23 x 44.4	15" -brake						
1.6 CRDi 128	05/12→	94 / 128											
1.6 CRDi 90	05/12→	66 / 90											
1.6 CVVT	05/12→	92 / 125											
1.6 GDI	05/12→	99 / 135											
		329500	Man		2396601	[+] 23966 16.4	→30-08-2012	Man		2432001	[+] 24320 15.9	→30-08-2012	
1.6 CRDi 110	05/12→	81 / 110		PRO	92133903	ø 280 x 26 x 47.4	→30-08-2012			TPM0008			
					TPM0008					91068100	ø 172 x 27		
CEE'D Hatchback (ED) 12/06→													
		329600	Man		2396601	[+] 23966 16.4		Man		2432001	[+] 24320 15.9		
1.4	12/06→	77 / 105											
1.4	12/06→	80 / 109	Man		82073000			Man		82074000			
1.4 CVVT	06/10→	66 / 90											
1.6	12/06→	90 / 122		PRO	92161603	ø 280 x 26 x 47.2				92161700	ø 262 x 10 x 61.1		
1.6	09/07→	85 / 115											
1.6	02/08→	93 / 126							PRO	92161703	ø 262 x 10 x 61.1		
1.6 CRDi 115	12/06→	85 / 115											
1.6 CRDi 128	10/10→	94 / 128								91068100	ø 172 x 27		
1.6 CRDi 90	12/06→	66 / 90											
1.6 CVVT	10/10→	92 / 125								97036600			
2.0 CRDi	06/07→	100 / 136											
		329700	Man		2396601	[+] 23966 16.4		Man		2432001	[+] 24320 15.9		
2.0	12/06→	105 / 143											
2.0 CRDi 140	09/07→	103 / 140	Man		82073000			Man		82074000			
					92166200	ø 300 x 28 x 47.4				92161700	ø 262 x 10 x 61.1		
									PRO	92161703	ø 262 x 10 x 61.1		
										91068100	ø 172 x 27		
										97036600			
CEE'D Schrägheck (ED) 12/06→ → CEE'D Hatchback (ED), Page 514													
CEE'D SW (ED) 09/07→													
		329800	Man		2396601	[+] 23966 16.4		Man		2432001	[+] 24320 15.9		
1.4	09/07→	80 / 109											
1.4	10/10→	77 / 105	Man		82073000			Man		82074000			
1.4 CVVT	10/10→	66 / 90											
1.6	09/07→	85 / 115		PRO	92161603	ø 280 x 26 x 47.2				92161700	ø 262 x 10 x 61.1		
1.6	09/07→	90 / 122											
1.6	09/07→	93 / 126							PRO	92161703	ø 262 x 10 x 61.1		
1.6 CRDi 115	09/07→	85 / 115											
1.6 CRDi 128	10/10→	94 / 128								91068100	ø 172 x 27		
1.6 CRDi 90	09/07→	66 / 90											
1.6 CVVT	06/09→	92 / 125								97036600			

kW / hp													
CEE'D SW (ED) 09/07→													
329900													
2.0 09/07→ 105 / 143	Man		2396601	[+] 23966 16.4			Man		2432001	[+] 24320 15.9			
2.0 CRDi 140 09/07→ 103 / 140	Man		82073000				Man		82074000				
			92166200	ø 300 x 28 x 47.4					92161700	ø 262 x 10 x 61.1			
		PRO						PRO	92161703	ø 262 x 10 x 61.1			
									91068100	ø 172 x 27			
									97036600				
CERATO (LD) 04/04→12/09													
330000													
1.5 CRDi 07/05→ 75 / 102	Man		2421801	[+] 24218 17.2			Sum		2155301	[+] 21553 14			
1.6 07/04→ 77 / 105	Man		82072600				Man		82073100				
1.6 05/06→ 90 / 122			92136700	ø 275 x 26 x 47.3					92134300	ø 258 x 10 x 41.3			
1.6 CRDi 06/05→ 85 / 115													
1.8 08/05→ 93 / 126													
2.0 04/04→ 105 / 143													
2.0 CRDi 04/04→ 83 / 112													
330100													
1.6 05/06→06/08 93 / 126	Man		2421801	[+] 24218 17.2			Sum		2155301	[+] 21553 14			
2.0 09/07→12/09 103 / 140			92136700	ø 275 x 26 x 47.3					92134300	ø 258 x 10 x 41.3			
			TPM0008						TPM0008				
CERATO II (TD) 01/09→													
330200													
1.6 02/09→ 91 / 124	Man		82073000		2010-08→ →2013-03-31		Man		82074000		→2010-08 ⊕ rear disc brake		
		PRO	92161603	ø 280 x 26 x 47.2	→2013-03-31		Luc		82074100		2010-08→ →2013-03-31 ⊕ rear disc brake		
			TPM0008		→2013-03-31				TPM0008		→2013-03-31		
330300													
2.0 01/09→ 115 / 156	Man		82073000		2010-08→ →2013-03-31		Man		82074000		→2010-08 ⊕ rear disc brake		
		PRO	92161603	ø 280 x 26 x 47.2	→2013-03-31		Luc		82074100		2010-08→ →2013-03-31 ⊕ rear disc brake		
			TPM0008		→2013-03-31				TPM0008		→2013-03-31		
									94030200	ø 180 x 36	→2013-03-31 ⊕ rear drum brake		
CERATO II Saloon (TD) 01/09→													
330400													
1.6 01/10→ 90 / 122	Man		82073000		2010-08→ →2013-03-31		Man		82074000		→2010-08 ⊕ rear disc brake		
1.6 01/10→ 93 / 126		PRO	92161603	ø 280 x 26 x 47.2	→2013-03-31		Luc		82074100		2010-08→ →2013-03-31 ⊕ rear disc brake		
1.6 CVVT 02/09→ 91 / 124			TPM0008		→2013-03-31				TPM0008		→2013-03-31		
330500		PRO	92161603	ø 280 x 26 x 47.2					94030200	ø 180 x 36	⊕ rear drum brake		
2.0 01/09→ 115 / 156													
330600		PRO	92161603	ø 280 x 26 x 47.2					TPM0008				
2.0 07/10→ 116 / 158			TPM0008										
CERATO II Stufenheck (TD) 01/09→ → CERATO II Saloon (TD), Page 515													
CERATO KOUP (TD) 01/09→													
330700		PRO	92161603	ø 280 x 26 x 47.2			Man		82074000		→2010-08		
1.6 CVVT 10/09→ 91 / 124							Luc		82074100		2010-08→		
330800		PRO	92161603	ø 280 x 26 x 47.2					94030200	ø 180 x 36	⊕ rear drum brake		
2.0 01/09→ 115 / 156													
CERATO Saloon (LD) 04/04→12/07													
330900													
1.5 CRDi 07/05→ 75 / 102	Man		2421801	[+] 24218 17.2			Sum		2155301	[+] 21553 14			
1.6 04/04→ 77 / 105	Man		82072600				Man		82073100				
1.6 05/06→ 90 / 122			92136700	ø 275 x 26 x 47.3					92134300	ø 258 x 10 x 41.3			
1.6 CRDi 06/05→ 85 / 115													
2.0 04/04→ 105 / 143													
2.0 CRDi 04/04→ 83 / 112													
331000													
1.6 05/06→01/07 90 / 122	Man		2421801	[+] 24218 17.2			Sum		2155301	[+] 21553 14			
2.0 09/05→12/07 103 / 140			92136700	ø 275 x 26 x 47.3					92134300	ø 258 x 10 x 41.3			
			TPM0008						TPM0008				
CERATO Stufenheck (LD) 04/04→12/07 → CERATO Saloon (LD), Page 515													

		kW / hp												
CLARUS (K9A) 07/96→														
331100			Ate		**2345001**	[+] 23450 18.3		Sum		**2345501**	[o] 23455 13	⊕ ABS
1.8 i 16V	07/96→	85 / 116										
2.0 i 16V	07/96→	98 / 133	Sum		**2387301**	[+] 23873 15				**82501000**		⊕ ABS
			Sum		**82510400**					**91075500**	ø 228 x 30	⊖ ABS
			Ate		**82030600**					**92104300**	ø 261 x 10 x 40	⊕ ABS
					92104200	ø 258 x 24 x 48.5				**94034500**	ø 228,6 x 37	⊖ ABS
331200			Ate		**2345001**	[+] 23450 18.3		Sum		**2345501**	[o] 23455 13	
2.0 i 16V	07/96→	109 / 148			**92104200**	ø 258 x 24 x 48.5				**92104300**	ø 261 x 10 x 40	
CLARUS Estate (GC) 05/98→														
331300			Ate		**2345001**	[+] 23450 18.3		Sum		**2345501**	[o] 23455 13	⊕ ABS
1.8 i 16V	05/98→	85 / 116										
2.0 i 16V	05/98→	98 / 133	Sum		**2387301**	[+] 23873 15				**82501000**		⊕ ABS
			Sum		**82510400**					**91075500**	ø 228 x 30	⊖ ABS
			Ate		**82030600**					**92104300**	ø 261 x 10 x 40	⊕ ABS
					92104200	ø 258 x 24 x 48.5				**94034500**	ø 228,6 x 37	⊖ ABS
CLARUS Kombi (GC) 05/98→ → CLARUS Estate (GC), Page 516														
CREDOS (K9A) 07/96→ → CLARUS (K9A), Page 516														
CREDOS Saloon (K9A) 07/96→ → CLARUS (K9A), Page 516														
CREDOS Stufenheck (K9A) 07/96→ → CLARUS (K9A), Page 516														
FORTE II (TD) 01/09→ → CERATO II (TD), Page 515														
FORTE II Saloon (TD) 01/09→ → CERATO II Saloon (TD), Page 515														
FORTE II Stufenheck (TD) 01/09→ → CERATO II Saloon (TD), Page 515														
FORTE KOUP (TD) 01/09→ → CERATO KOUP (TD), Page 515														
GRAND CARNIVAL III (VQ) 09/05→ → CARNIVAL / GRAND CARNIVAL III (VQ), Page 513														
JOICE 02/00→														
331400			Sum		**2172501**	[+] 21725 17		Man		**2360801**	[+] 23608 15	⊕ ABS
2.0	02/00→	102 / 139	Sum		**82052100**			Luc		**97003800**		⊖ ABS
					92082900	ø 256 x 24 x 45.5	→11/00			**92104000**	ø 262 x 10 x 61.6	⊕ ABS
					92103900	ø 256 x 24 x 45	→11/00					
331500			Sum		**2172501**	[+] 21725 17		Man		**2360801**	[+] 23608 15	⊕ ABS
2.0	09/01→	88 / 120	Sum		**82052100**			Luc		**97003800**		⊖ ABS
										92104000	ø 262 x 10 x 61.6	⊕ ABS
K3 (TD) 01/09→ → CERATO KOUP (TD), Page 515														
K3 II (TD) 01/09→ → CERATO II (TD), Page 515														
K3 II Stufenheck (TD) 01/09→ → CERATO II Saloon (TD), Page 515														
K5 09/10→12/13 → OPTIMA, Page 518														
K7 01/10→ → CADENZA, Page 512														
K2500 (SD) 01/03→														
331600			Sum		**2378401**	[+] 23784 15.5				**94037200**	ø 220,1 x 69.5	
2.5 D	01/03→	69 / 94	Sum		**82047400**							
					82511800							
					92234700	ø 261 x 24 x 24						
K2500 Platform/Chassis (SD) 01/03→ → K2500 (SD), Page 516														
K2500 Pritsche/Fahrgestell (SD) 01/03→ → K2500 (SD), Page 516														
K2700 (K62W) 03/97→09/99														
331700			Sum		**2378401**	[+] 23784 15.5				**91050200**	ø 220 x 56.5	
2.7 D	03/97→09/99	61 / 83	Sum		**82047400**					**97016000**		

		kW / hp									
K2700 (K62W) 03/97→09/99											
		331700									
2.7 D	03/97→09/99	61 / 83		82511800							
K2700 (SD) 10/99→											
		331800	Sum	2378401	[+] 23784 15.5			94037200	ø 220,1 x 69.5		
2.7 D	10/99→	59 / 80	Sum	82047400							
				82511800							
				92234700	ø 261 x 24 x 24						
K2700 Platform/Chassis (K62W) 03/97→09/99 → K2700 (K62W), Page 516											
K2700 Platform/Chassis (SD) 10/99→ → K2700 (SD), Page 517											
K2700 Pritsche/Fahrgestell (K62W) 03/97→09/99 → K2700 (K62W), Page 516											
K2700 Pritsche/Fahrgestell (SD) 10/99→ → K2700 (SD), Page 517											
K2900 01/08→											
		331900	Sum	2378401	[+] 23784 15.5			91050200	ø 220 x 56.5		
2.9 D	01/08→	92 / 125		82511800							
				92234700	ø 261 x 24 x 24						
LOTZE (MG) 09/05→12/10 → MAGENTIS (MG), Page 517											
MAGENTIS (GD) 09/00→12/01											
		332000	Man	2389101	[+] 23891 16.9	09/02→	Man	2354301	[+] 23543 15		
2.0	05/01→	100 / 136		92136600	ø 280 x 26 x 47.3		Man	82072300			
2.5 V6	05/01→	124 / 169						92130900	ø 262 x 10 x 61	⊕ ABS →09/02	
								91070300	ø 168 x 32	⊕ ABS →09/02	
								97038900		⊕ ABS →09/02	
		332100	Sum	2172501	[+] 21725 17		Man	2354301	[+] 23543 15	⊕ rear disc brake	
2.5	09/00→12/01	127 / 173		92136600	ø 280 x 26 x 47.3	2001-06-22→		92130900	ø 262 x 10 x 61	⊕ rear disc brake	
				TPM0008				TPM0008		⊕ rear disc brake	
								91070300	ø 168 x 32		
		332200	Man	2458601	[+] 24586 17.8		Man	2354301	[+] 23543 15		
2.7 V6	04/04→	132 / 180					Man	82072300			
MAGENTIS (MG) 09/05→12/10											
		332300	Man	2458601	[+] 24586 17.8		Man	2354301	[+] 23543 15		
2.0	11/05→	106 / 144									
2.0	07/09→	121 / 165		PRO 92133903	ø 280 x 26 x 47.4		Man	82072300			
2.0 CRDi	04/06→	103 / 140									
2.0 CRDi	04/06→	110 / 150						PRO 92156803	ø 262 x 10 x 61.2		
2.4	08/06→	119 / 162									
2.7	11/05→	138 / 188						91070700	ø 167 x 27		
2.7 V6	07/09→	142 / 193									
		332400	Man	2458601	[+] 24586 17.8			PRO 92156803	ø 262 x 10 x 61.2	→2007-10	
2.7	09/05→12/09	127 / 173	Man	82515800				TPM0008			
				PRO 92133903	ø 280 x 26 x 47.4			91070700	ø 167 x 27		
				TPM0008							
		332500	Man	2458601	[+] 24586 17.8	→2010-04		PRO 92156803	ø 262 x 10 x 61.2	→2007-10	
2.7	11/05→12/10	145 / 197	Man	82515800		→2010-04		TPM0008		→2010-04	
				PRO 92133903	ø 280 x 26 x 47.4	→2010-04		91070700	ø 167 x 27	→2010-04	
				TPM0008		→2010-04					
MAGENTIS Saloon (MG) 09/05→12/10 → MAGENTIS (MG), Page 517											
MAGENTIS Stufenheck (MG) 09/05→12/10 → MAGENTIS (MG), Page 517											
MENTOR / SHUMA (FB) 10/97→12/01 → SHUMA (FB), Page 522											

		kW / hp											
MENTOR Saloon (FA) 08/97→05/00 → SEPHIA Saloon (FA), Page 522													
MENTOR Saloon (FB) 10/97→10/01 → SHUMA Saloon (FB), Page 523													
MENTOR Stufenheck (FA) 08/97→05/00 → SEPHIA Saloon (FA), Page 522													
MENTOR Stufenheck (FB) 10/97→10/01 → SHUMA Saloon (FB), Page 523													
MOHAVE 11/07→ → BORREGO, Page 512													
MORNING (TA) 05/11→ → PICANTO (TA), Page 519													
OPIRUS (GH) 09/03→													
		332600	Man		**2372601**	[+] 23726	16.5		Man		**2354301**	[+] 23543	15	Mando
2.7	10/03→09/06	120 / 163												
2.7	10/06→	139 / 189	Man		**82072100**				Ake		**2493401**	[+] 24934	15.5	Akebono
3.3	10/06→	173 / 235												
3.8 V6	10/06→	196 / 267							Man		**82072300**			
											91076300	ø 190 x 40		
		332700	Man		**2372601**	[+] 23726	16.5		Man		**2354301**	[+] 23543	15	Mando
3.5	09/03→	149 / 203												
			Man		**82072100**				Ake		**2493401**	[+] 24934	15.5	Akebono
									Man		**82072300**			
				PRO	**92244403**	ø 283 x 10 x 70								
					91076300	ø 190 x 40								
OPTIMA / MAGENTIS (GD) 09/00→12/01 → MAGENTIS (GD), Page 517													
OPTIMA (MG) 09/05→12/10 → MAGENTIS (MG), Page 517													
OPTIMA 09/10→12/13													
		332800	Sum		**2491501**	[+] 24915	17.3	Ø 320 mm	Ake		**2533701**	[+] 25337	15.7	⊕ elect. handbr.
1.7 CRDi	03/12→	100 / 136												
2.0	09/10→	204 / 277			**2564401**	[+] 25644	17.7	Ø 300 mm	Ake		**2564701**	[+] 25647	15.7	⊖ elect. handbr.
2.0	03/12→	125 / 170												
2.0 CVVL	03/12→	121 / 165												
2.0 CVVT Hybrid	03/12→	110 / 150			**92166500**	ø 300 x 28 x 47.2					**TPM0008**			
2.0 CVVT Hybrid	12/12→	140 / 190												
2.4	09/10→	149 / 203		PRO	**92237803**	ø 320 x 28 x 47.4								
2.4	03/12→	132 / 179												
2.4 Hybrid	09/11→	154 / 209			**TPM0008**									
		332900	Sum		**2491501**	[+] 24915	17.3	⊕ light alloy rim 2011-08→ →2013-07	Ake		**2533701**	[+] 25337	15.7	⊕ light alloy rim ⊕ elect. handbr. →2013-07
2.4	09/10→12/13	142 / 193			**2564401**	[+] 25644	17.7	2010-11→ →2013-07	Ake		**2564701**	[+] 25647	15.7	→2013-07 ⊖ elect. handbr.
					TPM0008						**TPM0008**			→2013-07
		333000	Sum		**2491501**	[+] 24915	17.3	⊕ light alloy rim →2013-07	Ake		**2533701**	[+] 25337	15.7	⊕ light alloy rim ⊕ elect. handbr. →2013-07
2.4	09/11→	148 / 201			**2564401**	[+] 25644	17.7	→2013-07	Ake		**2564701**	[+] 25647	15.7	→2013-07 ⊖ elect. handbr.
					TPM0008						**TPM0008**			→07.2013
OPTIMA Saloon (GD) 09/00→12/01 → MAGENTIS (GD), Page 517													
OPTIMA Stufenheck (GD) 09/00→12/01 → MAGENTIS (GD), Page 517													
PICANTO (BA) 04/04→													
		333100	Man		**2427501**	[+] 24275	16.8		Man		**2427601**	[+] 24276	14.8	⊕ ABS
1.0	04/04→	45 / 61												
1.0	11/09→	46 / 63			**82502400**						**82512600**			⊕ ABS
1.1	04/04→	48 / 65												
					92147100	ø 241 x 18 x 48.7					**91072900**	ø 180 x 32		⊖ ABS
											97033600			⊖ ABS
											92147200	ø 234 x 10 x 37.5		⊕ ABS
		333200	Man		**2427501**	[+] 24275	16.8		Man		**2427601**	[+] 24276	14.8	⊕ ABS
1.1 CRDi	11/05→	55 / 75												
					82502400						**82512600**			⊕ ABS
					92196500	ø 252 x 18 x 48.7					**91072900**	ø 180 x 32		⊖ ABS
											97033600			⊖ ABS
											92147200	ø 234 x 10 x 37.5		⊕ ABS

		kW / hp											
PICANTO (TA) 05/11→													
		333300	Man		2536501	[+] 25365 16.6		Man		2427601	[+] 24276 14.8	⊕ rear disc brake ⊖ EU
1.0	05/11→	51 / 69										
1.0 Bi-Fuel	05/11→	60 / 82			82502400			Man		2567701	[+] 25677 15.9	⊕ rear disc brake ⊕ EU
1.0 LPG	08/13→	49 / 67										
1.2	09/11→	63 / 85			92147100	ø 241 x 18 x 48.7		Luc		82074100		⊕ rear disc brake
1.2	01/13→	65 / 88								92147200	ø 234 x 10 x 37.5	⊕ rear disc brake
		333400	Man		2536501	[+] 25365 16.6		Man		2427601	[+] 24276 14.8	⊕ rear disc brake
1.0 Flex	08/11→	59 / 80			82502400			Luc		82074100		⊕ rear disc brake
					92147100	ø 241 x 18 x 48.7				92147200	ø 234 x 10 x 37.5	⊕ rear disc brake
PREGIO Box (TB) 10/97→												
		333500	Sum		2364901	[+] 23649 16.2				91040100	ø 260 x 51	
2.5 TCi D	09/02→	69 / 94	Man		82072100					94035500	ø 260,0 x 63	→04/04
					92226400	ø 258 x 26 x 56						
		333600	Sum		2348401	[+] 23484 17	→01/99			91040100	ø 260 x 51	
2.7 D	10/97→	60 / 82	Sum		2364901	[+] 23649 16.2	02/99→			94035500	ø 260,0 x 63	→04/04
			Man		82072100							
					92226400	ø 258 x 26 x 56						
PREGIO Bus 08/95→09/04												
		333700	Sum		2348401	[+] 23484 17	→01/99			91040100	ø 260 x 51	
2.5 D	08/95→09/04	69 / 94	Sum		2364901	[+] 23649 16.2	02/99→			94035500	ø 260,0 x 63	→04/04
			Man		82072100							
					92226400	ø 258 x 26 x 56						
PREGIO Kasten (TB) 10/97→ → PREGIO Box (TB), Page 519												
PRIDE (DA) 01/90→												
		333800	Sum		2135501	[+] 21355 14.5				91039700	ø 170 x 26	
1.1 i	01/91→	38 / 52										
1.3 16V	01/90→	44 / 60	Sum		82056900					97007500		
1.3 16V	01/90→	53 / 72										
1.3 16V	10/96→	47 / 64			92116900	ø 219 x 13 x 37				94015800	ø 170,0 x 34.5	
1.3 i	01/90→	51 / 69										
		333900	Man		2431701	[+] 24317 17.5		Man		2432001	[+] 24320 15.9	⊕ ABS
1.4 LX	03/05→	71 / 97										
1.5 CRDi LX	03/05→	81 / 110	Man		82508500					91068900	ø 203 x 31.5	⊖ ABS
1.6 CVVT LX	03/05→	82 / 111										
					92164700	ø 256 x 22 x 46.5				97038800		⊖ ABS
				PRO	92164703	ø 256 x 22 x 46.5				92161300	ø 262 x 10 x 63.8	⊕ ABS
									PRO	92161303	ø 262 x 10 x 63.8	⊕ ABS
										94035900	ø 203,2 x 40.5	⊖ ABS
										91072500	ø 168 x 32	⊕ ABS
PRIDE Estate 08/99→												
		334000	Sum		2135501	[+] 21355 14.5				91039700	ø 170 x 26	
1.3	08/99→	47 / 64	Sum		82056900					97007500		
					92116900	ø 219 x 13 x 37				94015800	ø 170,0 x 34.5	
PRIDE Kombi 08/99→ → PRIDE Estate, Page 519												
PRIDE Van (DA) 10/96→06/99												
		334100	Sum		2135501	[+] 21355 14.5				91039700	ø 170 x 26	
1.3 16V	10/96→06/99	47 / 64	Sum		82056900					97007500		
					92116900	ø 219 x 13 x 37				94015800	ø 170,0 x 34.5	

		kW / hp											
PRO CEE´D 03/13→													
		334200	Sum		**2491501**	[+] 24915 17.3	16" -brake		Ake		**2533701**	[+] 25337 15.7	⊕ elect. handbr.
1.4 CRDi	03/13→	66 / 90											
1.4 CVVT	03/13→	73 / 100			**92166200**	ø 300 x 28 x 47.4	16" -brake			PRO	**92252703**	ø 284 x 10 x 25.8	⊕ elect. handbr.
1.6 CRDi	03/13→	94 / 128		PRO	**92243103**	ø 280 x 23 x 44.4	15" -brake						
1.6 GDI	03/13→	99 / 135											
		334300	Sum		**2491501**	[+] 24915 17.3	16" -brake		Ake		**2533701**	[+] 25337 15.7	⊕ elect. handbr.
1.6 CRDi	03/13→	81 / 110			**92166200**	ø 300 x 28 x 47.4	16" -brake			PRO	**92252703**	ø 284 x 10 x 25.8	⊕ elect. handbr.
				PRO	**92243103**	ø 280 x 23 x 44.4	15" -brake				**TPM0008**		
					TPM0008								
PRO CEE'D (ED) 02/08→													
		334400	Man		**2396601**	[+] 23966 16.4			Man		**2432001**	[+] 24320 15.9	
1.4	02/08→	77 / 105											
1.4	02/08→	80 / 109	Man		**82073000**				Man		**82074000**		
1.4 CVVT	06/10→	66 / 90											
1.6	02/08→	90 / 122		PRO	**92161603**	ø 280 x 26 x 47.2					**92161700**	ø 262 x 10 x 61.1	
1.6	02/08→	93 / 126								PRO	**92161703**	ø 262 x 10 x 61.1	
1.6 CRDi 115	02/08→	85 / 115											
1.6 CRDi 128	10/10→	94 / 128									**91068100**	ø 172 x 27	
1.6 CRDi 90	02/08→	66 / 90											
1.6 CVVT	10/10→	92 / 125									**97036600**		
2.0	02/08→	105 / 143											
2.0 CRDi 140	02/08→	103 / 140											
2.0 LPG	01/09→12/09	105 / 143											
PRO CEEŽD 03/13→ → PRO CEE´D, Page 520													
RETONA (CE) 06/99→													
		334500	Sum		**2344201**	[+] 23442 16					**91064100**	ø 260 x 46	
2.0 16V	05/00→	94 / 128											
2.0 TD	06/99→	61 / 83	Luc		**82511400**						**97038100**		
					92104400	ø 284 x 24 x 51.1					**94038500**	ø 260 x 60.4	
RIO II (JB) 03/05→12/11													
		334600	Man		**2431701**	[+] 24317 17.5			Man		**2432001**	[+] 24320 15.9	⊕ ABS
1.4 16V	03/05→	71 / 97											
1.5 CRDi	03/05→	81 / 110	Man		**82508500**				Man		**82074000**		⊕ ABS
1.6 CVVT	03/05→	82 / 112											
					92164700	ø 256 x 22 x 46.5					**91068900**	ø 203 x 31.5	⊖ ABS
				PRO	**92164703**	ø 256 x 22 x 46.5					**97038800**		⊖ ABS
											92161300	ø 262 x 10 x 63.8	⊕ ABS
										PRO	**92161303**	ø 262 x 10 x 63.8	⊕ ABS
											94035900	ø 203,2 x 40.5	⊖ ABS
											91072500	ø 168 x 32	⊕ ABS
		334700	Man		**2431701**	[+] 24317 17.5			Man		**2432001**	[+] 24320 15.9	⊕ rear disc brake
1.5 CRDi	06/08→	65 / 88											
					92164700	ø 256 x 22 x 46.5			Man		**82074000**		⊕ rear disc brake
				PRO	**92164703**	ø 256 x 22 x 46.5					**91068900**	ø 203 x 31.5	⊕ rear drum brake
					TPM0008						**92161300**	ø 262 x 10 x 63.8	⊕ rear disc brake
										PRO	**92161303**	ø 262 x 10 x 63.8	⊕ rear disc brake
											TPM0008		⊕ rear disc brake
											94035900	ø 203,2 x 40.5	⊕ rear drum brake
											91072500	ø 168 x 32	⊕ rear disc brake
		334800	Man		**2431701**	[+] 24317 17.5			Man		**2432001**	[+] 24320 15.9	⊕ rear disc brake
1.6	09/10→12/11	103 / 140											
					92164700	ø 256 x 22 x 46.5			Man		**82074000**		⊕ rear disc brake
				PRO	**92164703**	ø 256 x 22 x 46.5					**91068900**	ø 203 x 31.5	⊕ rear drum brake
					TPM0008						**92161300**	ø 262 x 10 x 63.8	⊕ rear disc brake
										PRO	**92161303**	ø 262 x 10 x 63.8	⊕ rear disc brake

→

		kW / hp											
RIO II (JB) 03/05→12/11													
		334800									TPM0008		
1.6	09/10→12/11	103 / 140									94035900	ø 203,2 x 40.5	⊕ rear drum brake
											91072500	ø 168 x 32	
RIO II Saloon (JB) 03/05→													
		334900	Man		2431701	[+] 24317 17.5		Man		2432001	[+] 24320 15.9	⊕ ABS	
1.4 16V	03/05→	71 / 97											
1.5 CRDi	03/05→	81 / 110											
1.6 16V	03/05→	82 / 112	Man		82508500			Man		82074000		⊕ ABS	
					92164700	ø 256 x 22 x 46.5				91068900	ø 203 x 31.5	⊖ ABS	
				PRO	92164703	ø 256 x 22 x 46.5				97038800		⊖ ABS	
										92161300	ø 262 x 10 x 63.8	⊕ ABS	
									PRO	92161303	ø 262 x 10 x 63.8	⊕ ABS	
										94035900	ø 203,2 x 40.5	⊖ ABS	
										91072500	ø 168 x 32	⊕ ABS	
RIO II Stufenheck (JB) 03/05→ → RIO II Saloon (JB), Page 521													
RIO III (UB) 09/11→													
		335000			2534801	[+] 25348 17.8		Ake		2533701	[+] 25337 15.7	⊕ rear disc brake	
1.1 CRDi	09/11→	55 / 75											
1.25 CVVT	09/11→	63 / 86											
1.25 CVVT	09/11→	65 / 88	Man		82517300		⊕ EU-made ⊕ RUS-made			91080800	ø 203 x 31.5	⊕ rear drum brake	
1.25 LPG	09/11→	63 / 86											
1.4 CRDi	09/11→	66 / 90		PRO	92237903	ø 256 x 22 x 43.8	14" -brake		PRO	92242203	ø 262 x 10 x 43.9	⊕ rear disc brake ⊕ EU-made ⊕ RUS-made	
1.4 CVVT	09/11→	79 / 107		PRO	92239303	ø 280 x 22 x 43.9	15" -brake ⊕ EU-made ⊖ F						
1.4 CVVT	09/11→	80 / 109											
		335100			2534801	[+] 25348 17.8		Ake		2533701	[+] 25337 15.7		
1.6	09/11→	103 / 140	Man		82517300				PRO	92242203	ø 262 x 10 x 43.9		
				PRO	92237903	ø 256 x 22 x 43.8				TPM0008			
					TPM0008								
		335200			2534801	[+] 25348 17.8		Ake		2533701	[+] 25337 15.7		
1.6 CVVT	06/12→	90 / 123	Man		82517300		⊕ EU-made ⊕ RUS-made		PRO	92242203	ø 262 x 10 x 43.9	⊕ EU-made ⊕ RUS-made	
				PRO	92237903	ø 256 x 22 x 43.8	14" -brake						
				PRO	92239303	ø 280 x 22 x 43.9	15" -brake ⊕ EU-made ⊖ F						
RIO III Saloon (UB) 09/10→													
		335300			2534801	[+] 25348 17.8		Ake		2533701	[+] 25337 15.7	⊕ rear disc brake	
1.25 CVVT	06/11→	65 / 88											
1.25 CVVT	10/11→	63 / 86	Man		82517300		⊕ EU-made ⊕ RUS-made			91080800	ø 203 x 31.5	⊕ rear drum brake	
1.4 CVVT	06/11→	79 / 107											
1.4 CVVT	10/11→	80 / 109		PRO	92237903	ø 256 x 22 x 43.8	14" -brake		PRO	92242203	ø 262 x 10 x 43.9	⊕ rear disc brake ⊕ EU-made ⊕ RUS-made	
				PRO	92239303	ø 280 x 22 x 43.9	15" -brake ⊕ EU-made ⊖ F						
		335400	Man		2431701	[+] 24317 17.5	→2011-12	Man		2432001	[+] 24320 15.9	→2011-12 ⊕ rear disc brake	
1.6	09/10→	103 / 140			2534801	[+] 25348 17.8	2011-12→	Ake		2533701	[+] 25337 15.7	2011-12→ ⊕ rear disc brake	
			Man		82517300		2011-12→	Man		82074000		→2011-12 ⊕ rear disc brake	
					92164700	ø 256 x 22 x 46.5	→2011-12			91068900	ø 203 x 31.5	→2011-09-26 ⊕ rear drum brake	
				PRO	92164703	ø 256 x 22 x 46.5	→2011-12			92161300	ø 262 x 10 x 63.8	→2011-12 ⊕ rear disc brake	
				PRO	92237903	ø 256 x 22 x 43.8	2011-12→		PRO	92161303	ø 262 x 10 x 63.8	→2011-12 ⊕ rear disc brake	
					TPM0008				PRO	92242203	ø 262 x 10 x 43.9	2011-12→ ⊕ rear disc brake	
										TPM0008			
										94035900	ø 203,2 x 40.5	→2011-09-26 ⊕ rear drum brake	
										91072500	ø 168 x 32	→2011-12	

		kW / hp										
RIO III Saloon (UB) 09/10→												
1.6 CVVT	06/12→	335500 90 / 123		2534801	[+] 25348 17.8		Ake	2533701	[+] 25337 15.7	
			Man	82517300		⊕ EU-made ⊕ RUS-made		PRO 92242203	ø 262 x 10 x 43.9	⊕ EU-made ⊕ RUS-made
				PRO 92237903	ø 256 x 22 x 43.8	14" -brake				
				PRO 92239303	ø 280 x 22 x 43.9	15" -brake ⊕ EU-made ⊖ F				
RIO III Stufenheck (UB) 09/10→ → RIO III Saloon (UB), Page 521										
RIO Estate (DC) 08/00→02/05										
1.3	08/00→02/05	335600 55 / 75	Sum	2165404	[+] 21654 15	→07/02		91061200	ø 200 x 26	→07/02
1.3	08/00→02/05	60 / 82								
1.5 16V	08/00→02/05	72 / 98	Sum	2387301	[+] 23873 15	08/02→		91065000	ø 200 x 31	08/02→
				92134200	ø 235 x 22 x 45.1	→08/02		94036500	ø 200,0 x 34	08/02→
				92147000	ø 254 x 24 x 50.7	08/02→				
1.5 16V	09/02→02/05	335700 71 / 97	Sum	2387301	[+] 23873 15			91065000	ø 200 x 31	
				92147000	ø 254 x 24 x 50.7			94036500	ø 200,0 x 34	
RIO Kombi (DC) 08/00→02/05 → RIO Estate (DC), Page 522										
RIO Saloon (DC_) 09/00→02/05										
1.3	09/00→02/05	335800 55 / 75	Sum	2165404	[+] 21654 15	→07/02		91061200	ø 200 x 26	→07/02
1.5 16V	09/00→02/05	72 / 98	Sum	2387301	[+] 23873 15	08/02→		91065000	ø 200 x 31	08/02→
				92134200	ø 235 x 22 x 45.1	→08/02		94036500	ø 200,0 x 34	08/02→
				92147000	ø 254 x 24 x 50.7	08/02→				
1.3	08/02→02/05	335900 60 / 82	Sum	2387301	[+] 23873 15			91065000	ø 200 x 31	
1.5	09/02→02/05	70 / 95								
1.5 16V	09/02→02/05	71 / 97		92147000	ø 254 x 24 x 50.7			94036500	ø 200,0 x 34	
RIO Stufenheck (DC_) 09/00→02/05 → RIO Saloon (DC_), Page 522										
RONDO III (UN) 05/06→ → CARENS III (UN), Page 513										
SEDONA I (UP) 08/99→10/01 → CARNIVAL I (UP), Page 513										
SEDONA III (VQ) 09/05→ → CARNIVAL / GRAND CARNIVAL III (VQ), Page 513										
SEDONA Mk II (GQ) 01/99→10/06 → CARNIVAL II (GQ), Page 513										
SEDONA Mk II (VQ) 09/05→ → CARNIVAL / GRAND CARNIVAL III (VQ), Page 513										
SEPHIA (FB) 10/97→10/01 → SHUMA Saloon (FB), Page 523										
SEPHIA (FB) 10/97→12/01 → SHUMA (FB), Page 522										
SEPHIA Saloon (FA) 08/97→05/00										
1.5 i	08/97→05/00	336000 74 / 101	Ate	2537401	[+] 25374 18.3		Ate	2183201	[–] 21832 15	⊕ rear disc brake
				92078500	ø 243 x 20 x 42.5			91056100	ø 200 x 36	⊕ rear drum brake
								92147500	ø 270 x 10 x 61.1	⊕ rear disc brake
								94028700	ø 200 x 41.5	⊕ rear drum brake
SEPHIA Stufenheck (FA) 08/97→05/00 → SEPHIA Saloon (FA), Page 522										
SHUMA (FB) 10/97→12/01										
1.5 i 16V	10/97→03/01	336100 65 / 88	Ate	2338401	[+] 23384 18		Sum	2345501	[o] 23455 13	⊕ rear disc brake
1.6	01/01→12/01	75 / 101	Ate	82029200				82501000		⊕ rear disc brake
1.8 i 16V	10/97→03/01	81 / 110	Ate	82062900				91056100	ø 200 x 36	⊕ rear drum brake
				92078500	ø 243 x 20 x 42.5			97014800		⊕ rear drum brake
								92162200	ø 261 x 10 x 40.3	⊕ rear disc brake
								94028700	ø 200 x 41.5	⊕ rear drum brake
SHUMA II (FB) 05/01→08/04										
1.6	05/01→08/04	336200 75 / 101	Sum	2387301	[+] 23873 15		Sum	2345501	[o] 23455 13	⊕ rear disc brake
1.8	04/03→08/04	84 / 114	Ate	82029200				82501000		⊕ rear disc brake

		kW / hp									
SHUMA II (FB) 05/01→08/04											
1.6	05/01→08/04	336200 75 / 101	Ate		82062900				91056100	ø 200 x 36	⊕ rear drum brake
1.8	04/03→08/04	84 / 114			92131100	ø 258 x 24 x 48.5			97014800		
									92162200	ø 261 x 10 x 40.3	
									94028700	ø 200 x 41.5	
1.8	05/01→06/04	336300 81 / 110	Sum		2387301	[+] 23873 15		Sum	2345501	[o] 23455 13	⊕ rear disc brake
					92131100	ø 258 x 24 x 48.5			91056100	ø 200 x 36	⊕ rear drum brake
									92162200	ø 261 x 10 x 40.3	⊕ rear disc brake
									94028700	ø 200 x 41.5	⊕ rear drum brake
SHUMA II Saloon (FB) 05/01→05/04											
1.6	05/01→05/04	336400 75 / 101	Sum		2387301	[+] 23873 15		Sum	2345501	[o] 23455 13	⊕ rear disc brake
			Ate		82029200				82501000		⊕ rear disc brake
			Ate		82062900				91056100	ø 200 x 36	⊕ rear drum brake
					92131100	ø 258 x 24 x 48.5			97014800		
									92162200	ø 261 x 10 x 40.3	
									94028700	ø 200 x 41.5	
SHUMA II Stufenheck (FB) 05/01→05/04 → SHUMA II Saloon (FB), Page 523											
SHUMA Saloon (FB) 10/97→10/01											
1.5 i 16V	10/97→10/01	336500 65 / 88	Ate		2338401	[+] 23384 18		Sum	2345501	[o] 23455 13	⊕ rear disc brake
1.8 GX	05/99→10/01	85 / 116	Ate		82029200				82501000		⊕ rear disc brake
			Ate		82062900				91056100	ø 200 x 36	⊕ rear drum brake
					92078500	ø 243 x 20 x 42.5			97014800		⊕ rear drum brake
									92162200	ø 261 x 10 x 40.3	⊕ rear disc brake
									94028700	ø 200 x 41.5	⊕ rear drum brake
SHUMA Stufenheck (FB) 10/97→10/01 → SHUMA Saloon (FB), Page 523											
SORENTO I (JC) 08/02→12/09											
2.4	08/02→	336600 102 / 139	Man		2406801	[+] 24068 17.3	⊕ USA	Man	2393101	[+] 23931 15	⊕ USA
2.5 CRDi	08/02→	103 / 140	Sum		2409201	[+] 24092 17.3	⊖ USA	Sum	2405801	[+] 24058 15.8	⊖ USA
3.5 V6	08/02→	143 / 194			82510900		⊖ USA	Sum	82511000		⊖ USA
				PRO	92147303	ø 302 x 28 x 54			92147400	ø 315 x 20 x 87.5	→09/06
									92205000	ø 315 x 20 x 78.5	09/06→
									91065700	ø 190 x 40	→11/06
									91075300	ø 190 x 40	12/06→
									97036200		→11/06
2.5 CRDi	05/06→	336700 120 / 163	Man		2406801	[+] 24068 17.3	⊕ USA	Man	2393101	[+] 23931 15	⊕ USA
2.5 CRDi	09/06→	131 / 178	Sum		2409201	[+] 24092 17.3	⊖ USA	Sum	2405801	[+] 24058 15.8	⊖ USA
3.8 4WD	09/06→	196 / 266			82510900		⊖ USA	Sum	82511000		⊖ USA
				PRO	92147303	ø 302 x 28 x 54			92205000	ø 315 x 20 x 78.5	
									91065700	ø 190 x 40	→11/06
									91075300	ø 190 x 40	12/06→
									97036200		→11/06
2.5 CRDi	12/06→	336800 125 / 170	Man		2406801	[+] 24068 17.3	⊕ USA	Man	2393101	[+] 23931 15	⊕ USA
3.3 V6	12/06→	177 / 241									
3.3 V6	11/07→	182 / 248									

kW / hp												
SORENTO I (JC) 08/02→12/09												
336800												
2.5 CRDi	12/06→	125 / 170	Sum		2409201	[+] 24092 17.3	⊖ USA	Sum		2405801	[+] 24058 15.8	⊖ USA
3.3 V6	12/06→	177 / 241			82510900		⊖ USA	Sum		82511000		⊖ USA
3.3 V6	11/07→	182 / 248		PRO	92147303	ø 302 x 28 x 54				92205000	ø 315 x 20 x 78.5	
										91075300	ø 190 x 40	
336900												
3.3 4WD	09/08→12/09	180 / 245	Sum		2409201	[+] 24092 17.3	→2009-08	Sum		2405801	[+] 24058 15.8	→08.2009
										92205000	ø 315 x 20 x 78.5	→2009-08
										91075300	ø 190 x 40	→2009-08
SORENTO II (XM) 11/09→												
337000			Man		2435101	[+] 24351 17.6				2552001	[+] 25520 15.5	
2.0 CRDi	11/10→	110 / 150										
2.0 CRDi 4WD	11/10→	110 / 150	Man		82502800			Man		82517400		
2.4	09/10→	131 / 178										
2.4 AWD	09/12→	131 / 178			TPM0008				PRO	92223403	ø 302 x 11 x 71.4	
2.4 CVVT	10/12→	141 / 192										
2.4 CVVT 4WD	10/12→	141 / 192								TPM0008		
2.4 GDI	10/12→	141 / 192										
2.4 GDI	09/13→	142 / 193										
2.4 GDI 4WD	10/12→	141 / 192										
2.4 GDI 4WD	09/13→	142 / 193										
3.5	05/13→	204 / 278										
3.5 4WD	01/11→	206 / 280										
337100			Man		2435101	[+] 24351 17.6				2552001	[+] 25520 15.5	
2.2 CRDi	11/09→	145 / 197										
2.2 CRDi	11/09→	147 / 200	Man		82502800			Man		82517400		06/10→
2.2 CRDi 4WD	11/09→	145 / 197										
2.2 CRDi 4WD	11/09→	147 / 200			TPM0008				PRO	92223403	ø 302 x 11 x 71.4	
2.4 CVVT	11/09→	128 / 174										
2.4 CVVT 4WD	11/09→	128 / 174								TPM0008		
3.5	11/09→	203 / 276										
3.5	11/09→	207 / 282										
3.5 4WD	11/09→	203 / 276								91079600	ø 189 x 31	→11/10
SOUL (AM) 02/09→12/10												
337200			Man		2389101	[+] 23891 16.9		Ake		2493401	[+] 24934 15.5	⊕ ESP
1.6	09/09→12/10	91 / 124										
2.0	09/09→12/10	106 / 144	Man		82071600		→2010-07			TPM0008		
			Man		82515800		2010-07→			94030200	ø 180 x 36	⊖ ESP
				PRO	92161603	ø 280 x 26 x 47.2				91070300	ø 168 x 32	⊕ ESP
					TPM0008							
337300			Man		2389101	[+] 23891 16.9		Ake		2493401	[+] 24934 15.5	⊕ ABS
1.6 CRDi 115	02/09→	85 / 115										
1.6 CRDi 128	02/09→	94 / 126	Man		82071600					82074700		⊕ ABS
1.6 CVVT	02/09→	77 / 105										
1.6 CVVT	02/09→	93 / 126		PRO	92161603	ø 280 x 26 x 47.2				94030200	ø 180 x 36	⊖ ABS
1.6 CVVT	03/12→	95 / 129										
1.6 Flex	01/11→	94 / 128								91070300	ø 168 x 32	⊕ ABS
1.6 GDI	06/11→	103 / 140										
2.0	02/09→	122 / 166										
337400			Man		2389101	[+] 23891 16.9		Ake		2493401	[+] 24934 15.5	⊕ rear disc brake
1.6 Flex	01/11→	96 / 130										
			Man		82515800					TPM0008		
				PRO	92161603	ø 280 x 26 x 47.2				94030200	ø 180 x 36	⊕ rear drum brake
					TPM0008							
SPECTRA5 (LD) 04/04→12/09 → CERATO (LD), Page 515												
SPECTRA II (FB) 05/01→08/04 → SHUMA II (FB), Page 522												
SPECTRA Stufenheck (LD) 04/04→12/07 → CERATO Saloon (LD), Page 515												
SPECTRA седан (LD) 04/04→12/07 → CERATO Saloon (LD), Page 515												
SPORTAGE (JE_) 09/04→												
337500			Man		2389101	[+] 23891 16.9	→29-04-2007	Man		2354301	[+] 23543 15	→29-04-2007
2.0 16V 4WD	09/04→	104 / 141										
2.0 CRDi 4WD	09/04→	83 / 113			2450101	[+] 24501 16.6	29-04-2007→	Man		2432001	[+] 24320 15.9	29-04-2007→
2.0 CRDi 4WD	01/06→	100 / 136										
2.0 CRDi 4WD	01/06→	103 / 140	Man		2389105	[+] 23891 17.8	→29-04-2007	Man		82072300		→29-04-2007
2.7 V6 4WD	09/04→	129 / 175										
			Man		82071600		→29-04-2007	Man		82074000		2007-04-29→
					82510900		29-04-2007→			92134000	ø 284 x 10.1 x 61.1	

		kW / hp										
SPORTAGE (JE_) 09/04→												
		337500										
2.0 16V 4WD	09/04→	104 / 141			92166500	ø 300 x 28 x 47.2	29-04-2007→			TPM0008		
2.0 CRDi 4WD	09/04→	83 / 113		PRO	92133903	ø 280 x 26 x 47.4	→29-04-2007			91066400	ø 190 x 40	
2.0 CRDi 4WD	01/06→	100 / 136			TPM0008							
2.0 CRDi 4WD	01/06→	103 / 140										
2.7 V6 4WD	09/04→	129 / 175										
		337600	Man		2389101	[+] 23891 16.9	→29-04-2007	Man		2354301	[+] 23543 15	→29-04-2007
2.0 CRDi	02/05→	83 / 113			2450101	[+] 24501 16.6	29-04-2007→	Man		2432001	[+] 24320 15.9	29-04-2007→
2.0 CRDi	01/06→	100 / 136	Man		2389105	[+] 23891 17.8	→29-04-2007	Man		82072300		→29-04-2007
2.0 CRDi	01/06→	103 / 140	Man		82071600		→29-04-2007	Man		82074000		29-04-2007→
2.0 i 16V	09/04→	104 / 141			82510900		29-04-2007→		PRO	92156803	ø 262 x 10 x 61.2	
					92166500	ø 300 x 28 x 47.2	29-04-2007→			TPM0008		
				PRO	92133903	ø 280 x 26 x 47.4	→29-04-2007			91068500	ø 167 x 27.5	
					TPM0008							
		337700			2450101	[+] 24501 16.6		Man		2432001	[+] 24320 15.9	
2.0 CRDi	09/08→	110 / 150			82510900			Man		82074000		
					92166500	ø 300 x 28 x 47.2			PRO	92156803	ø 262 x 10 x 61.2	
					TPM0008					TPM0008		
										91068500	ø 167 x 27.5	
		337800			2450101	[+] 24501 16.6		Man		2432001	[+] 24320 15.9	
2.0 CRDi 4WD	09/08→	110 / 150			82510900			Man		82074000		
					92166500	ø 300 x 28 x 47.2				92134000	ø 284 x 10.1 x 61.1	
					TPM0008					TPM0008		
										91066400	ø 190 x 40	
SPORTAGE (K00) 04/94→08/03												
		337900	Sum		2344201	[+] 23442 16				91055900	ø 250 x 57	
2.0	10/00→08/03	87 / 118			92104400	ø 284 x 24 x 51.1				97033800		
2.0 4WD	10/00→08/03	87 / 118								94030600	ø 250 x 68	
2.0 i 16V	10/99→08/03	94 / 128										
		338000	San		2189202	[+] 21892 18.4	→08/97			91055900	ø 250 x 57	
2.0 i 16V 4WD	04/94→08/03	94 / 128	Ate		2537401	[+] 25374 18.3	09/97→ Teves			97033800		
2.0 i 4WD	04/94→08/99	70 / 95			82511300		→08/97			94030600	ø 250 x 68	
			Ate		82029200		09/97→ Teves					
					92104400	ø 284 x 24 x 51.1						
		338100	Ate		2537401	[+] 25374 18.3	Teves			91055900	ø 250 x 57	
2.0 TD 4WD	10/97→08/03	61 / 83	Ate		82029200		Teves			97033800		
					92104400	ø 284 x 24 x 51.1				94030600	ø 250 x 68	
		338200	San		2189202	[+] 21892 18.4				91055900	ø 250 x 57	
2.2 D 4WD	08/94→04/99	52 / 71			82511300					97033800		
					92104400	ø 284 x 24 x 51.1				94030600	ø 250 x 68	
SPORTAGE (SL) 07/10→												
		338300			2520501	[+] 25205 17.5		Man		2529201	[+] 25292 15.9	
1.6 GDI	02/11→	99 / 135			82510900			Luc		82074100		
1.7 CRDi	12/10→	85 / 116			92166500	ø 300 x 28 x 47.2				92161700	ø 262 x 10 x 61.1	
2.0 CRDi	07/10→	100 / 136										
2.0 CRDi	08/10→	135 / 184										
2.0 CRDi	08/12→	130 / 177										
2.0 CVVT	07/10→	120 / 163										
2.0 CVVT	07/10→	122 / 166										
2.0 CVVT Flex	01/12→	131 / 178										

		kW / hp									
SPORTAGE (SL) 07/10→											
		338300									
1.6 GDI	02/11→	99 / 135		TPM0008				PRO	92161703	ø 262 x 10 x 61.1	
1.7 CRDi	12/10→	85 / 116							TPM0008		
2.0 CRDi	07/10→	100 / 136							91078300	ø 190 x 40	
2.0 CRDi	08/10→	135 / 184									
2.0 CRDi	08/12→	130 / 177									
2.0 CVVT	07/10→	120 / 163									
2.0 CVVT	07/10→	122 / 166									
2.0 CVVT Flex	01/12→	131 / 178									
		338400		2520501	[+] 25205 17.5	→2013-11		Man	2529201	[+] 25292 15.9	→2013-11
2.0	09/10→	191 / 260		82510900		→2013-11		Luc	82074100		→2013-11
				92166500	ø 300 x 28 x 47.2	→2013-11			92161700	ø 262 x 10 x 61.1	→2013-11
				TPM0008		→2013-11		PRO	92161703	ø 262 x 10 x 61.1	→2013-11
									TPM0008		→2013-11
		338500		2520501	[+] 25205 17.5	→2013-11		Man	2529201	[+] 25292 15.9	→2013-11
2.0 AWD	09/10→	191 / 260		82510900		→2013-11		Luc	82074100		→2013-11
				92166500	ø 300 x 28 x 47.2	→2013-11			92134000	ø 284 x 10.1 x 61.1	→2013-11
				TPM0008		→2013-11			TPM0008		→2013-11
		338600		2520501	[+] 25205 17.5			Man	2529201	[+] 25292 15.9	
2.0 CRDi AWD	07/10→	100 / 136		82510900				Luc	82074100		
2.0 CRDi AWD	08/10→	135 / 184									
2.0 CRDi AWD	08/12→	130 / 177									
2.0 CVVT AWD	07/10→	120 / 163		92166500	ø 300 x 28 x 47.2				92134000	ø 284 x 10.1 x 61.1	
2.0 CVVT Flex AWD	01/12→	131 / 178									
2.4 i AWD	08/10→	130 / 177		TPM0008					TPM0008		
		338700		2520501	[+] 25205 17.5	→2011-07		Man	2529201	[+] 25292 15.9	
2.0 CVVT AWD	07/10→	122 / 166		82510900				Luc	82074100		
				92166500	ø 300 x 28 x 47.2	→2011-06			92134000	ø 284 x 10.1 x 61.1	→2011-08
				TPM0008					TPM0008		
									91078300	ø 190 x 40	
VENGA (YN) 02/10→											
		338800	Man	2389101	[+] 23891 16.9	Mando		Luc	2341703	[+] 23417 15.2	
1.4 CRDi 75	02/10→	55 / 75									
1.4 CRDi 75	02/10→	57 / 78		2518401	[+] 25184 19.4	TRW		Luc	82060100		
1.4 CRDi 90	02/10→	66 / 90									
1.4 CVVT	02/10→	66 / 90									
1.6 CRDi 115	02/10→	85 / 116	Luc	82054100				PRO	92226103	ø 258 x 10 x 40.5	
1.6 CRDi 128	02/10→	94 / 128									
1.6 CVVT	02/10→	92 / 125		PRO 92133903	ø 280 x 26 x 47.4						

		kW / hp									
110 01/95→											
		338900	Luc	2117002	[–] 21170 17	→05/95			91037201	ø 200 x 41	
1.5	01/95→	54 / 73									
1.5	01/95→	57 / 78	Luc	2367101	[+] 23671 17	06/95→			83037200	bore ø 20.6 ø 200 x 41	
			Luc	82062800							
				92109200	ø 239 x 19.5 x 41.8	⊕ rim size 13"					
				92112100	ø 260 x 20 x 42.5	⊕ rim size 14"					
		339000	Luc	2367101	[+] 23671 17				91037201	ø 200 x 41	
1.5	10/00→	56 / 76	Luc	82062800					83037200	bore ø 20.6 ø 200 x 41	
				92109200	ø 239 x 19.5 x 41.8	⊕ rim size 13"					
				92112100	ø 260 x 20 x 42.5	⊕ rim size 14"					
		339100	Luc	2117002	[–] 21170 17	→05/95			91037201	ø 200 x 41	
1.5 16V	01/95→	70 / 95									

		kW / hp									
110 01/95→											
		339100	Luc		**2367101**	[+] 23671 17	06/95→		**83037200**	bore ø 20.6 ø 200 x 41	
1.5 16V	01/95→	70 / 95	Luc		**82062800**		→05/95				
					92109200	ø 239 x 19.5 x 41.8	⊕ rim size 13"				
					92112100	ø 260 x 20 x 42.5	⊕ rim size 14"				
		339200	Luc		**2367101**	[+] 23671 17			**91037201**	ø 200 x 41	
1.5 16V	10/00→	67 / 91									
1.6	01/00→	60 / 82	Luc		**82062800**						
1.6	01/00→	66 / 90									
2.0 i	08/96→	110 / 150			**92109200**	ø 239 x 19.5 x 41.8	⊕ rim size 13"				
Wankel	06/97→	88 / 120			**92112100**	ø 260 x 20 x 42.5	⊕ rim size 14"				
111 01/95→											
		339300	Luc		**2367101**	[+] 23671 17			**91037201**	ø 200 x 41	
1.5	01/96→	57 / 78									
1.5	10/00→	56 / 76	Luc		**82062800**				**83037200**	bore ø 20.6 ø 200 x 41	
1.5 16V	10/00→	67 / 91									
					92109200	ø 239 x 19.5 x 41.8	⊕ rim size 13"				
					92112100	ø 260 x 20 x 42.5	⊕ rim size 14"				
		339400	Luc		**2117002**	[–] 21170 17	→05/95		**91037201**	ø 200 x 41	
1.5 16V	01/95→	70 / 95	Luc		**2367101**	[+] 23671 17	06/95→				
			Luc		**82062800**						
					92109200	ø 239 x 19.5 x 41.8	⊕ rim size 13"				
					92112100	ø 260 x 20 x 42.5	⊕ rim size 14"				
112 01/95→											
		339500	Luc		**2117002**	[–] 21170 17	→05/95		**91037201**	ø 200 x 41	
1.5	01/95→	54 / 73	Luc		**2367101**	[+] 23671 17	06/95→				
1.5	01/95→	57 / 78									
1.5 16V	01/95→	70 / 95	Luc		**82062800**						
					92109200	ø 239 x 19.5 x 41.8	⊕ rim size 13"				
					92112100	ø 260 x 20 x 42.5	⊕ rim size 14"				
		339600	Luc		**2367101**	[+] 23671 17			**91037201**	ø 200 x 41	
1.5	10/00→	56 / 76									
1.5 16V	10/00→	67 / 91	Luc		**82062800**				**83037200**	bore ø 20.6 ø 200 x 41	
					92109200	ø 239 x 19.5 x 41.8	⊕ rim size 13"				
					92112100	ø 260 x 20 x 42.5	⊕ rim size 14"				
CEVARO (2108, 2109) 01/88→ → SAMARA (2108, 2109), Page 529											
DIVA (21099) 05/90→ → SAMARA FORMA (21099), Page 529											
KALINA Estate (1117) 10/04→											
		339700	Luc		**2117002**	[–] 21170 17					
1.4 16V	11/08→	66 / 90									
1.4 16V LPG	11/08→	65 / 88			**92112100**	ø 260 x 20 x 42.5					
1.6	10/04→	60 / 82									
1.6	01/10→	62 / 84									
KALINA Hatchback (1119) 10/04→											
		339800	Luc		**2117002**	[–] 21170 17					
1.4 16V	11/08→	66 / 90									
1.4 16V LPG	11/08→	65 / 88			**92112100**	ø 260 x 20 x 42.5					
1.6	10/04→	60 / 82									
1.6	01/10→	62 / 84									
1.6 16V	10/04→	66 / 90									
KALINA Kombi (1117) 10/04→ → KALINA Estate (1117), Page 527											
KALINA Saloon (1118) 10/04→											
		339900	Luc		**2117002**	[–] 21170 17					
1.4 16V	11/08→	66 / 90									
1.4 16V LPG	11/08→	65 / 88			**92112100**	ø 260 x 20 x 42.5					
1.6	10/04→	60 / 82									
1.6	01/10→	62 / 84									
1.6 16V	10/04→	66 / 90									
KALINA Schrägheck (1119) 10/04→ → KALINA Hatchback (1119), Page 527											
KALINA Stufenheck (1118) 10/04→ → KALINA Saloon (1118), Page 527											

		kW / hp										
KALINKA (2105) 05/81→ → NOVA (2105), Page 528												
KALINKA Break (2104) 08/94→ → NOVA Estate (2104), Page 528												
KALINKA Kombi (2104) 08/94→ → NOVA Estate (2104), Page 528												
LAIKA (2105) 05/81→ → NOVA (2105), Page 528												
LARGUS Estate 03/12→												
		340000	Ate		**2467301**	[–] 24673 18	⊕ ABS	Luc		**91048000**	ø 203.2 x 38	Lucas
1.6	03/12→	62 / 84										
1.6	03/12→	77 / 105	Luc		**2146304**	[+] 21463 18.2	⊖ ABS	Bos		**91060200**	ø 203.2 x 38	Bosch
			Luc		**82508200**		⊖ ABS			**91069300**	ø 228.6 x 42	
			Luc		**82062800**		⊕ ABS	Ben		**97010400**		Lucas
				PRO	**92036103**	ø 238 x 12 x 41	⊖ ABS			**97031000**		Bosch
				PRO	**92175103**	ø 259 x 12 x 41.4	⊕ ABS			**94023600**	ø 180,2 x 53.5	
				PRO	**92119203**	ø 260 x 22 x 44						
					TPM0004							
LARGUS Kombi 03/12→ → LARGUS Estate, Page 528												
NADESCHDA (2120) 12/97→												
		340100	Ben		**2066001**	[–] 20660 15.6				**91029100**	ø 250 x 51	
1.7	12/97→	60 / 82										
1.7 i	12/97→	59 / 80										
1.8	12/97→	60 / 82			**92019900**	ø 272 x 11 x 50.5				**94015700**	ø 250,0 x 57.5	
1.8 i	12/97→	67 / 91										
NIVA (2121) 01/93→												
		340200	Ben		**2066001**	[–] 20660 15.6				**91029100**	ø 250 x 51	
1700 i	06/96→	59 / 80										
1700 i 4x4	10/00→	60 / 82										
1700 i 4x4	09/10→	61 / 83			**92019900**	ø 272 x 11 x 50.5				**83029100**	bore ø 20.6 ø 250 x 51	
1900 Diesel	01/93→	47 / 64										
1900 Diesel	01/99→	55 / 75								**94015700**	ø 250,0 x 57.5	
NIVA II (2123) 09/02→												
		340300	GM		**2397601**	[–] 23976 16				**91029100**	ø 250 x 51	
1.7	09/02→	59 / 80										
1.7	08/04→	61 / 83										
1.7 LPG	09/02→	57 / 78			**92019900**	ø 272 x 11 x 50.5				**83029100**	bore ø 20.6 ø 250 x 51	
										94015700	ø 250,0 x 57.5	
NOVA (2105) 05/81→												
		340400	Ben		**2016603**	[–] 20166 16				**91029100**	ø 250 x 51	
1200 Junior/L (VAZ, WAS2105)	09/81→	44 / 60										
1300 Spezial/L (VAZ, WAS2105)	05/81→	48 / 65								**94021900**	ø 250,0 x 54	
1500	05/93→04/04	49 / 67										
1500 S (WAS21093)	06/89→	52 / 71										
1500 Special (VAZ2105, WAS21053)	03/85→	55 / 75										
1600 (WAS21074)	01/88→10/01	56 / 76										
1700 i Classic (VAZ2107)	06/96→	62 / 84										
NOVA Estate (2104) 08/94→												
		340500	Ben		**2016603**	[–] 20166 16				**91029100**	ø 250 x 51	
1500	08/94→	49 / 67										
1700	08/94→	62 / 84								**94021900**	ø 250,0 x 54	
NOVA Kombi (2104) 08/94→ → NOVA Estate (2104), Page 528												
PRIORA Estate (2171) 10/09→												
		340600	Luc		**2117002**	[–] 21170 17						
1.6	10/09→	60 / 82										
1.6	10/09→	72 / 98			**92112100**	ø 260 x 20 x 42.5						
PRIORA Hatchback (2172) 12/08→												
		340700	Luc		**2117002**	[–] 21170 17						
1.6	12/08→	60 / 82										
1.6	12/08→	72 / 98										
1.6 LPG	12/08→	71 / 96			**92112100**	ø 260 x 20 x 42.5						
PRIORA Kombi (2171) 10/09→ → PRIORA Estate (2171), Page 528												
PRIORA Saloon (2170) 12/08→												
		340800	Luc		**2117002**	[–] 21170 17						
1.6	12/08→	60 / 82										
1.6	12/08→	72 / 98										
1.6 LPG	03/09→	71 / 96			**92112100**	ø 260 x 20 x 42.5						
PRIORA Schrägheck (2172) 12/08→ → PRIORA Hatchback (2172), Page 528												

		kW / hp										
PRIORA Stufenheck (2170) 12/08→ → PRIORA Saloon (2170), Page 528												
RIVA (2105) 05/81→ → NOVA (2105), Page 528												
RIVA Estate (2104) 08/94→ → NOVA Estate (2104), Page 528												
RIVA Kombi (2104) 08/94→ → NOVA Estate (2104), Page 528												
SABLE (21099) 05/90→ → SAMARA FORMA (21099), Page 529												
SABLE Saloon (21099) 05/90→ → SAMARA FORMA (21099), Page 529												
SABLE Stufenheck (21099) 05/90→ → SAMARA FORMA (21099), Page 529												
SAGONA (21099) 05/90→ → SAMARA FORMA (21099), Page 529												
SAMARA (2108, 2109) 01/88→												
		340900	Luc		**2367101**	[+] 23671 17				**91037201**	ø 200 x 41	
1.5	04/96→	57 / 78										
1100	02/96→	43 / 58	Luc		**82062800**					**97005200**		
1300	02/96→	50 / 68			**92039100**	ø 239 x 12 x 42.6				**83037200**	bore ø 20.6 ø 200 x 41	
		341000	Luc		**2117002**	[–] 21170 17	→05/95			**91037201**	ø 200 x 41	
1300	01/88→	46 / 63										
1300	09/91→	45 / 61										
1500	01/88→	53 / 72	Luc		**2367101**	[+] 23671 17	06/95→			**97005200**		
1500	09/91→	50 / 68										
1500	02/95→	52 / 71	Luc		**82062800**					**83037200**	bore ø 20.6 ø 200 x 41	
					92039100	ø 239 x 12 x 42.6						
SAMARA FORMA (21099) 05/90→												
		341100	Luc		**2367101**	[+] 23671 17				**91037201**	ø 200 x 41	
1.5	01/00→	57 / 78										
1.5	08/03→	59 / 80	Luc		**82062800**					**97005200**		
1300	02/96→	50 / 68										
					92039100	ø 239 x 12 x 42.6				**83037200**	bore ø 20.6 ø 200 x 41	
		341200	Luc		**2117002**	[–] 21170 17	→05/95			**91037201**	ø 200 x 41	
1100	07/91→	39 / 53										
1300	05/90→	46 / 63										
1300	07/91→	45 / 61	Luc		**2367101**	[+] 23671 17	06/95→			**97005200**		
1500	07/91→	50 / 68										
1500	09/91→	53 / 72	Luc		**82062800**					**83037200**	bore ø 20.6 ø 200 x 41	
1500	11/94→	52 / 71										
					92039100	ø 239 x 12 x 42.6						
SIGNET (2105) 05/81→ → NOVA (2105), Page 528												
TOSCANA (2107) 12/85→05/12												
		341300	Ben		**2016603**	[–] 20166 16				**94021900**	ø 250,0 x 54	
1300 (VAZ2107)	12/85→05/12	48 / 65										
TOSCANA Saloon (2107) 12/85→05/12 → TOSCANA (2107), Page 529												
TOSCANA Stufenheck (2107) 12/85→05/12 → TOSCANA (2107), Page 529												

		kW / hp										
DEDRA (835) 04/89→07/99												
		341400	Luc		**2083302**	[+] 20833 17.1			Luc	**2317703**	[–] 23177 14.4	Lucas
1.6 16V (835EI)	01/96→07/99	76 / 103										
			Luc		**82062800**				Ben	**2110701**	[o] 21107 12	Bendix
				PRO	**92068503**	ø 257 x 20 x 40.5			Luc	**82037300**		
									Luc	**82062800**		
										PRO **92061103**	ø 240 x 11 x 40	
		341500	Luc		**2083302**	[+] 20833 17.1	⊕ ABS →4014223 4014224→		Luc	**2317703**	[–] 23177 14.4	⊕ ABS
1.6 i.e. (835AN)	04/93→07/99	55 / 75										
			Luc		**2110005**	[+] 21100 17	→4014223		Luc	**82037300**		⊕ ABS
			Luc		**82062800**		4014224→ →4014223 ⊕ ABS		Luc	**82062800**		⊕ ABS
				PRO	**92041503**	ø 257 x 12 x 40.5	⊕ ABS →4014223 4014224→		Ben	**91049100**	ø 180 x 32	
				PRO	**92061103**	ø 240 x 11 x 40	→4014223		Ben	**97005800**		
									Ben	**84049100**	bore ø 19 ø 180 x 32	
										PRO **92061103**	ø 240 x 11 x 40	⊕ ABS

DEDRA (835) 04/89→07/99

		kW / hp											
1.6 i.e. (835AN)	04/93→07/99	341500 55 / 75			2083302	[+] 20833 17.1	⊕ ABS →4014223 4014224→			94014800	ø 180,0 x 40.1	
1.6 LE (835EB) CAT	07/94→07/99	341600 66 / 90	Luc		2083302	[+] 20833 17.1	⊕ ABS →4014223 4014224→	Luc		2317703	[–] 23177 14.4	⊕ ABS
			Luc		2110005	[+] 21100 17	→4014223	Luc		82037300		⊕ ABS
			Luc		82062800		4014224→ →4014223 ⊕ ABS	Luc		82062800		⊕ ABS
				PRO	92041503	ø 257 x 12 x 40.5	⊕ ABS →4014223 4014224→	Ben		91049100	ø 180 x 32	
				PRO	92061103	ø 240 x 11 x 40	→4014223	Ben		97005800		
								Ben		84049102	bore ø 22.2 ø 180 x 32	
									PRO	92061103	ø 240 x 11 x 40	⊕ ABS
										94014800	ø 180,0 x 40.1	
1.8 16V LE (835FG)	03/96→07/99	341700 83 / 113	Luc		2083302	[+] 20833 17.1	Lucas	Luc		2317703	[–] 23177 14.4	Lucas
2.0 i.e. (835AL)	09/89→07/99	83 / 113	Ate		2192701	[+] 21927 17.9	Teves	Ben		2110701	[o] 21107 12	Bendix
			Ate		82032000			Luc		82037300		
			Luc		82062800			Luc		82062800		
			Ate		82062900				PRO	92061103	ø 240 x 11 x 40	
				PRO	92068503	ø 257 x 20 x 40.5	Lucas					
				PRO	92069603	ø 257 x 22 x 40.5	Teves					
1.8 GT 16V (835EH)	03/96→07/99	341800 96 / 131	Luc		2083302	[+] 20833 17.1	Lucas	Luc		2317703	[–] 23177 14.4	
2.0 16V (835ED)	07/94→07/99	102 / 139	Ate		2322901	[+] 23229 18	Teves	Luc		82037300		
			Ate		82030900		⊖ ABS	Luc		82062800		
			Luc		82062800				PRO	92061103	ø 240 x 11 x 40	
			Ate		82062900		⊖ ABS					
				PRO	92069603	ø 257 x 22 x 40.5						
1.8 i.e. (835AT)	08/93→07/99	341900 66 / 90	Luc		2083302	[+] 20833 17.1		Luc		2317703	[–] 23177 14.4	Lucas
1.8 i.e. (835BD, 835AD)	09/89→07/99	77 / 105										
1.8 i.e. (835FA)	07/94→07/99	74 / 101	Luc		82062800			Ben		2110701	[o] 21107 12	Bendix
1.9 TDS (835EE, 835EF)	04/89→07/99	66 / 90		PRO	92041503	ø 257 x 12 x 40.5	→09/94	Luc		82037300		
				PRO	92068503	ø 257 x 20 x 40.5	10/94→	Luc		82062800		
									PRO	92061103	ø 240 x 11 x 40	
2.0 i.e. Turbo (835AR)	04/91→07/99	342000 119 / 162	Luc		2316803	[+] 23168 19.3	Lucas	Luc		2317703	[–] 23177 14.4	
			Ate		2328902	[+] 23289 19	Teves	Luc		82037300		
			Ate		82032000			Luc		82062800		
			Luc		82062800				PRO	92061103	ø 240 x 11 x 40	
			Ate		82062900							
				PRO	92055203	ø 284 x 22 x 39.4						

DEDRA SW (835) 07/94→07/99

1.6 (835EB)	10/94→07/99	342100 66 / 90	Luc		2083302	[+] 20833 17.1		Luc		2317703	[–] 23177 14.4	⊕ ABS
			Luc		82062800			Luc		82037300		⊕ ABS
				PRO	92041503	ø 257 x 12 x 40.5		Luc		82062800		⊕ ABS
								Ben		91049100	ø 180 x 32	
								Ben		97005800		
									PRO	92061103	ø 240 x 11 x 40	⊕ ABS

		kW / hp											
DEDRA SW (835) 07/94→07/99													
1.6 (835EB)	10/94→07/99	342100 66 / 90			82083302	[+] 20833 17.1				94014800	ø 180,0 x 40.1	
1.6 16V (835EI)	01/96→07/99	342200 76 / 103	Luc		82083302	[+] 20833 17.1		Luc		82317703	[–] 23177 14.4	
1.8 i.e. (835FA)	07/94→07/99	74 / 101	Luc		82062800			Luc		82037300		
1.9 TDS (835EE, 835EF)	07/94→07/99	66 / 90		PRO	92068503	ø 257 x 20 x 40.5		Luc		82062800		
									PRO	92061103	ø 240 x 11 x 40	
1.8 16V LE (835FG)	03/96→07/99	342300 83 / 113	Luc		82083302	[+] 20833 17.1	Lucas	Luc		82317703	[–] 23177 14.4	
			Ate		82192701	[+] 21927 17.9	Teves	Luc		82037300		
			Ate		82032000			Luc		82062800		
			Luc		82062800				PRO	92061103	ø 240 x 11 x 40	
			Ate		82062900							
				PRO	92068503	ø 257 x 20 x 40.5	Lucas					
				PRO	92069603	ø 257 x 22 x 40.5	Teves					
1.8 GT 16V (835EH)	03/96→07/99	342400 96 / 131	Luc		82083302	[+] 20833 17.1	Lucas	Luc		82317703	[–] 23177 14.4	
2.0 16V (835ED)	07/94→07/99	102 / 139	Ate		82322901	[+] 23229 18	Teves	Luc		82037300		
			Ate		82030900		⊖ ABS	Luc		82062800		
			Luc		82062800				PRO	92061103	ø 240 x 11 x 40	
			Ate		82062900		⊖ ABS					
				PRO	92069603	ø 257 x 22 x 40.5						
2.0 Integrale (835ED)	07/94→07/99	342500 102 / 139	Luc		82316803	[+] 23168 19.3	Lucas	Luc		82317703	[–] 23177 14.4	
			Ate		82328902	[+] 23289 19	Teves	Luc		82037300		
			Ate		82032000			Luc		82062800		
			Luc		82062800				PRO	92061103	ø 240 x 11 x 40	
			Ate		82062900							
				PRO	92055203	ø 284 x 22 x 39.4						
DELTA II (836) 06/93→09/99													
1.4 i.e. (836AF, 836AH)	10/94→08/99	342600 51 / 69	Luc		82083302	[+] 20833 17.1		Ben		91049100	ø 180 x 32	
			Luc		82062800			Ben		97005800		
				PRO	92061103	ø 240 x 11 x 40				94014800	ø 180,0 x 40.1	
1.6 i.e. (836AD)	06/93→08/99	342700 55 / 75	Luc		82083302	[+] 20833 17.1	Lucas	Luc		82317703	[–] 23177 14.4	⊕ rear disc brake
1.6 i.e. (836AP)	03/96→08/99	66 / 90	Ate		82193002	[+] 21930 17.9	Teves	Luc		82037300		
1.6 i.e. 16V (836AO)	01/96→08/99	76 / 103	Ate		82030900			Luc		82062800		
			Luc		82062800			Ben		91049100	ø 180 x 32	⊕ rear drum brake
			Ate		82062900			Ben		97005800		⊕ rear drum brake
				PRO	92041503	ø 257 x 12 x 40.5			PRO	92061103	ø 240 x 11 x 40	⊕ rear disc brake
										94014800	ø 180,0 x 40.1	⊕ rear drum brake
1.8	02/96→09/99	342800 66 / 90	Luc		82083302	[+] 20833 17.1	Lucas	Luc		82317703	[–] 23177 14.4	
1.8 i.e. (836AE)	06/93→08/99	76 / 103	Ate		82192701	[+] 21927 17.9	Teves	Luc		82037300		
1.8 i.e. (836AG, 836AL)	07/94→08/99	66 / 90	Ate		82030900			Luc		82062800		
1.8 i.e. 16V (836AQ)	03/96→08/99	83 / 113	Luc		82062800				PRO	92061103	ø 240 x 11 x 40	
			Ate		82062900							

		kW / hp												
DELTA II (836) 06/93→09/99														
		342800		PRO	92041503	ø 257 x 12 x 40.5								
1.8	02/96→09/99	66 / 90												
1.8 i.e. (836AE)	06/93→08/99	76 / 103		PRO	92068503	ø 257 x 20 x 40.5								
1.8 i.e. (836AG, 836AL)	07/94→08/99	66 / 90												
1.8 i.e. 16V (836AQ)	03/96→08/99	83 / 113												
		342900	Luc		2316803	[+] 23168 19.3	Lucas		Luc		2317703	[–] 23177 14.4	
1.8 i.e. 16V GT (836AR)	03/96→08/99	96 / 131												
2.0 16V (836AA, 836CA)	06/93→08/99	102 / 139	Ate		2328902	[+] 23289 19	Teves		Luc		82037300		
			Ate		82032000				Luc		82062800		
			Luc		82062800					PRO	92061103	ø 240 x 11 x 40	
			Ate		82062900								
				PRO	92055203	ø 284 x 22 x 39.4								
		343000	Luc		2083302	[+] 20833 17.1	Lucas		Luc		2317703	[–] 23177 14.4	⊕ rear disc brake
1.9 TD (836AM, 836AN)	10/94→08/99	66 / 90	Ate		2192701	[+] 21927 17.9	Teves 11/96→		Luc		82037300		⊕ rear disc brake
			Ate		2193002	[+] 21930 17.9	Teves 10/95→ →10/96		Luc		82062800		⊕ rear disc brake
			Ate		82030900		10/95→		Ben		91046500	ø 203.2 x 39	⊕ rear drum brake
			Luc		82062800					PRO	92061103	ø 240 x 11 x 40	⊕ rear disc brake
			Ate		82062900		10/95→				94019900	ø 203,2 x 48.5	⊕ rear drum brake
				PRO	92041503	ø 257 x 12 x 40.5							
				PRO	92068503	ø 257 x 20 x 40.5							
		343100	Luc		2316803	[+] 23168 19.3	Lucas		Luc		2317703	[–] 23177 14.4	
2.0 16V Turbo (836AB)	06/93→08/99	137 / 186											
2.0 16V Turbo (836AS)	07/96→08/99	142 / 193	Ate		2328902	[+] 23289 19	Teves		Luc		82037300		
			Ate		82032000				Luc		82062800		
			Luc		82062800					PRO	92061103	ø 240 x 11 x 40	
			Ate		82062900								
				PRO	92053503	ø 284 x 22 x 43.5							
DELTA III (844) 08/08→														
		343200	Bos		2370802	[+] 23708 19			Bos		2371401	[–] 23714 15.5	→12/09
1.4	09/08→	88 / 120												
1.6 D Multijet	08/08→	85 / 116	Bos	epad	2370881	[+] 23708 19			Bos	epad	2371481	[–] 23714 15.5	→12/09
1.6 D Multijet	09/08→	88 / 120	Bos		82054200				Bos		2371403	[+] 23714 17.2	01/10→
				PRO	92053503	ø 284 x 22 x 43.5			Bos		82054300		
										PRO	92034203	ø 251 x 10 x 50.5	
		343300	Bos		2371102	[+] 23711 18.2	→07/10		Bos		2371401	[–] 23714 15.5	→12/09
1.4	09/08→	110 / 150	Bos		2371104	[+] 23711 19.4	07/10→		Bos	epad	2371481	[–] 23714 15.5	→12/09
			Bos		82054200				Bos		2371403	[+] 23714 17.2	01/10→
				PRO	92107703	ø 281 x 26 x 43.5			Bos		82054300		
										PRO	92034203	ø 251 x 10 x 50.5	
		343400	Bos		2371104	[+] 23711 19.4			Bos		2371403	[+] 23714 17.2	
1.4 16V	07/10→	103 / 140											
1.4 Bifuel	07/11→	88 / 120	Bos		82054200				Bos		82054300		
				PRO	92107703	ø 281 x 26 x 43.5				PRO	92034203	ø 251 x 10 x 50.5	
		343500	Bos		2370802	[+] 23708 19			Bos		2371403	[+] 23714 17.2	
1.6 D Multijet	04/11→	77 / 105	Bos	epad	2370881	[+] 23708 19			Bos		82054300		
			Bos		82054200					PRO	92034203	ø 251 x 10 x 50.5	
				PRO	92053503	ø 284 x 22 x 43.5							

→

		kW / hp												
DELTA III (844) 08/08→														
		343600	Bre		2375701	[+] 23757 16		Luc		2376002	[–] 23760 17.8	→10/09		
1.8	01/09→	147 / 200						Luc		82509000		→10/09		
									PRO	92046903	ø 251 x 10 x 50.5			
		343700	Ate		2472701	[+] 24727 20		Bos		2371401	[–] 23714 15.5	→12/09		
1.9 D Multijet	01/09→	140 / 190												
2.0 D Multijet	09/08→	120 / 163	Ate		82076900			Bos	epad	2371481	[–] 23714 15.5	→12/09		
2.0 D Multijet	09/08→	121 / 165						Bos		2371403	[+] 23714 17.2	01/10→		
								Bos		82054300				
									PRO	92034203	ø 251 x 10 x 50.5			
DELTA Mk II (836) 06/93→09/99 → DELTA II (836), Page 531														
FLAVIA Cabriolet (JS) 03/12→ → FLAVIA Convertible (JS), Page 533														
FLAVIA Convertible (JS) 03/12→														
		343800	Ake		2358403	[+] 23584 16		Ake		2358202	[+] 23582 15.5			
2.4	03/12→	125 / 170												
2.4	03/12→	129 / 175												
KAPPA (838A) 08/94→10/01														
		343900	Luc		2316803	[+] 23168 19.3	Lucas	Luc		2160601	[–] 21606 16.6			
2.0 16V Turbo (838AB1AA)	02/95→10/01	151 / 205												
2.0 20V (838AG1AA, 838AG11A)	07/96→10/01	114 / 155	Ate		2328902	[+] 23289 19	Teves	Luc		82060100				
2.4 20V (838AC1AA, 838AC11A)	08/94→10/01	129 / 175	Ate		82032000					92095300	ø 276 x 10 x 51.7			
2.4 JTD (838AL1AA)	06/98→10/01	100 / 136												
2.4 T.DS (838AE1AA, 838AH1AA)	08/94→10/01	91 / 124	Ate		82062900									
					92093900	ø 281 x 26 x 47.5								
		344000	Luc		2316803	[+] 23168 19.3	Lucas	Luc		2160601	[–] 21606 16.6			
2.0 20V (838AA1AA)	10/94→10/01	107 / 146												
			Ate		2328902	[+] 23289 19	Teves	Luc		82060100				
			Ate		82032000					92095300	ø 276 x 10 x 51.7			
			Ate		82062900									
					92093800	ø 281 x 22 x 47.5	→04/98							
					92093900	ø 281 x 26 x 47.5	05/98→							
		344100	Bre		2309201	[+] 23092 16	Brembo	Luc		2160601	[–] 21606 16.6			
2.0 20V Turbo (838AM1AA)	06/98→10/01	162 / 220												
3.0 24V (838AD1AA, 838AD11A, 838XD1AA, 838ZD1AA)	08/94→10/01	150 / 204	Luc		2316803	[+] 23168 19.3	Lucas	Luc		82060100				
			Bre		82505800		Brembo			92095300	ø 276 x 10 x 51.7			
					92097500	ø 310 x 28 x 47.3								
KAPPA Coupe (838) 07/96→03/01														
		344200	Luc		2316803	[+] 23168 19.3	Lucas	Luc		2160601	[–] 21606 16.6			
2.0 16V Turbo (838CB)	11/96→03/01	151 / 205												
2.0 20V	07/96→03/01	114 / 155	Ate		2328902	[+] 23289 19	Teves	Luc		82060100				
2.4 20V (838CC)	11/96→03/01	129 / 175	Ate		82032000					92095300	ø 276 x 10 x 51.7			
			Ate		82062900									
					92093900	ø 281 x 26 x 47.5								
		344300	Bre		2309201	[+] 23092 16	Brembo	Luc		2160601	[–] 21606 16.6			
2.0 20V Turbo (838CM)	06/98→03/01	162 / 220												
3.0 24V (838CD, 838CD11A)	11/96→03/01	150 / 204	Luc		2316803	[+] 23168 19.3	Lucas	Luc		82060100				
			Bre		82505800		Brembo			92095300	ø 276 x 10 x 51.7			
					92097500	ø 310 x 28 x 47.3								
KAPPA SW (838B) 07/96→10/01														
		344400	Luc		2316803	[+] 23168 19.3	Lucas	Luc		2160601	[–] 21606 16.6			
2.0 16V Turbo (838BB1AA)	07/96→10/01	151 / 205												
2.0 20V (838BG1AA)	07/96→10/01	114 / 155	Ate		2328902	[+] 23289 19	Teves	Luc		82060100				
2.4 20V (838BC1AA, 838BC11A)	07/96→10/01	129 / 175												
2.4 JTD (838BL1AA)	06/98→10/01	100 / 136												

		kW / hp										
KAPPA SW (838B) 07/96→10/01												
2.4 T.DS (838BH1AA)	07/96→10/01	91 / 124	Ate	82032000					92095300	ø 276 x 10 x 51.7	
			Ate	82062900							
				92093900	ø 281 x 26 x 47.5						
		344500	Bre	2309201	[+] 23092 16	Brembo	Luc		2160601	[–] 21606 16.6	
2.0 20V Turbo (838BM1AA)	06/98→10/01	162 / 220									
3.0 24V (838BD11A)	07/96→10/01	150 / 204	Luc	2316803	[+] 23168 19.3	Lucas	Luc		82060100		
			Bre	82505800		Brembo			92095300	ø 276 x 10 x 51.7	
				92097500	ø 310 x 28 x 47.3						
LYBRA (839AX) 07/99→10/05												
		344600	Ate	2314101	[+] 23141 19.3		Luc		2351703	[–] 23517 16.5	
1.6	10/00→10/05	76 / 103	Ate	82032000			Luc		82060100		
			Ate	82062900			Luc		82063300		
				92097400	ø 281 x 15 x 44.7			PRO	92034203	ø 251 x 10 x 50.5	
		344700	Ate	2314002	[+] 23140 19.3	→02/00	Luc		2351703	[–] 23517 16.5	
1.6 16V (839AXA1A)	07/99→10/05	76 / 103	Ate	2314101	[+] 23141 19.3	03/00→	Luc		82060100		
			Ate	82032000			Luc		82063300		
			Ate	82062900				PRO	92034203	ø 251 x 10 x 50.5	
				92097400	ø 281 x 15 x 44.7						
		344800	Ate	2328902	[+] 23289 19		Luc		2351703	[–] 23517 16.5	
1.8 16V (839AXB1A, 839AXG1A)	07/99→10/05	96 / 131									
1.9 JTD	05/01→10/05	85 / 116	Ate	82032000			Luc		82060100		
1.9 JTD (839AXD1A)	07/99→09/00	77 / 105									
1.9 JTD (839AXI1A)	09/00→05/01	81 / 110	Ate	82062900			Luc		82063300		
2.0 20V (839AXC11, 839AXC1A)	07/99→09/00	113 / 154									
2.0 20V (839AXH1A)	09/00→10/05	110 / 150		PRO 92053503	ø 284 x 22 x 43.5			PRO	92034203	ø 251 x 10 x 50.5	
2.4 JTD	05/02→10/05	110 / 150									
2.4 JTD (839AXE1A)	07/99→02/01	99 / 135									
2.4 JTD (839AXL1A)	09/00→05/02	103 / 140									
		344900	Bos	2371102	[+] 23711 18.2		Luc		2351703	[–] 23517 16.5	
2.4 20V	10/01→10/05	125 / 170		PRO 92261403	ø 281 x 26 x 44			PRO	92046903	ø 251 x 10 x 50.5	
LYBRA SW (839BX) 07/99→10/05												
		345000	Ate	2314101	[+] 23141 19.3		Luc		2351703	[–] 23517 16.5	
1.6	10/00→10/05	76 / 103	Ate	82032000			Luc		82060100		
			Ate	82062900			Luc		82063300		
				92097400	ø 281 x 15 x 44.7			PRO	92034203	ø 251 x 10 x 50.5	
		345100	Ate	2314002	[+] 23140 19.3	→02/00	Luc		2351703	[–] 23517 16.5	
1.6 16V (839BXA1A)	07/99→10/05	76 / 103	Ate	2314101	[+] 23141 19.3	03/00→	Luc		82060100		
			Ate	82032000			Luc		82063300		
			Ate	82062900				PRO	92034203	ø 251 x 10 x 50.5	
				92097400	ø 281 x 15 x 44.7						
		345200	Ate	2328902	[+] 23289 19		Luc		2351703	[–] 23517 16.5	
1.8 16V (839BXB1A, 839BXG1A)	07/99→10/05	96 / 131									
1.9 JTD	05/01→10/05	85 / 116	Ate	82032000			Luc		82060100		
1.9 JTD (839BXD1A)	07/99→09/00	77 / 105									
1.9 JTD (839BXI1A)	09/00→05/01	81 / 110	Ate	82062900			Luc		82063300		
2.0 20V (839BXC11, 839BXC1A)	07/99→09/00	113 / 154									
2.0 20V (839BXH1A)	09/00→10/05	110 / 150		PRO 92053503	ø 284 x 22 x 43.5			PRO	92034203	ø 251 x 10 x 50.5	
2.4 JTD	05/02→10/05	110 / 150									
2.4 JTD (839BXE1A)	10/99→09/00	99 / 135									
2.4 JTD (839BXL1A)	09/00→10/05	103 / 140									
MUSA (350) 10/04→												
		345300	Bos	2370503	[–] 23705 17.8				91061100	ø 203.2 x 38	→06/05 Lockheed
1.3 D Multijet	10/04→	51 / 70									
1.4	10/04→	70 / 95									

		kW / hp											
MUSA (350) 10/04→													
		345300	Bos		2370502	[+] 23705 17.8				91065300	ø 203.2 x 38	07/05→ Lockheed
1.3 D Multijet	10/04→	51 / 70										
1.4	10/04→	70 / 95	Bos	epad	2370581	[+] 23705 17.8		Lkh		97015200		
			Bos		82054200			Lkh		84061101	bore ø 22.2 ø 203.2 x 38	
				PRO	92069603	ø 257 x 22 x 40.5				94019900	ø 203,2 x 48.5	
		345400	Bos		2370802	[+] 23708 19				91062000	ø 228.6 x 42	
1.3 D Multijet	09/06→	66 / 90	Bos	epad	2370881	[+] 23708 19		Lkh		97030900		
			Bos		82054200					94014000	ø 228,3 x 48	
				PRO	92053503	ø 284 x 22 x 43.5						
		345500	Bos		2370502	[+] 23705 17.8		Luc		2360102	[–] 23601 13.7	⊕ rear disc brake
1.3 D Multijet	03/09→	70 / 95	Bos	epad	2370581	[+] 23705 17.8		Luc		82060100		⊕ rear disc brake
			Bos		82054200					91062000	ø 228.6 x 42	⊕ rear drum brake
				PRO	92069603	ø 257 x 22 x 40.5			PRO	92061103	ø 240 x 11 x 40	⊕ rear disc brake
										94014000	ø 228,3 x 48	⊕ rear drum brake
		345600	Bos		2370503	[–] 23705 17.8				91065300	ø 203.2 x 38	Lockheed
1.4	09/05→	57 / 78										
1.4	10/07→	66 / 90	Bos		2370502	[+] 23705 17.8		Lkh		97015200		
1.4 LPG	11/10→	57 / 78	Bos	epad	2370581	[+] 23705 17.8				94019900	ø 203,2 x 48.5	
			Bos		82054200							
				PRO	92069603	ø 257 x 22 x 40.5						
		345700	Bos		2370802	[+] 23708 19		Luc		2360102	[–] 23601 13.7	
1.6 D Multijet	07/08→	85 / 116										
1.6 D Multijet	07/08→	88 / 120	Bos	epad	2370881	[+] 23708 19		Luc		82060100		
			Bos		82054200				PRO	92061103	ø 240 x 11 x 40	
				PRO	92053503	ø 284 x 22 x 43.5						
		345800	Bos		2370803	[–] 23708 19	→12/05			91062000	ø 228.6 x 42	
1.9 D Multijet	10/04→	74 / 101	Bos		2370802	[+] 23708 19	01/06→	Lkh		97030900		
			Bos	epad	2370881	[+] 23708 19	01/06→			94014000	ø 228,3 x 48	
			Bos		82054200							
				PRO	92053503	ø 284 x 22 x 43.5						
PHEDRA (179) 09/02→11/10												
		345900	Luc		2026101	[+] 20261 19.3		Luc		2096110	[–] 20961 17.4	
2.0 (179AXA11)	09/02→11/10	100 / 136										
2.0 D Multijet	07/06→11/10	100 / 136	Gir		82059500					82062700		
2.0 JTD	07/03→11/10	79 / 107										
2.0 JTD	06/06→11/10	88 / 120	Luc		82063500			Luc		82062800		
2.0 JTD (179AXB1A)	09/02→11/10	80 / 109										
2.2 JTD (179AXC1A)	09/02→11/10	94 / 128			92115000	ø 285 x 28 x 43.5			PRO	92118203	ø 272 x 12 x 28	
		346000	Luc		2483901	[+] 24839 19.4		Luc		2096110	[–] 20961 17.4	
2.2 D Multijet	03/08→11/10	125 / 170										
			Luc		82513300					82062700		
								Luc		82062800		
									PRO	92118203	ø 272 x 12 x 28	
		346100	Luc		2483901	[+] 24839 19.4		Luc		2096110	[–] 20961 17.4	
2.2 JTD	04/06→11/10	120 / 163										
			Luc		82055400		2x			82062700		
			Luc		82513300			Luc		82062800		
									PRO	92118203	ø 272 x 12 x 28	

I - M

		kW / hp										
PHEDRA (179) 09/02→11/10												
346200			Bre		2357501	[+] 23575 16		Luc		2096110	[–] 20961 17.4	
3.0 V6	09/02→11/10	150 / 204	Bre		82072400					82062700		
					92118100	ø 310 x 32 x 43.5		Luc		82062800		
				PRO	92118203	ø 272 x 12 x 28						
THEMA (LX) 09/11→												
346300			Bos		2416401	[+] 24164 17.8	⊖ sports susp.	Bos		2416301	[+] 24163 17.8	
3.0 V6 CRD	09/11→	140 / 190										
3.0 V6 CRD	09/11→	176 / 239	Bos		2560501	[+] 25605 18.1	⊕ sports susp.		PRO	92177203	ø 320 x 22 x 67	⊕ sports susp.
3.6 V6 VVT	09/11→	210 / 286								91057800	ø 183 x 31	⊕ sports susp.
THESIS (841AX) 07/02→07/09												
346400			Luc		2376101	[+] 23761 18.8		Luc		2376001	[–] 23760 17.8	
2.0 Turbo (841AXA1B03)	07/02→07/09	136 / 185										
2.4 (841AXB1B00)	07/02→07/09	125 / 170										
2.4 D Multijet	04/06→07/09	136 / 185	Gir		82059500			Luc		82055400		
2.4 JTD	05/03→07/09	129 / 175										
2.4 JTD (841AXD1B02)	07/02→07/09	110 / 150	Luc		82063500			Luc		82063300		
3.2 V6	05/03→07/09	169 / 230										
					92115800	ø 305 x 28 x 44.7				92116800	ø 281 x 22 x 47.5	
346500			Luc		2376101	[+] 23761 18.8		Luc		2376001	[–] 23760 17.8	
2.4 JTD	09/03→07/09	120 / 163										
					92115800	ø 305 x 28 x 44.7				92116800	ø 281 x 22 x 47.5	
346600			TRW		2427801	[+] 24278 19.2	⊕ arm.veh.	Luc		2376001	[–] 23760 17.8	
3.0 V6 (841AXC1101)	07/02→07/09	158 / 215										
			Luc		2376101	[+] 23761 18.8	⊖ arm.veh.	Luc		82055400		
			Gir		82059500			Luc		82063300		
			Luc		82063500					92116800	ø 281 x 22 x 47.5	⊖ arm.veh.
					92115800	ø 305 x 28 x 44.7	⊖ arm.veh.					
VOYAGER Großraumlimousine (RT) 09/11→ → VOYAGER MPV (RT), Page 536												
VOYAGER MPV (RT) 09/11→												
346700			Ake		2537801	[+] 25378 18.1		TRW		2537601	[+] 25376 17.6	
2.8 CRD	09/11→	120 / 163										
2.8 CRD	07/12→	131 / 178										
2.8 CRD	08/13→	130 / 177										
3.6 V6 VVT	09/11→	208 / 283										
Y (840A) 11/95→09/03												
346800			Ben		2143602	[–] 21436 17		Ben		91049100	ø 180 x 32	Bendix ⊕ ABS
1.1 (840AE)	11/95→09/03	40 / 54										
1.2 (840AA, 840AF1A)	03/96→09/03	44 / 60	Ate		2318101	[–] 23181 17.9	⊕ ABS	Lkh		91049200	ø 180 x 32	Lockheed ⊖ ABS
			Ben		2143603	[+] 21436 17		Ben		97005800		Bendix
			Ben		82033600			Lkh		97009500		Lockheed
			Ate		82032000		⊕ ABS	Ben		84049103	bore ø 20.6 ø 180 x 32	Bendix
			Ate		82062900		⊕ ABS	Lkh		84049200	bore ø 20.6 ø 180 x 32	Lockheed
			Ben		82063600					94014800	ø 180,0 x 40.1	
				PRO	92041503	ø 257 x 12 x 40.5	⊕ ABS					
				PRO	92061103	ø 240 x 11 x 40						
346900			Ate		2318101	[–] 23181 17.9		Ben		91049100	ø 180 x 32	Bendix ⊕ ABS
1.2 16V (840AD)	04/97→09/03	63 / 86										
1.2 16V (840AG1A)	10/00→09/03	59 / 80	Ate		82032000			Lkh		91049200	ø 180 x 32	Lockheed ⊖ ABS
			Ate		82062900			Ben		97005800		Bendix
				PRO	92041503	ø 257 x 12 x 40.5	⊕ ABS	Lkh		97009500		Lockheed
				PRO	92061103	ø 240 x 11 x 40	⊖ ABS	Ben		84049103	bore ø 20.6 ø 180 x 32	Bendix
								Lkh		84049200	bore ø 20.6 ø 180 x 32	Lockheed
										94014800	ø 180,0 x 40.1	

		kW / hp												
Y (840A) 11/95→09/03														
		347000	Ate		2318101	[–] 23181 17.9	Teves	Ben		91049100	ø 180 x 32	Bendix ⊕ ABS
1.4 12V (840AB)	10/96→09/03	59 / 80										
1.4 12V (840AC)	03/96→09/03	55 / 75	Luc		2083302	[+] 20833 17.1	Lucas	Lkh		91049200	ø 180 x 32	Lockheed ⊖ ABS
			Ate		82032000			Ben		97005800		Bendix
			Luc		82062800			Lkh		97009500		Lockheed
			Ate		82062900			Ben		84049103	bore ø 20.6 ø 180 x 32	Bendix
				PRO	92041503	ø 257 x 12 x 40.5		Lkh		84049200	bore ø 20.6 ø 180 x 32	Lockheed
										94014800	ø 180,0 x 40.1	
YPSILON (843) 10/03→12/11												
		347100	Luc		2407301	[–] 24073 16.4		Luc		2360102	[–] 23601 13.7	
1.2	10/03→12/11	44 / 60										
1.2	08/10→12/11	51 / 69	Luc		2407303	[+] 24073 16.4		Luc		82060100		
			Luc		82063300			Bos		91061600	ø 203.2 x 37	
				PRO	92041503	ø 257 x 12 x 40.5				97031000		
								Bos		84061601	bore ø 19 ø 203.2 x 37	
									PRO	92061103	ø 240 x 11 x 40	
										94019900	ø 203,2 x 48.5	
		347200	Luc		2407302	[–] 24073 16.4		Luc		2360102	[–] 23601 13.7	
1.2	10/03→12/11	59 / 80										
1.3 JTD	10/03→12/11	51 / 70										
1.4 16V	10/03→12/11	70 / 95	Luc		2407304	[+] 24073 16.4		Luc		82060100		
			Luc		82072200			Bos		91061600	ø 203.2 x 37	
			Luc		82063300					97031000		
				PRO	92069603	ø 257 x 22 x 40.5		Bos		84061600	bore ø 20.6 ø 203.2 x 37	
									PRO	92061103	ø 240 x 11 x 40	
										94019900	ø 203,2 x 48.5	
		347300	Luc		2407302	[–] 24073 16.4		Luc		2360102	[–] 23601 13.7	
1.3 D Multijet	09/06→12/11	55 / 75										
1.3 D Multijet	09/06→12/11	66 / 90										
1.3 D Multijet	05/07→12/11	77 / 105	Luc		2407304	[+] 24073 16.4		Luc		82060100		
1.4	02/06→12/11	57 / 78										
1.4 LPG	11/10→12/11	57 / 78	Luc		82072200			Bos		91061600	ø 203.2 x 37	
			Luc		82063300					97031000		
				PRO	92069603	ø 257 x 22 x 40.5			PRO	92061103	ø 240 x 11 x 40	
										94019900	ø 203,2 x 48.5	
YPSILON (846) 05/11→												
		347400	Ate		2532301	[+] 25323 17.3				91065300	ø 203.2 x 38	
0.9 CNG	05/11→	63 / 86								97031500		
		347500	Ate		2532301	[+] 25323 17.3				91065300	ø 203.2 x 38	
0.9 Twinair	05/11→	63 / 86										
1.3 Multijet	05/11→	70 / 95	Ate		82029200							
		347600	Ate		2532301	[+] 25323 17.3				91065300	ø 203.2 x 38	
1.2	05/11→	51 / 69										
1.2 Bifuel	05/11→	49 / 67	Ate		82029200							
				PRO	92236703	ø 257 x 12 x 40.5						
				PRO	92252803	ø 284 x 22 x 43.3						
ZETA (220) 05/95→09/02												
		347700	Gir		2180101	[+] 21801 19.3		Ate		2127501	[+] 21275 16.9	⊕ rear disc brake
2.0 16V (220AL5)	05/98→07/00	97 / 132										
2.0 16V (220AQ5)	07/00→09/02	100 / 136	Luc		82055400		2x	Ate		82030900		⊕ rear disc brake
2.0 JTD	04/00→09/02	80 / 109										
2.0 JTD (220AN5)	09/99→09/02	80 / 109	Luc		82063300			Ate		82062900		
2.0 Turbo (220AD5, 220CD5)	05/95→09/02	108 / 147										

I - M

LANCIA

LANCIA

ZETA (220) 05/95→09/02

2.1 TD (220AJ5)	05/96→09/99	80 / 109		PRO	92074003	ø 281 x 26 x 43.5		Ben		91047800	ø 255 x 61	⊕ rear drum brake
								Ben		97009600		⊕ rear drum brake
								Ben		84047800	bore ø 19 ø 255 x 61	⊕ rear drum brake
					92074100	ø 295 x 10 x 56	⊕ rear disc brake					
					94015000	ø 255,0 x 67	⊕ rear drum brake					
								Ate		91054700	ø 180 x 31	⊕ rear disc brake

LAND ROVER

LAND ROVER

DEFENDER Cabrio (LD) 09/90→

		347800	Lkh		2145901	[–] 21459 18.5	→VHA701009	Lkh		2034402	[–] 20344 15	⊕ rear disc brake wheelb. 2300 mm BM 90
2.2 Td4 4x4	08/11→	90 / 122										
2.4 Td4 4x4	05/07→	90 / 122	Lkh		2151901	[–] 21519 18	VLA930456→	Lkh		2347101	[–] 23471 15	⊕ rear disc brake →V1A614447 wheelb. 2800 mm wheelb. 3300 mm BM 110 BM 130
2.5 90 TDI 4x4	09/90→	83 / 113										
2.5 D 4x4	09/90→09/01	51 / 69										
2.5 Td5 4x4	06/98→	90 / 122	Lkh		82049900		vented disc	Lkh		2347103	[–] 23471 17.9	V1A614448→ wheelb. 2800 mm wheelb. 3300 mm ⊕ rear disc brake BM 110 BM 130
3.9 4x4	04/98→09/00	134 / 182										
			Lkh		82051800		solid disc					
					92040600	ø 298 x 14 x 70	→VKA930455	Gir		91048100	ø 279.4 x 57	wheelb. 2800 mm wheelb. 3300 mm BM 110 BM 130 ⊕ reinf.brake
					92061300	ø 298 x 24 x 70	VLA930456→			91055700	ø 254 x 70	⊕ rear drum brake
										91069900	ø 254 x 39	wheelb. 2300 mm BM 90
										97016600		
									PRO	92230503	ø 298 x 14.2 x 59.1	wheelb. 2800 mm wheelb. 3300 mm BM 110 BM 130
										94021800	ø 279,4 x 68	⊕ rear drum brake
										94037500	ø 254 x 55.8	⊕ rear drum brake wheelb. 2300 mm BM 90

DEFENDER Pickup (LD_) 04/98→

		347900	Lkh		2145901	[–] 21459 18.5	→VHA701009	Lkh		2034402	[–] 20344 15	⊕ rear disc brake wheelb. 2300 mm BM 90
2.2 Td4 4x4	08/11→	90 / 122										
2.4 Td4 4x4	05/07→	90 / 122	Lkh		2151901	[–] 21519 18	VLA930456→	Lkh		2347101	[–] 23471 15	⊕ rear disc brake →V1A614447 wheelb. 2800 mm wheelb. 3300 mm BM 110 BM 130
2.5 Td5 4x4	06/98→	90 / 122										
2.8 4x4	11/98→09/03	140 / 190	Lkh		82049900		vented disc	Lkh		2347103	[–] 23471 17.9	V1A614448→ wheelb. 2800 mm wheelb. 3300 mm ⊕ rear disc brake BM 110 BM 130
3.9 4x4	04/98→09/00	134 / 182										
			Lkh		82051800		solid disc					
					92040600	ø 298 x 14 x 70	→VKA930455	Gir		91048100	ø 279.4 x 57	wheelb. 2800 mm wheelb. 3300 mm BM 110 BM 130 ⊕ reinf.brake
					92061300	ø 298 x 24 x 70	VLA930456→			91055700	ø 254 x 70	⊕ rear drum brake
										91069900	ø 254 x 39	wheelb. 2300 mm BM 90
										97016600		
									PRO	92230503	ø 298 x 14.2 x 59.1	wheelb. 2800 mm wheelb. 3300 mm BM 110 BM 130
										94021800	ø 279,4 x 68	⊕ rear drum brake
										94037500	ø 254 x 55.8	⊕ rear drum brake wheelb. 2300 mm BM 90

DEFENDER Pick-up (LD_) 04/98→ → DEFENDER Pickup (LD_), Page 538

DEFENDER Platform/Chassis (LD) 01/07→

		348000	Lkh		2145901	[–] 21459 18.5	→VHA701009	Lkh		2034402	[–] 20344 15	⊕ rear disc brake wheelb. 2300 mm BM 90
2.2 Td4 4x4	08/11→	90 / 122										
2.4 TD4 4x4	01/07→	90 / 122	Lkh		2151901	[–] 21519 18	VLA930456→	Lkh		2347101	[–] 23471 15	⊕ rear disc brake →V1A614447 wheelb. 2800 mm wheelb. 3300 mm BM 110 BM 130
					92040600	ø 298 x 14 x 70	→VKA930455	Lkh		2347103	[–] 23471 17.9	V1A614448→ wheelb. 2800 mm wheelb. 3300 mm ⊕ rear disc brake BM 110 BM 130
					92061300	ø 298 x 24 x 70	VLA930456→					
								Gir		91048100	ø 279.4 x 57	wheelb. 2800 mm wheelb. 3300 mm BM 110 BM 130 ⊕ reinf.brake
										91055700	ø 254 x 70	⊕ rear drum brake
										91069900	ø 254 x 39	wheelb. 2300 mm BM 90

→

		kW / hp									
DEFENDER Platform/Chassis (LD) 01/07→											
		348000									
2.2 Td4 4x4	08/11→	90 / 122							97016600		
2.4 TD4 4x4	01/07→	90 / 122						PRO	92230503	ø 298 x 14.2 x 59.1	wheelb. 2800 mm wheelb. 3300 mm BM 110 BM 130
									94021800	ø 279,4 x 68	⊕ rear drum brake
									94037500	ø 254 x 55.8	⊕ rear drum brake wheelb. 2300 mm BM 90
DEFENDER Pritsche/Fahrgestell (LD) 01/07→ → **DEFENDER Platform/Chassis (LD), Page 538**											
DEFENDER Station Wagon (LD) 09/90→											
		348100	Lkh		2145901	[–] 21459 18.5	→VHA701009	Lkh	2034402	[–] 20344 15	⊕ rear disc brake wheelb. 2300 mm BM 90
2.2 Td4 4x4	08/11→	90 / 122									
2.4 Td4 4x4	05/07→	90 / 122	Lkh		2151901	[–] 21519 18	VLA930456→	Lkh	2347101	[–] 23471 15	⊕ rear disc brake →V1A614447 wheelb. 2800 mm wheelb. 3300 mm BM 110 BM 130
2.5 D 4x4	09/90→09/01	51 / 69									
2.5 Td5 4x4	06/98→	90 / 122	Lkh		82049900		vented disc	Lkh	2347103	[–] 23471 17.9	V1A614448→ wheelb. 2800 mm wheelb. 3300 mm ⊕ rear disc brake BM 110 BM 130
2.8 4x4	11/98→09/03	140 / 190									
3.9 4x4	04/98→09/00	134 / 182	Lkh		82051800		solid disc				
3.9 V8 4x4	11/98→	136 / 185			92040600	ø 298 x 14 x 70	→VKA930455	Gir	91048100	ø 279.4 x 57	wheelb. 2800 mm wheelb. 3300 mm BM 110 BM 130 ⊕ reinf.brake
					92061300	ø 298 x 24 x 70	VLA930456→		91055700	ø 254 x 70	⊕ rear drum brake
									91069900	ø 254 x 39	wheelb. 2300 mm BM 90
									97016600		
								PRO	92230503	ø 298 x 14.2 x 59.1	wheelb. 2800 mm wheelb. 3300 mm BM 110 BM 130
									94021800	ø 279,4 x 68	⊕ rear drum brake
									94037500	ø 254 x 55.8	⊕ rear drum brake wheelb. 2300 mm BM 90
DISCOVERY II (LJ, LT) 11/98→06/04											
		348200							91055700	ø 254 x 70	
2.5 Td5 4x4	11/98→06/04	100 / 136									
4.0 4x4	11/98→12/02	140 / 190									
4.6 4x4	09/99→12/02	165 / 224									
4.6 4x4	09/02→12/03	168 / 228									
4.6 4x4	09/02→06/04	162 / 220									
		348300	Luc		2345201	[–] 23452 19		Luc	2345801	[–] 23458 15	
2.5 Td5 4x4	01/99→06/04	102 / 139									
4.0 V8 4x4	11/98→06/04	136 / 185	Luc		82063100				91055700	ø 254 x 70	
					92129700	ø 297 x 25 x 91.5			92095200	ø 304 x 12.6 x 62.7	
DISCOVERY III (TAA) 07/04→09/09											
		348400	Luc		2419101	[o] 24191 18.1		Luc	2419201	[o] 24192 17.3	
2.7 TD 4x4	07/04→09/09	140 / 190									
			Luc	epad	2419181	[o] 24191 18.1		Luc	2419281	[o] 24192 17.3	
					98039500	L1184	→6A414975		98039400	L1183	
			Luc		82073500			Luc	82073600		
					92134500	ø 317 x 30 x 62			92147600	ø 325 x 20 x 58.7	
				PRO	92134503	ø 317 x 30 x 62			92147603	ø 325 x 20 x 58.7	
									91070900	ø 210 x 30	
		348500	Luc		2345201	[–] 23452 19		Luc	2345801	[–] 23458 15	
4.0 4x4	02/05→09/09	160 / 218									
			Luc		82063100				92095200	ø 304 x 12.6 x 62.7	
					92129700	ø 297 x 25 x 91.5					
		348600	Luc		2419101	[o] 24191 18.1		Luc	2419201	[o] 24192 17.3	
4.0 4x4	02/05→09/09	161 / 219									
4.0 V6 4x4	10/04→09/09	156 / 212	Luc	epad	2419181	[o] 24191 18.1		Luc	2419281	[o] 24192 17.3	
					98039500	L1184	→6A414975		98039400	L1183	
			Luc		82073500			Luc	82073600		
					92134500	ø 317 x 30 x 62	6A393141→		92147600	ø 325 x 20 x 58.7	6A414975→
				PRO	92134503	ø 317 x 30 x 62	6A393141→		92147603	ø 325 x 20 x 58.7	6A414975→
									91070900	ø 210 x 30	

DISCOVERY III (TAA) 07/04→09/09

348700															
4.0 4x4	09/09→	160 / 218	Luc		2419101	[o] 24191 18.1	⊖ pneum. susp.		Luc		2419201	[o] 24192 17.3	AA547441→ ⊖ pneum. susp.
			Luc	epad	2419181	[o] 24191 18.1	⊖ pneum. susp.		Luc		2419204	[o] 24192 17.3	⊕ pneum. susp. →AA547440 ⊖ pneum. susp.
			TRW		2502201	[o] 25022 18.6	⊕ pneum. susp.		Luc	epad	2419281	[o] 24192 17.3	AA547441→ ⊖ pneum. susp.
					98039500	L1184			Luc	epad	2419282	[o] 24192 17.3	⊕ pneum. susp. →AA547440 ⊖ pneum. susp.
			Luc		82073500		⊖ pneum. susp.				98039400	L1183	
			TRW		82505400		⊕ pneum. susp.		Luc		82073600		⊖ pneum. susp.
					92134500	ø 317 x 30 x 62	⊖ pneum. susp.				92147600	ø 325 x 20 x 58.7	⊖ pneum. susp.
					92162000	ø 360 x 30 x 62	⊕ pneum. susp.				92147700	ø 350 x 20 x 58.9	⊕ pneum. susp.
				PRO	92134503	ø 317 x 30 x 62	⊖ pneum. susp.			PRO	92147603	ø 325 x 20 x 58.7	⊖ pneum. susp.
				PRO	92162003	ø 360 x 30 x 62	⊕ pneum. susp.			PRO	92147703	ø 350 x 20 x 58.9	⊕ pneum. susp.
											91070900	ø 210 x 30	
348800													
4.4 4x4	07/04→09/09	220 / 299	Luc		2419101	[o] 24191 18.1			Luc		2419201	[o] 24192 17.3	
			Luc	epad	2419181	[o] 24191 18.1			Luc	epad	2419281	[o] 24192 17.3	
					98039500	L1184	→6A414976				98039400	L1183	
			Luc		82073500				Luc		82073600		
					92134600	ø 337 x 30 x 61.9				PRO	92175503	ø 354 x 20 x 75	
				PRO	92134603	ø 337 x 30 x 61.9					91062400	ø 210 x 30	

DISCOVERY III Commercial (TAA) 07/04→

348900													
2.7 TD	07/04→	140 / 190	Luc		2419101	[o] 24191 18.1			Luc		2419201	[o] 24192 17.3	
			Luc	epad	2419181	[o] 24191 18.1			Luc	epad	2419281	[o] 24192 17.3	
					98039500	L1184	→6A414975				98039400	L1183	
			Luc		82073500				Luc		82073600		
					92134500	ø 317 x 30 x 62					92147600	ø 325 x 20 x 58.7	
				PRO	92134503	ø 317 x 30 x 62				PRO	92147603	ø 325 x 20 x 58.7	
											91070900	ø 210 x 30	

DISCOVERY IV (LA) 09/09→

349000													
2.7 TD 4x4	09/09→	140 / 190	Luc		2419101	[o] 24191 18.1	⊖ pneum. susp.		Luc		2419201	[o] 24192 17.3	⊖ pneum. susp.
3.0 4x4	08/13→	250 / 340	Luc	epad	2419181	[o] 24191 18.1	⊖ pneum. susp.		Luc		2419204	[o] 24192 17.3	⊕ pneum. susp.
			TRW		2502201	[o] 25022 18.6	⊕ pneum. susp.		Luc	epad	2419281	[o] 24192 17.3	⊖ pneum. susp.
					98039500	L1184			Luc	epad	2419282	[o] 24192 17.3	⊕ pneum. susp.
			Luc		82063100		⊖ pneum. susp.				98039400	L1183	
			Luc		82073500		⊖ pneum. susp.		Luc		82073600		⊖ pneum. susp.
			TRW		82505400		⊕ pneum. susp.				92147600	ø 325 x 20 x 58.7	⊖ pneum. susp.
					92134500	ø 317 x 30 x 62	⊖ pneum. susp.				92147700	ø 350 x 20 x 58.9	⊕ pneum. susp.
					92162000	ø 360 x 30 x 62	⊕ pneum. susp.			PRO	92147603	ø 325 x 20 x 58.7	⊖ pneum. susp.
				PRO	92134503	ø 317 x 30 x 62	⊖ pneum. susp.			PRO	92147703	ø 350 x 20 x 58.9	⊕ pneum. susp.
				PRO	92162003	ø 360 x 30 x 62	⊕ pneum. susp.				91070900	ø 210 x 30	
349100													
3.0 SDV6 4x4	11/09→	188 / 256	Luc		2419101	[o] 24191 18.1	⊖ pneum. susp.		Luc		2419201	[o] 24192 17.3	AA547441→ ⊖ pneum. susp.
			Luc	epad	2419181	[o] 24191 18.1	⊖ pneum. susp.		Luc		2419204	[o] 24192 17.3	⊕ pneum. susp. →AA547440 ⊖ pneum. susp.
			TRW		2502201	[o] 25022 18.6			Luc	epad	2419281	[o] 24192 17.3	AA547441→ ⊖ pneum. susp.

30 kW / hp

DISCOVERY IV (LA) 09/09→

349100													
3.0 SDV6 4x4	11/09→	188 / 256		98039500	L1184		Luc	2419282	[o] 24192 17.3	⊕ pneum. susp. →AA547440 ⊖ pneum. susp.
			TRW	82505400		⊕ pneum. susp.		98039400	L1183	
				92162000	ø 360 x 30 x 62		Luc	82073600		⊖ pneum. susp.
			PRO	92162003	ø 360 x 30 x 62			92147700	ø 350 x 20 x 58.9	
								92147703	ø 350 x 20 x 58.9	
								91070900	ø 210 x 30	
349200			TRW	2502201	[o] 25022 18.6		Luc	2419201	[o] 24192 17.3	AA547441→ ⊖ pneum. susp.
3.0 TD 4x4	09/09→	180 / 245								
3.0 TD 4x4	09/09→	200 / 272		98039500	L1184		Luc	2419204	[o] 24192 17.3	⊕ pneum. susp. →AA547440 ⊖ pneum. susp.
3.0 TD 4x4	05/10→	155 / 211								
3.0 TD 4x4	07/12→	183 / 249	TRW	82505400		⊕ pneum. susp.	Luc	2419281	[o] 24192 17.3	AA547441→ ⊖ pneum. susp.
				92162000	ø 360 x 30 x 62		Luc	2419282	[o] 24192 17.3	⊕ pneum. susp. →AA547440 ⊖ pneum. susp.
			PRO	92162003	ø 360 x 30 x 62			98039400	L1183	
							Luc	82073600		⊖ pneum. susp.
								92147700	ø 350 x 20 x 58.9	
								92147703	ø 350 x 20 x 58.9	
								91070900	ø 210 x 30	
349300			TRW	2502201	[o] 25022 18.6	⊖ arm.veh.	Luc	2419201	[o] 24192 17.3	⊖ arm.veh. AA5477441→
5.0 V8 4x4	09/09→	276 / 375		98039500	L1184		Luc	2419204	[o] 24192 17.3	⊖ arm.veh. →AA547440
			TRW	82505400		⊖ arm.veh.	Luc	2419281	[o] 24192 17.3	⊖ arm.veh. AA5477441→
				92162000	ø 360 x 30 x 62	⊖ arm.veh.	Luc	2419282	[o] 24192 17.3	⊖ arm.veh. →AA547440
			PRO	92162003	ø 360 x 30 x 62	⊖ arm.veh.		98039400	L1183	
							Luc	82073600		⊖ arm.veh.
								92147700	ø 350 x 20 x 58.9	⊖ arm.veh.
								92147703	ø 350 x 20 x 58.9	⊖ arm.veh.
								91070900	ø 210 x 30	

DISCOVERY IV Van (LA) 09/09→

349400				92162000	ø 360 x 30 x 62	→AA222221	Luc	2419201	[o] 24192 17.3	
3.0 SDV6	11/09→	188 / 256								
3.0 TD	09/09→	180 / 245	PRO	92162003	ø 360 x 30 x 62	→AA222221	Luc	2419281	[o] 24192 17.3	
3.0 TD	05/10→	155 / 211								
							Luc	82073600		
								92147700	ø 350 x 20 x 58.9	⊖ arm.veh.
								92147703	ø 350 x 20 x 58.9	⊖ arm.veh.
								91070900	ø 210 x 30	

DISCOVERY Mk II (LJ, LT) 11/98→06/04 → DISCOVERY II (LJ, LT), Page 539

FREELANDER (LN) 02/98→10/06

349500			Luc	2151504	[–] 21515 18	→YA999999		91055600	ø 254 x 38	→YA999999
1.8 16V 4x4	11/00→10/06	86 / 117								
1.8 i 16V 4x4	02/98→11/00	88 / 120	Luc	2361501	[–] 23615 17.5	1A000001→		91063600	ø 254 x 45	1A000001→
2.0 DI 4x4	02/98→11/00	72 / 98								
2.0 Td4 4x4	11/00→10/06	82 / 112	Luc	2151503	[+] 21515 18	→YA999999		97032700		→YA999999
2.0 Td4 4x4	03/01→10/06	80 / 109								
2.5 V6 4x4	11/00→10/06	130 / 177	Luc	82060400		1A000001→		94030900	ø 254 x 45.5	→YA999999
			Luc	82506900		→YA999999		94032800	ø 253,0 x 57.3	1A000001→
				92102900	ø 262 x 14 x 51.2	→YA999999				
			PRO	92115703	ø 277 x 21 x 51.2	1A000001→				

I - M

		kW / hp											
FREELANDER 2 (FA_) 10/06→													
		349600	Ate		2412301	[–] 24123 20.3		TRW		2449602	[–] 24496 16.9	DH000001→
2.0 Si4 4x4	10/11→	177 / 241	Ate		82039300			TRW		2453702	[–] 24537 15.7	→CH999999
			Ate		82062900			Luc		82073800		DH000001→
					92162300	ø 316 x 28 x 52		Luc		82074100		→CH999999
				PRO	92162303	ø 316 x 28 x 52		Luc		82063300		
										92162800	ø 302 x 20 x 66	→CH999999
									PRO	92162803	ø 302 x 20 x 66	→CH999999
										91067800	ø 185 x 30	
		349700	Ate		2412301	[–] 24123 20.3		TRW		2453701	[–] 24537 15.7	
2.2 eD4	08/10→	110 / 150										
2.2 SD4 4x4	08/10→	140 / 190										
2.2 TD4 4x4	10/06→	110 / 150	Ate		82039300			Luc		82074200		
2.2 TD4 4x4	10/06→	115 / 156										
2.2 TD4 4x4	10/06→	118 / 160	Ate		82062900			Luc		82063300		
2.2 TD4 4x4	01/07→	112 / 152										
					92159200	ø 300 x 28 x 52				92162700	ø 302 x 12 x 66	
				PRO	92159203	ø 300 x 28 x 52			PRO	92162703	ø 302 x 12 x 66	
										91067800	ø 185 x 30	
		349800	Ate		2412301	[–] 24123 20.3		TRW		2453702	[–] 24537 15.7	
3.2 4x4	10/06→	171 / 233	Ate		82039300			Luc		82074100		
			Ate		82062900			Luc		82063300		
					92162300	ø 316 x 28 x 52				92162800	ø 302 x 20 x 66	
				PRO	92162303	ø 316 x 28 x 52			PRO	92162803	ø 302 x 20 x 66	
										91067800	ø 185 x 30	
FREELANDER 2 Commercial (FA_) 10/06→													
		349900	Ate		2412301	[–] 24123 20.3		TRW		2453701	[–] 24537 15.7	
2.2 TD4	10/06→	118 / 160	Ate		82039300			Luc		82074200		
			Ate		82062900			Luc		82063300		
					92159200	ø 300 x 28 x 52				92162700	ø 302 x 12 x 66	
				PRO	92159203	ø 300 x 28 x 52			PRO	92162703	ø 302 x 12 x 66	
										91067800	ø 185 x 30	
FREELANDER Soft Top 02/98→10/06													
		350000	Luc		2151504	[–] 21515 18	→YA999999			91055600	ø 254 x 38	→YA999999
1.8 4x4	10/00→09/03	86 / 117										
1.8 i 16V 4x4	02/98→10/06	88 / 120	Luc		2361501	[–] 23615 17.5	1A000001→			91063600	ø 254 x 45	1A000001→
2.0 DI 4x4	02/98→10/06	72 / 98										
2.0 TD4 4x4	10/00→10/06	82 / 112	Luc		2151503	[+] 21515 18	→YA999999			97032700		→YA999999
			Luc		82060400		1A000001→			94030900	ø 254 x 45.5	→YA999999
			Luc		82506900		→YA999999			94032800	ø 253,0 x 57.3	1A000001→
					92102900	ø 262 x 14 x 51.2	→YA999999					
				PRO	92115703	ø 277 x 21 x 51.2	1A000001→					
LR2 (FA_) 10/06→ → FREELANDER 2 (FA_), Page 542													
LR3 III (TAA) 07/04→09/09 → DISCOVERY III (TAA), Page 539													
LR4 IV (LA) 09/09→ → DISCOVERY IV (LA), Page 540													
RANGE ROVER II (LP) 07/94→03/02													
		350100	Luc		2345201	[–] 23452 19		Luc		2345801	[–] 23458 15	
2.5 D 4x4	08/94→03/02	83 / 113										
2.5 TD 4x4	07/94→03/02	100 / 136	Luc		82063100			Luc		82063100		
3.9 4x4	07/94→03/02	140 / 190										
4.0 4x4	06/98→03/02	136 / 185										
4.6 4x4	07/94→03/02	165 / 224			92093600	ø 297 x 25 x 64.6				91055700	ø 254 x 70	
4.6 4x4	06/98→03/02	160 / 218										

RANGE ROVER II (LP) 07/94→03/02

		kW / hp											
		350100											
2.5 D 4x4	08/94→03/02	83 / 113								97016600		
2.5 TD 4x4	07/94→03/02	100 / 136								92095200	ø 304 x 12.6 x 62.7	
3.9 4x4	07/94→03/02	140 / 190										
4.0 4x4	06/98→03/02	136 / 185										
4.6 4x4	07/94→03/02	165 / 224										
4.6 4x4	06/98→03/02	160 / 218										

RANGE ROVER III (LM) 03/02→08/12

		350200	Ate		2339703	[o] 23397 19.4	→5A999999 ⊖ arm.veh. ⊕ arm.veh.	Ate		2148701	[o] 21487 17.2	→5A999999 ⊖ arm.veh.
3.0 TD 6 4x4	03/02→08/12	130 / 177	Luc		2419101	[o] 24191 18.1	6A000001→ ⊖ arm.veh.	Ate	epad	2148781	[o] 21487 17.2	→5A999999 ⊖ arm.veh.
			Luc	epad	2419181	[o] 24191 18.1	6A000001→ ⊖ arm.veh.	Luc		2419201	[o] 24192 17.3	⊖ arm.veh. 6A000001→
					92134400	ø 344 x 30 x 75.8	→5A999999 ⊖ arm.veh.	Luc	epad	2419281	[o] 24192 17.3	⊖ arm.veh. 6A000001→
				PRO	92185103	ø 344 x 30 x 76	6A000001→ ⊖ arm.veh.			92095200	ø 304 x 12.6 x 62.7	→6A228066 ⊖ arm.veh.
										92174100	ø 354 x 11.9 x 74.9	6A228067→ ⊖ arm.veh.
										91062400	ø 210 x 30	
		350300	Bre		2021701	[o] 20217 17.3	→MY 2009 ⊖ arm.veh.	Ate		2148703	[o] 21487 17.2	→9A999999 ⊖ arm.veh.
3.6 TD 8 4x4	04/06→08/12	200 / 272	TRW		2502101	[o] 25021 18.6	MY 2010→ ⊖ arm.veh.	Luc		2419201	[o] 24192 17.3	→9A999999 ⊕ arm.veh.
					98039200	L780	⊕ arm.veh.	Luc		2419204	[o] 24192 17.3	AA000001→ ⊖ arm.veh.
					98039600	L845	⊖ arm.veh.	Luc	epad	2419281	[o] 24192 17.3	→9A999999 ⊕ arm.veh.
			TRW		82505400		MY 2010→	Luc	epad	2419282	[o] 24192 17.3	AA000001→ ⊖ arm.veh.
				PRO	92178403	ø 360 x 30 x 81	⊖ arm.veh.			98039300	L1220	⊕ arm.veh.
										98039700	L1270	⊖ arm.veh.
								Luc		82073600		→9A999999 ⊕ arm.veh.
								Luc		82505500		AA000001→
								Ate		82057500		→9A999999 ⊖ arm.veh.
								Ate		82062900		→9A999999 ⊖ arm.veh.
									PRO	92175503	ø 354 x 20 x 75	⊖ arm.veh.
										91062400	ø 210 x 30	
		350400	Bre		2021701	[o] 20217 17.3	⊖ arm.veh.	Luc		2419201	[o] 24192 17.3	⊖ arm.veh.
4.2 4x4	05/05→08/12	291 / 396			98039200	L780	⊕ arm.veh.	Luc	epad	2419281	[o] 24192 17.3	⊖ arm.veh.
					98039300	L1220	⊕ arm.veh.			98039700	L1270	⊖ arm.veh.
					98039600	L845	⊖ arm.veh.	Luc		82073600		
				PRO	92178403	ø 360 x 30 x 81	⊖ arm.veh.		PRO	92175503	ø 354 x 20 x 75	⊖ arm.veh.
										91062400	ø 210 x 30	
		350500	Ate		2339703	[o] 23397 19.4	⊖ arm.veh.	Ate		2148703	[o] 21487 17.2	⊖ arm.veh. →5A999999
4.4 4x4	03/02→08/12	210 / 286			98039200	L780	⊕ arm.veh.	Luc		2419201	[o] 24192 17.3	⊖ arm.veh. 6A000001→
					98039600	L845	⊖ arm.veh.	Luc	epad	2419281	[o] 24192 17.3	⊖ arm.veh. 6A000001→
			Ate		82062900					98039300	L1220	⊕ arm.veh.
			Ate		82506800					98039700	L1270	⊖ arm.veh.
					92134400	ø 344 x 30 x 75.8	⊖ arm.veh.	Luc		82073600		
										92174100	ø 354 x 11.9 x 74.9	⊖ arm.veh.
									PRO	92175503	ø 354 x 20 x 75	⊖ arm.veh.
										91062400	ø 210 x 30	
		350600	Luc		2419101	[o] 24191 18.1	⊖ arm.veh.	Ate		2148703	[o] 21487 17.2	→V5A9999999 ⊖ arm.veh.
4.4 4x4	08/04→08/12	220 / 299										
4.4 4x4	05/05→08/12	225 / 306										

		kW / hp											
RANGE ROVER III (LM) 03/02→08/12													
350600			Luc	epad	**2419181**	[o] 24191 18.1	⊖ arm.veh.	Luc		**2419201**	[o] 24192 17.3	V6A000001→ ⊖ arm.veh.
4.4 4x4	08/04→08/12	220 / 299			**98039200**	L780	⊕ arm.veh.	Luc	epad	**2419281**	[o] 24192 17.3	V6A000001→ ⊖ arm.veh.
4.4 4x4	05/05→08/12	225 / 306			**98039600**	L845	⊖ arm.veh.			**98039300**	L1220	⊕ arm.veh.
			Luc		**82073500**					**98039700**	L1270	⊖ arm.veh.
				PRO	**92185103**	ø 344 x 30 x 76	⊖ arm.veh.	Luc		**82073600**		V6A000001→
								Ate		**82057500**		→V5A9999999
								Ate		**82062900**		→V5A9999999
										92174100	ø 354 x 11.9 x 74.9	→6A0000000 ⊖ arm.veh.
									PRO	**92175503**	ø 354 x 20 x 75	6A000001→ ⊖ arm.veh.
										91062400	ø 210 x 30	
350700			Bre		**2465901**	[–] 24659 16.9	⊖ arm.veh.	TRW		**2508501**	[o] 25085 17.1	⊖ arm.veh.
4.4 TD V8 4x4	07/10→08/12	230 / 313			**98039200**	L780	⊕ arm.veh.			**98039300**	L1220	⊕ arm.veh.
					98039600	L845	⊖ arm.veh.			**98039700**	L1270	⊖ arm.veh.
			Luc		**82073500**			Luc		**82073600**		V6A000001→
			Bre		**82539200**		⊖ arm.veh.	Ate		**82057500**		→V5A9999999
								Ate		**82062900**		→V5A9999999
									PRO	**92224803**	ø 365 x 20 x 75	⊖ arm.veh.
										91062400	ø 210 x 30	
350800			Bre		**2465901**	[–] 24659 16.9	⊖ arm.veh.	TRW		**2508501**	[o] 25085 17.1	⊖ arm.veh.
5.0 V8 4x4	09/09→08/12	276 / 375			**98039200**	L780	⊕ arm.veh.			**98039300**	L1220	⊕ arm.veh.
5.0 V8 4x4	09/09→08/12	375 / 510			**98048100**	L830	⊖ arm.veh.			**98039700**	L1270	⊖ arm.veh.
			Bre		**82539200**		⊖ arm.veh.	Luc		**82505500**		
				PRO	**92224803**	ø 365 x 20 x 75	⊖ arm.veh.					
										91062400	ø 210 x 30	
RANGE ROVER IV (LG) 08/12→													
350900			Bre		**2465901**	[–] 24659 16.9		TRW		**2572001**	[o] 25720 17.3	
3.0 TD 4x4	08/12→	183 / 249			**98048200**	L1424				**98048300**	L951	
3.0 TD 4x4	08/12→	190 / 258										
4.4 TD V8 4x4	08/12→	250 / 340	Bre		**82539200**			Luc		**82073600**		
5.0 V8 4x4	08/12→	375 / 510			**TPM0011**					**TPM0011**		
RANGE ROVER EVOQUE (LV) 06/11→													
351000			Ate		**2412305**	[–] 24123 20.3		TRW		**2449602**	[–] 24496 16.9	
2.0 4x4	06/11→	177 / 241			**82039300**			Luc		**82054900**		
2.2 eD4	06/11→	110 / 150	Ate		**82062900**					**92159300**	ø 302 x 11 x 50.8	
2.2 SD4 4x4	06/11→	140 / 190							PRO	**92159303**	ø 302 x 11 x 50.8	
2.2 TD4 4x4	06/11→	110 / 150			**92159200**	ø 300 x 28 x 52						
				PRO	**92159203**	ø 300 x 28 x 52				**TPM0011**		
					TPM0011							
RANGE ROVER Mk II (LP) 07/94→03/02 → RANGE ROVER II (LP), Page 542													
RANGE ROVER Mk III (LM) 03/02→08/12 → RANGE ROVER III (LM), Page 543													
RANGE ROVER SPORT (LS) 02/05→													
351100			Bre		**2021701**	[o] 20217 17.3	⊕ rim size 18" rim size 19"	Luc		**2419201**	[o] 24192 17.3	
2.7 TDVM 4x4	02/05→	140 / 190	Luc		**2419101**	[o] 24191 18.1	⊕ rim size 17"	Luc	epad	**2419281**	[o] 24192 17.3	

RANGE ROVER SPORT (LS) 02/05→

351100													
2.7 TDVM 4x4	02/05→	140 / 190	Luc	epad	2419181	[o] 24191 18.1	⊕ rim size 17"			98039400	L1183	
					98033900	L1209	→6A999999 ⊕ rim size 18" rim size 19"	Luc		82073600		
					98034000	L1230	⊕ rim size 17"			92147600	ø 325 x 20 x 58.7	6A953689→ ⊕ rim size 17"
					98039900	L1209	7A000001→ ⊕ rim size 18" rim size 19"			92147700	ø 350 x 20 x 58.9	⊕ rim size 18" rim size 19"
			Luc		82073500		⊕ rim size 17"		PRO	92147603	ø 325 x 20 x 58.7	6A953689→ ⊕ rim size 17"
					92134500	ø 317 x 30 x 62	⊕ rim size 17"		PRO	92147703	ø 350 x 20 x 58.9	⊕ rim size 18" rim size 19"
					92162000	ø 360 x 30 x 62	⊕ rim size 18" rim size 19"			91070900	ø 210 x 30	
				PRO	92134503	ø 317 x 30 x 62	⊕ rim size 17"					
				PRO	92162003	ø 360 x 30 x 62	⊕ rim size 18" rim size 19"					
351200													
3.0 TD 4x4	09/09→	180 / 245	TRW		2502201	[o] 25022 18.6		Luc		2419201	[o] 24192 17.3	AA257941→ →BA716231
3.0 TD 4x4	06/11→	188 / 256			98034000	L1230		Luc		2419204	[o] 24192 17.3	→AA257940
			TRW		82505400			Luc	epad	2419281	[o] 24192 17.3	AA257941→ →BA716231
					92162000	ø 360 x 30 x 62	⊖ Middle East ⊖ Africa	Luc	epad	2419282	[o] 24192 17.3	→AA257940
				PRO	92162003	ø 360 x 30 x 62	⊖ Middle East ⊖ Africa			98039400	L1183	
								Luc		82073600		AA256676→
										92147700	ø 350 x 20 x 58.9	
									PRO	92147703	ø 350 x 20 x 58.9	
										91070900	ø 210 x 30	
351300													
3.0 TD 4x4	08/12→	183 / 249			98034000	L1230		Luc		2419201	[o] 24192 17.3	AA257941→ →BA716231
					92162000	ø 360 x 30 x 62	⊖ Middle East ⊖ Africa	Luc		2419204	[o] 24192 17.3	→AA257940
				PRO	92162003	ø 360 x 30 x 62	⊖ Middle East ⊖ Africa	Luc	epad	2419281	[o] 24192 17.3	AA257941→ →BA716231
								Luc	epad	2419282	[o] 24192 17.3	→AA257940
										98039400	L1183	
								Luc		82073600		AA256676→
										92147700	ø 350 x 20 x 58.9	
									PRO	92147703	ø 350 x 20 x 58.9	
										91070900	ø 210 x 30	
351400													
3.0 TD V6 4x4	05/10→	155 / 211	TRW		2502201	[o] 25022 18.6		Luc		2419201	[o] 24192 17.3	AA257941→ →BA716231
					98034000	L1230		Luc		2419204	[o] 24192 17.3	→AA257940
			TRW		82505400			Luc	epad	2419281	[o] 24192 17.3	AA257941→ →BA716231
					92162000	ø 360 x 30 x 62	⊖ Middle East ⊖ Africa	Luc	epad	2419282	[o] 24192 17.3	→AA257940
				PRO	92162003	ø 360 x 30 x 62	⊖ Middle East ⊖ Africa			98039400	L1183	
										92147700	ø 350 x 20 x 58.9	
									PRO	92147703	ø 350 x 20 x 58.9	
										91070900	ø 210 x 30	
351500													
3.6 TD 8 4x4	04/06→	200 / 272	Bre		2021701	[o] 20217 17.3	→AA000000	Luc		2419201	[o] 24192 17.3	AA257941→ →BA716231
			TRW		2502201	[o] 25022 18.6	AA000001→	Luc		2419204	[o] 24192 17.3	→AA257940
					98033900	L1209	→6A999999	Luc	epad	2419281	[o] 24192 17.3	AA257941→ →BA716231
					98034000	L1230		Luc	epad	2419282	[o] 24192 17.3	→AA257940
					98039900	L1209	7A000001→			98039400	L1183	

I - M

kW / hp											
RANGE ROVER SPORT (LS) 02/05→											
351500		TRW		**82505400**		AA000001→	Luc		**82073600**		→MY 2009
3.6 TD 8 4x4	04/06→ 200 / 272			**92162000**	ø 360 x 30 x 62	⊖ Middle East ⊖ Africa	Luc		**82505500**		MY 2010→
			PRO	**92162003**	ø 360 x 30 x 62	⊖ Middle East ⊖ Africa			**92147700**	ø 350 x 20 x 58.9	⊕ rim size 18" rim size 19"
								PRO	**92147703**	ø 350 x 20 x 58.9	⊕ rim size 18" rim size 19"
									91070900	ø 210 x 30	
351600		Bre		**2021701**	[o] 20217 17.3	⊕ rim size 18" rim size 19"	Luc		**2419201**	[o] 24192 17.3	
4.2 4x4	02/05→ 287 / 390			**98033900**	L1209	→6A999999	Luc	epad	**2419281**	[o] 24192 17.3	
				98039900	L1209	7A000001→			**98039400**	L1183	
				92162000	ø 360 x 30 x 62	⊕ rim size 18" rim size 19"	Luc		**82073600**		
			PRO	**92162003**	ø 360 x 30 x 62	⊕ rim size 18" rim size 19"			**92147700**	ø 350 x 20 x 58.9	⊕ rim size 18" rim size 19"
								PRO	**92147703**	ø 350 x 20 x 58.9	⊕ rim size 18" rim size 19"
									91070900	ø 210 x 30	
351700		Bre		**2021701**	[o] 20217 17.3	⊕ rim size 19"	Luc		**2419201**	[o] 24192 17.3	
4.4 4x4	02/05→ 220 / 299	Luc		**2419101**	[o] 24191 18.1	⊕ rim size 17" rim size 18"	Luc	epad	**2419281**	[o] 24192 17.3	
		Luc	epad	**2419181**	[o] 24191 18.1	⊕ rim size 17" rim size 18"			**98039400**	L1183	
				98033900	L1209	→6A999999	Luc		**82073600**		
				98034000	L1230	⊕ rim size 17" rim size 18"			**92147700**	ø 350 x 20 x 58.9	⊕ rim size 18" rim size 19"
				98039900	L1209	7A000001→		PRO	**92147703**	ø 350 x 20 x 58.9	⊕ rim size 18" rim size 19"
		Luc		**82073500**		⊕ rim size 17" rim size 18"			**91070900**	ø 210 x 30	
				92134600	ø 337 x 30 x 61.9	6A953689→ ⊕ rim size 17" rim size 18"					
				92162000	ø 360 x 30 x 62	⊕ rim size 18" rim size 19"					
			PRO	**92134603**	ø 337 x 30 x 61.9	6A953689→ ⊕ rim size 17" rim size 18"					
			PRO	**92162003**	ø 360 x 30 x 62	⊕ rim size 18" rim size 19"					
351800		Bre		**2465901**	[–] 24659 16.9		TRW		**2508501**	[o] 25085 17.1	
5.0 V8 4x4	04/09→ 372 / 506			**98048000**	L1213				**98039400**	L1183	
5.0 V8 4x4	09/09→ 375 / 510	Bre		**82539200**			Luc		**82073600**		
									91070900	ø 210 x 30	
351900		TRW		**2502201**	[o] 25022 18.6		Luc		**2419201**	[o] 24192 17.3	AA257941→ →BA716231
5.0 V8 4x4	07/09→ 276 / 375			**98034000**	L1230		Luc		**2419204**	[o] 24192 17.3	→AA257940
		TRW		**82505400**			Luc	epad	**2419281**	[o] 24192 17.3	AA257941→ →BA716231
				92162000	ø 360 x 30 x 62	⊖ Middle East ⊖ Africa	Luc	epad	**2419282**	[o] 24192 17.3	→AA257940
			PRO	**92162003**	ø 360 x 30 x 62	⊖ Middle East ⊖ Africa			**98039400**	L1183	
							Luc		**82073600**		
									92147700	ø 350 x 20 x 58.9	
								PRO	**92147703**	ø 350 x 20 x 58.9	
									91070900	ø 210 x 30	
RANGE ROVER SPORT (LW) 04/13→											
352000		TRW		**2502201**	[o] 25022 18.6		TRW		**2572001**	[o] 25720 17.3	
3.0 4x4	04/13→ 250 / 340	TRW		**82505400**					**98048300**	L951	
3.0 TD 4x4	04/13→ 155 / 211			**TPM0011**					**TPM0011**		
3.0 TD 4x4	04/13→ 183 / 249										
3.0 TD 4x4	04/13→ 190 / 258										
3.0 TD 4x4	04/13→ 215 / 292										

LAND ROVER

LAND ROVER

		kW / hp											
RANGE ROVER SPORT (LW) 04/13→													
		352100	Bre		2465901	[–] 24659 16.9		TRW		2572001	[o] 25720 17.3	
5.0 V8 4x4	04/13→	375 / 510			98048200	L1424				98048300	L951	
			Bre		82539200			Luc		82073600		
					TPM0011					TPM0011		

LDV

LDV

		kW / hp											
CONVOY Box 10/98→04/09													
		352200	Lkh		2035908	[–] 20359 18	41 mm piston Ø	Lkh		91015900	ø 228.6 x 45	
2.4 D	03/02→04/09	55 / 75	Lkh		2090401	[–] 20904 18	46 mm piston Ø	Lkh		91016100	ø 254 x 70	
2.4 D	03/02→04/09	66 / 90			92143500	ø 275 x 24 x 63	⊕ ABS	Lkh		91037600	ø 254 x 70	⊕ ABS
								Lkh		97004000		⊕ ABS
										97027300		
		352300	Lkh		2035908	[–] 20359 18	41 mm piston Ø	Lkh		91069800	ø 254 x 57	
2.5 DI	10/98→04/09	56 / 76										
2.5 TDI	10/98→04/09	74 / 101	Lkh		2090401	[–] 20904 18	46 mm piston Ø	Lkh		97004000		⊕ ABS
					92143500	ø 275 x 24 x 63	⊕ ABS			97027300		
CONVOY Bus 04/96→04/09													
		352400	Lkh		2035908	[–] 20359 18	41 mm piston Ø	Lkh		91015900	ø 228.6 x 45	
2.5 D	04/96→02/02	53 / 72										
2.5 D	04/96→02/02	71 / 97	Lkh		2090401	[–] 20904 18	46 mm piston Ø	Lkh		91016100	ø 254 x 70	
2.5 D	10/97→04/09	56 / 76										
2.5 D	10/97→04/09	74 / 101			92143500	ø 275 x 24 x 63	⊕ ABS	Lkh		91037600	ø 254 x 70	⊕ ABS
								Lkh		97004000		⊕ ABS
										97027300		
CONVOY Kasten 10/98→04/09 → CONVOY Box, Page 547													
CONVOY Platform/Chassis 10/98→04/09													
		352500	Lkh		2035908	[–] 20359 18	41 mm piston Ø	Lkh		91069800	ø 254 x 57	
2.5 DI	10/98→04/09	56 / 76										
2.5 TDI	10/98→04/09	74 / 101	Lkh		2090401	[–] 20904 18	46 mm piston Ø	Lkh		97004000		⊕ ABS
CONVOY Pritsche/Fahrgestell 10/98→04/09 → CONVOY Platform/Chassis, Page 547													
CUB 08/98→09/01													
		352600	Luc		2148101	[–] 21481 15.7				91055800	ø 254 x 57	
2.3 D	08/98→09/01	53 / 72	Sum		2337001	[–] 23370 15				97007200		
					92074800	ø 257 x 26 x 52.2				94022000	ø 254,0 x 67	
MAXUS Box 02/05→12/09													
		352700	Bos		2435801	[+] 24358 18.4				91058600	ø 280 x 65	
2.5 D	02/05→12/08	70 / 95										
2.5 D	10/05→12/09	88 / 120			92153400	ø 294 x 24 x 70.5	⊕ rim size 16"			84058600	bore ø 25.4	
2.5 D	02/06→12/09	99 / 135									ø 280 x 65	
					93191100	ø 278 x 24 x 72	⊕ rim size 15"					
MAXUS Bus 02/05→12/09													
		352800	Bos		2435801	[+] 24358 18.4				91058600	ø 280 x 65	
2.5 D	02/05→12/08	70 / 95										
2.5 D	02/05→12/09	88 / 120			92153400	ø 294 x 24 x 70.5	⊕ rim size 16"			84058600	bore ø 25.4	
2.5 D	02/06→12/09	99 / 135									ø 280 x 65	
					93191100	ø 278 x 24 x 72	⊕ rim size 15"					
MAXUS Kasten 02/05→12/09 → MAXUS Box, Page 547													
MAXUS Platform/Chassis 02/05→12/09													
		352900	Bos		2435801	[+] 24358 18.4				91058600	ø 280 x 65	
2.5 D	02/05→12/08	70 / 95										
2.5 D	10/05→12/09	88 / 120			92153400	ø 294 x 24 x 70.5	⊕ rim size 16"			84058600	bore ø 25.4	
2.5 D	02/06→12/09	99 / 135									ø 280 x 65	

LDV

LDV

kW / hp											
MAXUS Platform/Chassis 02/05→12/09											
352900											
2.5 D 02/05→12/08 70 / 95			**93191100**	ø 278 x 24 x 72	⊕ rim size 15"						
2.5 D 10/05→12/09 88 / 120											
2.5 D 02/06→12/09 99 / 135											
MAXUS Pritsche/Fahrgestell 02/05→12/09 → MAXUS Platform/Chassis, Page 547											
MAXUS Van 02/05→12/09 → MAXUS Box, Page 547											
PILOT Box 04/96→10/05											
353000	Lkh		**2035908**	[–] 20359 18	41 mm piston Ø	Lkh		**91015900**	ø 228.6 x 45		
1.9 D 04/96→02/02 52 / 71								**97027300**			
1.9 D 03/02→10/05 51 / 69											
PILOT Bus 04/96→10/05											
353100	Lkh		**2035908**	[–] 20359 18	41 mm piston Ø	Lkh		**91015900**	ø 228.6 x 45		
1.9 D 04/96→10/05 52 / 71											
1.9 D 06/01→10/05 51 / 69								**97027300**			
PILOT Kasten 04/96→10/05 → PILOT Box, Page 548											
PILOT Platform/Chassis 04/96→10/05											
353200	Lkh		**2035908**	[–] 20359 18	41 mm piston Ø	Lkh		**91015900**	ø 228.6 x 45		
1.9 D 04/96→02/02 52 / 71											
1.9 D 06/01→10/05 51 / 69								**97027300**			
PILOT Pritsche/Fahrgestell 04/96→10/05 → PILOT Platform/Chassis, Page 548											

LEXUS

LEXUS

kW / hp											
CT (ZWA1_) 12/10→											
353300	Ake		**2445101**	[–] 24451 15.6		Ake		**2501601**	[+] 25016 14.3		
200h 12/10→ 73 / 99		PRO	**92225003**	ø 255 x 25 x 49.3			PRO	**92224003**	ø 259 x 9 x 30.4		
							PRO	**92228303**	ø 279 x 30.3		
ES (AVV6_, GSV6_, ASV6_) 06/12→											
353400	Ake		**2435001**	[–] 24350 17.6		Ake		**2433801**	[–] 24338 15.4		
250 06/12→ 135 / 184											
300h 06/12→ 118 / 160											
353500	Adv		**2445201**	[–] 24452 17.5	⊕ GCC	Ake		**2433801**	[–] 24338 15.4		
350 06/12→ 204 / 277											
	Ake		**2435001**	[–] 24350 17.6	⊕ CHI						
ES (GSV4_, ACV4_) 05/06→06/12											
353600	Ake		**2435001**	[–] 24350 17.6		Ake		**2433801**	[–] 24338 15.4		
3.5 05/06→06/12 204 / 277							PRO	**92257803**	ø 281 x 10 x 66.8		
								91059400	ø 170 x 40		
ES (MCV_, VZV_) 10/96→06/08											
353700	Sum		**2179101**	[+] 21791 17	Sumitomo	Ake		**2359201**	[–] 23592 15	Akebono	
3.0 10/96→07/01 140 / 190											
	Ake		**2351302**	[+] 23513 17	Akebono	Ake		**2183301**	[+] 21833 15.5	Sumitomo	
	Ake		**82033400**		Akebono			**92079300**	ø 269 x 10 x 64.7		
		PRO	**92077703**	ø 275 x 28 x 49.2	⊕ rim size 15"			**91059400**	ø 170 x 40		
353800	Ake		**2385501**	[–] 23855 16		Ake		**2370201**	[–] 23702 15.8		
3.0 08/01→10/06 157 / 213											
3.0 10/01→06/08 158 / 215											
3.3 06/03→10/06 168 / 228	Ake		**82515100**		→06/04	Ake		**82515200**			
			92135800	ø 296 x 28 x 49.2				**92139800**	ø 269 x 12 x 64.8		
								91059400	ø 170 x 40		
ES Saloon (MCV_, VZV_) 10/96→06/08 → ES (MCV_, VZV_), Page 548											
ES Stufenheck (MCV_, VZV_) 10/96→06/08 → ES (MCV_, VZV_), Page 548											
GS (GRL1_, GWL1_) 01/12→											
353900	Adv		**2032501**	[+] 20325 17.5				**2552501**	[–] 25525 16.8		
250 01/12→ 154 / 209											
250 01/12→ 158 / 215											
300h 10/13→ 133 / 181	Adv		**2496501**	[+] 24965 17.5	18" -brake						
350 01/12→ 234 / 318											
350 AWD 01/12→ 234 / 318											

→

		kW / hp									
GS (GRL1_, GWL1_) 01/12→											
450h	01/12→	215 / 292	Adv		2032501	[+] 20325 17.5				2552501	[–] 25525 16.8
450h	01/12→	217 / 295	Adv		2496501	[+] 24965 17.5	18" -brake				
GS (GRS19_, UZS19_, GWS19_) 04/05→11/11											
		354000	Adv		2032501	[+] 20325 17.5				2432301	[+] 24323 15.5
3.0	04/05→11/11	170 / 231			92147800	ø 334 x 30 x 50.9	left			92148000	ø 310 x 18 x 67.3
300	04/05→11/11	183 / 249			92147900	ø 334 x 30 x 50.9	right			91074000	ø 190 x 27
350	05/08→11/11	232 / 316									
350 AWD	05/08→11/11	232 / 316									
4.3 VVTi	04/05→11/11	221 / 300									
430	04/05→11/11	208 / 283									
450h (GWS191)	02/06→11/11	218 / 296									
450h (GWS191)	02/06→11/11	254 / 345									
460	05/08→11/11	255 / 347									
		354100	Adv		2032501	[+] 20325 17.5				2432301	[+] 24323 15.5
350	04/08→11/11	226 / 307								92148000	ø 310 x 18 x 67.3
350 AWD	04/08→11/11	226 / 307								91074000	ø 190 x 27
GS (UZS161, JZS160) 08/97→03/05											
		354200	Sum		2149001	[+] 21490 17.1		Sum		2342901	[+] 23429 15
300	10/00→03/05	161 / 219	Sum		82509600				PRO	92170803	ø 307 x 12 x 63.5
300 T3	08/97→10/00	163 / 222		PRO	92237503	ø 296 x 32 x 51				91060500	ø 190 x 45
400	12/97→11/00	216 / 294								97034700	
		354300	Sum		2149001	[+] 21490 17.1		Sum		2342901	[+] 23429 15
430	11/00→03/05	208 / 283	Sum		82509600				PRO	92170803	ø 307 x 12 x 63.5
				PRO	92237503	ø 296 x 32 x 51	→11/02			91060500	ø 190 x 45
										97034700	
GS Saloon (GRS19_, UZS19_, GWS19_) 04/05→11/11 → GS (GRS19_, UZS19_, GWS19_), Page 549											
GS Saloon (UZS161, JZS160) 08/97→03/05 → GS (UZS161, JZS160), Page 549											
GS Stufenheck (GRS19_, UZS19_, GWS19_) 04/05→11/11 → GS (GRS19_, UZS19_, GWS19_), Page 549											
GS Stufenheck (UZS161, JZS160) 08/97→03/05 → GS (UZS161, JZS160), Page 549											
GX (_J12_) 11/01→11/09											
		354400	Sum		2402401	[+] 24024 17.8		Sum		2194701	[–] 21947 15
470	11/01→11/09	175 / 238	Sum		82050000			Sum		82050200	
470	11/01→11/09	199 / 271			92137300	ø 338 x 28 x 67.3			PRO	92170103	ø 312 x 18 x 68
										91066100	ø 215 x 45
GX (URJ15_) 11/09→											
		354500	Sum		2402403	[+] 24024 17		Sum		2194701	[–] 21947 15
460	11/09→	218 / 296	Sum		82050000			Sum		82050200	
460	01/10→	225 / 306		PRO	92223903	ø 338 x 32 x 68.4				91066100	ø 215 x 45
HS (ANF10) 07/09→											
		354600	Ake		2433601	[–] 24336 17.5		Ake		2433801	[–] 24338 15.4
250h	07/09→	110 / 150	Ake		82074400			Ake		82509900	
				PRO	92232703	ø 275 x 25 x 46.5				92162100	ø 281 x 12 x 55
									PRO	92162103	ø 281 x 12 x 55
										91068200	ø 172 x 32
IS I (JCE1_, GXE1_) 04/99→07/05											
		354700	Sum		2149001	[+] 21490 17.1		Sum		2342901	[+] 23429 15
200	04/99→07/05	114 / 155	Sum		82509600				PRO	92170803	ø 307 x 12 x 63.5
300	09/01→07/05	157 / 213			92109100	ø 296 x 32 x 50.8				91060500	ø 190 x 45

		kW / hp											
IS I (JCE1_, GXE1_) 04/99→07/05													
		354700											
200	04/99→07/05	114 / 155								97034700			
300	09/01→07/05	157 / 213											
IS I Saloon (JCE1_, GXE1_) 04/99→07/05 → IS I (JCE1_, GXE1_), Page 549													
IS I Stufenheck (JCE1_, GXE1_) 04/99→07/05 → IS I (JCE1_, GXE1_), Page 549													
IS II (GSE2_, ALE2_, USE2_) 10/05→													
		354800	Adv		2398301	[–] 23983 17.8				2432301	[+] 24323 15.5		
200d	07/10→	110 / 150		PRO	92174303	ø 296 x 28 x 49.5				PRO 92179803	ø 291 x 10 x 61		
250	11/10→	158 / 215								91074000	ø 190 x 27		
250 AWD	11/10→	158 / 215											
350	10/05→	228 / 310											
350	09/10→	234 / 318											
350 AWD	10/05→	228 / 310											
		354900	Adv		2398301	[–] 23983 17.8				2432301	[+] 24323 15.5		
220d (ALE20)	10/05→	130 / 177		PRO	92174303	ø 296 x 28 x 49.5				PRO 92179803	ø 291 x 10 x 61	→07/06	
250 (GSE20)	10/05→	153 / 208								92148000	ø 310 x 18 x 67.3	08/06→	
250 AWD	10/05→	153 / 208								91074000	ø 190 x 27		
		355000	Bre		2430701	[+] 24307 16.3			Bre	2440101	[+] 24401 17.5		
IS F (USE20)	11/07→	311 / 423		PRO	92199703	ø 360 x 30 x 60.7				PRO 92204203	ø 345 x 28 x 61.7		
IS II Saloon (GSE2_, ALE2_, USE2_) 10/05→ → IS II (GSE2_, ALE2_, USE2_), Page 550													
IS II Stufenheck (GSE2_, ALE2_, USE2_) 10/05→ → IS II (GSE2_, ALE2_, USE2_), Page 550													
IS III (GSE3_, AVE3_) 04/13→													
		355100	Adv		2398301	[–] 23983 17.8				2552501	[–] 25525 16.8		
250	04/13→	153 / 208		PRO	92174303	ø 296 x 28 x 49.5							
250 AWD	04/13→	152 / 204											
300h	04/13→	133 / 181											
		355200	Adv		2032501	[+] 20325 17.5				2552501	[–] 25525 16.8		
350	04/13→	228 / 310											
350 AWD	04/13→	228 / 310											
IS C (GSE2_) 04/09→													
		355300	Adv		2398301	[–] 23983 17.8				2432301	[+] 24323 15.5		
250	04/09→	153 / 208		PRO	92174303	ø 296 x 28 x 49.5				PRO 92179803	ø 291 x 10 x 61		
250	08/10→	157 / 214								91074000	ø 190 x 27		
		355400	Adv		2032501	[+] 20325 17.5				2432301	[+] 24323 15.5		
300	11/10→	170 / 231			92147800	ø 334 x 30 x 50.9	left			92148000	ø 310 x 18 x 67.3		
350	11/10→	234 / 318			92147900	ø 334 x 30 x 50.9	right			91074000	ø 190 x 27		
		355500	Adv		2032501	[+] 20325 17.5				2432301	[+] 24323 15.5		
350	04/09→	228 / 310								92148000	ø 310 x 18 x 67.3		
IS SportCross 10/01→10/05													
		355600	Sum		2149001	[+] 21490 17.1			Sum	2342901	[+] 23429 15	→09/05	
200	10/02→10/05	114 / 155	Sum		82509600					PRO 92170803	ø 307 x 12 x 63.5		
300	10/01→10/05	157 / 213			92109100	ø 296 x 32 x 50.8				91060500	ø 190 x 45		
										97034700			
LS (UCF20) 09/97→10/00													
		355700	Adv		2349901	[o] 23499 17			Sum	2178601	[o] 21786 15.5		
400	09/97→10/00	209 / 284		PRO	92173803	ø 315 x 28 x 53.5				92150400	ø 307 x 16 x 67		
400	10/97→07/00	216 / 294											
400	09/98→10/00	203 / 276											
LS (UCF30) 10/00→08/06													
		355800	Adv		2333102	[o] 23331 16			Ake	2380401	[o] 23804 15		
430	10/00→08/06	207 / 282											
LS (UVF4_, USF4_) 04/06→													
		355900	Adv		2424501	[o] 24245 18.5			Adv	2424401	[o] 24244 18.5		
460	04/06→	280 / 381											
460	12/08→	283 / 385	Adv		2424502	[o] 24245 18.5	⊖ USA ⊖ Asia ⊕ EU			PRO 92224403	ø 335 x 22 x 65.7	left	
460	10/09→	270 / 367											
460	09/12→	285 / 388		PRO	92224203	ø 357 x 34 x 60.3	left			PRO 92224503	ø 335 x 22 x 65.7	right	
460 AWD	12/08→	270 / 367											
460 AWD	10/09→	283 / 385											
460 AWD	09/12→	272 / 370											
600h	08/07→	290 / 394											

kW / hp												
LS (UVF4_, USF4_) 04/06→												
355900												
460	04/06→	280 / 381		PRO	92224303	ø 357 x 34 x 60.3	right					
460	12/08→	283 / 385										
460	10/09→	270 / 367										
460	09/12→	285 / 388										
460 AWD	12/08→	270 / 367										
460 AWD	10/09→	283 / 385										
460 AWD	09/12→	272 / 370										
600h	08/07→	290 / 394										
356000			Adv		2424501	[o] 24245 18.5	→09/09	Adv		2424401	[o] 24244 18.5	
460	05/08→	255 / 347	Adv		2424502	[o] 24245 18.5	⊖ USA ⊖ Asia ⊕ EU →09/09		PRO	92224403	ø 335 x 22 x 65.7	left
				PRO	92224203	ø 357 x 34 x 60.3	left		PRO	92224503	ø 335 x 22 x 65.7	right
				PRO	92224303	ø 357 x 34 x 60.3	right					
LS Saloon (UCF20) 09/97→10/00 → LS (UCF20), Page 550												
LS Saloon (UCF30) 10/00→08/06 → LS (UCF30), Page 550												
LS Saloon (UVF4_, USF4_) 04/06→ → LS (UVF4_, USF4_), Page 550												
LS Stufenheck (UCF20) 09/97→10/00 → LS (UCF20), Page 550												
LS Stufenheck (UCF30) 10/00→08/06 → LS (UCF30), Page 550												
LS Stufenheck (UVF4_, USF4_) 04/06→ → LS (UVF4_, USF4_), Page 550												
LX (URJ201) 11/07→												
356100			Sum		2402403	[+] 24024 17		Adv		2465301	[–] 24653 17.4	
460	01/12→	234 / 318										
570	11/07→	270 / 367		PRO	92204603	ø 340 x 32 x 84.5			PRO	92198503	ø 345 x 18 x 76.5	
570	11/07→	282 / 384										
LX (UZJ100) 05/98→03/08												
356200			Sum		2352402	[+] 23524 17.7		Sum		2353902	[–] 23539 17.5	
470	05/98→10/02	197 / 268	Sum		82511500			Sum		82510200		
470	05/98→03/08	170 / 231			92108100	ø 313 x 32 x 70			PRO	92172803	ø 329 x 18 x 102.5	
470	09/01→03/08	173 / 235		PRO	92108103	ø 313 x 32 x 70				91066200	ø 230 x 45	
470	08/02→03/08	202 / 275										
RX (GYL1_, GGL15, AGL10) 12/08→												
356300			Adv		2445201	[–] 24452 17.5				2491801	[–] 24918 15	
270	12/08→	138 / 188										
350	12/08→	206 / 280										
350	01/09→	202 / 275										
350 AWD	12/08→	204 / 277										
350 AWD	12/08→	206 / 280										
350h	04/12→	220 / 299										
350h AWD	04/12→	220 / 299										
450h	12/08→	183 / 249										
450h AWD	12/08→	183 / 249										
RX (MCU15) 07/00→05/03												
356400			Ake		2392901	[–] 23929 17	08/01→	Ake		2183301	[+] 21833 15.5	
300	07/00→03/03	148 / 201	Sum		2370301	[+] 23703 18.5	→07/01			92174900	ø 288 x 10 x 60	
300 AWD	07/00→05/03	164 / 223		PRO	92185403	ø 296 x 28 x 49.3			PRO	92174903	ø 288 x 10 x 60	
300 AWD	10/00→05/03	148 / 201								91059400	ø 170 x 40	
RX (MHU3_, GSU3_, MCU3_) 04/03→12/08												
356500			Ake		2373401	[–] 23734 17		Sum		2396701	[–] 23967 15.2	
3.3	04/03→01/06	171 / 232		PRO	92171503	ø 319 x 28 x 49.5			PRO	92171603	ø 288 x 10 x 69.3	
3.3 AWD	04/03→12/08	171 / 232								97034700		
300	05/03→12/08	150 / 204										
350	01/06→12/08	203 / 276										
350 AWD	02/06→12/08	203 / 276										
400h	09/05→12/08	155 / 211										
400h AWD	09/04→12/08	155 / 211										
SC (UZZ40_) 05/01→07/10												
356600			Sum		2149001	[+] 21490 17.1		Sum		2342901	[+] 23429 15	
430	05/01→07/10	210 / 286	Sum		82509600				PRO	92170803	ø 307 x 12 x 63.5	
				PRO	92237503	ø 296 x 32 x 51	→11/02			91060500	ø 190 x 45	
										97034700		
356700			Sum		2149001	[+] 21490 17.1		Sum		2342901	[+] 23429 15	
430	05/01→07/10	215 / 292	Sum		82509600				PRO	92170803	ø 307 x 12 x 63.5	
430	05/01→07/10	244 / 332										

LEXUS

LEXUS

		kW / hp											
SC (UZZ40_) 05/01→07/10													
		356700											
430	05/01→07/10	215 / 292								**91060500**	ø 190 x 45		
430	05/01→07/10	244 / 332								**97034700**			
SC Coupe (UZZ3_, JZZ3_) 08/91→06/00													
		356800	Sum		**2179101**	[+] 21791 17		Sum		**2149101**	[+] 21491 15.5		
300	08/91→06/00	168 / 228	Ake		**2489201**	[+] 24892 18				**92150400**	ø 307 x 16 x 67		
400	08/91→06/00	194 / 264	Sum		**82509600**					**91060500**	ø 190 x 45		
					92109100	ø 296 x 32 x 50.8				**97034700**			
SOARER (UZZ40_) 05/01→07/10 → SC (UZZ40_), Page 551													

LIGIER

LIGIER

		kW / hp											
AMBRA 12/96→12/06													
		356900	Ate		**2473001**	[+] 24730 10.2							
0.5	12/96→12/06	14 / 19											
BE UP 08/02→12/06													
		357000	Ate		**2473001**	[+] 24730 10.2							
0.5	08/02→12/06	14 / 19											
NOVA 08/02→													
		357100	Ate		**2473001**	[+] 24730 10.2							
400	08/02→	5 / 7											
500	08/02→	4 / 5											
650	08/02→	14 / 19											

LINCOLN

LINCOLN

		kW / hp											
AVIATOR 04/02→													
		357200						Kel		**2476001**	[–] 24760 14.2		
4.6	04/02→	222 / 302											
4.6 All-wheel Drive	04/02→	222 / 302											
BLACKWOOD 05/00→08/05													
		357300	Wag		**2475701**	[+] 24757 16.3		Kel		**2475301**	[–] 24753 16.5		
5.4	05/00→08/05	224 / 305											
CONTINENTAL 01/98→													
		357400	Luc		**2477201**	[–] 24772 17.4							
4.6	01/98→12/02	194 / 264											
4.6	06/98→	202 / 275											
CONTINENTAL TOWN CAR 01/94→													
		357500	Luc		**2477201**	[–] 24772 17.4							
4.6	01/94→	209 / 284											
4.6 Signature	01/94→10/99	157 / 213											
LS 05/98→12/06													
		357600						Luc		**2342401**	[–] 23424 17.8	→2002-11	
3.0	09/99→12/03	188 / 156											
3.9	09/99→12/06	188 / 256											
		357700	Luc		**2342301**	[–] 23423 17.8		Luc		**2342401**	[–] 23424 17.8		
3.0	09/00→08/03	163 / 222											
3.0	09/03→08/06	173 / 235	Luc		**82063500**			Luc		**82063500**			
3.0 V6 24V	05/98→	140 / 190											
3.9 V8 32V	05/98→	180 / 245											
4.0	09/02→08/06	209 / 284		PRO	**92099003**	ø 300 x 30 x 43				**92099100**	ø 288 x 20 x 32.5		
4.0 V8 32V	05/98→	180 / 245											
MKX 09/06→													
		357800	Sum		**2454401**	[+] 24544 17.5		Sum		**2454401**	[+] 24544 17.5	→2010-07-12	
3.5	09/06→12/10	198 / 269											
3.5 AWD	12/06→	198 / 269											
		357900	Sum		**2454401**	[+] 24544 17.5				**2454501**	[–] 24545 17.9		
3.7	09/10→	227 / 309											
3.7 AWD	09/10→	227 / 309											
MKZ 04/06→													
		358000	Ake		**2458201**	[–] 24582 18.4	→2008-06						
2.5 Hybrid	09/10→12/12	116 / 158											
3.5	09/06→12/12	196 / 266											
3.5	09/06→12/12	196 / 267											
3.5 4WD	04/06→	196 / 267											
NAVIGATOR 05/97→12/02													
		358100			**2475501**	[–] 24755 15.8		Kel		**2475301**	[–] 24753 16.5		
5.4	05/97→12/02	224 / 305											
5.4 All-wheel Drive	05/97→12/02	224 / 305											

LINCOLN

LINCOLN

		kW / hp											
ZEPHYR/MKZ 09/04→													
		358200	Ake		**2458202**	[+] 24582 18.4		Ake		**2458101**	[–] 24581 15	
3.0 Limirted	09/04→	164 / 223										
3.5	01/12→	196 / 267										

LOTUS

LOTUS

		kW / hp											
2 ELEVEN 04/07→07/11													
		358300	Ate		**2032306**	[–] 20323 14.5		Bre		**2041003**	[–] 20410 12.9	
1.8	04/07→07/11	142 / 193		PRO	**92075603**	ø 288 x 25 x 42			PRO	**92075603**	ø 288 x 25 x 42	
ELISE 08/95→11/00													
		358400	Ate		**2032306**	[–] 20323 14.5		Bre		**2041003**	[–] 20410 12.9	
1.8 16V	08/95→11/00	88 / 120										
111 S	03/99→11/00	107 / 146		PRO	**92060903**	ø 262 x 21 x 44.6				**92060800**	ø 239 x 10 x 48.1	
ELISE 11/00→													
		358500	Ate		**2032306**	[–] 20323 14.5		Bre		**2041003**	[–] 20410 12.9	
1.6	06/07→	100 / 136		PRO	**92075603**	ø 288 x 25 x 42			PRO	**92075603**	ø 288 x 25 x 42	
1.8	11/00→08/05	90 / 122										
1.8	05/02→	118 / 160										
1.8	11/02→	140 / 190										
1.8	10/03→	99 / 135										
1.8	01/04→	141 / 192										
1.8	01/04→	164 / 223										
1.8	06/07→	162 / 220										
ELISE 340 R 03/00→02/01													
		358600	Ate		**2032306**	[–] 20323 14.5	09/00→	Bre		**2041003**	[–] 20410 12.9	09/00→
1.8	03/00→02/01	132 / 180										
ESPRIT S4 (082) 02/96→06/03													
		358700						Bre		**2041001**	[–] 20410 15	
2.0 GT3	09/96→06/00	179 / 243										
3.5 V8 32V Turbo	02/96→06/03	260 / 354										
EUROPA S 07/06→													
		358800	Ate		**2032306**	[–] 20323 14.5		Bre		**2041003**	[–] 20410 12.9	
2.0 Turbo	07/06→	147 / 200										
2.0 Turbo	09/08→	165 / 224		PRO	**92075603**	ø 288 x 25 x 42			PRO	**92075603**	ø 288 x 25 x 42	
EVORA 05/09→													
		358900	Lkh		**2034503**	[–] 20345 15.7		Lkh		**2559401**	[–] 25594 15.9	
3.5	05/09→	206 / 280										
3.5 S	12/10→	257 / 350										
EXIGE (SCC_) 09/01→06/12													
		359000	Ate		**2032306**	[–] 20323 14.5		Bre		**2041003**	[–] 20410 12.9	
1.8 16V	09/01→07/08	132 / 180										
1.8 16V	09/01→07/08	141 / 192										
1.8 16V	04/06→06/12	163 / 222		PRO	**92075603**	ø 288 x 25 x 42			PRO	**92075603**	ø 288 x 25 x 42	
1.8 265 E	08/06→06/12	197 / 268										
1.8 Cup 240	04/06→06/12	181 / 246										
1.8 Cup 260	04/06→06/12	191 / 260										

LTI

LTI

		kW / hp											
TX 01/97→													
		359100		PRO	**92171103**	ø 278 x 24 x 41				**94032000**	ø 254 x 82.2	
2.4 TDi	10/02→	66 / 90										
		359200	Lkh		**2116002**	[+] 21160 18	→09/02 Lockheed	Lkh		**97004000**		→09/02 Lucas
2.7 TD	01/97→	60 / 82		PRO	**92171103**	ø 278 x 24 x 41				**94032000**	ø 254 x 82.2	

MARCOS

MARCOS

		kW / hp											
TSO Convertible 05/04→													
		359300						Luc		**2098101**	[–] 20981 13.7	
5.7 V8	05/04→	260 / 354										
5.7 V8	01/05→	298 / 405										
TSO GT2 07/05→													
		359400						Luc		**2098101**	[–] 20981 13.7	
5.7 V8	07/05→	354 / 481										

MARUTI

MARUTI

800 01/91→12/06

		kW / hp											
0.8	01/91→12/06	359500 26 / 35	Sum		2073101	[–] 20731 15.2							

MARUTI SUZUKI

MARUTI SUZUKI

A-STAR 10/08→

		kW / hp											
1.0	10/08→	359600 49 / 67	Sum		2350801	[+] 23508 17				91075200	ø 180 x 26		
			Bos		82514000								
					92204100	ø 231 x 20 x 51.4							

MASERATI

MASERATI

GHIBLI II 05/92→

		kW / hp											
2.0 24V Biturbo	05/92→	359700 225 / 306							Ate	2128201	[o] 21282 17.3		
2.8 24V Biturbo	06/92→	209 / 284											

GHIBLI Mk II 05/92→ → GHIBLI II, Page 554

QUATTROPORTE IV 03/94→

		kW / hp											
2.0 Biturbo	03/94→	359800 211 / 287							Ate	2128201	[o] 21282 17.3		
2.8 Biturbo	03/94→	209 / 284											
3.2 V8 32V	12/95→	247 / 336											

QUATTROPORTE IV Saloon 03/94→ → QUATTROPORTE IV, Page 554

QUATTROPORTE IV Stufenheck 03/94→ → QUATTROPORTE IV, Page 554

QUATTROPORTE V 03/04→

		kW / hp											
4.2	03/04→	359900 295 / 400							Ate	2315702	[o] 23157 16		
									Ate	2315781	[o] 23157 16		
									Bre	2061005	[–] 20610		
4.7 GT S	06/08→	360000 323 / 439							Bre	2061005	[–] 20610		
4.7 S	06/08→	317 / 431											

QUATTROPORTE V Saloon 03/04→ → QUATTROPORTE V, Page 554

QUATTROPORTE V Stufenheck 03/04→ → QUATTROPORTE V, Page 554

QUATTROPORTE Mk II 03/94→ → QUATTROPORTE IV, Page 554

MAXUS (SAIC MOTOR)

MAXUS (SAIC MOTOR)

V80 Box 10/10→

		kW / hp											
2.5 D	10/10→	360100 70 / 95	Bos		2435801	[+] 24358 18.4				91058600	ø 280 x 65		
2.5 D	10/10→	88 / 120											
2.5 D	10/10→	100 / 136			92153400	ø 294 x 24 x 70.5	⊕ rim size 16"			84058600	bore ø 25.4 ø 280 x 65		
					93191100	ø 278 x 24 x 72	⊕ rim size 15"						

V80 Bus 10/10→

		kW / hp											
2.5 D	10/10→	360200 70 / 95	Bos		2435801	[+] 24358 18.4				91058600	ø 280 x 65		
2.5 D	10/10→	88 / 120											
2.5 D	10/10→	100 / 136			92153400	ø 294 x 24 x 70.5	⊕ rim size 16"			84058600	bore ø 25.4 ø 280 x 65		
					93191100	ø 278 x 24 x 72	⊕ rim size 15"						

V80 Kasten 10/10→ → V80 Box, Page 554

MAYBACH

MAYBACH

57 / 62 (240_) 09/02→12/12 → MAYBACH (240_), Page 554

MAYBACH (240_) 09/02→12/12

		kW / hp											
5.5 V12	09/02→12/12	360300 405 / 551	Ate		2371501	[o] 23715 18.6	2x		Bre	82504800			
5.5 V12 57/62 (240.078, 240.178)	09/02→12/12	405 / 551											

→

MAYBACH (240_) 09/02→12/12

6.0 Biturbo	06/09→12/12	471 / 641			98024700	L95				TPM0002		
6.0 V12 57S (240.079)	09/05→12/12	450 / 612			98024701	L95				91058800	ø 180 x 25	
			Bre		82504800							
					TPM0002							

MAYBACH Saloon (240_) 09/02→12/12 → MAYBACH (240_), Page 554

MAYBACH Stufenheck (240_) 09/02→12/12 → MAYBACH (240_), Page 554

2 (DE) 10/07→

		360400	Luc		2428303	[+] 24283 16.5				91072100	ø 200 x 32	
1.3	10/07→	55 / 75										
1.3	10/07→	63 / 86	Luc		82512900					97038600		
1.3 MZR	01/10→	62 / 84										
1.4 MZR-CD	01/08→	50 / 68										
1.5	10/07→	76 / 103			92166800	ø 258 x 23 x 44				94038400	ø 200 x 40.4	
1.5 MZR	06/11→	75 / 102										
1.6 MZ-CD	10/08→	66 / 90										
1.6 MZ-CD	06/11→	70 / 95										

2 (DY) 02/03→

		360500	Ate		2360406	[–] 23604 18.8			Lkh	91057300	ø 203.2 x 38	
1.2	02/03→	55 / 75										
1.25	04/03→	55 / 75	Ate		82029200				Lkh	97015500		
1.3 L	04/03→	67 / 91										
1.4	02/03→	59 / 80										
1.4	04/03→	59 / 80	Ate		82062900					94026700	ø 203,0 x 44.5	
1.4 CD	04/03→	50 / 68										
1.5	04/03→	82 / 111										
1.6	02/03→	74 / 101		PRO	92096203	ø 258 x 22 x 43.5						
1.6	04/03→	74 / 100										

2 Saloon (DE) 05/10→

		360600	Luc		2428303	[+] 24283 16.5				91072100	ø 200 x 32	
1.5 i	05/10→	76 / 103										
			Luc		82512900					97038600		
					92166800	ø 258 x 23 x 44				94038400	ø 200 x 40.4	

2 Stufenheck (DE) 05/10→ → 2 Saloon (DE), Page 555

3 (BK) 10/03→12/09

		360700	Ate		2372301	[–] 23723 18.2			Ate	2413701	[–] 24137 16.7	
1.4	10/03→06/09	62 / 84										
1.4	02/04→06/09	59 / 80	Ate	epad	2372381	[–] 23723 18.2			Ate	2413781	[–] 24137 16.7	
1.6	10/03→06/09	77 / 105										
1.6 DI Turbo	06/04→06/09	80 / 109	Ate		82032000				Ate	82062900		
			Ate		82062900				Ate	82503500		
				PRO	92130303	ø 277.9 x 25 x 48.5				92130500	ø 265 x 11 x 40.8	
		360800	Ate		2372301	[–] 23723 18.2	→04/06		Ate	2413701	[–] 24137 16.7	
2.0	10/03→06/09	110 / 150										
2.0	04/04→06/06	104 / 141	Ate	epad	2372381	[–] 23723 18.2	→04/06		Ate	2413781	[–] 24137 16.7	
2.3	01/04→12/09	118 / 160										
2.3 MZR	03/04→03/09	115 / 156	Ate		2391201	[–] 23912 18.5	04/06→		Ate	82062900		
2.3 MZR Sport	10/03→06/09	126 / 171	Ate		82032000				Ate	82503500		
			Ate		82062900					92130600	ø 280 x 11 x 40.9	
					92130400	ø 300 x 25 x 48.5						
		360900	Ate		2391201	[–] 23912 18.5			Ate	2413701	[–] 24137 16.7	
2.0 MZR-CD	12/06→06/09	105 / 143										
2.3 DiSi Turbo MPS	06/06→06/09	184 / 250	Ate		82032000				Ate	2413781	[–] 24137 16.7	
			Ate		82062900				Ate	82062900		
					92130400	ø 300 x 25 x 48.5			Ate	82503500		
										92130600	ø 280 x 11 x 40.9	
		361000	Ate		2391201	[–] 23912 18.5			Ate	2413701	[–] 24137 16.7	
2.3 MPS	12/06→06/09	191 / 260										
			Ate		82032000				Ate	2413781	[–] 24137 16.7	

30 kW / hp

3 (BK) 10/03→12/09

361000											
2.3 MPS	12/06→06/09	191 / 260	Ate		82062900			Ate		82062900	
				PRO	92223503	ø 320 x 25 x 48.4		Ate		82503500	
										92130600	ø 280 x 11 x 40.9

3 (BL) 06/09→

361100			Ate		2372301	[–] 23723 18.2		Ate		2413701	[–] 24137 16.7
1.6 MZR	06/09→	77 / 105									
1.6 MZR CD	06/09→	80 / 109									
1.6 MZR CD	11/10→	85 / 116	Ate	epad	2372381	[–] 23723 18.2		Ate	epad	2413781	[–] 24137 16.7
			Ate		82032000			Ate		82062900	
			Ate		82062900			Ate		82503500	
				PRO	92130303	ø 277.9 x 25 x 48.5				92130500	ø 265 x 11 x 40.8
361200			Ate		2372301	[–] 23723 18.2		Ate		2413701	[–] 24137 16.7
2.0 MZR	06/09→	110 / 150									
2.0 MZR DISI	06/09→	111 / 151	Ate	epad	2372381	[–] 23723 18.2		Ate	epad	2413781	[–] 24137 16.7
			Ate		82032000			Ate		82062900	
			Ate		82062900			Ate		82503500	
					92130400	ø 300 x 25 x 48.5				92130500	ø 265 x 11 x 40.8
361300			Ate		2372301	[–] 23723 18.2		Ate		2413701	[–] 24137 16.7
2.2 MZR CD	06/09→	110 / 150									
2.2 MZR CD	06/09→	136 / 185									
2.5	06/09→	122 / 166	Ate	epad	2372381	[–] 23723 18.2		Ate	epad	2413781	[–] 24137 16.7
			Ate		82032000			Ate		82062900	
			Ate		82062900			Ate		82503500	
					92130400	ø 300 x 25 x 48.5				92130600	ø 280 x 11 x 40.9
361400			Ate		2391201	[–] 23912 18.5		Ate		2413701	[–] 24137 16.7
2.3 MPS Turbo	06/09→	191 / 260	Ate		82062900			Ate	epad	2413781	[–] 24137 16.7
				PRO	92223503	ø 320 x 25 x 48.4		Ate		82062900	
								Ate		82503500	
										92130600	ø 280 x 11 x 40.9

3 Saloon (BK) 06/00→03/03

361500			Ate		2372301	[–] 23723 18.2		Ate		2413701	[–] 24137 16.7
1.6	02/04→	77 / 105									
1.6 DI Turbo	06/04→	80 / 109	Ate	epad	2372381	[–] 23723 18.2		Ate	epad	2413781	[–] 24137 16.7
			Ate		82032000			Ate		82062900	
			Ate		82062900			Ate		82503500	
				PRO	92130303	ø 277.9 x 25 x 48.5				92130500	ø 265 x 11 x 40.8
361600			Ate		2372301	[–] 23723 18.2	→04/06	Ate		2413701	[–] 24137 16.7
2.0	02/04→	110 / 150									
2.0	04/04→06/06	104 / 141									
2.3	03/04→03/09	118 / 160	Ate	epad	2372381	[–] 23723 18.2	→04/06	Ate	epad	2413781	[–] 24137 16.7
			Ate		2391201	[–] 23912 18.5	04/06→	Ate		82062900	
			Ate		82032000			Ate		82503500	
			Ate		82062900					92130600	ø 280 x 11 x 40.9
					92130400	ø 300 x 25 x 48.5					
361700			Ate		2391201	[–] 23912 18.5		Ate		2413701	[–] 24137 16.7
2.0 MZR-CD	12/06→	105 / 143	Ate		82032000			Ate	epad	2413781	[–] 24137 16.7
			Ate		82062900			Ate		82062900	
					92130400	ø 300 x 25 x 48.5		Ate		82503500	

		kW / hp											
3 Saloon (BK) 06/00→03/03													
		361700											
2.0 MZR-CD	12/06→	105 / 143								92130600	ø 280 x 11 x 40.9		
		361800	Ate		2372301	[–] 23723 18.2			Ate	2413701	[–] 24137 16.7		
2.3	06/00→03/03	126 / 171	Ate	epad	2372381	[–] 23723 18.2			Ate	2413781	[–] 24137 16.7		
			Ate		82032000				Ate	82062900			
			Ate		82062900				Ate	82503500			
					92130400	ø 300 x 25 x 48.5				92130600	ø 280 x 11 x 40.9		
3 Saloon (BL) 06/09→													
		361900	Ate		2372301	[–] 23723 18.2			Ate	2413701	[–] 24137 16.7		
1.6 MZR	06/09→	77 / 105											
1.6 MZR CD	06/09→	80 / 109											
1.6 MZR CD	11/10→	85 / 116	Ate	epad	2372381	[–] 23723 18.2			Ate	2413781	[–] 24137 16.7		
			Ate		82032000				Ate	82062900			
			Ate		82062900				Ate	82503500			
				PRO	92130303	ø 277.9 x 25 x 48.5				92130500	ø 265 x 11 x 40.8		
		362000	Ate		2372301	[–] 23723 18.2			Ate	2413701	[–] 24137 16.7		
2.0 MZR	06/09→	110 / 150											
2.0 MZR DISI	06/09→	111 / 151	Ate	epad	2372381	[–] 23723 18.2			Ate	2413781	[–] 24137 16.7		
			Ate		82032000				Ate	82062900			
			Ate		82062900				Ate	82503500			
					92130400	ø 300 x 25 x 48.5				92130500	ø 265 x 11 x 40.8		
		362100	Ate		2372301	[–] 23723 18.2			Ate	2413701	[–] 24137 16.7		
2.2 MZR CD	06/09→	110 / 150											
2.2 MZR CD	06/09→	136 / 185											
2.5	06/09→	122 / 166	Ate	epad	2372381	[–] 23723 18.2			Ate	2413781	[–] 24137 16.7		
			Ate		82032000				Ate	82062900			
			Ate		82062900				Ate	82503500			
					92130400	ø 300 x 25 x 48.5				92130600	ø 280 x 11 x 40.9		
3 Stufenheck (BK) 06/00→03/03 → 3 Saloon (BK), Page 556													
3 Stufenheck (BL) 06/09→ → 3 Saloon (BL), Page 557													
5 (CR19) 02/05→													
		362200	Ate		2372301	[–] 23723 18.2			Ate	2413701	[–] 24137 16.7		
1.8	03/05→	85 / 116											
2.0	03/05→	107 / 146											
2.0 CD	03/05→	81 / 110	Ate	epad	2372381	[–] 23723 18.2			Ate	2413781	[–] 24137 16.7		
2.0 CD	06/05→	105 / 143											
2.3	02/05→	115 / 156	Ate		82032000				Ate	82062900			
2.3	02/05→	122 / 166	Ate		82062900				Ate	82503500			
					92130400	ø 300 x 25 x 48.5	⊕ rim size 16"			92130600	ø 280 x 11 x 40.9	⊕ rim size 15"	
				PRO	92130303	ø 277.9 x 25 x 48.5	⊕ rim size 15"			92148200	ø 302 x 11 x 40.8	⊕ rim size 16"	
										PRO 92148203	ø 302 x 11 x 40.8	⊕ rim size 16"	
5 (CW) 09/10→													
		362300	Ate		2372301	[–] 23723 18.2			Ate	2413701	[–] 24137 16.7		
1.6 CD	09/10→	85 / 116											
2.0	09/10→	110 / 150											
2.0	01/11→	106 / 144	Ate	epad	2372381	[–] 23723 18.2			Ate	2413781	[–] 24137 16.7		
2.5	01/12→	117 / 159	Ate		82032000				Ate	82062900			
			Ate		82062900				Ate	82503500			
					92130400	ø 300 x 25 x 48.5	⊕ rim size 16"			92130600	ø 280 x 11 x 40.9	⊕ rim size 15"	
				PRO	92130303	ø 277.9 x 25 x 48.5	⊕ rim size 15"			92148200	ø 302 x 11 x 40.8	⊕ rim size 16"	
										PRO 92148203	ø 302 x 11 x 40.8	⊕ rim size 16"	
6 (GG) 06/02→08/07													
		362400	Sum		2424601	[+] 24246 17			Ake	2404501	[–] 24045 13		
1.8	08/02→08/07	88 / 120											

		kW / hp											
6 (GG) 06/02→08/07													
		362400	Sum		**82507100**			Ake		**82051500**			
1.8	08/02→08/07	88 / 120			**92110400**	ø 273.5 x 24 x 47.5				**92125603**	ø 280 x 10 x 40.2		
		362500	Ake		**2404601**	[+] 24046 18.2		Ake		**2404501**	[–] 24045 13		
2.0	06/02→08/07	104 / 141											
2.0	03/05→08/07	108 / 147											
2.0 DI	06/02→08/07	100 / 136	Ake		**82500100**			Ake		**82051500**			
2.0 DI	08/02→08/07	89 / 121											
2.0 DI	06/05→08/07	105 / 143			**92125503**	ø 282.5 x 25 x 48.5				**92125603**	ø 280 x 10 x 40.2		
2.3	07/03→02/05	118 / 160											
		362600	Ake		**2404601**	[+] 24046 18.2		Ake		**2404501**	[–] 24045 13		
2.3	06/02→08/07	122 / 166	Ake		**82500100**			Ake		**82051500**			
					92166300	ø 320 x 25 x 45.9				**92166400**	ø 313.5 x 11 x 40.9		
					92125503	ø 282.5 x 25 x 48.5				**92125603**	ø 280 x 10 x 40.2		
		362700	Ate		**2400201**	[+] 24002 18.8	⊕ rim size 18"	Ake		**2404501**	[–] 24045 13		
2.3	03/05→07/07	120 / 163	Ake		**2404601**	[+] 24046 18.2		Ake		**82051500**			
			Ake		**82500100**					**92125603**	ø 280 x 10 x 40.2		
			Ate		**82032000**		⊕ rim size 18"						
			Ate		**82062900**		⊕ rim size 18"						
					92125503	ø 282.5 x 25 x 48.5							
		362800	Ate		**2400201**	[+] 24002 18.8		Ake		**2458102**	[–] 24581 14.3		
2.3 MPS Turbo	12/05→08/07	191 / 260	Ate		**82032000**					**92166400**	ø 313.5 x 11 x 40.9		
			Ate		**82062900**								
					92166300	ø 320 x 25 x 45.9							
		362900	Ake		**2458202**	[+] 24582 18.4		Ake		**2404501**	[–] 24045 13		
2.5	08/07→	125 / 170	Ake		**82516400**			Ake		**82051500**			
					TPM0006					**92181403**	ø 280 x 10 x 40		
6 (GH) 08/07→													
		363000	Ake		**2458202**	[+] 24582 18.4		Ake		**2404501**	[–] 24045 13		
1.8 MZR	08/07→	88 / 120											
2.0 MZR	08/07→	108 / 147	Ake		**82516400**			Ake		**82051500**			
2.0 MZR	01/10→	114 / 155											
2.0 MZR-CD	08/07→	103 / 140											
2.2 D	01/10→	95 / 129			**92180703**	ø 299 x 25 x 49				**92181403**	ø 280 x 10 x 40		
2.2 D	01/10→	132 / 180											
2.2 MZR-CD	01/09→	92 / 125											
2.2 MZR-CD	01/09→	120 / 163			**TPM0006**								
2.2 MZR-CD	01/09→	136 / 185											
2.5 MZR	08/07→	125 / 170											
6 combi-coupe (GH) 02/08→ → 6 Estate (GH), Page 558													
6 Estate (GH) 02/08→													
		363100	Ake		**2458202**	[+] 24582 18.4		Ake		**2404501**	[–] 24045 13		
1.8 MZR	02/08→	88 / 120											
2.0 MZR	02/08→	108 / 147	Ake		**82516400**			Ake		**82051500**			
2.0 MZR	01/10→	114 / 155											
2.0 MZR-CD	02/08→	103 / 140											
2.2 D	01/10→	95 / 129			**92180703**	ø 299 x 25 x 49				**92181403**	ø 280 x 10 x 40		
2.2 MRZ-CD	01/10→	132 / 180											
2.2 MZR-CD	01/09→	92 / 125											
2.2 MZR-CD	01/09→	120 / 163			**TPM0006**								
2.2 MZR-CD	01/09→	136 / 185											
2.5 MZR	02/08→	125 / 170											
6 Estate (GJ, GH) 12/12→													
		363200			**2572501**	[–] 25725 15.5		Ake		**2568801**	[+] 25688 14.3		
2.0	12/12→	114 / 155											
2.0	01/13→	107 / 146	Ake		**82074400**					**92254703**	ø 278 x 10 x 39.5		
2.0	01/13→	121 / 165											
2.2 D	12/12→	110 / 150											
2.2 D	12/12→	129 / 175			**92257403**	ø 297 x 28 x 51.5							
2.5	12/12→	138 / 188											
2.5	12/12→	141 / 192											
6 Hatchback (GG) 08/02→08/07													
		363300	Sum		**2424601**	[+] 24246 17		Ake		**2404501**	[–] 24045 13		
1.8	08/02→08/07	88 / 120	Sum		**82507100**			Ake		**82051500**			

		kW / hp											
6 Hatchback (GG) 08/02→08/07													
		363300			92110400	ø 273.5 x 24 x 47.5			PRO	92125603	ø 280 x 10 x 40.2	
1.8	08/02→08/07	88 / 120											
		363400	Ake		2404601	[+] 24046 18.2		Ake		2404501	[–] 24045 13	
2.0	08/02→08/07	104 / 141											
2.0	03/05→08/07	108 / 147											
2.0 DI	08/02→08/07	89 / 121	Ake		82500100			Ake		82051500		
2.0 DI	08/02→08/07	100 / 136											
2.0 DI	06/05→08/07	105 / 143		PRO	92125503	ø 282.5 x 25 x 48.5			PRO	92125603	ø 280 x 10 x 40.2	
		363500	Ate		2400201	[+] 24002 18.8	⊕ rim size 18"	Ake		2404501	[–] 24045 13	
2.3	08/02→08/07	122 / 166											
			Ake		2404601	[+] 24046 18.2		Ake		82051500		
			Ake		82500100					92166400	ø 313.5 x 11 x 40.9	
			Ate		82032000		⊕ rim size 18"		PRO	92125603	ø 280 x 10 x 40.2	
			Ate		82062900		⊕ rim size 18"					
					92166300	ø 320 x 25 x 45.9						
				PRO	92125503	ø 282.5 x 25 x 48.5						
		363600	Ake		2458202	[+] 24582 18.4		Ake		2404501	[–] 24045 13	
2.5	08/07→	125 / 170											
			Ake		82516400			Ake		82051500		
					TPM0006				PRO	92181403	ø 280 x 10 x 40	
6 Hatchback (GH) 08/07→													
		363700	Ake		2458202	[+] 24582 18.4		Ake		2404501	[–] 24045 13	
1.8 MZR	08/07→	88 / 120											
2.0 MZR	08/07→	108 / 147											
2.0 MZR	01/10→	114 / 155	Ake		82516400			Ake		82051500		
2.0 MZR-CD	08/07→	103 / 140											
2.2 D	01/10→	95 / 129		PRO	92180703	ø 299 x 25 x 49			PRO	92181403	ø 280 x 10 x 40	
2.2 MZR-CD	01/09→	92 / 125											
2.2 MZR-CD	01/09→	120 / 163											
2.2 MZR-CD	01/09→	136 / 185			TPM0006							
2.2 MZR-CD	01/10→	132 / 180											
2.5 MZR	08/07→	125 / 170											
6 Kombi (GH) 02/08→ → 6 Estate (GH), Page 558													
6 Kombi (GJ, GH) 12/12→ → 6 Estate (GJ, GH), Page 558													
6 Saloon (GG) 06/02→08/07 → 6 (GG), Page 557													
6 Saloon (GH) 08/07→ → 6 (GH), Page 558													
6 Saloon (GJ, GH) 12/12→													
		363800			2572501	[–] 25725 15.5		Ake		2568801	[+] 25688 14.3	
2.0	12/12→	114 / 155											
2.2 D	12/12→	129 / 175	Ake		82074400				PRO	92254703	ø 278 x 10 x 39.5	
2.5	12/12→	138 / 188											
				PRO	92257403	ø 297 x 28 x 51.5						
6 Schrägheck (GH) 08/07→ → 6 Hatchback (GH), Page 559													
6 Sport (GH) 08/07→ → 6 Hatchback (GH), Page 559													
6 Sport Kombi (GH) 02/08→ → 6 Estate (GH), Page 558													
6 Station Wagon (GY) 08/02→08/07													
		363900	Ake		2404601	[+] 24046 18.2		Ake		2404501	[–] 24045 13	
1.8	08/02→08/07	88 / 120											
2.0	08/02→08/07	104 / 141											
2.0	03/05→08/07	108 / 147	Ake		82500100			Ake		82051500		
2.0 CiTD 4x4	10/02→02/05	89 / 121											
2.0 CiTD 4x4	10/02→02/05	100 / 136		PRO	92125503	ø 282.5 x 25 x 48.5			PRO	92125603	ø 280 x 10 x 40.2	
2.0 DI	08/02→08/07	89 / 121											
2.0 DI	08/02→08/07	100 / 136											
2.0 DI	06/05→08/07	105 / 143											
		364000	Ate		2400201	[+] 24002 18.8	⊕ rim size 18"	Ake		2458102	[–] 24581 14.3	
2.3	08/02→08/07	122 / 166											
			Ake		2404601	[+] 24046 18.2		Ake		82051500		
			Ake		82500100				PRO	92125603	ø 280 x 10 x 40.2	
			Ate		82032000		⊕ rim size 18"					
			Ate		82062900		⊕ rim size 18"					
					92166300	ø 320 x 25 x 45.9						
				PRO	92125503	ø 282.5 x 25 x 48.5						
		364100	Ake		2404601	[+] 24046 18.2		Ake		2404501	[–] 24045 13	
2.3 AWD	11/02→08/07	119 / 162											

			30 kW / hp											
6 Station Wagon (GY) 08/02→08/07														
364100				Ake		**82500100**				Ake		**82051500**		
2.3 AWD	11/02→08/07	119 / 162				**92166300**	ø 320 x 25 x 45.9				PRO	**92125603**	ø 280 x 10 x 40.2	
					PRO	**92125503**	ø 282.5 x 25 x 48.5							
6 Stufenheck (GG) 06/02→08/07 → 6 (GG), Page 557														
6 Stufenheck (GH) 08/07→ → 6 (GH), Page 558														
6 Stufenheck (GJ, GH) 12/12→ → 6 Saloon (GJ, GH), Page 559														
30X (EC) 07/91→ → MX-3 (EC), Page 568														
121 III (JASM, JBSM) 03/96→04/03														
364200				Ate		**2310101**	[–] 23101 17.5	→03/00 solid disc		Luc		**91048800**	ø 180 x 32	
1.25	03/96→04/03	55 / 75		Ate		**2310301**	[–] 23103 17.5	→03/00 vented disc		Luc		**97010200**		
				Ate		**2320001**	[–] 23200 18.8	03/00→ ⊕ man.		Luc		**84048800**	bore ø 17.5 ø 180 x 32	
				Ate		**2360406**	[–] 23604 18.8	03/00→ ⊕ autom.				**94012900**	ø 180,0 x 44	⊖ ABS
				Ate		**82029200**						**94018500**	ø 180,0 x 44	⊕ ABS
				Ate		**82062900**								
					PRO	**92075303**	ø 239.5 x 12 x 43	→03/00 ⊕ man.						
					PRO	**92051003**	ø 239.5 x 20 x 43	→03/00 ⊕ autom. 03/00→ ⊕ man.						
					PRO	**92096203**	ø 258 x 22 x 43.5	03/00→ ⊕ autom.						
364300				Ate		**2310101**	[–] 23101 17.5	→03/00 solid disc		Luc		**91048800**	ø 180 x 32	
1.3	03/96→04/03	37 / 50		Ate		**2310301**	[–] 23103 17.5	→03/00 vented disc		Luc		**97010200**		
1.8 D	03/96→04/03	44 / 60		Ate		**2320001**	[–] 23200 18.8	03/00→ ⊖ ABS		Luc		**84048800**	bore ø 17.5 ø 180 x 32	
				Ate		**2360406**	[–] 23604 18.8	03/00→ ⊕ ABS				**94012900**	ø 180,0 x 44	⊖ ABS
				Ate		**82029200**						**94018500**	ø 180,0 x 44	⊕ ABS
				Ate		**82062900**								
					PRO	**92075303**	ø 239.5 x 12 x 43	→03/00 ⊕ man.						
					PRO	**92051003**	ø 239.5 x 20 x 43	→03/00 ⊕ autom. 03/00→ ⊖ ABS						
					PRO	**92096203**	ø 258 x 22 x 43.5	02/00→						
364400				Ate		**2310101**	[–] 23101 17.5	→03/00 solid disc		Luc		**91048800**	ø 180 x 32	
1.3	03/96→04/03	44 / 60		Ate		**2310301**	[–] 23103 17.5	→03/00 vented disc		Luc		**97010200**		
				Ate		**2320001**	[–] 23200 18.8	03/00→ ⊖ ABS		Luc		**84048800**	bore ø 17.5 ø 180 x 32	
				Ate		**2360406**	[–] 23604 18.8	03/00→ ⊕ ABS				**94012900**	ø 180,0 x 44	⊖ ABS
				Ate		**82029200**						**94018500**	ø 180,0 x 44	⊕ ABS
				Ate		**82062900**								
364500					PRO	**92075303**	ø 239.5 x 12 x 43	→03/00 ⊕ man.						
1.4	07/96→10/02	44 / 60			PRO	**92051003**	ø 239.5 x 20 x 43	→03/00 ⊕ autom. 03/00→ ⊖ ABS						
					PRO	**92096203**	ø 258 x 22 x 43.5	02/00→						
121 METRO (DW) 10/96→ → DEMIO (DW), Page 566														
121 METRO Estate (DW) 10/96→ → DEMIO (DW), Page 566														
121 METRO Kombi (DW) 10/96→ → DEMIO (DW), Page 566														
121 Mk III (JASM, JBSM) 03/96→04/03 → 121 III (JASM, JBSM), Page 560														
323 ASTINA VI (BJ) 09/98→05/04 → 323 F VI (BJ), Page 560														
323 F/P Mk VI (BJ) 09/98→05/04 → 323 F VI (BJ), Page 560														
323 F VI (BJ) 09/98→05/04														
364600				Sum		**2349002**	[+] 23490 15					**91053200**	ø 200 x 36	
1.4	01/01→05/04	53 / 72												
1.4 16V	09/98→01/01	54 / 73												
1.5 16V	09/98→01/01	65 / 88												

		kW / hp											
323 F VI (BJ) 09/98→05/04													
		364600	Sum		82063400					97030100			
1.4	01/01→05/04	53 / 72											
1.4 16V	09/98→01/01	54 / 73											
1.5 16V	09/98→01/01	65 / 88			92103000	ø 235 x 22 x 46				94028500	ø 200 x 40		
		364700	Sum		2384504	[+] 23845 16.5		Ake		2404501	[–] 24045 13		
1.6	01/01→05/04	70 / 95											
1.6	01/01→05/04	72 / 98											
2.0	01/01→05/04	96 / 131	Sum		82507000					91053200	ø 200 x 36		
2.0 D	09/98→05/04	52 / 71											
2.0 TD	09/98→01/01	66 / 90	Sum		82063400					97030100			
2.0 TD	01/01→05/04	74 / 101											
					92103100	ø 257 x 24 x 47				92130200	ø 261 x 10 x 40		
										94028500	ø 200 x 40		
		364800	Sum		2384504	[+] 23845 16.5		Ake		2003101	[–] 20031 13		
1.9 16V	09/98→01/01	84 / 114											
			Sum		82507000			Ake		82051500			
			Sum		82063400					92130200	ø 261 x 10 x 40		
					92103100	ø 257 x 24 x 47							
					92110400	ø 273.5 x 24 x 47.5							
323 P V (BA) 10/96→													
		364900	Sum		2165404	[+] 21654 15				91047400	ø 200 x 36		
1.3 16V	10/96→	54 / 73											
			Sum		82058200					97011000			
					92061500	ø 235 x 18 x 45				94028500	ø 200 x 40		
		365000	Sum		2165404	[+] 21654 15				91047400	ø 200 x 36		
1.5 16V	10/96→	65 / 88											
			Sum		82058200					97011000			
					92071500	ø 235 x 22 x 45				94028500	ø 200 x 40		
		365100	Sum		2153901	[+] 21539 15				91047400	ø 200 x 36		
2.0 D	10/96→	52 / 71											
			Sum		82058200					97011000			
					92061600	ø 257 x 22 x 45				94028500	ø 200 x 40		
323 P Mk V (BA) 10/96→ → 323 P V (BA), Page 561													
323 PROTEGÉ VI (BJ) 09/98→05/04 → 323 S VI (BJ), Page 561													
323 S VI (BJ) 09/98→05/04													
		365200	Sum		2349002	[+] 23490 15				91053200	ø 200 x 36		
1.4	01/01→05/04	53 / 72											
1.4 16V	09/98→01/01	54 / 73	Sum		82063400					97030100			
1.5 16V	09/98→01/01	65 / 88											
					92103000	ø 235 x 22 x 46				94028500	ø 200 x 40		
		365300	Sum		2349002	[+] 23490 15		Ake		2003101	[–] 20031 13		
1.6	09/98→02/01	80 / 109											
		365400	Sum		2384504	[+] 23845 16.5		Ake		2404501	[–] 24045 13		
1.6	01/01→05/04	70 / 95											
1.6	01/01→05/04	72 / 98											
2.0	01/01→05/04	96 / 131	Sum		82507000					91053200	ø 200 x 36		
2.0 D	09/98→05/04	52 / 71											
2.0 TD	09/98→05/04	66 / 90	Sum		82063400					97030100			
					92103100	ø 257 x 24 x 47				92130200	ø 261 x 10 x 40		
										94028500	ø 200 x 40		
		365500	Sum		2384504	[+] 23845 16.5		Ake		2003101	[–] 20031 13		
1.9 16V	09/98→05/04	84 / 114											
			Sum		82507000			Ake		82051500			
			Sum		82063400					92130200	ø 261 x 10 x 40		
					92103100	ø 257 x 24 x 47							
					92110400	ø 273.5 x 24 x 47.5							
		365600			92062000	ø 258 x 24 x 48.5							
2.0	02/00→05/04	98 / 133											
323 S Mk VI (BJ) 09/98→05/04 → 323 S VI (BJ), Page 561													

kW / hp

626 V (GF) 05/97→10/02

		365700	Sum		2384504	[+] 23845 16.5		Ake		2404501	[–] 24045 13	
1.6	07/97→07/99	79 / 107										
1.8	05/97→12/99	66 / 90	Sum		82507000			Ake		82051500		
1.8	12/99→10/02	74 / 100										
2.0	04/98→10/02	100 / 136	Sum		82063400			Ake		91055500	ø 228.6 x 43	⊕ rear drum brake
					92062000	ø 258 x 24 x 48.5		Sum		97015900		
										92062100	ø 261 x 10 x 40.2	
										TPM0006		
		365800	Sum		2377701	[+] 23777 15	08/99→	Ake		2404501	[–] 24045 13	
2.0	05/97→10/02	85 / 115										
2.0	01/98→10/02	93 / 126	Sum		2384504	[+] 23845 16.5	→07/99	Ake		82051500		
			Sum		82507000			Ake		91055500	ø 228.6 x 43	⊕ rear drum brake
			Sum		82063400			Sum		97015900		
					92062000	ø 258 x 24 x 48.5				92062100	ø 261 x 10 x 40.2	
										TPM0006		
		365900	Sum		2384504	[+] 23845 16.5		Ake		2404501	[–] 24045 13	
2.0 DI TD	04/98→10/02	66 / 90										
2.0 TD	10/00→10/02	81 / 110	Sum		82507000			Ake		82051500		
2.0 Turbo DI	04/98→10/02	74 / 101	Sum		82063400			Ake		91055500	ø 228.6 x 43	⊕ rear drum brake
					92062000	ø 258 x 24 x 48.5		Sum		97015900		
									PRO	92125603	ø 280 x 10 x 40.2	

626 V Break (GW) 01/98→10/02 → 626 V Station Wagon (GW), Page 563

626 V Hatchback (GF) 05/97→10/02

		366000	Sum		2384504	[+] 23845 16.5		Ake		2404501	[–] 24045 13	
1.8	05/97→12/99	66 / 90										
1.8	12/99→10/02	74 / 100	Sum		82507000			Ake		82051500		
			Sum		82063400			Ake		91055500	ø 228.6 x 43	⊕ rear drum brake
					92062000	ø 258 x 24 x 48.5		Sum		97015900		
										92062100	ø 261 x 10 x 40.2	
										TPM0006		
		366100	Sum		2377701	[+] 23777 15	08/99→	Ake		2404501	[–] 24045 13	
2.0	05/97→10/02	85 / 115										
2.0 H.P.	02/98→10/02	100 / 136	Sum		2384504	[+] 23845 16.5	→07/99	Ake		82051500		
			Sum		82507000			Ake		91055500	ø 228.6 x 43	⊕ rear drum brake
			Sum		82063400			Sum		97015900		
					92062000	ø 258 x 24 x 48.5				92062100	ø 261 x 10 x 40.2	
										TPM0006		
		366200	Sum		2384504	[+] 23845 16.5		Ake		2404501	[–] 24045 13	
2.0	01/98→10/02	93 / 126										
			Sum		82507000			Ake		82051500		
			Sum		82063400					91060600	ø 228.6 x 43	
					92062000	ø 258 x 24 x 48.5				92062100	ø 261 x 10 x 40.2	
		366300	Sum		2384504	[+] 23845 16.5		Ake		2404501	[–] 24045 13	
2.0 DITD	04/98→10/02	66 / 90										
2.0 TD	10/00→10/02	81 / 110	Sum		82507000			Ake		82051500		
2.0 Turbo DI	04/98→10/02	74 / 101	Sum		82063400			Ake		91055500	ø 228.6 x 43	⊕ rear drum brake
					92062000	ø 258 x 24 x 48.5		Sum		97015900		
									PRO	92125603	ø 280 x 10 x 40.2	

626 V Saloon (GF) 05/97→10/02 → 626 V (GF), Page 562

		kW / hp											
626 V Station Wagon (GW) 01/98→10/02													
		366400	Sum		2384504	[+] 23845 16.5		Ake		2404501	[–] 24045 13	
1.8	02/98→01/00	66 / 90	Sum		82507000			Ake		82051500		
			Sum		82063400			Ake		91055500	ø 228.6 x 43	⊕ rear drum brake
					92062000	ø 258 x 24 x 48.5		Sum		97015900		
										92062100	ø 261 x 10 x 40.2	
										TPM0006		
		366500	Sum		2377701	[+] 23777 15		Ake		2404501	[–] 24045 13	
1.8	01/00→10/02	74 / 100	Sum		82507000			Ake		82051500		
			Sum		82063400			Ake		91055500	ø 228.6 x 43	⊕ rear drum brake
					92062000	ø 258 x 24 x 48.5		Sum		97015900		
										92062100	ø 261 x 10 x 40.2	
										TPM0006		
		366600	Sum		2377701	[+] 23777 15	10/99→	Ake		2404501	[–] 24045 13	
2.0	01/98→10/02	93 / 126										
2.0	02/98→10/02	85 / 116										
2.0 H.P.	02/98→10/02	100 / 136	Sum		2384504	[+] 23845 16.5	→09/99	Ake		82051500		
			Sum		82507000			Ake		91055500	ø 228.6 x 43	⊕ rear drum brake
			Sum		82063400			Sum		97015900		
					92062000	ø 258 x 24 x 48.5	→09/99			92062100	ø 261 x 10 x 40.2	
					92110400	ø 273.5 x 24 x 47.5	10/99→			TPM0006		
		366700	Sum		2377701	[+] 23777 15		Ake		2404501	[–] 24045 13	
2.0 DITD	09/99→10/02	66 / 90										
2.0 TD	10/00→10/02	81 / 110	Sum		82507000			Ake		82051500		
			Sum		82063400			Ake		91055500	ø 228.6 x 43	⊕ rear drum brake
					92110400	ø 273.5 x 24 x 47.5		Sum		97015900		
								PRO		92125603	ø 280 x 10 x 40.2	
		366800	Sum		2377701	[+] 23777 15	10/99→	Ake		2404501	[–] 24045 13	
2.0 Turbo DI	04/98→10/02	74 / 101	Sum		2384504	[+] 23845 16.5	→09/99	Ake		82051500		
			Sum		82507000			Ake		91055500	ø 228.6 x 43	⊕ rear drum brake
			Sum		82063400			Sum		97015900		
					92110400	ø 273.5 x 24 x 47.5		PRO		92125603	ø 280 x 10 x 40.2	

626 V Stufenheck (GF) 05/97→10/02 → 626 V (GF), Page 562

626 Mk V (GF) 05/97→10/02 → 626 V (GF), Page 562

626 Mk V Estate (GW) 01/98→10/02 → 626 V Station Wagon (GW), Page 563

626 Mk V Hatchback (GF) 05/97→10/02 → 626 V Hatchback (GF), Page 562

626 Mk V Station Wagon (GW) 01/98→10/02 → 626 V Station Wagon (GW), Page 563

ATENZA (GG) 06/02→08/07 → 6 (GG), Page 557

ATENZA Hatchback (GG) 08/02→08/07 → 6 Hatchback (GG), Page 558

ATENZA Station Wagon (GY) 08/02→08/07 → 6 Station Wagon (GY), Page 559

ATENZA Stufenheck (GJ, GH) 12/12→ → 6 Saloon (GJ, GH), Page 559

AVENZA Kombi (GJ, GH) 12/12→ → 6 Estate (GJ, GH), Page 558

AXELA Stufenheck (BK) 06/00→03/03 → 3 Saloon (BK), Page 556

BONGO FIENDEE Großraumlimousine (SG) 06/95→09/99 → E-SERIE MPV (SG), Page 567

BONGO FIENDEE MPV (SG) 06/95→09/99 → E-SERIE MPV (SG), Page 567

BONGO FREDA Großraumlimousine (SG) 02/99→10/01 → E-SERIE MPV (SG), Page 567

BONGO FRIENDEE Großraumlimousine (SG) 02/99→10/01 → E-SERIE MPV (SG), Page 567

BONGO FRIENDEE MPV (SG) 02/99→10/01 → E-SERIE MPV (SG), Page 567

BONGO Kasten (SR2) 03/91→05/03 → E-SERIE Box (SR2), Page 566

		kW / hp										
BOUNTY (UN) 02/99→ → B-SERIE (UN), Page 564												
B-SERIE (MJ) 11/05→11/06												
		366900	Tok		2435301	[+] 24353 16.9						
4.0 i	11/05→11/06	154 / 209										
4.0 i 4x4	11/05→11/06	154 / 209	Kel		82511700							
B-SERIE (UF) 01/90→06/99												
		367000	Ake		2367801	[+] 23678 16			91057700	ø 260 x 51		
2.2 12V	04/96→01/99	68 / 92										
2.5 D	04/96→02/99	64 / 87			92236200	ø 274 x 28 x 28			94035500	ø 260,0 x 63		
		367100	Kel		2354001	[+] 23540 16.5	02/99→		91057700	ø 260 x 51		
2.5 D	02/96→06/99	63 / 86	Ake		2367801	[+] 23678 16	→02/99		94035500	ø 260,0 x 63		
					92236200	ø 274 x 28 x 28	04/96→					
					92236300	ø 256 x 24 x 24	→04/96					
		367200	Ake		2157101	[+] 21571 17.1			91057700	ø 260 x 51		
2.5 D 4WD	02/96→06/99	63 / 86	Wag		2347201	[+] 23472 17			94035500	ø 260,0 x 63		
			Kel		2354001	[+] 23540 16.5	02/99→					
			Ake		2367801	[+] 23678 16						
		367300	Wag		2347201	[+] 23472 17			91057700	ø 260 x 51		
2.5 D 4WD	04/96→02/99	64 / 87										
2.5 D 4WD	09/98→06/99	57 / 78							94035500	ø 260,0 x 63		
2.6 12V 4WD	01/90→06/99	90 / 122										
2.6 i 4WD	01/90→02/99	92 / 125										
		367400	Ake		2367801	[+] 23678 16			91057700	ø 260 x 51		
2.6 i	01/90→02/99	92 / 125			92236200	ø 274 x 28 x 28	04/96→		94035500	ø 260,0 x 63		
					92236300	ø 256 x 24 x 24	→04/96					
B-SERIE (UN) 02/99→												
		367500	Kel		2354001	[+] 23540 16.5			94033500	ø 270 x 67.5		
2.2	11/99→08/02	68 / 92										
2.5 D	06/99→	57 / 78	Kel		82511700							
2.5 D	11/99→12/01	61 / 83										
2.5 D	12/02→	62 / 84			92136200	ø 256 x 24 x 24						
2.5 TD	02/99→03/05	86 / 117										
2.6 i	02/99→11/06	92 / 125										
		367600	Kel		2354001	[+] 23540 16.5			91063700	ø 295 x 56		
2.2 4WD	02/99→	60 / 82										
2.2 8V 4WD	06/99→	68 / 92	Kel		82511700				94035400	ø 295,0 x 67.8		
2.5 D 4WD	02/99→03/05	86 / 117										
2.5 D 4WD	06/99→	57 / 78			92136300	ø 274 x 24 x 24						
2.5 D 4WD	11/99→12/01	61 / 83										
2.5 D 4WD	11/99→07/02	65 / 88										
2.5 D 4WD	12/02→	62 / 84										
2.5 TD 4WD	06/99→07/06	80 / 109										
2.6 12V 4WD	06/99→	90 / 122										
2.6 i 4WD	02/99→11/06	92 / 125										
2.9 D 4WD	09/01→03/05	70 / 95										
B-SERIE BRAVO (MJ) 11/05→11/06 → B-SERIE (MJ), Page 564												
B-SERIE BRAVO Pickup (UF) 01/90→06/99 → B-SERIE (UF), Page 564												
B-SERIE BRAVO Pick-up (UF) 01/90→06/99 → B-SERIE (UF), Page 564												
B-SERIE BRAVO Pickup (UN) 02/99→ → B-SERIE (UN), Page 564												
B-SERIE BRAVO Pick-up (UN) 02/99→ → B-SERIE (UN), Page 564												
B-SERIE BRAVO Platform/Chassis (MJ) 11/05→11/06 → B-SERIE Platform/Chassis (MJ), Page 564												
B-SERIE BRAVO Platform/Chassis (UF) 12/90→02/99 → B-SERIE Platform/Chassis (UF), Page 564												
B-SERIE BRAVO Platform/Chassis (UN) 02/99→11/06 → B-SERIE Platform/Chassis (UN), Page 565												
B-SERIE BRAVO Pritsche/Fahrgestell (MJ) 11/05→11/06 → B-SERIE Platform/Chassis (MJ), Page 564												
B-SERIE BRAVO Pritsche/Fahrgestell (UF) 12/90→02/99 → B-SERIE Platform/Chassis (UF), Page 564												
B-SERIE BRAVO Pritsche/Fahrgestell (UN) 02/99→11/06 → B-SERIE Platform/Chassis (UN), Page 565												
B-SERIE Platform/Chassis (MJ) 11/05→11/06												
		367700	Tok		2435301	[+] 24353 16.9						
4.0	11/05→11/06	154 / 209										
			Kel		82511700							
B-SERIE Platform/Chassis (UF) 12/90→02/99												
		367800	Sum		2131501	[+] 21315 15.2			91057700	ø 260 x 51		
2.5 D	05/96→02/99	64 / 87										

		kW / hp									
B-SERIE Platform/Chassis (UF) 12/90→02/99											
2.5 D	05/96→02/99	367800 64 / 87	Ake	2367801	[+] 23678 16			94035500	ø 260,0 x 63		
				92236200	ø 274 x 28 x 28						
2.6 i	11/91→02/99	367900 92 / 125	Sum	2131501	[+] 21315 15.2			91057700	ø 260 x 51		
			Ake	2367801	[+] 23678 16			94035500	ø 260,0 x 63		
				92236200	ø 274 x 28 x 28	04/96→					
				92236300	ø 256 x 24 x 24	→04/96					
2.6 i 4x4	12/90→02/99	368000 92 / 125	Wag	2347201	[+] 23472 17			91057700	ø 260 x 51		
								94035500	ø 260,0 x 63		
B-SERIE Platform/Chassis (UN) 02/99→11/06											
2.5 TD 2.6 i	02/99→03/05 02/99→11/06	368100 86 / 117 90 / 122	Kel	2354001	[+] 23540 16.5			94033500	ø 270 x 67.5		
			Kel	82511700							
				92136200	ø 256 x 24 x 24						
2.5 TD 4x4	02/99→03/05	368200 86 / 117	Kel	2354001	[+] 23540 16.5	→MY 2002		91063700	ø 295 x 56		
			Tok	2435301	[+] 24353 16.9	MY 2002→		94035400	ø 295,0 x 67.8		
			Kel	82511700		→MY 2002					
				92136300	ø 274 x 24 x 24	→061001					
				92223000	ø 288 x 28 x 70	061001→					
				92223003	ø 288 x 28 x 70	061001→					
B-SERIE Pritsche/Fahrgestell (MJ) 11/05→11/06 → B-SERIE Platform/Chassis (MJ), Page 564											
B-SERIE Pritsche/Fahrgestell (UF) 12/90→02/99 → B-SERIE Platform/Chassis (UF), Page 564											
B-SERIE Pritsche/Fahrgestell (UN) 02/99→11/06 → B-SERIE Platform/Chassis (UN), Page 565											
BT-50 (CD, UN) 08/06→											
2.5 MRZ-CD 4x4 2.5 TDi 4x4 2.6 4x4 2.6 4x4 3.0 CDVi 4x4	12/06→ 08/06→ 10/06→ 10/06→ 12/06→	368300 105 / 143 81 / 110 92 / 125 115 / 156 115 / 156	Tok	2435301	[+] 24353 16.9			91063700	ø 295 x 56		
			Kel	82511700				94035400	ø 295,0 x 67.8		
				92223000	ø 288 x 28 x 70						
				92223003	ø 288 x 28 x 70						
2.5 TDi 2.6 3.0 CDVi	08/06→ 10/06→ 12/06→	368400 81 / 110 92 / 125 115 / 156	Kel	2354001	[+] 23540 16.5			94033500	ø 270 x 67.5		
				92136200	ø 256 x 24 x 24						
BT-50 Pickup (B22, B32, UP) 11/11→											
2.2 MZ-CD 2.2 MZ-CD 3.2 MZ-CD	11/11→ 11/11→ 11/11→	368500 88 / 120 110 / 150 147 / 200		2563201	[+] 25632 16.4			94033500	ø 270 x 67.5	⊖ incr. ground clear.	
								94035400	ø 295,0 x 67.8	⊕ incr. ground clear.	
2.2 MZ-CD 4WD 2.2 MZ-CD 4WD 3.2 MZ-CD 4WD	11/11→ 11/11→ 11/11→	368600 88 / 120 110 / 150 147 / 200		2563201	[+] 25632 16.4			94035400	ø 295,0 x 67.8		
BT-50 Pick-up (B22, B32, UP) 11/11→ → BT-50 Pickup (B22, B32, UP), Page 565											
BT-50 Pickup (CD, UN) 08/06→ → BT-50 (CD, UN), Page 565											
BT-50 Pick-up (CD, UN) 08/06→ → BT-50 (CD, UN), Page 565											
BT-50 Platform/Chassis (CD, UN) 08/06→											
2.5 CDVi 2.5 TDi 2.6 3.0 CDVi	12/06→ 08/06→ 10/06→ 12/06→	368700 105 / 143 81 / 110 92 / 125 115 / 156	Kel	2354001	[+] 23540 16.5			94033500	ø 270 x 67.5		
				92136200	ø 256 x 24 x 24						
2.5 TDi 4WD 2.6 4WD 2.6 4WD 3.0 CDVi 4x4	08/06→ 10/06→ 10/06→ 12/06→	368800 81 / 110 92 / 125 115 / 156 115 / 156	Tok	2435301	[+] 24353 16.9			91063700	ø 295 x 56		
			Kel	82511700				94035400	ø 295,0 x 67.8		
				92223000	ø 288 x 28 x 70						
				92223003	ø 288 x 28 x 70						

		kW / hp									
BT-50 Pritsche/Fahrgestell (CD, UN) 08/06→ → BT-50 Platform/Chassis (CD, UN), Page 565											
CAPELLA V (GF) 05/97→10/02 → 626 V (GF), Page 562											
CAPELLA V Combi (GW) 01/98→10/02 → 626 V Station Wagon (GW), Page 563											
CAPELLA V Hatchback (GF) 05/97→10/02 → 626 V Hatchback (GF), Page 562											
CAPELLA V Station Wagon (GW) 01/98→10/02 → 626 V Station Wagon (GW), Page 563											
CX-5 (KE, GH) 11/11→											
		368900	Ake		2556401	[+] 25564 15.8			2554001	[+] 25540 14.4	
2.0	11/11→	121 / 165									
2.0	07/12→	114 / 155		PRO	92257403	ø 297 x 28 x 51.5			92242703	ø 303 x 10 x 39.6	
2.0 AWD	11/11→	118 / 160									
2.0 AWD	07/12→	114 / 155									
2.2 D	04/12→	110 / 150									
2.2 D AWD	04/12→	110 / 150									
2.2 D AWD	04/12→	129 / 175									
2.5 AWD	02/13→	138 / 188									
CX-7 (ER) 06/06→											
		369000	Sum		2454401	[+] 24544 17.5			2454501	[–] 24545 17.9	
2.2 MZR-CD	09/09→	127 / 173									
2.2 MZR-CD AWD	09/09→	136 / 185	Sum		82513100			Tok	82507700		
2.2 MZR-CD AWD	01/12→	120 / 163		PRO	92203403	ø 320 x 28 x 48.5			92223603	ø 325 x 18 x 56.2	
					TPM0006				TPM0006		
		369100	Sum		2454401	[+] 24544 17.5			2454501	[–] 24545 17.9	
2.3 DISi	06/06→06/09	177 / 241									
2.3 DISI	01/12→	182 / 247	Sum		82513100			Tok	82507700		
				PRO	92180803	ø 296 x 28 x 49			92180903	ø 302 x 18 x 57	
					TPM0006				TPM0006		
		369200	Sum		2454401	[+] 24544 17.5			2454501	[–] 24545 17.9	
2.3 DISI AWD	01/12→	182 / 247									
2.3 MZR DISI Turbo	11/06→	175 / 238	Sum		82513100			Tok	82507700		
2.3 MZR DISI Turbo	01/07→	179 / 243									
2.3 MZR DISI Turbo	10/07→	190 / 258									
2.3 MZR DISI Turbo	09/09→	191 / 260		PRO	92203403	ø 320 x 28 x 48.5	⊕ man.		92180903	ø 302 x 18 x 57	
2.3 MZR DISI Turbo AWD	01/07→	179 / 243									
					TPM0006				TPM0006		
		369300	Sum		2454401	[+] 24544 17.5			2454501	[–] 24545 17.9	
2.5 MZR	09/09→	120 / 163									
			Sum		82513100			Tok	82507700		
					TPM0006				92180903	ø 302 x 18 x 57	
									TPM0006		
CX-9 (TB) 01/07→											
		369400	Sum		2454401	[+] 24544 17.5			2454501	[–] 24545 17.9	
3.5	01/07→	193 / 263									
3.5 AWD	01/07→	193 / 263	Sum		82513100			Tok	82507700		
				PRO	92203403	ø 320 x 28 x 48.5			92223603	ø 325 x 18 x 56.2	
		369500	Sum		2454401	[+] 24544 17.5			2454501	[–] 24545 17.9	
3.7	01/07→	204 / 277									
3.7 AWD	01/07→	204 / 277	Sum		82513100			Tok	82507700		
				PRO	92203403	ø 320 x 28 x 48.5					
DEMIO (DE) 10/07→ → 2 (DE), Page 555											
DEMIO (DW) 10/96→											
		369600	Sum		2165404	[+] 21654 15			91056300	ø 200 x 32	
1.3 16V	08/98→	46 / 63									
1.3 i 16V	08/98→04/00	53 / 72	Sum		82027300				97037600		
1.5 16V	04/00→07/03	55 / 75									
1.5 i 16V	10/96→12/02	64 / 87			92071500	ø 235 x 22 x 45			94028500	ø 200 x 40	
DEMIO (DY) 02/03→ → 2 (DY), Page 555											
E-SERIE Box (SG) 04/04→07/06											
		369700	Sum		2351501	[+] 23515 16					
E2000	04/04→07/06	71 / 97									
E-SERIE Box (SR2) 03/91→05/03											
		369800	Ake		2000201	[+] 20002 15	→08/99		91040100	ø 260 x 51	→08/99 ⊕ single tyre
2200 D 4WD	03/91→05/03	47 / 64									
E2200 D 4WD	02/97→05/03	52 / 71	Sum		2351501	[+] 23515 16	08/99→		91050200	ø 220 x 56.5	→08/99 ⊕ dual tyres

		kW / hp										
E-SERIE Box (SR2) 03/91→05/03												
		369800	Sum		82047400				97016000		⊕ dual tyres
2200 D 4WD	03/91→05/03	47 / 64									
E2200 D 4WD	02/97→05/03	52 / 71							94035500	ø 260,0 x 63	→08/99 ⊕ single tyre
		369900	Ake		2000201	[+] 20002 15	→08/99		91040100	ø 260 x 51	→08/99 ⊕ single tyre
E2000	06/94→05/03	70 / 95									
E2200 D	02/97→08/02	52 / 71	Sum		2351501	[+] 23515 16	08/99→		91050200	ø 220 x 56.5	→08/99 ⊕ dual tyres
			Sum		82047400				97016000		⊕ dual tyres
					92235900	ø 268 x 20 x 20	→08/99		94035500	ø 260,0 x 63	→08/99 ⊕ single tyre
		370000	Ake		2000201	[+] 20002 15			91040100	ø 260 x 51	⊕ single tyre
E2000 4WD	04/97→08/99	71 / 97							91050200	ø 220 x 56.5	⊕ dual tyres
									94035500	ø 260,0 x 63	⊕ single tyre
		370100	Ake		2000201	[+] 20002 15			91040100	ø 260 x 51	⊕ single tyre
E2200 D	03/91→05/03	47 / 64	Sum		82047400				91050200	ø 220 x 56.5	⊕ dual tyres
					92235900	ø 268 x 20 x 20			97016000		⊕ dual tyres
									94035500	ø 260,0 x 63	⊕ single tyre
E-SERIE Bus 03/91→05/03												
		370200	Ake		2000201	[+] 20002 15	→08/99		91040100	ø 260 x 51	⊕ single tyre →08/99
E2200 D	03/91→05/03	47 / 64	Sum		2348801	[+] 23488 16	08/99→		91050200	ø 220 x 56.5	⊕ dual tyres →08/99
					92236200	ø 274 x 28 x 28	→08/99		94035500	ø 260,0 x 63	→08/99
E-SERIE Großraumlimousine (SG) 06/95→09/99 → E-SERIE MPV (SG), Page 567												
E-SERIE Großraumlimousine (SG) 02/99→10/01 → E-SERIE MPV (SG), Page 567												
E-SERIE Kasten (SG) 04/04→07/06 → E-SERIE Box (SG), Page 566												
E-SERIE Kasten (SR2) 03/91→05/03 → E-SERIE Box (SR2), Page 566												
E-SERIE MPV (SG) 06/95→09/99												
		370300	Ake		2000201	[+] 20002 15			91040100	ø 260 x 51	⊕ single tyre
2.0 i (SGE3, SGEW)	11/97→02/99	74 / 101			92236200	ø 274 x 28 x 28			91050200	ø 220 x 56.5	⊕ dual tyres
									94035500	ø 260,0 x 63	
		370400	Sum		2351501	[+] 23515 16		Ake	2131901	[+] 21319 13	
2.5 i (SG5)	06/95→02/99	117 / 159									
2.5 TD (SGLW, SGL35)	06/95→09/99	92 / 125									
2.5 TD 4x4 (SGL5, SGLR)	06/95→09/99	92 / 125									
E-SERIE MPV (SG) 02/99→10/01												
		370500	Sum		2348801	[+] 23488 16					
2.0 i (SGE3, SGEW)	08/99→10/01	74 / 101									
		370600	Sum		2351501	[+] 23515 16		Ake	2131901	[+] 21319 13	
2.5 i (SG5)	02/99→10/01	117 / 159									
2.5 TD (SGL35, SGLW)	09/99→10/01	92 / 125									
2.5 TD 4x4 (SGL5, SGLR)	09/99→10/01	92 / 125									
E-SERIE Platform/Chassis (SD1, SL) 09/99→09/04												
		370700	Sum		2351501	[+] 23515 16					
E2000	09/99→09/04	71 / 97									
E2200	09/99→07/04	52 / 71									
E-SERIE Platform/Chassis (SD1) 04/97→07/99												
		370800	Ake		2000201	[+] 20002 15			91040100	ø 260 x 51	⊕ single tyre
E2200	04/97→07/99	52 / 71			92235900	ø 268 x 20 x 20			91050200	ø 220 x 56.5	⊕ dual tyres
									94035500	ø 260,0 x 63	⊕ single tyre
E-SERIE Pritsche/Fahrgestell (SD1, SL) 09/99→09/04 → E-SERIE Platform/Chassis (SD1, SL), Page 567												
E-SERIE Pritsche/Fahrgestell (SD1) 04/97→07/99 → E-SERIE Platform/Chassis (SD1), Page 567												
ETUDE VI (BJ) 09/98→05/04 → 323 S VI (BJ), Page 561												
ETUDE VI (BJ) 09/98→05/04 → 323 F VI (BJ), Page 560												
EUNOS 30X (EC) 07/91→ → MX-3 (EC), Page 568												
EUNOS 500 (CA) 04/94→10/99 → XEDOS 6 (CA), Page 571												
EUNOS 800 (TA) 07/93→09/02 → XEDOS 9 (TA), Page 571												
FAMILIA V (BA) 10/96→ → 323 P V (BA), Page 561												

		kW / hp										
FAMILIA VI (BJ) 09/98→05/04 → 323 S VI (BJ), Page 561												
FAMILIA VI (BJ) 09/98→05/04 → 323 F VI (BJ), Page 560												
FIGHTER Pickup 08/02→07/06												
370900												
2.5 TDiC 4WD	08/02→07/06	80 / 109	Kel		**2354001**	[+] 23540 16.5			**91063700**	ø 295 x 56	
					92136300	ø 274 x 24 x 24			**94035400**	ø 295,0 x 67.8	
FIGHTER Pick-up 08/02→07/06 → FIGHTER Pickup, Page 568												
MARATHON Bus 03/91→05/03 → E-SERIE Bus, Page 567												
MILLENIA (TA) 07/93→09/02 → XEDOS 9 (TA), Page 571												
MILLENIA Saloon (TA) 07/93→09/02 → XEDOS 9 (TA), Page 571												
MILLENIA Stufenheck (TA) 07/93→09/02 → XEDOS 9 (TA), Page 571												
MPV I (LV) 03/95→09/99												
371000			Sum		**2351501**	[+] 23515 16		Ake	**2131901**	[+] 21319 13	
2.5 TD	05/96→09/99	85 / 115									
3.0 i V6	05/96→09/99	109 / 148	Sum		**82047400**				**92130100**	ø 286 x 18 x 56.5	
3.0 i V6 (LV10)	03/95→09/99	113 / 154			**92130000**	ø 276 x 28 x 58					
MPV II (LW) 09/99→02/06												
371100			Sum		**2351501**	[+] 23515 16			**91058400**	ø 254 x 52	
2.0	09/99→08/00	90 / 122									
2.0	08/00→07/02	88 / 120	Sum		**82513100**				**94038300**	ø 254 x 60.8	
					92079200	ø 274 x 28 x 51					
371200			Sum		**2351501**	[+] 23515 16		Sum	**2421501**	[+] 24215 16	⊕ ABS
2.0 DI	07/02→02/06	100 / 136									
3.0 i V6	03/02→02/06	147 / 200	Sum		**82513100**				**82505300**		⊕ ABS
					92148100	ø 296 x 28 x 51			**91058400**	ø 254 x 52	⊖ ABS
									92242803	ø 286 x 18 x 57.8	⊕ ABS
									94038300	ø 254 x 60.8	⊖ ABS
371300			Sum		**2351501**	[+] 23515 16		Sum	**2421501**	[+] 24215 16	⊕ ABS
2.3	07/02→02/06	104 / 141									
			Sum		**82513100**				**82505300**		⊕ ABS
					92079200	ø 274 x 28 x 51			**91058400**	ø 254 x 52	⊖ ABS
									92242803	ø 286 x 18 x 57.8	⊖ ABS
									94038300	ø 254 x 60.8	⊖ ABS
371400			Sum		**2351501**	[+] 23515 16			**91058400**	ø 254 x 52	
2.5 V6	09/99→03/02	125 / 170									
			Sum		**82513100**				**94038300**	ø 254 x 60.8	
					92079200	ø 274 x 28 x 51					
					92148100	ø 296 x 28 x 51					
MPV III 02/06→												
371500			Sum		**2454401**	[+] 24544 17.5			**2454501**	[–] 24545 17.9	
2.3	02/06→	120 / 163									
2.3 4WD	02/06→	120 / 163									
2.3 4WD	02/06→	180 / 245									
MPV Mk II (LW) 09/99→02/06 → MPV II (LW), Page 568												
MX-3 (EC) 07/91→												
371600			Sum		**2153901**	[+] 21539 15		Ake	**2000801**	[–] 20008 13	⊕ rear disc brake
1.6 i	07/91→	65 / 88									
1.6 i	01/94→	79 / 107	Sum		**82027300**			Ake	**82051600**		⊕ rear disc brake
1.8 i V6	01/94→	95 / 129			**92061600**	ø 257 x 22 x 45			**91047400**	ø 200 x 36	⊕ rear drum brake
									97030100		⊕ rear drum brake
									92061700	ø 250 x 9 x 34.5	⊕ rear disc brake
									94028500	ø 200 x 40	
MX-5 II (NB) 01/98→10/05												
371700			Sum		**2386301**	[–] 23863 15	⊕ sports susp.	Ake	**2338704**	[+] 23387 13.3	→07/03
1.6 16V	05/98→10/05	81 / 110									

		kW / hp											
MX-5 II (NB) 01/98→10/05													
		371700	Sum		2335404	[+] 23354 14	⊖ sports susp.	Ake		2402901	[+] 24029 12.6	08/03→
1.6 16V	05/98→10/05	81 / 110	Sum		82060000			Ake		82507200		
					92096800	ø 255 x 20 x 45	⊖ sports susp.	Ake		82063200		06/03→
					92175900	ø 270 x 22 x 46.5	⊕ sports susp.			92061700	ø 250 x 9 x 34.5	→07/03
				PRO	92175903	ø 270 x 22 x 46.5	⊕ sports susp.		PRO	92188303	ø 276 x 10 x 35	08/03→
		371800	Sum		2386301	[–] 23863 15	08/00→	Ake		2338704	[+] 23387 13.3	→07/00
1.8	01/98→07/02	103 / 140	Sum		2335404	[+] 23354 14	→07/00	Ake		2387601	[+] 23876 12	08/00→
			Sum		82060000		→07/00	Ake		82507200		
			Sum		82062000		08/00→			92061700	ø 250 x 9 x 34.5	
					92096800	ø 255 x 20 x 45	→07/00					
		371900	Sum		2386301	[–] 23863 15		Ake		2387601	[+] 23876 12	
1.8	08/02→10/05	107 / 146										
1.8 16V	11/00→10/05	102 / 139										
1.8 16V	11/00→10/05	107 / 146	Sum		82062000			Ake		2402901	[+] 24029 12.6	06/03→
					92175900	ø 270 x 22 x 46.5		Ake		82507200		
				PRO	92175903	ø 270 x 22 x 46.5		Ake		82063200		06/03→
									PRO	92188303	ø 276 x 10 x 35	⊕ sports susp. →07/05
		372000	Sum		2386301	[–] 23863 15	08/00→	Ake		2338704	[+] 23387 13.3	→07/03
1.8 16V	05/98→10/05	103 / 140	Sum		2335404	[+] 23354 14	→07/00	Ake		2402901	[+] 24029 12.6	08/03→
			Sum		82060000		→07/00	Ake		82507200		
			Sum		82062000		08/00→	Ake		82063200		06/03→
					92096800	ø 255 x 20 x 45	→07/00			92061700	ø 250 x 9 x 34.5	→07/03
									PRO	92188303	ø 276 x 10 x 35	08/03→
		372100	Sum		2386301	[–] 23863 15		Ake		2402901	[+] 24029 12.6	
1.8 i	04/02→10/05	113 / 154										
1.8 i Turbo	01/02→10/02	157 / 214										
1.8 i Turbo	04/02→10/05	136 / 185	Sum		82062000			Ake		82063200		
					92175900	ø 270 x 22 x 46.5			PRO	92188303	ø 276 x 10 x 35	
				PRO	92175903	ø 270 x 22 x 46.5						
MX-5 III (NC) 03/05→													
		372200	Adv		2429701	[–] 24297 15		Sum		2429801	[+] 24298 14	
1.8	03/05→	93 / 126										
2.0	03/05→	118 / 160	Sum		82060000			Sum		82512000		
				PRO	92175603	ø 290 x 22 x 45			PRO	92181403	ø 280 x 10 x 40	
MX-5 Mk II (NB) 01/98→10/05 → MX-5 II (NB), Page 568													
MX-5 Mk III (NC) 03/05→ → MX-5 III (NC), Page 569													
PREMACY (CP) 07/99→03/05													
		372300	Sum		2384504	[+] 23845 16.5		Ake		2404501	[–] 24045 13	⊕ rear disc brake
1.9	07/99→03/05	74 / 100										
1.9	07/99→03/05	84 / 114	Sum		82507000			Ake		82051500		
2.0 TD	10/99→07/00	66 / 90	Sum		82063400			Ake		91055500	ø 228.6 x 43	⊕ rear drum brake →12/99
					92062000	ø 258 x 24 x 48.5	5 seats			91060600	ø 228.6 x 43	⊕ rear drum brake 01/00→
					92110400	ø 273.5 x 24 x 47.5	7 seats	Sum		97015900		
										92062100	ø 261 x 10 x 40.2	5 seats
									PRO	92125603	ø 280 x 10 x 40.2	7 seats
										TPM0006		5 seats
		372400	Sum		2377701	[+] 23777 15		Ake		2404501	[–] 24045 13	
2.0	11/01→03/05	96 / 131										

		kW / hp									
PREMACY (CP) 07/99→03/05											
372400			Sum		82507000			Ake		82051500		
2.0	11/01→03/05	96 / 131	Sum		82063400					92062100	ø 261 x 10 x 40.2	5 seats
					92062000	ø 258 x 24 x 48.5	5 seats		PRO	92125603	ø 280 x 10 x 40.2	7 seats
					92110400	ø 273.5 x 24 x 47.5	7 seats			TPM0006		5 seats
372500			Ate		2372301	[–] 23723 18.2		Ate		2413701	[–] 24137 16.7	
2.0	02/05→03/05	107 / 145										
2.3 SVT	02/05→03/05	122 / 166	Ate	epad	2372381	[–] 23723 18.2		Ate	epad	2413781	[–] 24137 16.7	
			Ate		82032000			Ate		82062900		
			Ate		82062900			Ate		82503500		
					92130400	ø 300 x 25 x 48.5	⊕ rim size 16"			92130600	ø 280 x 11 x 40.9	⊕ rim size 15"
				PRO	92130303	ø 277.9 x 25 x 48.5	⊕ rim size 15"			92148200	ø 302 x 11 x 40.8	⊕ rim size 16"
									PRO	92148203	ø 302 x 11 x 40.8	⊕ rim size 16"
372600			Sum		2377701	[+] 23777 15	7 seats	Ake		2404501	[–] 24045 13	⊕ rear disc brake
2.0 TD	07/00→03/05	74 / 101	Sum		2384504	[+] 23845 16.5	5 seats	Ake		82051500		
			Sum		82507000					91060600	ø 228.6 x 43	⊕ rear drum brake
			Sum		82063400			Sum		97015900		
					92062000	ø 258 x 24 x 48.5	5 seats			92062100	ø 261 x 10 x 40.2	5 seats
					92110400	ø 273.5 x 24 x 47.5	7 seats		PRO	92125603	ø 280 x 10 x 40.2	7 seats
										TPM0006		5 seats
PROCEED/DRIFTER (UF) 01/90→06/99 → B-SERIE (UF), Page 564											
PROCEED / DRIFTER (UN) 02/99→ → B-SERIE (UN), Page 564											
PROCEED (UN) 02/99→ → B-SERIE (UN), Page 564											
RX 7 III (FD) 07/92→08/02											
372700					92079500	ø 294 x 22 x 67		Ake		2404501	[–] 24045 13	
Wankel Twin Turbo	07/92→08/02	176 / 239						Ake		82051500		
										92152800	ø 294 x 20 x 45	
RX 7 Mk III (FD) 07/92→08/02 → RX 7 III (FD), Page 570											
RX 8 (SE17) 10/03→06/12											
372800			Sum		2404201	[–] 24042 16.3		NBK		2403901	[+] 24039 14.4	
2.6 Wankel	10/03→06/12	141 / 192		PRO	92174403	ø 323 x 24 x 45	⊕ sports susp.		PRO	92174503	ø 302 x 18 x 43.5	
				PRO	92261503	ø 302 x 24 x 45	⊖ sports susp.					
372900			Sum		2404201	[–] 24042 16.3		NBK		2403901	[+] 24039 14.4	
2.6 Wankel	10/03→06/12	170 / 231										
2.6 Wankel	11/03→06/12	158 / 215										
2.6 Wankel	11/03→06/12	177 / 241		PRO	92174403	ø 323 x 24 x 45	⊕ sports susp.		PRO	92174503	ø 302 x 18 x 43.5	→136.002
				PRO	92261503	ø 302 x 24 x 45	⊖ sports susp.					
SOHO III (JASM, JBSM) 03/96→04/03 → 121 III (JASM, JBSM), Page 560											
TRIBUTE (EP) 03/00→05/08											
373000			Ate		2378701	[–] 23787 18.3	⊕ rear drum brake	Ate		2467001	[–] 24670 17.1	⊕ rear disc brake
2.0	03/00→05/08	91 / 124										
2.0 4WD	03/00→05/08	91 / 124										
2.3 All-wheel Drive	07/06→05/08	109 / 148	Ate		2443901	[–] 24439 15	⊕ rear disc brake			91060600	ø 228.6 x 43	⊕ rear drum brake
2.3 AWD	04/04→05/08	110 / 150										
2.3 GX	12/03→10/04	110 / 150	Ate		82029300			Sum		97015900		⊕ rear drum brake
3.0 V6 24V 4WD	03/00→05/08	145 / 197										
3.0 V6 AWD	04/04→05/08	149 / 203	Ate		82062900				PRO	92197803	ø 302 x 12 x 56	⊕ rear disc brake
				PRO	92146503	ø 278 x 24 x 47	⊕ rear drum brake					
				PRO	92197703	ø 303 x 26 x 47	⊕ rear disc brake					
TRIBUTE Closed (EP) 03/00→05/08 → TRIBUTE (EP), Page 570											
TRIBUTE Geschlossen (EP) 03/00→05/08 → TRIBUTE (EP), Page 570											

VERISA (ND) 07/04→

			kW / hp											
		373100												
1.5	07/04→	83 / 113		Ate		2360406	[–] 23604 18.8							
				Ate		82029200								
				Ate		82062900								

XEDOS 6 (CA) 04/94→10/99

		373200		Sum		2384504	[+] 23845 16.5			Sum		2176603	[–] 21766 14.8	
1.6 16V	06/94→10/99	79 / 107												
1.8	04/94→10/99	85 / 116												
2.0 V6	06/94→10/99	103 / 140		Sum		82507000						82033500		
				Sum		82063400						92062100	ø 261 x 10 x 40.2	
						92062000	ø 258 x 24 x 48.5					TPM0006		

XEDOS 9 (TA) 07/93→09/02

		373300		Ake		2157101	[+] 21571 17.1			Ake		2131901	[+] 21319 13	
2.0	08/98→08/00	118 / 160												
2.0 24V	08/93→01/00	105 / 143												
2.3 24V	02/95→01/00	155 / 211		Ake		82039400						82033500		
2.5	09/00→09/02	147 / 200												
2.5 24V	07/93→07/00	123 / 167				92079200	ø 274 x 28 x 51					92093000	ø 286 x 9.5 x 56.5	
2.5 V6	07/00→09/02	120 / 163												

CLUB II 06/99→

			kW / hp											
		373400		Ben		2090603	[+] 20906 18					91038000	ø 165 x 32	
1.4 i	06/99→	55 / 75		Ben		82032200				Ben		97004600		
						92067300	ø 247 x 10 x 32.5					84038000	bore ø 19 ø 165 x 32	
												94014100	ø 164,9 x 38.5	

MONTE CARLO 01/98→

		373500		Wag		2335801	[+] 23358 18			Ake		2336101	[+] 23361 15	
6.0 V12	01/98→	290 / 394												

A-CLASS (W168) 07/97→08/04

		373600		Luc		2307003	[o] 23070 16.5	SWB wheelb. 2423 mm				91053000	ø 180 x 42	
A 140 (168.031, 168.131)	07/97→08/04	60 / 82												
A 140 (168.031, 168.131)	01/01→08/04	60 / 82		Luc		2307004	[o] 23070 16.5	LWB wheelb. 2593 mm		Luc		97014100		
						98021301	L90					84053000	bore ø 17.5 ø 180 x 42	J 078974→ SWB wheelb. 2423 mm LWB wheelb. 2523 mm
						82058600						84053001	bore ø 19 ø 180 x 42	→J 078973 SWB wheelb. 2423 mm
						82058600		SWB wheelb. 2423 mm				94020200	ø 180,0 x 48	
				Luc		82058700		LWB wheelb. 2593 mm						
				Luc		82063500								
					PRO	92091203	ø 260 x 12 x 40.5	SWB wheelb. 2423 mm						
					PRO	92091303	ø 260 x 22 x 40.5	LWB wheelb. 2593 mm						
						TPM0002								
		373700		Luc		2307003	[o] 23070 16.5					91053000	ø 180 x 42	
A 140 (168.031)	07/97→08/04	60 / 82												
A 140 (168.031)	07/97→08/04	60 / 82				98021301	L90			Luc		97014100		
						82058600						84053000	bore ø 17.5 ø 180 x 42	J 078974→
					PRO	92091203	ø 260 x 12 x 40.5					84053001	bore ø 19 ø 180 x 42	→J 078973
						TPM0002						94020200	ø 180,0 x 48	
		373800		Luc		2307004	[o] 23070 16.5					91053000	ø 180 x 42	
A 140 (168.131)	01/01→08/04	60 / 82												

A-CLASS (W168) 07/97→08/04

		kW / hp												
A 140 (168.131)	01/01→08/04	373800 60 / 82		98021301	L90		Luc	97014100		
				82058600				84053000	bore ø 17.5 ø 180 x 42	
			Luc	82058700				94020200	ø 180,0 x 48	
				PRO 92091303	ø 260 x 22 x 40.5					
				TPM0002						
A 160 (168.033, 168.133)	07/97→08/04	373900 75 / 102	Luc	2307004	[o] 23070 16.5		Luc	2313803	[–] 23138 14.6	LWB wheelb. 2593 mm
				98021301	L90		Luc	82060300		LWB wheelb. 2593 mm
				82058600				91053000	ø 180 x 42	SWB wheelb. 2423 mm
			Luc	82058700			Luc	97014100		SWB wheelb. 2423 mm
			Luc	82063500				84053000	bore ø 17.5 ø 180 x 42	SWB wheelb. 2423 mm J 078974→
				PRO 92091303	ø 260 x 22 x 40.5			84053001	bore ø 19 ø 180 x 42	→J 078973 SWB wheelb. 2423 mm
				TPM0002				PRO 92099703	ø 258 x 8 x 55.3	LWB wheelb. 2593 mm
								TPM0002		LWB wheelb. 2593 mm
								94020200	ø 180,0 x 48	SWB wheelb. 2423 mm
								91032800	ø 164 x 20	LWB wheelb. 2593 mm
								97011600		LWB wheelb. 2593 mm
A 160 (168.033)	07/97→08/04	374000 75 / 102	Luc	2307004	[o] 23070 16.5			91053000	ø 180 x 42	
				98021301	L90		Luc	97014100		
				82058600				84053000	bore ø 17.5 ø 180 x 42	J 078974→
			Luc	82058700				84053001	bore ø 19 ø 180 x 42	→J 078973
				PRO 92091303	ø 260 x 22 x 40.5			94020200	ø 180,0 x 48	
				TPM0002						
A 160 (168.133)	01/01→08/04	374100 75 / 102	Luc	2307004	[o] 23070 16.5		Luc	2313803	[–] 23138 14.6	
				98021301	L90		Luc	82060300		
				82058600				PRO 92099703	ø 258 x 8 x 55.3	
			Luc	82058700				TPM0002		
				PRO 92091303	ø 260 x 22 x 40.5			91032800	ø 164 x 20	
				TPM0002				97011600		
A 160 CDI (168.006)	02/01→08/04	374200 55 / 75	Luc	2307004	[o] 23070 16.5			91053000	ø 180 x 42	
A 160 CDI (168.007)	07/98→02/01	44 / 60		98021301	L90		Luc	97014100		
				82058600				84053000	bore ø 17.5 ø 180 x 42	
			Luc	82063500				94020200	ø 180,0 x 48	
				PRO 92091203	ø 260 x 12 x 40.5					
				TPM0002						
A 170 CDI (168.008)	07/98→02/01	374300 66 / 90	Luc	2307004	[o] 23070 16.5			91053000	ø 180 x 42	
A 170 CDI (168.009)	02/01→08/04	70 / 95		98021301	L90		Luc	97014100		
				82058600				84053000	bore ø 17.5 ø 180 x 42	
			Luc	82058700				94020200	ø 180,0 x 48	
			Luc	82063500						
				PRO 92091303	ø 260 x 22 x 40.5					

		kW / hp											
A-CLASS (W168) 07/97→08/04													
A 170 CDI (168.008)	07/98→02/01	374300 66 / 90			TPM0002								
A 170 CDI (168.009)	02/01→08/04	70 / 95											
A 170 CDI (168.009, 168.109)	02/01→08/04	374400 70 / 95	Luc		2307004	[o] 23070 16.5		Luc		2313803	[–] 23138 14.6	LWB wheelb. 2593 mm
					98021301	L90		Luc		82060300		LWB wheelb. 2593 mm
					82058600					91053000	ø 180 x 42	SWB wheelb. 2423 mm
			Luc		82058700			Luc		97014100		SWB wheelb. 2423 mm
			Luc		82063500					84053000	bore ø 17.5 ø 180 x 42	SWB wheelb. 2423 mm
					92091303	ø 260 x 22 x 40.5				92099703	ø 258 x 8 x 55.3	LWB wheelb. 2593 mm
					TPM0002					TPM0002		LWB wheelb. 2593 mm
										94020200	ø 180,0 x 48	SWB wheelb. 2423 mm
										91032800	ø 164 x 20	LWB wheelb. 2593 mm
										97011600		LWB wheelb. 2593 mm
A 170 CDI (168.109)	02/01→08/04	374500 70 / 95	Luc		2307004	[o] 23070 16.5		Luc		2313803	[–] 23138 14.6	
					98021301	L90		Luc		82060300		
					82058600					92099703	ø 258 x 8 x 55.3	
			Luc		82058700					TPM0002		
			Luc		82063500					91032800	ø 164 x 20	
					92091303	ø 260 x 22 x 40.5				97011600		
					TPM0002							
A 190 (168.032, 168.132)	03/99→08/04	374600 92 / 125	Luc		2307004	[o] 23070 16.5		Luc		2313803	[–] 23138 14.6	
					98021301	L90		Luc		82060300		
					82058600					92099703	ø 258 x 8 x 55.3	
			Luc		82058700					TPM0002		
			Luc		82063500					91032800	ø 164 x 20	
					92099603	ø 276 x 22 x 35.5				97011600		
					TPM0002							
A 210 (168.035, 168.135)	03/02→08/04	374700 103 / 140	Luc		2307004	[o] 23070 16.5		Luc		2313803	[–] 23138 14.6	
					98021301	L90		Luc		82060300		
					82058600					92099703	ø 258 x 8 x 55.3	
			Luc		82058700					TPM0002		
			Luc		82063500					91032800	ø 164 x 20	
					92124403	ø 276 x 22 x 35.5				97011600		
					TPM0002							
A-CLASS (W169) 09/04→06/12													
A 150 (169.031, 169.331)	09/04→06/12	374800 70 / 95	Luc		2407701	[o] 24077 19		Luc		2313805	[–] 23138 14.6	
A 160 (169.031, 169.331)	04/09→06/12	70 / 95			98024701	L95		Luc		82060300		
			Luc		82055800					92132103	ø 258 x 8 x 57.2	
			Luc		82063300					TPM0002		
					92131803	ø 276 x 12.2 x 44.6				91032800	ø 164 x 20	
					TPM0002					97011600		
A 160 CDI (169.006, 169.306)	09/04→06/12	374900 60 / 82	Luc		2407701	[o] 24077 19	solid disc ⊖ incr. payload →J342201 →2006-06-02	Luc		2313805	[–] 23138 14.6	

		kW / hp												
A-CLASS (W169) 09/04→06/12														
		374900	Luc		2407702	[o] 24077 19	vented disc ⊕ incr. payload →J342201 →2006-06-02		Luc		82060300		
A 160 CDI (169.006, 169.306)	09/04→06/12	60 / 82					J264311→ 2005-11-24→			PRO	92132103	ø 258 x 8 x 57.2	
					98024701	L95					TPM0002		
			Luc		82055800		⊖ incr. payload →J342201 →2006-06-02				91032800	ø 164 x 20	
			Luc		82055900		⊕ incr. payload →J342201 →2006-06-02				97011600		
							J264311→ 2005-11-24→						
			Luc		82063300								
				PRO	92131803	ø 276 x 12.2 x 44.6	⊖ incr. payload →J342201 →2006-06-02						
				PRO	92131903	ø 276 x 22 x 44.7	⊕ incr. payload →J342201 →2006-06-02						
							J264311→ 2005-11-24→						
					TPM0002								
		375000	Luc		2407702	[o] 24077 19			Luc		2313805	[–] 23138 14.6	
A 170 (169.032, 169.332)	09/04→06/12	85 / 116											
A 180 (169.032, 169.332)	04/09→06/12	85 / 116											
A 180 CDI (169.007, 169.307)	09/04→06/12	80 / 109			98024701	L95			Luc		82060300		
A 200 (169.033, 169.333)	09/04→06/12	100 / 136	Luc		82055900					PRO	92132103	ø 258 x 8 x 57.2	
			Luc		82063300						TPM0002		
				PRO	92131903	ø 276 x 22 x 44.7					91032800	ø 164 x 20	
					TPM0002						97011600		
		375100	Luc		2388101	[o] 23881 20.1			Luc		2313805	[–] 23138 14.6	
A 200 CDI (169.008, 169.308)	09/04→06/12	103 / 140											
A 200 CDI (169.308)	09/04→06/12	100 / 136			98024701	L95			Luc		82060300		
A 200 TURBO (169.034, 169.334)	09/05→06/12	142 / 193	Luc		82054100					PRO	92132103	ø 258 x 8 x 57.2	
E-CELL	12/10→06/12	50 / 68	Luc		82063300						TPM0002		
				PRO	92132003	ø 288 x 25 x 44.4					91032800	ø 164 x 20	
					TPM0002						97011600		
A-CLASS (W176) 06/12→														
		375200	TRW		2486901	[o] 24869 19	⊕ sport pack. ⊕ AMG sport pack.		TRW		2484801	[o] 24848 18.4	
A 160 CDI (176.011)	06/13→	66 / 90	TRW		2532601	[o] 25326 19.2	⊖ sport pack. ⊖ AMG sport pack.			PRO	92241303	ø 276 x 9 x 44.2	
					98048700	L93					TPM0002		
				PRO	92257003	ø 280 x 25 x 51.2	⊖ sport pack. ⊖ AMG sport pack.						
				PRO	92257503	ø 295 x 28 x 51.2	⊕ sport pack. ⊕ AMG sport pack.						
					TPM0002								
		375300	TRW		2486901	[o] 24869 19	⊖ steel rim		TRW		2484801	[o] 24848 18.4	
A 180 (176.042)	06/12→	90 / 122	TRW		2532601	[o] 25326 19.2	⊖ AMG sport pack. ⊖ sport pack. ⊕ steel rim			PRO	92241303	ø 276 x 9 x 44.2	
					98048700	L93					TPM0002		
				PRO	92241603	ø 295 x 28 x 51.1	⊖ AMG sport pack. ⊖ sport pack. ⊖ steel rim						
				PRO	92257003	ø 280 x 25 x 51.2	⊖ AMG sport pack. ⊖ sport pack. ⊕ steel rim						
				PRO	92257503	ø 295 x 28 x 51.2	⊕ AMG sport pack. ⊕ sport pack.						
					TPM0002								
		375400	TRW		2486901	[o] 24869 19	⊕ AMG sport pack.		TRW		2484801	[o] 24848 18.4	
A 180 CDI (176.000)	06/12→	80 / 109	TRW		2532601	[o] 25326 19.2	⊖ AMG sport pack. ⊖ sport pack.			PRO	92241303	ø 276 x 9 x 44.2	
					98048700	L93					TPM0002		
				PRO	92257003	ø 280 x 25 x 51.2	⊖ AMG sport pack. ⊖ sport pack.						
				PRO	92257503	ø 295 x 28 x 51.2	⊕ AMG sport pack.						

		kW / hp										
A-CLASS (W176) 06/12→												
		375400		TPM0002								
A 180 CDI (176.000)	06/12→	80 / 109										
		375500	TRW	2486901	[o] 24869 19	⊕ AMG sport pack. ⊕ sport pack.	TRW	2484801	[o] 24848 18.4			
A 180 CDI (176.012)	06/12→	80 / 109	TRW	2532601	[o] 25326 19.2	⊖ AMG sport pack. ⊖ sport pack.		92241303	ø 276 x 9 x 44.2			
				98048700	L93			TPM0002				
				92257003	ø 280 x 25 x 51.2	⊖ AMG sport pack. ⊖ sport pack.						
				92257503	ø 295 x 28 x 51.2	⊕ AMG sport pack.						
				TPM0002								
		375600	TRW	2486901	[o] 24869 19		TRW	2484801	[o] 24848 18.4			
A 200 (176.043)	06/12→	115 / 156										
A 200 CDI (176.001)	06/12→	100 / 136		98048700	L93			92241303	ø 276 x 9 x 44.2			
A 200 CDI (176.008)	02/14→	100 / 136		92241603	ø 295 x 28 x 51.1	⊖ AMG sport pack. ⊖ sport pack.		TPM0002				
				92257503	ø 295 x 28 x 51.2	⊕ AMG sport pack. ⊕ sport pack.						
				TPM0002								
		375700	TRW	2486901	[o] 24869 19		TRW	2484801	[o] 24848 18.4			
A 200 CDI 4-matic (176.002)	02/14→	100 / 136		98048700	L93			92241303	ø 276 x 9 x 44.2			
				92241603	ø 295 x 28 x 51.1	⊖ sport pack. ⊖ AMG sport pack.		TPM0002				
				92257503	ø 295 x 28 x 51.2	⊕ sport pack. ⊕ AMG sport pack.						
				TPM0002								
		375800	TRW	2486901	[o] 24869 19			92254903	ø 295 x 10 x 42.7			
A 220 4-matic (176.047)	05/14→	135 / 184		98048700	L93			TPM0002				
				92254803	ø 295 x 28 x 51.1	⊖ AMG sport pack. ⊖ sport pack.						
				92257503	ø 295 x 28 x 51.2	⊕ sport pack.						
				92262103	ø 320 x 30 x 51	⊕ AMG sport pack. ⊕ sport pack.						
				TPM0002								
		375900	TRW	2486901	[o] 24869 19		TRW	2484801	[o] 24848 18.4			
A 220 CDI (176.003)	09/12→	125 / 170										
A 220 CDI (176.003)	01/14→	120 / 163		98048700	L93			92254903	ø 295 x 10 x 42.7			
				92254803	ø 295 x 28 x 51.1	⊖ AMG sport pack. ⊖ sport pack.		TPM0002				
				92257503	ø 295 x 28 x 51.2	⊕ sport pack.						
				92262103	ø 320 x 30 x 51	⊕ AMG sport pack. ⊕ sport pack.						
				TPM0002								
		376000	TRW	2486901	[o] 24869 19		TRW	2484801	[o] 24848 18.4			
A 220 CDI 4-matic (176.005)	09/12→	125 / 170		98048700	L93			92254903	ø 295 x 10 x 42.7			
				92254803	ø 295 x 28 x 51.1	⊖ sport pack. ⊖ AMG sport pack.		TPM0002				
				92257503	ø 295 x 28 x 51.2	⊕ USA						
				92262103	ø 320 x 30 x 51	⊕ sport pack. ⊕ AMG sport pack.						
				TPM0002								
		376100	TRW	2486901	[o] 24869 19		TRW	2484801	[o] 24848 18.4			
A 250 (176.044)	06/12→	155 / 211		98048700	L93			92254903	ø 295 x 10 x 42.7			
				92258003	ø 320 x 30 x 51.1	⊖ AMG sport pack. ⊖ sport pack.		TPM0002				
				92257503	ø 295 x 28 x 51.2	⊕ sport pack.						
				92262103	ø 320 x 30 x 51	⊕ AMG sport pack. ⊕ sport pack.						

		kW / hp											
A-CLASS (W176) 06/12→													
		376100			TPM0002								
A 250 (176.044)	06/12→	155 / 211											
		376200	TRW		2486901	[o] 24869 19		TRW		2484801	[o] 24848 18.4	⊖ USA	
A 250 4-matic (176.046)	06/12→	155 / 211			98048700	L93			PRO	92254903	ø 295 x 10 x 42.7		
				PRO	92257503	ø 295 x 28 x 51.2	⊕ sport pack.			TPM0002			
				PRO	92262103	ø 320 x 30 x 51	⊕ AMG sport pack. ⊕ sport pack.						
					TPM0002								
		376300			98048700	L93		TRW		2521501	[o] 25215 18.7		
A 45 AMG 4-matic (176.052)	06/13→	265 / 360			TPM0002					TPM0002			
A-KLASSE (W168) 07/97→08/04 → A-CLASS (W168), Page 571													
A-KLASSE (W169) 09/04→06/12 → A-CLASS (W169), Page 573													
A-KLASSE (W176) 06/12→ → A-CLASS (W176), Page 574													
B-CLASS (W245) 03/05→11/11													
		376400	Luc		2407702	[o] 24077 19		Luc		2313805	[–] 23138 14.6		
B 150 (245.231)	03/05→11/11	70 / 95											
B 160 (245.231)	04/09→11/11	70 / 95											
B 170 (245.232)	03/05→11/11	85 / 116	Luc		82055900			Luc		82060300			
B 180 (245.232)	04/09→11/11	85 / 116	Luc		82063300				PRO	92132103	ø 258 x 8 x 57.2		
				PRO	92131903	ø 276 x 22 x 44.7				TPM0002			
					TPM0002					91032800	ø 164 x 20		
										97011600			
		376500	Luc		2388101	[o] 23881 20.1		Luc		2313805	[–] 23138 14.6		
B 170 NGT (245.233)	04/08→11/11	85 / 116											
B 180 CDI (245.207)	03/05→11/11	80 / 109											
B 180 NGT (245.233)	04/08→11/11	85 / 116			98024701	L95		Luc		82060300			
B 200 (245.233)	03/05→11/11	100 / 136	Luc		82054100				PRO	92132103	ø 258 x 8 x 57.2		
B 200 CDI	03/05→11/11	100 / 136	Luc		82063300					TPM0002			
B 200 CDI (245.208)	03/05→11/11	103 / 140											
B 200 TURBO (245.234)	03/05→11/11	142 / 193		PRO	92132003	ø 288 x 25 x 44.4				91032800	ø 164 x 20		
					TPM0002					97011600			
		376600	Luc		2388101	[o] 23881 20.1		Luc		2313805	[–] 23138 14.6		
B 200	03/05→11/11	155 / 211											
					98024701	L95			PRO	92132103	ø 258 x 8 x 57.2		
				PRO	92132003	ø 288 x 25 x 44.4				TPM0002			
					TPM0002					91032800	ø 164 x 20		
B-CLASS (W246) 11/11→													
		376700	TRW		2486901	[o] 24869 19	⊕ sport pack. ⊕ AMG sport pack.	TRW		2484801	[o] 24848 18.4		
B 160 CDI (246.211)	05/13→	66 / 90											
B 180 (246.242)	11/11→	90 / 122	TRW		2532601	[o] 25326 19.2	⊖ sport pack. ⊖ AMG sport pack.		PRO	92241303	ø 276 x 9 x 44.2		
B 180 CDI (246.200)	11/11→	80 / 109											
B 180 CDI (246.212)	02/13→	80 / 109			98048700	L93				TPM0002			
B 200 (246.243)	11/11→	115 / 156		PRO	92257003	ø 280 x 25 x 51.2	⊖ sport pack. ⊖ AMG sport pack.						
				PRO	92257503	ø 295 x 28 x 51.2	⊕ sport pack. ⊕ AMG sport pack.						
					TPM0002								
		376800	TRW		2486901	[o] 24869 19	⊕ police veh.	TRW		2484801	[o] 24848 18.4	⊖ police veh.	
B 180 CDI	07/14→	80 / 109	TRW		2532601	[o] 25326 19.2	⊖ AMG sport pack. ⊖ sport pack. ⊖ police veh.		PRO	92241303	ø 276 x 9 x 44.2	⊕ police veh.	
					98048700	L93			PRO	92254903	ø 295 x 10 x 42.7	⊖ police veh.	
				PRO	92254803	ø 295 x 28 x 51.1	⊖ AMG sport pack. ⊖ sport pack. ⊕ police veh.			TPM0002			
				PRO	92257003	ø 280 x 25 x 51.2	⊖ AMG sport pack. ⊖ sport pack. ⊖ police veh.						
				PRO	92257503	ø 295 x 28 x 51.2	⊕ AMG sport pack. ⊕ sport pack.						

		kW / hp										
B-CLASS (W246) 11/11→												
B 180 CDI	07/14→	376800 80 / 109		TPM0002								
B 200 CDI (246.201)	11/11→	376900 100 / 136	TRW	2486901	[o] 24869 19	⊕ sport pack. ⊕ AMG sport pack.	TRW	2484801	[o] 24848 18.4			
			TRW	2532601	[o] 25326 19.2	⊖ sport pack. ⊖ AMG sport pack.		PRO 92241303	ø 276 x 9 x 44.2			
				98048700	L93			TPM0002				
				PRO 92241603	ø 295 x 28 x 51.1	⊖ AMG sport pack. ⊖ sport pack.						
				PRO 92257503	ø 295 x 28 x 51.2	⊕ sport pack. ⊕ AMG sport pack.						
				TPM0002								
B 200 CDI (246.208)	08/14→	377000 100 / 136	TRW	2486901	[o] 24869 19		TRW	2484801	[o] 24848 18.4	⊖ police veh.		
				98048700	L93			PRO 92241303	ø 276 x 9 x 44.2	⊖ police veh.		
				PRO 92241603	ø 295 x 28 x 51.1	⊖ AMG sport pack. ⊖ sport pack. ⊖ police veh.		PRO 92254903	ø 295 x 10 x 42.7	⊕ police veh.		
				PRO 92254803	ø 295 x 28 x 51.1	⊖ AMG sport pack. ⊖ sport pack. ⊕ police veh.		TPM0002				
				PRO 92262103	ø 320 x 30 x 51	⊕ AMG sport pack. ⊕ sport pack.						
				TPM0002								
B 200 CDI 4-matic (246.202)	08/14→	377100 100 / 136	TRW	2486901	[o] 24869 19		TRW	2484801	[o] 24848 18.4	⊖ police veh.		
				98048700	L93			PRO 92254903	ø 295 x 10 x 42.7			
				PRO 92241603	ø 295 x 28 x 51.1	⊖ AMG sport pack. ⊖ sport pack. ⊖ police veh.		TPM0002				
				PRO 92254803	ø 295 x 28 x 51.1	⊖ AMG sport pack. ⊖ sport pack. ⊕ police veh.						
				PRO 92262103	ø 320 x 30 x 51	⊕ AMG sport pack. ⊕ sport pack.						
				TPM0002								
B 200 Natural Gas Drive (242.848)	11/12→	377200 115 / 156	TRW	2486901	[o] 24869 19		TRW	2484801	[o] 24848 18.4			
				98048700	L93			PRO 92241303	ø 276 x 9 x 44.2			
				PRO 92241603	ø 295 x 28 x 51.1	⊖ sport pack. ⊖ AMG sport pack.		TPM0002				
				PRO 92257503	ø 295 x 28 x 51.2	⊕ sport pack. ⊕ AMG sport pack.						
				TPM0002								
B 220 4-matic (246.247)	05/13→	377300 135 / 184	TRW	2486901	[o] 24869 19		TRW	2484801	[o] 24848 18.4			
B 220 CDI (246.203)	11/11→	125 / 170		98048700	L93			PRO 92254903	ø 295 x 10 x 42.7			
B 220 CDI (246.203)	06/13→	120 / 163		PRO 92254803	ø 295 x 28 x 51.1	⊖ AMG sport pack. ⊖ sport pack.		TPM0002				
B 220 CDI (246.203)	09/14→	130 / 177		PRO 92262103	ø 320 x 30 x 51	⊕ AMG sport pack. ⊕ sport pack.						
B 220 CDI 4-matic (246.205)	09/14→	130 / 177		TPM0002								
B 250 (246.244)	05/12→	377400 155 / 211	TRW	2486901	[o] 24869 19	⊖ USA ⊖ sport pack. ⊖ AMG perf. pack.	TRW	2484801	[o] 24848 18.4	⊖ USA		
				98048700	L93			PRO 92254903	ø 295 x 10 x 42.7	⊖ USA		
				PRO 92258003	ø 320 x 30 x 51.1	⊖ USA ⊖ sport pack. ⊖ AMG perf. pack.		TPM0002				
				PRO 92262103	ø 320 x 30 x 51	⊕ sport pack. ⊕ AMG perf. pack.						
				TPM0002								
B 250 4-matic (246.246)	08/14→	377500 155 / 211	TRW	2486901	[o] 24869 19			PRO 92254903	ø 295 x 10 x 42.7			
				98048700	L93			TPM0002				
				PRO 92262103	ø 320 x 30 x 51							
				TPM0002								

B-KLASSE (W245) 03/05→11/11 → B-CLASS (W245), Page 576

B-KLASSE (W246) 11/11→ → B-CLASS (W246), Page 576

C-CLASS (W202) 03/93→05/00

		kW / hp												
		377600	Luc		2143905	[o] 21439 20.3		Ate		2068701	[–] 20687 15.5	cal. + 2 holding pins →A419828/F443892
C 180 (202.018)	03/93→05/00	90 / 122			98021300	L90		Ate		2190003	[–] 21900 15.8	cal. + 1 holding pin A419829/F443893→
C 180 (202.018)	11/94→05/00	89 / 121	Luc		82062800			Ate		82019500		cal. + 2 holding pins →A419828/F443892
C 200 D (202.120)	03/93→05/00	55 / 75		PRO	92059303	ø 284 x 12 x 43.5		Ate		82032800		cal. + 2 holding pins A419829/F443893→
C 200 D (202.122)	10/96→05/00	65 / 88			TPM0001			Ate		82058800		cal. + 1 holding pin A419829/F443893→
C 220 D	07/96→05/00	55 / 75							PRO	92059503	ø 258 x 9 x 55.4	
C 220 D (202.121)	08/93→05/00	70 / 95								TPM0001		
C 250 D (202.125)	05/93→05/00	83 / 113								91032800	ø 164 x 20	
										97011600		
		377700	Luc		2143905	[o] 21439 20.3		Ate		2068701	[–] 20687 15.5	cal. + 2 holding pins →A419828/F443892
C 200 (202.020)	01/94→05/00	100 / 136			98021300	L90		Ate		2190003	[–] 21900 15.8	cal. + 1 holding pin A419829/F443893→
C 220 (202.022)	03/93→05/00	110 / 150	Luc		82062800			Ate		82019500		cal. + 2 holding pins →A419828/F443892
				PRO	92059403	ø 284 x 22 x 43.5		Ate		82032800		cal. + 2 holding pins A419829/F443893→
					TPM0001			Ate		82058800		cal. + 1 holding pin A419829/F443893→
									PRO	92059503	ø 258 x 9 x 55.4	
										TPM0001		
										91032800	ø 164 x 20	
										97011600		
		377800	Luc		2143905	[o] 21439 20.3		Ate		2190003	[–] 21900 15.8	
C 200 CDI (202.134)	03/98→05/00	75 / 102			98021300	L90		Ate		82058800		
C 220 CDI (202.133)	09/97→05/00	92 / 125	Luc		82062800				PRO	92059503	ø 258 x 9 x 55.4	
				PRO	92059403	ø 284 x 22 x 43.5				TPM0001		
					TPM0001					91032800	ø 164 x 20	
										97011600		
		377900	Ate		2166404	[o] 21664 19.8		Ate		2191903	[–] 21919 15.7	cal. + 1 holding pin A487048/F576241→
C 200 Kompressor (202.025)	10/95→05/00	132 / 180										
C 200 Kompressor (202.025)	11/96→05/00	141 / 192	Ate	epad	2166481	[o] 21664 19.8		Ate		2119701	[o] 21197 15	cal. + 2 holding pins →A487047/F576240
C 230 Kompressor (202.024)	10/95→05/00	142 / 193			98021300	L90		Ate		82019500		cal. + 2 holding pins →A487047/F576240
C 240 (202.026)	06/97→05/00	125 / 170	Ate		82032000			Ate		82058800		cal. + 1 holding pin A487048/F576241→
C 250 Turbo-D (202.128)	10/95→05/00	110 / 150	Ate		82062900				PRO	92032703	ø 278 x 9 x 53.5	
C 280 (202.029)	06/97→05/00	145 / 197		PRO	92105903	ø 288 x 25 x 46.5				TPM0001		
					TPM0001					91032800	ø 164 x 20	
										97011600		
		378000	Luc		2143905	[o] 21439 20.3		Ate		2190003	[–] 21900 15.8	
C 230	09/98→05/00	138 / 188		PRO	92059303	ø 284 x 12 x 43.5			PRO	92059503	ø 258 x 9 x 55.4	
				PRO	92059403	ø 284 x 22 x 43.5				TPM0001		
					TPM0001					91032800	ø 164 x 20	
		378100	Luc		2143905	[o] 21439 20.3	→A344660/F331440	Ate		2068701	[–] 20687 15.5	cal. + 2 holding pins →A344660/F331440
C 280 (202.028)	05/93→05/00	142 / 193	Ate		2166404	[o] 21664 19.8	A344661/F331441→	Ate		2119701	[o] 21197 15	cal. + 2 holding pins A344661/F331441→
			Ate	epad	2166481	[o] 21664 19.8	A344661/F331441→	Ate		2130103	[o] 21301 15.5	⊕ ASR
					98021300	L90		Ate		82019500		cal. + 2 holding pins

→

30 kW / hp

C-CLASS (W202) 03/93→05/00

378100														
C 280 (202.028)	05/93→05/00	142 / 193	Ate		82032000		A344661/F331441→			PRO	92032703	ø 278 x 9 x 53.5	A344661/F331441→
			Luc		82062800		→A344660/F331440			PRO	92059503	ø 258 x 9 x 55.4	→A344660/F331440
			Ate		82062900		A344661/F331441→				TPM0001		
				PRO	92059403	ø 284 x 22 x 43.5	→A344660/F331440				91032800	ø 164 x 20	
				PRO	92105903	ø 288 x 25 x 46.5	A344661/F331441→				97011600		
					TPM0001								
378200														
C 36 AMG (202.028)	05/94→05/00	206 / 280	Ate		2115307	[o] 21153 17.5		Ate		Ate	2119701	[o] 21197 15	cal. + 2 holding pins →A344660/F331440
			Ate		82500500			Ate		Ate	2130503	[o] 21305 16	A344661/F331441→
			Ate		82032000			Ate		Ate	2130581	[o] 21305 15.5	A344661/F331441→
			Ate		82062900			Ate		Ate	82019500		cal. + 2 holding pins →A344660/F331440
				PRO	92059403	ø 284 x 22 x 43.5	→A 344660, F 331440 ⊖ AMG sport pack.			PRO	92072703	ø 290 x 10 x 55.2	A 344661→ F 331441→ ⊕ AMG sport pack.
					TPM0001						92060100	ø 278 x 24 x 55.5	→A 344660, F 331440 ⊕ AMG sport pack.
											TPM0001		
											91032800	ø 164 x 20	
											97011600		
378300														
C 43 AMG (202.033)	08/97→05/00	225 / 306	Ate		2148401	[o] 21484 20.8		Ate		Ate	2130503	[o] 21305 16	
			Ate		82059200			Ate		Ate	2130581	[o] 21305 15.5	
			Ate		82062900						98021300	L90	
					TPM0001						98021301	L90	
										PRO	92137203	ø 300 x 22 x 53.6	
											TPM0001		
											91032800	ø 164 x 20	
											97011600		

C-CLASS (W203) 05/00→02/07

378400														
3.5	01/05→02/07	170 / 231	Luc		2314402	[o] 23144 19.8	⊖ sport pack. ⊖ AMG sport pack. ⊕ J ⊕ USA ⊕ AUS	Ate		Ate	2189803	[o] 21898 15.7	
C 350 (203.056)	01/05→02/07	200 / 272	Luc		2314482	[o] 23144 19.8	⊖ sport pack. ⊖ AMG sport pack. ⊕ J ⊕ USA ⊕ AUS	Ate		Ate	2189881	[o] 21898 15.7	
			Bre		2374502	[o] 23745 17.7	⊕ sport pack. ⊕ AMG sport pack.	Ate		Ate	82501300		
			Bre		2374581	[o] 23745 17.7	⊕ sport pack. ⊕ AMG sport pack.			PRO	92072703	ø 290 x 10 x 55.2	
			Bre		2394501	[o] 23945 16.5	⊖ sport pack. ⊖ AMG sport pack. ⊖ J ⊖ USA ⊖ AUS				TPM0002		
					98024701	L95					91057100	ø 164 x 20	
			Gir		82059500		⊖ sport pack. ⊖ AMG sport pack. ⊕ J ⊕ USA ⊕ AUS				97034500		
			Bre		82075200		⊕ sport pack. ⊕ AMG sport pack.						
			Bre		82504700		⊕ sport pack. ⊕ AMG sport pack.						
			Luc		82063500		⊕ J ⊕ USA ⊕ AUS						
					92151000	ø 330 x 28 x 46.5	⊖ sport pack. ⊖ AMG sport pack.						
				PRO	92106003	ø 300 x 28 x 46.5	⊖ sport pack. ⊖ AMG sport pack. ⊕ J ⊕ USA ⊕ AUS						
				PRO	92106005	ø 300 x 28 x 46.5	⊖ sport pack. ⊖ AMG sport pack. ⊕ J ⊕ USA ⊕ AUS						
				PRO	92151003	ø 330 x 28 x 46.5	⊖ sport pack. ⊖ AMG sport pack.						
				PRO	92123703	ø 345 x 30 x 46.5	⊕ sport pack. ⊕ AMG sport pack.						
					TPM0002								

I - M

kW / hp

C-CLASS (W203) 05/00→02/07

378500															
C 180 (203.035)	10/00→05/02	95 / 129	Luc		2314401	[o] 23144	19.8		Ate		2191901	[–] 21919	15.3		
C 200 Kompressor (203.045)	05/00→06/02	120 / 163	Luc	epad	2314481	[o] 23144	19.8		Ate	epad	2191981	[–] 21919	15.3		
					98024701	L95			Ate		82500000				
			Luc		82055400					PRO	92032703	ø 278 x 9 x 53.5			
			Luc		82063500						TPM0002				
				PRO	92105903	ø 288 x 25 x 46.5					91057100	ø 164 x 20			
					TPM0002						97034500				
378600															
C 180 Kompressor (203.046)	05/02→02/07	105 / 143	Luc		2314401	[o] 23144	19.8	⊖ sport pack. ⊖ AMG sport pack.	Ate		2191901	[–] 21919	15.3	⊖ sport pack. ⊖ AMG sport pack.	
C 200 CDI (203.007)	04/03→02/07	90 / 122	Luc	epad	2314481	[o] 23144	19.8	⊖ sport pack. ⊖ AMG sport pack.	Ate	epad	2191981	[–] 21919	15.3	⊖ sport pack. ⊖ AMG sport pack.	
C 200 CGI Kompressor (203.043)	07/03→02/07	125 / 170													
C 200 Kompressor (203.042)	05/02→02/07	120 / 163	Bre		2374502	[o] 23745	17.7	⊖ J →A660226 →F565688 →R138317 ⊕ sport pack. ⊕ AMG sport pack.	Ate		2189803	[o] 21898	15.7	⊕ sport pack. ⊕ AMG sport pack.	
C 230 Kompressor (203.040)	02/04→02/07	141 / 192						⊕ J →F583910 →F150814 ⊕ sport pack. ⊕ AMG sport pack.	Ate	epad	2189881	[o] 21898	15.7	⊕ sport pack. ⊕ AMG sport pack.	
			Bre	epad	2374581	[o] 23745	17.7	⊖ J →A660226 →F565688 →R138317 ⊕ sport pack. ⊕ AMG sport pack.	Ate		82500000			⊖ sport pack. ⊖ AMG sport pack.	
								⊕ J →F583910 →F150814 ⊕ sport pack. ⊕ AMG sport pack.	Ate		82501300			⊕ sport pack. ⊕ AMG sport pack.	
			Bre		2394501	[o] 23945	16.5	⊖ J A660227→ F565689→ R138318→ ⊕ sport pack. ⊕ AMG sport pack.		PRO	92032703	ø 278 x 9 x 53.5		⊖ sport pack. ⊖ AMG sport pack.	
								⊕ J F583911→ R150815→ ⊕ sport pack. ⊕ AMG sport pack.		PRO	92072703	ø 290 x 10 x 55.2		⊕ sport pack. ⊕ AMG sport pack.	
					98024701	L95					TPM0002				
			Luc		82055400			⊖ sport pack. ⊖ AMG sport pack.			91057100	ø 164 x 20			
			Bre		82075200			⊕ sport pack. ⊕ AMG sport pack.			97034500				
			Bre		82504700			⊖ J →A660226 →F565688 →R138317 ⊕ sport pack. ⊕ AMG sport pack.							
								⊕ J →F583910 →F150814 ⊕ sport pack. ⊕ AMG sport pack.							
			Luc		82063500			⊖ sport pack. ⊖ AMG sport pack.							
				PRO	92105903	ø 288 x 25 x 46.5		⊖ sport pack. ⊖ AMG sport pack.							
				PRO	92119803	ø 330 x 28 x 46.5		⊕ sport pack. ⊕ AMG sport pack.							
					TPM0002										
378700															
C 200 CDI	02/01→02/07	75 / 102	Luc		2314401	[o] 23144	19.8	⊖ sport pack. ⊖ AMG sport pack.	Ate		2191901	[–] 21919	15.3	⊖ sport pack. ⊖ AMG sport pack.	
C 200 CDI (203.004)	09/00→02/07	85 / 116	Luc	epad	2314481	[o] 23144	19.8	⊖ sport pack. ⊖ AMG sport pack.	Ate	epad	2191981	[–] 21919	15.3	⊖ sport pack. ⊖ AMG sport pack.	
C 220 CDI (203.006)	05/00→02/07	100 / 136	Bre		2374502	[o] 23745	17.7	⊕ sport pack. ⊕ AMG sport pack.	Ate		2189803	[o] 21898	15.7	⊕ sport pack. ⊕ AMG sport pack.	
C 220 CDI (203.006)	05/00→02/07	105 / 143	Bre	epad	2374581	[o] 23745	17.7	⊕ sport pack. ⊕ AMG sport pack.	Ate	epad	2189881	[o] 21898	15.7	⊕ sport pack. ⊕ AMG sport pack.	
					98024701	L95			Ate		82500000			⊖ sport pack. ⊖ AMG sport pack.	
			Luc		82055400			⊖ sport pack. ⊖ AMG sport pack.	Ate		82501300			⊕ sport pack. ⊕ AMG sport pack.	
			Bre		82075200			⊕ sport pack. ⊕ AMG sport pack.		PRO	92032703	ø 278 x 9 x 53.5		⊖ sport pack. ⊖ AMG sport pack.	
			Bre		82504700			⊕ sport pack. ⊕ AMG sport pack.		PRO	92072703	ø 290 x 10 x 55.2		⊕ sport pack. ⊕ AMG sport pack.	
			Luc		82063500			⊖ sport pack. ⊖ AMG sport pack.			TPM0002				
				PRO	92105903	ø 288 x 25 x 46.5		⊖ sport pack. ⊖ AMG sport pack.			91057100	ø 164 x 20			
				PRO	92119803	ø 330 x 28 x 46.5		⊕ sport pack. ⊕ AMG sport pack.			97034500				
					TPM0002										
378800															
C 220 CDI (203.008)	02/03→02/07	110 / 150	Luc		2314401	[o] 23144	19.8	⊖ sport pack. ⊖ AMG sport pack.	Ate		2191901	[–] 21919	15.3	⊖ sport pack. ⊖ AMG sport pack.	
			Luc	epad	2314481	[o] 23144	19.8	⊖ sport pack. ⊖ AMG sport pack.	Ate	epad	2191981	[–] 21919	15.3	⊖ sport pack. ⊖ AMG sport pack.	
									Ate		2189803	[o] 21898	15.7	⊕ sport pack. ⊕ AMG sport pack.	

C-CLASS (W203) 05/00→02/07

C 220 CDI (203.008) 02/03→02/07 110 / 150	378900	Bre		2374502	[o] 23745 17.7	⊖ J →A660226 →F565688 →R138317 ⊕ sport pack. ⊕ AMG sport pack.	Ate		2189881	[o] 21898 15.7	⊕ sport pack. ⊕ AMG sport pack.
						⊕ J →F583910 →F150814 ⊕ sport pack. ⊕ AMG sport pack.	Ate		82500000		⊖ sport pack. ⊖ AMG sport pack.
		Bre		2374581	[o] 23745 17.7	⊖ J →A660226 →F565688 →R138317 ⊕ sport pack. ⊕ AMG sport pack.	Ate		82501300		⊕ sport pack. ⊕ AMG sport pack.
						⊕ J →F583910 →F150814 ⊕ sport pack. ⊕ AMG sport pack.			92032703	ø 278 x 9 x 53.5	⊖ sport pack. ⊖ AMG sport pack.
		Bre		2394501	[o] 23945 16.5	⊖ J A660227→ F565689→ R138318→ ⊕ sport pack. ⊕ AMG sport pack.			92072703	ø 290 x 10 x 55.2	⊕ sport pack. ⊕ AMG sport pack.
						⊕ J F583911→ R150815→ ⊕ sport pack. ⊕ AMG sport pack.			TPM0002		
				98024701	L95				91057100	ø 164 x 20	
		Luc		82055400		⊖ sport pack. ⊖ AMG sport pack.			97034500		
		Bre		82504700		⊖ J →A660226 →F565688 →R138317 ⊕ sport pack. ⊕ AMG sport pack.					
						⊕ J →F583910 →F150814 ⊕ sport pack. ⊕ AMG sport pack.					
		Luc		82063500		⊖ sport pack. ⊖ AMG sport pack.					
				92105903	ø 288 x 25 x 46.5	⊖ sport pack. ⊖ AMG sport pack.					
				92119803	ø 330 x 28 x 46.5	⊕ sport pack. ⊕ AMG sport pack.					
				TPM0002							
C 230 (203.052) 01/05→02/07 150 / 204	378900	Luc		2314401	[o] 23144 19.8	⊕ J ⊕ USA ⊕ AUS ⊖ sport pack. ⊖ AMG sport pack.	Ate		2189803	[o] 21898 15.7	
		Luc		2314402	[o] 23144 19.8	⊖ J ⊖ USA ⊖ AUS ⊖ sport pack. ⊖ AMG sport pack.	Ate		2189881	[o] 21898 15.7	
		Luc		2314481	[o] 23144 19.8	⊕ J ⊕ USA ⊕ AUS ⊖ sport pack. ⊖ AMG sport pack.	Ate		82501300		
		Luc		2314482	[o] 23144 19.8	⊖ J ⊖ USA ⊖ AUS ⊖ sport pack. ⊖ AMG sport pack.			92032703	ø 278 x 9 x 53.5	⊕ J ⊕ USA ⊕ AUS
		Bre		2394501	[o] 23945 16.5	⊕ sport pack. ⊕ AMG sport pack.			92072703	ø 290 x 10 x 55.2	⊖ J ⊖ USA ⊖ AUS
				98024701	L95				TPM0002		
		Luc		82055400		⊕ J ⊕ USA ⊕ AUS ⊖ sport pack. ⊖ AMG sport pack.			91057100	ø 164 x 20	
		Gir		82059500		⊖ J ⊖ USA ⊖ AUS ⊖ sport pack. ⊖ AMG sport pack.			97034500		
		Bre		82075200		⊕ sport pack. ⊕ AMG sport pack.					
		Luc		82063500		⊖ sport pack. ⊖ AMG sport pack.					
				92105903	ø 288 x 25 x 46.5	⊕ J ⊕ USA ⊕ AUS ⊖ sport pack. ⊖ AMG sport pack.					
				92106003	ø 300 x 28 x 46.5	⊖ J ⊖ USA ⊖ AUS ⊖ sport pack. ⊖ AMG sport pack.					
				92106005	ø 300 x 28 x 46.5	⊖ J ⊖ USA ⊖ AUS ⊖ sport pack. ⊖ AMG sport pack.					
				92119803	ø 330 x 28 x 46.5	⊕ sport pack. ⊕ AMG sport pack.					
				TPM0002							
C 240 (203.061) 05/00→02/07 125 / 170	379000	Luc		2314401	[o] 23144 19.8	⊕ USA ⊖ sport pack. ⊖ AMG sport pack.	Ate		2191901	[–] 21919 15.3	
						⊕ J ⊕ AUS →A042378 →F029111 →R012850 ⊖ sport pack. ⊖ AMG sport pack.	Ate		2191981	[–] 21919 15.3	
		Luc		2314402	[o] 23144 19.8	⊖ sport pack. ⊖ AMG sport pack. ⊖ USA	Ate		2189803	[o] 21898 15.7	⊕ sports susp.
						⊕ J ⊕ AUS A199326→ R150420→ R033012→ ⊖ sport pack. ⊖ AMG sport pack.	Ate		2189881	[o] 21898 15.7	⊕ sports susp.
		Luc		2314481	[o] 23144 19.8	⊕ USA ⊖ sport pack. ⊖ AMG sport pack.	Ate		82500000		
						⊕ J ⊕ AUS →A042378 →F029111 →R012850 ⊖ sport pack. ⊖ AMG sport pack.	Ate		82501300		⊕ sports susp.
		Luc		2314482	[o] 23144 19.8	⊖ sport pack. ⊖ AMG sport pack. ⊖ USA			92032703	ø 278 x 9 x 53.5	⊕ USA
						⊕ J ⊕ AUS A199326→ R150420→ R033012→ ⊖ sport pack. ⊖ AMG sport pack.					⊕ J ⊕ AUS F029111→ R012850→ ⊖ sport pack. ⊖ AMG sport pack.
									92072703	ø 290 x 10 x 55.2	⊖ USA
		Bre		2374502	[o] 23745 17.7	⊖ J →F565688 ⊕ sport pack. ⊕ AMG sport pack.					⊕ J ⊕ AUS →F150420 →R023901 ⊖ sport pack. ⊖ AMG sport pack.
						⊕ J →F583910 ⊕ sport pack. ⊕ AMG sport pack.					⊕ J ⊕ AUS ⊕ sport pack. ⊕ AMG sport pack.

kW / hp

C-CLASS (W203) 05/00→02/07

		379000	Bre	epad	2374581	[o] 23745 17.7	⊖ J →F565688 ⊕ sport pack. ⊕ AMG sport pack.				TPM0002		
C 240 (203.061)	05/00→02/07	125 / 170					⊕ J →F583910 ⊕ sport pack. ⊕ AMG sport pack.				91057100	ø 164 x 20	
			Bre		2394501	[o] 23945 16.5	⊖ J F565689→ ⊕ sport pack. ⊕ AMG sport pack.				97034500		
							⊕ J F583911→ ⊕ sport pack. ⊕ AMG sport pack.						
					98024701	L95							
			Luc		82055400		⊕ USA ⊖ sport pack. ⊖ AMG sport pack.						
							⊕ J ⊕ AUS →A042378 →F029111 →R012850 ⊖ sport pack. ⊖ AMG sport pack.						
			Gir		82059500		⊖ sport pack. ⊖ AMG sport pack. ⊖ USA						
							⊕ J ⊕ AUS A199326→ R150420→ R033012→ ⊖ sport pack. ⊖ AMG sport pack.						
			Bre		82075200		⊕ sport pack. ⊕ AMG sport pack.						
			Bre		82504700		⊖ J →F565688 ⊕ sport pack. ⊕ AMG sport pack.						
							⊕ J →F583910 ⊕ sport pack. ⊕ AMG sport pack.						
			Luc		82063500		⊖ sport pack. ⊖ AMG sport pack.						
				PRO	92106003	ø 300 x 28 x 46.5	⊖ sport pack. ⊖ AMG sport pack.						
				PRO	92106005	ø 300 x 28 x 46.5	⊖ sport pack. ⊖ AMG sport pack.						
				PRO	92119803	ø 330 x 28 x 46.5	⊕ sport pack. ⊕ AMG sport pack.						
					TPM0002								
		379100	Luc		2314402	[o] 23144 19.8		Ate		2189803	[o] 21898 15.7		
C 240 4-matic (203.081)	07/02→02/07	125 / 170											
C 320 4-matic (203.084)	07/02→02/07	160 / 218	Luc	epad	2314482	[o] 23144 19.8		Ate	epad	2189881	[o] 21898 15.7		
					98024701	L95		Ate		82501300			
			Gir		82059500				PRO	92032703	ø 278 x 9 x 53.5		
			Luc		82063500					TPM0002			
				PRO	92106003	ø 300 x 28 x 46.5				91057100	ø 164 x 20		
				PRO	92106005	ø 300 x 28 x 46.5				97034500			
					TPM0002								
		379200	Luc		2314402	[o] 23144 19.8	⊖ sport pack. ⊖ AMG sport pack.	Ate		2189803	[o] 21898 15.7		
C 270 CDI (203.016)	12/00→02/07	125 / 170											
C 320 (203.064)	05/00→02/07	160 / 218	Luc	epad	2314482	[o] 23144 19.8	⊖ sport pack. ⊖ AMG sport pack.	Ate	epad	2189881	[o] 21898 15.7		
			Bre		2374502	[o] 23745 17.7	⊖ J →A660226 →F565688 →R138317 ⊕ sport pack. ⊕ AMG sport pack.	Ate		82501300			
							⊕ J →F583910 →F150814 ⊕ sport pack. ⊕ AMG sport pack.		PRO	92072703	ø 290 x 10 x 55.2		
			Bre	epad	2374581	[o] 23745 17.7	⊖ J →A660226 →F565688 →R138317 ⊕ sport pack. ⊕ AMG sport pack.			TPM0002			
							⊕ J →F583910 →F150814 ⊕ sport pack. ⊕ AMG sport pack.			91057100	ø 164 x 20		
			Bre		2394501	[o] 23945 16.5	⊖ J A660227→ F565689→ R138318→ ⊕ sport pack. ⊕ AMG sport pack.			97034500			
							⊕ J F583911→ R150815→ ⊕ sport pack. ⊕ AMG sport pack.						
					98024701	L95							
			Gir		82059500		⊖ sport pack. ⊖ AMG sport pack.						
			Bre		82075200		⊕ sport pack. ⊕ AMG sport pack.						
			Bre		82504700		⊖ J →A660226 →F565688 →R138317 ⊕ sport pack. ⊕ AMG sport pack.						
							⊕ J →F583910 →F150814 ⊕ sport pack. ⊕ AMG sport pack.						
			Luc		82063500		⊖ sport pack. ⊖ AMG sport pack.						
				PRO	92106003	ø 300 x 28 x 46.5	⊖ sport pack. ⊖ AMG sport pack.						

C-CLASS (W203) 05/00→02/07

379200															
C 270 CDI (203.016)	12/00→02/07	125 / 170		PRO	92106005	ø 300 x 28 x 46.5	⊖ sport pack. ⊖ AMG sport pack.							
C 320 (203.064)	05/00→02/07	160 / 218		PRO	92119803	ø 330 x 28 x 46.5	⊕ sport pack. ⊕ AMG sport pack.							
					TPM0002									
379300			Luc		2314402	[o] 23144 19.8	⊖ sport pack. ⊖ AMG sport pack.	Ate		2189803	[o] 21898 15.7	
C 280 (203.054)	01/05→02/07	170 / 231										
C 280 4-matic (203.092)	01/05→02/07	170 / 231	Luc	epad	2314482	[o] 23144 19.8	⊖ sport pack. ⊖ AMG sport pack.	Ate	epad	2189881	[o] 21898 15.7	
			Bre		2394501	[o] 23945 16.5	⊕ sport pack. ⊕ AMG sport pack.	Ate		82501300		
					98024701	L95			PRO	92072703	ø 290 x 10 x 55.2	
			Gir		82059500		⊖ sport pack. ⊖ AMG sport pack.			TPM0002		
			Bre		82075200		⊕ sport pack. ⊕ AMG sport pack.			91057100	ø 164 x 20	
			Luc		82063500		⊖ sport pack. ⊖ AMG sport pack.			97034500		
				PRO	92106003	ø 300 x 28 x 46.5						
				PRO	92106005	ø 300 x 28 x 46.5						
					TPM0002							
379400			Bre		2374502	[o] 23745 17.7		Ate		2130503	[o] 21305 16	
C 30 CDI AMG (203.018)	01/03→02/07	170 / 231										
			Bre	epad	2374581	[o] 23745 17.7		Ate	epad	2130581	[o] 21305 15.5	
					98024701	L95			PRO	92137203	ø 300 x 22 x 53.6	
			Bre		82075200					TPM0002		
				PRO	92123703	ø 345 x 30 x 46.5				91057100	ø 164 x 20	
					TPM0002					97034500		
379500			Bre		2374502	[o] 23745 17.7	⊕ sport pack. ⊕ AMG sport pack.	Ate		2189803	[o] 21898 15.7	
C 320 CDI (203.020)	01/05→02/07	165 / 224										
			Bre	epad	2374581	[o] 23745 17.7	⊕ sport pack. ⊕ AMG sport pack.	Ate	epad	2189881	[o] 21898 15.7	
			Bre		2394501	[o] 23945 16.5	⊖ sport pack. ⊖ AMG sport pack.	Ate		82501300		
					98024701	L95			PRO	92072703	ø 290 x 10 x 55.2	
			Bre		82075200		⊖ sport pack. ⊖ AMG sport pack.			TPM0002		
			Bre		82504700		⊕ sport pack. ⊕ AMG sport pack.			91057100	ø 164 x 20	
					92151000	ø 330 x 28 x 46.5	⊖ sport pack. ⊖ AMG sport pack.			97034500		
				PRO	92151003	ø 330 x 28 x 46.5	⊖ sport pack. ⊖ AMG sport pack.					
				PRO	92123703	ø 345 x 30 x 46.5	⊕ sport pack. ⊕ AMG sport pack.					
					TPM0002							
379600			Luc		2314402	[o] 23144 19.8	⊖ AMG sport pack. ⊖ sport pack.	Ate		2189803	[o] 21898 15.7	
C 320 FLEX	09/03→12/05	160 / 218										
			Luc	epad	2314482	[o] 23144 19.8	⊖ AMG sport pack. ⊖ sport pack.	Ate	epad	2189881	[o] 21898 15.7	
			Bre		2374502	[o] 23745 17.7	⊕ AMG sport pack. ⊕ sport pack. →2004-05			98024701	L95	
			Bre	epad	2374581	[o] 23745 17.7	⊕ AMG sport pack. ⊕ sport pack. →2004-05		PRO	92072703	ø 290 x 10 x 55.2	
			Bre		2394501	[o] 23945 16.5	⊕ AMG sport pack. ⊕ sport pack. 2004-05→			TPM0002		
					98024701	L95				91057100	ø 164 x 20	
			Bre		82504800		⊕ AMG sport pack. ⊕ sport pack.					
				PRO	92106003	ø 300 x 28 x 46.5	⊖ AMG sport pack. ⊖ sport pack.					
				PRO	92106005	ø 300 x 28 x 46.5	⊖ AMG sport pack. ⊖ sport pack.					
				PRO	92119803	ø 330 x 28 x 46.5	⊕ AMG sport pack. ⊕ sport pack.					
					TPM0002							

		kW / hp												
C-CLASS (W203) 05/00→02/07														
		379700	Bre		2374502	[o] 23745 17.7		Ate		2130503	[o] 21305 16	
C 32 AMG Kompressor (203.065)	02/01→02/07	260 / 354										
C 55 AMG (203.076)	02/04→02/07	270 / 367	Bre	epad	2374581	[o] 23745 17.7		Ate	epad	2130581	[o] 21305 15.5	
					98024701	L95				98024701	L95	
			Bre		82075200				PRO	92137203	ø 300 x 22 x 53.6	
			Bre		82504700					TPM0002		
				PRO	92123703	ø 345 x 30 x 46.5				91057100	ø 164 x 20	
					TPM0002					97034500		
		379800	Luc		2314402	[o] 23144 19.8	⊕ USA ⊖ sport pack. ⊖ AMG sport pack.	Ate		2189803	[o] 21898 15.7	
C 350 4-matic (203.087)	01/05→02/07	200 / 272	Luc	epad	2314482	[o] 23144 19.8	⊕ USA ⊖ sport pack. ⊖ AMG sport pack.	Ate	epad	2189881	[o] 21898 15.7	
			Bre		2374502	[o] 23745 17.7	⊖ USA ⊖ sport pack. ⊖ AMG sport pack. ⊕ sport pack. ⊕ AMG sport pack.	Ate		82501300		
			Bre	epad	2374581	[o] 23745 17.7	⊖ USA ⊖ sport pack. ⊖ AMG sport pack. ⊕ sport pack. ⊕ AMG sport pack.		PRO	92072703	ø 290 x 10 x 55.2	
					98024701	L95				TPM0002		
			Gir		82059500		⊕ USA ⊖ sport pack. ⊖ AMG sport pack.			91057100	ø 164 x 20	
			Bre		82075200		⊖ USA ⊖ sport pack. ⊖ AMG sport pack. ⊕ sport pack. ⊕ AMG sport pack.			97034500		
			Luc		82063500		⊕ USA ⊕ sport pack. ⊕ AMG sport pack.					
					92123600	ø 345 x 30 x 46.5	⊖ USA ⊖ sport pack. ⊖ AMG sport pack.					
				PRO	92106003	ø 300 x 28 x 46.5	⊕ USA ⊖ sport pack. ⊖ AMG sport pack.					
				PRO	92106005	ø 300 x 28 x 46.5	⊕ USA ⊖ sport pack. ⊖ AMG sport pack.					
				PRO	92123603	ø 345 x 30 x 46.5	⊖ USA ⊖ sport pack. ⊖ AMG sport pack.					
				PRO	92123703	ø 345 x 30 x 46.5	⊕ sport pack. ⊕ AMG sport pack.					
					TPM0002							
		379900	Bre		2374502	[o] 23745 17.7		Ate	epad	2130581	[o] 21305 15.5	
C 55 AMG	09/04→12/05	260 / 354	Bre	epad	2374581	[o] 23745 17.7				98024701	L95	
					98024701	L95			PRO	92137203	ø 300 x 22 x 53.6	
			Bre		82075200					TPM0002		
				PRO	92123703	ø 345 x 30 x 46.5				91057100	ø 164 x 20	
					TPM0002							
C-CLASS (W204) 01/07→														
		380000	Luc		2430601	[o] 24306 20.6	⊖ AMG sport pack. ⊖ sport pack. ⊕ CN	Ate		2425301	[o] 24253 17.9	
C 180 CDI (204.000)	01/11→	88 / 120										
C 180 CGI (204.031)	01/08→	115 / 156										
C 180 CGI (204.049)	01/07→	115 / 156	Luc		2430602	[o] 24306 20.6	⊖ AMG sport pack. ⊖ sport pack.	Ate	epad	2425381	[o] 24253 17.9	
			Luc		2430603	[o] 24306 20.6	⊕ AMG sport pack. ⊕ sport pack. ⊖ CN	Ate		82062900		
			Luc	epad	2430681	[o] 24306 20.6	⊖ AMG sport pack. ⊖ sport pack. ⊕ CN	Ate		82503500		
			Luc	epad	2430682	[o] 24306 20.6	⊖ AMG sport pack. ⊖ sport pack.		PRO	92163103	ø 278 x 9 x 57.5	⊖ AMG sport pack. ⊖ sport pack.
					98024701	L95			PRO	92163303	ø 300 x 10 x 57.5	⊕ AMG sport pack. ⊕ sport pack. ⊕ CN
			Luc		82054100		⊖ AMG sport pack. ⊖ sport pack.			TPM0002		
			Luc		82073300		⊕ AMG sport pack. ⊕ sport pack. ⊖ CN			91066900	ø 164 x 25	
				PRO	92159603	ø 288 x 25 x 64.5	⊖ AMG sport pack. ⊖ sport pack.			97038300		
				PRO	92163203	ø 295 x 28 x 64.5	⊖ AMG sport pack. ⊖ sport pack. ⊕ CN					
				PRO	92165003	ø 295 x 28 x 64.5	⊕ AMG sport pack. ⊕ sport pack.					

C-CLASS (W204) 01/07→

		kW / hp												
380000														
C 180 CDI (204.000)	01/11→	88 / 120			TPM0002									
C 180 CGI (204.031)	01/08→	115 / 156												
C 180 CGI (204.049)	01/07→	115 / 156												
380100			Luc		2430602	[o] 24306 20.6	⊖ AMG sport pack. ⊖ sport pack.	Ate		2425301	[o] 24253 17.9	
C 180 Kompressor (204.044, 204.045)	01/08→	115 / 156	Luc		2430603	[o] 24306 20.6	⊕ AMG sport pack. ⊕ sport pack.	Ate		2425381	[o] 24253 17.9	
C 180 Kompressor (204.046)	01/07→	115 / 156	Luc		2430682	[o] 24306 20.6	⊖ AMG sport pack. ⊖ sport pack.	Ate		82062900		
					98024701	L95		Ate		82503500		
			Luc		82054100		⊖ AMG sport pack. ⊖ sport pack.			92163103	ø 278 x 9 x 57.5	⊖ AMG sport pack. ⊖ sport pack.
			Luc		82073300		⊕ AMG sport pack. ⊕ sport pack.			92163303	ø 300 x 10 x 57.5	⊕ AMG sport pack. ⊕ sport pack.
					92159603	ø 288 x 25 x 64.5				TPM0002		
					TPM0002					91066900	ø 164 x 25	
										97038300		
380200			Luc		2430601	[o] 24306 20.6	⊖ AMG sport pack. ⊖ sport pack.	Ate		2425301	[o] 24253 17.9	
C 200	05/11→	137 / 186										
C 200 CGI (204.048)	01/07→	135 / 184	Luc		2430603	[o] 24306 20.6	⊕ AMG sport pack. ⊕ sport pack.	Ate		2425381	[o] 24253 17.9	
C 220 CDI	01/07→	120 / 163										
C 220 CDI	01/07→	120 / 163										
C 220 CDI (204.002)	12/08→	125 / 170	Luc		2430681	[o] 24306 20.6	⊖ AMG sport pack. ⊖ sport pack.			98024701	L95	
C 220 CDI 4-matic (204.084)	02/13→	125 / 170										
C 230 (204.052)	01/07→	150 / 204			98024701	L95		Ate		82062900		
C 230 4-matic (204.085)	07/07→	150 / 204										
C 250 CGI (204.047)	07/09→	150 / 204	Luc		82073300		⊕ AMG sport pack. ⊕ sport pack.	Ate		82503500		
					92163203	ø 295 x 28 x 64.5	⊖ AMG sport pack. ⊖ sport pack.			92163303	ø 300 x 10 x 57.5	
					92165003	ø 295 x 28 x 64.5	⊕ AMG sport pack. ⊕ sport pack.			TPM0002		
					TPM0002					91066900	ø 164 x 25	
										97038300		
380300			Luc		2430601	[o] 24306 20.6	⊖ AMG sport pack. ⊖ sport pack. ⊕ CN	Ate		2425301	[o] 24253 17.9	
C 200 CDI (204.001)	01/11→	100 / 136	Luc		2430602	[o] 24306 20.6	⊖ AMG sport pack. ⊖ sport pack.	Ate		2425381	[o] 24253 17.9	
			Luc		2430603	[o] 24306 20.6	⊕ AMG sport pack. ⊕ sport pack. ⊖ CN	Ate		82062900		
			Luc		2430681	[o] 24306 20.6	⊖ AMG sport pack. ⊖ sport pack. ⊕ CN	Ate		82503500		
			Luc		2430682	[o] 24306 20.6	⊖ AMG sport pack. ⊖ sport pack.			92163103	ø 278 x 9 x 57.5	⊖ AMG sport pack. ⊖ sport pack.
					98024701	L95				92163303	ø 300 x 10 x 57.5	⊕ AMG sport pack. ⊕ sport pack. ⊕ CN
			Luc		82054100		⊖ AMG sport pack. ⊖ sport pack.			TPM0002		
			Luc		82073300		⊕ AMG sport pack. ⊕ sport pack. ⊖ CN			91066900	ø 164 x 25	
					92159603	ø 288 x 25 x 64.5	⊖ sport pack. ⊖ AMG sport pack.			97038300		
					92163203	ø 295 x 28 x 64.5	⊖ AMG sport pack. ⊖ sport pack. ⊕ CN					
					92165003	ø 295 x 28 x 64.5	⊕ AMG sport pack. ⊕ sport pack.					
					TPM0002							
380400			Luc		2430602	[o] 24306 20.6	⊖ AMG sport pack. ⊖ sport pack.	Ate		2425301	[o] 24253 17.9	
C 200 CDI (204.007)	01/07→	100 / 136	Luc		2430603	[o] 24306 20.6	⊕ AMG sport pack. ⊕ sport pack.	Ate		2425381	[o] 24253 17.9	
			Luc		2430682	[o] 24306 20.6	⊖ AMG sport pack. ⊖ sport pack.	Ate		82062900		
					98024701	L95		Ate		82503500		
			Luc		82054100		⊖ AMG sport pack. ⊖ sport pack.			92163103	ø 278 x 9 x 57.5	⊖ AMG sport pack. ⊖ sport pack.
			Luc		82073300		⊕ AMG sport pack. ⊕ sport pack.			92163303	ø 300 x 10 x 57.5	⊕ sport pack. ⊕ AMG sport pack.
					92159603	ø 288 x 25 x 64.5				TPM0002		
					TPM0002					91066900	ø 164 x 25	

kW / hp

C-CLASS (W204) 01/07→

C 200 CDI (204.007) 01/07→ 380400 100 / 136											97038300			
C 200 Kompressor (204.041) 01/07→ 380500 135 / 184	Luc		2430601	[o] 24306	20.6	⊖ AMG sport pack. ⊖ sport pack.	Ate		2425301	[o] 24253	17.9			
	Luc		2430603	[o] 24306	20.6	⊕ sport pack. ⊕ AMG sport pack.	Ate	epad	2425381	[o] 24253	17.9			
	Luc	epad	2430681	[o] 24306	20.6	⊖ AMG sport pack. ⊖ sport pack.			98024701	L95				
			98024701	L95			Ate		82062900					
	Luc		82073300			⊕ AMG sport pack. ⊕ sport pack.	Ate		82503500					
		PRO	92163203	ø 295 x 28 x 64.5		⊖ AMG sport pack. ⊖ sport pack.		PRO	92163303	ø 300 x 10 x 57.5				
		PRO	92165003	ø 295 x 28 x 64.5		⊕ AMG sport pack. ⊕ sport pack.			TPM0002					
			TPM0002						91066900	ø 164 x 25				
									97038300					
C 220 CDI (204.008) 01/07→ 380600 125 / 170	Luc		2430601	[o] 24306	20.6	⊖ AMG sport pack. ⊖ sport pack.	Ate		2425301	[o] 24253	17.9			
	Luc		2430603	[o] 24306	20.6	⊕ AMG sport pack. ⊕ sport pack.	Ate	epad	2425381	[o] 24253	17.9			
	Luc	epad	2430681	[o] 24306	20.6	⊖ AMG sport pack. ⊖ sport pack.			98024701	L95				
			98024701	L95			Ate		82062900					
	Luc		82073300			⊕ sport pack. ⊕ AMG sport pack.	Ate		82503500					
		PRO	92163203	ø 295 x 28 x 64.5		⊖ sport pack. ⊖ AMG sport pack.		PRO	92163303	ø 300 x 10 x 57.5				
		PRO	92165003	ø 295 x 28 x 64.5		⊕ sport pack. ⊕ AMG sport pack.			TPM0002					
			TPM0002						91066900	ø 164 x 25				
									97038300					
C 250 CDI (204.003) 08/08→ 380700 150 / 204	Luc		2430601	[o] 24306	20.6	⊖ AMG sport pack. ⊖ sport pack.	Ate		2425301	[o] 24253	17.9	alumin. call.		
	Luc		2430603	[o] 24306	20.6	⊕ AMG sport pack. ⊕ sport pack.	Ate	epad	2425381	[o] 24253	17.9	alumin. call.		
	Luc	epad	2430681	[o] 24306	20.6	⊖ AMG sport pack. ⊖ sport pack.	Ate		2425401	[o] 24254	17.9	cast iron call.		
			98024701	L95			Ate	epad	2425481	[o] 24254	17.9	cast iron call.		
	Luc		82073300			⊕ AMG sport pack. ⊕ sport pack.			98024701	L95				
		PRO	92163203	ø 295 x 28 x 64.5		⊖ AMG sport pack. ⊖ sport pack.	Ate		82062900					
		PRO	92165003	ø 295 x 28 x 64.5		⊕ AMG sport pack. ⊕ sport pack.	Ate		82503500					
			TPM0002						92163600	ø 300 x 22 x 57.1				
								PRO	92163603	ø 300 x 22 x 57.1				
									TPM0002					
									91066900	ø 164 x 25				
									97038300					
C 250 CDI 4-matic (204.082) 01/11→ 380800 150 / 204	Luc		2430601	[o] 24306	20.6	⊖ AMG sport pack. ⊖ sport pack.	Ate		2425301	[o] 24253	17.9	alumin. call.		
	Luc	epad	2430681	[o] 24306	20.6	⊖ AMG sport pack. ⊖ sport pack.	Ate	epad	2425381	[o] 24253	17.9	alumin. call.		
	Luc		2431001	[o] 24310	19.4	⊕ AMG sport pack. ⊕ sport pack.	Ate		2425401	[o] 24254	17.9	cast iron call.		
	Luc	epad	2431081	[o] 24310	19.4	⊕ AMG sport pack. ⊕ sport pack.	Ate	epad	2425481	[o] 24254	17.9	cast iron call.		
			98024701	L95					98024701	L95				
		PRO	92163203	ø 295 x 28 x 64.5		⊖ sport pack. ⊖ AMG sport pack.	Ate		82062900					
		PRO	92163403	ø 322 x 32 x 64.5		⊕ sport pack. ⊕ AMG sport pack.	Ate		82503500					
			TPM0002					PRO	92163303	ø 300 x 10 x 57.5		⊕ AMG sport pack. ⊕ sport pack.		
									92163600	ø 300 x 22 x 57.1		⊖ AMG sport pack. ⊖ sport pack.		

→

kW / hp

C-CLASS (W204) 01/07→

380800													
C 250 CDI 4-matic (204.082) 01/11→ 150 / 204									PRO	92163603	ø 300 x 22 x 57.1	⊖ AMG sport pack. ⊖ sport pack.	
										TPM0002			
										91066900	ø 164 x 25		
										97038300			
380900	Luc		2430601	[o] 24306 20.6	⊖ AMG sport pack. ⊖ sport pack.		Ate		2425301	[o] 24253 17.9			
C 280 (204.054) 01/07→ 170 / 231													
C 280 4-matic (204.081) 07/07→ 170 / 231													
C 300 4-matic (204.081) 07/07→ 170 / 231	Luc	epad	2430681	[o] 24306 20.6	⊖ AMG sport pack. ⊖ sport pack.		Ate	epad	2425381	[o] 24253 17.9			
	Luc		2431001	[o] 24310 19.4	⊕ AMG sport pack. ⊕ sport pack.				98024701	L95			
	Luc	epad	2431081	[o] 24310 19.4	⊕ AMG sport pack. ⊕ sport pack.		Ate		82062900				
			98024701	L95			Ate		82503500				
		PRO	92163203	ø 295 x 28 x 64.5	⊖ AMG sport pack. ⊖ sport pack.			PRO	92163303	ø 300 x 10 x 57.5			
		PRO	92163403	ø 322 x 32 x 64.5	⊕ AMG sport pack. ⊕ sport pack.				TPM0002				
			TPM0002						91066900	ø 164 x 25			
									97038300				
381000	Luc		2431001	[o] 24310 19.4	⊖ AMG sport pack. ⊖ sport pack.		Ate		2425301	[o] 24253 17.9			
C 300 (204.054) 07/09→ 170 / 231													
C 300 (204.055) 02/11→ 185 / 252	Luc	epad	2431081	[o] 24310 19.4	⊖ AMG sport pack. ⊖ sport pack.		Ate	epad	2425381	[o] 24253 17.9			
			98024701	L95					98024701	L95			
	Luc		82518300		⊕ AMG sport pack. ⊕ sport pack.		Ate		82062900				
			92163500	ø 322 x 32 x 64.5	⊖ AMG sport pack. ⊖ sport pack.		Ate		82503500				
		PRO	92163503	ø 322 x 32 x 64.5	⊖ AMG sport pack. ⊖ sport pack.				92163600	ø 300 x 22 x 57.1			
		PRO	92163403	ø 322 x 32 x 64.5	⊕ AMG sport pack. ⊕ sport pack.			PRO	92163603	ø 300 x 22 x 57.1			
			TPM0002						TPM0002				
									91066900	ø 164 x 25			
									97038300				
381100	Luc		2431001	[o] 24310 19.4	⊖ AMG sport pack. ⊖ sport pack.		Ate		2425301	[o] 24253 17.9			
C 300 4-matic (204.080) 02/11→ 185 / 252	Luc	epad	2431081	[o] 24310 19.4	⊖ AMG sport pack. ⊖ sport pack.		Ate	epad	2425381	[o] 24253 17.9			
			98024701	L95					98024701	L95			
	Luc		82518300				Ate		82062900				
			92163500	ø 322 x 32 x 64.5	⊖ AMG sport pack. ⊖ sport pack.		Ate		82503500				
		PRO	92163503	ø 322 x 32 x 64.5	⊖ AMG sport pack. ⊖ sport pack.				92163600	ø 300 x 22 x 57.1			
		PRO	92163403	ø 322 x 32 x 64.5	⊕ AMG sport pack. ⊕ sport pack.			PRO	92163603	ø 300 x 22 x 57.1			
			TPM0002						TPM0002				
									91066900	ø 164 x 25			
									97038300				
381200	Luc		2431001	[o] 24310 19.4			Ate		2425301	[o] 24253 17.9	alumin. call.		
C 300 CDI 4-matic (204.092) 01/11→ 170 / 231	Luc	epad	2431081	[o] 24310 19.4			Ate	epad	2425381	[o] 24253 17.9	alumin. call.		
			98024701	L95			Ate		2425401	[o] 24254 17.9	cast iron call.		
	Luc		82518300				Ate	epad	2425481	[o] 24254 17.9	cast iron call.		
		PRO	92163503	ø 322 x 32 x 64.5	⊖ AMG sport pack. ⊖ sport pack.				98024701	L95			
		PRO	92163403	ø 322 x 32 x 64.5	⊕ AMG sport pack. ⊕ sport pack.		Ate		82062900				
			TPM0002				Ate		82503500				

I - M

kW / hp

C-CLASS (W204) 01/07→

381200														
C 300 CDI 4-matic (204.092)	01/11→	170 / 231								PRO	92163603	ø 300 x 22 x 57.1	
											TPM0002		
											91066900	ø 164 x 25	
											97038300		
381300			Luc		2431001	[o] 24310 19.4		Ate		2425301	[o] 24253 17.9	alumin. call.	
C 320 CDI (204.022)	01/07→	165 / 224											
C 320 CDI 4-matic (204.089)	07/07→	165 / 224	Luc		2431081	[o] 24310 19.4		Ate		2425381	[o] 24253 17.9	alumin. call.	
C 350 (204.056)	01/07→	200 / 272											
C 350 (204.057)	01/11→	225 / 306											
C 350 4-matic (204.087)	07/07→	200 / 272			98024701	L95		Ate		2425401	[o] 24254 17.9	cast iron call.	
C 350 4-matic (204.088)	01/11→	225 / 306											
C 350 CDI (204.022)	07/09→	165 / 224	Luc		82518300			Ate		2425481	[o] 24254 17.9	cast iron call.	
C 350 CDI (204.023)	06/11→	195 / 265											
C 350 CDI (204.025)	10/09→	170 / 231											
C 350 CDI 4-matic (204.089)	07/09→	165 / 224			92163500	ø 322 x 32 x 64.5	⊖ AMG sport pack. ⊖ sport pack.			98024701	L95		
C 350 CDI 4-matic (204.092)	10/09→	170 / 231		PRO	92163503	ø 322 x 32 x 64.5	⊖ AMG sport pack. ⊖ sport pack.	Ate		82062900			
C 350 CGI (204.065)	09/08→	215 / 292		PRO	92163403	ø 322 x 32 x 64.5	⊕ AMG sport pack. ⊕ sport pack.	Ate		82503500			
					TPM0002					92163600	ø 300 x 22 x 57.1		
									PRO	92163603	ø 300 x 22 x 57.1		
										TPM0002			
										91066900	ø 164 x 25		
										97038300			
381400					98036401	L98				98036401	L98		
C 63 AMG	02/08→	373 / 507											
C 63 AMG	07/10→	382 / 520			TPM0002					TPM0002			
										91066900	ø 164 x 25		
381500					98036401	L98		Bre		2447301	[–] 24473 14.8		
C 63 AMG (204.077)	02/08→	336 / 457											
C 63 AMG (204.077)	02/08→	358 / 487			TPM0002					98036401	L98		
										TPM0002			
										91066900	ø 164 x 25		
										97038300			

C-CLASS (W205) 12/13→

381600					98048700	L93				98048700	L93		
C 180 (205.040)	03/14→	115 / 156											
C 180 BlueTEC (205.036)	05/14→	85 / 116			TPM0002					TPM0002			
C 200 (205.042)	12/13→	135 / 184											
C 200 BlueTEC (205.037)	05/14→	100 / 136											
C 220 BlueTEC (205.003)	03/14→	120 / 163											
C 220 BlueTEC (205.004)	12/13→	125 / 170											
C 250 BlueTEC (205.008)	02/14→	150 / 204											
C 250 BlueTEC 4-matic (205.009)	02/14→	150 / 204											
C 250 CGI (205.045)	03/14→	155 / 211											
C 300 BlueTEC Hybrid (205.012)	05/14→	150 / 204											

C-CLASS Break (S202) 06/96→03/01 → C-CLASS Estate (S202), Page 592

C-CLASS Coupe (C204) 06/11→

381700			Luc		2430601	[o] 24306 20.6	⊖ AMG sport pack. ⊖ sport pack. ⊕ KR	Ate		2425301	[o] 24253 17.9		
C 180 (204.331)	01/13→	115 / 156											
			Luc		2430602	[o] 24306 20.6	⊖ AMG sport pack. ⊖ sport pack.	Ate		2425381	[o] 24253 17.9		
			Luc		2430603	[o] 24306 20.6	⊕ AMG sport pack. ⊕ sport pack.	Ate		82503500			
			Luc		2430681	[o] 24306 20.6	⊖ AMG sport pack. ⊖ sport pack. ⊕ KR		PRO	92163103	ø 278 x 9 x 57.5	⊖ AMG sport pack. ⊖ sport pack.	
			Luc		2430682	[o] 24306 20.6	⊖ AMG sport pack. ⊖ sport pack.		PRO	92163303	ø 300 x 10 x 57.5	⊕ AMG sport pack. ⊕ sport pack.	
					98024701	L95				TPM0002			
				PRO	92159603	ø 288 x 25 x 64.5	⊖ AMG sport pack. ⊖ sport pack.			91066900	ø 164 x 25		
				PRO	92163203	ø 295 x 28 x 64.5	⊖ AMG sport pack. ⊖ sport pack. ⊕ KR						
				PRO	92165003	ø 295 x 28 x 64.5	⊕ AMG sport pack. ⊕ sport pack.						

C-CLASS Coupe (C204) 06/11→

		kW / hp												
C 180 (204.331)	01/13→	381700 115 / 156			TPM0002									
C 180 (204.349)	06/11→	381800 115 / 156	Luc		2430601	[o] 24306 20.6	⊕ USA ⊖ AMG sport pack.	Ate		2425301	[o] 24253 17.9	
			Luc		2430602	[o] 24306 20.6	⊖ AMG sport pack. ⊖ sport pack.	Ate	epad	2425381	[o] 24253 17.9	
			Luc		2430603	[o] 24306 20.6	⊕ AMG sport pack. ⊕ sport pack.			98024701	L95	
			Luc		2430681	[o] 24306 20.6	⊕ USA ⊖ AMG sport pack.	Ate		82503500		
			Luc	epad	2430682	[o] 24306 20.6	⊖ AMG sport pack. ⊖ sport pack.		PRO	92163103	ø 278 x 9 x 57.5	
			Luc		2431001	[o] 24310 19.4	⊕ USA ⊕ sport pack.			TPM0002		
			Luc	epad	2431081	[o] 24310 19.4	⊕ USA ⊕ sport pack.			91066900	ø 164 x 25	
					98024701	L95				97038300		
			Luc		82054100		⊖ AMG sport pack. ⊖ sport pack.					
			Luc		82073300		⊕ AMG sport pack. ⊕ sport pack.					
				PRO	92159603	ø 288 x 25 x 64.5	⊖ sport pack. ⊖ AMG sport pack. ⊖ USA					
				PRO	92163203	ø 295 x 28 x 64.5	⊕ USA ⊖ sport pack. ⊖ AMG sport pack.					
				PRO	92165003	ø 295 x 28 x 64.5	⊕ USA ⊕ AMG sport pack. ⊕ sport pack.					
					TPM0002							
C 200 CGI (204.348)	06/11→	381900 135 / 184	Luc		2430603	[o] 24306 20.6	⊕ sport pack. ⊕ AMG sport pack.	Ate		2425301	[o] 24253 17.9	⊕ USA
			Luc		2431001	[o] 24310 19.4	⊕ USA ⊖ AMG sport pack. ⊖ sport pack.	Ate	epad	2425381	[o] 24253 17.9	⊕ USA
			Luc	epad	2431081	[o] 24310 19.4	⊕ USA ⊖ AMG sport pack. ⊖ sport pack.			98024701	L95	
					98024701	L95		Ate		82503500		
			Luc		82518300				PRO	92163303	ø 300 x 10 x 57.5	⊕ USA
				PRO	92163203	ø 295 x 28 x 64.5	⊕ USA ⊖ AMG sport pack. ⊖ sport pack.			TPM0002		
				PRO	92165003	ø 295 x 28 x 64.5	⊕ sport pack. ⊕ AMG sport pack.			91066900	ø 164 x 25	
					TPM0002							
C 220 CDI (204.302)	06/11→	382000 120 / 163	Luc		2430601	[o] 24306 20.6	⊕ AMG sport pack. ⊕ sport pack.	Ate		2425301	[o] 24253 17.9	
			Luc		2430603	[o] 24306 20.6	⊖ AMG sport pack. ⊖ sport pack.	Ate	epad	2425381	[o] 24253 17.9	
			Luc	epad	2430681	[o] 24306 20.6	⊕ AMG sport pack. ⊕ sport pack.			98024701	L95	
					98024701	L95		Ate		82503500		
			Luc		82073300		⊕ AMG sport pack. ⊕ sport pack.		PRO	92163303	ø 300 x 10 x 57.5	
				PRO	92163203	ø 295 x 28 x 64.5	⊕ AMG sport pack. ⊕ sport pack.			TPM0002		
				PRO	92165003	ø 295 x 28 x 64.5	⊖ AMG sport pack. ⊖ sport pack.			91066900	ø 164 x 25	
										97038300		
C 220 CDI (204.302)	06/11→	382100 125 / 170	Luc		2430601	[o] 24306 20.6	⊖ AMG sport pack. ⊖ sport pack.	Ate		2425301	[o] 24253 17.9	
			Luc		2430603	[o] 24306 20.6	⊕ AMG sport pack. ⊕ sport pack.	Ate	epad	2425381	[o] 24253 17.9	
			Luc	epad	2430681	[o] 24306 20.6	⊖ AMG sport pack. ⊖ sport pack.			98024701	L95	
					98024701	L95		Ate		82503500		
			Luc		82073300		⊕ AMG sport pack. ⊕ sport pack.		PRO	92163303	ø 300 x 10 x 57.5	
				PRO	92163203	ø 295 x 28 x 64.5	⊖ AMG sport pack. ⊖ sport pack.			TPM0002		
				PRO	92165003	ø 295 x 28 x 64.5	⊕ AMG sport pack. ⊕ sport pack.			91066900	ø 164 x 25	
					TPM0002					97038300		
C 250 (204.347)	06/11→	382200 150 / 204	Luc		2430601	[o] 24306 20.6	⊖ AMG sport pack. ⊖ sport pack.	Ate		2425301	[o] 24253 17.9	

I - M

kW / hp

C-CLASS Coupe (C204) 06/11→

C 250 (204.347)	06/11→	382200 150 / 204	Luc		2430603	[o] 24306 20.6	⊕ AMG sport pack. ⊕ sport pack.	Ate		2425381	[o] 24253 17.9	
			Luc	epad	2430681	[o] 24306 20.6	⊖ AMG sport pack. ⊖ sport pack.			98024701	L95	
					98024701	L95		Ate		82503500		
			Luc		82073300		⊕ AMG sport pack. ⊕ sport pack.		PRO	92163303	ø 300 x 10 x 57.5	
				PRO	92163303	ø 300 x 10 x 57.5	⊖ sport pack.			TPM0002		
				PRO	92163603	ø 300 x 22 x 57.1	⊕ sport pack.			91066900	ø 164 x 25	
					TPM0002					97038300		
C 250 CDI (204.303)	06/11→	382300 150 / 204	Luc		2430601	[o] 24306 20.6	⊖ AMG sport pack. ⊖ sport pack.	Ate		2425301	[o] 24253 17.9	
			Luc		2430603	[o] 24306 20.6	⊕ AMG sport pack. ⊕ sport pack.	Ate	epad	2425381	[o] 24253 17.9	
			Luc	epad	2430681	[o] 24306 20.6	⊖ AMG sport pack. ⊖ sport pack.			98024701	L95	
					98024701	L95		Ate		82503500		
			Luc		82073300		⊕ AMG sport pack. ⊕ sport pack.			92163600	ø 300 x 22 x 57.1	
				PRO	92163203	ø 295 x 28 x 64.5	⊖ AMG sport pack. ⊖ sport pack.		PRO	92163603	ø 300 x 22 x 57.1	
				PRO	92165003	ø 295 x 28 x 64.5	⊕ AMG sport pack. ⊕ sport pack.			TPM0002		
					TPM0002					91066900	ø 164 x 25	
										97038300		
C 300 4-matic	09/12→	382400 185 / 252	Luc		2430601	[o] 24306 20.6	⊖ sport pack. ⊖ AMG sport pack.	Ate		2425301	[o] 24253 17.9	⊕ USA
			Luc	epad	2430681	[o] 24306 20.6	⊖ sport pack. ⊖ AMG sport pack.	Ate	epad	2425381	[o] 24253 17.9	⊕ USA
			Luc		2431001	[o] 24310 19.4	⊕ sport pack. ⊕ AMG sport pack.			98024701	L95	
			Luc	epad	2431081	[o] 24310 19.4	⊕ sport pack. ⊕ AMG sport pack.	Ate		82503500		
					98024701	L95			PRO	92163303	ø 300 x 10 x 57.5	
			Luc		82518300					TPM0002		
				PRO	92163203	ø 295 x 28 x 64.5	⊖ sport pack. ⊖ AMG sport pack.			91066900	ø 164 x 25	
				PRO	92163403	ø 322 x 32 x 64.5	⊕ sport pack. ⊕ AMG sport pack.					
				PRO	92165003	ø 295 x 28 x 64.5	⊕ USA					
					TPM0002							
C 350 (204.357)	06/11→	382500 225 / 306	Luc		2431001	[o] 24310 19.4		Ate		2425301	[o] 24253 17.9	
			Luc	epad	2431081	[o] 24310 19.4		Ate	epad	2425381	[o] 24253 17.9	
					98024701	L95				98024701	L95	
					92163500	ø 322 x 32 x 64.5	⊖ sport pack. ⊖ AMG sport pack.	Ate		82503500		
				PRO	92163503	ø 322 x 32 x 64.5	⊖ sport pack. ⊖ AMG sport pack.			92163600	ø 300 x 22 x 57.1	
				PRO	92163403	ø 322 x 32 x 64.5	⊕ sport pack. ⊕ AMG sport pack.		PRO	92163603	ø 300 x 22 x 57.1	
					TPM0002					TPM0002		
										91066900	ø 164 x 25	
										97038300		
C 350 4-matic	09/13→	382600 225 / 306	Luc		2431001	[o] 24310 19.4		Ate		2425301	[o] 24253 17.9	
			Luc	epad	2431081	[o] 24310 19.4		Ate	epad	2425381	[o] 24253 17.9	
					98024701	L95				98024701	L95	
			Luc		82518300			Ate		82503500		
					92163500	ø 322 x 32 x 64.5	⊖ AMG sport pack. ⊖ sport pack.			TPM0002		

C-CLASS Coupe (C204) 06/11→

		kW / hp											
382600													
C 350 4-matic	09/13→	225 / 306		PRO	92163503	ø 322 x 32 x 64.5	⊖ AMG sport pack. ⊖ sport pack.			91066900	ø 164 x 25	
				PRO	92163403	ø 322 x 32 x 64.5	⊕ AMG sport pack. ⊕ sport pack.					
					TPM0002							
382700					98036401	L98				98036401	L98	
C 63 AMG (204.377)	06/11→	336 / 457			TPM0002					TPM0002		
C 63 AMG (204.377)	01/12→	358 / 487								91066900	ø 164 x 25	
C 63 AMG (204.377)	01/12→	380 / 517								97038300		
C 63 AMG (204.377)	11/12→	373 / 507										

C-CLASS Coupe (CL203) 03/01→05/08

382800			Luc		2314401	[o] 23144 19.8		Ate		2191901	[–] 21919 15.3		
C 160 Kompressor (203.730)	05/02→05/08	90 / 122											
C 180 (203.735)	03/01→05/02	95 / 129	Luc	epad	2314481	[o] 23144 19.8		Ate	epad	2191981	[–] 21919 15.3		
C 180 Kompressor (203.746)	05/02→05/08	105 / 143											
C 200 CDI (203.707)	03/03→05/08	90 / 122			98024701	L95		Ate		82500000			
C 200 CGI Kompressor (203.743)	03/03→05/08	125 / 170											
C 200 Kompressor (203.742)	05/02→05/08	120 / 163	Luc		82055400				PRO	92032703	ø 278 x 9 x 53.5		
C 200 Kompressor (203.745)	03/01→05/02	120 / 163											
C 220	05/02→05/08	120 / 163	Luc		82063500					TPM0002			
C 220 CDI (203.706)	03/01→05/08	105 / 143											
C 220 CDI (203.708)	02/04→05/08	110 / 150		PRO	92105903	ø 288 x 25 x 46.5				91057100	ø 164 x 20		
					TPM0002					97034500			
382900			Luc		2314401	[o] 23144 19.8		Ate		2191901	[–] 21919 15.3		
C 220 CDI	03/01→05/08	100 / 136											
			Luc	epad	2314481	[o] 23144 19.8		Ate	epad	2191981	[–] 21919 15.3		
				PRO	92105903	ø 288 x 25 x 46.5			PRO	92032703	ø 278 x 9 x 53.5		
					TPM0002					TPM0002			
										91057100	ø 164 x 20		
383000			Luc		2314402	[o] 23144 19.8		Ate		2189803	[o] 21898 15.7		
C 230 (203.752)	01/05→05/08	150 / 204											
C 320 (203.764)	09/02→05/08	160 / 218	Luc	epad	2314482	[o] 23144 19.8		Ate	epad	2189881	[o] 21898 15.7		
					98024701	L95		Ate		82501300			
			Gir		82059500				PRO	92032703	ø 278 x 9 x 53.5		
			Luc		82063500					TPM0002			
				PRO	92106003	ø 300 x 28 x 46.5				91057100	ø 164 x 20		
				PRO	92106005	ø 300 x 28 x 46.5				97034500			
					TPM0002								
383100			Luc		2314401	[o] 23144 19.8	⊕ USA	Ate		2191901	[–] 21919 15.3	⊕ USA	
C 230 Kompressor	09/01→12/02	143 / 194											
			Luc		2314402	[o] 23144 19.8	⊖ USA	Ate	epad	2191981	[–] 21919 15.3	⊕ USA	
			Luc	epad	2314481	[o] 23144 19.8	⊕ USA	Ate		2189803	[o] 21898 15.7	⊖ USA	
			Luc	epad	2314482	[o] 23144 19.8	⊖ USA	Ate	epad	2189881	[o] 21898 15.7	⊖ USA	
					98024701	L95				98024701	L95		
				PRO	92105903	ø 288 x 25 x 46.5	⊕ USA ⊕ AUS		PRO	92032703	ø 278 x 9 x 53.5	⊕ USA	
				PRO	92106003	ø 300 x 28 x 46.5	⊖ USA ⊖ AUS		PRO	92072703	ø 290 x 10 x 55.2	⊖ USA	
				PRO	92106005	ø 300 x 28 x 46.5	⊖ USA ⊖ AUS			TPM0002			
					TPM0002					91057100	ø 164 x 20		
383200			Luc		2314401	[o] 23144 19.8	⊕ J ⊕ USA ⊕ AUS	Ate		2191901	[–] 21919 15.3	⊕ J ⊕ USA ⊕ AUS	
C 230 Kompressor (203.740)	05/02→05/08	141 / 192											
C 230 Kompressor (203.747)	03/01→05/02	145 / 197	Luc		2314402	[o] 23144 19.8	⊖ J ⊖ USA ⊖ AUS	Ate	epad	2191981	[–] 21919 15.3	⊕ J ⊕ USA ⊕ AUS	
			Luc	epad	2314481	[o] 23144 19.8	⊕ J ⊕ USA ⊕ AUS	Ate		2189803	[o] 21898 15.7	⊖ J ⊖ USA ⊖ AUS	

kW / hp

C-CLASS Coupe (CL203) 03/01→05/08

383200															
C 230 Kompressor (203.740)	05/02→05/08	141 / 192	Luc	epad	2314482	[o] 23144 19.8	⊖ J ⊖ USA ⊖ AUS		Ate	epad	2189881	[o] 21898 15.7	⊖ J ⊖ USA ⊖ AUS	
C 230 Kompressor (203.747)	03/01→05/02	145 / 197			98024701	L95			Ate		82500000		⊕ J ⊕ USA ⊕ AUS	
			Luc		82055400		⊕ J ⊕ USA ⊕ AUS		Ate		82501300		⊖ J ⊖ USA ⊖ AUS	
			Gir		82059500		⊖ J ⊖ USA ⊖ AUS			PRO	92032703	ø 278 x 9 x 53.5	⊕ J ⊕ USA ⊕ AUS	
			Luc		82063500					PRO	92072703	ø 290 x 10 x 55.2	⊖ J ⊖ USA ⊖ AUS	
				PRO	92105903	ø 288 x 25 x 46.5	⊕ J ⊕ USA ⊕ AUS				TPM0002			
				PRO	92106003	ø 300 x 28 x 46.5	⊖ J ⊖ USA ⊖ AUS				91057100	ø 164 x 20		
				PRO	92106005	ø 300 x 28 x 46.5	⊖ J ⊖ USA ⊖ AUS				97034500			
					TPM0002									
383300															
C 30 CDI AMG (203.718)	09/02→05/08	170 / 231	Bre		2374502	[o] 23745 17.7			Ate		2130503	[o] 21305 16		
C 32 AMG Kompressor (203.765)	05/02→05/08	260 / 354	Bre	epad	2374581	[o] 23745 17.7			Ate	epad	2130581	[o] 21305 15.5		
					98024701	L95				PRO	92137203	ø 300 x 22 x 53.6		
			Bre		82075200						TPM0002			
			Bre		82504700						91057100	ø 164 x 20		
				PRO	92123703	ø 345 x 30 x 46.5					97034500			
					TPM0002									
383400															
C 350 (203.756)	01/05→05/08	200 / 272	Bre		2394501	[o] 23945 16.5			Ate		2189803	[o] 21898 15.7		
					98024701	L95			Ate	epad	2189881	[o] 21898 15.7		
			Bre		82075200				Ate		82501300			
					92151000	ø 330 x 28 x 46.5				PRO	92072703	ø 290 x 10 x 55.2		
				PRO	92151003	ø 330 x 28 x 46.5					TPM0002			
					TPM0002						91057100	ø 164 x 20		
											97034500			

C-CLASS Coupe Sport (CL203) 03/01→05/08 → C-CLASS Coupe (CL203), Page 591

C-CLASS Estate (S202) 06/96→03/01

383500															
C 180 T (202.078)	06/96→09/00	90 / 122	Luc		2143905	[o] 21439 20.3			Ate		2191903	[–] 21919 15.7	cal. + 1 holding pin A379347/F576241→	
C 180 T (202.081)	09/00→03/01	95 / 129			98021300	L90			Ate		2119701	[o] 21197 15	cal. + 2 holding pins →A379346/F576240	
C 200 T (202.080)	06/96→03/01	100 / 136												
C 200 T CDI (202.194)	03/98→03/01	75 / 102												
C 200 T D (202.180)	10/96→03/01	65 / 88	Luc		82062800						98021301	L90		
C 220 T CDI (202.193)	09/97→03/01	92 / 125												
C 220 T D	06/96→03/01	55 / 75		PRO	92059403	ø 284 x 22 x 43.5			Ate		82019500		cal. + 2 holding pins →A379346/F576240	
					TPM0001				Ate		82058800		cal. + 1 holding pin A379347/F576241→	
										PRO	92032703	ø 278 x 9 x 53.5		
											TPM0001			
											91032800	ø 164 x 20		
											97011600			
383600															
C 200 T Kompressor (202.082)	11/96→03/01	141 / 192	Ate		2166404	[o] 21664 19.8			Ate		2191903	[–] 21919 15.7	cal. + 1 holding pin F576241→	
C 200 T Kompressor (202.087)	09/00→03/01	120 / 163	Ate	epad	2166481	[o] 21664 19.8			Ate		2119701	[o] 21197 15	cal. + 2 holding pins →F576240	
C 230 T Kompressor (202.085)	06/97→09/00	142 / 193			98021300	L90					98021301	L90		
C 240 T (202.086)	06/97→09/00	125 / 170												
C 240 T (202.088)	09/00→03/01	125 / 170	Ate		82032000				Ate		82019500		cal. + 2 holding pins →F576240	
C 250 T Turbo-D (202.188)	06/96→03/01	110 / 150												
C 280 T (202.089)	06/97→03/01	145 / 197	Ate		82062900				Ate		82058800		cal. + 1 holding pin F576241→	
				PRO	92105903	ø 288 x 25 x 46.5				PRO	92032703	ø 278 x 9 x 53.5		

C-CLASS Estate (S202) 06/96→03/01

			383600										
C 200 T Kompressor (202.082)	11/96→03/01	141 / 192			TPM0001					TPM0001			
C 200 T Kompressor (202.087)	09/00→03/01	120 / 163								91032800	ø 164 x 20		
C 230 T Kompressor (202.085)	06/97→09/00	142 / 193								97011600			
C 240 T (202.086)	06/97→09/00	125 / 170											
C 240 T (202.088)	09/00→03/01	125 / 170											
C 250 T Turbo-D (202.188)	06/96→03/01	110 / 150											
C 280 T (202.089)	06/97→03/01	145 / 197											
			383700										
C 43 AMG (202.093)	08/97→03/01	225 / 306	Ate		2148401	[o] 21484 20.8		Ate		2130503	[o] 21305 16		
					98030800	L74		Ate	epad	2130581	[o] 21305 15.5		
			Ate		82059200					98021301	L90		
			Ate		82062900				PRO	92137203	ø 300 x 22 x 53.6		
					TPM0001					TPM0001			
										91032800	ø 164 x 20		
										97011600			

C-CLASS Kombi (S202) 06/96→03/01 → C-CLASS Estate (S202), Page 592

C-CLASS Saloon (W202) 03/93→05/00 → C-CLASS (W202), Page 578

C-CLASS Saloon (W203) 05/00→02/07 → C-CLASS (W203), Page 579

C-CLASS Saloon (W204) 01/07→ → C-CLASS (W204), Page 584

C-CLASS Sportcoupe (CL203) 03/01→05/08 → C-CLASS Coupe (CL203), Page 591

C-CLASS Sportscoupe (CL203) 03/01→05/08 → C-CLASS Coupe (CL203), Page 591

C-CLASS Stufenheck (W202) 03/93→05/00 → C-CLASS (W202), Page 578

C-CLASS Stufenheck (W203) 05/00→02/07 → C-CLASS (W203), Page 579

C-CLASS Stufenheck (W204) 01/07→ → C-CLASS (W204), Page 584

C-CLASS T-Model (S203) 03/01→08/07

			383800										
C 180 (203.235)	03/01→05/02	95 / 129	Luc		2314401	[o] 23144 19.8		Ate		2189803	[o] 21898 15.7		
			Luc	epad	2314481	[o] 23144 19.8		Ate	epad	2189881	[o] 21898 15.7		
					98024701	L95		Ate		82501300			
			Luc		82055400				PRO	92072703	ø 290 x 10 x 55.2		
			Luc		82063500					TPM0002			
				PRO	92105903	ø 288 x 25 x 46.5				91057100	ø 164 x 20		
					TPM0002					97034500			
			383900										
C 180 Kompressor (203.246)	05/02→08/07	105 / 143	Luc		2314401	[o] 23144 19.8	⊖ sport pack. ⊖ AMG sport pack.	Ate		2189803	[o] 21898 15.7		
C 200 CDI (203.207)	04/03→08/07	90 / 122	Luc	epad	2314481	[o] 23144 19.8	⊖ sport pack. ⊖ AMG sport pack.	Ate	epad	2189881	[o] 21898 15.7		
C 200 CGI Kompressor (203.243)	07/03→08/07	125 / 170	Bre		2374502	[o] 23745 17.7	→F565688 ⊖ J ⊕ sport pack. ⊕ AMG sport pack.	Ate		82501300			
C 200 Kompressor (203.242)	05/02→08/07	120 / 163					→F583910 ⊕ J ⊕ sport pack. ⊕ AMG sport pack.		PRO	92072703	ø 290 x 10 x 55.2		
C 220 CDI (203.208)	02/04→08/07	110 / 150	Bre	epad	2374581	[o] 23745 17.7	→F565688 ⊖ J ⊕ sport pack. ⊕ AMG sport pack.			TPM0002			
C 230 Kompressor (203.240)	02/04→08/07	141 / 192					→F583910 ⊕ J ⊕ sport pack. ⊕ AMG sport pack.			91057100	ø 164 x 20		
			Bre		2394501	[o] 23945 16.5	F565689→ ⊖ J ⊕ sport pack. ⊕ AMG sport pack.			97034500			
							F583911→ ⊕ J ⊕ sport pack. ⊕ AMG sport pack.						
					98024701	L95							
			Luc		82055400		⊖ sport pack. ⊖ AMG sport pack.						
			Bre		82075200		⊕ sport pack. ⊕ AMG sport pack.						
			Bre		82504700		→F565688 ⊖ J ⊕ sport pack. ⊕ AMG sport pack.						
							→F583910 ⊕ J ⊕ sport pack. ⊕ AMG sport pack.						
			Luc		82063500		⊖ sport pack. ⊖ AMG sport pack.						
				PRO	92105903	ø 288 x 25 x 46.5	⊖ sport pack. ⊖ AMG sport pack.						

kW / hp

C-CLASS T-Model (S203) 03/01→08/07

383900														
C 180 Kompressor (203.246) 05/02→08/07 105 / 143		PRO	92119803	ø 330 x 28 x 46.5	⊕ sport pack. ⊕ AMG sport pack.								
C 200 CDI (203.207) 04/03→08/07 90 / 122			TPM0002										
C 200 CGI Kompressor (203.243) 07/03→08/07 125 / 170													
C 200 Kompressor (203.242) 05/02→08/07 120 / 163													
C 220 CDI (203.208) 02/04→08/07 110 / 150													
C 230 Kompressor (203.240) 02/04→08/07 141 / 192													
384000	Luc		2314401	[o] 23144 19.8	⊖ sport pack. ⊖ AMG sport pack.	Ate		2189803	[o] 21898 15.7					
C 200 CDI (203.204, 203.207) 03/01→08/07 75 / 102	Luc	epad	2314481	[o] 23144 19.8	⊖ sport pack. ⊖ AMG sport pack.	Ate	epad	2189881	[o] 21898 15.7					
C 200 CDI (203.204) 03/01→08/07 85 / 116	Bre		2374502	[o] 23745 17.7	⊕ sport pack. ⊕ AMG sport pack.	Ate		82501300						
C 220 CDI (203.206) 03/01→08/07 105 / 143	Bre	epad	2374581	[o] 23745 17.7	⊕ sport pack. ⊕ AMG sport pack.		PRO	92072703	ø 290 x 10 x 55.2					
C 220 CDI (203.208) 08/06→08/07 100 / 136			98024701	L95				TPM0002						
	Luc		82055400		⊖ sport pack. ⊖ AMG sport pack.			91057100	ø 164 x 20					
	Bre		82075200		⊕ sport pack. ⊕ AMG sport pack.			97034500						
	Bre		82504700		⊕ sport pack. ⊕ AMG sport pack.									
	Luc		82063500		⊖ sport pack. ⊖ AMG sport pack.									
		PRO	92105903	ø 288 x 25 x 46.5	⊖ sport pack. ⊖ AMG sport pack.									
		PRO	92119803	ø 330 x 28 x 46.5	⊕ sport pack. ⊕ AMG sport pack.									
			TPM0002											
384100	Luc		2314401	[o] 23144 19.8		Ate		2189803	[o] 21898 15.7					
C 200 Kompressor (203.245) 03/01→05/02 120 / 163	Luc	epad	2314481	[o] 23144 19.8		Ate	epad	2189881	[o] 21898 15.7					
			98024701	L95		Ate		82500000						
	Luc		82055400				PRO	92072703	ø 290 x 10 x 55.2					
	Luc		82063500					TPM0002						
		PRO	92105903	ø 288 x 25 x 46.5				91057100	ø 164 x 20					
			TPM0002					97034500						
384200	Luc		2314401	[o] 23144 19.8	⊕ J ⊕ USA ⊕ AUS ⊖ sport pack. ⊖ AMG sport pack.	Ate		2189803	[o] 21898 15.7					
C 230 (203.252) 01/05→08/07 150 / 204	Luc	epad	2314402	[o] 23144 19.8	⊖ J ⊖ USA ⊖ AUS ⊖ sport pack. ⊖ AMG sport pack.	Ate	epad	2189881	[o] 21898 15.7					
	Luc	epad	2314481	[o] 23144 19.8	⊕ J ⊕ USA ⊕ AUS ⊖ sport pack. ⊖ AMG sport pack.	Ate		82501300						
	Luc	epad	2314482	[o] 23144 19.8	⊖ J ⊖ USA ⊖ AUS ⊖ sport pack. ⊖ AMG sport pack.		PRO	92072703	ø 290 x 10 x 55.2					
	Bre		2394501	[o] 23945 16.5	⊕ sport pack. ⊕ AMG sport pack.			TPM0002						
			98024701	L95				91057100	ø 164 x 20					
	Luc		82055400		⊕ J ⊕ USA ⊕ AUS ⊖ sport pack. ⊖ AMG sport pack.			97034500						
	Gir		82059500		⊖ J ⊖ USA ⊖ AUS ⊖ sport pack. ⊖ AMG sport pack.									
	Bre		82075200		⊕ sport pack. ⊕ AMG sport pack.									
	Luc		82063500		⊖ sport pack. ⊖ AMG sport pack.									
		PRO	92105903	ø 288 x 25 x 46.5	⊕ J ⊕ USA ⊕ AUS ⊖ sport pack. ⊖ AMG sport pack.									
		PRO	92106003	ø 300 x 28 x 46.5	⊖ J ⊖ USA ⊖ AUS ⊖ sport pack. ⊖ AMG sport pack.									
		PRO	92106005	ø 300 x 28 x 46.5	⊖ J ⊖ USA ⊖ AUS ⊖ sport pack. ⊖ AMG sport pack.									
		PRO	92119803	ø 330 x 28 x 46.5	⊕ sport pack. ⊕ AMG sport pack.									
			TPM0002											
384300	Luc		2314401	[o] 23144 19.8	⊖ sport pack. ⊖ AMG sport pack. ⊕ J ⊕ USA	Ate		2189803	[o] 21898 15.7					
C 240 (203.261) 03/01→08/07 125 / 170	Luc		2314402	[o] 23144 19.8	⊖ sport pack. ⊖ AMG sport pack. ⊖ J ⊖ USA	Ate	epad	2189881	[o] 21898 15.7					
	Luc	epad	2314481	[o] 23144 19.8	⊖ sport pack. ⊖ AMG sport pack. ⊕ J ⊕ USA	Ate		82501300						

30 kW / hp

C-CLASS T-Model (S203) 03/01→08/07

384300															
C 240 (203.261)	03/01→08/07	125 / 170	Luc		2314482	[o]	23144	19.8	⊖ sport pack. ⊖ AMG sport pack. ⊖ J ⊖ USA		PRO	92072703	ø 290 x 10 x 55.2		
			Bre		2374502	[o]	23745	17.7	→F565688 ⊖ J ⊕ sport pack. ⊕ AMG sport pack.			TPM0002			
									→F583910 ⊕ J ⊕ sport pack. ⊕ AMG sport pack.			91057100	ø 164 x 20		
			Bre		2374581	[o]	23745	17.7	→F565688 ⊖ J ⊕ sport pack. ⊕ AMG sport pack.			97034500			
									→F583910 ⊕ J ⊕ sport pack. ⊕ AMG sport pack.						
			Bre		2394501	[o]	23945	16.5	F565689→ ⊖ J ⊕ sport pack. ⊕ AMG sport pack.						
									F583911→ ⊕ J ⊕ sport pack. ⊕ AMG sport pack.						
					98024701	L95									
			Luc		82055400				⊖ sport pack. ⊖ AMG sport pack. ⊕ J ⊕ USA						
			Gir		82059500				⊖ sport pack. ⊖ AMG sport pack. ⊖ J ⊖ USA						
			Bre		82075200				⊕ sport pack. ⊕ AMG sport pack.						
			Bre		82504700				→F565688 ⊖ J ⊕ sport pack. ⊕ AMG sport pack.						
									→F583910 ⊕ J ⊕ sport pack. ⊕ AMG sport pack.						
			Luc		82063500				⊖ sport pack. ⊖ AMG sport pack.						
				PRO	92105903	ø 288 x 25 x 46.5			⊖ sport pack. ⊖ AMG sport pack. ⊕ J ⊕ USA						
				PRO	92106003	ø 300 x 28 x 46.5			⊖ sport pack. ⊖ AMG sport pack. ⊖ J ⊖ USA						
				PRO	92106005	ø 300 x 28 x 46.5			⊖ sport pack. ⊖ AMG sport pack. ⊖ J ⊖ USA						
				PRO	92119803	ø 330 x 28 x 46.5			⊕ sport pack. ⊕ AMG sport pack.						
					TPM0002										
384400															
C 240 4-matic (203.281)	07/02→08/07	125 / 170	Luc		2314402	[o]	23144	19.8		Ate		2189803	[o]	21898	15.7
C 320 4-matic (203.284)	07/02→08/07	160 / 218	Luc		2314482	[o]	23144	19.8		Ate		2189881	[o]	21898	15.7
					98024701	L95				Ate		82501300			
			Gir		82059500						PRO	92072703	ø 290 x 10 x 55.2		
			Luc		82063500							TPM0002			
				PRO	92106003	ø 300 x 28 x 46.5						91057100	ø 164 x 20		
				PRO	92106005	ø 300 x 28 x 46.5						97034500			
					TPM0002										
384500			Luc		2314402	[o]	23144	19.8	⊖ sport pack. ⊖ AMG sport pack.	Ate		2189803	[o]	21898	15.7
C 270 CDI (203.216)	03/01→08/07	125 / 170	Luc		2314482	[o]	23144	19.8	⊖ sport pack. ⊖ AMG sport pack.	Ate		2189881	[o]	21898	15.7
C 320 (203.264, 203.764)	03/01→08/07	160 / 218	Bre		2374502	[o]	23745	17.7	⊖ J →A660226 →F565688 →R138317 ⊕ sport pack. ⊕ AMG sport pack.	Ate		82501300			
									⊕ J →F583910 →F150814 ⊕ sport pack. ⊕ AMG sport pack.		PRO	92072703	ø 290 x 10 x 55.2		
			Bre		2374581	[o]	23745	17.7	⊖ J →A660226 →F565688 →R138317 ⊕ sport pack. ⊕ AMG sport pack.			TPM0002			
									⊕ J →F583910 →F150814 ⊕ sport pack. ⊕ AMG sport pack.			91057100	ø 164 x 20		
			Bre		2394501	[o]	23945	16.5	⊖ J A660227→ F565689→ R138318→ ⊕ sport pack. ⊕ AMG sport pack.			97034500			
									⊕ J F583911→ R150815→ ⊕ sport pack. ⊕ AMG sport pack.						
					98024701	L95									
			Gir		82059500				⊖ sport pack. ⊖ AMG sport pack.						
			Bre		82075200				⊕ sport pack. ⊕ AMG sport pack.						
			Bre		82504700				⊖ J →A660226 →F565688 →R138317 ⊕ sport pack. ⊕ AMG sport pack.						
									⊕ J →F583910 →F150814 ⊕ sport pack. ⊕ AMG sport pack.						
			Luc		82063500				⊖ sport pack. ⊖ AMG sport pack.						

I - M

		kW / hp											
C-CLASS T-Model (S203) 03/01→08/07													
		384500		PRO	**92106003**	ø 300 x 28 x 46.5	⊖ sport pack. ⊖ AMG sport pack.						
C 270 CDI (203.216)	03/01→08/07	125 / 170		PRO	**92106005**	ø 300 x 28 x 46.5	⊖ sport pack. ⊖ AMG sport pack.						
C 320 (203.264, 203.764)	03/01→08/07	160 / 218		PRO	**92119803**	ø 330 x 28 x 46.5	⊕ sport pack. ⊕ AMG sport pack.						
					TPM0002								
		384600	Luc		**2314402**	[o] 23144 19.8	⊖ sport pack. ⊖ AMG sport pack.	Ate		**2189803**	[o] 21898 15.7		
C 280 (203.254)	01/05→08/07	170 / 231	Luc	epad	**2314482**	[o] 23144 19.8	⊖ sport pack. ⊖ AMG sport pack.	Ate	epad	**2189881**	[o] 21898 15.7		
C 280 4-matic (203.292)	01/05→08/07	170 / 231	Bre		**2394501**	[o] 23945 16.5	⊕ sport pack. ⊕ AMG sport pack.	Ate		**82501300**			
					98024701	L95			PRO	**92072703**	ø 290 x 10 x 55.2		
			Gir		**82059500**		⊖ sport pack. ⊖ AMG sport pack.			**TPM0002**			
			Bre		**82075200**		⊕ sport pack. ⊕ AMG sport pack.			**91057100**	ø 164 x 20		
			Luc		**82063500**		⊖ sport pack. ⊖ AMG sport pack.			**97034500**			
				PRO	**92106003**	ø 300 x 28 x 46.5							
				PRO	**92106005**	ø 300 x 28 x 46.5							
					TPM0002								
		384700	Bre		**2374502**	[o] 23745 17.7		Ate		**2130503**	[o] 21305 16		
C 30 CDI AMG (203.218)	01/03→08/07	170 / 231	Bre	epad	**2374581**	[o] 23745 17.7		Ate	epad	**2130581**	[o] 21305 15.5		
C 32 AMG Kompressor (203.265)	03/01→08/07	260 / 354											
C 55 AMG (203.276)	02/04→08/07	270 / 367			**98024701**	L95			PRO	**92137203**	ø 300 x 22 x 53.6		
			Bre		**82075200**					**TPM0002**			
			Bre		**82504700**					**91057100**	ø 164 x 20		
				PRO	**92123703**	ø 345 x 30 x 46.5				**97034500**			
					TPM0002								
		384800	Bre		**2374502**	[o] 23745 17.7	⊕ sport pack. ⊕ AMG sport pack.	Ate		**2189803**	[o] 21898 15.7		
C 320 CDI (203.220)	06/05→08/07	165 / 224	Bre	epad	**2374581**	[o] 23745 17.7	⊕ sport pack. ⊕ AMG sport pack.	Ate	epad	**2189881**	[o] 21898 15.7		
			Bre		**2394501**	[o] 23945 16.5	⊖ sport pack. ⊖ AMG sport pack.	Ate		**82501300**			
					98024701	L95			PRO	**92072703**	ø 290 x 10 x 55.2		
			Bre		**82075200**		⊖ sport pack. ⊖ AMG sport pack.			**TPM0002**			
			Bre		**82504700**		⊕ sport pack. ⊕ AMG sport pack.			**91057100**	ø 164 x 20		
					92151000	ø 330 x 28 x 46.5	⊖ sport pack. ⊖ AMG sport pack.			**97034500**			
				PRO	**92151003**	ø 330 x 28 x 46.5	⊖ sport pack. ⊖ AMG sport pack.						
				PRO	**92123703**	ø 345 x 30 x 46.5	⊕ sport pack. ⊕ AMG sport pack.						
					TPM0002								
		384900	Luc		**2314402**	[o] 23144 19.8	⊖ sport pack. ⊖ AMG sport pack. ⊕ J ⊕ USA ⊕ AUS	Ate		**2189803**	[o] 21898 15.7		
C 350 (203.256)	01/05→08/07	200 / 272	Luc	epad	**2314482**	[o] 23144 19.8	⊖ sport pack. ⊖ AMG sport pack. ⊕ J ⊕ USA ⊕ AUS	Ate	epad	**2189881**	[o] 21898 15.7		
			Bre		**2374502**	[o] 23745 17.7	⊕ sport pack. ⊕ AMG sport pack.	Ate		**82501300**			
			Bre	epad	**2374581**	[o] 23745 17.7	⊕ sport pack. ⊕ AMG sport pack.		PRO	**92072703**	ø 290 x 10 x 55.2		
			Bre		**2394501**	[o] 23945 16.5	⊖ sport pack. ⊖ AMG sport pack. ⊖ J ⊖ USA ⊖ AUS			**TPM0002**			
					98024701	L95				**91057100**	ø 164 x 20		
			Gir		**82059500**		⊖ sport pack. ⊖ AMG sport pack. ⊕ J ⊕ USA ⊕ AUS			**97034500**			
			Bre		**82075200**		⊕ sport pack. ⊕ AMG sport pack.						
			Bre		**82504700**		⊕ sport pack. ⊕ AMG sport pack.						

		kW / hp											
C-CLASS T-Model (S203) 03/01→08/07													
384900			Luc		82063500		⊕ J ⊕ USA ⊕ AUS						
C 350 (203.256)	01/05→08/07	200 / 272			92151000	ø 330 x 28 x 46.5	⊖ sport pack. ⊖ AMG sport pack.						
				PRO	92106003	ø 300 x 28 x 46.5	⊖ sport pack. ⊖ AMG sport pack. ⊕ J ⊕ USA ⊕ AUS						
				PRO	92106005	ø 300 x 28 x 46.5	⊖ sport pack. ⊖ AMG sport pack. ⊕ J ⊕ USA ⊕ AUS						
				PRO	92151003	ø 330 x 28 x 46.5	⊖ sport pack. ⊖ AMG sport pack.						
				PRO	92123703	ø 345 x 30 x 46.5	⊕ sport pack. ⊕ AMG sport pack.						
					TPM0002								
385000			Bre		2374502	[o] 23745 17.7		Ate		2130503	[o] 21305 16	⊖ sport pack. ⊖ AMG sport pack. ⊖ J ⊖ USA	
C 350 4-matic (203.287)	01/05→08/07	200 / 272	Bre	epad	2374581	[o] 23745 17.7		Ate	epad	2130581	[o] 21305 15.5	⊖ sport pack. ⊖ AMG sport pack. ⊖ J ⊖ USA	
					98024701	L95		Ate		2189803	[o] 21898 15.7	⊕ sport pack. ⊕ AMG sport pack. ⊕ J ⊕ USA	
			Bre		82075200			Ate	epad	2189881	[o] 21898 15.7	⊕ sport pack. ⊕ AMG sport pack. ⊕ J ⊕ USA	
			Bre		82504700			Ate		82501300		⊕ sport pack. ⊕ AMG sport pack. ⊕ J ⊕ USA	
					92123600	ø 345 x 30 x 46.5	⊖ sport pack. ⊖ AMG sport pack.		PRO	92137203	ø 300 x 22 x 53.6		
				PRO	92123603	ø 345 x 30 x 46.5	⊖ sport pack. ⊖ AMG sport pack.			TPM0002			
				PRO	92123703	ø 345 x 30 x 46.5	⊕ sport pack. ⊕ AMG sport pack.			91057100	ø 164 x 20		
					TPM0002					97034500			
C-CLASS T-Model (S204) 08/07→													
385100			Luc		2430602	[o] 24306 20.6	⊖ AMG sport pack. ⊖ sport pack.	Ate		2425301	[o] 24253 17.9		
C 180 CDI (204.200)	01/11→	88 / 120											
C 200 CDI (204.201)	08/10→	100 / 136											
C 200 CDI (204.207)	08/07→	100 / 136	Luc		2430603	[o] 24306 20.6	⊕ AMG sport pack. ⊕ sport pack.	Ate	epad	2425381	[o] 24253 17.9		
			Luc	epad	2430682	[o] 24306 20.6	⊖ AMG sport pack. ⊖ sport pack.	Ate		82062900			
					98024701	L95		Ate		82503500			
			Luc		82054100		⊖ AMG sport pack. ⊖ sport pack.		PRO	92163103	ø 278 x 9 x 57.5	⊖ AMG sport pack. ⊖ sport pack.	
			Luc		82073300		⊕ AMG sport pack. ⊕ sport pack.		PRO	92163303	ø 300 x 10 x 57.5	⊕ AMG sport pack. ⊕ sport pack.	
				PRO	92159603	ø 288 x 25 x 64.5	⊖ AMG sport pack. ⊖ sport pack.			TPM0002			
				PRO	92165003	ø 295 x 28 x 64.5	⊕ AMG sport pack. ⊕ sport pack.			91066900	ø 164 x 25		
					TPM0002					97038300			
385200			Luc		2430601	[o] 24306 20.6	⊖ AMG sport pack. ⊖ sport pack. ⊕ TJ-made	Ate		2425301	[o] 24253 17.9		
C 180 CGI (204.231)	02/12→	115 / 156	Luc		2430602	[o] 24306 20.6	⊖ AMG sport pack. ⊖ sport pack.	Ate	epad	2425381	[o] 24253 17.9		
			Luc		2430603	[o] 24306 20.6	⊕ AMG sport pack. ⊕ sport pack.	Ate		82503500			
			Luc	epad	2430681	[o] 24306 20.6	⊖ AMG sport pack. ⊖ sport pack. ⊕ TJ-made		PRO	92163103	ø 278 x 9 x 57.5	⊖ AMG sport pack. ⊖ sport pack.	
			Luc	epad	2430682	[o] 24306 20.6	⊖ AMG sport pack. ⊖ sport pack.		PRO	92163303	ø 300 x 10 x 57.5	⊕ AMG sport pack. ⊕ sport pack. ⊕ TJ-made	
					98024701	L95				TPM0002			
				PRO	92163203	ø 295 x 28 x 64.5	⊖ AMG sport pack. ⊖ sport pack. ⊕ TJ-made			91066900	ø 164 x 25		
				PRO	92165003	ø 295 x 28 x 64.5	⊕ AMG sport pack. ⊕ sport pack.						
					TPM0002								
385300			Luc		2430602	[o] 24306 20.6	⊖ AMG sport pack. ⊖ sport pack.	Ate		2425301	[o] 24253 17.9		
C 180 CGI (204.249)	11/09→	115 / 156											
C 180 Kompressor (204.245)	01/08→	115 / 156											
C 180 Kompressor (204.246)	08/07→	115 / 156	Luc		2430603	[o] 24306 20.6	⊕ AMG sport pack. ⊕ sport pack.	Ate	epad	2425381	[o] 24253 17.9		
			Luc	epad	2430682	[o] 24306 20.6	⊖ AMG sport pack. ⊖ sport pack.			98024701	L95		
					98024701	L95		Ate		82062900			
			Luc		82054100		⊖ AMG sport pack. ⊖ sport pack.	Ate		82503500			

			30	kW / hp											
C-CLASS T-Model (S204) 08/07→															
		385300	Luc		**82073300**		⊕ AMG sport pack. ⊕ sport pack.			PRO	**92163103**	ø 278 x 9 x 57.5	⊖ AMG sport pack. ⊖ sport pack.
C 180 CGI (204.249)	11/09→	115 / 156		PRO	**92159603**	ø 288 x 25 x 64.5	⊖ AMG sport pack. ⊖ sport pack.			PRO	**92163303**	ø 300 x 10 x 57.5	⊕ AMG sport pack. ⊕ sport pack.
C 180 Kompressor (204.245)	01/08→	115 / 156		PRO	**92165003**	ø 295 x 28 x 64.5	⊕ AMG sport pack. ⊕ sport pack.				**TPM0002**		
C 180 Kompressor (204.246)	08/07→	115 / 156			**TPM0002**						**91066900**	ø 164 x 25	
											97038300		
		385400	Luc		**2430601**	[o] 24306 20.6	⊖ AMG sport pack. ⊖ sport pack.	Ate			**2425301**	[o] 24253 17.9	
C 200 CGI (204.248)	08/07→	135 / 184											
C 200 Kompressor (204.241)	08/07→	135 / 184	Luc		**2430603**	[o] 24306 20.6	⊕ AMG sport pack. ⊕ sport pack.	Ate		epad	**2425381**	[o] 24253 17.9	
C 220 CDI	08/07→	120 / 163											
C 220 CDI (204.202)	12/08→	125 / 170											
C 220 CDI (204.208)	08/07→	125 / 170	Luc	epad	**2430681**	[o] 24306 20.6	⊖ AMG sport pack. ⊖ sport pack.				**98024701**	L95	
C 220 CDI 4-matic (204.284)	02/13→	125 / 170											
C 230 (204.252)	08/07→	150 / 204			**98024701**	L95		Ate			**82062900**		
C 250 CDI (204.203)	01/09→	150 / 204											
C 250 CGI (204.247)	07/09→	150 / 204	Luc		**82073300**		⊕ AMG sport pack. ⊕ sport pack.	Ate			**82503500**		
				PRO	**92163203**	ø 295 x 28 x 64.5	⊖ AMG sport pack. ⊖ sport pack.			PRO	**92163303**	ø 300 x 10 x 57.5	
				PRO	**92165003**	ø 295 x 28 x 64.5	⊕ AMG sport pack. ⊕ sport pack.				**TPM0002**		
					TPM0002						**91066900**	ø 164 x 25	
											97038300		
		385500	Luc		**2430601**	[o] 24306 20.6	⊖ AMG perf. pack. ⊖ sport pack.	Ate			**2425301**	[o] 24253 17.9	
C 220 CDI	08/07→	120 / 163											
			Luc		**2430603**	[o] 24306 20.6	⊕ AMG perf. pack. ⊕ sport pack.	Ate		epad	**2425381**	[o] 24253 17.9	
			Luc	epad	**2430681**	[o] 24306 20.6	⊖ AMG perf. pack. ⊖ sport pack.				**98024701**	L95	
					98024701	L95		Ate			**82062900**		
			Luc		**82073300**		⊕ AMG sport pack. ⊕ sport pack.	Ate			**82503500**		
				PRO	**92163203**	ø 295 x 28 x 64.5	⊖ AMG perf. pack. ⊖ sport pack.			PRO	**92163303**	ø 300 x 10 x 57.5	
				PRO	**92165003**	ø 295 x 28 x 64.5	⊕ AMG perf. pack. ⊕ sport pack.				**TPM0002**		
					TPM0002						**91066900**	ø 164 x 25	
											97038300		
		385600	Luc		**2430601**	[o] 24306 20.6	⊖ AMG sport pack. ⊖ sport pack.	Ate			**2425301**	[o] 24253 17.9	alumin. call.
C 250 CDI 4-matic (204.282)	04/10→	150 / 204											
			Luc	epad	**2430681**	[o] 24306 20.6	⊖ AMG sport pack. ⊖ sport pack.	Ate		epad	**2425381**	[o] 24253 17.9	alumin. call.
			Luc		**2431001**	[o] 24310 19.4	⊕ AMG sport pack. ⊕ sport pack.	Ate			**2425401**	[o] 24254 17.9	cast iron call.
			Luc	epad	**2431081**	[o] 24310 19.4	⊕ AMG sport pack. ⊕ sport pack.	Ate		epad	**2425481**	[o] 24254 17.9	cast iron call.
					98024701	L95					**98024701**	L95	
				PRO	**92163203**	ø 295 x 28 x 64.5	⊖ AMG sport pack. ⊖ sport pack.	Ate			**82062900**		
				PRO	**92163403**	ø 322 x 32 x 64.5	⊕ AMG sport pack. ⊕ sport pack.	Ate			**82503500**		
					TPM0002					PRO	**92163303**	ø 300 x 10 x 57.5	⊕ AMG sport pack. ⊕ sport pack.
											92163600	ø 300 x 22 x 57.1	⊖ AMG sport pack. ⊖ sport pack.
										PRO	**92163603**	ø 300 x 22 x 57.1	⊖ AMG sport pack. ⊖ sport pack.
											TPM0002		
											91066900	ø 164 x 25	
											97038300		
		385700	Luc		**2430601**	[o] 24306 20.6	⊖ AMG sport pack. ⊖ sport pack.	Ate			**2425301**	[o] 24253 17.9	
C 280 (204.254)	08/07→	170 / 231											
			Luc	epad	**2430681**	[o] 24306 20.6	⊖ AMG sport pack. ⊖ sport pack.	Ate		epad	**2425381**	[o] 24253 17.9	
			Luc		**2431001**	[o] 24310 19.4	⊕ AMG sport pack. ⊕ sport pack.				**98024701**	L95	
			Luc	epad	**2431081**	[o] 24310 19.4	⊕ AMG sport pack. ⊕ sport pack.	Ate			**82062900**		

C-CLASS T-Model (S204) 08/07→

		kW / hp												
C 280 (204.254)	08/07→	385700 170 / 231		98024701	L95			Ate		82503500			
				92163203	ø 295 x 28 x 64.5	⊖ AMG sport pack. ⊖ sport pack.			92163303	ø 300 x 10 x 57.5		
				92163403	ø 322 x 32 x 64.5	⊕ AMG sport pack. ⊕ sport pack.			TPM0002			
				TPM0002					91066900	ø 164 x 25		
									97038300			
C 300	08/07→	385800 170 / 231	Luc	2431001	[o] 24310 19.4			Ate	2425301	[o] 24253 17.9		
			Luc epad	2431081	[o] 24310 19.4			Ate epad	2425381	[o] 24253 17.9		
				98024701	L95			Ate	2425401	[o] 24254 17.9		
			Luc	82518300				Ate epad	2425481	[o] 24254 17.9		
				92163500	ø 322 x 32 x 64.5	vented disc ⊖ AMG perf. pack. ⊖ sport pack.			98024701	L95		
				92163503	ø 322 x 32 x 64.5	vented disc ⊖ AMG perf. pack. ⊖ sport pack.		Ate	82062900			
				92163403	ø 322 x 32 x 64.5	vented disc ⊕ AMG perf. pack. ⊕ sport pack.		Ate	82503500			
				TPM0002					92163600	ø 300 x 22 x 57.1		
									92163603	ø 300 x 22 x 57.1		
									TPM0002			
									91066900	ø 164 x 25		
									97038300			
C 320 CDI (204.222)	08/07→	385900 165 / 224	Luc	2431001	[o] 24310 19.4			Ate	2425301	[o] 24253 17.9	alumin. call.	
C 320 CDI 4-matic (204.289)	08/07→	165 / 224										
C 350 (204.256)	08/07→	200 / 272	Luc epad	2431081	[o] 24310 19.4			Ate epad	2425381	[o] 24253 17.9	alumin. call.	
C 350 CDI	08/07→	165 / 224										
C 350 CDI (204.225)	10/09→	170 / 231		98024701	L95			Ate	2425401	[o] 24254 17.9	cast iron call.	
C 350 CDI 4-matic (204.292)	10/09→	170 / 231		92163500	ø 322 x 32 x 64.5	⊖ AMG sport pack. ⊖ sport pack.		Ate epad	2425481	[o] 24254 17.9	cast iron call.	
				92163503	ø 322 x 32 x 64.5	⊖ AMG sport pack. ⊖ sport pack.			98024701	L95		
				92163403	ø 322 x 32 x 64.5	⊕ AMG sport pack. ⊕ sport pack.		Ate	82062900			
				TPM0002				Ate	82503500			
									92163600	ø 300 x 22 x 57.1		
									92163603	ø 300 x 22 x 57.1		
									TPM0002			
									91066900	ø 164 x 25		
									97038300			
C 350 CDI (204.223)	06/11→	386000 195 / 265	Luc	2431001	[o] 24310 19.4			Ate	2425301	[o] 24253 17.9		
			Luc epad	2431081	[o] 24310 19.4			Ate epad	2425381	[o] 24253 17.9		
				98024701	L95				98024701	L95		
				92163500	ø 322 x 32 x 64.5	⊖ sport pack. ⊖ AMG sport pack. A053415→		Ate	82062900			
				92163503	ø 322 x 32 x 64.5	⊖ sport pack. ⊖ AMG sport pack. A053415→		Ate	82503500			
				92163403	ø 322 x 32 x 64.5	⊕ sport pack. ⊕ AMG sport pack.			92163600	ø 300 x 22 x 57.1		
				TPM0002					92163603	ø 300 x 22 x 57.1		
									TPM0002			
									91066900	ø 164 x 25		
									97038300			
C 350 CGI (204.257)	06/11→	386100 225 / 306	Luc	2431001	[o] 24310 19.4			Ate	2425301	[o] 24253 17.9		

		kW / hp										
C-CLASS T-Model (S204) 08/07→												
386100			Luc	2431081	[o] 24310 19.4		Ate	2425381	[o] 24253 17.9			
C 350 CGI (204.257)	06/11→	225 / 306		98024701	L95			98024701	L95			
				92163500	ø 322 x 32 x 64.5	⊖ AMG sport pack. ⊖ sport pack.	Ate	82062900				
				92163503	ø 322 x 32 x 64.5	⊖ AMG sport pack. ⊖ sport pack.	Ate	82503500				
				92163403	ø 322 x 32 x 64.5	⊕ AMG sport pack. ⊕ sport pack.		92163600	ø 300 x 22 x 57.1			
				TPM0002				92163603	ø 300 x 22 x 57.1			
								TPM0002				
								91066900	ø 164 x 25			
								97038300				
386200				98036401	L98			98036401	L98			
C 63 AMG	07/10→	382 / 520		TPM0002				TPM0002				
C 63 AMG	06/13→	373 / 507						91066900	ø 164 x 25			
C 63 AMG (204.277)	02/08→	336 / 457						97038300				
C 63 AMG (204.277)	01/12→	358 / 487										
C-CLASS T-Model (S205) 09/14→												
386300				98048700	L93			98048700	L93			
C 180 (205.240)	09/14→	115 / 156		TPM0002				TPM0002				
C 180 BlueTEC (205.236)	09/14→	85 / 116										
C 200 (205.242)	09/14→	135 / 184										
C 200 BlueTEC (205.237)	09/14→	100 / 136										
C 220 BlueTEC (205.204)	09/14→	125 / 170										
C 250 (205.245)	09/14→	155 / 211										
C 250 BlueTEC (205.208)	09/14→	150 / 204										
CITAN Box (415) 11/12→												
386400			Luc	2397301	[–] 23973 17.3	⊕ steel rim ⊕ rim size 14"	TRW	2469204	[–] 24692 16	⊕ rim size 15" rim size 16"		
108 CDI (415.601, 415.603)	11/12→	55 / 75	Bos	2469301	[–] 24693 18.7	⊕ rim size 15" rim size 16" ⊕ cold clima		91069300	ø 228.6 x 42	⊕ rim size 14"		
			Luc	82072200			Bos	97010100		⊕ rim size 14" rim size 15"		
				92202400	ø 280 x 24 x 44	⊕ rim size 15" rim size 16" 2013-01-25→ ⊕ RO ⊕ TR ⊕ RUS ⊕ Scand.						
				92257903	ø 280 x 26 x 45	⊕ rim size 15" rim size 16" →2013-01-25 ⊕ Scand. ⊕ RO ⊕ RUS ⊕ TR						
386500			Luc	2397301	[–] 23973 17.3	⊕ steel rim ⊕ rim size 14"	TRW	2469204	[–] 24692 16	⊕ rim size 15" rim size 16"		
109 CDI (415.601, 415.603, 415.605)	11/12→	66 / 90	Bos	2469301	[–] 24693 18.7	⊕ rim size 15" rim size 16" ⊕ cold clima		91069300	ø 228.6 x 42	⊕ rim size 14"		
			Luc	82054100		⊕ mild clima	Bos	97010100		⊕ rim size 14" rim size 15"		
			Luc	82072200								
				92202400	ø 280 x 24 x 44	⊕ rim size 15" rim size 16" 2013-01-25→ ⊕ RO ⊕ TR ⊕ RUS ⊕ Scand.						
				92257903	ø 280 x 26 x 45	⊕ rim size 15" rim size 16" →2013-01-25 ⊕ Scand. ⊕ RO ⊕ RUS ⊕ TR						
386600			Luc	2397301	[–] 23973 17.3	⊕ steel rim ⊕ rim size 14"	TRW	2469204	[–] 24692 16	⊕ rim size 15" rim size 16"		
111 CDI (415.603, 415.605)	06/13→	81 / 110	Bos	2469301	[–] 24693 18.7	⊕ rim size 15" rim size 16" ⊕ cold clima		91069300	ø 228.6 x 42	⊕ rim size 14"		
			Luc	82054100		⊕ mild clima	Bos	97010100		⊕ rim size 14" rim size 15"		
			Luc	82072200								
				92202400	ø 280 x 24 x 44	⊕ rim size 15" rim size 16" 2013-01-25→ ⊕ RO ⊕ TR ⊕ RUS ⊕ Scand.						
386700			Luc	2397301	[–] 23973 17.3	⊕ steel rim ⊕ rim size 14"	TRW	2469204	[–] 24692 16	⊕ rim size 15" rim size 16"		
112 (415.603)	06/13→	84 / 114	Bos	2469301	[–] 24693 18.7	⊕ rim size 15" rim size 16" ⊕ cold clima		91069300	ø 228.6 x 42	⊕ rim size 14"		
			Luc	82072200			Bos	97010100		⊕ rim size 14" rim size 15"		
				92202400	ø 280 x 24 x 44	⊕ rim size 15" rim size 16" 2013-01-25→ ⊕ RO ⊕ TR ⊕ RUS ⊕ Scand.						

		kW / hp											
CITAN Combi (415) 11/12→													
		386800	Luc		2397301	[–] 23973 17.3	⊕ steel rim ⊕ rim size 14"	TRW		2469204	[–] 24692 16	⊕ rim size 15" rim size 16"
108 CDI (415.703)	11/12→	55 / 75	Bos		2469301	[–] 24693 18.7	⊕ rim size 15" rim size 16" ⊕ cold clima			91069300	ø 228.6 x 42	⊕ rim size 14"
109 CDI (415.703)	11/12→	66 / 90	Luc		82072200			Bos		97010100		⊕ rim size 14" rim size 15"
					92202400	ø 280 x 24 x 44	⊕ rim size 15" rim size 16" 2013-01-25→ ⊕ RO ⊕ TR ⊕ RUS ⊕ Scand.					
				PRO	92257903	ø 280 x 26 x 45	⊕ rim size 15" rim size 16" →2013-01-25 ⊕ Scand. ⊕ RO ⊕ RUS ⊕ TR					
		386900	Luc		2397301	[–] 23973 17.3	⊕ steel rim ⊕ rim size 14"	TRW		2469204	[–] 24692 16	⊕ rim size 15" rim size 16"
111 CDI (415.703)	06/13→	81 / 110	Bos		2469301	[–] 24693 18.7	⊕ rim size 15" rim size 16" ⊕ cold clima			91069300	ø 228.6 x 42	⊕ rim size 14"
112 (415.703)	06/13→	84 / 114	Luc		82072200			Bos		97010100		⊕ rim size 14" rim size 15"
					92202400	ø 280 x 24 x 44	⊕ rim size 15" rim size 16" 2013-01-25→ ⊕ RO ⊕ TR ⊕ RUS ⊕ Scand.					
CITAN Kasten (415) 11/12→ → CITAN Box (415), Page 600													
CITAN Kombi (415) 11/12→ → CITAN Combi (415), Page 601													
CITAN Panel Van (415) 11/12→ → CITAN Box (415), Page 600													
CITAN Tila-Auto (415) 11/12→ → CITAN Combi (415), Page 601													
CITAN Traveliner (415) 11/12→ → CITAN Combi (415), Page 601													
C-KLASSE (W202) 03/93→05/00 → C-CLASS (W202), Page 578													
C-KLASSE (W203) 05/00→02/07 → C-CLASS (W203), Page 579													
C-KLASSE (W204) 01/07→ → C-CLASS (W204), Page 584													
C-KLASSE (W205) 12/13→ → C-CLASS (W205), Page 588													
C-KLASSE Coupe (C204) 06/11→ → C-CLASS Coupe (C204), Page 588													
C-KLASSE Kombi (S202) 06/96→03/01 → C-CLASS Estate (S202), Page 592													
C-KLASSE Kombi (S203) 03/01→08/07 → C-CLASS T-Model (S203), Page 593													
C-KLASSE Kombi (S204) 08/07→ → C-CLASS T-Model (S204), Page 597													
C-KLASSE Kombi (S205) 09/14→ → C-CLASS T-Model (S205), Page 600													
C-KLASSE Sportcoupe (CL203) 03/01→05/08 → C-CLASS Coupe (CL203), Page 591													
CLA Coupe (C117) 01/13→													
		387000	TRW		2486901	[o] 24869 19		TRW		2484801	[o] 24848 18.4	
CLA 180 (117.342)	01/13→	90 / 122			98048700	L93			PRO	92254903	ø 295 x 10 x 42.7	
CLA 180 CDI (117.312)	10/13→	80 / 109		PRO	92241603	ø 295 x 28 x 51.1	⊖ AMG sport pack. ⊖ sport pack.			TPM0002		
CLA 200 (117.343)	01/13→	115 / 156		PRO	92257503	ø 295 x 28 x 51.2	⊕ AMG sport pack. ⊕ sport pack.					
CLA 200 CDI (117.301)	06/13→	100 / 136			TPM0002							
		387100	TRW		2486901	[o] 24869 19			PRO	92254903	ø 295 x 10 x 42.7	
CLA 200 CDI (117.308)	07/14→	100 / 136			98048700	L93				TPM0002		
				PRO	92241603	ø 295 x 28 x 51.1	⊖ AMG sport pack. ⊖ sport pack.					
				PRO	92257503	ø 295 x 28 x 51.2	⊕ AMG sport pack. ⊕ sport pack.					
					TPM0002							
		387200	TRW		2486901	[o] 24869 19				TPM0002		
CLA 200 CDI 4-matic (117.302)	07/14→	100 / 136			98048700	L93						
				PRO	92241603	ø 295 x 28 x 51.1	⊖ AMG sport pack. ⊖ sport pack.					
				PRO	92257503	ø 295 x 28 x 51.2	⊕ AMG sport pack.					
					TPM0002							
		387300	TRW		2486901	[o] 24869 19		TRW		2484801	[o] 24848 18.4	
CLA 220 CDI (117.303)	01/13→	120 / 163			98048700	L93			PRO	92254903	ø 295 x 10 x 42.7	
CLA 220 CDI (177.303)	01/13→	125 / 170		PRO	92254803	ø 295 x 28 x 51.1	⊖ AMG sport pack. ⊖ sport pack.			TPM0002		

		kW / hp											
CLA Coupe (C117) 01/13→													
387300				92257503	ø 295 x 28 x 51.2	⊕ sport pack.							
CLA 220 CDI (117.303)	01/13→	120 / 163		92262103	ø 320 x 30 x 51	⊕ AMG sport pack. ⊖ sport pack.							
CLA 220 CDI (177.303)	01/13→	125 / 170		TPM0002									
387400			TRW	2486901	[o] 24869 19				92254903	ø 295 x 10 x 42.7	→2014-07-18		
CLA 220 CDI 4-matic	08/14→	120 / 163		98048700	L93				TPM0002				
				92254803	ø 295 x 28 x 51.1	⊖ AMG sport pack. ⊖ sport pack.							
				92257503	ø 295 x 28 x 51.2	⊕ sport pack.							
				92262103	ø 320 x 30 x 51	⊕ AMG sport pack.							
				TPM0002									
387500			TRW	2486901	[o] 24869 19				92254903	ø 295 x 10 x 42.7			
CLA 220 CDI 4-matic (117.305)	07/14→	125 / 170		98048700	L93				TPM0002				
				92254803	ø 295 x 28 x 51.1	⊖ AMG sport pack. ⊖ sport pack.							
				92257503	ø 295 x 28 x 51.2	⊕ sport pack.							
				92262103	ø 320 x 30 x 51	⊕ AMG sport pack. ⊖ sport pack.							
				TPM0002									
387600			TRW	2486901	[o] 24869 19		TRW		2484801	[o] 24848 18.4			
CLA 250 (117.344)	01/13→	155 / 211		98048700	L93				92254903	ø 295 x 10 x 42.7			
				92258003	ø 320 x 30 x 51.1	⊖ AMG sport pack. ⊖ sport pack.			TPM0002				
				92262103	ø 320 x 30 x 51	⊕ AMG sport pack. ⊕ sport pack.							
				TPM0002									
387700			TRW	2486901	[o] 24869 19				92254903	ø 295 x 10 x 42.7			
CLA 250 4-matic (117.344)	07/13→	155 / 211		98048700	L93				TPM0002				
				92258003	ø 320 x 30 x 51.1	⊖ AMG sport pack. ⊖ sport pack.							
				92262103	ø 320 x 30 x 51	⊕ AMG sport pack. ⊕ sport pack.							
				TPM0002									
387800				98048700	L93		TRW		2521501	[o] 25215 18.7			
CLA 45 AMG 4-matic (117.352)	07/13→	265 / 360		TPM0002					TPM0002				
CLASE V (W447) 03/14→ → V-CLASS (W447), Page 700													
CLASSE V (W447) 03/14→ → V-CLASS (W447), Page 700													
CLASSE C Coupe Sport (CL203) 03/01→05/08 → C-CLASS Coupe (CL203), Page 591													
CLASSE C Sportcoupe (CL203) 03/01→05/08 → C-CLASS Coupe (CL203), Page 591													
CLC-CLASS (CL203) 05/08→06/11													
387900			Luc	2314401	[o] 23144 19.8		Ate		2191901	[–] 21919 15.3			
CLC 160 (203.731)	02/09→06/11	95 / 129											
CLC 180 Kompressor (203.746)	05/08→06/11	105 / 143	Luc	2314481	[o] 23144 19.8		Ate		2191981	[–] 21919 15.3			
CLC 200 CDI (203.707)	05/08→06/11	90 / 122											
CLC 200 Kompressor (203.741)	05/08→06/11	135 / 184		98024701	L95		Ate		82500000				
CLC 220 CDI (203.708)	05/08→06/11	110 / 150	Luc	82055400					92032703	ø 278 x 9 x 53.5			
			Luc	82063500					TPM0002				
				92105903	ø 288 x 25 x 46.5				91057100	ø 164 x 20			
				TPM0002					97034500				
388000			Luc	2314402	[o] 23144 19.8		Ate		2189803	[o] 21898 15.7			
CLC 230 (203.752)	05/08→06/11	150 / 204	Luc	2314482	[o] 23144 19.8		Ate		2189881	[o] 21898 15.7			

		kW / hp												
CLC-CLASS (CL203) 05/08→06/11														
		388000												
CLC 230 (203.752)	05/08→06/11	150 / 204			98024701	L95			Ate		82501300			
			Gir		82059500					PRO	92072703	ø 290 x 10 x 55.2		
			Luc		82063500						TPM0002			
				PRO	92106003	ø 300 x 28 x 46.5					91057100	ø 164 x 20		
				PRO	92106005	ø 300 x 28 x 46.5					97034500			
					TPM0002									
		388100												
CLC 350 (203.756)	05/08→06/11	200 / 272	Bre		2394501	[o] 23945 16.5			Ate		2189803	[o] 21898 15.7		
					98024701	L95			Ate	epad	2189881	[o] 21898 15.7		
			Bre		82075200				Ate		82501300			
					92151000	ø 330 x 28 x 46.5				PRO	92072703	ø 290 x 10 x 55.2		
				PRO	92151003	ø 330 x 28 x 46.5					TPM0002			
					TPM0002						91057100	ø 164 x 20		
											97034500			
CLC-KLASSE (CL203) 05/08→06/11 → CLC-CLASS (CL203), Page 602														
CL-CLASS Coupe (C140) 09/92→02/99 → S-CLASS Coupe (C140), Page 676														
CL-CLASS Coupe (C215) 03/99→08/06 → S-CLASS Coupe (C215), Page 676														
CLK (C208) 06/97→07/02														
		388200	Ate		2166404	[o] 21664 19.8			Ate		2191903	[–] 21919 15.7		
200 (208.335)	06/97→06/02	100 / 136												
200 Kompressor (208.344)	06/00→06/02	120 / 163	Ate	epad	2166481	[o] 21664 19.8			Ate		82058800			
200 Kompressor (208.345)	06/97→06/00	141 / 192			98021300	L90				PRO	92032703	ø 278 x 9 x 53.5		
230 Kompressor (208.347)	06/97→06/00	142 / 193	Ate		82032000						TPM0001			
230 Kompressor (208.348)	06/00→06/02	145 / 197	Ate		82062900						91032800	ø 164 x 20		
				PRO	92105903	ø 288 x 25 x 46.5					97011600			
					TPM0001									
		388300	Ate		2167001	[o] 21670 20.3			Ate		2130504	[o] 21305 15.5	→F196683	
320 (208.365)	06/97→06/02	160 / 218	Ate	epad	2167081	[o] 21670 20.3			Ate	epad	2130581	[o] 21305 15.5	→F196683	
					98021300	L90			Ate		2189801	[o] 21898 15.7	F196684→	
			Ate		82032000				Ate	epad	2189881	[o] 21898 15.7	F196684→	
			Ate		82062900				Ate		82046000			
				PRO	92106003	ø 300 x 28 x 46.5				PRO	92072703	ø 290 x 10 x 55.2		
				PRO	92106005	ø 300 x 28 x 46.5					TPM0001			
					TPM0001						91032800	ø 164 x 20		
											97011600			
		388400	Ate		2115307	[o] 21153 17.5	⊖ AUS →F129678		Ate		2130504	[o] 21305 15.5		
430 (208.370)	07/98→06/02	205 / 279	Ate		2148401	[o] 21484 20.8	⊖ AUS F129679→		Ate	epad	2130581	[o] 21305 15.5		
			Ate		2167001	[o] 21670 20.3	⊕ AUS		Ate		82046000			
			Ate	epad	2167081	[o] 21670 20.3	⊕ AUS			PRO	92072703	ø 290 x 10 x 55.2	→F129678	
					98021300	L90	⊕ AUS ⊖ AUS →F129678			PRO	92137203	ø 300 x 22 x 53.6	F129679→	
					98030800	L74	⊖ AUS F129679→				TPM0001			
			Ate		82500500		⊖ AUS →F129678				91032800	ø 164 x 20		
			Ate		82032000		⊖ AUS				97011600			

kW / hp

CLK (C208) 06/97→07/02

388400													
430 (208.370)	07/98→06/02	205 / 279	Ate		82059200		⊖ AUS F129679→						
			Ate		82062900								
					92073100	ø 316 x 28 x 46.5	⊖ AUS →F129678						
				PRO	92106003	ø 300 x 28 x 46.5	⊕ AUS						
				PRO	92106005	ø 300 x 28 x 46.5	⊕ AUS						
				PRO	92181903	ø 330 x 32 x 47	⊖ AUS F129679→						
					TPM0001								
388500													
5.4	10/98→07/02	260 / 354	Ate		2148401	[o] 21484 20.8		Ate		2130503	[o] 21305 16	
55 AMG (208.374)	08/99→06/02	255 / 347			98030800	L74		Ate	epad	2130581	[o] 21305 15.5	
			Ate		82059200			Ate		82046000		
			Ate		82062900				PRO	92137203	ø 300 x 22 x 53.6	⊖ AUS
					TPM0001					TPM0001		
										91032800	ø 164 x 20	
										97011600		

CLK (C209) 06/02→05/09

388600													
200 CGI (209.343)	07/03→05/09	125 / 170	Luc		2314401	[o] 23144 19.8	⊖ AMG sport pack. ⊖ sport pack.	Ate		2191901	[–] 21919 15.3	⊖ AMG sport pack. ⊖ sport pack.
200 Kompressor (209.342)	09/02→05/09	120 / 163	Luc	epad	2314481	[o] 23144 19.8	⊖ AMG sport pack. ⊖ sport pack.	Ate	epad	2191981	[–] 21919 15.3	⊖ AMG sport pack. ⊖ sport pack.
220 CDI (209.308)	01/05→05/09	110 / 150	Bre		2394501	[o] 23945 16.5	⊕ AMG sport pack. ⊕ sport pack.	Ate		2189803	[o] 21898 15.7	⊕ AMG sport pack. ⊕ sport pack.
					98024701	L95		Ate	epad	2189881	[o] 21898 15.7	⊕ AMG sport pack. ⊕ sport pack.
			Luc		82055400		⊖ AMG sport pack. ⊖ sport pack.			98024701	L95	
			Bre		82504800		⊕ AMG sport pack. ⊕ sport pack.	Ate		82500000		⊖ AMG sport pack. ⊖ sport pack.
			Luc		82063500		⊖ AMG sport pack. ⊖ sport pack.	Ate		82501300		⊕ AMG sport pack. ⊕ sport pack.
				PRO	92105903	ø 288 x 25 x 46.5	⊖ AMG sport pack. ⊖ sport pack.		PRO	92032703	ø 278 x 9 x 53.5	⊖ AMG sport pack. ⊖ sport pack.
				PRO	92119803	ø 330 x 28 x 46.5	⊕ AMG sport pack. ⊕ sport pack.		PRO	92072703	ø 290 x 10 x 55.2	⊕ AMG sport pack. ⊕ sport pack.
					TPM0002					TPM0002		
										91057100	ø 164 x 20	
388700			Luc		2314402	[o] 23144 19.8	⊖ AMG sport pack. ⊖ sport pack.	Ate		2189803	[o] 21898 15.7	
200 Kompressor (209.341)	10/06→05/09	135 / 184										
270 CDI (209.316)	10/02→05/09	125 / 170	Luc	epad	2314482	[o] 23144 19.8	⊖ AMG sport pack. ⊖ sport pack.	Ate	epad	2189881	[o] 21898 15.7	
280 (209.354)	01/05→05/09	170 / 231	Bre		2394501	[o] 23945 16.5	⊕ AMG sport pack. ⊕ sport pack.			98024701	L95	
					98024701	L95		Ate		82501300		
			Luc		82055900		⊖ AMG sport pack. ⊖ sport pack.		PRO	92072703	ø 290 x 10 x 55.2	
			Bre		82504800		⊕ AMG sport pack. ⊕ sport pack.			TPM0002		
			Luc		82063500		⊖ AMG sport pack. ⊖ sport pack.			91057100	ø 164 x 20	
				PRO	92106003	ø 300 x 28 x 46.5	⊖ AMG sport pack. ⊖ sport pack.					
				PRO	92106005	ø 300 x 28 x 46.5	⊖ AMG sport pack. ⊖ sport pack.					
				PRO	92119803	ø 330 x 28 x 46.5	⊕ AMG sport pack. ⊕ sport pack.					
					TPM0002							
388800			Luc		2314401	[o] 23144 19.8	⊖ sport pack. ⊖ AMG sport pack.	Ate		2191901	[–] 21919 15.3	⊖ sport pack. ⊖ AMG sport pack.
220 CDI (209.308)	01/05→05/09	100 / 136	Luc	epad	2314481	[o] 23144 19.8	⊖ sport pack. ⊖ AMG sport pack.	Ate	epad	2191981	[–] 21919 15.3	⊖ sport pack. ⊖ AMG sport pack.
			Bre		2394501	[o] 23945 16.5	⊕ sport pack. ⊕ AMG sport pack.	Ate		2189803	[o] 21898 15.7	⊕ sport pack. ⊕ AMG sport pack.

→

kW / hp

CLK (C209) 06/02→05/09

388800														
220 CDI (209.308)	01/05→05/09	100 / 136			98024701	L95			Ate		2189881	[o] 21898 15.7	⊕ sport pack. ⊕ AMG sport pack.
				PRO	92105903	ø 288 x 25 x 46.5	⊖ sport pack. ⊖ AMG sport pack.			98024701	L95	
				PRO	92119803	ø 330 x 28 x 46.5	⊕ sport pack. ⊕ AMG sport pack.		PRO	92032703	ø 278 x 9 x 53.5	⊖ sport pack. ⊖ AMG sport pack.
					TPM0002				PRO	92072703	ø 290 x 10 x 55.2	⊕ sport pack. ⊕ AMG sport pack.
										TPM0002		
										91057100	ø 164 x 20	
388900													
240 (209.361)	06/02→05/09	120 / 163	Luc		2314402	[o] 23144 19.8			Ate		2189803	[o] 21898 15.7	
240 (209.361)	06/02→05/09	125 / 170											
320 (209.365)	06/02→05/09	160 / 218	Luc	epad	2314482	[o] 23144 19.8			Ate	epad	2189881	[o] 21898 15.7	
					98024701	L95					98024701	L95	
			Luc		82055900				Ate		82501300		
			Luc		82063500					PRO	92072703	ø 290 x 10 x 55.2	
				PRO	92106003	ø 300 x 28 x 46.5				TPM0002		
				PRO	92106005	ø 300 x 28 x 46.5				91057100	ø 164 x 20	
					TPM0002							
389000													
270 CDI (209.316)	02/03→06/05	120 / 163	Luc		2314402	[o] 23144 19.8	⊖ AMG perf. pack. ⊖ sport pack.		Ate		2189803	[o] 21898 15.7	
			Luc	epad	2314482	[o] 23144 19.8	⊖ AMG perf. pack. ⊖ sport pack.		Ate	epad	2189881	[o] 21898 15.7	
			Bre		2394501	[o] 23945 16.5	⊕ AMG perf. pack. ⊕ sport pack.				98024701	L95	
					98024701	L95			Ate		82501300		
			Luc		82055900		⊖ AMG perf. pack. ⊖ sport pack.			PRO	92072703	ø 290 x 10 x 55.2	
			Bre		82504800					TPM0002		
			Luc		82063500		⊖ AMG perf. pack. ⊖ sport pack.			91057100	ø 164 x 20	
				PRO	92106003	ø 300 x 28 x 46.5	⊖ AMG perf. pack. ⊖ sport pack.					
				PRO	92106005	ø 300 x 28 x 46.5	⊖ AMG perf. pack. ⊖ sport pack.					
				PRO	92119803	ø 330 x 28 x 46.5	⊕ AMG perf. pack. ⊕ sport pack.					
					TPM0002							
389100													
320 CDI (209.320)	01/05→05/09	165 / 224	Bre		2374502	[o] 23745 17.7	⊕ AMG sport pack. ⊕ sport pack.		Ate		2189803	[o] 21898 15.7	
			Bre	epad	2374581	[o] 23745 17.7	⊕ AMG sport pack. ⊕ sport pack.		Ate	epad	2189881	[o] 21898 15.7	
			Bre		2394501	[o] 23945 16.5	⊖ AMG sport pack. ⊖ sport pack.				98024701	L95	
					98024701	L95			Ate		82501300		
			Bre		82075200					PRO	92032703	ø 278 x 9 x 53.5	⊖ AMG sport pack. ⊖ sport pack.
			Bre		82504800		⊕ AMG sport pack. ⊕ sport pack.			PRO	92072703	ø 290 x 10 x 55.2	⊕ AMG sport pack. ⊕ sport pack.
					92151000	ø 330 x 28 x 46.5	⊖ AMG sport pack. ⊖ sport pack.			TPM0002		
				PRO	92151003	ø 330 x 28 x 46.5	⊖ AMG sport pack. ⊖ sport pack.			91057100	ø 164 x 20	
				PRO	92123703	ø 345 x 30 x 46.5	⊕ AMG sport pack. ⊕ sport pack.					
					TPM0002							
389200													
350 (209.356)	01/05→05/09	200 / 272	Luc		2314402	[o] 23144 19.8	⊕ J ⊕ AUS ⊖ sport pack. ⊖ AMG sport pack.		Ate		2189803	[o] 21898 15.7	
			Luc	epad	2314482	[o] 23144 19.8	⊕ J ⊕ AUS ⊖ sport pack. ⊖ AMG sport pack.		Ate	epad	2189881	[o] 21898 15.7	
			Bre		2374502	[o] 23745 17.7	⊕ sport pack. ⊕ AMG sport pack.				98024701	L95	
			Bre	epad	2374581	[o] 23745 17.7	⊕ sport pack. ⊕ AMG sport pack.		Ate		82501300		
			Bre		2394501	[o] 23945 16.5	⊖ J ⊖ USA ⊖ AUS ⊖ sport pack. ⊖ AMG sport pack.			PRO	92072703	ø 290 x 10 x 55.2	

I - M

CLK (C209) 06/02→05/09

350 (209.356)	01/05→05/09	389200 200 / 272			98024701	L95				TPM0002			
			Luc		82055900		⊕ J ⊕ AUS ⊖ sport pack. ⊖ AMG sport pack.			91057100	ø 164 x 20	
			Bre		82075200		⊕ sport pack. ⊕ AMG sport pack.					
			Bre		82504800							
			Luc		82063500		⊕ J ⊕ AUS ⊖ sport pack. ⊖ AMG sport pack.					
					92151000	ø 330 x 28 x 46.5	⊖ USA ⊖ J ⊖ AUS ⊖ sport pack. ⊖ AMG sport pack.					
				PRO	92106003	ø 300 x 28 x 46.5	⊖ sport pack. ⊖ AMG sport pack. ⊕ J ⊕ USA ⊕ AUS					
				PRO	92106005	ø 300 x 28 x 46.5	⊖ sport pack. ⊖ AMG sport pack. ⊕ J ⊕ USA ⊕ AUS					
				PRO	92151003	ø 330 x 28 x 46.5	⊖ USA ⊖ J ⊖ AUS ⊖ sport pack. ⊖ AMG sport pack.					
				PRO	92123703	ø 345 x 30 x 46.5	⊕ sport pack. ⊕ AMG sport pack.					
					TPM0002							
500	09/02→12/05	389300 215 / 292	Bre		2374502	[o] 23745 17.7		Ate	epad	2130581	[o] 21305 15.5	
			Bre	epad	2374581	[o] 23745 17.7				98024701	L95	
					98024701	L95			PRO	92137203	ø 300 x 22 x 53.6	
			Bre		82075200					TPM0002		
			Bre		82504800					91057100	ø 164 x 20	
					92123600	ø 345 x 30 x 46.5	⊖ AMG sport pack. ⊖ sport pack.					
				PRO	92123603	ø 345 x 30 x 46.5	⊖ AMG sport pack. ⊖ sport pack.					
				PRO	92123703	ø 345 x 30 x 46.5	⊕ AMG sport pack. ⊕ sport pack.					
					TPM0002							
500 (209.372)	06/06→05/09	389400 285 / 388	Bre		2374502	[o] 23745 17.7		Ate		2130503	[o] 21305 16	
500 (209.375)	06/02→05/09	225 / 306	Bre	epad	2374581	[o] 23745 17.7		Ate	epad	2130581	[o] 21305 15.5	
					98024701	L95				98024701	L95	
			Bre		82075200				PRO	92137203	ø 300 x 22 x 53.6	
			Bre		82504800					TPM0002		
					92123600	ø 345 x 30 x 46.5	⊖ AMG sport pack. ⊖ sport pack.			91057100	ø 164 x 20	
				PRO	92123603	ø 345 x 30 x 46.5	⊖ AMG sport pack. ⊖ sport pack.					
				PRO	92123703	ø 345 x 30 x 46.5	⊕ AMG sport pack. ⊕ sport pack.					
					TPM0002							
55 AMG	09/02→12/05	389500 260 / 354	Bre		2374502	[o] 23745 17.7	→F123374 →2004-08-01	Ate		2130503	[o] 21305 16	→F123374 →2004-08-01
			Bre	epad	2374581	[o] 23745 17.7	→F123374 →2004-08-01	Ate		2130504	[o] 21305 15.5	→F123374 →2004-08-01
			Bre		2395501	[o] 23955 17.5	F103001→ 2004-01-11→	Ate	epad	2130581	[o] 21305 15.5	→F123374 →2004-08-01
					98024701	L95	→F123374 →2004-08-01	Bre		2347802	[o] 23478 14.8	F103001→ 2004-01-11→
					98036401	L98	F103001→ 2004-01-11→			98024701	L95	right
				PRO	92123703	ø 345 x 30 x 46.5	→F123374 →2004-08-01			98036401	L98	
					TPM0002				PRO	92137203	ø 300 x 22 x 53.6	→F123374 →2004-08-01
										TPM0002		
										91057100	ø 164 x 20	
55 AMG (209.376)	09/02→05/09	389600 270 / 367	Bre		2374502	[o] 23745 17.7	→F 123374	Ate		2130503	[o] 21305 16	cal. + 2 holding pins →F 123374
			Bre	epad	2374581	[o] 23745 17.7	→F 123374	Ate	epad	2130581	[o] 21305 15.5	cal. + 2 holding pins →F 123374

		kW / hp									
CLK (C209) 06/02→05/09											
55 AMG (209.376)	09/02→05/09	389600 270 / 367	Bre	2395501	[o] 23955 17.5	F 103001→		PRO	92137203	ø 300 x 22 x 53.6	→F123374
				98036400	L98	F 088109→			TPM0002		
			Bre	82504700		→F 123374			91057100	ø 164 x 20	
			Bre	82504800		→F 123374					
				PRO 92123703	ø 345 x 30 x 46.5	→F 123374					
				TPM0002							
63 AMG (209.377)	04/06→05/09	389700 354 / 481	Bre	2395501	[o] 23955 17.5	⊖ black series			98036400	L98	F 252079→
63 AMG (209.377)	05/07→05/09	373 / 507		98036400	L98				TPM0002		
				TPM0002					91057100	ø 164 x 20	
CLK Cabriolet (A208) 03/98→03/02 → CLK Convertible (A208), Page 607											
CLK Cabriolet (A209) 02/03→03/10 → CLK Convertible (A209), Page 608											
CLK Convertible (A208) 03/98→03/02											
200 (208.435)	03/98→03/02	389800 100 / 136	Ate	2166404	[o] 21664 19.8		Ate		2191903	[–] 21919 15.7	
			Ate	epad 2166481	[o] 21664 19.8		Ate		82058800		
				98021300	L90			PRO	92032703	ø 278 x 9 x 53.5	
			Ate	82032000					TPM0001		
			Ate	82062900					91032800	ø 164 x 20	
				PRO 92105903	ø 288 x 25 x 46.5				97011600		
				TPM0001							
200 Kompressor (208.444)	06/00→03/02	389900 120 / 163	Ate	2167001	[o] 21670 20.3		Ate		2130504	[o] 21305 15.5	
200 Kompressor (208.445)	03/98→06/00	141 / 192	Ate	epad 2167081	[o] 21670 20.3		Ate	epad	2130581	[o] 21305 15.5	
230 Kompressor (208.447)	03/98→06/00	142 / 193		98021300	L90		Ate		82046000		
230 Kompressor (208.448)	06/00→03/02	145 / 197	Ate	82032000				PRO	92072703	ø 290 x 10 x 55.2	
			Ate	82062900					TPM0001		
				PRO 92106003	ø 300 x 28 x 46.5				91032800	ø 164 x 20	
				PRO 92106005	ø 300 x 28 x 46.5				97011600		
				TPM0001							
320 (208.465)	03/98→03/02	390000 160 / 218	Ate	2167001	[o] 21670 20.3		Ate		2130504	[o] 21305 15.5	→T098095
			Ate	epad 2167081	[o] 21670 20.3		Ate	epad	2130581	[o] 21305 15.5	→T098095
				98021300	L90		Ate		2189801	[o] 21898 15.7	T098096→
			Ate	82032000			Ate	epad	2189881	[o] 21898 15.7	T098096→
			Ate	82062900			Ate		82046000		
				PRO 92106003	ø 300 x 28 x 46.5			PRO	92072703	ø 290 x 10 x 55.2	
				PRO 92106005	ø 300 x 28 x 46.5				TPM0001		
				TPM0001					91032800	ø 164 x 20	
									97011600		
430 (208.470)	09/98→03/02	390100 205 / 279	Ate	2115307	[o] 21153 17.5	⊖ AUS →T028295	Ate		2130504	[o] 21305 15.5	
			Ate	2148401	[o] 21484 20.8	⊖ AUS T028296→	Ate	epad	2130581	[o] 21305 15.5	
			Ate	2167001	[o] 21670 20.3	⊕ AUS	Ate		82046000		
			Ate	epad 2167081	[o] 21670 20.3	⊕ AUS		PRO	92072703	ø 290 x 10 x 55.2	
				98021300	L90	⊕ AUS ⊖ AUS →T028295			TPM0001		

		kW / hp											
CLK Convertible (A208) 03/98→03/02													
390100				98030800	L74	⊖ AUS T028296→			91032800	ø 164 x 20	
430 (208.470)	09/98→03/02	205 / 279	Ate	82500500		⊖ AUS →T028295			97011600		
			Ate	82032000		⊖ AUS					
			Ate	82059200		⊖ AUS T028296→					
			Ate	82062900							
				92073100	ø 316 x 28 x 46.5	⊖ AUS →T028295					
				92106003	ø 300 x 28 x 46.5	⊕ AUS					
				92106005	ø 300 x 28 x 46.5	⊕ AUS					
				92181903	ø 330 x 32 x 47	⊖ AUS T028296→					
				TPM0001							
390200			Ate	2148401	[o] 21484 20.8		Ate		2130503	[o] 21305 16	
55 AMG (208.474)	01/00→03/02	255 / 347		98030800	L74		Ate		2130581	[o] 21305 15.5	
			Ate	82059200			Ate		82046000		
			Ate	82062900					92137203	ø 300 x 22 x 53.6	⊖ AUS
				TPM0001					TPM0001		
									91032800	ø 164 x 20	
									97011600		
CLK Convertible (A209) 02/03→03/10													
390300			Luc	2314402	[o] 23144 19.8	⊖ sport pack. ⊖ AMG sport pack.	Ate		2189803	[o] 21898 15.7	
CLK 200 CGI (209.443)	07/03→03/10	125 / 170	Luc	2314482	[o] 23144 19.8	⊖ sport pack. ⊖ AMG sport pack.	Ate		2189881	[o] 21898 15.7	
			Bre	2394501	[o] 23945 16.5	⊕ sport pack. ⊕ AMG sport pack.			98024701	L95	
				98024701	L95		Ate		82500000		⊖ sport pack. ⊖ AMG sport pack.
			Luc	82055900		⊖ sport pack. ⊖ AMG sport pack.	Ate		82501300		⊕ sport pack. ⊕ AMG sport pack.
			Bre	82504800		⊕ AMG sport pack. ⊕ sport pack.			92032703	ø 278 x 9 x 53.5	⊖ sport pack. ⊖ AMG sport pack.
			Luc	82063500		⊖ sport pack. ⊖ AMG sport pack.			92072703	ø 290 x 10 x 55.2	⊕ sport pack. ⊕ AMG sport pack.
				92105903	ø 288 x 25 x 46.5	⊖ sport pack. ⊖ AMG sport pack.			TPM0002		
				92119803	ø 330 x 28 x 46.5	⊕ sport pack. ⊕ AMG sport pack.			91057100	ø 164 x 20	
				TPM0002							
390400			Luc	2314402	[o] 23144 19.8	⊖ AMG sport pack. ⊖ sport pack.	Ate		2189803	[o] 21898 15.7	
CLK 200 Kompressor (209.441)	10/06→03/10	135 / 184	Luc	2314482	[o] 23144 19.8	⊖ AMG sport pack. ⊖ sport pack.	Ate		2189881	[o] 21898 15.7	
			Bre	2394501	[o] 23945 16.5	⊕ sport pack. ⊕ AMG sport pack.			98024701	L95	
				98024701	L95		Ate		82501300		
			Luc	82055900		⊖ AMG sport pack. ⊖ sport pack.			92072703	ø 290 x 10 x 55.2	
			Bre	82504800		⊕ AMG sport pack. ⊕ sport pack.			TPM0002		
			Luc	82063500		⊖ AMG sport pack. ⊖ sport pack.			91057100	ø 164 x 20	
				92106003	ø 300 x 28 x 46.5	⊖ AMG sport pack. ⊖ sport pack.					
				92106005	ø 300 x 28 x 46.5	⊖ AMG sport pack. ⊖ sport pack.					
				92119803	ø 330 x 28 x 46.5	⊕ AMG sport pack. ⊕ sport pack.					
				TPM0002							
390500			Luc	2314402	[o] 23144 19.8	⊖ AMG sport pack. ⊖ sport pack.	Ate		2189803	[o] 21898 15.7	
CLK 200 Kompressor (209.442)	02/03→03/10	120 / 163									
CLK 280 (209.454)	01/05→03/10	170 / 231									

		kW / hp											
CLK Convertible (A209) 02/03→03/10													
		390500	Luc		2314482	[o] 23144 19.8	⊖ AMG sport pack. ⊖ sport pack.	Ate		2189881	[o] 21898 15.7	
CLK 200 Kompressor (209.442)	02/03→03/10	120 / 163										
CLK 280 (209.454)	01/05→03/10	170 / 231	Bre		2394501	[o] 23945 16.5	⊕ AMG sport pack. ⊕ sport pack.			98024701	L95	
					98024701	L95		Ate		82501300		
			Luc		82055900		⊖ AMG sport pack. ⊖ sport pack.		PRO	92072703	ø 290 x 10 x 55.2	
			Bre		82504800		⊕ AMG sport pack. ⊕ sport pack.			TPM0002		
			Luc		82063500		⊖ AMG sport pack. ⊖ sport pack.			91057100	ø 164 x 20	
				PRO	92106003	ø 300 x 28 x 46.5	⊖ AMG sport pack. ⊖ sport pack.					
				PRO	92106005	ø 300 x 28 x 46.5	⊖ AMG sport pack. ⊖ sport pack.					
				PRO	92119803	ø 330 x 28 x 46.5	⊕ AMG sport pack. ⊕ sport pack.					
					TPM0002							
		390600	Luc		2314402	[o] 23144 19.8		Ate		2189803	[o] 21898 15.7	
CLK 240 (209.461)	02/03→03/10	125 / 170										
CLK 320 (209.465)	02/03→03/10	160 / 218	Luc		2314482	[o] 23144 19.8		Ate		2189881	[o] 21898 15.7	
					98024701	L95				98024701	L95	
			Luc		82055900			Ate		82501300		
			Luc		82063500				PRO	92072703	ø 290 x 10 x 55.2	
				PRO	92106003	ø 300 x 28 x 46.5				TPM0002		
				PRO	92106005	ø 300 x 28 x 46.5				91057100	ø 164 x 20	
					TPM0002							
		390700	Bre		2374502	[o] 23745 17.7	⊕ sport pack. ⊕ AMG sport pack.	Ate		2189803	[o] 21898 15.7	
CLK 320 CDI (209.420)	03/05→03/10	165 / 224	Bre		2374581	[o] 23745 17.7	⊕ sport pack. ⊕ AMG sport pack.	Ate		2189881	[o] 21898 15.7	
			Bre		2394501	[o] 23945 16.5	⊖ sport pack. ⊖ AMG sport pack.			98024701	L95	
					98024701	L95		Ate		82501300		
			Bre		82075200		⊕ sport pack. ⊕ AMG sport pack.		PRO	92072703	ø 290 x 10 x 55.2	
			Bre		82504800		⊖ sport pack. ⊖ AMG sport pack.			TPM0002		
					92151000	ø 330 x 28 x 46.5	⊖ sport pack. ⊖ AMG sport pack.			91057100	ø 164 x 20	
				PRO	92151003	ø 330 x 28 x 46.5	⊖ sport pack. ⊖ AMG sport pack.					
				PRO	92123703	ø 345 x 30 x 46.5	⊕ sport pack. ⊕ AMG sport pack.					
					TPM0002							
		390800	Luc		2314402	[o] 23144 19.8	⊕ J ⊕ AUS ⊖ sport pack. ⊖ AMG sport pack.	Ate		2189803	[o] 21898 15.7	
CLK 350 (209.456)	01/05→03/10	200 / 272	Luc		2314482	[o] 23144 19.8	⊕ J ⊕ AUS ⊖ sport pack. ⊖ AMG sport pack.	Ate		2189881	[o] 21898 15.7	
			Bre		2374502	[o] 23745 17.7	⊕ sport pack. ⊕ AMG sport pack.			98024701	L95	
			Bre		2374581	[o] 23745 17.7	⊕ sport pack. ⊕ AMG sport pack.	Ate		82501300		
			Bre		2394501	[o] 23945 16.5	⊖ J ⊖ USA ⊖ AUS ⊖ sport pack. ⊖ AMG sport pack.		PRO	92072703	ø 290 x 10 x 55.2	
					98024701	L95				TPM0002		
			Luc		82055900		⊕ J ⊕ AUS ⊖ sport pack. ⊖ AMG sport pack.			91057100	ø 164 x 20	
			Bre		82075200		⊕ sport pack. ⊕ AMG sport pack.					
			Bre		82504800							
			Luc		82063500		⊕ J ⊕ AUS ⊖ sport pack. ⊖ AMG sport pack.					
					92151000	ø 330 x 28 x 46.5	⊖ USA ⊖ J ⊖ AUS ⊖ sport pack. ⊖ AMG sport pack.					
				PRO	92106003	ø 300 x 28 x 46.5	⊖ sport pack. ⊖ AMG sport pack. ⊕ J ⊕ USA ⊕ AUS					

I - M

		kW / hp												
CLK Convertible (A209) 02/03→03/10														
		390800		PRO	92106005	ø 300 x 28 x 46.5	⊖ sport pack. ⊖ AMG sport pack. ⊕ J ⊕ USA ⊕ AUS						
CLK 350 (209.456)	01/05→03/10	200 / 272		PRO	92151003	ø 330 x 28 x 46.5	⊖ USA ⊖ J ⊖ AUS ⊖ sport pack. ⊖ AMG sport pack.						
				PRO	92123703	ø 345 x 30 x 46.5	⊕ sport pack. ⊕ AMG sport pack.						
					TPM0002								
		390900	Bre		2374502	[o] 23745 17.7		Ate		2130581	[o] 21305 15.5	
CLK 500	09/03→12/05	215 / 292	Bre	epad	2374581	[o] 23745 17.7				98024701	L95	
					98024701	L95			PRO	92137203	ø 300 x 22 x 53.6	
			Bre		82075200					TPM0002		
					92123600	ø 345 x 30 x 46.5	⊖ AMG sport pack. ⊖ sport pack.			91057100	ø 164 x 20	
				PRO	92123603	ø 345 x 30 x 46.5	⊖ AMG sport pack. ⊖ sport pack.					
				PRO	92123703	ø 345 x 30 x 46.5	⊕ sport pack. ⊕ AMG sport pack. ⊕ USA					
					TPM0002							
		391000	Bre		2374502	[o] 23745 17.7		Ate		2130503	[o] 21305 16	
CLK 500 (209.472)	06/06→03/10	285 / 388										
CLK 500 (209.475)	02/03→03/10	225 / 306	Bre	epad	2374581	[o] 23745 17.7		Ate	epad	2130581	[o] 21305 15.5	
					98024701	L95				98024701	L95	
			Bre		82075200				PRO	92137203	ø 300 x 22 x 53.6	
					92123600	ø 345 x 30 x 46.5	⊖ AMG sport pack. ⊖ sport pack.			TPM0002		
				PRO	92123603	ø 345 x 30 x 46.5	⊖ AMG sport pack. ⊖ sport pack.			91057100	ø 164 x 20	
				PRO	92123703	ø 345 x 30 x 46.5	⊕ AMG sport pack. ⊕ sport pack.					
					TPM0002							
		391100	Bre		2374502	[o] 23745 17.7	→F123374 →2004-08-01	Ate		2130503	[o] 21305 16	→F123374 →2004-08-01
CLK 55 AMG	09/03→12/05	260 / 354	Bre	epad	2374581	[o] 23745 17.7	→F123374 →2004-08-01	Ate		2130504	[o] 21305 15.5	→F123374 →2004-08-01
			Bre		2395501	[o] 23955 17.5	F103001→ 2004-01-11→	Ate	epad	2130581	[o] 21305 15.5	→F123374 →2004-08-01
					98024701	L95	→F123374 →2004-08-01	Bre		2347802	[o] 23478 14.8	F103001→ 2004-01-11→
					98036401	L98	F103001→ 2004-01-11→			98024701	L95	right
				PRO	92123703	ø 345 x 30 x 46.5	→F123374 →2004-08-01			98036401	L98	
					TPM0002				PRO	92137203	ø 300 x 22 x 53.6	→F123374 →2004-08-01
										TPM0002		
										91057100	ø 164 x 20	
		391200	Bre		2374502	[o] 23745 17.7	→F 123374	Ate		2130503	[o] 21305 16	cal. + 2 holding pins →F 123374
CLK 55 AMG (209.476)	02/03→03/10	270 / 367	Bre	epad	2374581	[o] 23745 17.7	→F 123374	Ate	epad	2130581	[o] 21305 15.5	cal. + 2 holding pins →F 123374
			Bre		2395501	[o] 23955 17.5	F 103001→		PRO	92137203	ø 300 x 22 x 53.6	→F123374
					98036400	L98	F 088109→			TPM0002		
			Bre		82504700		→F 123374			91057100	ø 164 x 20	
				PRO	92123703	ø 345 x 30 x 46.5	→F 123374					
					TPM0002							
		391300	Bre		2395501	[o] 23955 17.5	⊖ black series			98036400	L98	F 252079→
CLK 63 AMG (209.477)	04/06→03/10	354 / 481			98036400	L98				TPM0002		
					TPM0002					91057100	ø 164 x 20	

kW / hp

CLS (C218) 01/11→

391400															
CLS 220 BlueTEC (218.301) 05/14→ 120 / 163	Luc		2431001	[o]	24310	19.4		Ate		2333403	[o]	23334	16.8		
CLS 220 BlueTEC (218.301) 05/14→ 125 / 170	Luc	epad	2431081	[o]	24310	19.4		Ate	epad	2333481	[o]	23334	16.8		
CLS 220 BlueTEC (218.301) 05/14→ 130 / 177			98024701	L95						98024701	L95				
CLS 250 BlueTEC 4-matic 05/14→ 150 / 204 (218.397)	Luc		82518300					Ate		82062900					
			TPM0002					Ate		82518400					
										91069100	ø 180 x 25				
391500															
CLS 250 CDI / BlueTEC 04/11→ 150 / 204 (218.303, 218.304)	Luc		2431001	[o]	24310	19.4		Ate		2333403	[o]	23334	16.8		
	Luc	epad	2431081	[o]	24310	19.4		Ate	epad	2333481	[o]	23334	16.8		
			98024701	L95						98024701	L95				
	Luc		82518300					Ate		82062900					
			TPM0002					Ate		82518400					
									PRO	92115403	ø 300 x 10 x 68.5				
									PRO	92115405	ø 300 x 10 x 68.5				
										TPM0002					
										91069100	ø 180 x 25				
391600															
CLS 350 (218.359) 01/11→ 225 / 306	Luc		2431001	[o]	24310	19.4		Ate		2333403	[o]	23334	16.8		
CLS 350 CDI (218.323) 01/11→ 195 / 265	Luc	epad	2431081	[o]	24310	19.4		Ate	epad	2333481	[o]	23334	16.8		
CLS 350 CDI 4-matic 09/11→ 195 / 265 (218.393)			98024701	L95						98024701	L95				
	Luc		82518300					Ate		82062900					
			TPM0002					Ate		82518400					
									PRO	92115503	ø 300 x 22 x 68				
									PRO	92115505	ø 300 x 22 x 68				
										TPM0002					
										91069100	ø 180 x 25				
391700															
CLS 350 BlueTEC (218.326) 11/12→ 185 / 252	Luc		2431001	[o]	24310	19.4	⊖ AMG sport pack. ⊖ sport pack.	Ate		2333403	[o]	23334	16.8		
CLS 350 BlueTEC 4-matic 11/12→ 185 / 252 (218.394)	Luc	epad	2431081	[o]	24310	19.4	⊖ AMG sport pack. ⊖ sport pack.	Ate	epad	2333481	[o]	23334	16.8		
	Bre		2497601	[o]	24976	17.5	⊕ AMG sport pack. ⊕ sport pack.			98024701	L95				
			98024701	L95				Ate		82518400					
	Bre		82504000				⊕ AMG sport pack. ⊕ sport pack.		PRO	92115503	ø 300 x 22 x 68				
	Luc		82518300				⊖ AMG sport pack. ⊖ sport pack.		PRO	92115505	ø 300 x 22 x 68				
			TPM0002							91069100	ø 180 x 25				
391800															
CLS 350 BlueTEC (218.326) 06/14→ 190 / 258	Luc		2431001	[o]	24310	19.4	⊖ AMG sport pack. ⊖ sport pack.	Ate		2333403	[o]	23334	16.8		
	Luc	epad	2431081	[o]	24310	19.4	⊖ AMG sport pack. ⊖ sport pack.	Ate	epad	2333481	[o]	23334	16.8		
	Bre		2497601	[o]	24976	17.5	⊕ AMG sport pack. ⊕ sport pack.			98024701	L95				
	Bre		82504000				⊕ AMG sport pack. ⊕ sport pack.	Ate		82518400					
	Luc		82518300				⊖ AMG sport pack. ⊖ sport pack.		PRO	92115503	ø 300 x 22 x 68				
			TPM0002						PRO	92115505	ø 300 x 22 x 68				
										91069100	ø 180 x 25				
391900															
CLS 400 (218.361) 07/14→ 245 / 333	Bre		2497601	[o]	24976	17.5	⊕ AMG sport pack. ⊕ sport pack.	Ate		2333403	[o]	23334	16.8		
CLS 400 (218.365) 05/14→ 245 / 333			98024701	L95				Ate	epad	2333481	[o]	23334	16.8		
CLS 400 4-matic (218.368) 07/14→ 245 / 333															

I - M

		kW / hp												
CLS (C218) 01/11→														
		391900	Bre		82504000					98024701	L95	
CLS 400 (218.361)	07/14→	245 / 333										
CLS 400 (218.365)	05/14→	245 / 333	Luc		82518300			Ate		82518400		
CLS 400 4-matic (218.368)	07/14→	245 / 333			TPM0002				PRO	92115503	ø 300 x 22 x 68	
									PRO	92115505	ø 300 x 22 x 68	
										TPM0002		
										91069100	ø 180 x 25	
		392000			98024701	L95		Ate		2333403	[o] 23334 16.8	
CLS 400 4-matic (218.367)	05/14→	245 / 333	Bre		82504000			Ate	epad	2333481	[o] 23334 16.8	
			Luc		82518300					98024701	L95	
					TPM0002			Ate		82518400		
									PRO	92115503	ø 300 x 22 x 68	
									PRO	92115505	ø 300 x 22 x 68	
										91069100	ø 180 x 25	
		392100	Bre		2521901	[o] 25219 17.8	⊖ USA	Ate		2333403	[o] 23334 16.8	
CLS 500 (218.373)	02/11→	300 / 408										
CLS 500 4-matic (218.391)	09/11→	300 / 408	Bre		2521902	[o] 25219 17.8	⊕ USA	Ate	epad	2333481	[o] 23334 16.8	
					98024701	L95				98024701	L95	
					TPM0002			Ate		82062900		
								Ate		82518400		
										TPM0002		
										91069100	ø 180 x 25	
		392200	Bre		2521901	[o] 25219 17.8		Ate		2333403	[o] 23334 16.8	
CLS 550	09/11→	320 / 435										
CLS 550 4-matic	09/11→	320 / 435			98024701	L95		Ate	epad	2333481	[o] 23334 16.8	
					TPM0002					98024701	L95	
								Ate		82518400		
										TPM0002		
										91069100	ø 180 x 25	
		392300			98036401	L98		Bre		2473301	[o] 24733 15.3	→A080452 →2012-11-21
CLS 63 AMG	09/11→	399 / 543			TPM0002					98036401	L98	
										91069100	ø 180 x 25	
		392400			98036401	L98		Bre		2473301	[o] 24733 15.3	⊖ ceramic brake
CLS 63 AMG (218.374)	01/11→	410 / 558			TPM0002					98036401	L98	
CLS 63 AMG (218.374)	02/11→	386 / 525								TPM0002		
										91069100	ø 180 x 25	
		392500			98036401	L98	⊖ ceramic brake	Bre		2473301	[o] 24733 15.3	⊕ red cal.
CLS 63 AMG (218.375)	02/13→	430 / 585			TPM0002					98036401	L98	
										91069100	ø 180 x 25	
		392600			98036401	L98	⊖ ceramic brake			98036401	L98	
CLS 63 AMG 4-matic (218.376)	02/13→	430 / 585										
CLS 63 AMG 4-matic (218.392)	05/13→	410 / 558			TPM0002					91069100	ø 180 x 25	
CLS (C219) 10/04→12/10												
		392700	Bre		2374502	[o] 23745 17.7		Ate		2333403	[o] 23334 16.8	
CLS 280 (219.354)	07/08→12/10	170 / 231										
CLS 300 (219.354)	04/09→12/10	170 / 231										

		kW / hp												
CLS (C219) 10/04→12/10														
		392700	Bre		2374581	[o] 23745 17.7		Ate		2333481	[o] 23334 16.8	
CLS 280 (219.354)	07/08→12/10	170 / 231			98024701	L95				98024701	L95	
CLS 300 (219.354)	04/09→12/10	170 / 231	Bre		82504800			Ate		82062900		
				PRO	92119903	ø 330 x 32 x 64.5		Ate		82076400		
				PRO	92119905	ø 330 x 32 x 64.5			PRO	92115503	ø 300 x 22 x 68	
					TPM0002				PRO	92115505	ø 300 x 22 x 68	
										TPM0002		
										91058800	ø 180 x 25	
										97035400		
		392800	Bre		2374502	[o] 23745 17.7		Ate		2333403	[o] 23334 16.8	
CLS 320 CDI	01/05→12/10	155 / 211	Bre		2374581	[o] 23745 17.7		Ate		2333481	[o] 23334 16.8	
					98029400					98024701	L95	
			Bre		82504800			Ate		82062900		
			Luc		82518300			Ate		82076400		
				PRO	92115303	ø 312 x 28 x 64.5			PRO	92115503	ø 300 x 22 x 68	
					TPM0002				PRO	92115505	ø 300 x 22 x 68	
										TPM0002		
										91058800	ø 180 x 25	
										97035400		
		392900	Bre		2374502	[o] 23745 17.7		Ate		2333403	[o] 23334 16.8	
CLS 320 CDI (219.322)	01/05→12/10	165 / 224	Bre		2374581	[o] 23745 17.7		Ate		2333481	[o] 23334 16.8	
CLS 350 CDI (219.322)	04/09→12/10	165 / 224			98024701	L95	right			98024701	L95	right
					98029400		left	Ate		82062900		
			Bre		82504800			Ate		82076400		
			Bre		82518800				PRO	92115503	ø 300 x 22 x 68	
				PRO	92115303	ø 312 x 28 x 64.5			PRO	92115505	ø 300 x 22 x 68	
					TPM0002					TPM0002		
										91058800	ø 180 x 25	
										97035400		
		393000	Bre		2374502	[o] 23745 17.7		Ate		2333403	[o] 23334 16.8	
CLS 350	09/09→	228 / 310	Bre		2374581	[o] 23745 17.7		Ate		2333481	[o] 23334 16.8	
CLS 350 (219.356)	10/04→12/10	200 / 272			98024701	L95	right			98024701	L95	right
CLS 350 (219.357)	04/06→12/10	215 / 292			98029400		left	Ate		82062900		
CLS 350 CGI (219.357)	04/09→12/10	215 / 292	Bre		82504800			Ate		82076400		
CLS 500	09/05→12/06	218 / 296		PRO	92119903	ø 330 x 32 x 64.5			PRO	92115503	ø 300 x 22 x 68	
CLS 500 (219.375)	10/04→12/10	225 / 306		PRO	92119905	ø 330 x 32 x 64.5			PRO	92115505	ø 300 x 22 x 68	
					TPM0002					TPM0002		
										91058800	ø 180 x 25	
										97035400		
		393100	Bre		2374502	[o] 23745 17.7		Ate		2333403	[o] 23334 16.8	
CLS 350 CDI	04/09→12/10	200 / 272										

		kW / hp												
CLS (C219) 10/04→12/10														
CLS 350 CDI	04/09→12/10	393100 200 / 272	Bre	epad	2374581	[o] 23745 17.7		Ate	epad	2333481	[o] 23334 16.8	
					98024701	L95	right			98024701	L95	right
					98029400		left	Ate		82062900		
			Bre		82504800			Ate		82076400		
				PRO	92115303	ø 312 x 28 x 64.5			PRO	92115503	ø 300 x 22 x 68	
					TPM0002				PRO	92115505	ø 300 x 22 x 68	
										TPM0002		
										91058800	ø 180 x 25	
										97035400		
CLS 500 (219.372)	04/06→12/10	393200 285 / 388	Bre		2374502	[o] 23745 17.7	⊕ J ⊕ USA ⊕ AUS	Ate		2333403	[o] 23334 16.8	
			Bre	epad	2374581	[o] 23745 17.7	⊕ J ⊕ USA ⊕ AUS	Ate	epad	2333481	[o] 23334 16.8	
			Bre		2396001	[o] 23960 17.8	⊖ J ⊖ USA ⊖ AUS			98024701	L95	
			Bre	epad	2396081	[o] 23960 17.8	⊖ J ⊖ USA ⊖ AUS	Ate		82062900		
					98029400		⊖ USA ⊖ J ⊖ AUS	Ate		82076400		
					98036400	L98	⊕ USA ⊕ J ⊕ AUS		PRO	92115503	ø 300 x 22 x 68	
			Bre		82504000		⊖ J ⊖ USA ⊖ AUS		PRO	92115505	ø 300 x 22 x 68	
			Bre		82504800		⊕ J ⊕ USA ⊕ AUS			TPM0002		
				PRO	92119903	ø 330 x 32 x 64.5				91058800	ø 180 x 25	
				PRO	92119905	ø 330 x 32 x 64.5				97035400		
					TPM0002							
CLS 550	04/06→	393300 285 / 388	Bre		2396001	[o] 23960 17.8		Ate		2333403	[o] 23334 16.8	
			Bre	epad	2396081	[o] 23960 17.8		Ate	epad	2333481	[o] 23334 16.8	
					98036400	L98		Ate		82062900		
			Bre		82504000			Ate		82076400		
				PRO	92240103	ø 350 x 32 x 64.5				TPM0002		
					TPM0002					91058800	ø 180 x 25	
CLS 55 AMG (219.376)	01/05→12/10	393400 350 / 476	Bre		2394301	[o] 23943 17.5		Bre		2347801	[o] 23478 16.5	
					98024701	L95				98024701	L95	
			Bre		82075200					92120000	ø 330 x 26 x 68.3	
				PRO	92120303	ø 360 x 36 x 64.5	⊖ AMG perf. pack.			TPM0002		
				PRO	92120305	ø 360 x 36 x 64.5	⊖ AMG perf. pack.			91058800	ø 180 x 25	
					TPM0002					97035400		
CLS 63 AMG (219.377)	04/06→12/10	393500 378 / 514			98036400	L98	right	Bre		2447301	[–] 24473 14.8	
					TPM0002					98036400	L98	right
										92120000	ø 330 x 26 x 68.3	
										TPM0002		
										91058800	ø 180 x 25	
										97035400		
CLS Shooting Brake (X218) 10/12→												
CLS 220 BlueTEC (218.901)	05/14→	393600 120 / 163	Luc		2431001	[o] 24310 19.4		Ate		2333403	[o] 23334 16.8	
CLS 220 BlueTEC (218.901)	05/14→	125 / 170										
CLS 220 BlueTEC (218.901)	05/14→	130 / 177										

CLS Shooting Brake (X218) 10/12→

		kW / hp												
CLS 250 CDI / BlueTEC (218.903, 218.904)	10/12→	150 / 204	Luc	epad	2431081	[o]	24310	19.4		Ate	epad	2333481	[o]	23334	16.8	
					98024701	L95						98024701	L95			
			Luc		82518300					Ate		82062900				
					TPM0002					Ate		82518400				
												TPM0002				
												91069100	ø 180 x 25			
CLS 250 BlueTEC 4-matic (218.997)	05/14→	393700 150 / 204	Luc		2431001	[o]	24310	19.4		Ate		2333403	[o]	23334	16.8	
			Luc	epad	2431081	[o]	24310	19.4		Ate	epad	2333481	[o]	23334	16.8	
					98024701	L95						98024701	L95			
			Luc		82518300					Ate		82518400				
					TPM0002							91069100	ø 180 x 25			
CLS 350 (218.959)	10/12→	393800 225 / 306	Luc		2431001	[o]	24310	19.4	⊖ AMG sport pack. ⊖ sport pack.	Ate		2333403	[o]	23334	16.8	
CLS 350 BlueTEC (218.926)	05/14→	190 / 258														
CLS 350 BlueTEC 4-matic (218.994)	05/14→	185 / 252	Luc	epad	2431081	[o]	24310	19.4	⊖ AMG sport pack. ⊖ sport pack.	Ate	epad	2333481	[o]	23334	16.8	
CLS 350 CDI (218.923)	10/12→	195 / 265	Bre		2497601	[o]	24976	17.5	⊕ AMG sport pack. ⊕ sport pack.			98024701	L95			
					98024701	L95				Ate		82062900				
			Bre		82504000				⊕ AMG sport pack. ⊕ sport pack.	Ate		82518400				
			Luc		82518300				⊖ AMG sport pack. ⊖ sport pack.		PRO	92115503	ø 300 x 22 x 68			
					TPM0002						PRO	92115505	ø 300 x 22 x 68			
												TPM0002				
												91069100	ø 180 x 25			
CLS 350 CDI 4-matic (218.993)	10/12→	393900 195 / 265	Luc		2431001	[o]	24310	19.4	⊖ sport pack. ⊖ AMG sport pack.	Ate		2333403	[o]	23334	16.8	
			Luc	epad	2431081	[o]	24310	19.4	⊖ sport pack. ⊖ AMG sport pack.	Ate	epad	2333481	[o]	23334	16.8	
			Bre		2497601	[o]	24976	17.5	⊕ sport pack. ⊕ AMG sport pack.			98024701	L95			
					98024701	L95				Ate		82062900				
			Bre		82504000				⊕ AMG sport pack. ⊕ sport pack.	Ate		82518400				
			Luc		82518300				⊖ AMG sport pack. ⊖ sport pack.		PRO	92115503	ø 300 x 22 x 68			
					TPM0002						PRO	92115505	ø 300 x 22 x 68			
												TPM0002				
												91069100	ø 180 x 25			
CLS 400 (218.961)	07/14→	394000 245 / 333	Bre		2497601	[o]	24976	17.5	⊕ AMG sport pack. ⊕ sport pack.	Ate		2333403	[o]	23334	16.8	
					98024701	L95				Ate	epad	2333481	[o]	23334	16.8	
			Bre		82504000				⊕ AMG sport pack. ⊕ sport pack.			98024701	L95			
					TPM0002					Ate		82518400				
											PRO	92115503	ø 300 x 22 x 68			
											PRO	92115505	ø 300 x 22 x 68			
												TPM0002				
												91069100	ø 180 x 25			
CLS 400 (218.965)	05/14→	394100 245 / 333	Bre		2497601	[o]	24976	17.5		Ate		2333403	[o]	23334	16.8	
					98024701	L95				Ate	epad	2333481	[o]	23334	16.8	
			Bre		82504000							98024701	L95			

		kW / hp										
CLS Shooting Brake (X218)		10/12→										
394100				TPM0002			Ate		82518400		
CLS 400 (218.965)	05/14→	245 / 333						PRO	92115503	ø 300 x 22 x 68	
								PRO	92115505	ø 300 x 22 x 68	
									TPM0002		
									91069100	ø 180 x 25	
394200				98024701	L95		Ate		2333403	[o] 23334 16.8	
CLS 400 4-matic (218.967)	05/14→	245 / 333	Bre	82504000			Ate	epad	2333481	[o] 23334 16.8	
				TPM0002					98024701	L95	
							Ate		82518400		
								PRO	92115503	ø 300 x 22 x 68	
								PRO	92115505	ø 300 x 22 x 68	
									TPM0002		
									91069100	ø 180 x 25	
394300			Bre	2497601	[o] 24976 17.5	⊕ AMG sport pack. ⊕ sport pack.	Ate		2333403	[o] 23334 16.8	
CLS 400 4-matic (218.968)	07/14→	245 / 333		98024701	L95		Ate	epad	2333481	[o] 23334 16.8	
			Bre	82504000					98024701	L95	
							Ate		82518400		
								PRO	92115503	ø 300 x 22 x 68	
								PRO	92115505	ø 300 x 22 x 68	
									TPM0002		
									91069100	ø 180 x 25	
394400			Bre	2521901	[o] 25219 17.8		Ate		2333403	[o] 23334 16.8	
CLS 500 (218.973)	10/12→	300 / 408		98024701	L95		Ate	epad	2333481	[o] 23334 16.8	
CLS 500 4-matic (218.991)	10/12→	300 / 408		TPM0002					98024701	L95	
							Ate		82062900		
							Ate		82518400		
									TPM0002		
									91069100	ø 180 x 25	
394500				98036401	L98	⊖ ceramic brake	Bre		2473301	[o] 24733 15.3	
CLS 63 AMG (218.974)	10/12→	386 / 525							98036401	L98	
							Luc		82518900		2007-10-31→ ⊕ ceramic brake
									TPM0002		
									91069100	ø 180 x 25	
394600				98036401	L98	⊖ ceramic brake	Bre		2473301	[o] 24733 15.3	⊕ red cal.
CLS 63 AMG (218.974)	05/13→	410 / 558		TPM0002					98036401	L98	
CLS 63 AMG (218.975)	02/13→	430 / 585					Luc		82518900		⊕ ceramic brake
									TPM0002		
									91069100	ø 180 x 25	
394700				98036401	L98	⊖ ceramic brake			98036401	L98	
CLS 63 AMG 4-matic (218.976)	02/13→	430 / 585									
CLS 63 AMG 4-matic (218.992)	05/13→	410 / 558		TPM0002			Luc		82518900		⊕ ceramic brake

		kW / hp											
CLS Shooting Brake (X218) 10/12→													
		394700											
CLS 63 AMG 4-matic (218.976)	02/13→	430 / 585								91069100	ø 180 x 25		
CLS 63 AMG 4-matic (218.992)	05/13→	410 / 558											
E-CLASS (W210) 06/95→03/02													
		394800	Ate		2166404	[o] 21664 19.8		Ate		2191903	[–] 21919 15.7	cal. + 1 holding pin A379347→	
E 200 (210.035)	06/95→08/00	100 / 136											
E 200 CDI (210.007)	06/98→03/02	75 / 102	Ate	epad	2166481	[o] 21664 19.8		Ate	epad	2119701	[o] 21197 15	cal. + 2 holding pins →A379346	
E 200 CDI (210.007)	07/99→03/02	85 / 116											
E 200 D (210.003)	01/96→03/02	65 / 88			98021300	L90		Ate		82046000		cal. + 2 holding pins →A379346	
E 200 Kompressor (210.048)	08/00→03/02	120 / 163											
E 220 CDI	07/99→03/02	100 / 136	Ate		82032000			Ate		82058800		cal. + 1 holding pin A379347→	
E 220 CDI (210.006)	06/98→07/99	92 / 125											
E 220 CDI (210.006)	07/99→03/02	105 / 143	Ate		82062900				PRO	92032703	ø 278 x 9 x 53.5		
E 220 D (210.004)	06/95→07/99	70 / 95											
E 250 D (210.010)	06/95→07/99	83 / 113		PRO	92105903	ø 288 x 25 x 46.5				TPM0001			
E 250 Turbo-D (210.015)	06/97→07/99	110 / 150											
E 290 Turbo-D (210.017)	03/96→07/99	95 / 129			TPM0001					91032800	ø 164 x 20		
										97011600			
		394900	Ate		2167001	[o] 21670 20.3		Ate		2130504	[o] 21305 15.5	cal. + 2 holding pins →A379346	
E 200 Kompressor (210.045)	06/97→03/02	137 / 186											
E 280 (210.063)	12/96→03/02	150 / 204	Ate	epad	2167081	[o] 21670 20.3		Ate	epad	2130581	[o] 21305 15.5	cal. + 2 holding pins →A379346	
E 280 4-matic (210.081)	12/96→03/02	150 / 204											
E 300 Turbo-D (210.025)	12/96→07/99	130 / 177			98021300	L90		Ate		2189801	[o] 21898 15.7	cal. + 1 holding pin A379347→	
E 320 4-matic (210.082)	06/97→03/02	165 / 224											
E 320 CDI (210.026)	07/99→03/02	145 / 197	Ate		82032000			Ate	epad	2189881	[o] 21898 15.7	cal. + 1 holding pin A379347→	
			Ate		82062900					98021301	L90		
				PRO	92106003	ø 300 x 28 x 46.5		Ate		82046000		cal. + 2 holding pins →A379346	
				PRO	92106005	ø 300 x 28 x 46.5		Ate		82058800		cal. + 1 holding pin A379347→	
					TPM0001				PRO	92072703	ø 290 x 10 x 55.2		
										TPM0001			
										91032800	ø 164 x 20		
										97011600			
		395000	Ate		2166404	[o] 21664 19.8		Ate		2191903	[–] 21919 15.7	cal. + 1 holding pin A379347→	
E 220 D	05/96→03/02	55 / 75											
			Ate	epad	2166481	[o] 21664 19.8		Ate	epad	2119701	[o] 21197 15	cal. + 2 holding pins →A379346	
					98021300	L90		Ate		82046000		cal. + 2 holding pins →A379346	
			Ate		82032000			Ate		82058800		cal. + 1 holding pin A379347→	
				PRO	92105903	ø 288 x 25 x 46.5			PRO	92032703	ø 278 x 9 x 53.5		
					TPM0001					TPM0001			
										91032800	ø 164 x 20		
										97011600			
		395100	Ate		2166404	[o] 21664 19.8		Ate		2191903	[–] 21919 15.7		
E 240 (210.061)	06/97→08/00	125 / 170											
			Ate	epad	2166481	[o] 21664 19.8		Ate	epad	2189801	[o] 21898 15.7	⊕ ESP →07/97	
			Ate		2167001	[o] 21670 20.3	⊕ ESP →07/99	Ate	epad	2189881	[o] 21898 15.7	⊕ ESP →07/97	
			Ate	epad	2167081	[o] 21670 20.3	⊕ ESP →07/99			98021301	L90		
					98021300	L90		Ate		82058800			
			Ate		82032000				PRO	92032703	ø 278 x 9 x 53.5		
			Ate		82062900				PRO	92072703	ø 290 x 10 x 55.2	⊕ ESP →07/99	
				PRO	92105903	ø 288 x 25 x 46.5				TPM0001			
				PRO	92106003	ø 300 x 28 x 46.5	⊕ ESP →07/99			91032800	ø 164 x 20		
				PRO	92106005	ø 300 x 28 x 46.5	⊕ ESP →07/99			97011600			

E-CLASS (W210) 06/95→03/02

		395100			TPM0001									
E 240 (210.061)	06/97→08/00	125 / 170												
		395200	Ate		2166404	[o] 21664 19.8			Ate		2191903	[–] 21919 15.7		
E 240 (210.062)	08/00→03/02	125 / 170	Ate	epad	2166481	[o] 21664 19.8			Ate		82058800			
					98021300	L90				PRO	92032703	ø 278 x 9 x 53.5		
			Ate		82032000						TPM0001			
			Ate		82062900						91032800	ø 164 x 20		
				PRO	92105903	ø 288 x 25 x 46.5					97011600			
					TPM0001									
		395300	Ate		2166404	[o] 21664 19.8			Ate		2191903	[–] 21919 15.7		
E 270 CDI	07/99→03/02	120 / 163	Ate	epad	2166481	[o] 21664 19.8			Ate		2189801	[o] 21898 15.7	⊕ ESP	
E 270 CDI (210.016)	07/99→03/02	125 / 170	Ate		2167001	[o] 21670 20.3	⊕ ESP		Ate	epad	2189881	[o] 21898 15.7	⊕ ESP	
			Ate	epad	2167081	[o] 21670 20.3	⊕ ESP		Ate		82058800			
					98021300	L90			Ate		82058800		⊕ ESP	
			Ate		82032000					PRO	92032703	ø 278 x 9 x 53.5		
			Ate		82062900					PRO	92072703	ø 290 x 10 x 55.2	⊕ ESP	
				PRO	92105903	ø 288 x 25 x 46.5					TPM0001			
				PRO	92106003	ø 300 x 28 x 46.5	⊕ ESP				91032800	ø 164 x 20		
				PRO	92106005	ø 300 x 28 x 46.5	⊕ ESP				97011600			
					TPM0001									
		395400	Ate		2167001	[o] 21670 20.3			Ate		2130504	[o] 21305 15.5	cal. + 2 holding pins →A379346	
E 320 (210.065)	06/97→03/02	165 / 224	Ate	epad	2167081	[o] 21670 20.3			Ate	epad	2130581	[o] 21305 15.5	cal. + 2 holding pins →A379346	
					98021300	L90			Ate		2189801	[o] 21898 15.7	cal. + 1 holding pin A379347→	
			Ate		82032000				Ate	epad	2189881	[o] 21898 15.7	cal. + 1 holding pin A379347→	
			Ate		82062900						98021301	L90		
				PRO	92106003	ø 300 x 28 x 46.5			Ate		82046000		cal. + 2 holding pins →A379346	
				PRO	92106005	ø 300 x 28 x 46.5			Ate		82058800		cal. + 1 holding pin A379347→	
					TPM0001					PRO	92072703	ø 290 x 10 x 55.2		
										PRO	92176203	ø 300 x 22 x 55.5	⊕ arm.veh. class B4	
											TPM0001			
											91032800	ø 164 x 20		
											97011600			
		395500	Ate		2115307	[o] 21153 17.5	→07/99		Ate		2130503	[o] 21305 16	cal. + 2 holding pins	
E 430 (210.070)	06/97→03/02	205 / 279	Ate		2148401	[o] 21484 20.8	08/99→		Ate	epad	2130581	[o] 21305 15.5	cal. + 2 holding pins	
			Ate		2167001	[o] 21670 20.3	⊖ arm.veh. ⊕ USA		Ate		2189801	[o] 21898 15.7	cal. + 1 holding pin	
			Ate	epad	2167081	[o] 21670 20.3	⊖ arm.veh. ⊕ USA		Ate	epad	2189881	[o] 21898 15.7	cal. + 1 holding pin	
					98021300	L90	→07/99				98021301	L90		
			Ate		82504900		→07/99		Ate		82058800		cal. + 1 holding pin	
			Ate		82032000		⊖ arm.veh. ⊕ USA			PRO	92072703	ø 290 x 10 x 55.2	⊖ AMG sport pack.	
			Ate		82062900		⊖ arm.veh. ⊕ USA			PRO	92176203	ø 300 x 22 x 55.5	⊕ arm.veh. class B4 ⊕ arm.veh. class B6	
					92073100	ø 316 x 28 x 46.5	→07/99				TPM0001			

→

30 kW / hp

E-CLASS (W210) 06/95→03/02

E 430 (210.070)	06/97→03/02	395500 205 / 279		PRO	92106003	ø 300 x 28 x 46.5	⊖ arm.veh. ⊕ USA		91032800	ø 164 x 20	
				PRO	92106005	ø 300 x 28 x 46.5	⊖ arm.veh. ⊕ USA		97011600		
				PRO	92181903	ø 330 x 32 x 47					
					TPM0001						
E 430 4-matic (210.083)	05/99→03/02	395600 205 / 279	Ate		2148401	[o] 21484 20.8		Ate	2130503	[o] 21305 16	cal. + 2 holding pins
			Ate		82059200			Ate	2130581	[o] 21305 15.5	cal. + 2 holding pins
			Ate		82062900			Ate	2189801	[o] 21898 15.7	cal. + 1 holding pin
				PRO	92181903	ø 330 x 32 x 47		Ate	2189881	[o] 21898 15.7	cal. + 1 holding pin
					TPM0001				98021301	L90	
								Ate	82058800		cal. + 1 holding pin
									92137203	ø 300 x 22 x 53.6	
									TPM0001		
									91032800	ø 164 x 20	
									91057200	ø 164 x 25	⊖ spec.purp.veh.
									97011600		
									97035500		⊖ spec.purp.veh.
E 55 AMG	09/97→02/02	395700 255 / 347	Ate		2148401	[o] 21484 20.8		Ate	2130504	[o] 21305 15.5	
					98030800	L74		Ate	2130581	[o] 21305 15.5	
			Ate		82059200				98021301	L90	
					TPM0001			Ate	82046000		
									92176203	ø 300 x 22 x 55.5	
									TPM0001		
									91057200	ø 164 x 25	
E 55 AMG (210.074)	08/97→03/02	395800 260 / 354	Ate		2148401	[o] 21484 20.8		Ate	2130503	[o] 21305 16	
E 55 AMG 4-matic (210.074)	03/01→03/02	260 / 354			98030800	L74		Ate	2130581	[o] 21305 15.5	
			Ate		82059200				98021301	L90	
			Ate		82062900			Ate	82046000		
					TPM0001				92137203	ø 300 x 22 x 53.6	
									TPM0001		
									91032800	ø 164 x 20	
									91057200	ø 164 x 25	⊕ arm.veh.
									97011600		
									97035500		⊕ arm.veh.

E-CLASS (W211) 03/02→03/09

E 200 CDI (211.004)	07/02→12/08	395900 75 / 102	Bos		2374303	[+] 23743 20.5		Ate	2333403	[o] 23334 16.8	
E 200 CDI (211.004)	07/02→12/08	90 / 122	Bos		2374381	[+] 23743 20.5		Ate	2333481	[o] 23334 16.8	
E 200 CDI (211.007)	04/06→12/08	100 / 136									
E 200 NGT (211.041)	03/04→12/08	120 / 163									
E 220 CDI	03/03→12/08	120 / 163			98024701	L95	right		98024701	L95	
E 220 CDI (211.006)	03/02→12/08	100 / 136									
E 220 CDI (211.006)	03/02→12/08	110 / 150			98029400		left	Ate	82062900		
E 220 CDI (211.008)	04/06→12/08	125 / 170									
E 240 (211.061)	03/02→12/08	130 / 177	Bos		82039900			Ate	82076400		
			Bos		82063800				92115403	ø 300 x 10 x 68.5	⊖ rent. veh. ⊖ taxi

I - M

E-CLASS (W211) 03/02→03/09

			395900	Bos		82510100						92115405	ø 300 x 10 x 68.5	⊖ rent. veh. ⊖ taxi
E 200 CDI (211.004)	07/02→12/08	75 / 102												
E 200 CDI (211.004)	07/02→12/08	90 / 122			PRO	92115103	ø 295 x 28 x 54.5	⊖ rent. veh. ⊖ taxi			PRO	92115503	ø 300 x 22 x 68	⊕ rent. veh. ⊕ taxi
E 200 CDI (211.007)	04/06→12/08	100 / 136												
E 200 NGT (211.041)	03/04→12/08	120 / 163			PRO	92115105	ø 295 x 28 x 54.5	⊖ rent. veh. ⊖ taxi			PRO	92115505	ø 300 x 22 x 68	⊕ rent. veh. ⊕ taxi
E 220 CDI	03/03→12/08	120 / 163												
E 220 CDI (211.006)	03/02→12/08	100 / 136			PRO	92115203	ø 295 x 28 x 54.5	⊕ rent. veh. ⊕ taxi				91058800	ø 180 x 25	
E 220 CDI (211.006)	03/02→12/08	110 / 150												
E 220 CDI (211.008)	04/06→12/08	125 / 170			PRO	92115205	ø 295 x 28 x 54.5	⊕ rent. veh. ⊕ taxi				97035400		
E 240 (211.061)	03/02→12/08	130 / 177												
			396000	Bre		2374502	[o] 23745 17.7	⊕ AMG sport pack. ⊕ sport pack.	Ate		2333403	[o] 23334 16.8	
E 200 Kompressor (211.041)	04/06→12/08	135 / 184												
E 200 Kompressor (211.042)	11/02→12/08	120 / 163		Bre	epad	2374581	[o] 23745 17.7	⊕ AMG sport pack. ⊕ sport pack.	Ate	epad	2333481	[o] 23334 16.8	
				Bos		2374303	[+] 23743 20.5	⊖ AMG sport pack. ⊖ sport pack.				98024701	L95	
				Bos	epad	2374381	[+] 23743 20.5	⊖ AMG sport pack. ⊖ sport pack.	Ate			82062900		
						98024701	L95	right	Ate			82076400		
						98029400		left		PRO		92115403	ø 300 x 10 x 68.5	⊖ rent. veh. ⊖ taxi ⊖ sport pack. ⊖ AMG sport pack.
				Bos		82039900				PRO		92115405	ø 300 x 10 x 68.5	⊖ rent. veh. ⊖ taxi ⊖ sport pack. ⊖ AMG sport pack.
				Bre		82504800		⊕ sport pack. ⊕ AMG sport pack.		PRO		92115503	ø 300 x 22 x 68	⊕ rent. veh. ⊕ taxi ⊕ sport pack. ⊕ AMG sport pack.
				Bos		82063800				PRO		92115505	ø 300 x 22 x 68	⊕ rent. veh. ⊕ taxi ⊕ sport pack. ⊕ AMG sport pack.
				Bos		82510100						91058800	ø 180 x 25	
					PRO	92115103	ø 295 x 28 x 54.5	⊖ rent. veh. ⊖ taxi ⊖ sport pack. ⊖ AMG sport pack.				97035400		
					PRO	92115105	ø 295 x 28 x 54.5	⊖ rent. veh. ⊖ taxi ⊖ sport pack. ⊖ AMG sport pack.						
			396100	Bre		2374502	[o] 23745 17.7	⊕ sport pack. ⊕ AMG sport pack.	Ate		2333403	[o] 23334 16.8	
E 230 (211.052)	09/07→12/08	150 / 204												
				Bre	epad	2374581	[o] 23745 17.7	⊕ sport pack. ⊕ AMG sport pack.	Ate	epad	2333481	[o] 23334 16.8	
				Bos		2374303	[+] 23743 20.5	⊖ sport pack. ⊖ AMG sport pack.				98024701	L95	
				Bos	epad	2374381	[+] 23743 20.5	⊖ sport pack. ⊖ AMG sport pack.	Ate			82062900		
						98024701	L95		Ate			82076400		
				Bre		82504800		⊕ sport pack. ⊕ AMG sport pack.		PRO		92115403	ø 300 x 10 x 68.5	⊖ sport pack. ⊖ AMG sport pack.
					PRO	92115203	ø 295 x 28 x 54.5	⊖ sport pack. ⊖ AMG sport pack.		PRO		92115405	ø 300 x 10 x 68.5	⊖ sport pack. ⊖ AMG sport pack.
					PRO	92115205	ø 295 x 28 x 54.5	⊖ sport pack. ⊖ AMG sport pack.		PRO		92115503	ø 300 x 22 x 68	⊕ sport pack. ⊕ AMG sport pack.
					PRO	92120203	ø 330 x 32 x 64.5	⊕ sport pack. ⊕ AMG sport pack.		PRO		92115505	ø 300 x 22 x 68	⊕ sport pack. ⊕ AMG sport pack.
												91058800	ø 180 x 25	
												97035400		
			396200	Ate		2148401	[o] 21484 20.8	→10/05 →X 196564 ⊕ sport pack. ⊕ AMG sport pack.	Ate		2333403	[o] 23334 16.8	
E 240 4-matic (211.080)	03/03→12/08	130 / 177												
E 320 CDI 4-matic	03/05→12/08	165 / 224		Ate		2392201	[o] 23922 21	11/05→ X 196565→ ⊕ sport pack. ⊕ AMG sport pack.	Ate	epad	2333481	[o] 23334 16.8	
				Ate	epad	2392281	[o] 23922 21	11/05→ X 196565→ ⊕ sport pack. ⊕ AMG sport pack.				98024701	L95	
				Ate		2472201	[o] 24722 19	⊖ sport pack. ⊖ AMG sport pack.	Ate			82062900		
				Ate	epad	2472281	[o] 24722 19	⊖ sport pack. ⊖ AMG sport pack.	Ate			82076400		
						98024701	L95	right		PRO		92115503	ø 300 x 22 x 68	
						98029400		left		PRO		92115505	ø 300 x 22 x 68	
				Ate		82059200						TPM0002		
						92152100	ø 304 x 30 x 47.4	⊖ sport pack. ⊖ AMG sport pack.				91058800	ø 180 x 25	
					PRO	92152103	ø 304 x 30 x 47.4	⊖ sport pack. ⊖ AMG sport pack.				97035400		
					PRO	92152105	ø 304 x 30 x 47.4	⊖ sport pack. ⊖ AMG sport pack.						
						92124100	ø 330 x 32 x 47.5	⊕ sport pack. ⊕ AMG sport pack.						

30 kW / hp

E-CLASS (W211) 03/02→03/09

396200															
E 240 4-matic (211.080)	03/03→12/08	130 / 177			TPM0002										
E 320 CDI 4-matic	03/05→12/08	165 / 224													
396300			Bos		2374303	[+] 23743 20.5		Ate		2333403	[o] 23334 16.8				
E 270 CDI (211.016)	03/02→12/08	120 / 163													
E 270 CDI (211.016)	03/02→12/08	130 / 177	Bos	epad	2374381	[+] 23743 20.5		Ate	epad	2333481	[o] 23334 16.8				
					98024701	L95	right			98024701	L95				
					98029400		left	Ate		82062900					
			Bos		82039900			Ate		82076400					
			Bos		82063800				PRO	92115403	ø 300 x 10 x 68.5	⊖ rent. veh. ⊖ taxi			
			Bos		82510100				PRO	92115405	ø 300 x 10 x 68.5	⊖ rent. veh. ⊖ taxi			
				PRO	92115203	ø 295 x 28 x 54.5			PRO	92115503	ø 300 x 22 x 68	⊕ rent. veh. ⊕ taxi			
				PRO	92115205	ø 295 x 28 x 54.5			PRO	92115505	ø 300 x 22 x 68	⊕ rent. veh. ⊕ taxi			
										91058800	ø 180 x 25				
										97035400					
396400			Bre		2374502	[o] 23745 17.7	⊕ AMG sport pack. ⊕ sport pack.	Ate		2333403	[o] 23334 16.8				
E 280 (211.054)	03/05→12/08	170 / 231	Bre	epad	2374581	[o] 23745 17.7	⊕ AMG sport pack. ⊕ sport pack.	Ate	epad	2333481	[o] 23334 16.8				
			Bos		2374303	[+] 23743 20.5	⊖ AMG sport pack. ⊖ sport pack.			98024701	L95				
			Bos	epad	2374381	[+] 23743 20.5	⊖ AMG sport pack. ⊖ sport pack.	Ate		82062900					
					98024701	L95		Ate		82076400					
			Bos		82039900				PRO	92115403	ø 300 x 10 x 68.5	⊕ J ⊕ USA ⊕ AUS ⊖ sport pack. ⊖ AMG sport pack.			
			Bre		82504800		⊕ sport pack. ⊕ AMG sport pack.		PRO	92115405	ø 300 x 10 x 68.5	⊕ J ⊕ USA ⊕ AUS ⊖ sport pack. ⊖ AMG sport pack.			
			Bos		82063800				PRO	92115503	ø 300 x 22 x 68	⊖ J ⊖ USA ⊖ AUS ⊕ sport pack. ⊕ AMG sport pack.			
			Bos		82510100				PRO	92115505	ø 300 x 22 x 68	⊖ J ⊖ USA ⊖ AUS ⊕ sport pack. ⊕ AMG sport pack.			
				PRO	92115203	ø 295 x 28 x 54.5				91058800	ø 180 x 25				
				PRO	92115205	ø 295 x 28 x 54.5				97035400					
396500			Ate		2392201	[o] 23922 21	⊕ sport pack. ⊕ AMG sport pack.	Ate		2333403	[o] 23334 16.8				
E 280 4-matic (211.092)	01/06→12/08	170 / 231	Ate	epad	2392281	[o] 23922 21	⊕ sport pack. ⊕ AMG sport pack.	Ate	epad	2333481	[o] 23334 16.8				
			Ate		2472201	[o] 24722 19	⊖ sport pack. ⊖ AMG sport pack.			98024701	L95				
			Ate	epad	2472281	[o] 24722 19	⊖ sport pack. ⊖ AMG sport pack.	Ate		82062900					
					98024701	L95	right ⊖ sport pack.	Ate		82076400					
					98029400		left ⊖ sport pack.		PRO	92115403	ø 300 x 10 x 68.5				
					98040100	L95	right ⊕ sport pack.		PRO	92115405	ø 300 x 10 x 68.5				
			Ate		82059200					TPM0002					
					92152100	ø 304 x 30 x 47.4	⊖ sport pack. ⊖ AMG sport pack.			91058800	ø 180 x 25				
				PRO	92152103	ø 304 x 30 x 47.4	⊖ sport pack. ⊖ AMG sport pack.			97035400					
				PRO	92152105	ø 304 x 30 x 47.4	⊖ sport pack. ⊖ AMG sport pack.								
					92124100	ø 330 x 32 x 47.5	⊕ sport pack. ⊕ AMG sport pack.								
					TPM0002										
396600			Bre		2374502	[o] 23745 17.7	⊕ AMG sport pack. ⊕ sport pack. ⊕ arm.veh.	Ate		2333403	[o] 23334 16.8				
E 280 CDI (211.020)	03/05→12/08	140 / 190	Bre	epad	2374581	[o] 23745 17.7	⊕ AMG sport pack. ⊕ sport pack. ⊕ arm.veh.	Ate	epad	2333481	[o] 23334 16.8				
			Bos		2374303	[+] 23743 20.5	⊖ AMG sport pack. ⊖ sport pack. ⊖ arm.veh.			98024701	L95				
			Bos	epad	2374381	[+] 23743 20.5	⊖ AMG sport pack. ⊖ sport pack. ⊖ arm.veh.	Ate		82062900					

kW / hp

E-CLASS (W211) 03/02→03/09

396600													
E 280 CDI (211.020)	03/05→12/08	140 / 190			98024701	L95		Ate		82076400		
			Bos		82039900				PRO	92115403	ø 300 x 10 x 68.5	⊖ sport pack. ⊖ AMG sport pack. ⊕ arm.veh.
			Bre		82504800		⊕ AMG sport pack. ⊕ sport pack. ⊕ arm.veh.		PRO	92115405	ø 300 x 10 x 68.5	⊖ sport pack. ⊖ AMG sport pack. ⊕ arm.veh.
			Bos		82063800				PRO	92115503	ø 300 x 22 x 68	⊕ sport pack. ⊕ AMG sport pack. ⊖ arm.veh.
			Bos		82510100				PRO	92115505	ø 300 x 22 x 68	⊕ sport pack. ⊕ AMG sport pack. ⊖ arm.veh.
				PRO	92115203	ø 295 x 28 x 54.5	⊖ AMG sport pack. ⊖ sport pack. ⊖ arm.veh.			91058800	ø 180 x 25	
				PRO	92115205	ø 295 x 28 x 54.5	⊖ AMG sport pack. ⊖ sport pack. ⊖ arm.veh.			97035400		
				PRO	92119903	ø 330 x 32 x 64.5	⊖ AMG sport pack. ⊖ sport pack. ⊕ arm.veh.					
				PRO	92119905	ø 330 x 32 x 64.5	⊖ AMG sport pack. ⊖ sport pack. ⊕ arm.veh.					
				PRO	92120203	ø 330 x 32 x 64.5	⊕ AMG sport pack. ⊕ sport pack. ⊖ arm.veh.					
396700												
E 280 CDI (211.023)	05/04→12/08	130 / 177	Bre		2374502	[o] 23745 17.7	⊕ arm.veh.	Ate		2333403	[o] 23334 16.8	
			Bre	epad	2374581	[o] 23745 17.7	⊕ arm.veh.	Ate	epad	2333481	[o] 23334 16.8	
			Bos		2374303	[+] 23743 20.5	⊖ arm.veh.			98024701	L95	
			Bos	epad	2374381	[+] 23743 20.5	⊖ arm.veh.	Ate		82062900		
					98024701	L95	right	Ate		82076400		
					98029400		left		PRO	92115403	ø 300 x 10 x 68.5	⊕ USA
			Bos		82039900				PRO	92115405	ø 300 x 10 x 68.5	⊕ USA
			Bre		82504800		⊕ arm.veh.		PRO	92115503	ø 300 x 22 x 68	⊖ USA
			Bos		82063800				PRO	92115505	ø 300 x 22 x 68	⊖ USA
			Bos		82510100					91058800	ø 180 x 25	
				PRO	92115203	ø 295 x 28 x 54.5				97035400		
				PRO	92115205	ø 295 x 28 x 54.5						
396800												
E 280 CDI 4-matic	03/05→12/08	140 / 190	Ate		2148401	[o] 21484 20.8	→10/05 →X 196564 ⊕ sport pack. ⊕ AMG sport pack.	Ate		2333403	[o] 23334 16.8	
E 350 4-matic	08/04→08/06	205 / 279	Ate		2392201	[o] 23922 21	11/05→ X 196565→ ⊕ sport pack. ⊕ AMG sport pack.	Ate	epad	2333481	[o] 23334 16.8	
E 350 4-matic (211.087)	03/05→12/08	200 / 272	Ate	epad	2392281	[o] 23922 21	11/05→ X 196565→ ⊕ sport pack. ⊕ AMG sport pack.			98024701	L95	
			Ate		2472201	[o] 24722 19	⊖ sport pack. ⊖ AMG sport pack.	Ate		82062900		
			Ate	epad	2472281	[o] 24722 19	⊖ sport pack. ⊖ AMG sport pack.	Ate		82076400		
					98024701	L95	right ⊖ sport pack.		PRO	92115503	ø 300 x 22 x 68	
					98029400		left ⊖ sport pack.		PRO	92115505	ø 300 x 22 x 68	
					98040100	L95	right ⊕ sport pack.			TPM0002		
			Ate		82059200					91058800	ø 180 x 25	
					92152100	ø 304 x 30 x 47.4	⊖ sport pack. ⊖ AMG sport pack.			97035400		
				PRO	92152103	ø 304 x 30 x 47.4	⊖ sport pack. ⊖ AMG sport pack.					
				PRO	92152105	ø 304 x 30 x 47.4	⊖ sport pack. ⊖ AMG sport pack.					
					92124100	ø 330 x 32 x 47.5	⊕ sport pack. ⊕ AMG sport pack.					
					TPM0002							
396900												
E 300 4-matic	09/08→03/09	170 / 231			TPM0002					TPM0002		
397000												
E 300 BlueTEC	09/07→12/08	155 / 211	Bre		2374502	[o] 23745 17.7	⊕ sport pack. ⊕ AMG sport pack. ⊕ arm.veh.	Ate		2333403	[o] 23334 16.8	
			Bre	epad	2374581	[o] 23745 17.7	⊕ sport pack. ⊕ AMG sport pack. ⊕ arm.veh.	Ate	epad	2333481	[o] 23334 16.8	
			Bos		2374303	[+] 23743 20.5	⊖ sport pack. ⊖ AMG sport pack. ⊖ arm.veh.			98024701	L95	

→

kW / hp

E-CLASS (W211) 03/02→03/09

397000														
E 300 BlueTEC	09/07→12/08	155 / 211	Bos	epad	2374381	[+] 23743 20.5	⊖ sport pack. ⊖ AMG sport pack. ⊖ arm.veh.	Ate		82062900		
					98024701	L95		Ate		82076400		
			Bos		82039900			PRO		92115403	ø 300 x 10 x 68.5	⊕ J ⊕ USA ⊕ AUS ⊕ arm.veh.
			Bre		82504800		⊕ sport pack. ⊕ AMG sport pack. ⊕ arm.veh.	PRO		92115405	ø 300 x 10 x 68.5	⊕ J ⊕ USA ⊕ AUS ⊕ arm.veh.
			Bos		82063800			PRO		92115503	ø 300 x 22 x 68	⊕ sport pack. ⊕ AMG sport pack. ⊖ sport pack. ⊖ arm.veh.
			Bos		82510100			PRO		92115505	ø 300 x 22 x 68	⊕ sport pack. ⊕ AMG sport pack. ⊖ sport pack. ⊖ arm.veh.
				PRO	92115203	ø 295 x 28 x 54.5	⊕ sport pack. ⊕ AMG sport pack. ⊖ sport pack. ⊖ arm.veh.			91058800	ø 180 x 25	
				PRO	92115205	ø 295 x 28 x 54.5	⊕ sport pack. ⊕ AMG sport pack. ⊖ sport pack. ⊖ arm.veh.			97035400		
				PRO	92119903	ø 330 x 32 x 64.5	⊕ arm.veh.					
				PRO	92119905	ø 330 x 32 x 64.5	⊕ arm.veh.					
397100												
E 320 (211.065)	03/02→12/08	165 / 224	Bre		2374502	[o] 23745 17.7	⊖ J ⊖ USA ⊖ AUS →A400547 →X112804 ⊕ arm.veh.	Ate		2333403	[o] 23334 16.8	
			Bre	epad	2374581	[o] 23745 17.7	⊖ J ⊖ USA ⊖ AUS →A400547 →X112804 ⊕ arm.veh.	Ate	epad	2333481	[o] 23334 16.8	
										98024701	L95	
			Bos		2374303	[+] 23743 20.5	⊕ AUS ⊕ J ⊕ USA A400548→ X112805→ ⊖ arm.veh.	Ate		82062900		
			Bos	epad	2374381	[+] 23743 20.5	⊕ AUS ⊕ J ⊕ USA A400548→ X112805→ ⊖ arm.veh.	Ate		82076400		
					98024701	L95	right	PRO		92115403	ø 300 x 10 x 68.5	⊕ J ⊕ USA ⊕ AUS →A400547 →X112804 ⊖ arm.veh. ⊖ rent. veh. ⊖ taxi
					98029400		left	PRO		92115405	ø 300 x 10 x 68.5	⊕ J ⊕ USA ⊕ AUS →A400547 →X112804 ⊖ arm.veh. ⊖ rent. veh. ⊖ taxi
			Bos		82039900			PRO		92115503	ø 300 x 22 x 68	⊖ J ⊖ USA ⊖ AUS A400548→ X112805→ ⊕ arm.veh. ⊕ rent. veh. ⊕ taxi
			Bre		82504800		⊖ J ⊖ USA ⊖ AUS →A400547 →X112804 ⊕ arm.veh.	PRO		92115505	ø 300 x 22 x 68	⊖ J ⊖ USA ⊖ AUS A400548→ X112805→ ⊕ arm.veh. ⊕ rent. veh. ⊕ taxi
			Bos		82063800							
			Bos		82510100					91058800	ø 180 x 25	
				PRO	92115203	ø 295 x 28 x 54.5	⊕ AUS ⊕ J ⊕ USA A400548→ X112805→			97035400		
				PRO	92115205	ø 295 x 28 x 54.5	⊕ AUS ⊕ J ⊕ USA A400548→ X112805→					
				PRO	92115303	ø 312 x 28 x 64.5	⊖ USA ⊖ J ⊖ AUS →A400547 →112804					
397200												
E 320 4-matic (211.082)	03/03→12/08	165 / 224	Ate		2148401	[o] 21484 20.8	→10/05 →X 196564 ⊕ sport pack. ⊕ AMG sport pack.	Ate		2333403	[o] 23334 16.8	
			Ate		2392201	[o] 23922 21	11/05→ X 196565→ ⊕ sport pack. ⊕ AMG sport pack.	Ate	epad	2333481	[o] 23334 16.8	
			Ate	epad	2392281	[o] 23922 21	11/05→ X 196565→ ⊕ sport pack. ⊕ AMG sport pack.			98024701	L95	
			Ate		2472201	[o] 24722 19	⊖ sport pack. ⊖ AMG sport pack.	Ate		82062900		
			Ate	epad	2472281	[o] 24722 19	⊖ sport pack. ⊖ AMG sport pack.	Ate		82076400		
					98024701	L95	right	PRO		92115403	ø 300 x 10 x 68.5	⊕ J ⊕ USA X 122526→ 01/04→
					98029400		left	PRO		92115405	ø 300 x 10 x 68.5	⊕ J ⊕ USA X 122526→ 01/04→
			Ate		82059200			PRO		92115503	ø 300 x 22 x 68	→X 122525 →01/04
					92152100	ø 304 x 30 x 47.4	⊖ sport pack. ⊖ AMG sport pack.	PRO		92115505	ø 300 x 22 x 68	→X 122525 →01/04
				PRO	92152103	ø 304 x 30 x 47.4	⊖ sport pack. ⊖ AMG sport pack.			TPM0002		
				PRO	92152105	ø 304 x 30 x 47.4	⊖ sport pack. ⊖ AMG sport pack.			91058800	ø 180 x 25	
					92124100	ø 330 x 32 x 47.5	⊕ sport pack. ⊕ AMG sport pack.			97035400		
					TPM0002							
397300												
E 320 BlueTEC (211.022)	09/08→03/09	156 / 212	Bre		2374502	[o] 23745 17.7	⊕ sport pack. ⊕ AMG sport pack.	Ate		2333403	[o] 23334 16.8	
			Bre	epad	2374581	[o] 23745 17.7	⊕ sport pack. ⊕ AMG sport pack.	Ate	epad	2333481	[o] 23334 16.8	

I - M

E-CLASS (W211) 03/02→03/09

		30	kW / hp												
E 320 BlueTEC (211.022)	09/08→03/09	397300	156 / 212	Bos	epad	2374303	[+] 23743 20.5	⊕ J ⊕ USA ⊕ AUS				98024701	L95	
				Bos	epad	2374381	[+] 23743 20.5	⊕ J ⊕ USA ⊕ AUS		Ate		82076400		
						98024701	L95				PRO	92115403	ø 300 x 10 x 68.5	⊕ J ⊕ USA ⊕ AUS
				Bre		82504800					PRO	92115405	ø 300 x 10 x 68.5	⊕ J ⊕ USA ⊕ AUS
					PRO	92115203	ø 295 x 28 x 54.5	⊕ sport pack. ⊕ AMG sport pack.			PRO	92115503	ø 300 x 22 x 68	⊕ sport pack. ⊕ AMG sport pack.
					PRO	92115205	ø 295 x 28 x 54.5	⊕ sport pack. ⊕ AMG sport pack.			PRO	92115505	ø 300 x 22 x 68	⊕ sport pack. ⊕ AMG sport pack.
					PRO	92119903	ø 330 x 32 x 64.5	⊕ arm.veh. class B4				TPM0002		
					PRO	92119905	ø 330 x 32 x 64.5	⊕ arm.veh. class B4				91058800	ø 180 x 25	
						TPM0002								
E320 CDI	09/06→12/08	397400	157 / 214	Bos	epad	2374303	[+] 23743 20.5			Ate		2333403	[o] 23334 16.8	
				Bos	epad	2374381	[+] 23743 20.5			Ate	epad	2333481	[o] 23334 16.8	
				Bre		82504800						98024701	L95	
					PRO	92115203	ø 295 x 28 x 54.5			Ate		82076400		
					PRO	92115205	ø 295 x 28 x 54.5				PRO	92115503	ø 300 x 22 x 68	
						TPM0002					PRO	92115505	ø 300 x 22 x 68	
												TPM0002		
												91058800	ø 180 x 25	
E 320 CDI (211.022)	03/05→12/08	397500	165 / 224	Bre	epad	2374502	[o] 23745 17.7	⊖ J ⊖ AUS ⊕ sport pack. ⊕ AMG sport pack.		Ate		2333403	[o] 23334 16.8	
				Bre	epad	2374581	[o] 23745 17.7	⊖ J ⊖ AUS ⊕ sport pack. ⊕ AMG sport pack.		Ate	epad	2333481	[o] 23334 16.8	
				Bos	epad	2374303	[+] 23743 20.5	⊕ AUS ⊕ J ⊖ sport pack. ⊖ AMG sport pack.				98024701	L95	
				Bos	epad	2374381	[+] 23743 20.5	⊕ AUS ⊕ J ⊖ sport pack. ⊖ AMG sport pack.		Ate		82062900		
						98024701	L95			Ate		82076400		
				Bos		82039900					PRO	92115403	ø 300 x 10 x 68.5	⊕ J ⊕ USA ⊕ AUS ⊖ sport pack. ⊖ AMG sport pack.
				Bre		82504800		⊖ J ⊖ AUS ⊕ sport pack. ⊕ AMG sport pack.			PRO	92115405	ø 300 x 10 x 68.5	⊕ J ⊕ USA ⊕ AUS ⊖ sport pack. ⊖ AMG sport pack.
				Bos		82063800					PRO	92115503	ø 300 x 22 x 68	⊖ J ⊖ USA ⊖ AUS ⊕ sport pack. ⊕ AMG sport pack.
				Bos		82510100					PRO	92115505	ø 300 x 22 x 68	⊖ J ⊖ USA ⊖ AUS ⊕ sport pack. ⊕ AMG sport pack.
					PRO	92115203	ø 295 x 28 x 54.5	⊖ sport pack. ⊖ AMG sport pack.				91058800	ø 180 x 25	
					PRO	92115205	ø 295 x 28 x 54.5	⊖ sport pack. ⊖ AMG sport pack.				97035400		
					PRO	92120203	ø 330 x 32 x 64.5	⊕ sport pack. ⊕ AMG sport pack.						
E 320 CDI (211.026)	11/02→12/08	397600	150 / 204	Bre	epad	2374502	[o] 23745 17.7	→A400547 →X112804 ⊖ J ⊖ USA ⊖ AUS		Ate		2333403	[o] 23334 16.8	
				Bre	epad	2374581	[o] 23745 17.7	→A400547 →X112804 ⊖ J ⊖ USA ⊖ AUS		Ate	epad	2333481	[o] 23334 16.8	
				Bos	epad	2374303	[+] 23743 20.5	⊕ AUS ⊕ J ⊕ USA A400548→ X112805→				98024701	L95	
				Bos	epad	2374381	[+] 23743 20.5	⊕ AUS ⊕ J ⊕ USA A400548→ X112805→		Ate		82062900		
						98024701	L95	right		Ate		82076400		
						98029400		left			PRO	92115403	ø 300 x 10 x 68.5	⊖ arm.veh. ⊖ rent. veh. ⊖ taxi ⊕ USA →A400547 →X112804
				Bos		82039900					PRO	92115405	ø 300 x 10 x 68.5	⊖ arm.veh. ⊖ rent. veh. ⊖ taxi ⊕ USA →A400547 →X112804
				Bre		82504800		→A400547 →X112804 ⊖ J ⊖ USA ⊖ AUS			PRO	92115503	ø 300 x 22 x 68	⊕ arm.veh. ⊕ rent. veh. ⊕ taxi ⊖ USA A400548→ X112805→
				Bos		82063800					PRO	92115505	ø 300 x 22 x 68	⊕ arm.veh. ⊕ rent. veh. ⊕ taxi ⊖ USA A400548→ X112805→
				Bos		82510100								
					PRO	92115203	ø 295 x 28 x 54.5	⊕ USA A400548→ X112805→ ⊕ arm.veh.				91058800	ø 180 x 25	

E-CLASS (W211) 03/02→03/09

397600 E 320 CDI (211.026)	11/02→12/08	150 / 204		PRO	92115205	ø 295 x 28 x 54.5	⊕ USA A400548→ X112805→ ⊕ arm.veh.			97035400			
				PRO	92115303	ø 312 x 28 x 64.5	⊖ USA →A400547 →X112804 ⊖ arm.veh.						
397700 E 350 (211.056)	03/05→12/08	200 / 272	Bre		2374502	[o] 23745 17.7		Ate		2333403	[o] 23334 16.8		
			Bre	epad	2374581	[o] 23745 17.7		Ate	epad	2333481	[o] 23334 16.8		
			Bos		2374303	[+] 23743 20.5	⊕ USA ⊖ sport pack. ⊖ AMG sport pack.			98024701	L95		
			Bos	epad	2374381	[+] 23743 20.5	⊕ USA ⊖ sport pack. ⊖ AMG sport pack.	Ate		82062900			
					98024701	L95	right	Ate		82076400			
					98029400		left →A832532 →2005-06-30		PRO	92115403	ø 300 x 10 x 68.5	⊕ J ⊕ AUS ⊕ USA →A870950 ⊖ sport pack. ⊖ AMG sport pack.	
			Bos		82039900				PRO	92115405	ø 300 x 10 x 68.5	⊕ J ⊕ AUS ⊕ USA →A870950 ⊖ sport pack. ⊖ AMG sport pack.	
			Bre		82504800								
			Bre		82518800		⊕ AUS ⊕ J ⊖ sport pack. ⊖ AMG sport pack.		PRO	92115503	ø 300 x 22 x 68	⊕ USA A870951→ ⊖ J ⊖ AUS ⊕ sport pack. ⊕ AMG sport pack.	
			Bos		82063800				PRO	92115505	ø 300 x 22 x 68	⊕ USA A870951→ ⊖ J ⊖ AUS ⊕ sport pack. ⊕ AMG sport pack.	
			Bos		82510100					91058800	ø 180 x 25		
				PRO	92115203	ø 295 x 28 x 54.5	⊕ USA A870951→ ⊖ sport pack. ⊖ AMG sport pack.			97035400			
				PRO	92115205	ø 295 x 28 x 54.5	⊕ USA A870951→ ⊖ sport pack. ⊖ AMG sport pack.						
				PRO	92115303	ø 312 x 28 x 64.5	⊕ USA →A870950 ⊕ J ⊕ AUS ⊖ sport pack. ⊖ AMG sport pack.						
				PRO	92120203	ø 330 x 32 x 64.5	⊕ sport pack. ⊕ AMG sport pack.						
397800 E 350 CGI (211.057)	09/07→12/08	215 / 292	Bre		2374502	[o] 23745 17.7		Ate		2333403	[o] 23334 16.8		
			Bre	epad	2374581	[o] 23745 17.7		Ate	epad	2333481	[o] 23334 16.8		
			Bos		2374303	[+] 23743 20.5	⊕ USA ⊖ sport pack. ⊖ AMG sport pack.			98024701	L95		
			Bos	epad	2374381	[+] 23743 20.5	⊕ USA ⊖ sport pack. ⊖ AMG sport pack.	Ate		82062900			
					98024701	L95		Ate		82076400			
			Bos		82039900				PRO	92115403	ø 300 x 10 x 68.5	⊕ J ⊕ AUS ⊕ USA A870951→ ⊖ sport pack. ⊖ AMG sport pack.	
			Bre		82504800				PRO	92115405	ø 300 x 10 x 68.5	⊕ J ⊕ AUS ⊕ USA A870951→ ⊖ sport pack. ⊖ AMG sport pack.	
			Bre		82518800		⊕ J ⊖ sport pack. ⊖ AMG sport pack.		PRO	92115503	ø 300 x 22 x 68	⊕ sport pack. ⊕ AMG sport pack. ⊖ sport pack.	
			Bos		82063800				PRO	92115505	ø 300 x 22 x 68	⊕ sport pack. ⊕ AMG sport pack. ⊖ sport pack.	
			Bos		82510100					91058800	ø 180 x 25		
				PRO	92115203	ø 295 x 28 x 54.5	⊕ USA A870951→ ⊕ sport pack. ⊕ AMG sport pack.			97035400			
				PRO	92115205	ø 295 x 28 x 54.5	⊕ USA A870951→ ⊕ sport pack. ⊕ AMG sport pack.						
				PRO	92115303	ø 312 x 28 x 64.5	⊕ J ⊕ AUS						
				PRO	92119903	ø 330 x 32 x 64.5	⊖ sport pack. ⊖ AMG sport pack.						
				PRO	92119905	ø 330 x 32 x 64.5	⊖ sport pack. ⊖ AMG sport pack.						
397900 E 400 CDI (211.028)	02/03→12/08	191 / 260	Bre		2374502	[o] 23745 17.7		Ate		2333403	[o] 23334 16.8		
			Bre	epad	2374581	[o] 23745 17.7		Ate	epad	2333481	[o] 23334 16.8		
					98024701	L95	right			98024701	L95		
					98029400		left	Ate		82062900			
			Bre		82504800			Ate		82076400			
				PRO	92115303	ø 312 x 28 x 64.5	⊕ AUS ⊕ J ⊕ USA		PRO	92115503	ø 300 x 22 x 68		
				PRO	92119903	ø 330 x 32 x 64.5			PRO	92115505	ø 300 x 22 x 68		

kW / hp

E-CLASS (W211) 03/02→03/09

E 400 CDI (211.028) 02/03→12/08 397900 191 / 260			PRO	92119905	ø 330 x 32 x 64.5				91058800	ø 180 x 25	
									97035400		
E 420 CDI (211.029) 01/06→12/08 398000 231 / 314	Bre		2396001	[o] 23960 17.8		Ate		2333403	[o] 23334 16.8	
	Bre	epad	2396081	[o] 23960 17.8		Ate	epad	2333481	[o] 23334 16.8	
			98036401	L98				98024701	L95	
	Bre		82504000			Ate		82062900		
		PRO	92176403	ø 350 x 32 x 64.5	⊕ sport pack. ⊕ AMG sport pack.	Ate		82076400		
								91058800	ø 180 x 25	
								97035400		
E 500 09/02→12/05 398100 215 / 292	Bre		2374502	[o] 23745 17.7		Ate		2333403	[o] 23334 16.8	
	Bre	epad	2374581	[o] 23745 17.7		Ate	epad	2333481	[o] 23334 16.8	
			98024701	L95	right			98024701	L95	
			98029400		left	Ate		82076400		right
	Bre		82504800				PRO	92115403	ø 300 x 10 x 68.5	⊕ USA
		PRO	92115303	ø 312 x 28 x 64.5	⊕ USA ⊕ AUS		PRO	92115405	ø 300 x 10 x 68.5	⊕ USA
		PRO	92119903	ø 330 x 32 x 64.5	⊖ sport pack. ⊖ AMG sport pack.		PRO	92115503	ø 300 x 22 x 68	⊖ USA
		PRO	92119905	ø 330 x 32 x 64.5	⊖ sport pack. ⊖ AMG sport pack.		PRO	92115505	ø 300 x 22 x 68	⊖ USA
		PRO	92120203	ø 330 x 32 x 64.5	⊕ sport pack. ⊕ AMG sport pack.			TPM0002		
								91058800	ø 180 x 25	
E 500 (211.070) 03/02→12/08 398200 225 / 306	Bre		2374502	[o] 23745 17.7		Ate		2333403	[o] 23334 16.8	
	Bre	epad	2374581	[o] 23745 17.7		Ate	epad	2333481	[o] 23334 16.8	
			98024701	L95	right →989999 →2006-06-30			98024701	L95	
			98029400		left	Ate		82062900		
	Bre		82504800			Ate		82076400		
	Bre		82518800		⊕ AUS ⊕ J ⊖ sport pack. ⊖ AMG sport pack.		PRO	92115403	ø 300 x 10 x 68.5	⊕ USA
		PRO	92115303	ø 312 x 28 x 64.5	⊕ AUS ⊕ J ⊕ USA ⊖ arm.veh.		PRO	92115405	ø 300 x 10 x 68.5	⊕ USA
		PRO	92119903	ø 330 x 32 x 64.5	⊖ sport pack. ⊖ AMG sport pack. ⊕ arm.veh.		PRO	92115503	ø 300 x 22 x 68	⊖ USA
		PRO	92119905	ø 330 x 32 x 64.5	⊖ sport pack. ⊖ AMG sport pack. ⊕ arm.veh. ⊖ sport pack. ⊖ AMG sport pack.		PRO	92115505	ø 300 x 22 x 68	⊖ USA
		PRO	92120203	ø 330 x 32 x 64.5	⊕ sport pack. ⊕ AMG sport pack.			91058800	ø 180 x 25	
								97035400		
E 500 (211.072) 04/06→12/08 398300 285 / 388	Bre		2374502	[o] 23745 17.7	⊕ USA ⊕ J ⊕ AUS	Ate		2333403	[o] 23334 16.8	
	Bre	epad	2374581	[o] 23745 17.7	⊕ USA ⊕ J ⊕ AUS	Ate	epad	2333481	[o] 23334 16.8	
	Bre		2396001	[o] 23960 17.8	⊖ USA ⊖ J ⊖ AUS			98024701	L95	
	Bre	epad	2396081	[o] 23960 17.8	⊖ USA ⊖ J ⊖ AUS	Ate		82062900		
			98024701	L95	⊕ J ⊕ AUS ⊕ USA	Ate		82076400		
			98036401	L98	⊖ USA ⊖ J ⊖ AUS		PRO	92115503	ø 300 x 22 x 68	⊕ USA ⊕ AUS ⊕ sport pack. ⊕ AMG sport pack.
	Bre		82504000		⊖ USA ⊖ J ⊖ AUS		PRO	92115505	ø 300 x 22 x 68	⊕ USA ⊕ AUS ⊕ sport pack. ⊕ AMG sport pack.
	Bre		82504800		⊕ USA ⊕ J ⊕ AUS			91058800	ø 180 x 25	
		PRO	92119903	ø 330 x 32 x 64.5	⊕ USA ⊕ J ⊕ AUS			97035400		
		PRO	92119905	ø 330 x 32 x 64.5	⊕ USA ⊕ J ⊕ AUS					

		kW / hp										
E-CLASS (W211) 03/02→03/09												
E 500 (211.072)	04/06→12/08	398300 285 / 388		92120203	ø 330 x 32 x 64.5	⊕ USA ⊕ J ⊕ AUS ⊕ sport pack. ⊕ AMG sport pack.					
E 500 4-matic (211.083)	10/03→12/08	398400 225 / 306	Ate	2148401	[o] 21484 20.8	→X197477 →2005-10-24	Ate	2333403	[o] 23334 16.8		
			Ate	2392201	[o] 23922 21	X 197478→ 2005-10-24→	Ate	2333481	[o] 23334 16.8		
			Ate	2392281	[o] 23922 21	X 197478→ 2005-10-24→		98024701	L95		
				98040100	L95	right	Ate	82062900			
				98047200	L101	left	Ate	82076400			
			Ate	82059200				92115503	ø 300 x 22 x 68		
				92124100	ø 330 x 32 x 47.5	⊕ sport pack. ⊕ AMG sport pack.		92115505	ø 300 x 22 x 68		
				TPM0002				TPM0002			
								91058800	ø 180 x 25		
								97035400			
E 500 4-matic (211.090)	04/06→12/08	398500 285 / 388	Ate	2392201	[o] 23922 21		Ate	2333403	[o] 23334 16.8		
			Ate	2392281	[o] 23922 21		Ate	2333481	[o] 23334 16.8		
				98024701	L95	⊕ J ⊕ AUS		98024701	L95		
				98040100	L95	⊖ J ⊖ AUS	Ate	82062900			
			Ate	82059200			Ate	82076400			
				92124100	ø 330 x 32 x 47.5	⊕ sport pack. ⊕ AMG sport pack.		92115503	ø 300 x 22 x 68		
				TPM0002				92115505	ø 300 x 22 x 68		
								TPM0002			
								91058800	ø 180 x 25		
								97035400			
E 55 AMG Kompressor (211.076)	10/02→12/08	398600 350 / 476	Bre	2394301	[o] 23943 17.5		Bre	2347801	[o] 23478 16.5		
				98024701	L95	right		98024701	L95		
				98029400		left		92120000	ø 330 x 26 x 68.3		
				92120303	ø 360 x 36 x 64.5			91058800	ø 180 x 25		
				92120305	ø 360 x 36 x 64.5			97035400			
E 63 AMG (211.077, 211.177)	03/06→12/08	398700 378 / 514		98036401	L98		Bre	2447301	[–] 24473 14.8		
				TPM0002				98036401	L98		
								92120000	ø 330 x 26 x 68.3		
								TPM0002			
								91058800	ø 180 x 25		
								97035400			
E-CLASS (W212) 01/09→												
E 200 (212.034)	01/13→	398800 135 / 184	Luc	2430603	[o] 24306 20.6	⊖ AMG sport pack. ⊖ sport pack.	Ate	2333403	[o] 23334 16.8		
			Luc	2431001	[o] 24310 19.4	⊕ AMG sport pack. ⊕ sport pack.	Ate	2333481	[o] 23334 16.8		
			Luc	2431081	[o] 24310 19.4	⊕ AMG sport pack. ⊕ sport pack.		98024701	L95		
				98024701	L95		Ate	82518400			
			Luc	82518300				92115403	ø 300 x 10 x 68.5		
				92163203	ø 295 x 28 x 64.5	⊖ AMG sport pack. ⊖ sport pack.		92115405	ø 300 x 10 x 68.5		
				92163403	ø 322 x 32 x 64.5	⊕ AMG sport pack. ⊕ sport pack.		TPM0002			

kW / hp

E-CLASS (W212) 01/09→

E 200 (212.034)	01/13→	398800 135 / 184			TPM0002					91069100	ø 180 x 25	
E 200 CDI / BlueTEC (212.005, 212.006)	01/09→	398900 100 / 136	Luc		2430601	[o] 24306 20.6	⊖ AMG sport pack. ⊖ sport pack. ⊕ police veh.	Ate		2333403	[o] 23334 16.8	
			Luc	epad	2430603	[o] 24306 20.6	⊖ AMG sport pack. ⊖ sport pack.	Ate	epad	2333481	[o] 23334 16.8	
			Luc	epad	2430681	[o] 24306 20.6	⊖ AMG sport pack. ⊖ sport pack. ⊕ police veh.			98024701	L95	
			Luc		2431001	[o] 24310 19.4	⊕ sport pack. ⊕ AMG sport pack.	Ate		82062900		
			Luc	epad	2431081	[o] 24310 19.4	⊕ sport pack. ⊕ AMG sport pack.	Ate		82518400		
					98024701	L95			PRO	92115403	ø 300 x 10 x 68.5	
			Luc		82073300		⊖ AMG sport pack. ⊖ sport pack.		PRO	92115405	ø 300 x 10 x 68.5	
				PRO	92163203	ø 295 x 28 x 64.5	⊖ AMG sport pack. ⊖ sport pack.			TPM0002		
				PRO	92163403	ø 322 x 32 x 64.5	⊕ sport pack. ⊕ AMG sport pack.			91069100	ø 180 x 25	
					TPM0002							
E 200 CGI (212.048, 212.148)	08/09→	399000 135 / 184	Luc		2430603	[o] 24306 20.6	⊖ sport pack. ⊖ AMG sport pack.	Ate		2333403	[o] 23334 16.8	
			Luc		2431001	[o] 24310 19.4	⊕ sport pack. ⊕ AMG sport pack.	Ate	epad	2333481	[o] 23334 16.8	
			Luc	epad	2431081	[o] 24310 19.4	⊕ sport pack. ⊕ AMG sport pack.			98024701	L95	
					98024701	L95		Ate		82062900		
				PRO	92163203	ø 295 x 28 x 64.5	⊖ sport pack. ⊖ AMG sport pack.	Ate		82518400		
				PRO	92163403	ø 322 x 32 x 64.5	⊕ sport pack. ⊕ AMG sport pack.		PRO	92115503	ø 300 x 22 x 68	
					TPM0002				PRO	92115505	ø 300 x 22 x 68	
										TPM0002		
										91069100	ø 180 x 25	
E 200 NGT (212.035)	07/13→	399100 115 / 156	Luc		2430603	[o] 24306 20.6	⊖ AMG sport pack. ⊖ sport pack.	Ate		2333403	[o] 23334 16.8	
			Luc		2431001	[o] 24310 19.4	⊕ sport pack. ⊕ AMG sport pack.	Ate	epad	2333481	[o] 23334 16.8	
			Luc	epad	2431081	[o] 24310 19.4	⊕ sport pack. ⊕ AMG sport pack.			98024701	L95	
					98024701	L95		Ate		82518400		
			Luc		82518300				PRO	92115503	ø 300 x 22 x 68	
				PRO	92163203	ø 295 x 28 x 64.5	⊖ AMG sport pack. ⊖ sport pack.		PRO	92115505	ø 300 x 22 x 68	
				PRO	92163403	ø 322 x 32 x 64.5	⊕ sport pack. ⊕ AMG sport pack.			TPM0002		
					TPM0002					91069100	ø 180 x 25	
E 200 NGT (212.041)	03/11→	399200 120 / 163	Luc		2430601	[o] 24306 20.6	⊖ sport pack. ⊖ AMG sport pack.	Ate		2425301	[o] 24253 17.9	
			Luc		2430603	[o] 24306 20.6	⊕ sport pack. ⊕ AMG sport pack.	Ate	epad	2425381	[o] 24253 17.9	
			Luc	epad	2430681	[o] 24306 20.6	⊖ sport pack. ⊖ AMG sport pack.			98024701	L95	
					98024701	L95		Ate		82062900		
			Luc		82073300		⊕ sport pack. ⊕ AMG sport pack.	Ate		82503500		
				PRO	92163203	ø 295 x 28 x 64.5	⊖ sport pack. ⊖ AMG sport pack.		PRO	92163303	ø 300 x 10 x 57.5	
					TPM0002					TPM0002		
										91066900	ø 164 x 25	
										97038300		
E 220 BlueTEC (212.001)	05/14→	399300 130 / 177	Luc		2430601	[o] 24306 20.6	⊖ AMG sport pack. ⊖ sport pack. ⊕ taxi	Ate		2333403	[o] 23334 16.8	
			Luc		2430603	[o] 24306 20.6	⊖ AMG sport pack. ⊖ sport pack. ⊖ taxi	Ate	epad	2333481	[o] 23334 16.8	
			Luc	epad	2430681	[o] 24306 20.6	⊖ AMG sport pack. ⊖ sport pack. ⊕ taxi			98024701	L95	

		kW / hp											
E-CLASS (W212) 01/09→													
399300			Luc	2431001	[o] 24310 19.4	⊕ AMG sport pack. ⊕ sport pack.	Ate	82518400		
E 220 BlueTEC (212.001)	05/14→	130 / 177	Luc epad	2431081	[o] 24310 19.4	⊕ AMG sport pack. ⊕ sport pack.		TPM0002		
				98024701	L95			91069100	ø 180 x 25	
			Luc	82518300		⊕ AMG sport pack. ⊕ sport pack.				
			PRO	92163203	ø 295 x 28 x 64.5	⊖ AMG sport pack. ⊖ sport pack.				
			PRO	92163403	ø 322 x 32 x 64.5	⊕ AMG sport pack. ⊕ sport pack.				
				TPM0002						
399400			Luc	2430603	[o] 24306 20.6	⊖ sport pack. ⊖ AMG sport pack.	Ate	2333403	[o] 23334 16.8	
E 220 CDI	01/09→	120 / 163								
E 220 CDI / BlueTEC	01/09→	125 / 170	Luc	2431001	[o] 24310 19.4	⊕ sport pack. ⊕ AMG sport pack.	Ate	2333481	[o] 23334 16.8	
(212.001, 212.002)			Luc epad	2431081	[o] 24310 19.4	⊕ sport pack. ⊕ AMG sport pack.		98024701	L95	
				98024701	L95		Ate	82062900		
			Luc	82073300		⊖ sport pack. ⊖ AMG sport pack.	Ate	82518400		
			PRO	92163203	ø 295 x 28 x 64.5	⊖ sport pack. ⊖ AMG sport pack.	PRO	92115403	ø 300 x 10 x 68.5	
			PRO	92163403	ø 322 x 32 x 64.5	⊕ sport pack. ⊕ AMG sport pack.	PRO	92115405	ø 300 x 10 x 68.5	
				TPM0002				TPM0002		
								91069100	ø 180 x 25	
399500			Luc	2431001	[o] 24310 19.4		Ate	2333403	[o] 23334 16.8	
E 250 (212.036)	01/13→	155 / 211								
E 400 Hybrid	09/12→	245 / 333	Luc epad	2431081	[o] 24310 19.4		Ate	2333481	[o] 23334 16.8	
				98024701	L95			98024701	L95	
			Luc	82518300			Ate	82518400		
				92163500	ø 322 x 32 x 64.5	⊖ AMG sport pack. ⊖ sport pack.	PRO	92115503	ø 300 x 22 x 68	
			PRO	92163503	ø 322 x 32 x 64.5	⊖ AMG sport pack. ⊖ sport pack.	PRO	92115505	ø 300 x 22 x 68	
			PRO	92163403	ø 322 x 32 x 64.5	⊕ AMG sport pack. ⊕ sport pack.		TPM0002		
				TPM0002				91069100	ø 180 x 25	
399600			Luc	2430603	[o] 24306 20.6	⊕ Load Stage Design	Ate	2333403	[o] 23334 16.8	
E 250 CDI	07/14→	145 / 197	Luc	2431001	[o] 24310 19.4	⊕ Sport Brake Retrofit	Ate	2333481	[o] 23334 16.8	
			Luc epad	2431081	[o] 24310 19.4	⊕ Sport Brake Retrofit		98024701	L95	
				98024701	L95		Ate	82518400		
			Luc	82518300			PRO	92115503	ø 300 x 22 x 68	⊕ Load Stage Design
				92163500	ø 322 x 32 x 64.5	⊖ Load Stage Design ⊕ USA	PRO	92115505	ø 300 x 22 x 68	⊕ Load Stage Design
			PRO	92163203	ø 295 x 28 x 64.5	⊕ Load Stage Design		TPM0002		
			PRO	92163503	ø 322 x 32 x 64.5	⊖ Load Stage Design ⊕ USA		91069100	ø 180 x 25	
			PRO	92163403	ø 322 x 32 x 64.5	⊕ Sport Brake Retrofit				
				TPM0002						
399700			Luc	2430603	[o] 24306 20.6	→A001272 ⊖ sport pack. ⊖ AMG sport pack.	Ate	2333403	[o] 23334 16.8	
E 250 CDI / BlueTEC	01/09→	150 / 204	Luc	2431001	[o] 24310 19.4	A001273→ ⊖ sport pack. ⊖ AMG sport pack. ⊕ sport pack. ⊕ AMG sport pack.	Ate	2333481	[o] 23334 16.8	
(212.003, 212.004)			Luc epad	2431081	[o] 24310 19.4	A001273→ ⊖ sport pack. ⊖ AMG sport pack. ⊕ sport pack. ⊕ AMG sport pack.		98024701	L95	
				98024701	L95		Ate	82062900		
			Luc	82073300		→A001272 ⊖ sport pack. ⊖ AMG sport pack.	Ate	82518400		
							PRO	92115403	ø 300 x 10 x 68.5	A001273→

		kW / hp										
E-CLASS (W212) 01/09→												
399700												
E 250 CDI / BlueTEC (212.003, 212.004)	01/09→	150 / 204		92163500	ø 322 x 32 x 64.5	A001273→ ⊖ sport pack. ⊖ AMG sport pack.		PRO	92115405	ø 300 x 10 x 68.5	A001273→	
				PRO 92163203	ø 295 x 28 x 64.5	→A001272 ⊖ sport pack. ⊖ AMG sport pack.		PRO	92115503	ø 300 x 22 x 68	→A001272	
				PRO 92163503	ø 322 x 32 x 64.5	A001273→ ⊖ sport pack. ⊖ AMG sport pack.		PRO	92115505	ø 300 x 22 x 68	→A001272	
				PRO 92163403	ø 322 x 32 x 64.5	⊕ sport pack. ⊕ AMG sport pack.			TPM0002			
				TPM0002					91069100	ø 180 x 25		
399800			Luc	2431001	[o] 24310 19.4		Ate		2333403	[o] 23334 16.8		
E 250 CDI / BlueTEC 4-matic (212.082, 212.097)	01/09→	150 / 204	Luc	epad 2431081	[o] 24310 19.4		Ate	epad	2333481	[o] 23334 16.8		
				98024701	L95				98024701	L95		
				92163500	ø 322 x 32 x 64.5	⊖ AMG sport pack.	Ate		82062900			
				PRO 92163503	ø 322 x 32 x 64.5	⊖ AMG sport pack.	Ate		82518400			
				PRO 92163403	ø 322 x 32 x 64.5	⊕ AMG sport pack.		PRO	92115403	ø 300 x 10 x 68.5		
				TPM0002				PRO	92115405	ø 300 x 10 x 68.5		
									TPM0002			
									91069100	ø 180 x 25		
399900			Luc	2431001	[o] 24310 19.4		Ate		2333403	[o] 23334 16.8		
E 250 CGI (212.047, 212.147)	01/09→	150 / 204	Luc	epad 2431081	[o] 24310 19.4		Ate	epad	2333481	[o] 23334 16.8		
				98024701	L95				98024701	L95		
				92163500	ø 322 x 32 x 64.5	⊖ sport pack. ⊖ AMG sport pack.	Ate		82062900			
				PRO 92163503	ø 322 x 32 x 64.5	⊖ sport pack. ⊖ AMG sport pack.	Ate		82518400			
				PRO 92163403	ø 322 x 32 x 64.5	⊕ sport pack. ⊕ AMG sport pack.			TPM0002			
				TPM0002					91069100	ø 180 x 25		
400000			Luc	2431001	[o] 24310 19.4		Ate		2333403	[o] 23334 16.8		
E 300 (212.054)	01/09→	170 / 231										
E 300 CDI / BlueTEC (212.020, 212.021)	03/11→	170 / 231	Luc	epad 2431081	[o] 24310 19.4		Ate	epad	2333481	[o] 23334 16.8		
E 350 CDI (212.023)	03/11→	195 / 265		98024701	L95				98024701	L95		
				92163500	ø 322 x 32 x 64.5	⊖ AMG sport pack.	Ate		82062900			
				PRO 92163503	ø 322 x 32 x 64.5	⊖ AMG sport pack.	Ate		82518400			
				PRO 92163403	ø 322 x 32 x 64.5	⊕ AMG sport pack.		PRO	92115503	ø 300 x 22 x 68		
				TPM0002				PRO	92115505	ø 300 x 22 x 68		
									TPM0002			
									91069100	ø 180 x 25		
400100			Luc	2431001	[o] 24310 19.4		Ate		2333403	[o] 23334 16.8		
E 300 (212.055)	07/11→	185 / 252										
E 300 4-matic (212.080)	07/11→	185 / 252										
E 300 CDI (212.020)	03/11→	150 / 204	Luc	epad 2431081	[o] 24310 19.4		Ate	epad	2333481	[o] 23334 16.8		
E 350 4-matic (212.087)	01/09→08/11	200 / 272										
E 350 BlueTEC (212.024)	01/09→	155 / 211		98024701	L95				98024701	L95		
E 350 CDI	09/10→	157 / 214										
E 350 CDI (212.025)	01/09→	170 / 231	Luc	82518300			Ate		82062900			
E 350 CDI 4-matic (212.089)	09/09→	170 / 231										
E 350 CDI 4-matic (212.093)	03/11→	195 / 265										
E 350 CGI (212.057)	01/09→08/11	215 / 292		92163500	ø 322 x 32 x 64.5	⊖ AMG sport pack. ⊖ sport pack.	Ate		82518400			
				PRO 92163503	ø 322 x 32 x 64.5	⊖ AMG sport pack. ⊖ sport pack.		PRO	92115503	ø 300 x 22 x 68		
				PRO 92163403	ø 322 x 32 x 64.5	⊕ AMG sport pack. ⊕ sport pack.		PRO	92115505	ø 300 x 22 x 68		
				TPM0002					TPM0002			
									91069100	ø 180 x 25		
400200			Luc	2431001	[o] 24310 19.4		Ate		2333403	[o] 23334 16.8		
E 300 Hybrid / BlueTEC Hybrid (212.098)	12/11→	150 / 204										

		kW / hp												
E-CLASS (W212) 01/09→														
E 350 (212.056)	01/09→	200 / 272	Luc	epad	2431081	[o] 24310 19.4			Ate	epad	2333481	[o] 23334 16.8	
					98024701	L95					98024701	L95	
			Luc		82518300				Ate		82062900		
					92163500	ø 322 x 32 x 64.5	⊖ AMG perf. pack. ⊖ sport pack.		Ate		82518400		
				PRO	92163503	ø 322 x 32 x 64.5	⊖ AMG perf. pack. ⊖ sport pack.			PRO	92115503	ø 300 x 22 x 68	
				PRO	92163403	ø 322 x 32 x 64.5	⊕ AMG perf. pack. ⊕ sport pack.			PRO	92115505	ø 300 x 22 x 68	
					TPM0002						TPM0002		
											91069100	ø 180 x 25	
		400300	Luc		2431001	[o] 24310 19.4			Ate		2333403	[o] 23334 16.8	
E 350 (212.059)	09/11→	225 / 306											
E 350 4-matic (212.088)	09/11→	225 / 306	Luc	epad	2431081	[o] 24310 19.4			Ate	epad	2333481	[o] 23334 16.8	
					98024701	L95					98024701	L95	
			Luc		82518300				Ate		82062900		
					92163500	ø 322 x 32 x 64.5	⊖ AMG sport pack. ⊖ sport pack.		Ate		82518400		
				PRO	92163503	ø 322 x 32 x 64.5	⊖ AMG sport pack. ⊖ sport pack.			PRO	92115503	ø 300 x 22 x 68	
				PRO	92163403	ø 322 x 32 x 64.5	⊕ AMG sport pack. ⊕ sport pack.				TPM0002		
					TPM0002						91069100	ø 180 x 25	
		400400	Luc		2431001	[o] 24310 19.4			Ate		2333403	[o] 23334 16.8	
E 350 BlueTEC	11/12→	185 / 252	Luc	epad	2431081	[o] 24310 19.4			Ate	epad	2333481	[o] 23334 16.8	
			Bre		2497601	[o] 24976 17.5	⊕ CDN ⊕ sport pack. ⊕ AMG sport pack.				98024701	L95	
					98024701	L95			Ate		82518400		⊕ USA
			Bre		82504000					PRO	92115503	ø 300 x 22 x 68	
			Luc		82518300		⊕ sport pack. ⊕ AMG sport pack.			PRO	92115505	ø 300 x 22 x 68	
					92163500	ø 322 x 32 x 64.5					TPM0002		
				PRO	92163503	ø 322 x 32 x 64.5					91069100	ø 180 x 25	
				PRO	92163403	ø 322 x 32 x 64.5	⊕ sport pack. ⊕ AMG sport pack.						
					TPM0002								
		400500	Luc		2431001	[o] 24310 19.4	⊖ arm.veh.		Ate		2333403	[o] 23334 16.8	
E 350 BlueTEC (212.026)	05/14→	190 / 258	Luc	epad	2431081	[o] 24310 19.4	⊖ arm.veh.		Ate	epad	2333481	[o] 23334 16.8	
					98024701	L95			Bre		2497601	[o] 24976 17.5	⊕ arm.veh. ⊕ arm.veh. class B4
			Bre		82504000		⊕ arm.veh. ⊕ arm.veh. class B4				98024701	L95	
			Luc		82518300		⊖ arm.veh.		Ate		82518400		
					92163500	ø 322 x 32 x 64.5	⊖ AMG sport pack. ⊖ sport pack.			PRO	92115503	ø 300 x 22 x 68	
				PRO	92163503	ø 322 x 32 x 64.5	⊖ AMG sport pack. ⊖ sport pack.			PRO	92115505	ø 300 x 22 x 68	
				PRO	92163403	ø 322 x 32 x 64.5	⊕ AMG sport pack. ⊕ sport pack. ⊕ Sport Brake Retrofit				TPM0002		
					TPM0002						91069100	ø 180 x 25	
		400600	Luc		2431001	[o] 24310 19.4	⊕ sport pack. ⊕ AMG sport pack.		Ate		2333403	[o] 23334 16.8	
E 350 BlueTEC 4-matic (212.094, 212.294)	11/12→	185 / 252	Luc	epad	2431081	[o] 24310 19.4	⊕ sport pack. ⊕ AMG sport pack.		Ate	epad	2333481	[o] 23334 16.8	
			Bre		2497601	[o] 24976 17.5	⊕ reinf.brake				98024701	L95	
					98024701	L95			Ate		82518400		⊕ USA
			Bre		82504000		⊕ reinf.brake			PRO	92115503	ø 300 x 22 x 68	

kW / hp

E-CLASS (W212) 01/09→

400600														
E 350 BlueTEC 4-matic (212.094, 212.294)	11/12→	185 / 252	Luc		82518300		⊕ sport pack. ⊕ AMG sport pack.			92115505	ø 300 x 22 x 68	
					92163500	ø 322 x 32 x 64.5				TPM0002		
					92163503	ø 322 x 32 x 64.5				91069100	ø 180 x 25	
					92163403	ø 322 x 32 x 64.5	⊕ sport pack. ⊕ AMG sport pack.					
					TPM0002							
400700														
E 350 BlueTEC 4-matic (212.094)	05/14→	190 / 258	Luc		2431001	[o] 24310 19.4			Ate		2333403	[o] 23334 16.8	
			Luc		2431081	[o] 24310 19.4			Ate		2333481	[o] 23334 16.8	
					98024701	L95					98024701	L95	
			Bre		82504000		⊕ AMG sport pack. ⊕ sport pack. on. avail. in set		Ate		82518400		
			Luc		82518300						92115503	ø 300 x 22 x 68	
					92163500	ø 322 x 32 x 64.5	⊖ AMG sport pack. ⊖ sport pack.				92115505	ø 300 x 22 x 68	
					92163503	ø 322 x 32 x 64.5	⊖ AMG sport pack. ⊖ sport pack.				TPM0002		
					92163403	ø 322 x 32 x 64.5	⊕ AMG sport pack. ⊕ sport pack. ⊕ Sport Brake Retrofit					
					TPM0002							
400800														
E 400 (212.061)	07/14→	245 / 333	Bre		2497601	[o] 24976 17.5	⊕ AMG sport pack. ⊕ sport pack.		Ate		2333403	[o] 23334 16.8	
					98024701	L95			Ate		2333481	[o] 23334 16.8	
			Bre		82504000						98024701	L95	
					TPM0002				Ate		82518400		
											92115503	ø 300 x 22 x 68	
											92115505	ø 300 x 22 x 68	
											TPM0002		
											91069100	ø 180 x 25	
400900														
E 400 (212.065)	01/13→	245 / 333	Bre		2497601	[o] 24976 17.5	⊕ AMG sport pack. ⊕ sport pack.		Ate		2333403	[o] 23334 16.8	⊕ USA
E 400 4-matic (212.067)	01/13→	245 / 333			98024701	L95			Ate		2333481	[o] 23334 16.8	⊕ USA
			Bre		82504000						98024701	L95	
					TPM0002				Ate		82518400		⊕ USA
											92115503	ø 300 x 22 x 68	
											92115505	ø 300 x 22 x 68	
											TPM0002		
											91069100	ø 180 x 25	
401000														
E 400 4-matic (212.099)	07/14→	245 / 333	Luc		2431001	[o] 24310 19.4	⊕ AMG sport pack. ⊕ sport pack. ⊕ CDN		Ate		2333403	[o] 23334 16.8	
			Luc		2431081	[o] 24310 19.4	⊕ AMG sport pack. ⊕ sport pack. ⊕ CDN		Ate		2333481	[o] 23334 16.8	
			Bre		2497601	[o] 24976 17.5					98024701	L95	
					98024701	L95			Ate		82518400		
			Bre		82504000						92115503	ø 300 x 22 x 68	
			Luc		82518300		⊕ AMG sport pack. ⊕ sport pack. ⊕ CDN				92115505	ø 300 x 22 x 68	
					92163403	ø 322 x 32 x 64.5	⊕ AMG sport pack. ⊕ sport pack. ⊕ CDN				TPM0002		
					TPM0002						91069100	ø 180 x 25	
401100														
E 500 (212.072)	01/09→	285 / 388	Bre		2497601	[o] 24976 17.5			Ate		2333403	[o] 23334 16.8	
					98024701	L95			Ate		2333481	[o] 23334 16.8	

		kW / hp											
E-CLASS (W212) 01/09→													
		401100		PRO	92176403	ø 350 x 32 x 64.5	⊕ sport pack. ⊕ AMG sport pack.			98024701	L95	
E 500 (212.072)	01/09→	285 / 388			TPM0002			Ate		82062900		
								Ate		82518400		
										TPM0002		
										91069100	ø 180 x 25	
		401200	Bre		2521901	[o] 25219 17.8	⊖ USA	Ate		2333403	[o] 23334 16.8	
E 500 (212.073)	09/11→	300 / 408										
E 500 4-matic (212.091)	09/11→	300 / 408	Bre		2521902	[o] 25219 17.8	⊕ USA	Ate		2333481	[o] 23334 16.8	
					98024701	L95				98024701	L95	
					TPM0002			Ate		82062900		
								Ate		82518400		
										TPM0002		
										91069100	ø 180 x 25	
		401300	Bre		2497601	[o] 24976 17.5		Ate		2333403	[o] 23334 16.8	
E 500 4-matic (212.090)	01/09→	285 / 388			98024701	L95		Ate		2333481	[o] 23334 16.8	
E 550	09/10→12/11	300 / 408	Bre		82504000					98024701	L95	
					TPM0002			Ate		82062900		
								Ate		82518400		
										TPM0002		
										91069100	ø 180 x 25	
		401400			98036401	L98		Bre		2473301	[o] 24733 15.3	
E 63 AMG	01/09→12/11	336 / 457										
E 63 AMG (212.075)	02/13→	430 / 585			TPM0002					98036401	L98	
										TPM0002		
										91069100	ø 180 x 25	
		401500			98036401	L98		Bre		2473301	[o] 24733 15.3	⊖ ceramic brake
E 63 AMG (212.074)	02/11→	386 / 525										
E 63 AMG (212.074)	02/11→	410 / 558										
E 63 AMG (212.077)	12/09→	386 / 525			TPM0002					98036401	L98	
E 63 AMG (212.077)	05/11→	410 / 558										
E 63 AMG 4-matic (212.076)	02/13→	430 / 585								TPM0002		
										91069100	ø 180 x 25	
		401600			98036401	L98		Bre		2473301	[o] 24733 15.3	
E 63 AMG 4-matic (212.092)	02/11→	410 / 558			TPM0002					98036401	L98	
								Luc		82518900		⊕ ceramic brake
										TPM0002		
										91069100	ø 180 x 25	
E-CLASS Break (S210) 06/96→03/03 → E-CLASS Estate (S210), Page 641													
E-CLASS Cabriolet (A207) 01/10→ → E-CLASS Convertible (A207), Page 633													
E-CLASS Convertible (A207) 01/10→													
		401700	Luc		2430601	[o] 24306 20.6	⊖ AMG sport pack. ⊖ sport pack.	Ate		2425301	[o] 24253 17.9	
E 200 (207.434)	03/13→	135 / 184										
E 220 CDI (207.402)	02/10→	120 / 163	Luc	epad	2430681	[o] 24306 20.6	⊖ AMG sport pack. ⊖ sport pack.	Ate	epad	2425381	[o] 24253 17.9	
			Luc		2431001	[o] 24310 19.4	⊕ AMG sport pack. ⊕ sport pack.			98024701	L95	
			Luc	epad	2431081	[o] 24310 19.4	⊕ AMG sport pack. ⊕ sport pack.	Ate		82062900		
					98024701	L95		Ate		82503500		
			Luc		82518300		⊕ AMG sport pack. ⊕ sport pack.		PRO	92163303	ø 300 x 10 x 57.5	

I - M

		kW / hp										
E-CLASS Convertible (A207) 01/10→												
		401700		92163203	ø 295 x 28 x 64.5	⊖ AMG sport pack. ⊖ sport pack.		TPM0002				
E 200 (207.434)	03/13→	135 / 184		92163403	ø 322 x 32 x 64.5	⊕ AMG sport pack. ⊕ sport pack.		91066900	ø 164 x 25			
E 220 CDI (207.402)	02/10→	120 / 163		TPM0002				97038300				
		401800	Luc	2430601	[o] 24306 20.6	⊖ AMG sport pack. ⊖ sport pack.	Ate	2425301	[o] 24253 17.9			
			Luc	2430681	[o] 24306 20.6	⊖ AMG sport pack. ⊖ sport pack.	Ate	2425381	[o] 24253 17.9			
E 200 CGI (207.448)	01/10→	135 / 184	Luc	2431001	[o] 24310 19.4	⊕ AMG sport pack. ⊕ sport pack.		98024701	L95			
			Luc	2431081	[o] 24310 19.4	⊕ AMG sport pack. ⊕ sport pack.	Ate	82062900				
				98024701	L95		Ate	82503500				
			Luc	82518300		⊕ sport pack. ⊕ AMG sport pack.		92163303	ø 300 x 10 x 57.5			
				92163203	ø 295 x 28 x 64.5	⊖ AMG sport pack. ⊖ sport pack.		TPM0002				
				92163403	ø 322 x 32 x 64.5	⊕ AMG sport pack. ⊕ sport pack.		91066900	ø 164 x 25			
				TPM0002				97038300				
		401900	Luc	2430601	[o] 24306 20.6	⊖ AMG sport pack. ⊖ sport pack.	Ate	2425301	[o] 24253 17.9			
			Luc	2430681	[o] 24306 20.6	⊖ AMG sport pack. ⊖ sport pack.	Ate	2425381	[o] 24253 17.9			
E 220 BlueTEC (207.401)	05/14→	130 / 177	Luc	2431001	[o] 24310 19.4	⊕ AMG sport pack. ⊕ sport pack.		98024701	L95			
			Luc	2431081	[o] 24310 19.4	⊕ AMG sport pack. ⊕ sport pack.	Ate	82062900				
				98024701	L95		Ate	82503500				
			Luc	82518300		⊕ AMG sport pack. ⊕ sport pack.		92163303	ø 300 x 10 x 57.5			
				92163203	ø 295 x 28 x 64.5	⊖ AMG sport pack. ⊖ sport pack.		TPM0002				
				92163403	ø 322 x 32 x 64.5	⊕ AMG sport pack. ⊕ sport pack.		91066900	ø 164 x 25			
				TPM0002								
		402000	Luc	2430601	[o] 24306 20.6	⊖ AMG sport pack. ⊖ sport pack.	Ate	2425301	[o] 24253 17.9			
			Luc	2430681	[o] 24306 20.6	⊖ AMG sport pack. ⊖ sport pack.	Ate	2425381	[o] 24253 17.9			
E 220 CDI / BlueTEC (207.402, 207.401)	01/10→	125 / 170	Luc	2431001	[o] 24310 19.4	⊕ AMG sport pack. ⊕ sport pack.		98024701	L95			
			Luc	2431081	[o] 24310 19.4	⊕ AMG sport pack. ⊕ sport pack.	Ate	82062900				
				98024701	L95			92163303	ø 300 x 10 x 57.5			
			Luc	82518300		⊕ AMG sport pack. ⊕ sport pack.		TPM0002				
				92163203	ø 295 x 28 x 64.5	⊖ AMG sport pack. ⊖ sport pack.		91066900	ø 164 x 25			
				92163403	ø 322 x 32 x 64.5	⊕ AMG sport pack. ⊕ sport pack.		97038300				
				TPM0002								
		402100	Luc	2431001	[o] 24310 19.4		Ate	2425301	[o] 24253 17.9			
			Luc	2431081	[o] 24310 19.4		Ate	2425381	[o] 24253 17.9			
E 250 (207.436)	06/13→	155 / 211		98024701	L95			98024701	L95			
			Luc	82518300		⊕ AMG sport pack. ⊕ sport pack.	Ate	82062900				
				92163503	ø 322 x 32 x 64.5	⊖ AMG sport pack. ⊖ sport pack.	Ate	82503500				
				92163403	ø 322 x 32 x 64.5	⊕ AMG sport pack. ⊕ sport pack.		92163303	ø 300 x 10 x 57.5			
				TPM0002				TPM0002				
								91066900	ø 164 x 25			
		402200	Luc	2431001	[o] 24310 19.4		Ate	2425301	[o] 24253 17.9			
E 250 CDI / BlueTEC (207.403, 207.404)	01/10→	150 / 204	Luc	2431081	[o] 24310 19.4		Ate	2425381	[o] 24253 17.9			

		kW / hp											
E-CLASS Convertible (A207) 01/10→													
E 250 CDI / BlueTEC (207.403, 207.404)	01/10→	402200 150 / 204		98024701	L95				98024701	L95	
			Luc	82518300		⊕ AMG sport pack. ⊕ sport pack.	Ate	82062900		
				92163500	ø 322 x 32 x 64.5	⊖ AMG sport pack. ⊖ sport pack.	Ate	82503500		
				92163503	ø 322 x 32 x 64.5	⊖ AMG sport pack. ⊖ sport pack.		92163303	ø 300 x 10 x 57.5	
				92163403	ø 322 x 32 x 64.5	⊕ AMG sport pack. ⊕ sport pack.		TPM0002		
				TPM0002				91066900	ø 164 x 25	
								97038300		
E 250 CGI (207.447)	01/10→	402300 150 / 204	Luc	2430601	[o] 24306 20.6	⊖ sport pack. ⊖ AMG sport pack.	Ate	2425301	[o] 24253 17.9	
			Luc epad	2430681	[o] 24306 20.6	⊖ sport pack. ⊖ AMG sport pack.	Ate epad	2425381	[o] 24253 17.9	
			Luc	2431001	[o] 24310 19.4	⊕ sport pack. ⊕ AMG sport pack.		98024701	L95	
			Luc epad	2431081	[o] 24310 19.4	⊕ sport pack. ⊕ AMG sport pack.	Ate	82062900		
				98024701	L95		Ate	82503500		
			Luc	82518300		⊕ sport pack. ⊕ AMG sport pack.		92163303	ø 300 x 10 x 57.5	
				92163203	ø 295 x 28 x 64.5	⊖ AMG sport pack. ⊖ sport pack.		TPM0002		
				92163403	ø 322 x 32 x 64.5	⊕ AMG sport pack. ⊕ sport pack.		91066900	ø 164 x 25	
				TPM0002				97038300		
E 300 (207.455)	04/11→	402400 185 / 252	Luc	2431001	[o] 24310 19.4		Ate	2425301	[o] 24253 17.9	
			Luc epad	2431081	[o] 24310 19.4		Ate epad	2425381	[o] 24253 17.9	
				98024701	L95			98024701	L95	
			Luc	82518300		⊖ sport pack. ⊖ AMG sport pack.	Ate	82062900		
				92163500	ø 322 x 32 x 64.5	⊖ AMG sport pack. ⊖ sport pack.	Ate	82503500		
				92163503	ø 322 x 32 x 64.5	⊖ AMG sport pack. ⊖ sport pack.		92163600	ø 300 x 22 x 57.1	
				92163403	ø 322 x 32 x 64.5	⊕ AMG sport pack. ⊕ sport pack.		92163603	ø 300 x 22 x 57.1	
				TPM0002				TPM0002		
E 320 (207.462)	07/14→	402500 200 / 272	Luc	2431001	[o] 24310 19.4		Ate	2425301	[o] 24253 17.9	
			Luc epad	2431081	[o] 24310 19.4		Ate epad	2425381	[o] 24253 17.9	
				98024701	L95			98024701	L95	
			Luc	82518300			Ate	82503500		
				92163403	ø 322 x 32 x 64.5	⊕ AMG sport pack.		TPM0002		
				TPM0002				91066900	ø 164 x 25	
E 350	05/11→	402600 200 / 272	Luc	2431001	[o] 24310 19.4		Ate	2425301	[o] 24253 17.9	alumin. call.
			Luc epad	2431081	[o] 24310 19.4		Ate epad	2425381	[o] 24253 17.9	alumin. call.
				98024701	L95		Ate	2425401	[o] 24254 17.9	cast iron call.
			Luc	82518300			Ate epad	2425481	[o] 24254 17.9	cast iron call.
				92163500	ø 322 x 32 x 64.5	⊖ sport pack. ⊖ AMG sport pack.		98024701	L95	
				92163503	ø 322 x 32 x 64.5	⊖ sport pack. ⊖ AMG sport pack.	Ate	82062900		
				92163403	ø 322 x 32 x 64.5	⊕ sport pack. ⊕ AMG sport pack.	Ate	82503500		
				TPM0002				92163600	ø 300 x 22 x 57.1	
								92163603	ø 300 x 22 x 57.1	
								TPM0002		

kW / hp

E-CLASS Convertible (A207) 01/10→

E 350	05/11→	402600 200 / 272										91066900	ø 164 x 25	
												97038300		
E 350 (207.459)	04/11→	402700 225 / 306	Luc		2431001	[o] 24310 19.4			Ate		2425301	[o] 24253 17.9	alumin. call.
E 350 CGI (207.457)	01/10→	215 / 292	Luc	epad	2431081	[o] 24310 19.4			Ate	epad	2425381	[o] 24253 17.9	alumin. call.
					98024701	L95			Ate		2425401	[o] 24254 17.9	cast iron call.
			Luc		82518300				Ate	epad	2425481	[o] 24254 17.9	cast iron call.
					92163500	ø 322 x 32 x 64.5	⊖ AMG sport pack. ⊖ sport pack.				98024701	L95	
				PRO	92163503	ø 322 x 32 x 64.5	⊖ AMG sport pack. ⊖ sport pack.		Ate		82062900		
				PRO	92163403	ø 322 x 32 x 64.5	⊕ AMG sport pack. ⊕ sport pack.		Ate		82503500		
					TPM0002						92163600	ø 300 x 22 x 57.1	
										PRO	92163603	ø 300 x 22 x 57.1	
											TPM0002		
											91066900	ø 164 x 25	
											97038300		
E 350 BlueTEC (207.426)	06/13→	402800 185 / 252	Luc		2431001	[o] 24310 19.4			Ate		2425301	[o] 24253 17.9	alumin. call.
			Luc	epad	2431081	[o] 24310 19.4			Ate	epad	2425381	[o] 24253 17.9	alumin. call.
					98024701	L95			Ate		2425401	[o] 24254 17.9	cast iron call.
			Luc		82518300				Ate	epad	2425481	[o] 24254 17.9	cast iron call.
					92163500	ø 322 x 32 x 64.5	⊖ AMG sport pack. ⊖ sport pack.				98024701	L95	
				PRO	92163503	ø 322 x 32 x 64.5	⊖ AMG sport pack. ⊖ sport pack.		Ate		82062900		
				PRO	92163403	ø 322 x 32 x 64.5	⊕ AMG sport pack. ⊕ sport pack.		Ate		82503500		
					TPM0002						TPM0002		
											91066900	ø 164 x 25	
											97038300		
E 350 BlueTEC (207.426)	05/14→	402900 190 / 258	Luc		2431001	[o] 24310 19.4			Ate		2425301	[o] 24253 17.9	
			Luc	epad	2431081	[o] 24310 19.4			Ate	epad	2425381	[o] 24253 17.9	
					98024701	L95					98024701	L95	
			Luc		82518300				Ate		82503500		
					92163500	ø 322 x 32 x 64.5	⊖ AMG sport pack. ⊖ sport pack.				TPM0002		
				PRO	92163503	ø 322 x 32 x 64.5	⊖ AMG sport pack. ⊖ sport pack.				91066900	ø 164 x 25	
				PRO	92163403	ø 322 x 32 x 64.5	⊕ AMG sport pack. ⊕ sport pack.						
					TPM0002								
E 350 CDI	04/11→	403000 195 / 265	Luc		2431001	[o] 24310 19.4			Ate		2425401	[o] 24254 17.9	
E 350 CDI (207.422)	01/10→	170 / 231	Luc	epad	2431081	[o] 24310 19.4			Ate	epad	2425481	[o] 24254 17.9	
					98024701	L95					98024701	L95	
			Luc		82518300				Ate		82062900		
					92163500	ø 322 x 32 x 64.5	⊖ AMG sport pack. ⊖ sport pack.		Ate		82503500		
				PRO	92163503	ø 322 x 32 x 64.5	⊖ AMG sport pack. ⊖ sport pack.				92163600	ø 300 x 22 x 57.1	
				PRO	92163403	ø 322 x 32 x 64.5	⊕ AMG sport pack. ⊕ sport pack.			PRO	92163603	ø 300 x 22 x 57.1	
					TPM0002						TPM0002		

→

kW / hp

E-CLASS Convertible (A207) 01/10→

403000														
E 350 CDI	04/11→	195 / 265										91066900	ø 164 x 25	
E 350 CDI (207.422)	01/10→	170 / 231										97038300		
403100			Luc		2431001	[o] 24310 19.4			Ate		2425301	[o] 24253 17.9		
E 400 (207.461)	07/14→	245 / 333	Luc	epad	2431081	[o] 24310 19.4			Ate	epad	2425381	[o] 24253 17.9		
					98024701	L95					98024701	L95		
			Luc		82518300				Ate		82503500			
					TPM0002						TPM0002			
											91066900	ø 164 x 25		
403200			Luc		2431001	[o] 24310 19.4			Ate		2425301	[o] 24253 17.9		
E 400 (207.465)	06/13→	245 / 333	Luc	epad	2431081	[o] 24310 19.4			Ate	epad	2425381	[o] 24253 17.9		
					98024701	L95					98024701	L95		
			Luc		82518300				Ate		82062900			
				PRO	92163403	ø 322 x 32 x 64.5			Ate		82503500			
					TPM0002						92163600	ø 300 x 22 x 57.1		
										PRO	92163603	ø 300 x 22 x 57.1		
											TPM0002			
403300			Luc		2431001	[o] 24310 19.4			Ate		2425401	[o] 24254 17.9		
E 500 (207.472)	01/10→	285 / 388	Luc	epad	2431081	[o] 24310 19.4			Ate	epad	2425481	[o] 24254 17.9		
					98024701	L95					98024701	L95		
			Luc		82518300				Ate		82062900			
				PRO	92224603	ø 344 x 32 x 64.6			Ate		82503500			
					TPM0002						92163600	ø 300 x 22 x 57.1		
										PRO	92163603	ø 300 x 22 x 57.1		
											TPM0002			
											91066900	ø 164 x 25		
											97038300			
403400			Luc		2431001	[o] 24310 19.4	⊖ USA		Ate		2425401	[o] 24254 17.9		
E 500 (207.473)	09/11→	300 / 408	Luc	epad	2431081	[o] 24310 19.4	⊖ USA		Ate	epad	2425481	[o] 24254 17.9		
			Ate		2515803	[o] 25158 19	⊕ USA				98024701	L95		
					98024701	L95			Ate		82062900			
			Luc		82518300				Ate		82503500			
				PRO	92224603	ø 344 x 32 x 64.6					92163600	ø 300 x 22 x 57.1		
					TPM0002					PRO	92163603	ø 300 x 22 x 57.1		
											TPM0002			
											91066900	ø 164 x 25		
											97038300			
403500			Ate		2515803	[o] 25158 19			Ate		2425301	[o] 24253 17.9		
E 550	09/11→	299 / 407			98024701	L95			Ate	epad	2425381	[o] 24253 17.9		
					TPM0002						98024701	L95		
									Ate		82503500			

I - M

		kW / hp											
E-CLASS Convertible (A207) 01/10→													
		403500											
E 550	09/11→	299 / 407								TPM0002			
										91066900	ø 164 x 25		
E-CLASS Coupe (C207) 01/09→													
		403600	Luc		2430601	[o] 24306 20.6	⊖ AMG sport pack. ⊖ sport pack.	Ate		2425301	[o] 24253 17.9		
E 200 (207.334)	06/13→	135 / 184	Luc	epad	2430681	[o] 24306 20.6	⊖ AMG sport pack. ⊖ sport pack.	Ate	epad	2425381	[o] 24253 17.9		
			Luc		2431001	[o] 24310 19.4	⊕ AMG sport pack. ⊕ sport pack.			98024701	L95		
			Luc	epad	2431081	[o] 24310 19.4	⊕ AMG sport pack. ⊕ sport pack.	Ate		82062900			
					98024701	L95		Ate		82503500			
			Luc		82518300				PRO	92163303	ø 300 x 10 x 57.5		
				PRO	92163203	ø 295 x 28 x 64.5	⊖ AMG sport pack. ⊖ sport pack.			TPM0002			
				PRO	92163403	ø 322 x 32 x 64.5	⊕ AMG sport pack. ⊕ sport pack.			91066900	ø 164 x 25		
					TPM0002					97038300			
		403700	Luc		2430601	[o] 24306 20.6	⊖ AMG sport pack. ⊖ sport pack.	Ate		2425301	[o] 24253 17.9		
E 200 CGI (207.348)	01/10→	135 / 184											
E 220 BlueTEC (207.301)	05/14→	130 / 177	Luc	epad	2430681	[o] 24306 20.6	⊖ AMG sport pack. ⊖ sport pack.	Ate	epad	2425381	[o] 24253 17.9		
E 220 CDI	07/14→	120 / 163	Luc		2431001	[o] 24310 19.4	⊕ AMG sport pack. ⊕ sport pack.			98024701	L95		
			Luc	epad	2431081	[o] 24310 19.4	⊕ AMG sport pack. ⊕ sport pack.	Ate		82062900			
					98024701	L95		Ate		82503500			
			Luc		82518300		⊕ AMG sport pack. ⊕ sport pack.		PRO	92163303	ø 300 x 10 x 57.5		
				PRO	92163203	ø 295 x 28 x 64.5	⊖ AMG sport pack. ⊖ sport pack.			TPM0002			
				PRO	92163403	ø 322 x 32 x 64.5	⊕ AMG sport pack. ⊕ sport pack.			91066900	ø 164 x 25		
					TPM0002					97038300			
		403800	Luc		2430601	[o] 24306 20.6	⊖ AMG sport pack. ⊖ sport pack.	Ate		2425301	[o] 24253 17.9		
E 220 CDI (207.302)	01/10→	125 / 170	Luc	epad	2430681	[o] 24306 20.6	⊖ AMG sport pack. ⊖ sport pack.	Ate	epad	2425381	[o] 24253 17.9		
			Luc		2431001	[o] 24310 19.4	⊕ AMG sport pack. ⊕ sport pack.			98024701	L95		
			Luc	epad	2431081	[o] 24310 19.4	⊕ AMG sport pack. ⊕ sport pack.	Ate		82062900			
					98024701	L95		Ate		82503500			
			Luc		82518300		⊕ AMG sport pack. ⊕ sport pack.		PRO	92163303	ø 300 x 10 x 57.5	⊖ AUS	
				PRO	92163203	ø 295 x 28 x 64.5	⊖ AMG sport pack. ⊖ sport pack.			TPM0002			
				PRO	92163403	ø 322 x 32 x 64.5	⊕ AMG sport pack. ⊕ sport pack.			91066900	ø 164 x 25		
					TPM0002					97038300			
		403900	Luc		2431001	[o] 24310 19.4		Ate		2425301	[o] 24253 17.9		
E 250 (207.336)	06/13→	155 / 211	Luc	epad	2431081	[o] 24310 19.4		Ate	epad	2425381	[o] 24253 17.9		
					98024701	L95				98024701	L95		
			Luc		82518300			Ate		82062900			
				PRO	92163203	ø 295 x 28 x 64.5	⊖ AMG sport pack. ⊖ sport pack.	Ate		82503500			
				PRO	92163403	ø 322 x 32 x 64.5	⊕ AMG sport pack. ⊕ sport pack.		PRO	92163303	ø 300 x 10 x 57.5		
					TPM0002					TPM0002			
										91066900	ø 164 x 25		
										97038300			
		404000	Luc		2431001	[o] 24310 19.4		Ate		2425301	[o] 24253 17.9		
E 250 CDI (207.303)	01/09→	150 / 204											

→

E-CLASS Coupe (C207) 01/09→

		kW / hp												
E 250 CDI (207.303)	01/09→	404000 150 / 204	Luc	epad	2431081	[o] 24310 19.4		Ate	epad	2425381	[o] 24253 17.9	
					98024701	L95				98024701	L95	
			Luc		82518300			Ate		82062900		
					92163500	ø 322 x 32 x 64.5	⊖ AMG sport pack. ⊖ sport pack.	Ate		82503500		
				PRO	92163503	ø 322 x 32 x 64.5	⊖ AMG sport pack. ⊖ sport pack.		PRO	92163303	ø 300 x 10 x 57.5	
				PRO	92163403	ø 322 x 32 x 64.5	⊕ AMG sport pack. ⊕ sport pack.			TPM0002		
					TPM0002					91066900	ø 164 x 25	
										97038300		
E 250 CGI (207.347)	01/09→	404100 150 / 204	Luc		2430601	[o] 24306 20.6	⊖ AMG sport pack. ⊖ sport pack.	Ate		2425301	[o] 24253 17.9	
			Luc	epad	2430681	[o] 24306 20.6	⊖ AMG sport pack. ⊖ sport pack.	Ate	epad	2425381	[o] 24253 17.9	
			Luc		2431001	[o] 24310 19.4	⊕ AMG sport pack. ⊕ sport pack.			98024701	L95	
			Luc	epad	2431081	[o] 24310 19.4	⊕ AMG sport pack. ⊕ sport pack.	Ate		82062900		
					98024701	L95		Ate		82503500		
			Luc		82518300		⊕ AMG sport pack. ⊕ sport pack.		PRO	92163303	ø 300 x 10 x 57.5	
				PRO	92163203	ø 295 x 28 x 64.5	⊖ sport pack. ⊖ AMG sport pack.			TPM0002		
				PRO	92163403	ø 322 x 32 x 64.5	⊕ sport pack. ⊕ AMG sport pack.			91066900	ø 164 x 25	
					TPM0002					97038300		
E 300	04/11→	404200 185 / 252	Luc		2431001	[o] 24310 19.4		Ate		2425301	[o] 24253 17.9	
			Luc	epad	2431081	[o] 24310 19.4		Ate	epad	2425381	[o] 24253 17.9	
					98024701	L95				98024701	L95	
			Luc		82518300			Ate		82062900		
					92163500	ø 322 x 32 x 64.5	⊖ AMG sport pack. ⊖ sport pack.	Ate		82503500		
				PRO	92163503	ø 322 x 32 x 64.5	⊖ AMG sport pack. ⊖ sport pack.			92163600	ø 300 x 22 x 57.1	
				PRO	92163403	ø 322 x 32 x 64.5	⊕ AMG sport pack. ⊕ sport pack.		PRO	92163603	ø 300 x 22 x 57.1	
					TPM0002					TPM0002		
										91066900	ø 164 x 25	
										97038300		
E 320 (207.362)	07/14→	404300 200 / 272	Luc		2431001	[o] 24310 19.4		Ate		2425301	[o] 24253 17.9	
			Luc	epad	2431081	[o] 24310 19.4		Ate	epad	2425381	[o] 24253 17.9	
					98024701	L95				98024701	L95	
			Luc		82518300			Ate		82503500		
				PRO	92163403	ø 322 x 32 x 64.5	⊕ sport pack. ⊕ AMG sport pack.			TPM0002		
					TPM0002					91066900	ø 164 x 25	
E 350 (207.356)	04/11→	404400 225 / 306	Luc		2431001	[o] 24310 19.4		Ate		2425301	[o] 24253 17.9	alumin. call.
E 350 (207.356)	05/11→	200 / 272	Luc	epad	2431081	[o] 24310 19.4		Ate	epad	2425381	[o] 24253 17.9	alumin. call.
E 350 CGI (207.357)	01/09→	215 / 292			98024701	L95		Ate		2425401	[o] 24254 17.9	cast iron call.
			Luc		82518300			Ate	epad	2425481	[o] 24254 17.9	cast iron call.
					92163500	ø 322 x 32 x 64.5	⊖ AMG sport pack. ⊖ sport pack.			98024701	L95	
				PRO	92163503	ø 322 x 32 x 64.5	⊖ AMG sport pack. ⊖ sport pack.	Ate		82062900		
				PRO	92163403	ø 322 x 32 x 64.5	⊕ AMG sport pack. ⊕ sport pack.	Ate		82503500		

kW / hp

E-CLASS Coupe (C207) 01/09→

404400				TPM0002						92163600	ø 300 x 22 x 57.1	
E 350 (207.356)	04/11→	225 / 306								PRO 92163603	ø 300 x 22 x 57.1	
E 350 (207.356)	05/11→	200 / 272								TPM0002		
E 350 CGI (207.357)	01/09→	215 / 292								91066900	ø 164 x 25	
										97038300		
404500			Luc	2431001	[o] 24310 19.4		Ate	2425301	[o] 24253 17.9		
E 350 4-matic (207.388)	02/13→	225 / 306	Luc	epad 2431081	[o] 24310 19.4		Ate	epad 2425381	[o] 24253 17.9		
				98024701	L95			98024701	L95		
			Luc	82518300			Ate	82503500			
				92163500	ø 322 x 32 x 64.5	⊖ AMG sport pack. ⊖ sport pack.		TPM0002			
				PRO 92163503	ø 322 x 32 x 64.5	⊖ AMG sport pack. ⊖ sport pack.		91066900	ø 164 x 25		
				PRO 92163403	ø 322 x 32 x 64.5	⊕ AMG sport pack. ⊕ sport pack.					
				TPM0002							
404600			Luc	2431001	[o] 24310 19.4		Ate	2425301	[o] 24253 17.9	alumin. call.	
E 350 BlueTEC	03/13→	185 / 252	Luc	epad 2431081	[o] 24310 19.4		Ate	epad 2425381	[o] 24253 17.9	alumin. call.	
				98024701	L95		Ate	2425401	[o] 24254 17.9	cast iron call.	
			Luc	82518300			Ate	epad 2425481	[o] 24254 17.9	cast iron call.	
				92163500	ø 322 x 32 x 64.5	⊖ AMG sport pack. ⊖ sport pack.		98024701	L95		
				PRO 92163503	ø 322 x 32 x 64.5	⊖ AMG sport pack. ⊖ sport pack.	Ate	82062900			
				PRO 92163403	ø 322 x 32 x 64.5	⊕ AMG sport pack. ⊕ sport pack.	Ate	82503500			
				TPM0002				TPM0002			
								91066900	ø 164 x 25		
404700			Luc	2431001	[o] 24310 19.4		Ate	2425301	[o] 24253 17.9		
E 350 BlueTEC (207.326)	05/14→	190 / 258	Luc	epad 2431081	[o] 24310 19.4		Ate	epad 2425381	[o] 24253 17.9		
				98024701	L95			98024701	L95		
			Luc	82518300			Ate	82503500			
				92163500	ø 322 x 32 x 64.5	⊖ AMG sport pack. ⊖ sport pack.		TPM0002			
				PRO 92163503	ø 322 x 32 x 64.5	⊖ AMG sport pack. ⊖ sport pack.		91066900	ø 164 x 25		
				TPM0002							
404800			Luc	2431001	[o] 24310 19.4		Ate	2425401	[o] 24254 17.9		
E 350 CDI	04/11→	195 / 265	Luc	epad 2431081	[o] 24310 19.4		Ate	epad 2425481	[o] 24254 17.9		
E 350 CDI (207.322)	01/09→	170 / 231		98024701	L95			98024701	L95		
			Luc	82518300			Ate	82062900			
				92163500	ø 322 x 32 x 64.5	⊖ sport pack. ⊖ AMG sport pack.	Ate	82503500			
				PRO 92163503	ø 322 x 32 x 64.5	⊖ sport pack. ⊖ AMG sport pack.		92163600	ø 300 x 22 x 57.1		
				PRO 92163403	ø 322 x 32 x 64.5	⊕ sport pack. ⊕ AMG sport pack.		PRO 92163603	ø 300 x 22 x 57.1		
				TPM0002				TPM0002			
								91066900	ø 164 x 25		
								97038300			
404900			Luc	2431001	[o] 24310 19.4		Ate	2425301	[o] 24253 17.9		
E 400	06/13→	245 / 333									

E-CLASS Coupe (C207) 01/09→

		kW / hp											
404900			Luc		2431081	[o] 24310 19.4		Ate		2425381	[o] 24253 17.9	
E 400	06/13→	245 / 333			98024701	L95				98024701	L95	
			Luc		82518300			Ate		82062900		
				PRO	92163403	ø 322 x 32 x 64.5		Ate		82503500		
					TPM0002					TPM0002		
										91066900	ø 164 x 25	
405000			Luc		2431001	[o] 24310 19.4		Ate		2425301	[o] 24253 17.9	
E 400 (207.361)	07/14→	245 / 333	Luc		2431081	[o] 24310 19.4		Ate		2425381	[o] 24253 17.9	
					98024701	L95				98024701	L95	
			Luc		82518300			Ate		82503500		
					TPM0002					TPM0002		
										91066900	ø 164 x 25	
405100			Luc		2431001	[o] 24310 19.4		Ate		2425401	[o] 24254 17.9	
E 500 (207.372)	01/09→	285 / 388	Luc		2431081	[o] 24310 19.4		Ate		2425481	[o] 24254 17.9	
					98024701	L95				98024701	L95	
			Luc		82518300			Ate		82062900		
				PRO	92224603	ø 344 x 32 x 64.6		Ate		82503500		
					TPM0002					92163600	ø 300 x 22 x 57.1	
									PRO	92163603	ø 300 x 22 x 57.1	
										TPM0002		
										91066900	ø 164 x 25	
										97038300		
405200			Luc		2431001	[o] 24310 19.4	⊖ USA	Ate		2425401	[o] 24254 17.9	
E 500 (207.373)	09/11→	300 / 408	Luc		2431081	[o] 24310 19.4	⊖ USA	Ate		2425481	[o] 24254 17.9	
			Ate		2515803	[o] 25158 19	⊕ USA			98024701	L95	
					98024701	L95		Ate		82062900		
			Luc		82518300			Ate		82503500		
				PRO	92224603	ø 344 x 32 x 64.6				92163600	ø 300 x 22 x 57.1	
					TPM0002				PRO	92163603	ø 300 x 22 x 57.1	
										TPM0002		
										91066900	ø 164 x 25	
										97038300		

E-CLASS Estate (S210) 06/96→03/03

405300			Ate		2166404	[o] 21664 19.8		Ate		2130504	[o] 21305 15.5	
E 200 T (210.235)	06/96→08/00	100 / 136										
E 200 T Kompressor (210.248)	08/00→03/03	120 / 163	Ate		2166481	[o] 21664 19.8		Ate		2130581	[o] 21305 15.5	
E 240 T (210.262)	08/00→03/03	125 / 170			98021300	L90		Ate		82046000		
			Ate		82032000				PRO	92091103	ø 290 x 12 x 56	
			Ate		82062900					TPM0001		
				PRO	92105903	ø 288 x 25 x 46.5				91057200	ø 164 x 25	
					TPM0001					97035500		

E-CLASS Estate (S210) 06/96→03/03

			405400											
E 200 T Kompressor (210.245)	06/97→03/03	137 / 186	Ate		2167001	[o] 21670 20.3		Ate		2130504	[o] 21305 15.5	
			Ate	epad	2167081	[o] 21670 20.3		Ate	epad	2130581	[o] 21305 15.5	
E 280 T (210.263)	12/96→03/03	150 / 204			98021300	L90				98021301	L90	
E 280 T 4-matic (210.281)	12/96→03/03	150 / 204	Ate		82032000			Ate		82046000		
E 320 T (210.265)	12/96→03/03	165 / 224	Ate		82062900				PRO	92091103	ø 290 x 12 x 56	
E 320 T 4-matic (210.282)	12/96→03/03	165 / 224		PRO	92106003	ø 300 x 28 x 46.5				TPM0001		
				PRO	92106005	ø 300 x 28 x 46.5				91057200	ø 164 x 25	
					TPM0001					97035500		
			405500									
E 220 T CDI (210.206)	06/98→07/99	92 / 125	Ate		2166404	[o] 21664 19.8		Ate		2130504	[o] 21305 15.5	
E 220 T CDI (210.206)	05/99→03/03	100 / 136	Ate	epad	2166481	[o] 21664 19.8		Ate	epad	2130581	[o] 21305 15.5	
E 220 T CDI (210.206)	07/99→03/03	105 / 143										
E 250 T D (210.210)	06/96→07/99	83 / 113	Ate		2167001	[o] 21670 20.3	LWB	Ate		82046000		
E 250 T Turbo-D (210.215)	06/97→07/99	110 / 150	Ate	epad	2167081	[o] 21670 20.3	LWB		PRO	92091103	ø 290 x 12 x 56	
E 290 T Turbo-D (210.217)	06/96→07/99	95 / 129			98021300	L90				TPM0001		
			Ate		82032000					91044500	ø 164 x 25	LWB
			Ate		82062900					91057200	ø 164 x 25	
				PRO	92105903	ø 288 x 25 x 46.5				97035500		
				PRO	92106003	ø 300 x 28 x 46.5	LWB					
				PRO	92106005	ø 300 x 28 x 46.5	LWB					
					TPM0001							
			405600									
E 240 T (210.261)	06/97→03/03	125 / 170	Ate		2166404	[o] 21664 19.8		Ate		2130504	[o] 21305 15.5	
			Ate	epad	2166481	[o] 21664 19.8		Ate	epad	2130581	[o] 21305 15.5	
			Ate		2167001	[o] 21670 20.3	⊕ ESP →07/99			98021301	L90	
			Ate	epad	2167081	[o] 21670 20.3	⊕ ESP →07/99	Ate		82046000		
					98021300	L90			PRO	92091103	ø 290 x 12 x 56	
			Ate		82032000					TPM0001		
			Ate		82062900					91057200	ø 164 x 25	
				PRO	92105903	ø 288 x 25 x 46.5				97035500		
				PRO	92106003	ø 300 x 28 x 46.5	⊕ ESP →07/99					
				PRO	92106005	ø 300 x 28 x 46.5	⊕ ESP →07/99					
					TPM0001							
			405700									
E 270 T CDI	02/00→03/03	120 / 163	Ate		2167001	[o] 21670 20.3		Ate		2130504	[o] 21305 15.5	cal. + 2 holding pins
E 270 T CDI (210.216)	07/99→03/03	125 / 170	Ate	epad	2167081	[o] 21670 20.3		Ate	epad	2130581	[o] 21305 15.5	cal. + 2 holding pins
E 320 T CDI (210.226)	07/99→03/03	145 / 197			98021300	L90		Ate		2189801	[o] 21898 15.7	cal. + 1 holding pin
			Ate		82032000			Ate	epad	2189881	[o] 21898 15.7	cal. + 1 holding pin
			Ate		82062900			Ate		82046000		cal. + 2 holding pins
				PRO	92106003	ø 300 x 28 x 46.5		Ate		82058800		cal. + 1 holding pin
				PRO	92106005	ø 300 x 28 x 46.5			PRO	92091103	ø 290 x 12 x 56	
					TPM0001					TPM0001		
										91057200	ø 164 x 25	
										97035500		

E-CLASS Estate (S210) 06/96→03/03

		405800													
E 300 T Turbo-D (210.225)	12/96→07/99	130 / 177	Ate		2167001	[o] 21670 20.3		Ate		2130504	[o] 21305 15.5	cal. + 2 holding pins →A379346
			Ate	epad	2167081	[o] 21670 20.3		Ate	epad	2130581	[o] 21305 15.5	cal. + 2 holding pins →A379346
					98021300	L90		Ate		2189801	[o] 21898 15.7	cal. + 1 holding pin A379347→
			Ate		82032000			Ate	epad	2189881	[o] 21898 15.7	cal. + 1 holding pin A379347→
			Ate		82062900					98021301	L90	
				PRO	92106003	ø 300 x 28 x 46.5		Ate		82046000		cal. + 2 holding pins →A379346
				PRO	92106005	ø 300 x 28 x 46.5		Ate		82058800		cal. + 1 holding pin A379347→
					TPM0001				PRO	92091103	ø 290 x 12 x 56	
										TPM0001		
										91032800	ø 164 x 20	
										97011600		
		405900	Ate		2115307	[o] 21153 17.5	→07/99	Ate		2130503	[o] 21305 16	
E 430 T (210.270)	06/97→03/03	205 / 279	Ate		2148401	[o] 21484 20.8	08/99→	Ate	epad	2130581	[o] 21305 15.5	
			Ate		2167001	[o] 21670 20.3	⊖ arm.veh. ⊕ USA			98021301	L90	
			Ate	epad	2167081	[o] 21670 20.3	⊖ arm.veh. ⊕ USA	Ate		82046000		
					98021300	L90			PRO	92091103	ø 290 x 12 x 56	
			Ate		82504900		→07/99		PRO	92176203	ø 300 x 22 x 55.5	
			Ate		82032000		⊖ arm.veh. ⊕ USA			TPM0001		
			Ate		82059200		08/99→			91057200	ø 164 x 25	
			Ate		82062900		⊖ arm.veh. ⊕ USA			97035500		
					92073100	ø 316 x 28 x 46.5	→07/99					
				PRO	92106003	ø 300 x 28 x 46.5	⊖ arm.veh. ⊕ USA					
				PRO	92106005	ø 300 x 28 x 46.5	⊖ arm.veh. ⊕ USA					
				PRO	92181903	ø 330 x 32 x 47						
					TPM0001							
		406000	Ate		2148401	[o] 21484 20.8		Ate		2130503	[o] 21305 16	
E 430 T 4-matic (210.283)	05/99→03/03	205 / 279	Ate		82059200			Ate	epad	2130581	[o] 21305 15.5	
E 55 T AMG 4-matic (210.283)	03/01→03/03	260 / 354	Ate		82062900					98021301	L90	
				PRO	92181903	ø 330 x 32 x 47		Ate		82046000		
					TPM0001				PRO	92176203	ø 300 x 22 x 55.5	
										TPM0001		
										91057200	ø 164 x 25	
										97035500		
		406100	Ate		2148401	[o] 21484 20.8		Ate		2130503	[o] 21305 16	
E 55 T AMG (210.274)	08/97→03/03	260 / 354	Ate		82059200			Ate	epad	2130581	[o] 21305 15.5	
			Ate		82062900					98021301	L90	
					TPM0001			Ate		82046000		
									PRO	92176203	ø 300 x 22 x 55.5	
										TPM0001		
										91057200	ø 164 x 25	

I - M

		kW / hp											
E-CLASS Estate (S210) 06/96→03/03													
		406100											
E 55 T AMG (210.274)	08/97→03/03	260 / 354									97035500		
E-CLASS Kombi (S210) 06/96→03/03 → E-CLASS Estate (S210), Page 641													
E-CLASS Saloon (W210) 06/95→03/02 → E-CLASS (W210), Page 617													
E-CLASS Saloon (W211) 03/02→03/09 → E-CLASS (W211), Page 619													
E-CLASS Saloon (W212) 01/09→ → E-CLASS (W212), Page 627													
E-CLASS Stufenheck (W210) 06/95→03/02 → E-CLASS (W210), Page 617													
E-CLASS Stufenheck (W211) 03/02→03/09 → E-CLASS (W211), Page 619													
E-CLASS Stufenheck (W212) 01/09→ → E-CLASS (W212), Page 627													
E-CLASS T-Model (S211) 03/03→07/09													
		406200	Ate		2148401	[o] 21484 20.8	→10/05 →X 196564 ⊕ sport pack. ⊕ AMG sport pack.	Ate		2333403	[o] 23334 16.8	
3.5 4-matic	08/04→08/06	205 / 279											
E 280 T CDI 4-matic (211.284)	03/05→07/09	140 / 190	Ate		2392201	[o] 23922 21	11/05→ X 196565→ ⊕ sport pack. ⊕ AMG sport pack.	Ate	epad	2333481	[o] 23334 16.8	
E 320 T CDI 4-matic (211.289)	03/05→07/09	165 / 224											
E 350 T 4-matic (211.287)	03/05→07/09	200 / 272	Ate	epad	2392281	[o] 23922 21	11/05→ X 196565→ ⊕ sport pack. ⊕ AMG sport pack.			98024701	L95	
			Ate		2472201	[o] 24722 19	⊖ sport pack. ⊖ AMG sport pack.	Ate		82062900		
			Ate	epad	2472281	[o] 24722 19	⊖ sport pack. ⊖ AMG sport pack.	Ate		82076400		
					98024700	L95	right ⊖ sport pack.		PRO	92115503	ø 300 x 22 x 68	
					98029400		left ⊖ sport pack.		PRO	92115505	ø 300 x 22 x 68	
					98040100	L95	⊕ sport pack.			TPM0002		
			Ate		82059200					91058800	ø 180 x 25	
					92152100	ø 304 x 30 x 47.4	⊖ sport pack. ⊖ AMG sport pack.			97035400		
				PRO	92152103	ø 304 x 30 x 47.4	⊖ sport pack. ⊖ AMG sport pack.					
				PRO	92152105	ø 304 x 30 x 47.4	⊖ sport pack. ⊖ AMG sport pack.					
					92124100	ø 330 x 32 x 47.5	⊕ sport pack. ⊕ AMG sport pack.					
					TPM0002							
		406300	Bre		2374502	[o] 23745 17.7		Ate		2333403	[o] 23334 16.8	
350 CGI (211.257)	05/06→07/09	215 / 292	Bre	epad	2374581	[o] 23745 17.7		Ate	epad	2333481	[o] 23334 16.8	
			Bos		2374303	[+] 23743 20.5	⊖ sport pack. ⊖ AMG sport pack. ⊕ USA			98024701	L95	
			Bos	epad	2374381	[+] 23743 20.5	⊖ sport pack. ⊖ AMG sport pack. ⊕ USA	Ate		82062900		
					98024701	L95		Ate		82076400		
			Bos		82039900				PRO	92115503	ø 300 x 22 x 68	
			Bre		82504800				PRO	92115505	ø 300 x 22 x 68	
			Bre		82518800		⊕ J ⊖ sport pack. ⊖ AMG sport pack.			91058800	ø 180 x 25	
			Bos		82063800					97035400		
			Bos		82510100							
				PRO	92115203	ø 295 x 28 x 54.5	⊕ USA A970951→					
				PRO	92115205	ø 295 x 28 x 54.5	⊕ USA A970951→					
				PRO	92115303	ø 312 x 28 x 64.5	⊕ J ⊕ AUS ⊕ USA →A870951					
				PRO	92120203	ø 330 x 32 x 64.5	⊕ sport pack. ⊕ AMG sport pack.					
		406400	Bre		2374502	[o] 23745 17.7	⊕ sport pack. ⊕ AMG sport pack.	Ate		2333403	[o] 23334 16.8	
E 200 CDI (211.207)	04/06→07/09	100 / 136	Bre	epad	2374581	[o] 23745 17.7	⊕ sport pack. ⊕ AMG sport pack.	Ate	epad	2333481	[o] 23334 16.8	
			Bos		2374303	[+] 23743 20.5	⊖ sport pack. ⊖ AMG sport pack.			98024701	L95	
			Bos	epad	2374381	[+] 23743 20.5	⊖ sport pack. ⊖ AMG sport pack.	Ate		82062900		
					98024701	L95	right	Ate		82076400		

E-CLASS T-Model (S211) 03/03→07/09

406400															
E 200 CDI (211.207)	04/06→07/09	100 / 136			98029400			left			92115403	ø 300 x 10 x 68.5	⊖ rent. veh. ⊖ taxi ⊖ sport pack. ⊖ AMG sport pack.
			Bos		82039900					PRO	92115405	ø 300 x 10 x 68.5	⊖ rent. veh. ⊖ taxi ⊖ sport pack. ⊖ AMG sport pack.
			Bre		82504800			⊕ sport pack. ⊕ AMG sport pack.		PRO	92115503	ø 300 x 22 x 68	⊕ rent. veh. ⊕ taxi ⊕ sport pack. ⊕ AMG sport pack.
			Bos		82063800					PRO	92115505	ø 300 x 22 x 68	⊕ rent. veh. ⊕ taxi ⊕ sport pack. ⊕ AMG sport pack.
			Bos		82510100						91058800	ø 180 x 25	
				PRO	92115103	ø 295 x 28 x 54.5		⊖ sport pack. ⊖ AMG sport pack.			97035400		
				PRO	92115105	ø 295 x 28 x 54.5		⊖ sport pack. ⊖ AMG sport pack.					
				PRO	92115203	ø 295 x 28 x 54.5		⊕ rent. veh. ⊕ taxi ⊕ reinf.brake					
				PRO	92115205	ø 295 x 28 x 54.5		⊕ rent. veh. ⊕ taxi ⊕ reinf.brake					
				PRO	92120203	ø 330 x 32 x 64.5		⊕ sport pack. ⊕ AMG sport pack.					
406500													
E 200 Kompressor (211.241)	04/06→07/09	135 / 184	Bre		2374502	[o] 23745 17.7		⊕ sport pack. ⊕ AMG sport pack.	Ate		2333403	[o] 23334 16.8	
E 200 T Kompressor (211.242)	03/03→07/09	120 / 163	Bre	epad	2374581	[o] 23745 17.7		⊕ sport pack. ⊕ AMG sport pack.	Ate	epad	2333481	[o] 23334 16.8	
			Bos		2374303	[+] 23743 20.5		⊖ sport pack. ⊖ AMG sport pack.			98024701	L95	
			Bos	epad	2374381	[+] 23743 20.5		⊖ sport pack. ⊖ AMG sport pack.	Ate		82062900		
					98024701	L95		right	Ate		82076400		
					98029400			left		PRO	92115403	ø 300 x 10 x 68.5	⊖ rent. veh. ⊖ taxi ⊖ sport pack. ⊖ AMG sport pack.
			Bos		82039900					PRO	92115405	ø 300 x 10 x 68.5	⊖ rent. veh. ⊖ taxi ⊖ sport pack. ⊖ AMG sport pack.
			Bre		82504800			⊕ sport pack. ⊕ AMG sport pack.		PRO	92115503	ø 300 x 22 x 68	⊕ rent. veh. ⊕ taxi ⊕ sport pack. ⊕ AMG sport pack.
			Bos		82063800					PRO	92115505	ø 300 x 22 x 68	⊕ rent. veh. ⊕ taxi ⊕ sport pack. ⊕ AMG sport pack.
			Bos		82510100						91058800	ø 180 x 25	
				PRO	92115103	ø 295 x 28 x 54.5		⊖ sport pack. ⊖ AMG sport pack. ⊖ rent. veh. ⊖ taxi			97035400		
				PRO	92115105	ø 295 x 28 x 54.5		⊖ sport pack. ⊖ AMG sport pack. ⊖ rent. veh. ⊖ taxi					
				PRO	92115203	ø 295 x 28 x 54.5		⊕ taxi ⊕ rent. veh. ⊕ sport pack. ⊕ AMG sport pack.					
				PRO	92115205	ø 295 x 28 x 54.5		⊕ taxi ⊕ rent. veh. ⊕ sport pack. ⊕ AMG sport pack.					
406600													
E 220 CDI (211.206)	03/03→07/09	100 / 136	Bos		2374303	[+] 23743 20.5			Ate		2333403	[o] 23334 16.8	
E 220 T CDI	03/03→07/09	120 / 163	Bos	epad	2374381	[+] 23743 20.5			Ate	epad	2333481	[o] 23334 16.8	
E 220 T CDI (211.206)	03/03→07/09	110 / 150			98024701	L95		right			98024701	L95	
E 220 T CDI (211.208)	04/06→07/09	125 / 170			98029400			left	Ate		82062900		
E 240 T (211.261)	03/03→07/09	130 / 177	Bos		82039900				Ate		82076400		
			Bos		82063800					PRO	92115403	ø 300 x 10 x 68.5	⊖ rent. veh. ⊖ taxi
			Bos		82510100					PRO	92115405	ø 300 x 10 x 68.5	⊖ rent. veh. ⊖ taxi
				PRO	92115103	ø 295 x 28 x 54.5		⊖ rent. veh. ⊖ taxi		PRO	92115503	ø 300 x 22 x 68	⊕ rent. veh. ⊕ taxi
				PRO	92115105	ø 295 x 28 x 54.5		⊖ rent. veh. ⊖ taxi		PRO	92115505	ø 300 x 22 x 68	⊕ rent. veh. ⊕ taxi
				PRO	92115203	ø 295 x 28 x 54.5		⊕ rent. veh. ⊕ taxi			91058800	ø 180 x 25	
				PRO	92115205	ø 295 x 28 x 54.5		⊕ rent. veh. ⊕ taxi			97035400		
406700													
E 230 T (211.252)	05/07→07/09	150 / 204	Bre		2374502	[o] 23745 17.7		⊕ sport pack. ⊕ AMG sport pack.	Ate		2333403	[o] 23334 16.8	
			Bre	epad	2374581	[o] 23745 17.7		⊕ sport pack. ⊕ AMG sport pack.	Ate	epad	2333481	[o] 23334 16.8	
			Bos		2374303	[+] 23743 20.5		⊖ sport pack. ⊖ AMG sport pack.			98024701	L95	
			Bos	epad	2374381	[+] 23743 20.5		⊖ sport pack. ⊖ AMG sport pack.	Ate		82062900		
					98024701	L95			Ate		82076400		

kW / hp

E-CLASS T-Model (S211) 03/03→07/09

406700													
E 230 T (211.252)	05/07→07/09	150 / 204	Bre		82504800		⊕ sport pack. ⊕ AMG sport pack.				92115503	ø 300 x 22 x 68	
				PRO	92115203	ø 295 x 28 x 54.5	⊕ J ⊕ USA ⊕ AUS			PRO	92115505	ø 300 x 22 x 68	
				PRO	92115205	ø 295 x 28 x 54.5	⊕ J ⊕ USA ⊕ AUS				91058800	ø 180 x 25	
				PRO	92115303	ø 312 x 28 x 64.5	⊖ sport pack. ⊖ AMG sport pack.				97035400		
				PRO	92120203	ø 330 x 32 x 64.5	⊕ sport pack. ⊕ AMG sport pack.						
406800													
E 240 T 4-matic (211.280)	07/03→07/09	130 / 177	Ate		2148401	[o] 21484 20.8	→10/05 →X 196564 ⊕ sport pack. ⊕ AMG sport pack.		Ate		2333403	[o] 23334 16.8	
			Ate		2392201	[o] 23922 21	11/05→ X 196565→ ⊕ sport pack. ⊕ AMG sport pack.		Ate	epad	2333481	[o] 23334 16.8	
			Ate	epad	2392281	[o] 23922 21	11/05→ X 196565→ ⊕ sport pack. ⊕ AMG sport pack.				98024701	L95	
			Ate		2472201	[o] 24722 19	⊖ sport pack. ⊖ AMG sport pack.		Ate		82062900		
			Ate	epad	2472281	[o] 24722 19	⊖ sport pack. ⊖ AMG sport pack.		Ate		82076400		
					98024701	L95	right			PRO	92115403	ø 300 x 10 x 68.5	
					98029400		left			PRO	92115405	ø 300 x 10 x 68.5	
			Ate		82059200						TPM0002		
					92152100	ø 304 x 30 x 47.4	⊖ sport pack. ⊖ AMG sport pack.				91058800	ø 180 x 25	
				PRO	92152103	ø 304 x 30 x 47.4	⊖ sport pack. ⊖ AMG sport pack.				97035400		
				PRO	92152105	ø 304 x 30 x 47.4	⊖ sport pack. ⊖ AMG sport pack.						
					92124100	ø 330 x 32 x 47.5	⊕ sport pack. ⊕ AMG sport pack.						
					TPM0002								
406900													
E 270 T CDI (211.216)	03/03→07/09	120 / 163	Bos		2374303	[+] 23743 20.5			Ate		2333403	[o] 23334 16.8	
E 270 T CDI (211.216)	03/03→07/09	130 / 177	Bos	epad	2374381	[+] 23743 20.5			Ate	epad	2333481	[o] 23334 16.8	
					98024701	L95	right				98024701	L95	
					98029400		left		Ate		82062900		
			Bos		82039900				Ate		82076400		
			Bos		82063800					PRO	92115503	ø 300 x 22 x 68	
			Bos		82510100					PRO	92115505	ø 300 x 22 x 68	
				PRO	92115203	ø 295 x 28 x 54.5					91058800	ø 180 x 25	
				PRO	92115205	ø 295 x 28 x 54.5					97035400		
407000													
E 280 T (211.254)	03/05→07/09	170 / 231	Bre		2374502	[o] 23745 17.7			Ate		2333403	[o] 23334 16.8	
			Bre	epad	2374581	[o] 23745 17.7			Ate	epad	2333481	[o] 23334 16.8	
					98024701	L95					98024701	L95	
			Bos		82039900				Ate		82062900		
			Bre		82504800				Ate		82076400		
			Bre		82518800		⊖ sport pack. ⊖ AMG sport pack.			PRO	92115503	ø 300 x 22 x 68	
			Bos		82063800					PRO	92115505	ø 300 x 22 x 68	
			Bos		82510100						91058800	ø 180 x 25	
				PRO	92115203	ø 295 x 28 x 54.5	⊕ AUS ⊕ J				97035400		
				PRO	92115205	ø 295 x 28 x 54.5	⊕ AUS ⊕ J						
				PRO	92120203	ø 330 x 32 x 64.5	⊕ sport pack. ⊕ AMG sport pack.						
407100													
E 280 T 4-matic (211.292)	03/05→07/09	170 / 231	Ate		2392201	[o] 23922 21	11/05→ X 196565→ ⊕ sport pack. ⊕ AMG sport pack.		Ate		2333403	[o] 23334 16.8	
			Ate	epad	2392281	[o] 23922 21	11/05→ X 196565→ ⊕ sport pack. ⊕ AMG sport pack.		Ate	epad	2333481	[o] 23334 16.8	

E-CLASS T-Model (S211) 03/03→07/09

407100														
E 280 T 4-matic (211.292)	03/05→07/09	170 / 231	Ate		2472201	[o] 24722 19	⊖ sport pack. ⊖ AMG sport pack.			98024701	L95			
			Ate	 epad	2472281	[o] 24722 19	⊖ sport pack. ⊖ AMG sport pack.		Ate 	82062900				
					98024701	L95	right ⊖ sport pack.		Ate 	82076400				
					98029400		left ⊖ sport pack.		 PRO	92115403	ø 300 x 10 x 68.5			
					98040100	L95	⊕ sport pack.		 PRO	92115405	ø 300 x 10 x 68.5			
			Ate		82059200					TPM0002				
					92152100	ø 304 x 30 x 47.4	⊖ sport pack. ⊖ AMG sport pack.			91058800	ø 180 x 25			
				 PRO	92152103	ø 304 x 30 x 47.4	⊖ sport pack. ⊖ AMG sport pack.			97035400				
				 PRO	92152105	ø 304 x 30 x 47.4	⊖ sport pack. ⊖ AMG sport pack.							
					92124100	ø 330 x 32 x 47.5	⊕ sport pack. ⊕ AMG sport pack.							
					TPM0002									
407200														
E 280 T CDI (211.220)	03/05→07/09	140 / 190	Bre		2374502	[o] 23745 17.7	⊕ sport pack. ⊕ AMG sport pack.		Ate 	2333403	[o] 23334 16.8			
			Bre	 epad	2374581	[o] 23745 17.7	⊕ sport pack. ⊕ AMG sport pack.		Ate  epad	2333481	[o] 23334 16.8			
			Bos		2374303	[+] 23743 20.5	⊖ sport pack. ⊖ AMG sport pack.			98024701	L95			
			Bos	 epad	2374381	[+] 23743 20.5	⊖ sport pack. ⊖ AMG sport pack.		Ate 	82062900				
					98024701	L95			Ate 	82076400				
			Bos		82039900				 PRO	92115503	ø 300 x 22 x 68			
			Bre		82504800		⊕ sport pack. ⊕ AMG sport pack.		 PRO	92115505	ø 300 x 22 x 68			
			Bos		82063800					91058800	ø 180 x 25			
			Bos		82510100					97035400				
				 PRO	92115203	ø 295 x 28 x 54.5	⊖ sport pack. ⊖ AMG sport pack.							
				 PRO	92115205	ø 295 x 28 x 54.5	⊖ sport pack. ⊖ AMG sport pack.							
				 PRO	92120203	ø 330 x 32 x 64.5	⊕ sport pack. ⊕ AMG sport pack.							
407300														
E 280 T CDI (211.223)	05/04→07/09	130 / 177	Bre		2374502	[o] 23745 17.7	⊖ J ⊖ USA ⊖ AUS		Ate	2333403	[o] 23334 16.8			
			Bre	epad	2374581	[o] 23745 17.7	⊖ J ⊖ USA ⊖ AUS		Ate epad	2333481	[o] 23334 16.8			
			Bos		2374303	[+] 23743 20.5	⊕ J ⊕ USA ⊕ AUS			98024701	L95			
			Bos	epad	2374381	[+] 23743 20.5	⊕ J ⊕ USA ⊕ AUS		Ate	82062900				
					98024701	L95	right		Ate	82076400				
					98029400		left		PRO	92115503	ø 300 x 22 x 68			
			Bos		82039900				PRO	92115505	ø 300 x 22 x 68			
			Bre		82504800		⊖ J ⊖ USA ⊖ AUS			91058800	ø 180 x 25			
			Bos		82063800					97035400				
			Bos		82510100									
				PRO	92115203	ø 295 x 28 x 54.5	⊖ USA							
				PRO	92115205	ø 295 x 28 x 54.5	⊖ USA							
				PRO	92115303	ø 312 x 28 x 64.5	⊖ USA							
407400														
E 320 T (211.265)	03/03→07/09	165 / 224	Bre		2374502	[o] 23745 17.7	⊖ J ⊖ USA ⊖ AUS		Ate	2333403	[o] 23334 16.8			
			Bre	epad	2374581	[o] 23745 17.7	⊖ J ⊖ USA ⊖ AUS		Ate epad	2333481	[o] 23334 16.8			
			Bos		2374303	[+] 23743 20.5	⊕ AUS ⊕ J ⊕ USA			98024701	L95			
			Bos	epad	2374381	[+] 23743 20.5	⊕ AUS ⊕ J ⊕ USA		Ate	82062900				

E-CLASS T-Model (S211) 03/03→07/09

			kW / hp											
407400 E 320 T (211.265)	03/03→07/09	165 / 224			98024701	L95	right		Ate		82076400		
					98029400		left				92115503	ø 300 x 22 x 68	
			Bos		82039900						92115505	ø 300 x 22 x 68	
			Bre		82504800		⊖ J ⊖ USA ⊖ AUS				91058800	ø 180 x 25	
			Bos		82063800						97035400		
			Bos		82510100								
					92115203	ø 295 x 28 x 54.5	⊕ AUS ⊕ J ⊕ USA						
					92115205	ø 295 x 28 x 54.5	⊕ AUS ⊕ J ⊕ USA						
					92115303	ø 312 x 28 x 64.5	⊖ J ⊖ USA ⊖ AUS						
407500 E 320 T 4-matic (211.282)	07/03→07/09	165 / 224	Ate		2148401	[o] 23484 20.8	→10/05 →X 196564 ⊕ sport pack. ⊕ AMG sport pack.		Ate		2333403	[o] 23334 16.8	
			Ate		2392201	[o] 23922 21	11/05→ X 196565→ ⊕ sport pack. ⊕ AMG sport pack.		Ate		2333481	[o] 23334 16.8	
			Ate		2392281	[o] 23922 21	11/05→ X 196565→ ⊕ sport pack. ⊕ AMG sport pack.				98024701	L95	
			Ate		2472201	[o] 24722 19	⊖ sport pack. ⊖ AMG sport pack.		Ate		82062900		
			Ate		2472281	[o] 24722 19	⊖ sport pack. ⊖ AMG sport pack.		Ate		82076400		
					98024701	L95	right				92115403	ø 300 x 10 x 68.5	⊕ J ⊕ USA X 122526→ 01/04→
					98029400		left				92115405	ø 300 x 10 x 68.5	⊕ J ⊕ USA X 122526→ 01/04→
			Ate		82059200						92115503	ø 300 x 22 x 68	→X 122525 →01/04
					92152100	ø 304 x 30 x 47.4	⊖ sport pack. ⊖ AMG sport pack.				92115505	ø 300 x 22 x 68	→X 122525 →01/04
					92152103	ø 304 x 30 x 47.4	⊖ sport pack. ⊖ AMG sport pack.				TPM0002		
					92152105	ø 304 x 30 x 47.4	⊖ sport pack. ⊖ AMG sport pack.				91058800	ø 180 x 25	
					92124100	ø 330 x 32 x 47.5	⊕ sport pack. ⊕ AMG sport pack.				97035400		
					TPM0002								
407600 E 320 T CDI (211.222)	03/05→07/09	165 / 224	Bre		2374502	[o] 23745 17.7	⊖ J ⊖ AUS		Ate		2333403	[o] 23334 16.8	
			Bre		2374581	[o] 23745 17.7	⊖ J ⊖ AUS		Ate		2333481	[o] 23334 16.8	
			Bos		2374303	[+] 23743 20.5	⊕ AUS ⊕ J				98024701	L95	
			Bos		2374381	[+] 23743 20.5	⊕ AUS ⊕ J		Ate		82062900		
					98024701	L95	right		Ate		82076400		
					98029400		left				92115503	ø 300 x 22 x 68	
			Bos		82039900						92115505	ø 300 x 22 x 68	
			Bre		82504800		⊖ J ⊖ AUS				91058800	ø 180 x 25	
			Bre		82518800		⊖ sport pack. ⊖ AMG sport pack.				97035400		
			Bos		82063800								
			Bos		82510100								
					92115203	ø 295 x 28 x 54.5	⊕ AUS ⊕ J ⊕ USA ⊖ sport pack. ⊖ AMG sport pack.						
					92115205	ø 295 x 28 x 54.5	⊕ AUS ⊕ J ⊕ USA ⊖ sport pack. ⊖ AMG sport pack.						
					92115303	ø 312 x 28 x 64.5	⊖ J ⊖ USA ⊖ AUS ⊖ sport pack. ⊖ AMG sport pack.						
					92120203	ø 330 x 32 x 64.5	⊕ sport pack. ⊕ AMG sport pack.						
407700 E 320 T CDI (211.226)	03/03→07/09	150 / 204	Bre		2374502	[o] 23745 17.7	⊖ J ⊖ USA ⊖ AUS		Ate		2333403	[o] 23334 16.8	
			Bre		2374581	[o] 23745 17.7	⊖ J ⊖ USA ⊖ AUS		Ate		2333481	[o] 23334 16.8	
			Bos		2374303	[+] 23743 20.5	⊕ AUS ⊕ J ⊕ USA				98024701	L95	

→

kW / hp

E-CLASS T-Model (S211) 03/03→07/09

E 320 T CDI (211.226) 03/03→07/09 407700 150 / 204	Bos		2374381	[+] 23743 20.5	⊕ AUS ⊕ J ⊕ USA	Ate		82062900		
			98024701	L95	right	Ate		82076400		
			98029400		left		PRO	92115503	ø 300 x 22 x 68	
	Bos		82039900				PRO	92115505	ø 300 x 22 x 68	
	Bre		82504800		⊖ J ⊖ USA ⊖ AUS			91058800	ø 180 x 25	
	Bos		82063800					97035400		
	Bos		82510100							
		PRO	92115203	ø 295 x 28 x 54.5	⊕ USA					
		PRO	92115205	ø 295 x 28 x 54.5	⊕ USA					
		PRO	92115303	ø 312 x 28 x 64.5	⊖ USA					
E 350 T (211.256) 03/05→07/09 407800 200 / 272	Bre		2374502	[o] 23745 17.7		Ate		2333403	[o] 23334 16.8	
	Bre		2374581	[o] 23745 17.7		Ate		2333481	[o] 23334 16.8	
	Bos		2374303	[+] 23743 20.5	⊖ sport pack. ⊖ AMG sport pack. ⊕ USA			98024701	L95	
	Bos		2374381	[+] 23743 20.5	⊖ sport pack. ⊖ AMG sport pack. ⊕ USA	Ate		82062900		
			98024701	L95	right	Ate		82076400		
			98029400		left		PRO	92115503	ø 300 x 22 x 68	
	Bos		82039900				PRO	92115505	ø 300 x 22 x 68	
	Bre		82504800					91058800	ø 180 x 25	
	Bre		82518800		⊕ AUS ⊕ J ⊖ sport pack. ⊖ AMG sport pack.			97035400		
	Bos		82063800							
	Bos		82510100							
		PRO	92115203	ø 295 x 28 x 54.5	⊕ USA A970951→					
		PRO	92115205	ø 295 x 28 x 54.5	⊕ USA A970951→					
		PRO	92115303	ø 312 x 28 x 64.5	⊕ J ⊕ AUS ⊕ USA →A870951					
		PRO	92120203	ø 330 x 32 x 64.5	⊕ sport pack. ⊕ AMG sport pack.					
E 500 T (211.270) 10/03→07/09 407900 225 / 306	Bre		2374502	[o] 23745 17.7		Ate		2333403	[o] 23334 16.8	
	Bre		2374581	[o] 23745 17.7		Ate		2333481	[o] 23334 16.8	
			98024701	L95	right			98024701	L95	
			98029400		left	Ate		82062900		
	Bre		82504800			Ate		82076400		
	Bre		82518800		⊕ J ⊖ sport pack. ⊖ AMG sport pack.		PRO	92115503	ø 300 x 22 x 68	
		PRO	92115303	ø 312 x 28 x 64.5	⊕ AUS ⊕ J ⊕ USA		PRO	92115505	ø 300 x 22 x 68	
		PRO	92119903	ø 330 x 32 x 64.5				91058800	ø 180 x 25	
		PRO	92119905	ø 330 x 32 x 64.5				97035400		
		PRO	92120203	ø 330 x 32 x 64.5	⊕ sport pack. ⊕ AMG sport pack.					
E 500 T (211.272) 04/06→07/09 408000 285 / 388	Bre		2374502	[o] 23745 17.7	⊕ USA ⊕ J ⊕ AUS	Ate		2333403	[o] 23334 16.8	
	Bre		2374581	[o] 23745 17.7	⊕ USA ⊕ J ⊕ AUS	Ate		2333481	[o] 23334 16.8	
	Bre		2396001	[o] 23960 17.8	⊖ USA ⊖ J ⊖ AUS			98024701	L95	
	Bre		2396081	[o] 23960 17.8	⊖ USA ⊖ J ⊖ AUS	Ate		82062900		
			98024701	L95	⊕ J	Ate		82076400		

I - M

kW / hp

E-CLASS T-Model (S211) 03/03→07/09

408000														
E 500 T (211.272)	04/06→07/09	285 / 388		98036401	L98	⊖ J			PRO	92115503	ø 300 x 22 x 68	⊕ USA ⊕ AUS ⊕ sport pack. ⊕ AMG sport pack.
			Bre	82504000		⊖ USA ⊖ J ⊖ AUS			PRO	92115505	ø 300 x 22 x 68	⊕ USA ⊕ AUS ⊕ sport pack. ⊕ AMG sport pack.
			Bre	82504800		⊕ USA ⊕ J ⊕ AUS				91058800	ø 180 x 25	
				PRO 92119903	ø 330 x 32 x 64.5	⊕ J ⊕ USA ⊕ AUS				97035400		
				PRO 92119905	ø 330 x 32 x 64.5	⊕ J ⊕ USA ⊕ AUS						
				PRO 92120203	ø 330 x 32 x 64.5	⊕ J ⊕ AUS ⊕ sport pack. ⊕ AMG sport pack.						
408100												
E 500 T 4-matic (211.283)	10/03→07/09	225 / 306	Ate	2148401	[o] 21484 20.8	→X197477 →2005-10-24	Ate		2333403	[o] 23334 16.8		
			Ate	2392201	[o] 23922 21	X 197478→ 2005-10-24→	Ate	epad	2333481	[o] 23334 16.8		
			Ate	epad 2392281	[o] 23922 21	X 197478→ 2005-10-24→			98024701	L95		
				98040100	L95	left	Ate		82062900			
				98047200	L101	right	Ate		82076400			
			Ate	82059200				PRO	92115503	ø 300 x 22 x 68		
				92124100	ø 330 x 32 x 47.5	⊕ sport pack. ⊕ AMG sport pack.		PRO	92115505	ø 300 x 22 x 68		
				TPM0002					TPM0002			
									91058800	ø 180 x 25		
									97035400			
408200												
E 500 T 4-matic (211.290)	04/06→07/09	285 / 388	Ate	2392201	[o] 23922 21		Ate		2333403	[o] 23334 16.8		
			Ate	epad 2392281	[o] 23922 21		Ate	epad	2333481	[o] 23334 16.8		
				98024701	L95	⊕ J			98024701	L95		
				98040100	L95	⊖ J	Ate		82062900			
			Ate	82059200			Ate		82076400			
				92124100	ø 330 x 32 x 47.5	⊕ sport pack. ⊕ AMG sport pack.		PRO	92115503	ø 300 x 22 x 68		
				TPM0002				PRO	92115505	ø 300 x 22 x 68		
									TPM0002			
									91058800	ø 180 x 25		
									97035400			
408300												
E 55 T AMG Kompressor (211.276)	07/03→07/09	350 / 476	Bre	2394301	[o] 23943 17.5		Bre		2347801	[o] 23478 16.5		
				98024701	L95	right			98024701	L95		
				98029400		left			92120000	ø 330 x 26 x 68.3		
				PRO 92120303	ø 360 x 36 x 64.5				91058800	ø 180 x 25		
				PRO 92120305	ø 360 x 36 x 64.5				97035400			
408400												
E 63 AMG (211.277)	03/06→07/09	378 / 514		98036401	L98		Bre		2447301	[–] 24473 14.8		
									98036401	L98		
									92120000	ø 330 x 26 x 68.3		
									91058800	ø 180 x 25		
									97035400			

E-CLASS T-Model (S212) 08/09→

408500												
E 200 (212.234)	11/12→	135 / 184	Luc	2430603	[o] 24306 20.6	⊖ AMG sport pack. ⊖ sport pack.	Ate		2333403	[o] 23334 16.8		
			Luc	2431001	[o] 24310 19.4	⊕ AMG sport pack. ⊕ sport pack.	Ate	epad	2333481	[o] 23334 16.8		
			Luc	epad 2431081	[o] 24310 19.4	⊕ AMG sport pack. ⊕ sport pack.			98024701	L95		

kW / hp

E-CLASS T-Model (S212) 08/09→

408500															
E 200 (212.234)	11/12→	135 / 184			98024701	L95			Ate		82518400				
			Luc		82518300					PRO	92115503	ø 300 x 22 x 68	⊕ reinf.brake		
				PRO	92163203	ø 295 x 28 x 64.5				PRO	92115505	ø 300 x 22 x 68	⊕ reinf.brake		
				PRO	92163403	ø 322 x 32 x 64.5	⊕ AMG sport pack. ⊕ sport pack.				TPM0002				
					TPM0002						91069100	ø 180 x 25			
408600															
E 200 CDI / BlueTEC	11/09→	100 / 136	Luc		2430601	[o] 24306 20.6	⊖ AMG sport pack. ⊖ sport pack. ⊕ police veh.		Ate		2333403	[o] 23334 16.8			
(212.205, 212.206)			Luc		2430603	[o] 24306 20.6	⊖ sport pack. ⊖ AMG sport pack.		Ate	epad	2333481	[o] 23334 16.8			
			Luc	epad	2430681	[o] 24306 20.6	⊖ AMG sport pack. ⊖ sport pack. ⊕ police veh.				98024701	L95			
			Luc		2431001	[o] 24310 19.4	⊕ sport pack. ⊕ AMG sport pack.		Ate		82062900				
			Luc	epad	2431081	[o] 24310 19.4	⊕ sport pack. ⊕ AMG sport pack.		Ate		82518400				
					98024701	L95				PRO	92115403	ø 300 x 10 x 68.5			
			Luc		82073300		⊖ sport pack. ⊖ AMG sport pack.			PRO	92115405	ø 300 x 10 x 68.5			
				PRO	92163203	ø 295 x 28 x 64.5	⊖ sport pack. ⊖ AMG sport pack.				TPM0002				
				PRO	92163403	ø 322 x 32 x 64.5	⊕ sport pack. ⊕ AMG sport pack.				91069100	ø 180 x 25			
					TPM0002										
408700															
E 200 CGI (212.248)	11/09→	135 / 184	Luc		2430603	[o] 24306 20.6	⊖ sport pack. ⊖ AMG sport pack.		Ate		2333403	[o] 23334 16.8			
E 220 CDI / BlueTEC	11/09→	125 / 170	Luc		2431001	[o] 24310 19.4	⊕ sport pack. ⊕ AMG sport pack.		Ate	epad	2333481	[o] 23334 16.8			
(212.202, 212.201)			Luc	epad	2431081	[o] 24310 19.4	⊕ sport pack. ⊕ AMG sport pack.				98024701	L95			
					98024701	L95			Ate		82062900				
			Luc		82073300		⊖ sport pack. ⊖ AMG sport pack.		Ate		82518400				
				PRO	92163203	ø 295 x 28 x 64.5	⊖ sport pack. ⊖ AMG sport pack.			PRO	92115403	ø 300 x 10 x 68.5			
				PRO	92163403	ø 322 x 32 x 64.5	⊕ sport pack. ⊕ AMG sport pack.			PRO	92115405	ø 300 x 10 x 68.5			
					TPM0002						TPM0002				
											91069100	ø 180 x 25			
408800															
E 220 CDI (212.202)	08/09→	120 / 163	Luc		2430603	[o] 24306 20.6	⊖ AMG sport pack.		Ate		2333403	[o] 23334 16.8			
			Luc		2431001	[o] 24310 19.4	⊕ AMG sport pack.		Ate	epad	2333481	[o] 23334 16.8			
			Luc	epad	2431081	[o] 24310 19.4	⊕ AMG sport pack.				98024701	L95			
					98024701	L95			Ate		82518400				
			Luc		82518300					PRO	92115403	ø 300 x 10 x 68.5			
				PRO	92163203	ø 295 x 28 x 64.5	⊖ AMG sport pack.			PRO	92115405	ø 300 x 10 x 68.5			
				PRO	92163403	ø 322 x 32 x 64.5	⊕ AMG sport pack.				TPM0002				
					TPM0002						91069100	ø 180 x 25			
408900															
E 250 (212.236)	11/12→	155 / 211	Luc		2431001	[o] 24310 19.4	⊕ AMG sport pack. ⊕ sport pack.		Ate		2333403	[o] 23334 16.8	⊕ reinf.brake		
			Luc	epad	2431081	[o] 24310 19.4	⊕ AMG sport pack. ⊕ sport pack.		Ate	epad	2333481	[o] 23334 16.8	⊕ reinf.brake		
					98024701	L95					98024701	L95			
			Luc		82518300		⊕ AMG sport pack. ⊕ sport pack.		Ate		82518400		⊕ reinf.brake		
				PRO	92163203	ø 295 x 28 x 64.5				PRO	92115503	ø 300 x 22 x 68	⊕ reinf.brake		
				PRO	92163403	ø 322 x 32 x 64.5	⊕ AMG sport pack. ⊕ sport pack.			PRO	92115505	ø 300 x 22 x 68	⊕ reinf.brake		
					TPM0002						TPM0002				
											91069100	ø 180 x 25			

I - M

		kW / hp												
E-CLASS T-Model (S212) 08/09→														
		409000	Luc		2431001	[o] 24310 19.4			Ate		2333403	[o] 23334 16.8	
E 250 CDI / BlueTEC (212.203, 212.204)	11/09→	150 / 204											
E 250 CGI (212.247)	11/09→	150 / 204	Luc	epad	2431081	[o] 24310 19.4			Ate	epad	2333481	[o] 23334 16.8	
					98024701	L95					98024701	L95	
					92163500	ø 322 x 32 x 64.5	⊖ sport pack. ⊖ AMG sport pack.		Ate		82062900		
				PRO	92163503	ø 322 x 32 x 64.5	⊖ sport pack. ⊖ AMG sport pack.		Ate		82518400		
				PRO	92163403	ø 322 x 32 x 64.5	⊕ sport pack. ⊕ AMG sport pack.			PRO	92115403	ø 300 x 10 x 68.5	
					TPM0002					PRO	92115405	ø 300 x 10 x 68.5	
											TPM0002		
											91069100	ø 180 x 25	
		409100	Luc		2431001	[o] 24310 19.4			Ate		2333403	[o] 23334 16.8	
E 250 CDI / BlueTEC 4-matic (212.282, 212.297)	07/10→	150 / 204											
			Luc	epad	2431081	[o] 24310 19.4			Ate	epad	2333481	[o] 23334 16.8	
					98024701	L95					98024701	L95	
					92163500	ø 322 x 32 x 64.5	A001285→		Ate		82062900		
				PRO	92163503	ø 322 x 32 x 64.5	A001285→		Ate		82518400		
				PRO	92163403	ø 322 x 32 x 64.5	⊕ sport pack. ⊕ AMG sport pack.			PRO	92115403	ø 300 x 10 x 68.5	A007599→
					TPM0002					PRO	92115405	ø 300 x 10 x 68.5	A007599→
											TPM0002		
											91069100	ø 180 x 25	
		409200	Luc		2431001	[o] 24310 19.4	⊕ AMG sport pack. ⊕ sport pack.		Ate		2333403	[o] 23334 16.8	
E 300	11/09→	170 / 231											
			Luc	epad	2431081	[o] 24310 19.4	⊕ AMG sport pack. ⊕ sport pack.		Ate	epad	2333481	[o] 23334 16.8	
					98024701	L95					98024701	L95	
			Luc		82518300		⊕ AMG sport pack. ⊕ sport pack.		Ate		82518400		⊕ USA
					92163500	ø 322 x 32 x 64.5				PRO	92115503	ø 300 x 22 x 68	
				PRO	92163503	ø 322 x 32 x 64.5				PRO	92115505	ø 300 x 22 x 68	
				PRO	92163403	ø 322 x 32 x 64.5	⊕ AMG sport pack. ⊕ sport pack.				TPM0002		
					TPM0002						91069100	ø 180 x 25	
		409300	Luc		2431001	[o] 24310 19.4			Ate		2333403	[o] 23334 16.8	
E 300 (212.255)	07/11→	185 / 252											
E 300 4-matic (212.280)	07/11→	185 / 252	Luc	epad	2431081	[o] 24310 19.4			Ate	epad	2333481	[o] 23334 16.8	
					98024701	L95					98024701	L95	
			Luc		82518300				Ate		82062900		
					92163500	ø 322 x 32 x 64.5	⊖ AMG sport pack. ⊖ sport pack.		Ate		82518400		
				PRO	92163503	ø 322 x 32 x 64.5	⊖ AMG sport pack. ⊖ sport pack.			PRO	92115503	ø 300 x 22 x 68	
				PRO	92163403	ø 322 x 32 x 64.5	⊕ AMG sport pack. ⊕ sport pack. ⊕ USA			PRO	92115505	ø 300 x 22 x 68	
					TPM0002						TPM0002		
											91069100	ø 180 x 25	
		409400	Luc		2431001	[o] 24310 19.4			Ate		2333403	[o] 23334 16.8	
E 300 CDI / BlueTEC (212.227)	11/09→	170 / 231											
E 300 CDI (212.220)	03/11→	150 / 204	Luc	epad	2431081	[o] 24310 19.4			Ate	epad	2333481	[o] 23334 16.8	
E 300 Hybrid / BlueTEC Hybrid (212.298)	12/11→	150 / 204			98024701	L95					98024701	L95	
E 350 (212.256)	08/09→	200 / 272											
E 350 (212.259)	09/11→	225 / 306	Luc		82518300				Ate		82062900		
E 350 4-matic (212.287)	11/09→	200 / 272											
E 350 4-matic (212.288, 212.287)	09/11→	225 / 306			92163500	ø 322 x 32 x 64.5	⊖ AMG sport pack. ⊖ sport pack.		Ate		82518400		
E 350 BlueTEC (212.224)	11/09→	155 / 211											
E 350 BlueTEC (212.226)	07/14→	190 / 258											

E-CLASS T-Model (S212) 08/09→

		kW / hp												
E 350 CDI (212.223)	07/11→	195 / 265		PRO	92163503	ø 322 x 32 x 64.5	⊖ AMG sport pack. ⊖ sport pack.		PRO	92115503	ø 300 x 22 x 68	
E 350 CDI (212.225)	11/09→	170 / 231		PRO	92163403	ø 322 x 32 x 64.5	⊕ AMG sport pack. ⊕ sport pack.		PRO	92115505	ø 300 x 22 x 68	
E 350 CDI 4-matic (212.289)	11/09→	170 / 231			TPM0002					TPM0002		
E 350 CDI 4-matic (212.293)	07/11→	195 / 265								91069100	ø 180 x 25	
E 350 CGI (212.257)	11/09→	215 / 292										
		409500	Luc		2431001	[o] 24310 19.4	⊕ AMG sport pack. ⊕ sport pack.	Ate		2333403	[o] 23334 16.8	⊕ USA
E 350 BlueTEC	11/12→	185 / 252	Luc	epad	2431081	[o] 24310 19.4	⊕ AMG sport pack. ⊕ sport pack.	Ate	epad	2333481	[o] 23334 16.8	⊕ USA
			Bre		2497601	[o] 24976 17.5	⊕ HD ⊕ reinf.brake			98024701	L95	
					98024701	L95		Ate		82518400		⊕ USA
			Bre		82504000		⊕ HD ⊕ reinf.brake		PRO	92115503	ø 300 x 22 x 68	
			Luc		82518300		⊕ AMG sport pack. ⊕ sport pack.		PRO	92115505	ø 300 x 22 x 68	
					92163500	ø 322 x 32 x 64.5				TPM0002		
				PRO	92163503	ø 322 x 32 x 64.5				91069100	ø 180 x 25	
				PRO	92163403	ø 322 x 32 x 64.5	⊕ AMG sport pack. ⊕ sport pack.					
					TPM0002							
		409600	Luc		2431001	[o] 24310 19.4	⊕ AMG sport pack. ⊕ sport pack.	Ate		2333403	[o] 23334 16.8	
E 350 BlueTEC 4-matic	11/12→	185 / 252	Luc	epad	2431081	[o] 24310 19.4	⊕ AMG sport pack. ⊕ sport pack.	Ate	epad	2333481	[o] 23334 16.8	
			Bre		2497601	[o] 24976 17.5	⊕ AMG sport pack. ⊕ sport pack. ⊕ USA			98024701	L95	
					98024701	L95		Luc		82518300		⊕ AMG sport pack. ⊕ sport pack.
			Bre		82504000		⊕ AMG sport pack. ⊕ sport pack.	Ate		82518400		⊕ USA
					92163500	ø 322 x 32 x 64.5	⊖ AMG sport pack. ⊖ sport pack.		PRO	92115503	ø 300 x 22 x 68	
				PRO	92163503	ø 322 x 32 x 64.5	⊖ AMG sport pack. ⊖ sport pack.		PRO	92115505	ø 300 x 22 x 68	
				PRO	92163403	ø 322 x 32 x 64.5	⊕ AMG sport pack. ⊕ sport pack.			TPM0002		
					TPM0002					91069100	ø 180 x 25	
		409700			98024701	L95		Ate		2333403	[o] 23334 16.8	⊕ Binz vehicle
E 350 BlueTEC 4-matic (212.294)	07/14→	190 / 258	Bre		82504000		⊕ AMG sport pack. ⊕ sport pack.	Ate	epad	2333481	[o] 23334 16.8	⊕ Binz vehicle
					92163500	ø 322 x 32 x 64.5				98024701	L95	
				PRO	92163503	ø 322 x 32 x 64.5			PRO	92115503	ø 300 x 22 x 68	
					TPM0002				PRO	92115505	ø 300 x 22 x 68	
										TPM0002		
										91069100	ø 180 x 25	
		409800	Bre		2497601	[o] 24976 17.5		Ate		2333403	[o] 23334 16.8	
E 400	01/13→	245 / 333			98024701	L95		Ate	epad	2333481	[o] 23334 16.8	
E 400 (212.261)	07/14→	245 / 333	Bre		82504000					98024701	L95	
E 400 4-matic	01/13→	245 / 333			TPM0002			Ate		82518400		
E 400 4-matic (212.299)	07/14→	245 / 333							PRO	92115503	ø 300 x 22 x 68	
									PRO	92115505	ø 300 x 22 x 68	
										TPM0002		
										91069100	ø 180 x 25	
		409900	Bre		2497601	[o] 24976 17.5		Ate		2333403	[o] 23334 16.8	
E 500 (212.272)	11/09→	285 / 388			98024701	L95		Ate	epad	2333481	[o] 23334 16.8	

I - M

		kW / hp											
E-CLASS T-Model (S212) 08/09→													
		409900	Bre		82504000					98024701	L95	
E 500 (212.272)	11/09→	285 / 388			TPM0002			Ate		82062900		
								Ate		82518400		
										TPM0002		
										91069100	ø 180 x 25	
		410000	Bre		2521901	[o] 25219 17.8	⊖ USA	Ate		2333403	[o] 23334 16.8	
E 500 (212.273)	09/11→	300 / 408	Bre		2521902	[o] 25219 17.8	⊕ USA	Ate	epad	2333481	[o] 23334 16.8	
E 500 4-matic (212.291)	09/11→	300 / 408			98024701	L95				98024701	L95	
					TPM0002			Ate		82062900		
								Ate		82518400		
										TPM0002		
										91069100	ø 180 x 25	
		410100			98036401	L98		Bre		2473301	[o] 24733 15.3	
E 63 AMG (212.274)	02/11→	386 / 525										
E 63 AMG (212.274)	02/11→	410 / 558			TPM0002					98036401	L98	
E 63 AMG (212.275)	02/13→	430 / 585								TPM0002		
E 63 AMG (212.277)	08/09→	386 / 525								91069100	ø 180 x 25	
E 63 AMG 4-matic (212.292)	02/11→	410 / 558										
		410200			98036401	L98		Bre		2473301	[o] 24733 15.3	⊖ ceramic brake
E 63 AMG 4-matic (212.276)	02/13→	430 / 585			TPM0002					98036401	L98	
										TPM0002		
										91069100	ø 180 x 25	
E-KLASSE (W210) 06/95→03/02 → E-CLASS (W210), Page 617													
E-KLASSE (W211) 03/02→03/09 → E-CLASS (W211), Page 619													
E-KLASSE (W212) 01/09→ → E-CLASS (W212), Page 627													
E-KLASSE Cabriolet (A207) 01/10→ → E-CLASS Convertible (A207), Page 633													
E-KLASSE Coupe (C207) 01/09→ → E-CLASS Coupe (C207), Page 638													
E-KLASSE Kombi (S210) 06/96→03/03 → E-CLASS Estate (S210), Page 641													
E-KLASSE Kombi (S211) 03/03→07/09 → E-CLASS T-Model (S211), Page 644													
E-KLASSE Kombi (S212) 08/09→ → E-CLASS T-Model (S212), Page 650													
G-CLASS (W461) 02/90→													
		410300	Per		2078401	[o] 20784 18		Per		1302001	[o] 13020 7.8	260 x 54 -brake
230 GE (461.238, 461.239)	02/93→	90 / 122			98020900	L265	H000248→	Per		1302002	[o] 13020 8.7	260 x 54 -brake
230 GE (461)	06/93→	92 / 125			98021302	L90	⊕ 1 plug →H000247			94002600	ø 260,0 x 64	260 x 54 -brake
250 GD (461)	02/90→	68 / 92	Per		82017000							
290 GD/G 290 D (461.337, 461.338)	04/92→	70 / 95			92020300	ø 303 x 16 x 83						
					92113400	ø 315 x 30 x 83	→axle R163399					
		410400	Per		2078401	[o] 20784 18		Bos		2302101	[o] 23021 18.9	⊕ rear disc brake Bosch
G 280 CDI	04/09→	135 / 184			98020900	L265	H000248→			98018200	L210	
G 290 TD (461.335, 461.336)	07/97→	88 / 120			98021302	L90	⊕ 1 plug →H000247	Bos		82061400		⊕ rear disc brake
G 300 CDI	04/10→	135 / 184	Per		82017000			Per		1302001	[o] 13020 7.8	⊕ rear drum brake 260 x 54 -brake
					92020300	ø 303 x 16 x 83		Per		1302002	[o] 13020 8.7	⊕ rear drum brake 260 x 54 -brake
					92113400	ø 315 x 30 x 83	→axle R163399		PRO	92137603	ø 272 x 16 x 96.7	⊕ rear disc brake
										94002600	ø 260,0 x 64	⊕ rear drum brake 260 x 54 -brake

30 kW / hp

G-CLASS (W463) 09/89→12/11

410500													
250 GD (463.324, 463.325)	06/90→	69 / 94	Per		2078401	[o] 20784 18		Per		1302001	[o] 13020 7.8	260 x 54 -brake
300 GE (463.227, 463.228)	06/90→	125 / 170			98020900	L265		Per		1302002	[o] 13020 8.7	260 x 54 -brake
300 GE (463.227, 463.228)	06/90→	128 / 174	Per		82017000					94002600	ø 260,0 x 64	260 x 54 -brake
					92020300	ø 303 x 16 x 83						
410600													
300 GD (463.327, 463.328)	09/89→	83 / 113	Per		2078401	[o] 20784 18		Per		1302001	[o] 13020 7.8	260 x 54 -brake
					98020900	L265	H000248→	Per		1302002	[o] 13020 8.7	260 x 54 -brake
					98021302	L90	⊕ 1 plug →H000247			94002600	ø 260,0 x 64	260 x 54 -brake
			Per		82017000							
					92020300	ø 303 x 16 x 83	→R163868					
					92113400	ø 315 x 30 x 83	→axle R163399					
410700													
350 Turbo GD (463.320, 463.321)	09/91→	100 / 136	Per		2078401	[o] 20784 18		Bos		2302101	[o] 23021 18.9	⊕ rear disc brake Bosch
G 270 CDI (463.322, 463.323)	10/01→	115 / 156			98020900	L265	H000248→			98018200	L210	
G 300 TD (463.330, 463.331)	08/96→	130 / 177			98021302	L90	⊕ 1 plug →H000247	Bos		82061400		⊕ rear disc brake Ø 272 mm
G 320 (463.232, 463.233, 463.244, 463.245)	07/97→	158 / 215	Per		82017000			Bos		82508600		⊕ rear disc brake Ø 258 mm
					92020300	ø 303 x 16 x 83		Per		1302001	[o] 13020 7.8	⊕ rear drum brake 260 x 54 -brake
					92113400	ø 315 x 30 x 83	→axle R163399	Per		1302002	[o] 13020 8.7	⊕ rear drum brake 260 x 54 -brake
									PRO	92137503	ø 258 x 12 x 96.5	⊕ rear disc brake
									PRO	92137603	ø 272 x 16 x 96.7	⊕ rear disc brake
										94002600	ø 260,0 x 64	⊕ rear drum brake 260 x 54 -brake
										91055100	ø 160 x 40	⊕ rear disc brake
										97012300		⊕ rear disc brake
410800													
G 320 CDI (463.340, 463.341, 463.343)	09/06→	165 / 224	Per		2078401	[o] 20784 18		Bos		2302101	[o] 23021 18.9	
					98020900	L265	H000248→			98018200	L210	
					98021302	L90	⊕ 1 plug →H000247	Bos		82061400		
			Per		82017000				PRO	92137603	ø 272 x 16 x 96.7	
					92020300	ø 303 x 16 x 83				91055100	ø 160 x 40	
					92113400	ø 315 x 30 x 83	→axle R163399			97012300		
410900													
G 350 CDI	07/11→	155 / 211	Per		2078401	[o] 20784 18		Bos		2302101	[o] 23021 18.9	Bosch
G 400 CDI (463.332, 463.333)	12/00→	184 / 250	Per		82017000					98018200	L210	
					92113400	ø 315 x 30 x 83	→axle R163399	Bos		82061400		
									PRO	92137603	ø 272 x 16 x 96.7	
										91055100	ø 160 x 40	
										97012300		
411000													
G 36 AMG (463.230)	01/95→	200 / 272	Per		2078401	[o] 20784 18		Bos		2302101	[o] 23021 18.9	⊕ rear disc brake Bosch
			Per		82017000					98018200	L210	⊕ rear disc brake
					92113400	ø 315 x 30 x 83	→axle R163399	Bos		82061400		⊕ rear disc brake Ø 272 mm
								Bos		82508600		⊕ rear disc brake Ø 258 mm
								Per		1302001	[o] 13020 7.8	⊕ rear drum brake
								Per		1302002	[o] 13020 8.7	⊕ rear drum brake
									PRO	92137503	ø 258 x 12 x 96.5	⊕ rear disc brake

I - M

kW / hp

G-CLASS (W463) 09/89→12/11

411000														
G 36 AMG (463.230)	01/95→	200 / 272								PRO	92137603	ø 272 x 16 x 96.7	⊕ rear disc brake
											94002600	ø 260,0 x 64	⊕ rear drum brake
											91055100	ø 160 x 40	⊕ rear disc brake
											97012300		⊕ rear disc brake
411100			Per		2078401	[o] 20784 18			Bos		2302101	[o] 23021 18.9	Bosch
G 500 (463.247, 463.248, 463.249, 463.240, 463.421)	04/98→	218 / 296	Per		82017000						98018200	L210	
G 500 E (463.228)	09/93→	177 / 241			92113400	ø 315 x 30 x 83	→axle R163399		Bos		82061400		Ø 272 mm
									Bos		82508600		Ø 258 mm
										PRO	92137503	ø 258 x 12 x 96.5	
										PRO	92137603	ø 272 x 16 x 96.7	
											91055100	ø 160 x 40	⊕ rear disc brake
											97012300		⊕ rear disc brake
411200			Per		2078401	[o] 20784 18			Bos		2302101	[o] 23021 18.9	
G 500 4-matic	05/08→	285 / 388			98020900	L265					98018200	L210	
					98027102	L147			Bos		82508600		
					92113400	ø 315 x 30 x 83	→axle R163399			PRO	92137603	ø 272 x 16 x 96.7	
											91055100	ø 160 x 40	
411300			Per		2078401	[o] 20784 18					98018200	L210	
G 550 4-matic	09/09→12/11	289 / 393			98020900	L265				PRO	92137603	ø 272 x 16 x 96.7	
					98027102	L147					91055100	ø 160 x 40	
					92113400	ø 315 x 30 x 83	→axle R163399						
411400			Per		2078401	[o] 20784 18			Bos		2302101	[o] 23021 18.9	Bosch
G 55 AMG (463.243, 463.246)	04/99→	260 / 354	Per		82017000						98018200	L210	
					92113400	ø 315 x 30 x 83	→axle R163399		Bos		82061400		
										PRO	92137603	ø 272 x 16 x 96.7	
											91055100	ø 160 x 40	⊕ rear disc brake
											97012300		⊕ rear disc brake
411500			Per		2078401	[o] 20784 18	→144225		Bos		2302101	[o] 23021 18.9	→144225
G 55 AMG (463.270, 463.271)	06/04→	350 / 476	Ate		2392201	[o] 23922 21	144226→		Ate		2392301	[o] 23923 18	144226→
G 55 AMG (463.270, 463.271)	08/06→	368 / 500	Ate	epad	2392281	[o] 23922 21	144226→		Ate	epad	2392381	[o] 23923 18	144226→
G 55 AMG (463.270, 463.271)	08/08→	373 / 507											
G 63 AMG	05/12→	400 / 544	Per		82017000		→144225				98018200	L210	→144225
			Ate		82059200		144226→				98040100	L95	144226→ 2x
					92113400	ø 315 x 30 x 83	→axle R163399		Bos		82061400		→144225
									Ate		82062900		144226→
									Ate		82076400		144226→
										PRO	92137603	ø 272 x 16 x 96.7	→144226
											91055100	ø 160 x 40	
											97012300		
411600			Per		2078401	[o] 20784 18			Ate		2392301	[o] 23923 18	
G 65 AMG	05/12→	450 / 612			98027102	L147			Ate	epad	2392381	[o] 23923 18	

		kW / hp										
G-CLASS (W463) 09/89→12/11												
411600				98036400	L98				98040100	L95		
G 65 AMG	05/12→	450 / 612		92113400	ø 315 x 30 x 83	→axle R163399	Ate		82076400			
									91055100	ø 160 x 40		
G-CLASS Cabrio (W463) 09/96→												
411700			Per	2078401	[o] 20784 18		Bos		2302101	[o] 23021 18.9	⊕ rear disc brake Bosch	
G 300 TD (463.308)	09/96→	130 / 177		98020900	L265	H000248→			98018200	L210		
G 320 (463.209)	11/97→	158 / 215		98021302	L90	⊕ 1 plug →H000247	Bos		82061400		⊕ rear disc brake Ø 272 mm	
G 320 CDI	09/06→	165 / 224	Per	82017000			Bos		82508600		⊕ rear disc brake Ø 258 mm	
				92020300	ø 303 x 16 x 83		Per		1302001	[o] 13020 7.8	⊕ rear drum brake 260 x 54 -brake	
				92113400	ø 315 x 30 x 83	→axle R163399	Per		1302002	[o] 13020 8.7	⊕ rear drum brake 260 x 54 -brake	
								PRO	92137503	ø 258 x 12 x 96.5	⊕ rear disc brake	
								PRO	92137603	ø 272 x 16 x 96.7	⊕ rear disc brake	
									94002600	ø 260,0 x 64	⊕ rear drum brake 260 x 54 -brake	
411800			Per	2078401	[o] 20784 18		Bos		2302101	[o] 23021 18.9	Bosch	
G 350 CDI	07/11→	155 / 211	Per	82017000					98018200	L210		
G 400 CDI (463.309)	12/00→	184 / 250		92113400	ø 315 x 30 x 83	→axle R163399	Bos		82061400			
								PRO	92137603	ø 272 x 16 x 96.7		
									91055100	ø 160 x 40		
									97012300			
411900			Per	2078401	[o] 20784 18		Bos		2302101	[o] 23021 18.9		
G 500	12/09→	285 / 388		92113400	ø 315 x 30 x 83	→axle R163399			98018200	L210		
							Bos		82061400			
							Bos		82508600			
								PRO	92137603	ø 272 x 16 x 96.7		
									91055100	ø 160 x 40		
									97012300			
412000			Per	2078401	[o] 20784 18		Bos		2302101	[o] 23021 18.9	Bosch	
G 500 (463)	04/98→	218 / 296	Per	82017000					98018200	L210		
							Bos		82061400		Ø 272 mm	
							Bos		82508600		Ø 258 mm	
								PRO	92137503	ø 258 x 12 x 96.5		
								PRO	92137603	ø 272 x 16 x 96.7		
G-KLASSE (W461) 02/90→ → G-CLASS (W461), Page 654												
G-KLASSE (W463) 09/89→12/11 → G-CLASS (W463), Page 655												
G-KLASSE Geländewagen offen (W463) 09/96→ → G-CLASS Cabrio (W463), Page 657												
GLA-CLASS (X156) 12/13→												
412100			TRW	2486901	[o] 24869 19		TRW		2484801	[o] 24848 18.4		
GLA 180 CDI (156.912)	07/14→	80 / 109		98048700	L93			PRO	92254903	ø 295 x 10 x 42.7		
				PRO 92241603	ø 295 x 28 x 51.1	⊖ AMG sport pack. ⊖ sport pack.			TPM0002			
				PRO 92257503	ø 295 x 28 x 51.2	⊕ AMG sport pack. ⊕ sport pack.						
				TPM0002								

		kW / hp										
GLA-CLASS (X156) 12/13→												
412200			TRW		**2486901**	[o] 24869 19	⊖ sport pack.	TRW		**2484801**	[o] 24848 18.4	
GLA 200 (156.943)	12/13→	115 / 156			**98048700**	L93			PRO	**92254903**	ø 295 x 10 x 42.7	
				PRO	**92241603**	ø 295 x 28 x 51.1	⊖ sport pack. ⊖ AMG sport pack.			**TPM0002**		
				PRO	**92257503**	ø 295 x 28 x 51.2	⊕ sport pack. ⊕ AMG sport pack.					
					TPM0002							
412300			TRW		**2486901**	[o] 24869 19		TRW		**2484801**	[o] 24848 18.4	
GLA 200 CDI (156.908)	12/13→	100 / 136			**98048700**	L93			PRO	**92254903**	ø 295 x 10 x 42.7	
				PRO	**92254803**	ø 295 x 28 x 51.1	⊖ AMG sport pack. ⊖ sport pack.			**TPM0002**		
				PRO	**92257503**	ø 295 x 28 x 51.2	⊕ AMG sport pack.					
					TPM0002							
412400			TRW		**2486901**	[o] 24869 19				**98048700**	L93	
GLA 200 CDI 4-matic (156.902)	12/13→	100 / 136		PRO	**92254803**	ø 295 x 28 x 51.1	⊖ sport pack. ⊖ AMG sport pack.		PRO	**92254903**	ø 295 x 10 x 42.7	
				PRO	**92257503**	ø 295 x 28 x 51.2	⊕ sport pack. ⊕ AMG sport pack.			**TPM0002**		
					TPM0002							
412500			TRW		**2486901**	[o] 24869 19			PRO	**92254903**	ø 295 x 10 x 42.7	
GLA 220 CDI (156.903)	12/13→	120 / 163			**98048700**	L93				**TPM0002**		
GLA 220 CDI (156.903)	12/13→	125 / 170		PRO	**92254803**	ø 295 x 28 x 51.1	⊕ AMG sport pack. ⊕ sport pack.					
				PRO	**92262103**	ø 320 x 30 x 51	⊖ AMG sport pack. ⊖ sport pack.					
					TPM0002							
412600			TRW		**2486901**	[o] 24869 19		TRW		**2484801**	[o] 24848 18.4	
GLA 220 CDI 4-matic (156.905)	12/13→	120 / 163			**98048700**	L93			PRO	**92254903**	ø 295 x 10 x 42.7	
GLA 220 CDI 4-matic (156.905)	12/13→	125 / 170		PRO	**92254803**	ø 295 x 28 x 51.1				**TPM0002**		
					TPM0002							
412700					**98048700**	L93				**TPM0002**		
GLA 250 (156.944)	12/13→	155 / 211										
GLA 250 4-matic (156.946)	12/13→	155 / 211			**TPM0002**							
412800					**98048700**	L93		TRW		**2521501**	[o] 25215 18.7	
GLA 45 AMG 4-matic (156.952)	05/14→	265 / 360	Bre		**82504000**					**TPM0002**		
					TPM0002							
GLA-KLASSE (X156) 12/13→ → GLA-CLASS (X156), Page 657												
GL-CLASS (X164) 09/06→12/10												
412900			Ate		**2392201**	[o] 23922 21	⊖ rim size 19"	Ate		**2392302**	[o] 23923 18	⊖ USA
GL 320 CDI / 350 BlueTEC 4-matic (164.824, 164.825)	12/09→	155 / 211	Ate	epad	**2392281**	[o] 23922 21	⊖ rim size 19"	Ate	epad	**2392381**	[o] 23923 18	⊖ USA
			Ate		**2415101**	[o] 24151 20.3	⊕ rim size 19"			**98040100**	L95	right →A 409082
					98040100	L95	right →A 409082	Ate		**82076400**		
			Ate		**82059200**				PRO	**92150903**	ø 330 x 22 x 62.8	
				PRO	**92150703**	ø 350 x 32 x 54.7				**TPM0002**		
				PRO	**92150705**	ø 350 x 32 x 54.7				**91062400**	ø 210 x 30	
				PRO	**92176603**	ø 375 x 32 x 54.5	⊕ rim size 19"					
					TPM0002							
413000			Ate		**2392201**	[o] 23922 21		Ate		**2392302**	[o] 23923 18	
GL 320 CDI 4-matic	09/06→12/08	160 / 218										
GL 350 CDI 4-matic	09/09→12/10	170 / 231										

GL-CLASS (X164) 09/06→12/10

		kW / hp												
413000			Ate		2392281	[o] 23922 21		Ate		2392381	[o] 23923 18	
GL 320 CDI 4-matic	09/06→12/08	160 / 218										
GL 350 CDI 4-matic	09/09→12/10	170 / 231	Ate		2415101	[o] 24151 20.3	⊕ HD Brakes			98040100	L95	
					98040100	L95		Ate		82076400		
				PRO	92150703	ø 350 x 32 x 54.7	→A550332 →2009-09-02		PRO	92150903	ø 330 x 22 x 62.8	
				PRO	92150705	ø 350 x 32 x 54.7	→A550332 →2009-09-02			TPM0002		
				PRO	92176603	ø 375 x 32 x 54.5	⊕ HD brakes			91062400	ø 210 x 30	
					TPM0002					97032200		
413100			Ate		2392201	[o] 23922 21	⊖ HD Brakes	Ate		2392302	[o] 23923 18	⊖ USA
GL 320 CDI 4-matic (164.822)	09/06→05/09	165 / 224										
GL 350 CDI 4-matic (164.822)	05/09→	165 / 224	Ate		2392281	[o] 23922 21	⊖ HD Brakes	Ate		2392381	[o] 23923 18	⊖ USA
			Ate		2415101	[o] 24151 20.3	⊕ HD Brakes			98040100	L95	right
					98040100	L95	right	Ate		82062900		
			Ate		82059200			Ate		82076400		
			Ate		82062900				PRO	92150903	ø 330 x 22 x 62.8	
				PRO	92150703	ø 350 x 32 x 54.7	⊖ HD Brakes			TPM0002		
				PRO	92150705	ø 350 x 32 x 54.7	⊖ HD Brakes			91062400	ø 210 x 30	
				PRO	92176603	ø 375 x 32 x 54.5	⊕ HD Brakes					
					TPM0002							
413200			Ate		2392201	[o] 23922 21		Ate		2392302	[o] 23923 18	
GL 350 CDI 4-matic (164.823)	10/10→	195 / 265										
			Ate		2392281	[o] 23922 21		Ate		2392381	[o] 23923 18	
			Ate		2415101	[o] 24151 20.3	⊕ reinf.brake			98040100	L95	
					98040100	L95		Ate		82076400		
				PRO	92150703	ø 350 x 32 x 54.7	A550333→		PRO	92150903	ø 330 x 22 x 62.8	
				PRO	92150705	ø 350 x 32 x 54.7	A550333→			TPM0002		
				PRO	92176603	ø 375 x 32 x 54.5	⊕ reinf.brake			91062400	ø 210 x 30	
					TPM0002							
413300			Ate		2415101	[o] 24151 20.3		Ate		2392302	[o] 23923 18	
GL 420 CDI 4-matic (164.828)	09/06→05/09	225 / 306										
GL 450 CDI 4-matic (164.828)	05/09→	225 / 306			98040100	L95	right	Ate		2392381	[o] 23923 18	
			Ate		82059200					98040100	L95	right
			Ate		82062900			Ate		82062900		
				PRO	92176603	ø 375 x 32 x 54.5		Ate		82076400		
					TPM0002				PRO	92150903	ø 330 x 22 x 62.8	
										TPM0002		
										91062400	ø 210 x 30	
413400			Ate		2392201	[o] 23922 21	⊕ J ⊕ USA ⊕ AUS	Ate		2392302	[o] 23923 18	⊖ USA
GL 450 4-matic (164.871)	09/06→	250 / 340										
			Ate		2392281	[o] 23922 21	⊕ J ⊕ USA ⊕ AUS	Ate		2392381	[o] 23923 18	⊖ USA
			Ate		2415101	[o] 24151 20.3	⊖ J ⊖ USA ⊖ AUS ⊕ AUS ⊕ rim size 19"			98040100	L95	right →A 409082
					98040100	L95	right →A 409082	Ate		82062900		
			Ate		82059200		⊖ J ⊖ USA ⊖ AUS	Ate		82076400		
			Ate		82059200					TPM0002		
			Ate		82062900					91062400	ø 210 x 30	

		kW / hp										
GL-CLASS (X164) 09/06→12/10												
413400 GL 450 4-matic (164.871)	09/06→	250 / 340		PRO	92150703	ø 350 x 32 x 54.7	⊕ J ⊕ USA ⊕ AUS					
				PRO	92150705	ø 350 x 32 x 54.7	⊕ J ⊕ USA ⊕ AUS					
				PRO	92176603	ø 375 x 32 x 54.5	⊖ J ⊖ USA ⊖ AUS					
					TPM0002							
413500 GL 500 4-matic (164.886)	09/06→	285 / 388	Ate		2392201	[o] 23922 21	⊕ J ⊕ USA ⊕ AUS	Ate	epad	2392381	[o] 23923 18	
			Ate	epad	2392281	[o] 23922 21	⊕ J ⊕ USA ⊕ AUS			98040100	L95	right →A 409082
			Ate		2415101	[o] 24151 20.3	⊕ HD BRAKES	Ate		82062900		
					98040100	L95	right →A 409082	Ate		82076400		
			Ate		82059200		⊖ J ⊖ USA ⊖ AUS		PRO	92150903	ø 330 x 22 x 62.8	
			Ate		82062900					TPM0002		
				PRO	92150703	ø 350 x 32 x 54.7	⊕ J ⊕ USA ⊕ AUS			91062400	ø 210 x 30	
				PRO	92150705	ø 350 x 32 x 54.7	⊕ J ⊕ USA ⊕ AUS			97032200		
				PRO	92176603	ø 375 x 32 x 54.5	⊖ J ⊖ USA ⊖ AUS					
					TPM0002							
GL-CLASS (X166) 07/12→												
413600 GL 350 BlueTec 4-matic (166.823, 166.824)	07/12→	190 / 258	Ate		2519201	[o] 25192 19	⊖ AMG sport pack. ⊕ USA	TRW		2521501	[o] 25215 18.7	⊖ USA
			Ate		2519202	[o] 25192 21.3	⊖ AMG sport pack. ⊖ USA	TRW		2521502	[o] 25215 18.7	⊕ USA
			Ate		2553101	[o] 25531 19.2	⊕ AMG sport pack. ⊖ USA			TPM0002		
			Ate		2553103	[o] 25531 17.2	⊕ AMG sport pack. ⊕ USA					
					98040100	L95						
					TPM0002							
413700 GL 350 CDI 4-matic	07/12→	179 / 243	Ate		2519201	[o] 25192 19	⊖ AMG sport pack. ⊕ USA	TRW		2521501	[o] 25215 18.7	
			Ate		2553101	[o] 25531 19.2	⊕ AMG sport pack. ⊖ USA			98024701	L95	
			Ate		2553103	[o] 25531 17.2	⊕ AMG sport pack. ⊕ USA			TPM0002		
					98040100	L95						
					TPM0002							
413800 GL 400 4-matic (166.856)	08/13→	245 / 333	Ate		2519201	[o] 25192 19	⊖ AMG sport pack. ⊕ USA	TRW		2521501	[o] 25215 18.7	
			Ate		2519202	[o] 25192 21.3	⊖ AMG sport pack. ⊖ USA			98024701	L95	
			Ate		2553101	[o] 25531 19.2	⊕ AMG sport pack. ⊖ USA			TPM0002		
			Ate		2553103	[o] 25531 17.2	⊕ AMG sport pack. ⊕ USA					
					98040100	L95						
					TPM0002							
413900 GL 450 4matic (166.872)	11/12→	270 / 362	Ate		2519201	[o] 25192 19	⊕ USA	TRW		2521501	[o] 25215 18.7	
GL 450 4-matic (166.872)	07/12→	270 / 367	Ate		2553101	[o] 25531 19.2	⊕ AMG sport pack. ⊖ USA			98024701	L95	
			Ate		2553103	[o] 25531 17.2	⊕ AMG sport pack. ⊕ USA			TPM0002		2x
					98040100	L95						
					TPM0002		2x					
414000 GL 500 4-matic (166.873)	07/12→	320 / 435	Ate		2553101	[o] 25531 19.2		TRW		2521501	[o] 25215 18.7	
					98040100	L95				TPM0002		2x
					TPM0002		2x					

		kW / hp											
GL-CLASS (X166) 07/12→													
		414100	Bre		2445501	[o] 24455 16.9		TRW		2521505	[o] 25215 16.5	
GL 63 AMG 4-matic	07/12→	405 / 551			98036401	L98				98036401	L98	
					TPM0002					TPM0002		
		414200	Bre		2445501	[o] 24455 16.9	⊕ AMG Perform. Pack	TRW		2521505	[o] 25215 16.5	
GL 63 AMG 4-matic (166.874)	07/12→	410 / 558			98036400	L98				TPM0002		2x
					TPM0002		2x					
GLK-CLASS (X204) 06/08→												
		414300	Bos		2486701	[o] 24867 20.2		Ate		2425401	[o] 24254 17.9	
200 (204.934)	08/13→	135 / 184										
200 CDI (204.901)	07/10→	105 / 143										
200 CDI (204.901)	12/13→	100 / 136	Bos		2486781	[o] 24867 20.2		Ate		2425481	[o] 24254 17.9	
220 CDI (204.902)	12/08→	120 / 163										
220 CDI (204.902)	12/08→	125 / 170			98024701	L95				98024701	L95	
220 CDI 4-matic (204.984, 204.997)	12/08→	125 / 170										
220 CDI 4-matic (204.984)	12/08→	120 / 163	Bos		82513000			Ate		82062900		
250 (204.936)	08/13→	155 / 211										
250 CDI 4-matic (204.982, 204.904)	09/09→	150 / 204			92119903	ø 330 x 32 x 64.5		Ate		82503500		
280 4-matic (204.981)	06/08→06/09	170 / 231			92119905	ø 330 x 32 x 64.5				92115503	ø 300 x 22 x 68	
300 4-matic (204.981)	07/09→04/11	170 / 231										
320 CDI 4-matic (204.983)	06/08→	165 / 224								92115505	ø 300 x 22 x 68	
350 (204.956)	04/09→	200 / 272			TPM0002							
350 4-matic (204.987)	06/08→04/11	200 / 272								TPM0002		
350 4-matic (204.988)	06/08→	225 / 306										
350 CDI 4-matic (204.992)	07/09→01/10	165 / 224										
350 CDI 4-matic (204.992)	02/10→05/10	170 / 231								91069100	ø 180 x 25	
350 CDI 4-matic (204.993)	07/12→	195 / 265										
350 CGI	09/12→	225 / 306										
		414400	Bos		2486701	[o] 24867 20.2		Ate		2425401	[o] 24254 17.9	
250 4-matic (204.937)	08/13→	155 / 211										
			Bos		2486781	[o] 24867 20.2		Ate		2425481	[o] 24254 17.9	
					98024701	L95				98024701	L95	
					92119903	ø 330 x 32 x 64.5				92115503	ø 300 x 22 x 68	
					92119905	ø 330 x 32 x 64.5				92115505	ø 300 x 22 x 68	
					TPM0002					TPM0002		
										91069100	ø 180 x 25	
		414500	Bos		2486701	[o] 24867 20.2		Ate		2425401	[o] 24254 17.9	
300 4-matic	09/09→	182 / 248										
			Bos		2486781	[o] 24867 20.2		Ate		2425481	[o] 24254 17.9	
					98024701	L95				98024701	L95	
					92119903	ø 330 x 32 x 64.5		Ate		82503500		
					92119905	ø 330 x 32 x 64.5				92115503	ø 300 x 22 x 68	
					TPM0002					92115505	ø 300 x 22 x 68	
										TPM0002		
										91069100	ø 180 x 25	
GLK-KLASSE (X204) 06/08→ → GLK-CLASS (X204), Page 661												
GL-KLASSE (X164) 09/06→12/10 → GL-CLASS (X164), Page 658												
GL-KLASSE (X166) 07/12→ → GL-CLASS (X166), Page 660												
KLASA V (W447) 03/14→ → V-CLASS (W447), Page 700												
MB100 Box (KPA) 11/99→05/05												
		414600	Ben		2157302	[–] 21573 14				91044300	ø 254 x 57	
2.3 D	11/99→01/03	58 / 79										
2.3 i	11/99→05/05	90 / 122			92038900	ø 238.5 x 16 x 79		Luc		97009000		
2.9 D	10/01→05/05	70 / 95										
					92087300	ø 263 x 24 x 82				94011600	ø 254,0 x 65	
MB100 Kasten (KPA) 11/99→05/05 → MB100 Box (KPA), Page 661												
MB140 Box (KPA) 11/99→05/05												
		414700	Ben		2157302	[–] 21573 14				91044300	ø 254 x 57	
2.3 i	11/99→05/05	90 / 122										
2.9 D	10/01→05/05	70 / 95										



kW / hp

MB140 Box (KPA) 11/99→05/05

414700											
2.3 i	11/99→05/05	90 / 122		92038900	ø 238.5 x 16 x 79		Luc	97009000		
2.9 D	10/01→05/05	70 / 95		92087300	ø 263 x 24 x 82			94011600	ø 254,0 x 65	

MB140 Kasten (KPA) 11/99→05/05 → MB140 Box (KPA), Page 661

M-CLASS (W163) 02/98→06/05

414800											
ML 230 (163.136)	02/98→06/05	110 / 150	Bre	2327102	[o] 23271 17.7	A289559/X754620→	Ate	2315702	[o] 23157 16	09/00→ A289559/X754620→
			Bre	2327181	[o] 23271 17.7	A289559/X754620→	Ate	2315781	[o] 23157 16	09/00→ A289559/X754620→
			Bos	2319303	[+] 23193 16.3	→A289558/X754619	Bos	2319002	[o] 23190 16.7	12/98→ →09/00 →A289558/X754619
				98027100	L147	A289559/X754620→	Bos	2318902	[+] 23189 16.7	→11/98
				98027101	L147	A289559/X754620→		98026200	L239	12/98→ →A289558/X754619
				98027102	L147	A289559/X754620→	Bre	82504300		09/00→ A289559/X754620→
				98041000	L184	→A289558/X754619	Bos	82508800		→09/00 →A289558/X754619
			Bre	82500600		A289559/X754620→		92090003	ø 285 x 15 x 55.5	→A289558/X754619
			Bos	82508700		→A289558/X754619		92103303	ø 331 x 14 x 55.3	A289559/X754620→
				92089903	ø 303 x 26 x 51.5	→A289558/X754619		TPM0006		
				92089905	ø 303 x 26 x 51.5	→A289558/X754619		91057800	ø 183 x 31	
				92103203	ø 345 x 32 x 51	A289559/X754620→		97034600		
				92103205	ø 345 x 32 x 51	A289559/X754620→				
				TPM0006						
414900											
ML 270 CDI (163.113)	12/99→06/05	120 / 163	Bre	2327102	[o] 23271 17.7	A289559/X754620→	Ate	2315702	[o] 23157 16	09/00→ A289559/X754620→
			Bre	2327181	[o] 23271 17.7	A289559/X754620→	Ate	2315781	[o] 23157 16	09/00→ A289559/X754620→
			Bos	2319303	[+] 23193 16.3	→A289558/X754619	Bos	2319002	[o] 23190 16.7	→09/00 →A289558/X754619
				98027100	L147	A289559/X754620→		98026200	L239	→A289558/X754619
				98027101	L147	A289559/X754620→	Bre	82504300		09/00→ A289559/X754620→
				98027102	L147	A289559/X754620→	Bos	82508800		→09/00 →A289558/X754619
				98041000	L184	→A289558/X754619		92090003	ø 285 x 15 x 55.5	→A289558/X754619
				98049500	L184	→A289558/X754619		92103303	ø 331 x 14 x 55.3	A289559/X754620→
			Bre	82500600		A289559/X754620→		TPM0006		
			Bos	82508700		→A289558/X754619		91057800	ø 183 x 31	
				92089903	ø 303 x 26 x 51.5	→A289558/X754619		97034600		
				92089905	ø 303 x 26 x 51.5	→A289558/X754619				
				92103203	ø 345 x 32 x 51	A289559/X754620→				
				92103205	ø 345 x 32 x 51	A289559/X754620→				
				TPM0006						
415000											
ML 320 (163.154)	02/98→08/02	160 / 218	Bre	2327102	[o] 23271 17.7	A289560/X754620→ ⊖ USA	Ate	2315702	[o] 23157 16	A289560/X754620→ ⊖ USA
			Bre	2327181	[o] 23271 17.7	A289560/X754620→ ⊖ USA	Ate	2315781	[o] 23157 16	A289560/X754620→ ⊖ USA
			Bos	2319303	[+] 23193 16.3	→A289559/X754619	Bos	2318902	[+] 23189 16.7	→A289559/754619 A289560/754620→ ⊕ USA
				98027100	L147	A289559/X754620→		98026200	L239	⊕ USA 12/98→ →A289558/X754619
				98027101	L147	A289559/X754620→	Bre	82504300		A289559/X754620→
				98027102	L147	A289559/X754620→	Bos	82508800		→A289558/X754619 ⊕ USA
				98041000	L184	→A289558/X754619 ⊕ USA		92090003	ø 285 x 15 x 55.5	→A289559/X754619 ⊕ USA
				98049500	L184	→A289558/X754619 ⊕ USA		92103303	ø 331 x 14 x 55.3	A289559/X754620→

kW / hp

M-CLASS (W163) 02/98→06/05

415000													
ML 320 (163.154)	02/98→08/02	160 / 218	Bre		82500600		A289559/X754620→			TPM0006		
			Bos		82508700		→A289558/X754619 ⊕ USA			91057800	ø 183 x 31	
				PRO	92089903	ø 303 x 26 x 51.5	→A289558/X754619 ⊕ USA			97034600		
				PRO	92089905	ø 303 x 26 x 51.5	→A289558/X754619 ⊕ USA					
				PRO	92103203	ø 345 x 32 x 51	A289559/X754620→					
				PRO	92103205	ø 345 x 32 x 51	A289559/X754620→					
					TPM0006							
415100													
ML 350	02/03→06/05	173 / 235	Bre		2327102	[o] 23271 17.7	A289559/X754620→	Ate		2315702	[o] 23157 16	A289559/X754620→
			Bre	epad	2327181	[o] 23271 17.7	A289559/X754620→	Ate	epad	2315781	[o] 23157 16	A289559/X754620→
			Bos		2319303	[+] 23193 16.3	→A289558/X754619 ⊕ USA	Bos		2319002	[o] 23190 16.7	→A289558/X754619 ⊕ USA
					98027100	L147	A289559/X754620→			98026200	L239	⊕ USA →A289558/X754619
					98027101	L147	A289559/X754620→	Bre		82504300		A289559/X754620→
					98027102	L147	A289559/X754620→	Bos		82508800		→A289558/X754619 ⊕ USA
					98041000	L184	→A289558/X754619 ⊕ USA		PRO	92090003	ø 285 x 15 x 55.5	→A289558/X754619 ⊕ USA
					98049500	L184	→A289558/X754619 ⊕ USA		PRO	92103303	ø 331 x 14 x 55.3	A289559/X754620→
			Bre		82500600		A289559/X754620→			TPM0006		
			Bos		82508700		→A289558/X754619 ⊕ USA			91057800	ø 183 x 31	
				PRO	92089903	ø 303 x 26 x 51.5	→A289558/X754619 ⊕ USA			97034600		
				PRO	92089905	ø 303 x 26 x 51.5	→A289558/X754619 ⊕ USA					
				PRO	92103203	ø 345 x 32 x 51	A289559/X754620→					
				PRO	92103205	ø 345 x 32 x 51	A289559/X754620→					
					TPM0006							
415200													
ML 350 (163.157)	08/02→06/05	180 / 245	Bre		2327102	[o] 23271 17.7		Ate		2315702	[o] 23157 16	
ML 400 CDI (163.128)	09/01→06/05	184 / 250										
ML 500 (163.175)	09/01→06/05	215 / 292	Bre	epad	2327181	[o] 23271 17.7		Ate	epad	2315781	[o] 23157 16	
ML 55 AMG (163.174)	02/00→06/05	255 / 347			98030000	L114				98030000	L114	
			Bre		82500600			Bre		82504300		
				PRO	92103203	ø 345 x 32 x 51			PRO	92103303	ø 331 x 14 x 55.3	
				PRO	92103205	ø 345 x 32 x 51				TPM0006		
					TPM0006					91057800	ø 183 x 31	
										97034600		
415300													
ML 350 4-matic	09/02→06/05	173 / 235	Bre		2327102	[o] 23271 17.7	A289560→ X754620→	Ate		2315702	[o] 23157 16	→A289559
			Bre	epad	2327181	[o] 23271 17.7	A289560→ X754620→	Ate	epad	2315781	[o] 23157 16	→A289559
			Bos		2319303	[+] 23193 16.3	⊕ USA	Bos		2319002	[o] 23190 16.7	A289560→
					98030000	L114		Bos		2318902	[+] 23189 16.7	
				PRO	92089903	ø 303 x 26 x 51.5	⊕ USA			98030000	L114	
				PRO	92089905	ø 303 x 26 x 51.5	⊕ USA	Bre		82504300		
				PRO	92103203	ø 345 x 32 x 51	A289560→ X754620→		PRO	92090003	ø 285 x 15 x 55.5	⊕ USA
				PRO	92103205	ø 345 x 32 x 51	A289560→ X754620→		PRO	92103303	ø 331 x 14 x 55.3	A289560→ X754620→
										91057800	ø 183 x 31	
415400													
ML 430 (163.172)	02/98→06/05	200 / 272	Bre		2327102	[o] 23271 17.7	⊖ Calif. A145273→ X707756→	Ate		2315702	[o] 23157 16	⊖ Calif. ⊕ Calif. A145273→ 707756→

M-CLASS (W163) 02/98→06/05

		kW / hp												
415400														
ML 430 (163.172)	02/98→06/05	200 / 272	Bre	epad	2327181	[o] 23271 17.7	⊖ Calif. A145273→ X707756→		Ate	epad	2315781	[o] 23157 16	⊖ Calif. ⊕ Calif. A145273→ 707756→
			Bos		2319303	[+] 23193 16.3	⊕ Calif. ⊖ Calif. →A145272 →X707755		Bos		2319002	[o] 23190 16.7	⊕ Calif. →A145272 →X707755
					98027100	L147	⊖ Calif. A145273→ X707756→				98026200	L239	→A145272 →X707755
					98027101	L147	⊖ Calif. A145273→ X707756→				98027100	L147	A145273→ X707756→
					98027102	L147	⊖ Calif. A145273→ X707756→				98027101	L147	A145273→ X707756→
					98041000	L184	⊕ Calif.				98027102	L147	A145273→ X707756→
					98049500	L184	→145272 →X707755 ⊖ Calif. ⊕ Calif. →145272 →X707755 ⊖ Calif.		Bre		82504300		⊖ Calif. ⊕ Calif. A145273→ 707756→
									Bos		82508800		→A145272 →X707755
			Bre		82500600		⊖ Calif. A145273→ X707756→			PRO	92090003	ø 285 x 15 x 55.5	→A145272 →X707755
			Bos		82508700		⊕ Calif. ⊖ Calif. →A145272 →X707755			PRO	92103303	ø 331 x 14 x 55.3	A145273→ 707756→
				PRO	92089903	ø 303 x 26 x 51.5	⊕ Calif. ⊖ Calif. →A145272 →X707755				TPM0006		
				PRO	92089905	ø 303 x 26 x 51.5	⊕ Calif. ⊖ Calif. →A145272 →X707755				91057800	ø 183 x 31	
				PRO	92103203	ø 345 x 32 x 51	⊖ Calif. A145273→ X707756→				97034600		
				PRO	92103205	ø 345 x 32 x 51	⊖ Calif. A145273→ X707756→						
					TPM0006								
415500														
ML 500 4-matic	09/01→06/05	215 / 292	Bre		2327102	[o] 23271 17.7			Ate		2315702	[o] 23157 16	→A289559
			Bre	epad	2327181	[o] 23271 17.7			Ate	epad	2315781	[o] 23157 16	→A289559
					98030000	L114			Bos		2319002	[o] 23190 16.7	A289560→
				PRO	92103203	ø 345 x 32 x 51			Bos		2318902	[+] 23189 16.7	
				PRO	92103205	ø 345 x 32 x 51					98030000	L114	
									Bre		82504300		
										PRO	92103303	ø 331 x 14 x 55.3	
											91057800	ø 183 x 31	

M-CLASS (W164) 07/05→12/11

415600														
ML 280 CDI 4-matic (164.120)	07/05→07/09	140 / 190	Ate		2392201	[o] 23922 21			Ate		2392301	[o] 23923 18	⊖ USA
ML 300 CDI 4-matic (164.120)	07/09→	140 / 190	Ate	epad	2392281	[o] 23922 21			Ate	epad	2392381	[o] 23923 18	⊖ USA
ML 300 CDI 4-matic (164.121)	02/10→	150 / 204			98040100	L95	right				98040100	L95	right
ML 320 CDI 4-matic (164.122)	07/05→07/09	165 / 224	Ate		82059200				Ate		82062900		
ML 350 4-matic (164.186)	07/05→	200 / 272											
ML 350 CDI 4-matic	09/09→	155 / 211	Ate		82062900				Ate		82076400		
ML 350 CDI 4-matic (164.122)	07/09→	165 / 224											
ML 350 CDI 4-matic (164.125)	02/10→	170 / 231		PRO	92150603	ø 330 x 32 x 54.7	⊖ rim size 18"			PRO	92150803	ø 330 x 14 x 62.9	⊖ rim size 18"
				PRO	92150605	ø 330 x 32 x 54.7	⊖ rim size 18"			PRO	92150903	ø 330 x 22 x 62.8	⊕ rim size 18"
				PRO	92150703	ø 350 x 32 x 54.7	⊕ rim size 18"				TPM0002		
				PRO	92150705	ø 350 x 32 x 54.7	⊕ rim size 18"				91062400	ø 210 x 30	
					TPM0002								
415700														
ML 320 CDI 4-matic	09/06→12/08	160 / 218	Ate		2392201	[o] 23922 21			Ate		2392301	[o] 23923 18	
ML 350 CDI 4-matic	09/09→12/10	157 / 214											
ML 350 CDI 4-matic	09/10→12/11	190 / 258	Ate	epad	2392281	[o] 23922 21			Ate	epad	2392381	[o] 23923 18	
ML 450 Hybrid 4-matic	09/09→12/11	200 / 272											
ML 500 4-matic	09/05→12/06	218 / 296			98040100	L95					98040100	L95	
ML 500 4-matic	09/06→12/07	225 / 306	Ate		82059200				Ate		82076400		
				PRO	92150603	ø 330 x 32 x 54.7				PRO	92150803	ø 330 x 14 x 62.9	
				PRO	92150605	ø 330 x 32 x 54.7				PRO	92150903	ø 330 x 22 x 62.8	18'' -brake
				PRO	92150703	ø 350 x 32 x 54.7	18'' -brake				TPM0002		

		kW / hp										
M-CLASS (W164) 07/05→12/11												
		415700		PRO	92150705	ø 350 x 32 x 54.7	18" -brake			91062400	ø 210 x 30	
ML 320 CDI 4-matic	09/06→12/08	160 / 218			TPM0002					97032200		
ML 350 CDI 4-matic	09/09→12/10	157 / 214										
ML 350 CDI 4-matic	09/10→12/11	190 / 258										
ML 450 Hybrid 4-matic	09/09→12/11	200 / 272										
ML 500 4-matic	09/05→12/06	218 / 296										
ML 500 4-matic	09/06→12/07	225 / 306										
		415800	Ate		2392201	[o] 23922 21			Ate	2392301	[o] 23923 18	⊖ USA
ML 420 CDI 4-matic (164.128)	02/06→09/09	225 / 306	Ate	epad	2392281	[o] 23922 21			Ate	2392381	[o] 23923 18	⊖ USA
ML 450 CDI 4-matic (164.128)	09/09→	225 / 306			98040100	L95	right			98040100	L95	right →A 409082
			Ate		82059200				Ate	82062900		
			Ate		82062900				Ate	82076400		
				PRO	92150703	ø 350 x 32 x 54.7				PRO 92150903	ø 330 x 22 x 62.8	
				PRO	92150705	ø 350 x 32 x 54.7				TPM0002		
					TPM0002					91062400	ø 210 x 30	
		415900	Ate		2392201	[o] 23922 21	⊕ J ⊕ USA ⊕ AUS		Ate	2392301	[o] 23923 18	⊖ USA
ML 500 4-matic (164.172)	12/07→	285 / 388	Ate	epad	2392281	[o] 23922 21	⊕ J ⊕ USA ⊕ AUS		Ate	2392381	[o] 23923 18	⊖ USA
			Ate		2415101	[o] 24151 20.3	⊖ J ⊖ USA ⊖ AUS			98040100	L95	right
					98040100	L95	right		Ate	82062900		
			Ate		82059200		⊕ J ⊕ USA ⊕ AUS		Ate	82076400		
			Ate		82062900					PRO 92150903	ø 330 x 22 x 62.8	
				PRO	92150703	ø 350 x 32 x 54.7	⊕ J ⊕ USA ⊕ AUS			TPM0002		
				PRO	92150705	ø 350 x 32 x 54.7	⊕ J ⊕ USA ⊕ AUS			91062400	ø 210 x 30	
				PRO	92176603	ø 375 x 32 x 54.5	⊖ J ⊖ USA ⊖ AUS					
					TPM0002							
		416000	Ate		2392201	[o] 23922 21			Ate	2392301	[o] 23923 18	⊖ USA
ML 500 4-matic (164.175)	07/05→	225 / 306	Ate	epad	2392281	[o] 23922 21			Ate	2392381	[o] 23923 18	⊖ USA
					98040100	L95	right			98040100	L95	right
			Ate		82059200				Ate	82062900		
			Ate		82062900				Ate	82076400		
				PRO	92150603	ø 330 x 32 x 54.7	⊕ J ⊕ USA ⊕ AUS			PRO 92150803	ø 330 x 14 x 62.9	⊕ J ⊕ USA ⊕ AUS
				PRO	92150605	ø 330 x 32 x 54.7	⊕ J ⊕ USA ⊕ AUS			PRO 92150903	ø 330 x 22 x 62.8	
				PRO	92150703	ø 350 x 32 x 54.7	⊖ J ⊖ USA ⊖ AUS			TPM0002		
				PRO	92150705	ø 350 x 32 x 54.7	⊖ J ⊖ USA ⊖ AUS			91062400	ø 210 x 30	
					TPM0002							
		416100	Ate		2417601	[o] 24176 20.8			Ate	2418001	[o] 24180 16.9	
ML 63 AMG 4-matic (164.177)	01/06→	375 / 510			98040100	L95	right			98040100	L95	right
					TPM0002					TPM0002		
										91062400	ø 210 x 30	
M-CLASS (W166) 06/11→												
		416200	Ate		2519201	[o] 25192 19	⊕ USA ⊕ USA ⊕ AMG sport pack.		TRW	2521501	[o] 25215 18.7	⊕ AMG sport pack.
ML 250 CDI / BlueTEC 4-matic (166.004, 166.003)	06/11→	150 / 204	Ate		2519202	[o] 25192 21.3	⊖ USA ⊕ AMG sport pack. ⊖ USA		TRW	2521502	[o] 25215 18.7	⊖ AMG sport pack.
					98040100	L95	right			TPM0002		
					TPM0002							

		kW / hp													
M-CLASS (W166) 06/11→															
		416300	Ate		**2519201**	[o]	25192	19	⊕ AMG sport pack. ⊕ USA	TRW		**2521501**	[o]	25215	18.7	⊕ AMG sport pack. ⊖ USA ⊖ AMG sport pack.
ML 300 4-matic (166.055)	04/14→	185 / 252	Ate		**2519202**	[o]	25192	21.3	⊕ AMG sport pack. ⊖ USA			**98024701**	L95			
			Ate		**2553101**	[o]	25531	19.2	⊕ arm.veh. class B4			**TPM0002**				
					98040100	L95										
					TPM0002											
		416400	Ate		**2519201**	[o]	25192	19	⊕ AMG sport pack. ⊕ USA	TRW		**2521501**	[o]	25215	18.7	⊕ AMG sport pack.
ML 350	09/11→	225 / 306														
ML 350 CDI 4-matic	09/12→	179 / 243	Ate		**2519202**	[o]	25192	21.3	⊖ AMG sport pack. ⊖ USA	TRW		**2521502**	[o]	25215	18.7	⊖ AMG sport pack.
			Ate		**2553101**	[o]	25531	19.2	⊕ AMG sport pack. ⊖ USA			**98024701**	L95			
					98040100	L95						**TPM0002**				
					TPM0002											
		416500	Ate		**2519201**	[o]	25192	19	⊕ USA ⊕ USA ⊕ AMG sport pack.	TRW		**2521501**	[o]	25215	18.7	⊖ AMG sport pack. ⊕ AMG sport pack. ⊖ USA
ML 350 4-matic (166.057)	06/11→	225 / 306	Ate		**2519202**	[o]	25192	21.3	⊖ USA ⊕ AMG sport pack. ⊖ USA			**TPM0002**				
					98040100	L95			right							
					TPM0002											
		416600	Ate		**2519201**	[o]	25192	19	⊕ USA ⊕ USA ⊕ AMG sport pack.	TRW		**2521501**	[o]	25215	18.7	
ML 350 BlueTEC 4-matic (166.024)	06/11→	190 / 258	Ate		**2519202**	[o]	25192	21.3	⊖ USA ⊕ AMG sport pack. ⊖ USA			**TPM0002**				
					98040100	L95			right							
					TPM0002											
		416700	Ate		**2519201**	[o]	25192	19	⊕ USA ⊕ USA ⊕ AMG sport pack.	TRW		**2521501**	[o]	25215	18.7	⊖ AMG sport pack. ⊖ USA
ML 350 CDI 4-matic (166.023)	06/11→	170 / 231	Ate		**2519202**	[o]	25192	21.3	⊖ USA ⊕ AMG sport pack. ⊖ USA			**TPM0002**				
					98040100	L95			right							
					TPM0002											
		416800	Ate		**2519202**	[o]	25192	21.3	⊖ USA	TRW		**2521501**	[o]	25215	18.7	⊕ AMG sport pack. ⊖ USA
ML 400 4-matic (166.056)	08/13→	245 / 333	Ate		**2553101**	[o]	25531	19.2	⊕ AMG sport pack. ⊖ USA			**98024701**	L95			
					98040100	L95						**TPM0002**				
					TPM0002											
		416900	Ate		**2553101**	[o]	25531	19.2	⊖ USA	TRW		**2521501**	[o]	25215	18.7	
ML 500 4-matic (166.073)	02/12→	300 / 408	Ate		**2553103**	[o]	25531	17.2	⊖ USA			**TPM0002**				
					98040100	L95										
					TPM0002											
		417000	Bre		**2445501**	[o]	24455	16.9	⊕ AMG Perform. Pack	TRW		**2521505**	[o]	25215	16.5	
ML 63 AMG 4-matic (166.074)	11/11→	386 / 525														
ML 63 AMG 4-matic (166.074)	11/11→	410 / 558			**98036400**	L98						**TPM0002**				
					TPM0002											
M-KLASSE (W163) 02/98→06/05 → M-CLASS (W163), Page 662																
M-KLASSE (W164) 07/05→12/11 → M-CLASS (W164), Page 664																
M-KLASSE (W166) 06/11→ → M-CLASS (W166), Page 665																
R-CLASS (W251, V251) 09/05→																
		417100	Ate		**2392201**	[o]	23922	21		Ate		**2392301**	[o]	23923	18	
R 280 (251.054, 251.154)	01/07→	170 / 231														
R 280 4-matic (251.062)	05/07→	170 / 231	Ate	epad	**2392281**	[o]	23922	21		Ate	epad	**2392381**	[o]	23923	18	
R 280 CDI (251.121, 251.026, 251.126)	05/06→	140 / 190														
R 280 CDI 4-matic (251.020)	05/06→	140 / 190			**98040100**	L95						**98040100**	L95			
R 300 (251.054, 251.154)	07/09→	170 / 231														
R 300 CDI (251.021, 251.121, 251.026, 251.126)	07/09→	140 / 190	Ate		**82059200**					Ate		**82062900**				
R 300 CDI 4-matic (251.020)	07/09→	140 / 190														

R-CLASS (W251, V251) 09/05→

R 320 CDI 4-matic (251.022, 251.122)	01/06→	165 / 224	Ate		82062900			Ate		82076400				
R 320 CDI 4-matic (251.125)	01/06→	155 / 211		PRO	92150603	ø 330 x 32 x 54.7	⊖ 3rd seating row		PRO	92150803	ø 330 x 14 x 62.9	⊖ 3rd seating row		
R 350 (251.056, 251.156)	01/07→	200 / 272		PRO	92150605	ø 330 x 32 x 54.7	⊖ 3rd seating row		PRO	92150903	ø 330 x 22 x 62.8	⊕ 3rd seating row		
R 350 4-matic (251.065, 251.165)	01/06→	200 / 272		PRO	92150703	ø 350 x 32 x 54.7	⊕ 3rd seating row			TPM0002				
R 350 CDI 4-matic (251.022, 251.122)	07/09→	165 / 224		PRO	92150705	ø 350 x 32 x 54.7	⊕ 3rd seating row			91062400	ø 210 x 30			
R 350 CDI 4-matic (251.023, 251.123)	08/10→	195 / 265			TPM0002					97032200				
R 350 CDI 4-matic (251.124, 251.125)	01/06→	155 / 211												
R 350 CGI 4-matic (251.057, 251.157)	01/06→	225 / 306												
R 500 4-matic (251.072, 251.172)	01/07→	285 / 388												
R 500 4-matic (251.075, 251.175)	01/06→	225 / 306												
417200			Ate		2392201	[o] 23922 21		Ate		2392301	[o] 23923 18			
R 320 CDI 4-matic	09/06→12/08	160 / 218												
R 350 CDI 4-matic	09/09→12/12	157 / 214	Ate		2392281	[o] 23922 21		Ate		2392381	[o] 23923 18			
R 350 CDI 4-matic	09/11→	225 / 306												
R 500 4-matic	09/05→12/06	218 / 296			98040100	L95				98040100	L95			
			Ate		82059200			Ate		82076400				
				PRO	92150603	ø 330 x 32 x 54.7	⊕ USA ⊕ AUS →A120131		PRO	92150803	ø 330 x 14 x 62.9			
				PRO	92150605	ø 330 x 32 x 54.7	⊕ USA ⊕ AUS →A120131		PRO	92150903	ø 330 x 22 x 62.8			
				PRO	92150703	ø 350 x 32 x 54.7	⊖ USA ⊖ AUS →A103893			TPM0002				
				PRO	92150705	ø 350 x 32 x 54.7	⊖ USA ⊖ AUS →A103893			91062400	ø 210 x 30			
					TPM0002					97032200				
417300			Ate		2417601	[o] 24176 20.8		Ate		2418001	[o] 24180 16.9			
R 63 AMG (251.077, 251.177)	02/06→	375 / 510			98040100	L95				98040100	L95			
					TPM0002					TPM0002				
										91062400	ø 210 x 30			
										97032200				

R-KLASSE (W251, V251) 09/05→ → R-CLASS (W251, V251), Page 666

S-CLASS (W220) 10/98→12/05

417400			Bre		2327102	[o] 23271 17.7		Ate		2307801	[o] 23078 15.9	→09/02		
S 280 (220.063, 220.163)	10/98→08/05	150 / 204												
S 320 (220.065, 220.165)	10/98→08/05	165 / 224	Bre		2327181	[o] 23271 17.7		Ate		2307881	[o] 23078 15.9	→09/02		
					98024701	L95		Ate		2333403	[o] 23334 16.8	09/02→		
			Bre		82500600			Ate		2333481	[o] 23334 16.8	09/02→		
				PRO	92099303	ø 312 x 28 x 76				98024701	L95			
					TPM0002			Ate		82501900		→09/02		
								Ate		82062900		09/02→		
								Ate		82076400		09/02→		
									PRO	92099403	ø 300 x 11 x 58.5			
										TPM0002				
										91058900	ø 180 x 25			
417500			Bre		2327102	[o] 23271 17.7		Ate		2333403	[o] 23334 16.8			
S 320 CDI (220.025, 220.125)	09/02→08/05	150 / 204	Bre		2327181	[o] 23271 17.7		Ate		2333481	[o] 23334 16.8			
					98024701	L95				98024701	L95			
			Bre		82500600			Ate		82062900				
				PRO	92099203	ø 330 x 32 x 76		Ate		82076400				
					TPM0002				PRO	92099403	ø 300 x 11 x 58.5			

		kW / hp												
S-CLASS (W220) 10/98→12/05														
S 320 CDI (220.025, 220.125)	09/02→08/05	417500 150 / 204									TPM0002			
											91058900	ø 180 x 25		
S 320 CDI (220.026, 220.126)	08/99→09/02	417600 145 / 197	Bre		2327102	[o] 23271 17.7		Ate		2307801	[o] 23078 15.9		
			Bre	epad	2327181	[o] 23271 17.7		Ate	epad	2307881	[o] 23078 15.9		
					98024701	L95				98024701	L95		
			Bre		82500600			Ate		82501900			
				PRO	92099203	ø 330 x 32 x 76			PRO	92099403	ø 300 x 11 x 58.5		
					TPM0002					TPM0002			
										91058900	ø 180 x 25		
S 350 (220.067, 220.167)	09/02→08/05	417700 180 / 245	Bre		2327102	[o] 23271 17.7		Ate		2333403	[o] 23334 16.8		
			Bre	epad	2327181	[o] 23271 17.7		Ate	epad	2333481	[o] 23334 16.8		
					98024701	L95				98024701	L95		
			Bre		82500600			Ate		82062900			
				PRO	92099303	ø 312 x 28 x 76		Ate		82076400			
					TPM0002				PRO	92099403	ø 300 x 11 x 58.5		
										TPM0002			
										91058900	ø 180 x 25		
S 350 4-matic (220.087, 220.187)	06/03→08/05	417800 180 / 245	Ate		2167001	[o] 21670 20.3	→A411232	Ate		2333403	[o] 23334 16.8		
			Ate	epad	2167081	[o] 21670 20.3	→A411232	Ate	epad	2333481	[o] 23334 16.8		
			Ate		2472201	[o] 24722 19	A411233→			98024701	L95		
			Ate	epad	2472281	[o] 24722 19	A411233→	Ate		82062900			
			Ate		82032000			Ate		82076400			
			Ate		82062900				PRO	92099403	ø 300 x 11 x 58.5	BM 220.087	
				PRO	92124003	ø 304 x 30 x 47.5			PRO	92099503	ø 300 x 22 x 58.5	BM 220.187	
					TPM0002					TPM0002			
										91058900	ø 180 x 25		
S 400 CDI (220.028, 220.128)	06/00→08/05	417900 184 / 250	Bre		2327102	[o] 23271 17.7		Ate		2307801	[o] 23078 15.9	→09/02	
S 430 (220.070, 220.170)	10/98→08/05	205 / 279	Bre	epad	2327181	[o] 23271 17.7		Ate	epad	2307881	[o] 23078 15.9	→09/02	
					98024701	L95		Ate		2333403	[o] 23334 16.8	09/02→	
			Bre		82500600			Ate	epad	2333481	[o] 23334 16.8	09/02→	
				PRO	92099203	ø 330 x 32 x 76				98024701	L95		
					TPM0002			Ate		82501900		→09/02	
								Ate		82062900		09/02→	
								Ate		82076400		09/02→	
									PRO	92099403	ø 300 x 11 x 58.5	A265054→ ⊕ AUS	
									PRO	92099503	ø 300 x 22 x 58.5	⊕ EU →A372602 ⊕ AUS	
										TPM0002			
										91058900	ø 180 x 25		
S 400 CDI (220.028, 220.128)	06/03→08/05	418000 191 / 260	Bre		2327102	[o] 23271 17.7		Ate		2333403	[o] 23334 16.8		
			Bre	epad	2327181	[o] 23271 17.7		Ate	epad	2333481	[o] 23334 16.8		

S-CLASS (W220) 10/98→12/05

418000														
S 400 CDI (220.028, 220.128)	06/03→08/05	191 / 260		98024701	L95			Ate	98024701	L95	
			Bre	82500600				Ate	82062900		
				92099203	ø 330 x 32 x 76			Ate	82076400		
				TPM0002					92099403	ø 300 x 11 x 58.5	A265054→ ⊕ AUS
									92099503	ø 300 x 22 x 58.5	⊕ EU →A372602 ⊕ AUS
									TPM0002		
									91058900	ø 180 x 25	
418100														
S 430 4-matic (220.083, 220.183)	09/02→08/05	205 / 279	Bre	2327102	[o] 23271 17.7			Ate	2333403	[o] 23334 16.8	
S 500 4-matic (220.084, 220.184)	09/02→08/05	225 / 306	Bre	2327181	[o] 23271 17.7			Ate	2333481	[o] 23334 16.8	
				98024701	L95				98024701	L95	
			Bre	82500600				Ate	82062900		
				92124100	ø 330 x 32 x 47.5			Ate	82076400		
				TPM0002					92099503	ø 300 x 22 x 58.5	
									TPM0002		
									91058900	ø 180 x 25	
418200														
S 500	09/99→12/00	225 / 306	Bre	2327102	[o] 23271 17.7	⊕ AMG Perform. Pack		Ate	2189801	[o] 21898 15.7	→A372602 →2002-09-01
			Bre	2327181	[o] 23271 17.7	⊕ AMG Perform. Pack		Ate	2333403	[o] 23334 16.8	A265054→ 2002-09-30→
			Bre	2374502	[o] 23745 17.7	⊖ AMG Perform. Pack		Ate	2333481	[o] 23334 16.8	A265054→ 2002-09-30→
			Bre	2374581	[o] 23745 17.7	⊖ AMG Perform. Pack			98024701	L95	
				98024701	L95			Ate	82076400		
			Bre	82504800					92099403	ø 300 x 11 x 58.5	⊕ AUS A265054→ 2002-09-30→
				92108800	ø 345 x 32 x 76	⊕ AMG Perform. Pack			92109000	ø 315 x 22 x 59.3	⊕ AMG Perform. Pack
				92099203	ø 330 x 32 x 76	⊕ AUS →A372602 →2002-09-01			92099503	ø 300 x 22 x 58.5	⊕ AUS →A372602 →2002-09-01
				92099303	ø 312 x 28 x 76	⊕ AUS A265054→ 2002-09-30→			TPM0002		
				TPM0002					91058900	ø 180 x 25	
418300														
S 500 (220.075, 220.175, 220.875)	10/98→08/05	225 / 306	Bre	2327102	[o] 23271 17.7			Ate	2130501	[o] 21305 15.5	→A396359 →09/02
			Bre	2327181	[o] 23271 17.7			Ate	2130503	[o] 21305 16	⊕ arm.veh. class B4
			Bre	2328501	[o] 23285 17.3	⊕ arm.veh. class B4 ⊕ arm.veh. class B7		Ate	2130504	[o] 21305 15.5	→A396359 →09/02 ⊖ MY 2003 ⊕ arm.veh. class B7
				98024701	L95			Ate	2130581	[o] 21305 15.5	→A396359 →09/02 ⊖ MY 2003 ⊕ arm.veh. class B7 ⊕ arm.veh. class B4
			Bre	82504800				Ate	2307801	[o] 23078 15.9	→A372602 →09/02 ⊖ MY 2003
				92108800	ø 345 x 32 x 76			Ate	2307881	[o] 23078 15.9	→A372602 →09/02 ⊖ MY 2003
				92108900	ø 360 x 32 x 84.5	⊕ arm.veh. class B4 ⊕ arm.veh. class B7		Ate	2333403	[o] 23334 16.8	A265054→ 09/02→
				92099203	ø 330 x 32 x 76	→A372602 →09/02 ⊕ AUS		Ate	2333481	[o] 23334 16.8	A265054→ 09/02→
				92099303	ø 312 x 28 x 76	⊕ AUS A265054→ 09/02→		Bre	2347802	[o] 23478 14.8	A265054→ 09/02→ ⊖ MY 2002 ⊕ arm.veh. class B7
									98024701	L95	
								Ate	82501900		→A369359 →09/02 ⊖ MY 2003
								Ate	82062900		A265054→ 09/02→
								Ate	82076400		A265054→ 09/02→
									92099403	ø 300 x 11 x 58.5	A265054→ ⊕ AUS
									92056800	ø 300 x 22 x 59.7	⊕ arm.veh. class B4

kW / hp

S-CLASS (W220) 10/98→12/05

418300 S 500 (220.075, 220.175, 220.875)	10/98→08/05	225 / 306									92109000	ø 315 x 22 x 59.3	
										PRO	92099503	ø 300 x 22 x 58.5	⊕ EU →A372602 ⊕ AUS
										PRO	92198003	ø 348 x 26 x 58	⊕ arm.veh. class B7
											91058900	ø 180 x 25	
418400 S 55 AMG	09/03→12/05	349 / 475			98036401	L98					98024701	L95	
					TPM0002						TPM0002		
418500 S 55 AMG (220.073, 220.173)	04/99→08/05	265 / 360	Bre		2327102	[o] 23271 17.7		Ate		2307801	[o] 23078 15.9	
			Bre	epad	2327181	[o] 23271 17.7		Ate	epad	2307881	[o] 23078 15.9	
			Bre		2328501	[o] 23285 17.3	⊕ arm.veh.			98024701	L95	
					98024701	L95				92109000	ø 315 x 22 x 59.3	
			Bre		82504800					TPM0002		
					92108800	ø 345 x 32 x 76				91058900	ø 180 x 25	
					92108900	ø 360 x 32 x 84.5	⊕ arm.veh.					
					TPM0002							
418600 S 55 AMG Kompressor (220.074, 220.174)	06/02→08/05	368 / 500	Bre		2394301	[o] 23943 17.5		Bre		2347801	[o] 23478 16.5	
			Bre		82075200					98024701	L95	
					92124200	ø 360 x 36 x 76				92124300	ø 330 x 26 x 61	
					TPM0002					TPM0002		
										91058900	ø 180 x 25	
418700 S 600 (220.176)	09/02→08/05	368 / 500	Bre		2327102	[o] 23271 17.7	⊕ J ⊕ AUS	Bre		2347801	[o] 23478 16.5	⊖ arm.veh.
			Bre	epad	2327181	[o] 23271 17.7	⊕ J ⊕ AUS	Bre		2347802	[o] 23478 14.8	⊕ arm.veh.
			Bre		2328501	[o] 23285 17.3	⊕ arm.veh.			98024701	L95	
			Bre		2394301	[o] 23943 17.5			PRO	92198003	ø 348 x 26 x 58	⊕ arm.veh.
					98024701	L95				TPM0002		
			Bre		82504800		⊕ arm.veh.			91058900	ø 180 x 25	
					92108800	ø 345 x 32 x 76	⊕ J ⊕ AUS					
					92108900	ø 360 x 32 x 84.5	⊕ arm.veh.					
					92124200	ø 360 x 36 x 76						
					TPM0002							
418800 S 600 (220.878, 220.178)	01/00→08/05	270 / 367	Bre		2327102	[o] 23271 17.7		Ate		2130501	[o] 21305 15.5	⊕ arm.veh.
			Bre	epad	2327181	[o] 23271 17.7		Ate		2130503	[o] 21305 16	⊕ arm.veh.
			Bre		2328501	[o] 23285 17.3	⊕ arm.veh.	Ate		2130504	[o] 21305 15.5	⊕ arm.veh.
					98024701	L95		Ate	epad	2130581	[o] 21305 15.5	⊕ arm.veh.
			Bre		82504800		⊕ arm.veh.	Ate		2307801	[o] 23078 15.9	
					92108800	ø 345 x 32 x 76		Ate	epad	2307881	[o] 23078 15.9	
					92108900	ø 360 x 32 x 84.5	⊕ arm.veh.			98024701	L95	
					TPM0002			Ate		82046000		⊕ arm.veh.
										92056800	ø 300 x 22 x 59.7	⊕ arm.veh.
										92109000	ø 315 x 22 x 59.3	
										TPM0002		

	kW / hp											
S-CLASS (W220) 10/98→12/05												
418800												
S 600 (220.878, 220.178)	01/00→08/05	270 / 367										
										91058900	ø 180 x 25	
418900			Bre		2394301	[o] 23943 17.5		Bre		2347801	[o] 23478 16.5	
S 63 AMG	09/01→08/05	326 / 444			98024701	L95				98024701	L95	
			Bre		82075200					92109000	ø 315 x 22 x 59.3	
					92108800	ø 345 x 32 x 76				TPM0002		
					TPM0002							
419000			Bre		2328501	[o] 23285 17.3	⊕ arm.veh.	Bre		2347802	[o] 23478 14.8	⊕ arm.veh.
S 65 AMG (220.179)	03/04→08/05	450 / 612	Bre		2394301	[o] 23943 17.5	⊖ arm.veh.			98024701	L95	
					98024701	L95			PRO	92198003	ø 348 x 26 x 58	⊕ arm.veh.
			Bre		82504800		⊕ arm.veh.			TPM0002		
					92108900	ø 360 x 32 x 84.5	⊕ arm.veh.					
					TPM0002							
S-CLASS (W221) 09/05→12/09												
419100			Bre		2396001	[o] 23960 17.8		Ate		2333403	[o] 23334 16.8	
S 250 CDI (221.003, 221.103)	01/11→	150 / 204	Bre	epad	2396081	[o] 23960 17.8		Ate	epad	2333481	[o] 23334 16.8	
					98036401	L98				98024701	L95	
			Bre		82504000			Ate		82062900		
				PRO	92171903	ø 335 x 32 x 64.5	⊖ AMG sport pack.		PRO	92176503	ø 300 x 12 x 56	⊖ AMG sport pack.
				PRO	92176403	ø 350 x 32 x 64.5	⊕ AMG sport pack.		PRO	92160703	ø 320 x 24 x 58.2	⊕ AMG sport pack.
					TPM0002					TPM0002		
										91067000	ø 180 x 25	
419200			Bre		2396001	[o] 23960 17.8		Ate		2333403	[o] 23334 16.8	
S 280 (221.054)	08/06→	170 / 231	Bre	epad	2396081	[o] 23960 17.8		Ate	epad	2333481	[o] 23334 16.8	
S 300 (221.054)	08/06→	170 / 231			98036401	L98				98024701	L95	
			Bre		82504000			Ate		82062900		
								Ate		82076400		
				PRO	92171903	ø 335 x 32 x 64.5	⊖ sport pack. ⊖ AMG sport pack.					
				PRO	92176403	ø 350 x 32 x 64.5	⊕ sport pack. ⊕ AMG sport pack.		PRO	92176503	ø 300 x 12 x 56	→A293228 10/09→
					TPM0002				PRO	92160703	ø 320 x 24 x 58.2	10/08→ A265576→ ⊕ sport pack. ⊕ AMG sport pack.
									PRO	92176303	ø 300 x 22 x 58.3	A265576→ 10/08→ ⊖ sport pack. ⊖ AMG sport pack.
										TPM0002		
										91067000	ø 180 x 25	
419300			Bre		2396001	[o] 23960 17.8		Ate		2333403	[o] 23334 16.8	
S 320 CDI	10/05→	155 / 211	Bre	epad	2396081	[o] 23960 17.8		Ate	epad	2333481	[o] 23334 16.8	
S 320 CDI (221.022, 221.122)	12/05→06/09	173 / 235			98036401	L98				98024701	L95	
S 350 CDI	06/09→	155 / 211	Bre		82504000			Ate		82062900		⊖ AMG sport pack. ⊕ AMG sport pack. →A289058
				PRO	92171903	ø 335 x 32 x 64.5	⊖ AMG sport pack.	Ate		82076400		⊖ AMG sport pack. ⊕ AMG sport pack. →A289058
				PRO	92176403	ø 350 x 32 x 64.5	⊕ AMG sport pack.		PRO	92176503	ø 300 x 12 x 56	⊖ AMG sport pack.
					TPM0002				PRO	92160703	ø 320 x 24 x 58.2	⊕ AMG sport pack.
										TPM0002		
										91067000	ø 180 x 25	

kW / hp

S-CLASS (W221) 09/05→12/09

S 320 CDI 4-matic (221.080, 221.180)	10/05→	419400 155 / 211	Bre		2396001	[o] 23960 17.8		Ate		2333403	[o] 23334 16.8	
			Bre	epad	2396081	[o] 23960 17.8		Ate	epad	2333481	[o] 23334 16.8	
					98036401	L98				98024701	L95	
			Bre		82504000			Ate		82062900		
				PRO	92176403	ø 350 x 32 x 64.5		Ate		82076400		→289058 →06/09
					TPM0002				PRO	92160703	ø 320 x 24 x 58.2	⊕ sport pack. ⊕ AMG sport pack.
									PRO	92176303	ø 300 x 22 x 58.3	⊖ AMG sport pack. ⊖ sport pack.
										TPM0002		
										91067000	ø 180 x 25	
S 320 CDI 4-matic (221.080, 221.180)	10/06→	419500 173 / 235	Bre		2396001	[o] 23960 17.8		Ate		2333403	[o] 23334 16.8	
			Bre	epad	2396081	[o] 23960 17.8		Ate	epad	2333481	[o] 23334 16.8	
					98036401	L98				98024701	L95	
			Bre		82504000			Ate		82062900		⊖ AMG sport pack. ⊕ AMG sport pack. →A289058
				PRO	92176403	ø 350 x 32 x 64.5		Ate		82076400		⊖ AMG sport pack. ⊕ AMG sport pack. →A289058
					TPM0002				PRO	92176503	ø 300 x 12 x 56	⊖ AMG sport pack.
									PRO	92160703	ø 320 x 24 x 58.2	⊕ AMG sport pack.
										TPM0002		
										91067000	ø 180 x 25	
S 350	10/05→12/06	419600 180 / 245	Bre		2396001	[o] 23960 17.8		Ate		2333403	[o] 23334 16.8	
			Bre	epad	2396081	[o] 23960 17.8		Ate	epad	2333481	[o] 23334 16.8	
					98036401	L98				98024701	L95	
			Bre		82504000			Ate		82076400		
				PRO	92171903	ø 335 x 32 x 64.5	⊖ AMG sport pack. ⊖ sport pack. ⊕ USA ⊕ J ⊕ AUS		PRO	92176503	ø 300 x 12 x 56	⊖ AMG sport pack. ⊖ sport pack. ⊕ USA ⊕ J ⊕ AUS
				PRO	92176403	ø 350 x 32 x 64.5	⊕ AMG sport pack. ⊕ sport pack.		PRO	92160703	ø 320 x 24 x 58.2	⊕ AMG sport pack. ⊕ sport pack.
					TPM0002					TPM0002		
										91067000	ø 180 x 25	
S 350 (221.056, 221.156)	10/05→	419700 200 / 272	Bre		2396001	[o] 23960 17.8		Ate		2333403	[o] 23334 16.8	
			Bre	epad	2396081	[o] 23960 17.8		Ate	epad	2333481	[o] 23334 16.8	
					98036401	L98				98024701	L95	
			Bre		82504000			Ate		82062900		
				PRO	92171903	ø 335 x 32 x 64.5		Ate		82076400		→A289058
					TPM0002				PRO	92176503	ø 300 x 12 x 56	⊕ J ⊕ USA ⊕ AUS ⊖ sport pack.
									PRO	92160703	ø 320 x 24 x 58.2	⊕ sport pack.
									PRO	92176303	ø 300 x 22 x 58.3	⊖ J ⊖ USA ⊖ AUS ⊖ sport pack.
										TPM0002		
										91067000	ø 180 x 25	
S 350 4-matic (221.087, 221.187)	02/08→	419800 200 / 272	Bre		2396001	[o] 23960 17.8		Ate		2333403	[o] 23334 16.8	
			Bre	epad	2396081	[o] 23960 17.8		Ate	epad	2333481	[o] 23334 16.8	
					98036401	L98				98024701	L95	
			Bre		82504000			Ate		82062900		

S-CLASS (W221) 09/05→12/09

		kW / hp												
S 350 4-matic (221.087, 221.187)	02/08→	419800 200 / 272		PRO	92171903	ø 335 x 32 x 64.5	⊖ sport pack. ⊖ AMG sport pack.		Ate		82076400		→A289058
				PRO	92176403	ø 350 x 32 x 64.5	⊕ sport pack. ⊕ AMG sport pack.			PRO	92176503	ø 300 x 12 x 56	→A293228
					TPM0002					PRO	92160703	ø 320 x 24 x 58.2	⊖ J ⊖ USA ⊖ AUS ⊕ sport pack.
										PRO	92176303	ø 300 x 22 x 58.3	⊕ J ⊕ USA ⊕ AUS A293229→
											TPM0002		
											91067000	ø 180 x 25	
S 350 BlueTec (221.026, 221.126)	04/11→	419900 190 / 258	Bre		2396001	[o] 23960 17.8			Ate		2333403	[o] 23334 16.8	
S 350 BlueTEC 4-matic (221.083, 221.183)	04/11→	190 / 258	Bre	epad	2396081	[o] 23960 17.8			Ate	epad	2333481	[o] 23334 16.8	
S 350 CDI	06/09→	173 / 235			98036401	L98					98024701	L95	
S 350 CGI (221.057, 221.157)	04/11→	225 / 306											
S 350 CGI 4-matic (221.082, 221.182)	04/11→	225 / 306	Bre		82504000				Ate		82062900		
S 500	05/11→	271 / 369		PRO	92171903	ø 335 x 32 x 64.5	⊖ sport pack. ⊖ AMG sport pack.			PRO	92176503	ø 300 x 12 x 56	
S 500 CGI (221.073, 221.173)	04/11→	320 / 435		PRO	92176403	ø 350 x 32 x 64.5	⊕ sport pack. ⊕ AMG sport pack.				TPM0002		
S 500 CGI 4-matic (221.094, 221.194)	03/11→	320 / 435			TPM0002						91067000	ø 180 x 25	
S 350 CDI 4-matic	09/11→	420000 179 / 243	Bre		2396001	[o] 23960 17.8			Ate		2333403	[o] 23334 16.8	
S 400 Hybrid	09/09→12/13	220 / 299	Bre	epad	2396081	[o] 23960 17.8			Ate	epad	2333481	[o] 23334 16.8	
					98036401	L98					98024701	L95	
			Bre		82504000				Ate		82076400		
				PRO	92171903	ø 335 x 32 x 64.5	⊖ sport pack. ⊖ AMG sport pack.			PRO	92176503	ø 300 x 12 x 56	⊖ sport pack. ⊖ AMG sport pack.
				PRO	92176403	ø 350 x 32 x 64.5	⊕ sport pack. ⊕ AMG sport pack.			PRO	92160703	ø 320 x 24 x 58.2	⊕ sport pack. ⊕ AMG sport pack.
					TPM0002						TPM0002		
											91067000	ø 180 x 25	
S 400 4-matic	09/08→12/09	420100 250 / 340	Bre		2517903	[o] 25179 17.5					98024701	L95	
					98050400	L100					TPM0001		⊕ arm.veh. class B7
					TPM0002						TPM0002		
S 400 Hybrid (221.095, 221.195)	01/09→	420200 205 / 279	Bre		2396001	[o] 23960 17.8			Ate		2333403	[o] 23334 16.8	
			Bre	epad	2396081	[o] 23960 17.8			Ate	epad	2333481	[o] 23334 16.8	
					98036401	L98					98024701	L95	
			Bre		82504000				Ate		82062900		
				PRO	92171903	ø 335 x 32 x 64.5	⊖ sport pack. ⊖ AMG sport pack.		Ate		82076400		→A 289058
				PRO	92176403	ø 350 x 32 x 64.5	⊕ sport pack. ⊕ AMG sport pack.			PRO	92176503	ø 300 x 12 x 56	⊖ sport pack. ⊖ AMG sport pack.
					TPM0002					PRO	92160703	ø 320 x 24 x 58.2	⊕ sport pack. ⊕ AMG sport pack.
											TPM0002		
											91067000	ø 180 x 25	
S 420 CDI / S 450 CDI (221.028, 221.128)	10/06→	420300 235 / 320	Bre		2396001	[o] 23960 17.8			Ate		2333403	[o] 23334 16.8	
			Bre	epad	2396081	[o] 23960 17.8			Ate	epad	2333481	[o] 23334 16.8	
					98036401	L98					98024701	L95	
			Bre		82504000				Ate		82062900		
				PRO	92176403	ø 350 x 32 x 64.5			Ate		82076400		
					TPM0002					PRO	92160703	ø 320 x 24 x 58.2	
										PRO	92198003	ø 348 x 26 x 58	⊕ arm.veh. class B7

kW / hp

S-CLASS (W221) 09/05→12/09

S 420 CDI / S 450 CDI (221.028, 221.128)	10/06→	420300 235 / 320									TPM0002			
											91067000	ø 180 x 25		
S 450 (221.070, 221.170)	12/05→	420400 250 / 340	Bre		2396001	[o] 23960 17.8			Ate		2333403	[o] 23334 16.8		
			Bre	epad	2396081	[o] 23960 17.8			Ate	epad	2333481	[o] 23334 16.8		
					98036401	L98					98024701	L95		
			Bre		82504000				Ate		82062900			
				PRO	92171903	ø 335 x 32 x 64.5	⊖ sport pack. ⊕ J ⊕ USA ⊕ AUS		Ate		82076400		→A289058	
				PRO	92176403	ø 350 x 32 x 64.5	⊕ sport pack. ⊖ J ⊖ USA ⊖ AUS			PRO	92176503	ø 300 x 12 x 56	⊖ sport pack. ⊖ AMG sport pack. ⊕ J ⊕ USA ⊕ AUS	
					TPM0002					PRO	92160703	ø 320 x 24 x 58.2	⊖ J ⊖ USA ⊖ AUS ⊕ sport pack. ⊕ AMG sport pack.	
											TPM0002			
											91067000	ø 180 x 25		
S 450 4-matic (221.084, 221.184)	12/05→	420500 250 / 340	Bre		2396001	[o] 23960 17.8			Ate		2333403	[o] 23334 16.8		
S 500 4-matic (221.086, 221.186)	10/05→	285 / 388	Bre	epad	2396081	[o] 23960 17.8			Ate	epad	2333481	[o] 23334 16.8		
					98036401	L98					98024701	L95		
			Bre		82504000				Ate		82062900			
				PRO	92176403	ø 350 x 32 x 64.5			Ate		82076400		→A289058	
					TPM0002					PRO	92160703	ø 320 x 24 x 58.2		
											TPM0002			
											91067000	ø 180 x 25		
S 500 (221.071, 221.171)	10/05→	420600 285 / 388	Bre		2396001	[o] 23960 17.8			Ate		2333403	[o] 23334 16.8		
			Bre	epad	2396081	[o] 23960 17.8			Ate	epad	2333481	[o] 23334 16.8		
					98036401	L98					98024701	L95		
			Bre		82504000				Ate		82062900			
				PRO	92171903	ø 335 x 32 x 64.5	⊖ sport pack. ⊕ J ⊕ USA ⊕ AUS		Ate		82076400		→A289058	
				PRO	92176403	ø 350 x 32 x 64.5	⊕ sport pack. ⊖ J ⊖ USA ⊖ AUS			PRO	92176503	ø 300 x 12 x 56	⊕ AMG sport pack. ⊖ AMG sport pack. ⊕ J ⊕ USA ⊕ AUS	
					TPM0002					PRO	92160703	ø 320 x 24 x 58.2	⊖ J ⊖ USA ⊖ AUS ⊕ sport pack. ⊕ AMG sport pack.	
											TPM0002			
											91067000	ø 180 x 25		
S 55 AMG	10/05→12/06	420700 349 / 475			98036401	L98					98024701	L95		
					TPM0002						TPM0002			
S 600	09/05→12/07	420800 368 / 500	Bre		2327105	[–] 23271 17.7	⊕ arm.veh.		Bre		2347801	[o] 23478 16.5	⊖ J ⊖ USA ⊖ AUS ⊕ AMG sport pack.	
			Bre		2394301	[o] 23943 17.5	⊖ J ⊖ USA ⊖ AUS ⊖ arm.veh. →A097049 →06/06 ⊕ AMG sport pack.				98024701	L95		
			Bre		2396001	[o] 23960 17.8	⊕ J ⊕ USA ⊕ AUS ⊖ arm.veh.		Ate		82076400		⊕ J ⊕ USA ⊕ AUS	
			Bre	epad	2396081	[o] 23960 17.8	⊕ J ⊕ USA ⊕ AUS ⊖ arm.veh.			PRO	92160703	ø 320 x 24 x 58.2	⊕ J ⊕ USA ⊕ AUS ⊕ sport pack. ⊕ AMG sport pack.	
					98036401	L98	→01/06			PRO	92197903	ø 330 x 26 x 58.2	⊖ J ⊖ USA ⊖ AUS ⊕ AMG sport pack.	
			Bre		82504000		⊕ J ⊕ USA ⊕ AUS ⊖ arm.veh.			PRO	92198003	ø 348 x 26 x 58	⊕ arm.veh.	
				PRO	92176403	ø 350 x 32 x 64.5	⊖ arm.veh. ⊕ sport pack. ⊕ AMG sport pack. ⊕ J ⊕ USA ⊕ AUS				TPM0002			
					TPM0002						91067000	ø 180 x 25		
S 600 (221.176)	12/05→	420900 380 / 517	Bre		2327105	[–] 23271 17.7	⊕ arm.veh. →to GVM 2800 lb		Ate		2333403	[o] 23334 16.8		

		kW / hp													
S-CLASS (W221) 09/05→12/09															
		420900	Bre		2394301	[o] 23943	17.5	⊖ J ⊖ USA ⊖ AUS ⊖ arm.veh.	Ate		2333481	[o] 23334	16.8	
S 600 (221.176)	12/05→	380 / 517	Bre		2396001	[o] 23960	17.8	⊕ J ⊕ USA ⊕ AUS ⊖ arm.veh.			98024701	L95		
			Bre	epad	2396081	[o] 23960	17.8	⊕ J ⊕ USA ⊕ AUS ⊖ arm.veh.	Ate		82062900			
					98036401	L98			Ate		82076400			
			Bre		82075200			⊖ J ⊖ USA ⊖ AUS ⊖ arm.veh.		PRO	92198003	ø 348 x 26 x 58		⊕ arm.veh.
			Bre		82504000			⊕ J ⊕ USA ⊕ AUS ⊖ arm.veh.			TPM0002			
				PRO	92176403	ø 350 x 32 x 64.5		⊖ arm.veh.			91067000	ø 180 x 25		
					TPM0002									
		421000			98036401	L98			Ate		2418001	[o] 24180	16.9	
S 63 AMG (221.074, 221.174)	03/11→	400 / 544			TPM0002						98036401	L98		
S 63 AMG (221.074, 221.174)	02/12→	420 / 571									TPM0002			
S 63 AMG (221.077, 221.177)	10/06→	386 / 525												
S 65 AMG (221.179)	12/05→	450 / 612									91067000	ø 180 x 25		
S 65 AMG (221.179)	04/11→	463 / 630												
S-CLASS (W222) 05/13→															
		421100	Bre		2517903	[o] 25179	17.5	⊕ sport pack. ⊕ AMG sport pack.			98024701	L95		
S 300 BlueTEC Hybrid (222.004, 222.104)	02/14→	150 / 204			98050400	L100					TPM0002			
S 300 BlueTEC Hybrid (222.104)	02/14→	170 / 231	Bre		82504000									
					TPM0002									
		421200	Bre		2517903	[o] 25179	17.5	⊕ AMG sport pack. ⊕ sport pack.			98024701	L95		
S 350 BlueTEC (222.032, 222.132)	05/13→	190 / 258	Bre		2518301	[o] 25183	17.8				TPM0002			
					98050400	L100								
					TPM0002									
		421300	Bre		2517903	[o] 25179	17.5	⊖ sport pack. ⊖ AMG sport pack.			98024701	L95		
S 350 BlueTEC 4-matic (222.033, 222.133)	02/14→	190 / 258	Bre		2518301	[o] 25183	17.8	⊕ sport pack. ⊕ AMG sport pack.						
S 350 BlueTEC 4-matic (222.133)	02/14→	185 / 252			98050400	L100								
			Bre		82504000									
					TPM0002									
		421400	Bre		2517903	[o] 25179	17.5	⊕ AMG sport pack. ⊕ sport pack. ⊕ USA			98024701	L95		
S 400 Hybrid (222.057, 222.157)	05/13→	225 / 306	Bre		2518301	[o] 25183	17.8				TPM0002			
					98050400	L100								
			Bre		82504000									
					TPM0002									
		421500	Bre		2517903	[o] 25179	17.5				98024701	L95		
S 500 (222.082, 222.182)	05/13→	335 / 456			98050400	L100					TPM0002			
					TPM0002									
		421600			98050400	L100					98024701	L95		
S 500 4-matic (222.085, 222.185)	05/13→	335 / 456			TPM0002						TPM0002			
		421700			98036401	L98					98024701	L95		
S 600 (222.176)	02/14→	390 / 530			TPM0002						TPM0002			
		421800			98036401	L98					98024701	L95		⊖ ceramic brake
S 63 AMG (222.077)	05/13→	430 / 585												
S 63 AMG 4-matic (222.178)	05/13→	430 / 585			TPM0002						TPM0002			
S 65 AMG (222.179)	02/14→	463 / 630												

kW / hp

S-CLASS Coupe (C140) 09/92→02/99

421900			Gir	2130304	[o] 21303 18.8		Ate	2130501	[o] 21305 15.5	
SEC/CL 420 (140.063)	10/94→02/99	205 / 279		98013500	L94		Ate	2130581	[o] 21305 15.5	
				82500200			Bre	82503700		
				92056600	ø 320 x 30 x 82			92056800	ø 300 x 22 x 59.7	
				TPM0001				TPM0001		
								91044500	ø 164 x 25	
								97034500		
422000			Gir	2130304	[o] 21303 18.8		Ate	2130501	[o] 21305 15.5	
SEC/CL 500 (140.070)	10/92→02/99	235 / 320		98013500	L94	07/94→	Ate	2130581	[o] 21305 15.5	
SEC/CL 600 (140.076)	09/92→02/99	290 / 394		98021302	L90	→06/94	Bre	82503700		
				82500200				92056800	ø 300 x 22 x 59.7	
				92056600	ø 320 x 30 x 82			TPM0001		
				TPM0001				91044500	ø 164 x 25	
								97034500		

S-CLASS Coupe (C215) 03/99→08/06

422100			Bre	2327102	[o] 23271 17.7	⊕ AMG Perform. Pack	Ate	2189801	[o] 21898 15.7	
CL 500	09/99→12/05	225 / 306								
CL 500	09/04→12/05	215 / 292	Bre	2327181	[o] 23271 17.7	⊕ AMG Perform. Pack		98024701	L95	
			Bre	2374502	[o] 23745 17.7	⊕ AUS	Ate	82076400		
			Bre	2374581	[o] 23745 17.7	⊕ AUS		92099403	ø 300 x 11 x 58.5	A024279→ 2002-09-30→
				98024701	L95			92109000	ø 315 x 22 x 59.3	⊕ AMG Perform. Pack
			Bre	82504800				92099503	ø 300 x 22 x 58.5	→A032099 →2002-09-30
				92108800	ø 345 x 32 x 76	⊕ AMG Perform. Pack		TPM0002		
				92099203	ø 330 x 32 x 76	⊕ AUS →A032099 →2002-09-30		91058900	ø 180 x 25	
				92099303	ø 312 x 28 x 76	⊕ AUS A024279→ 2002-09-30→				
				TPM0002						
422200			Bre	2327102	[o] 23271 17.7		Ate	2307801	[o] 23078 15.9	→12/02
CL 500 (215.375)	03/99→03/06	225 / 306	Bre	2327181	[o] 23271 17.7		Ate	2307881	[o] 23078 15.9	→12/02
				98024700	L95		Ate	2333403	[o] 23334 16.8	01/02→
			Bre	82500600			Ate	2333481	[o] 23334 16.8	01/02→
				92099203	ø 330 x 32 x 76			98024701	L95	
				92099303	ø 312 x 28 x 76		Ate	82501900		→12/02
				TPM0002			Ate	82062900		01/02→
							Ate	82076400		01/02→
								92099403	ø 300 x 11 x 58.5	⊕ AUS
								92099503	ø 300 x 22 x 58.5	
								TPM0002		
								91058900	ø 180 x 25	
422300			Bre	2394301	[o] 23943 17.5		Bre	2347801	[o] 23478 16.5	
CL 55 AMG	09/00→12/02	255 / 347		98024701	L95			98024701	L95	
				92124200	ø 360 x 36 x 76			92124300	ø 330 x 26 x 61	

kW / hp

S-CLASS Coupe (C215) 03/99→08/06

CL 55 AMG	09/00→12/02	422300 255 / 347			TPM0002						TPM0001		
											91058900	ø 180 x 25	
CL 55 AMG	09/03→12/05	422400 349 / 475	Bre		2327102	[o] 23271 17.7		Ate		2189801	[o] 21898 15.7	
CL 55 AMG	09/03→08/06	367 / 499	Bre	epad	2327181	[o] 23271 17.7				98024701	L95	
					98024701	L95				92109000	ø 315 x 22 x 59.3	
			Bre		82504800					TPM0002		
					92108800	ø 345 x 32 x 76				91058900	ø 180 x 25	
					TPM0002							
CL 55 AMG (215.373)	10/99→03/06	422500 265 / 360	Bre		2327102	[o] 23271 17.7	→A024509	Ate		2307801	[o] 23078 15.9	
			Bre	epad	2327181	[o] 23271 17.7	→A024509	Ate	epad	2307881	[o] 23078 15.9	
			Bre		2374502	[o] 23745 17.7	A024510→			98024701	L95	
			Bre	epad	2374581	[o] 23745 17.7	A024510→	Ate		82501900		
					98024701	L95				92109000	ø 315 x 22 x 59.3	
			Bre		82500600		→A024509			TPM0002		
			Bre		82504800		A024510→			91058900	ø 180 x 25	
					92108800	ø 345 x 32 x 76						
					TPM0002							
CL 55 AMG Kompressor (215.374)	06/02→03/06	422600 368 / 500	Bre		2394301	[o] 23943 17.5		Ate		2307801	[o] 23078 15.9	
					98024701	L95		Ate	epad	2307881	[o] 23078 15.9	
			Bre		82075200					98024701	L95	
					92124200	ø 360 x 36 x 76		Ate		82501900		
					TPM0002					92124300	ø 330 x 26 x 61	
										TPM0002		
										91058900	ø 180 x 25	
CL 600 (215.376)	09/02→03/06	422700 368 / 500	Bre		2327102	[o] 23271 17.7		Ate		2307801	[o] 23078 15.9	
			Bre	epad	2327181	[o] 23271 17.7		Ate	epad	2307881	[o] 23078 15.9	
					98024701	L95				98024701	L95	
			Bre		82500600			Ate		82501900		
					92108800	ø 345 x 32 x 76	⊕ AUS			TPM0002		
					92124200	ø 360 x 36 x 76	⊖ AUS			91058900	ø 180 x 25	
					TPM0002							
CL 600 (215.378)	03/99→03/06	422800 270 / 367	Bre		2327102	[o] 23271 17.7		Ate		2307801	[o] 23078 15.9	
			Bre	epad	2327181	[o] 23271 17.7		Ate	epad	2307881	[o] 23078 15.9	
					98024700	L95				98024701	L95	
			Bre		82500600			Ate		82501900		
					92108800	ø 345 x 32 x 76				92109000	ø 315 x 22 x 59.3	
					TPM0002					TPM0002		
										91058900	ø 180 x 25	
CL 63 AMG	09/01→03/06	422900 326 / 444	Bre		2327102	[o] 23271 17.7	→A024509	Ate		2307801	[o] 23078 15.9	
			Bre	epad	2327181	[o] 23271 17.7	→A024509	Ate	epad	2307881	[o] 23078 15.9	

I - M

		kW / hp												
S-CLASS Coupe (C215) 03/99→08/06														
422900			Bre		**2374502**	[o] 23745 17.7	A024510→				**98024701**	L95	
CL 63 AMG	09/01→03/06	326 / 444	Bre	epad	**2374581**	[o] 23745 17.7	A024510→		Ate		**82501900**		
					98024700	L95					**92109000**	ø 315 x 22 x 59.3	
			Bre		**82500600**		→A024509				**TPM0002**		
			Bre		**82504800**		A024510→				**91058900**	ø 180 x 25	
					92108800	ø 345 x 32 x 76							
					TPM0002								
423000			Bre		**2394301**	[o] 23943 17.5			Bre		**2347802**	[o] 23478 14.8	
CL 65 AMG (215.379)	09/03→03/06	450 / 612			**98024701**	L95					**98024701**	L95	
			Bre		**82075200**						**92120000**	ø 330 x 26 x 68.3	
				PRO	**92120303**	ø 360 x 36 x 64.5					**TPM0002**		
				PRO	**92120305**	ø 360 x 36 x 64.5					**91058800**	ø 180 x 25	
					TPM0002						**97035400**		
S-CLASS Coupe (C216) 05/06→														
423100			Bre		**2396001**	[o] 23960 17.8			Ate		**2333403**	[o] 23334 16.8	
CL 500	09/09→	189 / 257	Bre	epad	**2396081**	[o] 23960 17.8			Ate	epad	**2333481**	[o] 23334 16.8	
					98036401	L98					**98024701**	L95	
			Bre		**82504000**				Ate		**82076400**		
				PRO	**92171903**	ø 335 x 32 x 64.5	⊕ J ⊕ USA ⊕ AUS ⊖ sport pack. ⊖ AMG sport pack.			PRO	**92176503**	ø 300 x 12 x 56	⊕ sunroof ⊕ USA ⊕ AUS
				PRO	**92176403**	ø 350 x 32 x 64.5				PRO	**92160703**	ø 320 x 24 x 58.2	⊕ sport pack. ⊕ AMG sport pack.
					TPM0002						**TPM0002**		
											91067000	ø 180 x 25	
423200			Bre		**2396001**	[o] 23960 17.8			Ate		**2333403**	[o] 23334 16.8	
CL 500 (216.371)	06/06→	285 / 388	Bre	epad	**2396081**	[o] 23960 17.8			Ate	epad	**2333481**	[o] 23334 16.8	
					98036400	L98			Ate		**82062900**		
			Bre		**82504000**				Ate		**82076400**		
				PRO	**92171903**	ø 335 x 32 x 64.5	⊖ J ⊖ USA ⊖ AUS			PRO	**92176503**	ø 300 x 12 x 56	⊕ USA ⊕ J ⊕ AUS
				PRO	**92176403**	ø 350 x 32 x 64.5	⊕ J ⊕ USA ⊕ AUS ⊖ sport pack. ⊖ AMG sport pack.			PRO	**92160703**	ø 320 x 24 x 58.2	⊖ J ⊖ USA ⊖ AUS ⊕ sport pack. ⊕ AMG sport pack.
					TPM0002						**TPM0002**		
											91067000	ø 180 x 25	
423300			Bre		**2396001**	[o] 23960 17.8	⊕ sport pack. ⊕ USA ⊕ J		Ate		**2333403**	[o] 23334 16.8	
CL 500 (216.373)	02/11→	320 / 435											
CL 500 4-matic (216.394)	02/11→	320 / 435	Bre	epad	**2396081**	[o] 23960 17.8	⊕ sport pack. ⊕ USA ⊕ J		Ate	epad	**2333481**	[o] 23334 16.8	
			Bre		**2521901**	[o] 25219 17.8	⊖ J ⊖ USA ⊖ sport pack.		Ate		**82062900**		
					98036400	L98	⊕ sport pack. ⊕ USA ⊕ AMG sport pack. ⊕ J ⊕ AUS			PRO	**92160703**	ø 320 x 24 x 58.2	
			Bre		**82504000**		⊕ sport pack. ⊕ USA ⊕ J				**TPM0002**		
				PRO	**92120303**	ø 360 x 36 x 64.5	⊖ J ⊖ USA ⊖ AUS				**91067000**	ø 180 x 25	
				PRO	**92120305**	ø 360 x 36 x 64.5	⊖ J ⊖ USA ⊖ AUS						
				PRO	**92176403**	ø 350 x 32 x 64.5	⊖ sport pack. ⊖ AMG sport pack. ⊕ J ⊕ USA ⊕ AUS ⊕ sport pack. ⊕ USA ⊕ AMG sport pack. ⊕ J ⊕ AUS						
					TPM0002								

		kW / hp											
S-CLASS Coupe (C216) 05/06→													
		423400	Bre		2396001	[o] 23960 17.8		Ate		2333403	[o] 23334 16.8	
CL 500 4-matic (216.386)	02/08→	285 / 388	Bre	epad	2396081	[o] 23960 17.8		Ate	epad	2333481	[o] 23334 16.8	
					98036400	L98		Ate		82062900		
			Bre		82504000			Ate		82076400		
				PRO	92176403	ø 350 x 32 x 64.5			PRO	92160703	ø 320 x 24 x 58.2	
					TPM0002					TPM0002		
		423500	Bre		2396001	[o] 23960 17.8		Ate		2333403	[o] 23334 16.8	⊕ J ⊕ USA ⊕ AUS ⊕ USA ⊕ sport pack.
CL 600 (216.376)	05/06→	380 / 517	Bre	epad	2396081	[o] 23960 17.8		Ate	epad	2333481	[o] 23334 16.8	⊕ J ⊕ AUS ⊕ AMG sport pack. ⊕ J ⊕ USA ⊕ AUS ⊕ USA ⊕ sport pack.
					98036400	L98						⊕ J ⊕ AUS ⊕ AMG sport pack.
			Bre		82504000		⊕ J ⊕ AUS ⊕ AMG sport pack. ⊕ J ⊕ USA ⊕ AUS ⊖ AMG sport pack.	Bre		2347801	[o] 23478 16.5	⊖ J ⊖ USA ⊖ AUS ⊕ AMG sport pack.
				PRO	92176403	ø 350 x 32 x 64.5	⊕ AMG sport pack. ⊕ J ⊕ AUS ⊖ AMG sport pack. ⊕ J ⊕ USA ⊕ AUS	Ate		82062900		⊕ J ⊕ USA ⊕ AUS ⊕ USA ⊕ sport pack. ⊕ J ⊕ AUS ⊕ AMG sport pack.
					TPM0002			Ate		82076400		
				PRO					PRO	92160703	ø 320 x 24 x 58.2	⊕ J ⊕ USA ⊕ AUS ⊕ USA ⊕ sport pack. ⊕ USA ⊕ AUS ⊕ AMG sport pack.
				PRO					PRO	92197903	ø 330 x 26 x 58.2	⊖ J ⊖ USA ⊖ AUS ⊕ AMG sport pack.
										TPM0002		
										91067000	ø 180 x 25	
		423600			98036400	L98		Ate		2418001	[o] 24180 16.9	
CL 63 AMG (216.374)	01/10→	420 / 571										
CL 63 AMG (216.374)	02/11→	400 / 544										
CL 63 AMG (216.377)	10/06→	386 / 525										
CL 65 AMG (216.379)	10/06→	450 / 612										
CL 65 AMG (216.379)	02/11→	463 / 630			TPM0002					98036400	L98	
										TPM0002		
										91067000	ø 180 x 25	
S-CLASS Coupe (C217) 04/14→												
		423700	Bre		2517903	[o] 25179 17.5				98024701	L95	
S 500 4-matic (217.385)	04/14→	335 / 456			98050400	L100				TPM0002		
					TPM0002							
		423800			98036401	L98				98024701	L95	
S 63 AMG (217.377)	07/14→	430 / 585										
S 65 AMG (217.379)	07/14→	463 / 630			TPM0002					TPM0002		
		423900			98036401	L98	right			98024701	L95	
S 63 AMG 4-matic (217.378)	04/14→	430 / 585			TPM0002					TPM0002		

S-CLASS Saloon (W220) 10/98→12/05 → S-CLASS (W220), Page 667
S-CLASS Saloon (W221) 09/05→12/09 → S-CLASS (W221), Page 671
S-CLASS Stufenheck (W220) 10/98→12/05 → S-CLASS (W220), Page 667
S-CLASS Stufenheck (W221) 09/05→12/09 → S-CLASS (W221), Page 671
S-KLASSE (W220) 10/98→12/05 → S-CLASS (W220), Page 667
S-KLASSE (W221) 09/05→12/09 → S-CLASS (W221), Page 671
S-KLASSE (W222) 05/13→ → S-CLASS (W222), Page 675
S-KLASSE Coupe (C140) 09/92→02/99 → S-CLASS Coupe (C140), Page 676
S-KLASSE Coupe (C215) 03/99→08/06 → S-CLASS Coupe (C215), Page 676
S-KLASSE Coupe (C216) 05/06→ → S-CLASS Coupe (C216), Page 678
S-KLASSE Coupe (C217) 04/14→ → S-CLASS Coupe (C217), Page 679

SL (R129) 07/92→12/01													
		424000	Ate		2115307	[o] 21153 17.5	⊖ ESP	Ate		2119701	[o] 21197 15	→F125157
280 (129.058)	08/93→10/01	142 / 193										
320 (129.063)	09/93→10/01	170 / 231	Bre		2327102	[o] 23271 17.7	⊕ ESP	Ate		2130503	[o] 21305 16	F125158→
			Bre	epad	2327181	[o] 23271 17.7	⊕ ESP	Ate	epad	2130581	[o] 21305 15.5	F125158→

SL (R129) 07/92→12/01

		kW / hp											
		424000											
280 (129.058)	08/93→10/01	142 / 193		98013500	L94			98013500	L94	
320 (129.063)	09/93→10/01	170 / 231	Bre	82500600		⊕ ESP	Ate	82046000		
				92057900	ø 300 x 28 x 45.5	⊖ ESP		92058000	ø 278 x 9 x 58.2	→F125157
				92064000	ø 320 x 30 x 50.5	left ⊕ ESP →08/99		92089000	ø 290 x 10 x 57	⊖ ESP F125158→
				92064100	ø 320 x 30 x 50.5	right ⊕ ESP →08/99		92064200	ø 300 x 22 x 57.5	⊕ ESP F125158→
				TPM0001				TPM0001		
								91032800	ø 164 x 20	
								97011600		
		424100	Ate	2115307	[o] 21153 17.5	⊖ ESP	Ate	2119701	[o] 21197 15	→F125157
280 (129.059)	05/98→10/01	150 / 204	Bre	2327102	[o] 23271 17.7	⊕ ESP	Ate	2130503	[o] 21305 16	F125158→
320 (129.064)	05/98→10/01	165 / 224	Bre	2327181	[o] 23271 17.7	⊕ ESP	Ate	2130581	[o] 21305 15.5	F125158→
				98013500	L94			98013500	L94	
			Bre	82500600		⊕ ESP	Ate	82046000		
				92057900	ø 300 x 28 x 45.5	⊖ ESP →F187941		92058000	ø 278 x 9 x 58.2	→F125157
				92123800	ø 334 x 32 x 51.5	⊕ SL-Edition Silver Arrow Edition		92089000	ø 290 x 10 x 57	⊖ ESP F125158→
				TPM0001				92064200	ø 300 x 22 x 57.5	⊕ ESP F125158→
								TPM0001		
								91032800	ø 164 x 20	
								97011600		
		424200	Ate	2115307	[o] 21153 17.5	⊖ ESP	Ate	2119701	[o] 21197 15	→F125157
500 (129.067)	09/92→10/01	235 / 320	Bre	2327102	[o] 23271 17.7	⊕ ESP	Ate	2130503	[o] 21305 16	F125158→
			Bre	2327181	[o] 23271 17.7	⊕ ESP	Ate	2130581	[o] 21305 15.5	F125158→
				98013500	L94			98013500	L94	
			Bre	82500600		⊕ ESP	Ate	82046000		
				92057900	ø 300 x 28 x 45.5			92089000	ø 290 x 10 x 57	⊖ ESP →F103936
				92064000	ø 320 x 30 x 50.5	left		92064200	ø 300 x 22 x 57.5	
				92064100	ø 320 x 30 x 50.5	right		92123900	ø 300 x 22 x 57.5	⊕ Silver Arrow Edition ⊕ USA
				92123800	ø 334 x 32 x 51.5	⊕ Silver Arrow Edition ⊕ USA		TPM0001		
				TPM0001				91032800	ø 164 x 20	
								97011600		
		424300	Ate	2115307	[o] 21153 17.5	⊖ ESP	Ate	2119701	[o] 21197 15	→F125157
500 (129.068)	05/98→10/01	225 / 306	Bre	2327102	[o] 23271 17.7	⊕ ESP	Ate	2130503	[o] 21305 16	F125158→
			Bre	2327181	[o] 23271 17.7	⊕ ESP	Ate	2130581	[o] 21305 15.5	F125158→
				98013500	L94			98013500	L94	
			Bre	82500600		⊕ ESP	Ate	82046000		
				92123800	ø 334 x 32 x 51.5	⊕ SL-Edition Silver Arrow Edition		92089000	ø 290 x 10 x 57	⊖ ESP →F103936
				TPM0001				92064200	ø 300 x 22 x 57.5	
								92123900	ø 300 x 22 x 57.5	⊕ Silver Arrow Edition ⊕ USA
								TPM0001		
								91032800	ø 164 x 20	

→

		kW / hp											
SL (R129) 07/92→12/01													
		424300											
500 (129.068)	05/98→10/01	225 / 306								97011600			
		424400	Ate		2115307	[o] 21153 17.5			Ate	2130503	[o] 21305 16		
55 AMG	08/99→07/01	350 / 476			98013500	L94			Ate	2130581	[o] 21305 15.5		
55 AMG	03/00→10/01	260 / 354			92064000	ø 320 x 30 x 50.5	left			98013500	L94		
60 AMG (129.067)	05/97→10/01	280 / 381			92064100	ø 320 x 30 x 50.5	right		Ate	82046000			
					92123800	ø 334 x 32 x 51.5				92064200	ø 300 x 22 x 57.5		
					TPM0001					92123900	ø 300 x 22 x 57.5		
										TPM0001			
										91032800	ø 164 x 20		
										97011600			
		424500	Ate		2115307	[o] 21153 17.5			Ate	2130503	[o] 21305 16		
600 (129.076)	07/92→10/01	290 / 394			98013500	L94			Ate	2130581	[o] 21305 15.5		
					92064000	ø 320 x 30 x 50.5	left →06/98			98013500	L94		
					92064100	ø 320 x 30 x 50.5	right →06/98		Ate	82046000			
					92123800	ø 334 x 32 x 51.5	06/98→ ⊕ SL-Edition Silver Arrow Edition			92064200	ø 300 x 22 x 57.5		
					TPM0001					92123900	ø 300 x 22 x 57.5		
										TPM0001			
										91032800	ø 164 x 20		
										97011600			
		424600	Bre		2327102	[o] 23271 17.7			Ate	2130581	[o] 21305 15.5		
SL 500	09/98→12/01	225 / 306	Bre		2327181	[o] 23271 17.7				98021301	L90		
					98013500	L94			Ate	82046000			
			Bre		82504800					92064200	ø 300 x 22 x 57.5	⊖ Silver Arrow Edition	
					92123800	ø 334 x 32 x 51.5	⊕ Silver Arrow Edition			92123900	ø 300 x 22 x 57.5	⊕ Silver Arrow Edition	
					TPM0001					TPM0001			
										91032800	ø 164 x 20		
		424700	Bre		2327102	[o] 23271 17.7			Ate	2130504	[o] 21305 15.5		
SL 73 AMG (129.076)	01/99→12/01	385 / 524	Bre		2327181	[o] 23271 17.7			Ate	2130581	[o] 21305 15.5		
					98013500	L94			Ate	82046000			
			Bre		82504800					92064200	ø 300 x 22 x 57.5		
					92123800	ø 334 x 32 x 51.5				TPM0001			
					TPM0001					91032800	ø 164 x 20		
SL (R230) 10/01→01/12													
		424800	Bre		2374502	[o] 23745 17.7	⊖ sport pack.		Ate	2333403	[o] 23334 16.8		
280	03/08→01/12	170 / 231											
300	04/09→01/12	170 / 231	Bre		2374581	[o] 23745 17.7	⊖ sport pack.		Ate	2333481	[o] 23334 16.8		
350	04/08→01/12	232 / 316	Bre		2396001	[o] 23960 17.8	⊕ sport pack.			98024701	L95	⊖ sport pack.	
			Bre		2396081	[o] 23960 17.8	⊕ sport pack.			98036401	L98	⊕ sport pack.	
					98024701	L95	⊖ sport pack.		Ate	82062900			
					98036401	L98	⊕ sport pack.		Ate	82076400			
			Bre		82504000		⊕ sport pack.			92176503	ø 300 x 12 x 56		

		kW / hp											
SL (R230) 10/01→01/12													
		424800	Bre		**82504800**		⊖ sport pack.			**TPM0002**		
280	03/08→01/12	170 / 231		PRO	**92120203**	ø 330 x 32 x 64.5	⊖ sport pack.			**91058800**	ø 180 x 25	
300	04/09→01/12	170 / 231		PRO	**92176403**	ø 350 x 32 x 64.5	⊕ sport pack.			**97035400**		
350	04/08→01/12	232 / 316			**TPM0002**							
		424900	Bre		**2374502**	[o] 23745 17.7	⊖ sport pack.	Ate		**2333403**	[o] 23334 16.8	
350	03/06→01/12	200 / 272	Bre	epad	**2374581**	[o] 23745 17.7	⊖ sport pack.	Ate	epad	**2333481**	[o] 23334 16.8	
			Bre		**2396001**	[o] 23960 17.8	⊕ sport pack. F132182→ 2007-05-01→			**98024701**	L95	⊖ sport pack.
			Bre	epad	**2396081**	[o] 23960 17.8	⊕ sport pack. F132182→ 2007-05-01→			**98036401**	L98	⊕ sport pack.
					98024701	L95	⊖ sport pack.	Ate		**82062900**		
					98036401	L98	⊕ sport pack.	Ate		**82076400**		
			Bre		**82500600**				PRO	**92176503**	ø 300 x 12 x 56	
					92120100	ø 312 x 28 x 64.5	⊖ sport pack.			**TPM0002**		
				PRO	**92176403**	ø 350 x 32 x 64.5	⊕ sport pack.			**91058800**	ø 180 x 25	
					TPM0002					**97035400**		
		425000	Bre		**2327102**	[o] 23271 17.7		Ate		**2333403**	[o] 23334 16.8	
350 (230.467)	03/03→01/12	180 / 245	Bre	epad	**2327181**	[o] 23271 17.7		Ate	epad	**2333481**	[o] 23334 16.8	
					98036401	L98	⊕ sport pack.			**98036401**	L98	⊕ sport pack.
			Bre		**82500600**			Ate		**82062900**		
					92120100	ø 312 x 28 x 64.5		Ate		**82076400**		
					TPM0002					**TPM0002**		
										91058800	ø 180 x 25	
										97035400		
		425100	Bre		**2327102**	[o] 23271 17.7	⊕ USA	Ate		**2333403**	[o] 23334 16.8	
500	03/06→01/12	285 / 388	Bre	epad	**2327181**	[o] 23271 17.7	⊕ USA	Ate	epad	**2333481**	[o] 23334 16.8	
			Bre		**2396001**	[o] 23960 17.8	⊖ USA			**98036401**	L98	⊕ sport pack.
			Bre	epad	**2396081**	[o] 23960 17.8	⊖ USA	Ate		**82062900**		
					98036401	L98	⊕ sport pack.	Ate		**82076400**		
			Bre		**82500600**		⊕ USA			**TPM0002**		
			Bre		**82504000**		⊖ USA			**91058800**	ø 180 x 25	
				PRO	**92120203**	ø 330 x 32 x 64.5	⊕ USA ⊖ sport pack.			**97035400**		
				PRO	**92176403**	ø 350 x 32 x 64.5	⊕ USA ⊕ sport pack.					
					TPM0002							
		425200	Bre		**2327102**	[o] 23271 17.7		Ate		**2333403**	[o] 23334 16.8	
500 (230.475)	10/01→01/12	225 / 306	Bre	epad	**2327181**	[o] 23271 17.7		Ate	epad	**2333481**	[o] 23334 16.8	
					98036401	L98	⊕ sport pack.			**98036401**	L98	⊕ sport pack.
			Bre		**82500600**			Ate		**82062900**		
				PRO	**92120203**	ø 330 x 32 x 64.5		Ate		**82076400**		
					TPM0002				PRO	**92176303**	ø 300 x 22 x 58.3	
										TPM0002		
										91058800	ø 180 x 25	

		kW / hp											
SL (R230) 10/01→01/12													
500 (230.475)	10/01→01/12	425200 225 / 306								97035400			
55 AMG	03/06→01/12	425300 380 / 517			98036401	L98	⊕ sport pack.	Bre		2447301	[–] 24473 14.8	
63 AMG (230.470)	03/08→01/12	386 / 525			TPM0002					98036401	L98	⊕ sport pack.
										92120400	ø 330 x 26 x 58.3	
										TPM0002		
										91058800	ø 180 x 25	
										97035400		
55 AMG (230.474)	10/01→06/02	425400 350 / 476	Bre		2394301	[o] 23943 17.5		Bre		2347801	[o] 23478 16.5	
600 (230.476)	04/03→01/12	368 / 500			98036401	L98	⊕ sport pack.			98036401	L98	⊕ sport pack.
			Bre		82075200					92120400	ø 330 x 26 x 58.3	
				PRO	92120303	ø 360 x 36 x 64.5	⊖ AMG sport pack.			TPM0002		
				PRO	92120305	ø 360 x 36 x 64.5	⊖ AMG sport pack.			91058800	ø 180 x 25	
					TPM0002					97035400		
55 AMG Kompressor (230.474)	06/02→01/12	425500 368 / 500	Bre		2394301	[o] 23943 17.5		Bre		2347801	[o] 23478 16.5	
					98036401	L98	⊕ sport pack.			98036401	L98	⊕ sport pack.
			Bre		82075200					92120400	ø 330 x 26 x 58.3	
				PRO	92120303	ø 360 x 36 x 64.5	⊖ AMG perf. pack.			TPM0002		
				PRO	92120305	ø 360 x 36 x 64.5	⊖ AMG perf. pack.			91058800	ø 180 x 25	
					TPM0002					97035400		
600	03/06→01/12	425600 380 / 517	Bre		2394301	[o] 23943 17.5		Bre		2347801	[o] 23478 16.5	
					98036401	L98	⊕ sport pack.			98036401	L98	⊕ sport pack.
			Bre		82075200					92120400	ø 330 x 26 x 58.3	
				PRO	92120303	ø 360 x 36 x 64.5	⊖ sport pack.			TPM0002		
				PRO	92120305	ø 360 x 36 x 64.5	⊖ sport pack.			91058800	ø 180 x 25	
				PRO	92176403	ø 350 x 32 x 64.5	⊕ AMG sport pack. →A253130 →07/08 ⊕ arm.veh.			97035400		
					TPM0002							
65 AMG (230.479)	03/04→01/12	425700 450 / 612	Bre		2394301	[o] 23943 17.5	⊖ AMG perf. pack. →F122820 →03/06	Bre		2447301	[–] 24473 14.8	
					98036401	L98	⊕ sport pack.	Bre		2347801	[o] 23478 16.5	⊕ sport pack.
			Bre		82075200		⊖ AMG perf. pack. →F122820 →03/06	Bre		2347802	[o] 23478 14.8	⊖ AMG perf. pack. →F122820 →03/06
					TPM0002					98036401	L98	⊕ sport pack.
										92120400	ø 330 x 26 x 58.3	⊕ sport pack.
										TPM0002		
										91058800	ø 180 x 25	
										97035400		
65 AMG Black Series (230.479)	07/08→01/12	425800 493 / 670	Bre		2394301	[o] 23943 17.5		Bre		2347801	[o] 23478 16.5	
					98036401	L98				98036401	L98	
			Bre		82075200					92120400	ø 330 x 26 x 58.3	
				PRO	92120303	ø 360 x 36 x 64.5				TPM0002		
				PRO	92120305	ø 360 x 36 x 64.5				91058800	ø 180 x 25	
					TPM0002					97035400		

I - M

		kW / hp												
SL (R230) 10/01→01/12														
425900			Bre		**2327102**	[o] 23271	17.7	F063165→ 2003-08-29→	Ate		**2333403**	[o] 23334	16.8	
SL 500	09/02→12/05	215 / 292	Bre	epad	**2327181**	[o] 23271	17.7	F063165→ 2003-08-29→	Ate	epad	**2333481**	[o] 23334	16.8	
			Bre		**2374502**	[o] 23745	17.7	→F063164 →2003-08-29			**98024701**	L95		⊖ AMG BLACK SERIES
			Bre	epad	**2374581**	[o] 23745	17.7	→F063164 →2003-08-29			**98036401**	L98		⊕ AMG BLACK SERIES
					98024701	L95			Ate		**82076400**			
					98036401	L98		⊕ USA		PRO	**92176303**	ø 300 x 22 x 58.3		→F063164 →2003-08-29
			Bre		**82504800**						**TPM0002**			
					92120100	ø 312 x 28 x 64.5		F063164→ 2003-08-29→ ⊕ USA			**91058800**	ø 180 x 25		
				PRO	**92120203**	ø 330 x 32 x 64.5		→F063164 →2003-08-29 ⊕ USA						
					TPM0002									
SL (R231) 09/11→														
426000			Bre		**2517901**	[o] 25179	17.8	⊕ AMG sport pack.	TRW		**2507101**	[o] 25071	18.8	⊕ AMG sport pack.
350 (231.457)	02/12→	225 / 306												
500 (231.473)	01/12→	320 / 435	Bre		**2518301**	[o] 25183	17.8	⊖ AMG sport pack.			**TPM0002**			
					98050400	L100								
			Bre		**82504000**			⊖ AMG sport pack.						
					TPM0002									
426100			Bre		**2517901**	[o] 25179	17.8	⊕ sport pack. ⊕ AMG sport pack. ⊕ Launch Edition	TRW		**2507101**	[o] 25071	18.8	
400 (231.465)	04/14→	245 / 333			**98050400**	L100					**98024701**	L95		
			Bre		**82504000**			⊖ sport pack. ⊖ AMG sport pack. ⊖ Launch Edition			**TPM0002**			
					TPM0002									
426200			Bre		**2517901**	[o] 25179	17.8	⊕ sport pack. ⊕ AMG sport pack. ⊕ HD Brakes	TRW		**2507101**	[o] 25071	18.8	
550	09/11→	324 / 441	Bre		**2518301**	[o] 25183	17.8	⊖ sport pack. ⊖ AMG sport pack. ⊖ HD Brakes →2012-11			**98024701**	L95		
					98050400	L100					**TPM0002**			
			Bre		**82504000**			⊖ sport pack. ⊖ AMG sport pack. ⊖ HD Brakes						
					TPM0002									
426300					**98036400**	L98					**TPM0002**			
63 AMG (231.474)	01/12→	395 / 537												
63 AMG (231.474)	01/12→	415 / 564			**TPM0002**									
426400					**98036401**	L98		right			**98024701**	L95		
63 AMG (231.474)	04/14→	430 / 585									**TPM0002**			
426500					**98036401**	L98		⊖ ceramic brake			**98024701**	L95		
65 AMG (231.479)	05/12→	463 / 630			**TPM0002**						**TPM0002**			
SLK (R170) 09/96→12/04														
426600			Ate		**2166404**	[o] 21664	19.8		Ate		**2191903**	[–] 21919	15.7	cal. + 1 holding pin F017688→
200 (170.435)	09/96→03/00	100 / 136												
200 Kompressor (170.445)	10/96→03/00	141 / 192	Ate	epad	**2166481**	[o] 21664	19.8		Ate		**2119701**	[o] 21197	15	cal. + 2 holding pins →F017687
230 Kompressor (170.447)	09/96→03/00	142 / 193			**98021300**	L90					**98021300**	L90		
			Ate		**82032000**						**98021301**	L90		
			Ate		**82062900**				Ate		**82032800**			cal. + 2 holding pins →F017687
				PRO	**92105903**	ø 288 x 25 x 46.5			Ate		**82058800**			cal. + 1 holding pin F017688→
					TPM0001					PRO	**92032703**	ø 278 x 9 x 53.5		
											TPM0001			

		kW / hp											
SLK (R170) 09/96→12/04													
		426600											
200 (170.435)	09/96→03/00	100 / 136											
200 Kompressor (170.445)	10/96→03/00	141 / 192											
230 Kompressor (170.447)	09/96→03/00	142 / 193											
											91032800	ø 164 x 20	
											97011600		
		426700	Ate		**2166404**	[o] 21664 19.8			Ate		**2191903**	[–] 21919 15.7	
200 Kompressor (170.444)	03/00→04/04	120 / 163											
230 Kompressor (170.449)	03/00→04/04	145 / 197	Ate		**2166481**	[o] 21664 19.8					**98021300**	L90	
					98021301	L90					**98021301**	L90	
			Ate		**82032000**				Ate		**82058800**		
			Ate		**82062900**						**92032703**	ø 278 x 9 x 53.5	
					92105903	ø 288 x 25 x 46.5					**TPM0001**		
					TPM0001						**91032800**	ø 164 x 20	
											97011600		
		426800	Ate		**2166404**	[o] 21664 19.8			Ate		**2119701**	[o] 21197 15	
230	09/97→12/00	138 / 188											
230	09/00→12/04	143 / 194	Ate		**2166481**	[o] 21664 19.8					**92032703**	ø 278 x 9 x 53.5	
					98021300	L90					**TPM0001**		
			Ate		**82032000**						**91032800**	ø 164 x 20	
					92105903	ø 288 x 25 x 46.5							
					TPM0001								
		426900	Ate		**2167001**	[o] 21670 20.3			Ate		**2191903**	[–] 21919 15.7	
320 (170.465)	03/00→04/04	160 / 218											
			Ate		**2167081**	[o] 21670 20.3					**98021300**	L90	
					98021301	L90					**98021301**	L90	
			Ate		**82032000**				Ate		**82058800**		
			Ate		**82062900**						**92032703**	ø 278 x 9 x 53.5	
					92106003	ø 300 x 28 x 46.5					**TPM0001**		
					92106005	ø 300 x 28 x 46.5					**91032800**	ø 164 x 20	
					TPM0001						**97011600**		
		427000	Ate		**2148401**	[o] 21484 20.8			Ate		**2130504**	[o] 21305 15.5	
32 AMG Kompressor (170.466)	03/01→04/04	260 / 354							Ate		**2130581**	[o] 21305 15.5	
					98021300	L90					**98021300**	L90	
					98021301	L90					**98021301**	L90	
			Ate		**82059200**								
					92181903	ø 330 x 32 x 47			Ate		**82032800**		
					TPM0001						**92137203**	ø 300 x 22 x 53.6	
											TPM0001		
											91032800	ø 164 x 20	
											97011600		
SLK (R171) 03/04→02/11													
		427100	Luc		**2314401**	[o] 23144 19.8	⊖ sport pack.		Ate		**2191901**	[–] 21919 15.3	⊖ sport pack.
200	09/09→12/10	91 / 124	Luc		**2314481**	[o] 23144 19.8	⊖ sport pack.		Ate		**2191981**	[–] 21919 15.3	⊖ sport pack.
			Bre		**2394501**	[o] 23945 16.5	⊕ sport pack.		Ate		**2189803**	[o] 21898 15.7	⊕ sport pack.
					98024701	L95			Ate		**2189881**	[o] 21898 15.7	⊕ sport pack.
			Bre		**82504800**						**92032703**	ø 278 x 9 x 53.5	⊖ sport pack.
					92105903	ø 288 x 25 x 46.5	⊖ sport pack.				**92072703**	ø 290 x 10 x 55.2	⊕ sport pack.

		kW / hp												
SLK (R171) 03/04→02/11														
427100														
200	09/09→12/10	91 / 124		PRO	92119803	ø 330 x 28 x 46.5	⊕ sport pack.			91057100	ø 164 x 20	
					TPM0002							
427200														
200 Kompressor (171.442)	03/04→02/11	120 / 163	Luc		2314401	[o] 23144 19.8	⊖ sport pack.	Ate		2191901	[–] 21919 15.3	⊖ sport pack.
			Luc	epad	2314481	[o] 23144 19.8	⊖ sport pack.	Ate	epad	2191981	[–] 21919 15.3	⊖ sport pack.
			Bre		2394501	[o] 23945 16.5	⊕ sport pack.	Ate		2189803	[o] 21898 15.7	⊕ sport pack.
			Luc		82055400		⊖ sport pack.	Ate	epad	2189881	[o] 21898 15.7	⊕ sport pack.
			Luc		82063500			Ate		82500000		⊖ sport pack.
				PRO	92105903	ø 288 x 25 x 46.5	⊖ sport pack.	Ate		82501300		⊕ sport pack.
				PRO	92119803	ø 330 x 28 x 46.5	⊕ sport pack.		PRO	92032703	ø 278 x 9 x 53.5	⊖ sport pack.
					TPM0002				PRO	92072703	ø 290 x 10 x 55.2	⊕ sport pack.
										TPM0002		
										91057100	ø 164 x 20	
427300														
200 Kompressor (171.445)	01/08→02/11	135 / 184	Luc		2314401	[o] 23144 19.8	⊖ sport pack.	Ate		2191901	[–] 21919 15.3	⊖ sport pack.
			Luc	epad	2314481	[o] 23144 19.8	⊖ sport pack.	Ate	epad	2191981	[–] 21919 15.3	⊖ sport pack.
			Bre		2394501	[o] 23945 16.5	⊕ sport pack.	Ate		2189803	[o] 21898 15.7	⊕ sport pack.
			Luc		82055400		⊖ sport pack.	Ate	epad	2189881	[o] 21898 15.7	⊕ sport pack.
			Bre		82075200		⊕ sport pack.	Ate		82500000		⊖ sport pack.
				PRO	92106003	ø 300 x 28 x 46.5	⊖ sport pack.	Ate		82501300		⊕ sport pack.
				PRO	92106005	ø 300 x 28 x 46.5	⊖ sport pack.		PRO	92032703	ø 278 x 9 x 53.5	⊖ sport pack.
				PRO	92119803	ø 330 x 28 x 46.5	⊕ sport pack.		PRO	92072703	ø 290 x 10 x 55.2	⊕ sport pack.
					TPM0002					TPM0002		
										91057100	ø 164 x 20	
427400														
280 (171.454)	01/05→02/11	170 / 231	Luc		2314402	[o] 23144 19.8	⊖ AMG sport pack.	Ate		2191901	[–] 21919 15.3	⊖ AMG sport pack.
300 (171.454)	04/09→02/11	170 / 231	Luc	epad	2314482	[o] 23144 19.8	⊖ AMG sport pack.	Ate	epad	2191981	[–] 21919 15.3	⊖ AMG sport pack.
			Bre		2394501	[o] 23945 16.5	⊕ AMG sport pack.	Ate		2189803	[o] 21898 15.7	⊕ AMG sport pack.
			Gir		82059500		⊖ AMG sport pack.	Ate	epad	2189881	[o] 21898 15.7	⊕ AMG sport pack.
			Bre		82075200		⊕ AMG sport pack.	Ate		82500000		⊖ AMG sport pack.
				PRO	92106003	ø 300 x 28 x 46.5	⊖ AMG sport pack.	Ate		82501300		⊕ AMG sport pack.
				PRO	92106005	ø 300 x 28 x 46.5	⊖ AMG sport pack.		PRO	92072703	ø 290 x 10 x 55.2	⊕ AMG sport pack.
				PRO	92119803	ø 330 x 28 x 46.5	⊕ AMG sport pack.			TPM0002		
					TPM0002							
427500														
350 (171.456)	06/04→02/11	200 / 272	Bre		2374502	[o] 23745 17.7	→F117328 ⊖ sport pack.	Ate		2191901	[–] 21919 15.3	⊕ J ⊕ AUS
			Bre	epad	2374581	[o] 23745 17.7	→F117328 ⊖ sport pack.	Ate	epad	2191981	[–] 21919 15.3	⊕ J ⊕ AUS
			Bre		2394501	[o] 23945 16.5	F117329→ ⊕ sport pack.	Ate		2189803	[o] 21898 15.7	⊖ J ⊖ AUS
			Bre		82075200		F117329→ ⊕ sport pack.	Ate	epad	2189881	[o] 21898 15.7	⊖ J ⊖ AUS
			Bre		82504700		→F117328 ⊖ sport pack.	Ate		82500000		⊕ J ⊕ AUS
			Luc		82063500			Ate		82501300		⊖ J ⊖ AUS
				PRO	92106003	ø 300 x 28 x 46.5	⊕ J ⊕ AUS		PRO	92032703	ø 278 x 9 x 53.5	⊕ J ⊕ AUS
				PRO	92106005	ø 300 x 28 x 46.5	⊕ J ⊕ AUS		PRO	92072703	ø 290 x 10 x 55.2	⊖ J ⊖ AUS
				PRO	92119803	ø 330 x 28 x 46.5	⊖ J ⊖ AUS			TPM0002		

		kW / hp											
SLK (R171) 03/04→02/11													
		427500			TPM0002					91057100	ø 164 x 20	
350 (171.456)	06/04→02/11	200 / 272											
		427600	Bre		2394501	[o] 23945 16.5		Ate		2189803	[o] 21898 15.7	
350 (171.458)	01/08→02/11	224 / 305	Bre		82075200			Ate		2189881	[o] 21898 15.7	
				PRO	92119803	ø 330 x 28 x 46.5	⊕ J ⊕ USA ⊕ AUS	Ate		82501300		
				PRO	92123703	ø 345 x 30 x 46.5	⊖ J ⊖ USA ⊖ AUS		PRO	92072703	ø 290 x 10 x 55.2	
					TPM0002					TPM0002		
										91057100	ø 164 x 20	
		427700	Bre		2374502	[o] 23745 17.7	⊖ AMG Black Series	Ate	epad	2130581	[o] 21305 15.5	⊕ AMG Black Series
55 AMG	09/04→12/05	260 / 354	Bre	epad	2374581	[o] 23745 17.7	⊖ AMG Black Series	Bre		2347802	[o] 23478 14.8	→F197201 →2008-03-31
			Bre		2395501	[o] 23955 17.5	⊕ AMG Black Series			98024701	L95	⊖ AMG Black Series
					98024701	L95	⊖ AMG Black Series			98036401	L98	⊕ AMG Black Series
					98036401	L98	⊕ AMG Black Series		PRO	92137203	ø 300 x 22 x 53.6	⊕ USA
			Bre		82075200		⊕ USA			TPM0002		
				PRO	92123703	ø 345 x 30 x 46.5	⊕ USA			91057100	ø 164 x 20	
					TPM0002							
		427800	Bre		2374502	[o] 23745 17.7	F177100→ 2007-09-30→ ⊕ Silver Arrow Edition ⊖ USA F153992→ 2007-01-13→ ⊕ USA	Bre		2447301	[–] 24473 14.8	→F197201 →2008-03-31 ⊖ USA →F172580 →2007-05-31 ⊕ USA
55 AMG (171.473)	06/04→02/11	265 / 360										
55 AMG (171.473)	06/06→02/11	294 / 400	Bre	epad	2374581	[o] 23745 17.7	F177100→ 2007-09-30→ ⊕ Silver Arrow Edition ⊖ USA F153992→ 2007-01-13→ ⊕ USA	Ate	epad	2130581	[o] 21305 15.5	F177100→ 2007-09-30→ ⊖ Silver Arrow Edition ⊖ USA F153992→ 2007-01-13→ ⊕ USA
					98024701	L95	F177100→ 2007-09-30→	Ate		2333403	[o] 23334 16.8	→F197201 →2008-03-31 ⊖ USA →F172580 →2007-05-31 ⊕ USA
					98036401	L98	→F197201 →2008-03-31 ⊕ AMG BLACK SERIES F177100→ 2007-09-30→ ⊕ SILVER ARROW EDITION	Ate	epad	2333481	[o] 23334 16.8	→F197201 →2008-03-31 ⊖ USA →F172580 →2007-05-31 ⊕ USA
			Bre		82075200		⊕ USA			98024701	L95	⊖ SILVER ARROW EDITION
				PRO	92123703	ø 345 x 30 x 46.5	F177100→ 2007-09-30→ ⊖ Silver Arrow Edition			98036401	L98	⊕ SILVER ARROW EDITION
					TPM0002				PRO	92137203	ø 300 x 22 x 53.6	F177230→ 2007-09-30→ ⊖ Silver Arrow Edition
										TPM0002		
										91057100	ø 164 x 20	
SLK (R172) 02/11→													
		427900	Luc		2430603	[o] 24306 20.6	⊖ sport pack. ⊖ AMG sport pack. ⊕ USA	TRW		2484801	[o] 24848 18.4	
200 (172.448)	02/11→	135 / 184										
250 (172.447)	02/11→	150 / 204	Luc		2431001	[o] 24310 19.4	⊕ sport pack. ⊕ AMG sport pack. ⊖ USA			TPM0002		
			Luc	epad	2431081	[o] 24310 19.4	⊕ sport pack. ⊕ AMG sport pack. ⊖ USA					
			Luc		82073300		⊖ sport pack. ⊖ AMG sport pack. ⊕ USA					
					92163500	ø 322 x 32 x 64.5	⊖ sport pack. ⊖ AMG sport pack.					
				PRO	92163203	ø 295 x 28 x 64.5	⊕ USA					
				PRO	92163503	ø 322 x 32 x 64.5	⊖ sport pack. ⊖ AMG sport pack.					
					TPM0002							
		428000	Luc		2431001	[o] 24310 19.4		TRW		2484801	[o] 24848 18.4	
250 CDI (172.403)	01/12→	150 / 204										
			Luc	epad	2431081	[o] 24310 19.4				TPM0002		
					92163500	ø 322 x 32 x 64.5	⊖ sport pack. ⊖ AMG sport pack.					
				PRO	92163503	ø 322 x 32 x 64.5	⊖ sport pack. ⊖ AMG sport pack.					

		kW / hp											
SLK (R172) 02/11→													
		428000			TPM0002								
250 CDI (172.403)	01/12→	150 / 204											
		428100	Luc		2431001	[o] 24310 19.4		TRW		2484801	[o] 24848 18.4		
350 (172.457)	02/11→	225 / 306	Luc	epad	2431081	[o] 24310 19.4				TPM0002			
					TPM0002								
		428200	Bre		2521901	[o] 25219 17.8	⊕ AMG perf. pack.	TRW		2521501	[o] 25215 18.7		
55 AMG	06/12→	314 / 427	Bre		2521902	[o] 25219 17.8	⊖ AMG perf. pack.			98024701	L95		
					98024701	L95				TPM0002			
					TPM0002								
		428300	Bre		2521901	[o] 25219 17.8	⊕ AMG sport pack. ⊕ USA ⊕ Silver Arrow Edition	TRW		2521501	[o] 25215 18.7		
55 AMG (172.475)	01/12→	310 / 422	Bre		2521902	[o] 25219 17.8	⊖ AMG sport pack. ⊖ USA ⊕ Silver Arrow Edition			TPM0002			
				PRO	92120303	ø 360 x 36 x 64.5	⊖ AMG sport pack. ⊖ USA ⊕ Silver Arrow Edition						
				PRO	92120305	ø 360 x 36 x 64.5	⊖ AMG sport pack. ⊖ USA ⊕ Silver Arrow Edition						
					TPM0002								
SLR (R199) 04/04→													
		428400	Bre		2415601	[o] 24156 17.1	⊕ rim size 19"	Bre		2347801	[o] 23478 16.5		
5.4 (199.376)	04/04→	460 / 626	Bre		2430901	[o] 24309 17.6	⊕ rim size 18"			TPM0002			
5.4 722 Edition	10/06→	478 / 650			98024700	L95	⊕ rim size 18"						
					TPM0002								
SLR ROADSTER (R199) 10/06→													
		428500	Bre		2415601	[o] 24156 17.1	⊕ rim size 19"	Bre		2347801	[o] 23478 16.5		
5.4	10/06→	478 / 650	Bre		2430901	[o] 24309 17.6	⊕ rim size 18"			TPM0002			
5.4	04/07→	460 / 626			98024700	L95	⊕ rim size 18"						
					TPM0002								
SLS AMG (C197) 03/10→													
		428600			98036401	L98				98036401	L98		
6.2	06/13→	464 / 631			TPM0002				PRO	92165003	ø 295 x 28 x 64.5	⊖ ceramic brake	
6.2 (197.377)	03/10→	420 / 571								TPM0002			
6.2 GT	06/13→	435 / 592											
GT (197.378)	10/12→	435 / 591											
SLS AMG Cabriolet (A197) 06/11→ → SLS AMG Convertible (A197), Page 688													
SLS AMG Convertible (A197) 06/11→													
		428700			98036401	L98				98036401	L98		
6.2 (197.477)	06/11→	420 / 571			TPM0002				PRO	92165003	ø 295 x 28 x 64.5	⊖ ceramic brake	
6.2 GT (197.478)	06/13→	435 / 592								TPM0002			
SLS AMG (197.377)	09/12→	441 / 600											
SPRINTER 2-t Box (901, 902) 02/95→05/06													
		428800	Ate		2399002	[+] 23990 20.7		Ate		2473901	[+] 24739 17.3		
208 CDI	04/00→05/06	60 / 82			98031700	L189				98018200	L210		
208 D	02/95→04/00	58 / 79	Ate		82058400			Ate		82057400			
208 D	10/96→04/00	60 / 82	Ate		82062900			Ate		82062900			
210 D	01/97→04/00	75 / 102		PRO	92131503	ø 276 x 22 x 77			PRO	92137503	ø 258 x 12 x 96.5		
211 CDI	04/00→05/06	80 / 109								91055100	ø 160 x 40		
212 D	02/95→04/00	90 / 122								97012300			
213 CDI	04/00→05/06	95 / 129											
214	02/95→05/06	105 / 143											
214 NGT	04/00→05/06	92 / 125											
216 CDI	04/00→05/06	115 / 156											
SPRINTER 2-t Bus (901, 902) 02/95→05/06													
		428900	Ate		2399002	[+] 23990 20.7		Ate		2473901	[+] 24739 17.3		
208 CDI	04/00→05/06	60 / 82											
208 D	02/95→04/00	58 / 79											

		kW / hp									
SPRINTER 2-t Bus (901, 902) 02/95→05/06											
210 D	03/97→04/00	75 / 102			98031700	L189				98018200	L210
211 CDI	04/00→05/06	80 / 109	Ate		82058400			Ate		82057400	
212 D	02/95→04/00	90 / 122									
213 CDI	04/00→05/06	95 / 129	Ate		82062900			Ate		82062900	
214	02/95→05/06	105 / 143									
214 NGT	04/00→05/06	92 / 125		PRO	92131503	ø 276 x 22 x 77			PRO	92137503	ø 258 x 12 x 96.5
216 CDI	04/00→05/06	115 / 156								91055100	ø 160 x 40
										97012300	
SPRINTER 2-t Kasten (901, 902) 02/95→05/06 → SPRINTER 2-t Box (901, 902), Page 688											
SPRINTER 2-t Platform/Chassis (901, 902) 01/95→05/06											
		429000	Ate		2399002	[+] 23990 20.7		Ate		2473901	[+] 24739 17.3
208 CDI	04/00→05/06	60 / 82			98031700	L189				98018200	L210
208 D	01/95→04/00	58 / 79	Ate		82058400			Ate		82057400	
208 D	09/96→04/00	60 / 82									
210 D	01/97→04/00	75 / 102	Ate		82062900			Ate		82062900	
211 CDI	04/00→05/06	80 / 109									
212 D	02/95→04/00	90 / 122		PRO	92131503	ø 276 x 22 x 77			PRO	92137503	ø 258 x 12 x 96.5
213 CDI	04/00→05/06	95 / 129								91055100	ø 160 x 40
214	02/95→05/06	105 / 143								97012300	
214 NGT	04/00→05/06	92 / 125									
216 CDI	04/00→05/06	115 / 156									
SPRINTER 2-t Pritsche/Fahrgestell (901, 902) 01/95→05/06 → SPRINTER 2-t Platform/Chassis (901, 902), Page 689											
SPRINTER 3,5-t Box (906) 06/06→											
		429100	Bre		2919202	[+] 29192 20.9		Bos		2919001	[+] 29190 19
309 CDI (906.631, 906.633, 906.635, 906.637)	06/06→	65 / 88			98033700	L103				98033800	L95
310 CDI (906.631, 906.633, 906.635, 906.637)	03/09→	70 / 95	Bre		82071000			Bos		82054200	
311 CDI (906.631, 906.633, 906.635, 906.637)	06/06→	80 / 109			93143200	ø 300 x 28 x 68.5				93143300	ø 298 x 16 x 71
311 CDI 4x4 (906.631, 906.633, 906.635, 906.637)	02/08→	80 / 109			TPM0002					TPM0002	
313 CDI (906.631, 906.633, 906.635, 906.637)	06/06→	95 / 129								91066800	ø 180 x 25
313 CDI (906.631, 906.633, 906.635, 906.637)	05/09→	95 / 129								97035600	
313 CDI 4x4 (906.631, 906.633, 906.635, 906.637)	05/09→	95 / 129									
315 CDI (906.631, 906.633, 906.635, 906.637)	06/06→	110 / 150									
315 CDI 4x4 (906.631, 906.633, 906.635, 906.637)	02/08→	110 / 150									
316 (906.663, 906.635)	09/08→	115 / 156									
316 CDI (906.631, 906.633, 906.635, 906.637)	03/09→	120 / 163									
316 CDI 4x4 (906.631, 906.633, 906.635, 906.637)	03/09→	120 / 163									
316 LGT (906.633, 906.635)	09/08→	115 / 156									
316 NGT (906.633, 906.635)	09/08→	115 / 156									
316 NGT (906.633, 906.635)	09/08→	115 / 156									
318 CDI (906.631, 906.633, 906.635, 906.637)	06/06→	135 / 184									
318 CDI 4x4 (906.631, 906.633, 906.635, 906.637)	02/08→	135 / 184									
319 CDI / BlueTEC (906.631, 906.633, 906.635, 906.637)	03/09→	140 / 190									
319 CDI / BlueTEC 4x4 (906.631, 906.633, 906.635, 906.637)	03/09→	140 / 190									
324 (906.633, 906.635, 906.637)	06/06→	190 / 258									
SPRINTER 3,5-t Bus (906) 06/06→											
		429200	Bre		2919202	[+] 29192 20.9		Bos		2919001	[+] 29190 19
310 CDI (906.731, 906.733, 906.735)	03/09→	70 / 95									

		kW / hp											
SPRINTER 3,5-t Bus (906) 06/06→													
311 CDI (906.731, 906.733, 906.735)	06/06→	80 / 109			98033700	L103				98033800	L95	
311 CDI 4x4 (906.731, 906.733, 906.735)	02/08→	80 / 109	Bre		82071000			Bos		82054200		
313 CDI (906.731, 906.733, 906.735)	08/11→	95 / 129			93143200	ø 300 x 28 x 68.5				93143300	ø 298 x 16 x 71	
313 CDI 4x4 (906.731, 906.733, 906.735)	08/11→	95 / 129			TPM0002					TPM0002		
315 CDI (906.731, 906.733, 906.735)	06/06→	110 / 150								91066800	ø 180 x 25	
315 CDI 4x4 (906.731, 906.733, 906.735)	02/08→	110 / 150								97035600		
316 (906.733, 906.735)	09/08→	115 / 156										
316 CDI (906.731, 906.733, 906.735)	08/11→	120 / 163										
316 CDI 4x4 (906.731, 906.733, 906.735)	08/11→	120 / 163										
316 LGT	09/08→	115 / 156										
316 NGT (906.733, 906.735)	09/08→	115 / 156										
318 CDI (906.731, 906.733, 906.735)	02/08→	135 / 184										
318 CDI 4x4 (906.731, 906.733, 906.735)	02/08→	135 / 184										
319 CDI / BlueTEC (906.731, 906.733, 906.735)	03/09→	140 / 190										
319 CDI / BlueTEC 4x4 (906.731, 906.733, 906.735)	03/09→	140 / 190										
324 (906.733, 906.735)	06/06→	190 / 258										

SPRINTER 3,5-t Kasten (906) 06/06→ → SPRINTER 3,5-t Box (906), Page 689

SPRINTER 3,5-t Platform/Chassis (906) 06/06→

		429300										
309 CDI (906.131, 906.133, 906.135, 906.231, 906.233...)	06/06→	65 / 88	Bre	2919202	[+] 29192 20.9		Bos	2919001	[+] 29190 19	
310 CDI (906.131, 906.133, 906.135, 906.231, 906.233...)	03/09→	70 / 95		98033700	L103			98033800	L95	
311 CDI (906.131, 906.133, 906.135, 906.231, 906.233...)	06/06→	80 / 109	Bre	82071000			Bos	82054200		
311 CDI 4x4 (906.131, 906.133, 906.135, 906.231...)	02/08→	80 / 109		93143200	ø 300 x 28 x 68.5			93143300	ø 298 x 16 x 71	
313 CDI (906.131, 906.133, 906.135, 906.231, 906.233...)	06/06→	95 / 129		TPM0002				TPM0002		
313 CDI (906.131, 906.133, 906.135, 906.231, 906.233...)	06/06→	95 / 129						91066800	ø 180 x 25	
313 CDI 4x4 (906.131, 906.133, 906.135, 906.231...)	06/06→	95 / 129						97035600		
315 CDI (906.131, 906.133, 906.135, 906.231, 906.233...)	06/06→	110 / 150								
315 CDI 4x4 (906.131, 906.133, 906.135, 906.231...)	02/08→	110 / 150								
316 (906.133, 906.135, 906.233, 906.235)	09/08→	115 / 156								
316 CDI (906.131, 906.133, 906.135, 906.231, 906.233...)	03/09→	120 / 163								
316 CDI 4x4 (906.131, 906.133, 906.135, 906.231...)	03/09→	120 / 163								
316 LGT (906.133, 906.135, 906.233, 906.235)	09/08→	115 / 156								
316 NGT (906.133, 906.135, 906.233, 906.235)	09/08→	115 / 156								
316 NGT (906.133, 906.135, 906.233, 906.235)	09/08→	115 / 156								
318 CDI (906.131, 906.133, 906.135, 906.231, 906.233...)	06/06→	135 / 184								
318 CDI 4x4 (906.131, 906.133, 906.135, 906.231...)	02/08→	135 / 184								
319 CDI / BlueTEC (906.131, 906.133, 906.135, 906.231...)	03/09→	140 / 190								
319 CDI / BlueTEC 4x4 (906.131, 906.133, 906.135...)	05/11→	140 / 190								
324 (906.133, 906.135, 906.233, 906.235)	06/06→	190 / 258								

SPRINTER 3,5-t Pritsche/Fahrgestell (906) 06/06→ → SPRINTER 3,5-t Platform/Chassis (906), Page 690

SPRINTER 3-t Box (903) 02/95→05/06

		429400								
2.3 D 4x4	06/97→12/99	58 / 79	Ate	2399002	[+] 23990 20.7		Bos	2302101	[o] 23021 18.9	Bosch
308 CDI	04/00→05/06	60 / 82								
308 D 2.3	02/95→04/00	58 / 79								

→

		kW / hp												
SPRINTER 3-t Box (903) 02/95→05/06														
308 D 2.3	02/95→04/00	60 / 82		98031700	L189		Ate	2390101	[+] 23901 18.8	Teves
310 D 2.9	02/95→04/00	75 / 102								
311 CDI	04/00→05/06	80 / 109								
311 CDI 4x4	08/02→05/06	80 / 109	Ate	82058400				98018200	L210	Bosch
312 D	10/99→05/01	77 / 105								
312 D 2.9	02/95→04/00	90 / 122	Ate	82062900				98031700	L189	Teves
312 D 2.9 4x4	05/97→08/02	90 / 122								
313 CDI	04/00→05/06	95 / 129								
313 CDI 4x4	08/02→05/06	95 / 129		93127800	ø 285 x 22 x 72	⊕ axle BM 730.415	Bos	82061400		Bosch
314	02/95→05/06	105 / 143								
314 4x4	08/02→05/06	105 / 143		92131503	ø 276 x 22 x 77	⊖ axle BM 730.415	Ate	82058400		Teves
314 NGT	04/00→05/06	92 / 125								
316 CDI	04/00→05/06	115 / 156					Ate	82062900		
316 CDI 4x4	08/02→05/06	115 / 156								
								92137603	ø 272 x 16 x 96.7	
								91055100	ø 160 x 40	
								97012300		
		429500	Ate	2399002	[+] 23990 20.7		Bos	2302101	[o] 23021 18.9	Bosch
310 D 2.9 4x4	06/97→04/00	75 / 102								
				98031700	L189		Ate	2390101	[+] 23901 18.8	Teves
			Ate	82058400				98018200	L210	Bosch
				93127800	ø 285 x 22 x 72	⊕ axle BM 730.415		98031700	L189	Teves
				92131503	ø 276 x 22 x 77	⊖ axle BM 730.415	Bos	82061400		Bosch
							Ate	82058400		Teves
								92137603	ø 272 x 16 x 96.7	
								91055100	ø 160 x 40	
								97012300		
SPRINTER 3-t Box (906) 06/06→														
		429600	Bre	2919202	[+] 29192 20.9		Bos	2919001	[+] 29190 19	
209 CDI (906.611, 906.613)	06/06→	65 / 88								
210 CDI (906.611, 906.613)	03/09→	70 / 95		98033700	L103			98033800	L95	
211 CDI (906.611, 906.613)	06/06→	80 / 109								
213 CDI (906.611, 906.613)	06/06→	95 / 129	Bre	82071000			Bos	82054200		
213 CDI (906.611, 906.613)	06/06→	95 / 129								
215 CDI (906.611, 906.613)	06/06→	110 / 150		93143200	ø 300 x 28 x 68.5			93143300	ø 298 x 16 x 71	
216 (906.613)	09/08→	115 / 156								
216 CDI (906.611, 906.613)	03/09→	120 / 163		TPM0002				TPM0002		
218 CDI (906.611, 906.613)	06/06→	135 / 184								
219 CDI / BlueTEC (906.611, 906.613)	03/09→	140 / 190						91066800	ø 180 x 25	
224 (906.613)	06/06→	190 / 258						97035600		
SPRINTER 3-t Bus (903) 02/95→05/06														
		429700	Ate	2399002	[+] 23990 20.7		Bos	2302101	[o] 23021 18.9	Bosch
2.3 D 4x4	06/97→12/99	58 / 79								
2.9 TDi	01/97→12/99	75 / 102		98031700	L189		Ate	2390101	[+] 23901 18.8	Teves
308 CDI	04/00→05/06	60 / 82								
308 D	02/95→04/00	58 / 79	Ate	82058400				98018200	L210	Bosch
308 D (903.371, 903.372, 903.373)	03/97→04/00	60 / 82								
308 E	04/00→05/06	40 / 54	Ate	82062900				98031700	L189	Teves
310 D 4x4	05/97→08/02	75 / 102								
311 CDI	04/00→05/06	80 / 109								
311 CDI 4x4	08/02→05/06	80 / 109		93127800	ø 285 x 22 x 72	⊕ axle BM 730.415	Bos	82061400		Bosch
312 D 2.9	02/95→04/00	90 / 122								
312 D 2.9 4x4	05/97→08/02	90 / 122		92131503	ø 276 x 22 x 77	⊖ axle BM 730.415	Ate	82058400		Teves
313 CDI	04/00→05/06	95 / 129								
313 CDI 4x4	08/02→05/06	95 / 129					Ate	82062900		
314	02/95→05/06	105 / 143								
314 4x4	08/02→05/06	105 / 143						92137603	ø 272 x 16 x 96.7	
314 NGT	04/00→05/06	92 / 125								
316 CDI	04/00→05/06	115 / 156						91055100	ø 160 x 40	
316 CDI 4x4	08/02→05/06	115 / 156								
								97012300		
SPRINTER 3-t Bus (906) 06/06→														
		429800	Bre	2919202	[+] 29192 20.9		Bos	2919001	[+] 29190 19	
210 CDI (906.711, 906.713)	03/09→	70 / 95								
211 CDI (906.711, 906.713)	06/06→	80 / 109		98033700	L103			98033800	L95	
213 CDI (906.711, 906.713)	06/06→	95 / 129								
215 CDI (906.711, 906.713)	06/06→	110 / 150	Bre	82071000			Bos	82054200		
216 (906.713)	09/08→	115 / 156								
216 CDI (906.711, 906.713)	06/06→	120 / 163								

kW / hp													
SPRINTER 3-t Bus (906) 06/06→													
224 (906.713)	06/06→	190 / 258		93143200	ø 300 x 28 x 68.5			93143300	ø 298 x 16 x 71	
				TPM0002				TPM0002		
								91066800	ø 180 x 25	
								97035600		
SPRINTER 3-t Kasten (903) 02/95→05/06 → SPRINTER 3-t Box (903), Page 690										
SPRINTER 3-t Kasten (906) 06/06→ → SPRINTER 3-t Box (906), Page 691										
SPRINTER 3-t Platform/Chassis (903) 02/95→05/06										
		429900	Ate	2399002	[+] 23990 20.7		Bos	2302101	[o] 23021 18.9	Bosch
308 CDI	04/00→05/06	60 / 82								
308 D 2.3	02/95→04/00	58 / 79		98031700	L189		Ate	2390101	[+] 23901 18.8	Teves
308 D 2.3	11/96→04/00	60 / 82								
310 D	09/96→05/01	70 / 95								
310 D 2.9	01/97→04/00	75 / 102	Ate	82058400				98018200	L210	Bosch
311 CDI	04/00→05/06	80 / 109								
311 CDI 4x4	08/02→05/06	80 / 109								
312 D 2.9	02/95→04/00	90 / 122	Ate	82062900				98031700	L189	Teves
312 D 2.9 (903.411, 903.412, 903.413, 903.421, 903.422...)	12/98→09/01	85 / 116		93127800	ø 285 x 22 x 72	⊕ axle BM 730.415	Bos	82061400		Bosch
313 CDI	04/00→05/06	95 / 129								
313 CDI 4x4	08/02→05/06	95 / 129		PRO 92131503	ø 276 x 22 x 77	⊖ axle BM 730.415	Ate	82058400		Teves
314	02/95→05/06	105 / 143								
314 4x4	08/02→05/06	105 / 143					Ate	82062900		
314 NGT	04/00→05/06	92 / 125								
316 CDI	04/00→05/06	115 / 156						PRO 92137603	ø 272 x 16 x 96.7	
316 CDI 4x4	08/02→05/06	115 / 156						91055100	ø 160 x 40	
								97012300		
SPRINTER 3-t Platform/Chassis (906) 06/06→										
		430000	Bre	2919202	[+] 29192 20.9		Bos	2919001	[+] 29190 19	
209 CDI (906.111, 906.113, 906.211, 906.213)	06/06→	65 / 88								
				98033700	L103			98033800	L95	
210 CDI (906.111, 906.113, 906.211, 906.213)	03/09→	70 / 95	Bre	82071000			Bos	82054200		
211 CDI (906.111, 906.113, 906.211, 906.213)	06/06→	80 / 109		93143200	ø 300 x 28 x 68.5			93143300	ø 298 x 16 x 71	
213 CDI (906.111, 906.113, 906.211, 906.213)	06/06→	95 / 129		TPM0002				TPM0002		
213 CDI (906.111, 906.113, 906.211, 906.213)	03/09→	95 / 129						91066800	ø 180 x 25	
215 CDI (906.111, 906.113, 906.211, 906.213)	06/06→	110 / 150						97035600		
216 (906.113, 906.213)	09/08→	115 / 156								
216 CDI (906.111, 906.113, 906.211, 906.213)	03/09→	120 / 163								
218 CDI (906.111, 906.113, 906.211, 906.213)	06/06→	135 / 184								
219 CDI / BlueTEC (906.111, 906.113, 906.211, 906.213)	03/09→	140 / 190								
224 (906.113, 906.213)	06/06→	190 / 258								
SPRINTER 3-t Pritsche/Fahrgestell (903) 02/95→05/06 → SPRINTER 3-t Platform/Chassis (903), Page 692										
SPRINTER 3-t Pritsche/Fahrgestell (906) 06/06→ → SPRINTER 3-t Platform/Chassis (906), Page 692										
SPRINTER 4,6-t Box (906) 06/06→										
		430100	Bre	2920002	[o] 29200 20.9		Bos	2921702	[o] 29217 20.6	⊖ axle BM 741.412 vented disc
411 CDI (906.653, 906.655, 906.657)	06/09→	80 / 109								
				98033700	L103		Bos	2919001	[+] 29190 19	⊕ axle BM 741.412 solid disc
413 CDI (906.653, 906.655, 906.657)	06/06→	95 / 129								
415 CDI (906.653, 906.655, 906.657)	06/09→	110 / 150	Bre	82071000				98033800	L95	⊕ axle BM 741.412 solid disc
416 CDI (906.653, 906.655, 906.657)	03/09→	120 / 163						98036500	L85	⊕ axle BM 741.412 vented disc
				93143200	ø 300 x 28 x 68.5					
418 CDI (906.653, 906.655, 906.657)	06/09→	135 / 184								
419 CDI (906.653, 906.655, 906.657)	03/09→	140 / 190		TPM0002			Bos	82054200		
424 (906.953, 906.655, 906.657)	06/06→	190 / 258						93143300	ø 298 x 16 x 71	
								93143400	ø 303 x 28 x 93	
								TPM0002		

		kW / hp											
SPRINTER 4,6-t Box (906) 06/06→													
		430100											
411 CDI (906.653, 906.655, 906.657)	06/09→	80 / 109											
413 CDI (906.653, 906.655, 906.657)	06/06→	95 / 129								91066800	ø 180 x 25	⊕ axle BM 741.412 solid disc	
415 CDI (906.653, 906.655, 906.657)	06/09→	110 / 150								91069000	ø 172 x 42	⊖ axle BM 741.412 vented disc	
416 CDI (906.653, 906.655, 906.657)	03/09→	120 / 163								97035600		⊕ axle BM 741.412 solid disc	
418 CDI (906.653, 906.655, 906.657)	06/09→	135 / 184							Ate	97039500		⊖ axle BM 741.412 vented disc	
419 CDI (906.653, 906.655, 906.657)	03/09→	140 / 190											
424 (906.953, 906.655, 906.657)	06/06→	190 / 258											
SPRINTER 4,6-t Bus 06/06→													
		430200	Bre	2920002	[o] 29200 20.9				Bos	2921702	[o] 29217 20.6		
415 CDI	06/06→	110 / 150		98033700	L103					98036500	L85		
				93143200	ø 300 x 28 x 68.5					93143400	ø 303 x 28 x 93		
				TPM0002						91069000	ø 172 x 42		
SPRINTER 4,6-t Kasten (906) 06/06→ → SPRINTER 4,6-t Box (906), Page 692													
SPRINTER 4,6-t Platform/Chassis (906) 06/06→													
		430300	Bre	2920002	[o] 29200 20.9				Bos	2921702	[o] 29217 20.6	⊖ axle BM 741.412 vented disc	
411 CDI (906.153, 906.155, 906.253, 906.255)	06/09→	80 / 109		98033700	L103				Bos	2919001	[+] 29190 19	⊕ axle BM 741.412 solid disc	
413 CDI (906.153, 906.155, 906.253, 906.255)	06/06→	95 / 129	Bre	82071000						98033800	L95	⊕ axle BM 741.412 solid disc	
416 CDI (906.153, 906.155, 906.253, 906.255)	03/09→	120 / 163		93143200	ø 300 x 28 x 68.5					98036500	L85	⊕ axle BM 741.412 vented disc	
418 CDI (906.153, 906.155, 906.253, 906.255)	06/06→	135 / 184		TPM0002					Bos	82054200			
419 CDI (906.153, 906.155, 906.253, 906.255)	03/09→	140 / 190								93143300	ø 298 x 16 x 71		
424 (906.153, 906.155, 906.253, 906.255)	06/06→	190 / 258								93143400	ø 303 x 28 x 93		
										TPM0002			
										91066800	ø 180 x 25	⊕ axle BM 741.412 solid disc	
										91069000	ø 172 x 42	⊖ axle BM 741.412 vented disc	
										97035600		⊕ axle BM 741.412 solid disc	
									Ate	97039500		⊖ axle BM 741.412 vented disc	
		430400	Bre	2920002	[o] 29200 20.9				Bos	2921702	[o] 29217 20.6	⊖ axle BM 741.412 vented disc	
415 CDI (906.153, 906.155, 906.253, 906.255)	06/06→	110 / 150		98033700	L103				Bos	2919001	[+] 29190 19	⊕ axle BM 741.412 solid disc	
			Bre	82071000						98033800	L95	⊕ axle BM 741.412 solid disc	
				93143200	ø 300 x 28 x 68.5					98036500	L85	⊕ axle BM 741.412 vented disc	
				TPM0002						93143300	ø 298 x 16 x 71		
										93143400	ø 303 x 28 x 93		
										TPM0002			
										91066800	ø 180 x 25	⊕ axle BM 741.412 solid disc	
										91069000	ø 172 x 42	⊖ axle BM 741.412 vented disc	
										97035600		⊕ axle BM 741.412 solid disc	
									Ate	97039500		⊖ axle BM 741.412 vented disc	
SPRINTER 4,6-t Pritsche/Fahrgestell (906) 06/06→ → SPRINTER 4,6-t Platform/Chassis (906), Page 693													
SPRINTER 4-t Box (904) 02/96→05/06													
		430500	Per	2915301	[o] 29153 20				Per	2915301	[o] 29153 20		
2.3 D 4x4	06/97→12/99	58 / 79											
408 CDI	04/00→05/06	60 / 82		98031700	L189					98031700	L189		
408 D	02/96→05/06	58 / 79											
410 D	02/96→05/06	75 / 102											
410 D 4x4	05/97→05/06	75 / 102	Per	82059000					Per	82059000			
411 CDI	04/00→05/06	80 / 109											
411 CDI 4x4	04/00→05/06	80 / 109											
412 D	02/96→05/06	85 / 115											

SPRINTER 4-t Box (904) 02/96→05/06

412 D	02/96→05/06	90 / 122			82075000						82075000		
412 D 4x4	05/97→05/06	85 / 115											
412 D 4x4	05/97→05/06	90 / 122		PRO	92131503	ø 276 x 22 x 77			PRO	92089803	ø 285 x 22 x 93	
413 CDI	04/00→05/06	95 / 129								91057900	ø 170 x 40	
413 CDI 4x4	04/00→05/06	95 / 129								97012400		
414	02/96→05/06	105 / 143										
414 4x4	05/97→05/06	105 / 143										
414 D 4x4	05/97→05/06	90 / 122										
416 CDI	04/00→05/06	115 / 156										
416 CDI 4x4	04/00→05/06	115 / 156										

SPRINTER 4-t Bus (904) 02/96→05/06

		430600	Per		2915301	[o] 29153 20		Per		2915301	[o] 29153 20	
408 CDI	04/00→05/06	60 / 82			98031700	L189				98031700	L189	
411 CDI	04/00→05/06	80 / 109	Per		82059000			Per		82059000		
413 CDI	04/00→05/06	95 / 129			82075000					82075000		
414	02/96→05/06	105 / 143		PRO	92131503	ø 276 x 22 x 77			PRO	92089803	ø 285 x 22 x 93	
416 CDI	04/00→05/06	115 / 156								91057900	ø 170 x 40	
										97012400		

SPRINTER 4-t Kasten (904) 02/96→05/06 → SPRINTER 4-t Box (904), Page 693

SPRINTER 4-t Platform/Chassis (904) 02/96→05/06

		430700	Per		2915301	[o] 29153 20		Per		2915301	[o] 29153 20	
2.3 D 4x4	06/97→12/99	58 / 79			98031700	L189				98031700	L189	
408 CDI	04/00→05/06	60 / 82	Per		82059000			Per		82059000		
408 D	02/96→05/06	58 / 79			82075000					82075000		
410 D	02/96→05/06	75 / 102		PRO	92131503	ø 276 x 22 x 77			PRO	92089803	ø 285 x 22 x 93	
410 D 4x4	05/97→05/06	75 / 102								91057900	ø 170 x 40	
411 CDI	04/00→05/06	80 / 109								97012400		
411 CDI 4x4	04/00→05/06	80 / 109										
412 D	02/96→05/06	85 / 115										
412 D	02/96→05/06	90 / 122										
412 D	10/99→05/01	85 / 115										
412 D 4x4	05/97→05/06	85 / 115										
412 D 4x4	05/97→05/06	90 / 122										
413 CDI	04/00→05/06	95 / 129										
413 CDI 4x4	04/00→05/06	95 / 129										
414	02/96→05/06	105 / 143										
414 4x4	05/97→05/06	105 / 143										
416 CDI	04/00→05/06	115 / 156										
416 CDI 4x4	04/00→05/06	115 / 156										

SPRINTER 4-t Pritsche/Fahrgestell (904) 02/96→05/06 → SPRINTER 4-t Platform/Chassis (904), Page 694

SPRINTER 5-t Box (906) 06/06→

		430800	Bre		2920002	[o] 29200 20.9		Bos		2921702	[o] 29217 20.6	⊖ axle BM 741.412 vented disc
509 CDI (906.653, 906.655, 906.657)	06/06→	65 / 88			98033700	L103		Bos		2919001	[+] 29190 19	⊕ axle BM 741.412 solid disc
510 CDI (906.653, 906.655, 906.657)	03/09→	70 / 95	Bre		82071000					98033800	L95	⊕ axle BM 741.412 solid disc
511 CDI (906.653, 906.655, 906.657)	06/06→	80 / 109			93143200	ø 300 x 28 x 68.5				98036500	L85	⊕ axle BM 741.412 vented disc
513 CDI (906.653, 906.655, 906.657)	06/06→	95 / 129			TPM0002			Bos		82054200		
515 CDI (906.653, 906.655, 906.657)	06/06→	110 / 150								93143300	ø 298 x 16 x 71	
516 CDI (906.653, 906.655, 906.657)	03/09→	120 / 163								93143400	ø 303 x 28 x 93	
518 CDI (906.653, 906.655, 906.657)	06/06→	135 / 184								TPM0002		
519 CDI / BlueTEC (906.653, 906.655, 906.657)	03/09→	140 / 190								91066800	ø 180 x 25	⊕ axle BM 741.412 solid disc
524 (906.653, 906.655, 906.657)	06/06→	190 / 258								91069000	ø 172 x 42	⊖ axle BM 741.412 vented disc
										97035600		⊕ axle BM 741.412 solid disc
								Ate		97039500		⊖ axle BM 741.412 vented disc
		430900	Bre		2920002	[o] 29200 20.9		Bos		2921702	[o] 29217 20.6	
511 CDI 4x4 (906.653, 906.6355, 906.657)	06/06→	80 / 109			98033700	L103				98036500	L85	
513 CDI (906.653, 906.655, 906.657)	06/06→	95 / 129	Bre		82071000			Bos		82054200		
513 CDI 4x4 (906.653, 906.655, 906.657)	06/06→	95 / 129			93143200	ø 300 x 28 x 68.5				93143400	ø 303 x 28 x 93	
515 CDI 4x4 (906.653, 906.655, 906.657)	06/06→	110 / 150			TPM0002					TPM0002		
516 CDI 4x4 (906.653, 906.655, 906.657)	06/06→	120 / 163										
518 CDI 4x4 (906.653, 906.655, 906.657)	06/06→	135 / 184										

		kW / hp											
SPRINTER 5-t Box (906) 06/06→													
519 CDI / BlueTEC 4x4 (906.653, 906.655, 906.657)	03/09→	140 / 190								91069000	ø 172 x 42	
									Ate	97039500		
SPRINTER 5-t Bus 06/06→													
515 CDI	06/06→	431000 110 / 150	Bre	2920002	[o] 29200 20.9				Bos	2921702	[o] 29217 20.6	
				98033700	L103					98036500	L85	
				93143200	ø 300 x 28 x 68.5					93143400	ø 303 x 28 x 93	
				TPM0002						91069000	ø 172 x 42	
SPRINTER 5-t Kasten (906) 06/06→ → SPRINTER 5-t Box (906), Page 694													
SPRINTER 5-t Platform/Chassis (905) 04/01→05/06													
616 CDI (905.612, 905.613, 905.622, 905.623)	04/01→05/06	431100 115 / 156	Brembo PF 2.52 - brake	2923701	[o] 29237 19.9				Ate	2983506	[o] 29835 22	
										98026300		
				98012200					Ate	82502200		
			Bre	82501400						93191600	ø 304 x 30 x 115	
SPRINTER 5-t Platform/Chassis (906) 06/06→													
509 CDI (906.153, 906.155, 906.253, 906.255)	06/06→	431200 65 / 88	Bre	2920002	[o] 29200 20.9				Bos	2921702	[o] 29217 20.6	⊖ axle BM 741.412 vented disc
				98033700	L103				Bos	2919001	[+] 29190 19	⊕ axle BM 741.412 solid disc
510 CDI (906.153, 906.155, 906.253, 906.255)	03/09→	70 / 95	Bre	82071000						98033800	L95	⊕ axle BM 741.412 solid disc
511 CDI (906.153, 906.155, 906.253, 906.255)	06/06→	80 / 109		93143200	ø 300 x 28 x 68.5					98036500	L85	⊕ axle BM 741.412 vented disc
513 CDI (906.135, 906.155, 906.253, 906.255)	06/06→	95 / 129		TPM0002					Bos	82054200		
513 CDI 4x4 (906.135, 906.155, 906.253, 906.255)	05/11→	95 / 129								93143300	ø 298 x 16 x 71	
515 CDI (906.153, 906.155, 906.253, 906.255)	06/06→	110 / 150								93143400	ø 303 x 28 x 93	
516 (906.153, 906.155, 906.253, 906.255)	09/08→	115 / 156								TPM0002		
516 CDI 4x4 (906.153, 906.155, 906.255)	05/11→	120 / 163								91066800	ø 180 x 25	⊕ axle BM 741.412 solid disc
516 NGT (906.153, 906.155, 906.253, 906.255)	09/08→	115 / 156								91069000	ø 172 x 42	⊖ axle BM 741.412 vented disc
518 CDI (906.153, 906.155, 906.253, 906.255)	06/06→	135 / 184								97035600		⊕ axle BM 741.412 solid disc
519 CDI / BlueTEC (906.153, 906.155, 906.253, 906.255)	03/09→	140 / 190							Ate	97039500		⊖ axle BM 741.412 vented disc
524 (906.153, 906.155, 906.253, 906.255)	06/06→	190 / 258										
511 CDI 4x4 (906.135, 906.155, 906.253, 906.255)	06/06→	431300 80 / 109	Bre	2920002	[o] 29200 20.9				Bos	2921702	[o] 29217 20.6	
				98033700	L103					98036500	L85	
513 CDI (906.135, 906.155, 906.253, 906.255)	06/06→	95 / 129	Bre	82071000					Bos	82054200		
515 CDI 4x4 (906.153, 906.155, 906.253, 906.255)	06/06→	110 / 150		93143200	ø 300 x 28 x 68.5					93143400	ø 303 x 28 x 93	
518 CDI 4x4 (906.153, 906.155, 906.253, 906.255)	06/06→	135 / 184		TPM0002						TPM0002		
519 CDI / BlueTEC 4x4 (906.153, 906.155, 906.253, 906.255)	03/09→	140 / 190								91069000	ø 172 x 42	
									Ate	97039500		
516 CDI (906.153, 906.155, 906.253, 906.255)	03/09→	431400 120 / 163	Bre	2920002	[o] 29200 20.9				Bos	2921702	[o] 29217 20.6	⊖ axle BM 741.412 vented disc
				98033700	L103				Bos	2919001	[+] 29190 19	⊕ axle BM 741.412 solid disc
			Bre	82071000						98033800	L95	⊕ axle BM 741.412 solid disc
				93143200	ø 300 x 28 x 68.5					98036500	L85	⊕ axle BM 741.412 vented disc
				TPM0002					Bos	82054200		
				91066800	ø 180 x 25					93143300	ø 298 x 16 x 71	

		kW / hp											
SPRINTER 5-t Platform/Chassis (906) 06/06→													
431400													
516 CDI (906.153, 906.155, 906.253, 906.255)	03/09→	120 / 163								93143400	ø 303 x 28 x 93		
										TPM0002			
										91069000	ø 172 x 42	⊖ axle BM 741.412 vented disc	
										97035600		⊕ axle BM 741.412 solid disc	
									Ate	97039500		⊖ axle BM 741.412 vented disc	
431500			Bre		2920002	[o] 29200 20.9			Bos	2921702	[o] 29217 20.6		
516 NGT (906.153, 906.155, 906.253, 906.255)	09/08→	115 / 156			98033700	L103				98036500	L85		
					93143200	ø 300 x 28 x 68.5				93143400	ø 303 x 28 x 93		
										91069000	ø 172 x 42		
SPRINTER 5-t Pritsche/Fahrgestell (905) 04/01→05/06 → SPRINTER 5-t Platform/Chassis (905), Page 695													
SPRINTER 5-t Pritsche/Fahrgestell (906) 06/06→ → SPRINTER 5-t Platform/Chassis (906), Page 695													
SPRINTER CLASSIC 3,5-t Box (909) 09/13→													
431600			Per		2915301	[o] 29153 20			Bos	2302101	[o] 23021 18.9		
311 CDI (909.632, 909.633)	09/13→	80 / 109	Ate		2399002	[+] 23990 20.7			Ate	2390101	[+] 23901 18.8		
					98031700	L189				98018200	L210	BOSCH -brake	
					82075000					98031700	L189	TEVES -brake	
				PRO	92131503	ø 276 x 22 x 77			Ate	82058400			
										PRO 92137603	ø 272 x 16 x 96.7		
SPRINTER CLASSIC 3,5-t Kasten (909) 09/13→ → SPRINTER CLASSIC 3,5-t Box (909), Page 696													
SPRINTER CLASSIC 4,6-t Bus (909) 09/13→													
431700			Per		2915301	[o] 29153 20			Bos	2302101	[o] 23021 18.9		
411 CDI (909.843)	09/13→	80 / 109			98031700	L189			Ate	2390101	[+] 23901 18.8		
					82075000					98018200	L210	BOSCH -brake	
				PRO	92131503	ø 276 x 22 x 77				98031700	L189	TEVES -brake	
									Ate	82058400			
										PRO 92137603	ø 272 x 16 x 96.7		
SPRINTER Dumptruck (905) 04/01→													
431800			Brembo PF 2.52 - brake		2923701	[o] 29237 19.9			Ate	2983506	[o] 29835 22		
616 CDI (905.612, 905.622, 905.623)	04/01→	115 / 156			98012200					98026300			
			Bre		82501400				Ate	82502200			
										93191600	ø 304 x 30 x 115		
SPRINTER Kipper (905) 04/01→ → SPRINTER Dumptruck (905), Page 696													
VANEO (414) 02/02→07/05													
431900			Luc		2307005	[+] 23070 19			Luc	2313803	[–] 23138 14.6		
1.4	06/02→07/05	60 / 82											
1.6 (414.700)	02/02→07/05	60 / 82											
1.6 (414.700)	02/02→07/05	75 / 102	Luc		82061800				Luc	82060300			
1.7 CDI (414.700)	02/02→07/05	55 / 75											
1.7 CDI (414.700)	02/02→07/05	67 / 91	Luc		82063500					PRO 92099703	ø 258 x 8 x 55.3		
1.9 (414.700)	02/02→07/05	92 / 125		PRO	92124503	ø 270 x 22 x 35.5				TPM0002			
					TPM0002					91057100	ø 164 x 20		
										97011600			
VARIO Box Body / Estate 09/96→													
432000			Per		2915301	[o] 29153 20			Per	2915301	[o] 29153 20	2x	
512 D (667.351, 667.352, 667.353)	09/96→	90 / 122			98031700	L189				98031700	L189		

→

		kW / hp										
VARIO Box Body / Estate 09/96→												
432000				82075000					82075000		2x
512 D (667.351, 667.352, 667.353)	09/96→	90 / 122	PRO	92131503	ø 276 x 22 x 77			PRO	92089803	ø 285 x 22 x 93	
432100			Ate	2983506	[o] 29835 22		Ate		2983506	[o] 29835 22	
612 D (668.351, 668.352, 668.353)	09/96→	90 / 122		98012200					98026300		
				98022000					98026400		
			Ate	82502200			Ate		82502200		
				93087400	ø 304 x 30 x 91				93087500	ø 304 x 30 x 120.5	⊕ ohne Umformachse
									93191400	ø 304 x 30 x 121	P353505→
									93191500	ø 324 x 30 x 121	⊕ mit Umformachse
432200			Ate	2983506	[o] 29835 22		Ate		2983506	[o] 29835 22	
613 D, 614 D (668.351, 668.352, 668.353)	09/96→	95 / 129		98012200					98026300		
613 D, 614 D (668.351, 668.352, 668.353)	09/96→	100 / 136		98022000					98026400		
615 D, 616 D (668.351, 668.352, 668.353)	09/98→	112 / 152									
615 D, 616 D (668.351, 668.352, 668.353)	09/98→	115 / 156	Ate	82502200			Ate		82502200		
813 D, 814 D (670.351, 670.352, 670.353)	09/96→	95 / 129		93087600	ø 324 x 30 x 91				93087500	ø 304 x 30 x 120.5	⊕ ohne Umformachse
813 D, 814 D (670.351, 670.352, 670.353)	09/96→	100 / 136							93087700	ø 324 x 30 x 120.5	
813 DA, 814 DA 4x4 (669.599, 670.451, 670.452, 670.453)	09/96→	95 / 129							93191400	ø 304 x 30 x 121	P353505→
813 DA, 814 DA 4x4 (669.599, 670.451, 670.452, 670.453)	09/96→	100 / 136							93191500	ø 324 x 30 x 121	⊕ mit Umformachse
815 D, 816 D (670.351, 670.352, 670.353)	09/96→	112 / 152									
815 D, 816 D (670.351, 670.352, 670.353)	09/96→	115 / 156									
815 DA, 816 DA 4x4 (669.599, 670.451, 670.452, 670.453)	09/96→	112 / 152									
815 DA, 816 DA 4x4 (669.599, 670.451, 670.452, 670.453)	09/96→	115 / 156									
432300			Ate	2983506	[o] 29835 22		Ate		2983506	[o] 29835 22	
618 D	09/06→	130 / 177					Ate		82502200		
818 D (670.351, 670.352, 670.353)	09/06→	130 / 177		98012200					93087500	ø 304 x 30 x 120.5	⊕ ohne Umformachse
				98022000					93191400	ø 304 x 30 x 121	P353505→
			Ate	82502200					93191500	ø 324 x 30 x 121	⊕ mit Umformachse
432400			Ate	2983506	[o] 29835 22		Ate		2983506	[o] 29835 22	
812 D (670.351, 670.352, 670.353)	09/96→	90 / 122		98012200					98026300		
				98022000					98026400		
			Ate	82502200			Ate		82502200		
				93087400	ø 304 x 30 x 91				93087500	ø 304 x 30 x 120.5	
									93191400	ø 304 x 30 x 121	P353505→
VARIO Bus 09/96→											
432500			Ate	2983506	[o] 29835 22		Ate		2983506	[o] 29835 22	
O 810 (670.373, 670.374)	09/96→	75 / 102		98012200					98012200		→axle P301750
O 812 (670.373, 670.674)	09/96→	90 / 122	Ate	82502200					98026300		axle P301751→
				93087400	ø 304 x 30 x 91		Ate		82502200		
									93087500	ø 304 x 30 x 120.5	
									93191400	ø 304 x 30 x 121	P353505→
432600			Ate	2983506	[o] 29835 22		Ate		2983506	[o] 29835 22	
O 813 (670.373, 670.374)	01/06→	95 / 129									
O 816 D (670.373, 670.374)	01/06→	115 / 156		98012200					98012200		→axle P301750
O 818 D (670.373, 670.374)	09/06→	130 / 177									

I - M

		kW / hp									
VARIO Bus 09/96→											
		432600		93087600	ø 324 x 30 x 91			98026300		axle P301751→
O 813 (670.373, 670.374)	01/06→	95 / 129								
O 816 D (670.373, 670.374)	01/06→	115 / 156						93087500	ø 304 x 30 x 120.5	axle 742.501
O 818 D (670.373, 670.374)	09/06→	130 / 177						93087700	ø 324 x 30 x 120.5	axle 742.501
								93191400	ø 304 x 30 x 121	P353505→ axle 742.505
								93191500	ø 324 x 30 x 121	P352857→ axle 742.505
		432700	Ate	2983506	[o] 29835 22		Ate	2983506	[o] 29835 22	
O 814 (670.373, 670.374)	09/96→	100 / 136		98012200				98012200		→axle P301750
O 815 (670.373, 670.374)	09/96→	112 / 152	Ate	82502200				98026300		axle P301751→
				93087600	ø 324 x 30 x 91		Ate	82502200		
								93087700	ø 324 x 30 x 120.5	
								93191400	ø 304 x 30 x 121	P353505→
VARIO Cab with engine 09/96→										
		432800	Ate	2983506	[o] 29835 22					
810 DT (670.398)	09/96→	75 / 102								
814 DT (670.398)	09/96→	100 / 136		98012200		2x				
816 DT (670.398)	09/96→	112 / 152		93087800	ø 324 x 30 x 111					
		432900	Ate	2983506	[o] 29835 22					
812 DT	09/96→	90 / 122		98012200						
				93087800	ø 324 x 30 x 111					
VARIO Dumptruck 09/96→										
		433000	Ate	2983506	[o] 29835 22		Ate	2983506	[o] 29835 22	
612 D (668.331, 668.332)	09/96→	90 / 122		98012200				98026300		
				98022000				98026400		
			Ate	82502200			Ate	82502200		
				93087400	ø 304 x 30 x 91			93087500	ø 304 x 30 x 120.5	⊕ ohne Umformachse
								93191400	ø 304 x 30 x 121	P353505→
								93191500	ø 324 x 30 x 121	⊕ mit Umformachse
		433100	Ate	2983506	[o] 29835 22		Ate	2983506	[o] 29835 22	
613 D, 614 D (668.331, 668.332)	09/96→	95 / 129		98012200				98026300		
613 D, 614 D (668.331, 668.332)	09/96→	100 / 136		98022000				98026400		
615 D, 616 D (668.331, 668.332)	09/98→	112 / 152	Ate	82502200			Ate	82502200		
615 D, 616 D (668.331, 668.332)	09/98→	115 / 156		93087600	ø 324 x 30 x 91			93087500	ø 304 x 30 x 120.5	⊕ ohne Umformachse
813 D, 814 D (670.331, 670.332)	09/96→	95 / 129						93087700	ø 324 x 30 x 120.5	
813 D, 814 D (670.331, 670.332)	09/96→	100 / 136						93191400	ø 304 x 30 x 121	P353505→
813 DA, 814 DA 4x4 (670.431, 670.432)	09/96→	95 / 129						93191500	ø 324 x 30 x 121	⊕ mit Umformachse
813 DA, 814 DA 4x4 (670.431, 670.432)	09/96→	100 / 136								
815 D, 816 D (670.331, 670.332)	09/96→	112 / 152								
815 D, 816 D (670.331, 670.332)	09/96→	115 / 156								
815 DA, 816 DA 4x4 (670.431, 670.432)	09/96→	112 / 152								
815 DA, 816 DA 4x4 (670.431, 670.432)	09/96→	115 / 156								
		433200	Ate	2983506	[o] 29835 22		Ate	2983506	[o] 29835 22	
618 D	09/06→	130 / 177		98012200			Ate	82502200		
818 D (670.321, 670.322)	09/06→	130 / 177		98022000				93087500	ø 304 x 30 x 120.5	⊕ ohne Umformachse
818 DA 4x4	09/06→	130 / 177	Ate	82502200				93191400	ø 304 x 30 x 121	P353505→

		kW / hp										
VARIO Dumptruck 09/96→												
618 D	09/06→	433200 130 / 177							93191500	ø 324 x 30 x 121	⊕ mit Umformachse
818 D (670.321, 670.322)	09/06→	130 / 177									
818 DA 4x4	09/06→	130 / 177									
812 D (670.331, 670.332)	09/96→	433300 90 / 122	Ate		2983506	[o] 29835 22		Ate	2983506	[o] 29835 22	
					98012200				98026300		
					98022000				98026400		
			Ate		82502200			Ate	82502200		
					93087400	ø 304 x 30 x 91			93087500	ø 304 x 30 x 120.5	
									93191400	ø 304 x 30 x 121	P353505→
VARIO Kasten/Kombi 09/96→ → VARIO Box Body / Estate, Page 696											
VARIO Kipper 09/96→ → VARIO Dumptruck, Page 698											
VARIO Platform/Chassis 09/96→											
512 D (667.321, 667.322, 667.323)	09/96→	433400 90 / 122	Per		2915301	[o] 29153 20		Per	2915301	[o] 29153 20	2x
					98031700	L189			98031700	L189	
					82075000				82075000		2x
				PRO	92131503	ø 276 x 22 x 77		PRO	92089803	ø 285 x 22 x 93	
612 D (668.321, 668.322, 668.323)	09/96→	433500 90 / 122	Ate		2983506	[o] 29835 22		Ate	2983506	[o] 29835 22	
					98012200				98026300		
					98022000				98026400		
			Ate		82502200			Ate	82502200		
					93087400	ø 304 x 30 x 91			93087500	ø 304 x 30 x 120.5	⊕ ohne Umformachse
									93191500	ø 324 x 30 x 121	⊕ mit Umformachse
613 D, 614 D (668.321, 668.322, 668.323)	09/96→	433600 95 / 129	Ate		2983506	[o] 29835 22		Ate	2983506	[o] 29835 22	
613 D, 614 D (668.321, 668.322, 668.323)	09/96→	100 / 136			98012200				98026300		
615 D, 616 D (668.321, 668.322, 668.323)	09/98→	112 / 152			98022000				98026400		
615 D, 616 D (668.321, 668.322, 668.323)	09/98→	115 / 156	Ate		82502200			Ate	82502200		
					93087600	ø 324 x 30 x 91			93087500	ø 304 x 30 x 120.5	⊕ ohne Umformachse
									93087700	ø 324 x 30 x 120.5	
									93191500	ø 324 x 30 x 121	⊕ mit Umformachse
618 D (668.321, 668.322, 668.323)	09/06→	433700 130 / 177	Ate		2983506	[o] 29835 22		Ate	2983506	[o] 29835 22	
818 D (670.321, 670.322, 670.323, 670.324)	09/06→	130 / 177			98012200			Ate	82502200		
818 DA 4x4	09/06→	130 / 177			98022000				93087500	ø 304 x 30 x 120.5	⊕ ohne Umformachse
			Ate		82502200				93191400	ø 304 x 30 x 121	P353505→
									93191500	ø 324 x 30 x 121	⊕ mit Umformachse
812 D (670.321, 670.322, 670.323, 670.324)	09/96→	433800 90 / 122	Ate		2983506	[o] 29835 22		Ate	2983506	[o] 29835 22	
					98012200				98026300		
					98022000				98026400		
			Ate		82502200			Ate	82502200		
					93087400	ø 304 x 30 x 91			93087500	ø 304 x 30 x 120.5	
									93191400	ø 304 x 30 x 121	P353505→
813 D, 814 D (670.321, 670.322, 670.323, 670.324)	09/96→	433900 95 / 129	Ate		2983506	[o] 29835 22		Ate	2983506	[o] 29835 22	
					98012200				98026300		

		kW / hp											
VARIO Platform/Chassis 09/96→													
813 D, 814 D (670.321, 670.322, 670.323, 670.324)	09/96→	100 / 136		98022000				98026400			
813 DA, 814 DA 4x4 (670.421, 670.422, 670.423)	09/96→	95 / 129	Ate	82502200			Ate	82502200			
813 DA, 814 DA 4x4 (670.421, 670.422, 670.423)	09/96→	100 / 136		93087600	ø 324 x 30 x 91			93087500	ø 304 x 30 x 120.5	⊕ ohne Umformachse
815 D, 816 D (670.321, 670.322, 670.323, 670.324)	09/96→	112 / 152						93087700	ø 324 x 30 x 120.5	
815 D, 816 D (670.321, 670.322, 670.323, 670.324)	09/96→	115 / 156						93191400	ø 304 x 30 x 121	P353505→
815 DA, 816 DA 4x4 (670.421, 670.422, 670.423)	09/96→	112 / 152						93191500	ø 324 x 30 x 121	⊕ mit Umformachse
815 DA, 816 DA 4x4 (670.421, 670.422, 670.423)	09/96→	115 / 156								
VARIO Pritsche/Fahrgestell 09/96→ → VARIO Platform/Chassis, Page 699													
VARIO Triebkopf 09/96→ → VARIO Cab with engine, Page 698													
V-CLASS (638/2) 09/96→07/03													
		434000	Bos	2302201	[o] 23022 20.9	Bosch	Bos	2302001	[o] 23020 17.9	Bosch
V 200 (638.214, 638.294)	02/97→07/03	95 / 129								
V 200 CDI (638.294)	03/99→07/03	75 / 102	Ate	2399002	[+] 23990 20.7	Teves	Ate	2190403	[+] 21904 16.9	Teves
V 220 CDI (638.294)	03/99→07/03	90 / 122								
V 230 (638.234, 638.294)	10/96→07/03	105 / 143		98018200	L210	Bosch		98036600	L152	Bosch
V 230 TD (638.274)	09/96→07/03	72 / 98		98031700	L189	Teves	Ate	82039700		Teves
V 280 (638.244, 638.294)	08/97→07/03	128 / 174	Bos	82061400		Bosch	Bos	82055600		Bosch
			Ate	82058400		Teves		92074503	ø 280 x 10 x 65.2	
			Ate	82062900		Teves		91054600	ø 178 x 20	
				92129203	ø 276 x 18 x 60	Bosch		97011600		
				92074403	ø 276 x 22 x 60	Teves				
V-CLASS (W447) 03/14→										
		434100		98033700	L103			98033700	L103	
V 200 CDI (447.815, 447.811, 447.813)	03/14→	100 / 136								
V 220 CDI (447.815, 447.811, 447.813)	03/14→	120 / 163		TPM0002				TPM0002		
V 250 BlueTEC (447.815, 447.811, 447.813)	03/14→	140 / 190								
VIANO (W639) 09/03→										
		434200	Bos	2400701	[+] 24007 20.2	→342257	Bos	2400801	[+] 24008 17.7	
3,0	09/03→	140 / 190								
3.2	09/03→	160 / 218	Bre	2919202	[+] 29192 20.9	342258→		98033800	L95	
3.5	09/07→	190 / 258								
3.7	06/04→	170 / 231		98033700	L103	342258→	Bos	82054200		
3.7	06/04→07/07	165 / 224								
CDI 2.0	09/03→	80 / 109		98033800	L95	→342257		93123503	ø 296 x 10 x 57.6	
CDI 2.0	08/05→	85 / 116								
CDI 2.2	09/03→	110 / 150	Bos	82054200		→342257		TPM0002		
CDI 3.0	03/06→	150 / 204								
			Bre	82071000		342258→		91061900	ø 186 x 20	
				93123400	ø 300 x 28 x 58.6			97011600		
				TPM0002						
		434300	Bre	2919202	[+] 29192 20.9		Bos	2400801	[+] 24008 17.7	
CDI 2.0	07/10→	100 / 136								
CDI 2.0 4-matic	03/06→	85 / 116		98033700	L103			98033800	L95	
CDI 2.0 4-matic	07/10→	100 / 136								
CDI 2.2	07/10→	120 / 163	Bre	82071000			Bos	82054200		
CDI 2.2 4-matic	07/10→	120 / 163								
CDI 3.0	07/10→	165 / 224		93123400	ø 300 x 28 x 58.6			93123503	ø 296 x 10 x 57.6	
				TPM0002				TPM0002		
								91061900	ø 186 x 20	
								97011600		
		434400	Bos	2400701	[+] 24007 20.2	→407625	Bos	2400801	[+] 24008 17.7	
CDI 2.0 4-matic	07/05→	80 / 109								
CDI 2.2 4-matic	07/05→	110 / 150								

		kW / hp											
VIANO (W639) 09/03→													
		434400	Bre		2919202	[+] 29192 20.9	407626→			98033800	L95	
CDI 2.0 4-matic	07/05→	80 / 109			98033700	L103	407626→		Bos	82054200		
CDI 2.2 4-matic	07/05→	110 / 150			98033800	L95	→407625			93123503	ø 296 x 10 x 57.6	
			Bos		82054200		→342257			TPM0002		
			Bre		82071000		407626→			91061900	ø 186 x 20	
					93123400	ø 300 x 28 x 58.6				97011600		
					TPM0002							
VITO / MIXTO Box (W639) 09/03→													
		434500	Bos		2400701	[+] 24007 20.2	→342257		Bos	2400801	[+] 24008 17.7	
109 CDi	08/06→	70 / 95										
109 CDI	09/03→	65 / 88	Bre		2919202	[+] 29192 20.9	342258→			98033800	L95	
111 CDI	09/03→	80 / 109										
111 CDI	09/07→	85 / 116			98033700	L103	342258→		Bos	82054200		
115 CDI	09/03→	110 / 150										
119	09/03→	140 / 190			98033800	L95	→342257			93123503	ø 296 x 10 x 57.6	
120 CDI	07/06→	150 / 204										
122	09/03→	160 / 218	Bos		82054200		→342257			TPM0002		
123	06/04→07/08	165 / 224										
123 (639.603)	06/04→07/08	170 / 231	Bre		82071000		342258→			91061900	ø 186 x 20	
126	09/07→	190 / 258										
					93123400	ø 300 x 28 x 58.6				97011600		
					TPM0002							
		434600	Bre		2919202	[+] 29192 20.9			Bos	2400801	[+] 24008 17.7	
110 CDI	09/10→	70 / 95										
113 CDI	09/10→	100 / 136			98033700	L103				98033800	L95	
116 CDI	09/10→	120 / 163										
122 CDI	09/10→	165 / 224	Bre		82071000				Bos	82054200		
					93123400	ø 300 x 28 x 58.6				93123503	ø 296 x 10 x 57.6	
					TPM0002					TPM0002		
										91061900	ø 186 x 20	
										97011600		
		434700	Bos		2400701	[+] 24007 20.2	→407625		Bos	2400801	[+] 24008 17.7	
111 CDI 4x4	09/07→	80 / 109										
			Bre		2919202	[+] 29192 20.9	407626→			98033800	L95	
					98033700	L103	407625→		Bos	82054200		
					98033800	L95	→407625			93123503	ø 296 x 10 x 57.6	
			Bos		82054200		→407625			TPM0002		
			Bre		82071000		407626→			91061900	ø 186 x 20	
					93123400	ø 300 x 28 x 58.6				97011600		
					TPM0002							
		434800	Bos		2400701	[+] 24007 20.2			Bos	2400801	[+] 24008 17.7	
113 CDI 4x4	09/10→	100 / 136										
116 CDI 4x4	09/10→	120 / 163	Bre		2919202	[+] 29192 20.9				98033800	L95	
					98033700	L103	Brembo			93123503	ø 296 x 10 x 57.6	
					98033800	L95	Bosch			TPM0002		
					93123400	ø 300 x 28 x 58.6				91061900	ø 186 x 20	
					TPM0002							
		434900	Bos		2400701	[+] 24007 20.2	→407625		Bos	2400801	[+] 24008 17.7	
115 CDI 4x4	07/06→	110 / 150										
			Bre		2919202	[+] 29192 20.9	407626→			98033800	L95	
					98033700	L103	407626→		Bos	82054200		

kW / hp

VITO / MIXTO Box (W639) 09/03→

434900													
115 CDI 4x4	07/06→	110 / 150		98033800	L95	→407625		PRO	93123503	ø 296 x 10 x 57.6	
			Bos	82054200		→396065			TPM0002		
			Bre	82071000		407626→			91061900	ø 186 x 20	
				93123400	ø 300 x 28 x 58.6				97011600		
				TPM0002							

VITO / MIXTO Kasten (W639) 09/03→ → VITO / MIXTO Box (W639), Page 701

VITO Box (638) 03/97→07/03

435000			Bos	2302201	[o] 23022 20.9	Bosch	Bos	2302001	[o] 23020 17.9	Bosch
108 CDI 2.2 (638.094)	03/99→07/03	60 / 82								
108 D 2.3 (638.064)	03/97→07/03	58 / 79	Ate	2399002	[+] 23990 20.7	Teves	Ate	2190403	[+] 21904 16.9	Teves
110 CDI 2.2 (638.094)	03/99→07/03	75 / 102								
110 D 2.3 (638.074)	03/97→07/03	72 / 98		98018200	L210	Bosch		98036600	L152	Bosch
112 CDI 2.2 (638.094)	03/99→07/03	90 / 122								
113 2.0 (638.014, 638.094)	03/97→07/03	95 / 129		98031700	L189	Teves	Ate	82039700		Teves
114 2.3 (638.034, 638.094)	03/97→07/03	105 / 143								
			Bos	82061400		Bosch	Bos	82055600		Bosch
			Ate	82058400		Teves		PRO	92074503	ø 280 x 10 x 65.2	
			Ate	82062900		Teves			91054600	ø 178 x 20	
				PRO 92129203	ø 276 x 18 x 60	Bosch			97011600		
				PRO 92074403	ø 276 x 22 x 60	Teves					

VITO Bus (638) 02/96→07/03

435100			Bos	2302201	[o] 23022 20.9	Bosch	Bos	2302001	[o] 23020 17.9	Bosch
108 CDI 2.2 (638.194)	03/99→07/03	60 / 82								
108 D 2.3 (638.164)	02/96→07/03	58 / 79	Ate	2399002	[+] 23990 20.7	Teves	Ate	2190403	[+] 21904 16.9	Teves
110 CDI 2.2 (638.194)	03/99→07/03	75 / 102								
110 TD 2.3 (638.174)	02/96→07/03	72 / 98		98018200	L210	Bosch		98036600	L152	Bosch
112 CDI 2.2 (638.194)	03/99→07/03	90 / 122								
113 2.0 (638.114, 638.194)	02/96→07/03	95 / 129		98031700	L189	Teves	Ate	82039700		Teves
114 2.3 (638.134, 638.194)	12/96→07/03	105 / 143								
			Bos	82061400		Bosch	Bos	82055600		Bosch
			Ate	82058400		Teves		PRO	92074503	ø 280 x 10 x 65.2	
			Ate	82062900		Teves			91054600	ø 178 x 20	
				PRO 92129203	ø 276 x 18 x 60	Bosch			97011600		
				PRO 92074403	ø 276 x 22 x 60	Teves					

VITO Bus (W639) 09/03→

435200			Bos	2400701	[+] 24007 20.2	→342257	Bos	2400801	[+] 24008 17.7	
109 CDI	09/03→	65 / 88								
109 CDI	09/06→	70 / 95	Bre	2919202	[+] 29192 20.9	342258→		98033800	L95	
111 CDI	09/03→	80 / 109								
111 CDI (639.701)	09/07→	85 / 116		98033700	L103	342258→	Bos	82054200		
115 CDI	09/03→	110 / 150								
119	09/03→	140 / 190		98033800	L95	→342257		PRO	93123503	ø 296 x 10 x 57.6	
120 CDI	07/06→	150 / 204								
122	09/03→	160 / 218	Bos	82054200		→342257			TPM0002		
123	06/04→	170 / 231								
123	06/04→07/08	165 / 224	Bre	82071000		342258→			91061900	ø 186 x 20	
126	09/07→	190 / 258								
				93123400	ø 300 x 28 x 58.6				97011600		
				TPM0002							
435300			Bos	2400701	[+] 24007 20.2	→407625	Bos	2400801	[+] 24008 17.7	
109 CDI 4x4	09/07→	70 / 95								
			Bre	2919202	[+] 29192 20.9	407626→		98033800	L95	
				98033700	L103	407626→	Bos	82054200		
				98033800	L95	→407625		PRO	93123503	ø 296 x 10 x 57.6	
			Bos	82054200		→342257			TPM0002		
			Bre	82071000		407626→			91061900	ø 186 x 20	

		kW / hp											
VITO Bus (W639) 09/03→													
		435300		93123400	ø 300 x 28 x 58.6				97011600				
109 CDI 4x4	09/07→	70 / 95		TPM0002									
		435400	Bre	2919202	[+] 29192 20.9		Bos		2400801	[+] 24008 17.7			
110 CDI	09/10→	70 / 95		98033700	L103				98033800	L95			
113 CDI	09/10→	100 / 136	Bre	82071000			Bos		82054200				
113 CDI 4x4	09/10→	100 / 136		93123400	ø 300 x 28 x 58.6			PRO	93123503	ø 296 x 10 x 57.6			
116 CDI	09/10→	120 / 163		TPM0002					TPM0002				
116 CDI 4x4	09/10→	120 / 163							91061900	ø 186 x 20			
122 CDI	09/10→	165 / 224							97011600				
		435500	Bos	2400701	[+] 24007 20.2	→407625	Bos		2400801	[+] 24008 17.7			
111 CDI 4x4	09/07→	80 / 109	Bre	2919202	[+] 29192 20.9	407626→			98033800	L95			
115 CDI 4x4	09/07→	110 / 150		98033700	L103	407626→	Bos		82054200				
				98033800	L95	→407625		PRO	93123503	ø 296 x 10 x 57.6			
			Bos	82054200		→407625			TPM0002				
			Bre	82071000		407626→			91061900	ø 186 x 20			
				93123400	ø 300 x 28 x 58.6				97011600				
				TPM0002									

VITO Kasten (638) 03/97→07/03 → VITO Box (638), Page 702

V-KLASSE (638/2) 09/96→07/03 → V-CLASS (638/2), Page 700

V-KLASSE (W447) 03/14→ → V-CLASS (W447), Page 700

		kW / hp											
MARINER 05/04→12/07													
		435600	Ate	2443901	[–] 24439 15		Ate		2467001	[–] 24670 17.1	⊕ rear disc brake		
2.3 4WD	09/05→12/06	114 / 155											
3.0 All-wheel Drive	05/04→12/07	151 / 205											
		435700					Ate		2467001	[–] 24670 17.1	⊕ rear disc brake		
3.0	09/05→12/06	149 / 203											
MARINER 09/06→12/10													
		435800					Ate		2467001	[–] 24670 17.1	⊕ rear disc brake		
2.3 Hybrid	09/06→12/08	114 / 154											
2.5	09/08→12/10	128 / 174											
2.5 Hybrid	09/08→12/10	132 / 180											
		435900					Ate		2467001	[–] 24670 17.1	⊕ rear disc brake →2012-04-29		
2.5	09/10→	130 / 177											
2.5 4WD	09/10→	130 / 177											
3.0 FLEX 4WD	09/10→	179 / 243											
3.0 Flex AWD	01/10→	179 / 243											
MARINER Closed Off-Road Vehicle 09/05→12/09													
		436000	Ate	2443901	[–] 24439 15		Ate		2467001	[–] 24670 17.1	⊕ rear disc brake		
3.0 4WD	09/05→12/07	180 / 244											
		436100					Ate		2467001	[–] 24670 17.1	⊕ rear disc brake		
3.0 AWD	09/08→12/09	180 / 244											
MARINER Closed Off-Road Vehicle 09/10→													
		436200					Ate		2467001	[–] 24670 17.1	⊕ rear disc brake →2012-04-29		
3.0	09/10→	179 / 243											

MARINER Geländewagen geschlossen 09/05→12/09 → MARINER Closed Off-Road Vehicle, Page 703

MARINER Geländewagen geschlossen 09/10→ → MARINER Closed Off-Road Vehicle, Page 703

MONTEGO 06/03→													
		436300		2458002	[–] 24580 17								
3.0 SE	06/03→	151 / 205											
3.0 SE	09/04→12/05	169 / 230											
3.0 SE All-wheel Drive	06/03→	151 / 205											
3.0 SE All-wheel Drive	09/04→12/05	169 / 230											
MONTEREY Mini Passenger Van 09/03→12/07													
		436400					Luc		2479901	[–] 24799 16.9	→2007-01-02		
4.2	09/03→12/07	150 / 204											

MERCURY

MERCURY

		kW / hp												
MOUNTAINEER 10/00→12/05														
		438500								Kel		**2438101**	[–] 24381 14.6	→2005-07-19
4.0	10/00→12/05	152 / 207												
4.0 All-wheel Drive	10/00→12/05	152 / 207												
4.6	10/00→12/05	178 / 242												
4.6 All-wheel Drive	10/00→12/05	178 / 242												
MYSTIQUE 09/97→08/01														
		436600	Ate		**2135803**	[–] 21358 19.8	→12/97			Bos		**2341007**	[–] 23410 15.7	
2.0	09/97→08/01	96 / 131	Ate		**2139408**	[–] 21394 18.5	12/97→			Bos		**2341008**	[+] 23410 15.7	
			Ate		**2191003**	[+] 21910 19.8	→12/97			Bos		**82031600**		
			Ate		**2307104**	[+] 23071 18.5	12/97→				PRO	**92063603**	ø 253 x 20 x 43.7	
			Ate		**82032100**									
			Ate		**82062900**									
					92075400	ø 278 x 24 x 47								
SABLE 09/95→02/00														
		436700	Luc		**2363701**	[–] 23637 17								
3.0	09/95→02/00	108 / 147												
3.0	09/95→02/00	130 / 177												
SABLE 09/04→12/05														
		436800			**2458002**	[–] 24580 17								
3.0	09/04→12/05	114 / 155												
SABLE Estate 09/95→02/00														
		436900	Luc		**2363701**	[–] 23637 17								
3.0	09/95→02/00	130 / 177												
SABLE Kombi 09/95→02/00 → SABLE Estate, Page 704														

METROCAB

METROCAB

		kW / hp												
TAXI 01/91→05/06														
		437000	Lkh		**2145901**	[–] 21459 18.5								
2.4 TD	01/01→05/06	66 / 90												
2.5 D	01/91→05/06	52 / 71												

MG

MG

		kW / hp												
EXPRESS Box 03/03→05/05														
		437100	Luc		**2151503**	[+] 21515 18				Ake		**2131201**	[+] 21312 13	⊕ rear disc brake
1.4	03/03→05/05	76 / 103	Luc		**82061100**					Ake		**82028400**		⊕ rear disc brake
2.0 TD	03/03→05/05	83 / 113		PRO	**92060903**	ø 262 x 21 x 44.6				Ake		**82063000**		⊕ rear disc brake
												91043900	ø 203.2 x 38	⊕ rear drum brake
												92125300	ø 260 x 10 x 48.7	⊕ rear disc brake
												94017600	ø 203,0 x 45.5	⊕ rear drum brake
		437200	Luc		**2151503**	[+] 21515 18				Ake		**2131201**	[+] 21312 13	⊕ rear disc brake
1.8	03/03→05/05	86 / 117	Luc		**82061100**					Ake		**82028400**		⊕ rear disc brake
2.0 TD	03/03→05/05	74 / 101		PRO	**92060903**	ø 262 x 21 x 44.6				Ake		**82063000**		
												92125300	ø 260 x 10 x 48.7	
		437300	Luc		**2309401**	[+] 23094 17				Ake		**2171901**	[+] 21719 14.6	⊕ rear disc brake
160	03/03→05/05	118 / 160	Luc		**82061200**							**91043900**	ø 203.2 x 38	⊕ rear drum brake
				PRO	**92060903**	ø 262 x 21 x 44.6						**92125300**	ø 260 x 10 x 48.7	⊕ rear disc brake
				PRO	**92170703**	ø 282 x 25 x 44.5						**94017600**	ø 203,0 x 45.5	⊕ rear drum brake
EXPRESS Kasten 03/03→05/05 → EXPRESS Box, Page 704														

		kW / hp												
MG 6 Hatchback 11/10→														
		437400							Ate		2193402	[o] 21934 17.3	
1.8	11/10→	98 / 133												
1.8 T	11/10→	118 / 160							Ate	epad	2193481	[o] 21934 17.3	
1.9 DTi	08/12→	110 / 150												
MG 6 Saloon 11/10→														
		437500							Ate		2193402	[o] 21934 17.3	
1.8	11/10→	98 / 133												
1.8 T	11/10→	118 / 160							Ate	epad	2193481	[o] 21934 17.3	
1.9 DTi	08/12→	110 / 150												
MG 6 Schrägheck 11/10→ → MG 6 Hatchback, Page 705														
MG 6 Stufenheck 11/10→ → MG 6 Saloon, Page 705														
MGF (RD) 03/95→03/02														
		437600	Lkh		2367901	[–] 23679 16.1			Luc		2168202	[+] 21682 14.5	Lucas
1,8 i VVC	10/01→03/02	118 / 160		PRO	92170203	ø 304 x 24 x 38.5					92152500	ø 240 x 10 x 43	
		437700	Luc		2151801	[–] 21518 17			Luc		2168202	[+] 21682 14.5	⊕ rear disc brake
1.6	02/00→03/02	82 / 111											
1.8 i 16V	03/95→03/02	88 / 120											
1.8 i VVC	03/95→03/02	107 / 146			92044500	ø 240 x 22 x 43.2					92152500	ø 240 x 10 x 43	
MG TF 03/02→													
		437800	Luc		2151801	[–] 21518 17			Luc		2168202	[+] 21682 14.5	
115	03/02→	85 / 116											
120	03/02→	88 / 120			92044500	ø 240 x 22 x 43.2					82512500		
											92152500	ø 240 x 10 x 43	
		437900	Luc		2151801	[–] 21518 17	Ø 240 mm		Luc		2168202	[+] 21682 14.5	
135	03/02→	100 / 136	Lkh		2367901	[–] 23679 16.1	Ø 304 mm				82512500		
					92044500	ø 240 x 22 x 43.2	Lucas				92152500	ø 240 x 10 x 43	
				PRO	92170203	ø 304 x 24 x 38.5	Lockheed						
		438000	Lkh		2367901	[–] 23679 16.1			Luc		2168202	[+] 21682 14.5	
160	03/02→	118 / 160			92044500	ø 240 x 22 x 43.2					82512500		
				PRO	92170203	ø 304 x 24 x 38.5					92152500	ø 240 x 10 x 43	
MG ZR 06/01→04/05													
		438100	Luc		2151503	[+] 21515 18			Ake		2131201	[+] 21312 13	⊕ rear disc brake
105	06/01→04/05	76 / 103	Luc		82061100				Ake		82028400		⊕ rear disc brake
					92090100	ø 262 x 13 x 44.6			Ake		82063000		
				PRO	92060903	ø 262 x 21 x 44.6					91043900	ø 203.2 x 38	⊕ rear drum brake
									Lkh		97013500		⊕ rear drum brake
											92060800	ø 239 x 10 x 48.1	
											94017600	ø 203,0 x 45.5	⊕ rear drum brake
		438200	Luc		2151503	[+] 21515 18			Ake		2131201	[+] 21312 13	⊕ rear disc brake
120	06/01→04/05	86 / 117	Luc		82061100				Ake		82028400		⊕ rear disc brake
				PRO	92060903	ø 262 x 21 x 44.6			Ake		82063000		
											91043900	ø 203.2 x 38	⊕ rear drum brake
									Lkh		97013500		⊕ rear drum brake
											92060800	ø 239 x 10 x 48.1	
											94017600	ø 203,0 x 45.5	⊕ rear drum brake
		438300	Luc		2309401	[+] 23094 17			Ake		2171901	[+] 21719 14.6	
160	06/01→04/05	118 / 160	Luc		82061200						92125300	ø 260 x 10 x 48.7	
				PRO	92060903	ø 262 x 21 x 44.6							
				PRO	92170703	ø 282 x 25 x 44.5							

MG ZR 06/01→04/05

		kW / hp											
		438400	Luc		2151503	[+] 21515 18		Ake		2131201	[+] 21312 13	⊕ rear disc brake
2.0 TD	06/01→04/05	74 / 100										
2.0 TD	12/02→04/05	83 / 113	Luc		82061100			Ake		82028400		⊕ rear disc brake
				PRO	92060903	ø 262 x 21 x 44.6		Ake		82063000		
										91043900	ø 203.2 x 38	⊕ rear drum brake
								Lkh		97013500		⊕ rear drum brake
										92125300	ø 260 x 10 x 48.7	
										94017600	ø 203,0 x 45.5	⊕ rear drum brake

MG ZS 07/01→04/05

		438500	Luc		2151503	[+] 21515 18		Ake		2131201	[+] 21312 13	⊕ rear disc brake
1.6	07/03→04/05	79 / 107										
120	07/01→04/05	86 / 117	Luc		82058500		solid disc	Ake		82028400		⊕ rear disc brake
2.0 TD	01/04→04/05	74 / 101										
2.0 TD	01/04→04/05	83 / 113	Luc		82061100		vented disc	Ake		82063000		⊕ rear disc brake
					92090100	ø 262 x 13 x 44.6				91043900	ø 203.2 x 38	⊕ rear drum brake
				PRO	92060903	ø 262 x 21 x 44.6				92060800	ø 239 x 10 x 48.1	⊕ rear disc brake
										94017600	ø 203,0 x 45.5	⊕ rear drum brake
		438600	Luc		2309401	[+] 23094 17		Ake		2171901	[+] 21719 14.6	⊕ rear disc brake
180	07/01→04/05	130 / 177										
				PRO	92170703	ø 282 x 25 x 44.5		Ake		82028400		⊕ rear disc brake
								Ake		82063000		

MG ZS Hatchback 07/01→10/05

		438700	Luc		2151503	[+] 21515 18		Ake		2131201	[+] 21312 13	⊕ rear disc brake
1.6	11/01→10/05	82 / 111										
			Luc		82058500		solid disc	Ake		82028400		⊕ rear disc brake
			Luc		82061100		vented disc	Ake		82063000		
					92090100	ø 262 x 13 x 44.6				91043900	ø 203.2 x 38	⊕ rear drum brake
				PRO	92060903	ø 262 x 21 x 44.6				92060800	ø 239 x 10 x 48.1	⊕ rear disc brake
		438800	Luc		2151503	[+] 21515 18		Ake		2131201	[+] 21312 13	⊕ rear disc brake
120	07/01→10/05	86 / 117										
2.0 TD	01/04→10/05	74 / 101										
2.0 TD	01/04→10/05	83 / 113	Luc		82058500		solid disc	Ake		82028400		⊕ rear disc brake
			Luc		82061100		vented disc	Ake		82063000		⊕ rear disc brake
					92090100	ø 262 x 13 x 44.6				91043900	ø 203.2 x 38	⊕ rear drum brake
				PRO	92060903	ø 262 x 21 x 44.6				92060800	ø 239 x 10 x 48.1	⊕ rear disc brake
										94017600	ø 203,0 x 45.5	⊕ rear drum brake
		438900	Luc		2309401	[+] 23094 17		Ake		2171901	[+] 21719 14.6	
180	07/01→10/05	130 / 177										
				PRO	92170703	ø 282 x 25 x 44.5		Ake		82028400		⊕ rear disc brake
								Ake		82063000		

MG ZS Saloon 07/01→04/05 → MG ZS, Page 706

MG ZS Stufenheck 07/01→04/05 → MG ZS, Page 706

MG ZT 06/01→07/05

		439000	Ate		2311203	[o] 23112 19.1		Ate		2193402	[o] 21934 17.3	
1.8 16V	01/03→07/05	88 / 120										
1.8 T 16V	01/03→07/05	118 / 160			98026500	L1120		Ate		2193481	[o] 21934 17.3	
160	06/01→07/05	118 / 160							epad			
180	01/03→07/05	130 / 177								98026600	L850	
190	06/01→07/05	140 / 190	Ate		82032000							
2.0 CDTi	06/02→09/03	85 / 116										
2.0 CDTi	11/02→07/05	96 / 131	Ate		82062900			Ate		82028700		
								Ate		82062900		
					92103400	ø 284 x 22 x 38.2						
				PRO	92170303	ø 325 x 25 x 35				92103500	ø 280 x 10 x 61.8	

→

MG ZT 06/01→07/05

		kW / hp									
		439000									
1.8 16V	01/03→07/05	88 / 120								91060300	ø 160 x 20
1.8 T 16V	01/03→07/05	118 / 160									
160	06/01→07/05	118 / 160								97036100	
180	01/03→07/05	130 / 177									
190	06/01→07/05	140 / 190									
2.0 CDTi	06/02→09/03	85 / 116									
2.0 CDTi	11/02→07/05	96 / 131									
		439100	Ate		2318302	[o] 23183 20.3		Ate		82028700	
260	10/03→07/05	191 / 260	Ate	epad	2318381	[o] 23183 20.3		Ate		82062900	
			Ate		82028600						
			Ate		82062900						
				PRO	92170303	ø 325 x 25 x 35					

MG ZT Saloon 06/01→07/05 → MG ZT, Page 706

MG ZT Stufenheck 06/01→07/05 → MG ZT, Page 706

MG ZT- T 10/01→07/05

		439200	Ate		2311203	[o] 23112 19.1		Ate		2193402	[o] 21934 17.3
1.8 16V	01/03→07/05	88 / 120			98026500	L1120		Ate	epad	2193481	[o] 21934 17.3
1.8 T 16V	01/03→07/05	118 / 160									
160	10/01→07/05	118 / 160								98026600	L850
180	01/03→07/05	130 / 177	Ate		82032000			Ate		82028700	
190	10/01→07/05	140 / 190	Ate		82062900			Ate		82062900	
2.0 CDTi	06/02→09/03	85 / 116			92103400	ø 284 x 22 x 38.2					
2.0 CDTi	11/02→07/05	96 / 131		PRO	92170303	ø 325 x 25 x 35				92103500	ø 280 x 10 x 61.8
										91060300	ø 160 x 20
										97036100	
		439300	Ate		2318302	[o] 23183 20.3		Ate		82028700	
260	10/03→07/05	191 / 260	Ate	epad	2318381	[o] 23183 20.3		Ate		82062900	
			Ate		82028600						
			Ate		82062900						
				PRO	92170303	ø 325 x 25 x 35					

MINI MINI

MINI (F55) 10/14→

		kW / hp									
		439400	Luc		2391601	[o] 23916 17.8				TPM0003	
Cooper	10/14→	100 / 136			TPM0003						
Cooper D	10/14→	85 / 116									
		439500			TPM0003					TPM0003	
Cooper S	10/14→	141 / 192									
Cooper SD	10/14→	125 / 170									

MINI (F56) 12/13→

		439600	Luc		2391601	[o] 23916 17.8				TPM0003	
Cooper	12/13→	100 / 136			TPM0003						
Cooper D	12/13→	85 / 116									
Cooper S	12/13→	141 / 192									
One	06/14→	55 / 75									
		439700			TPM0003					TPM0003	
Cooper SD	06/14→	125 / 170									
One	03/14→	75 / 102									
One D	03/14→	70 / 95									

MINI (R50, R53) 06/01→09/06

		439800	Ate		2328101	[o] 23281 18.3		Ate		2404301	[o] 24043 16.3
1.4	04/03→09/06	55 / 75									
Cooper	06/01→09/06	85 / 116	Ate	epad	2328181	[o] 23281 18.3		Ate	epad	2404381	[o] 24043 16.3
Cooper S	03/02→09/06	120 / 163									
One	06/01→09/06	66 / 90			98030200	L885				98030300	L1095
One D	06/03→09/06	55 / 75									
One D	06/03→09/06	65 / 88	Ate		82032000			Ate		82062900	
			Ate		82062900			Ate		82503500	

		kW / hp											
MINI (R50, R53) 06/01→09/06													
		439800			**92107500**	ø 276 x 22 x 44				**92107603**	ø 259 x 10 x 44	→07/06
1.4	04/03→09/06	55 / 75		PRO	**92107503**	ø 276 x 22 x 44			PRO	**92175003**	ø 259 x 10 x 44	07/06→
Cooper	06/01→09/06	85 / 116			**TPM0010**					**TPM0010**		
Cooper S	03/02→09/06	120 / 163										
One	06/01→09/06	66 / 90										
One D	06/03→09/06	55 / 75										
One D	06/03→09/06	65 / 88										
		439900	Ate		**2328101**	[o] 23281 18.3	⊖ JCW Kit		Ate	**2404301**	[o] 24043 16.3	
Cooper S	07/04→09/06	125 / 170	Ate	epad	**2328181**	[o] 23281 18.3	⊖ JCW Kit		Ate	epad **2404381**	[o] 24043 16.3	
			Luc		**2398401**	[o] 23984 18	⊕ JCW Kit			**98030300**	L1095	
					98030200	L885			Ate	**82062900**		
			Ate		**82032000**				Ate	**82503500**		
			Ate		**82062900**				PRO	**92107603**	ø 259 x 10 x 44	→07/06
					92107500	ø 276 x 22 x 44	⊖ JCW Kit		PRO	**92175003**	ø 259 x 10 x 44	
				PRO	**92107503**	ø 276 x 22 x 44	⊖ JCW Kit			**TPM0010**		
				PRO	**92183603**	ø 294 x 22 x 44	⊕ JCW Kit					
					TPM0010							
		440000	Luc		**2398401**	[o] 23984 18			Ate	**2404301**	[o] 24043 16.3	
John Cooper Works	03/06→09/06	160 / 218		PRO	**92183503**	ø 294 x 22 x 44	07/06→		Ate	epad **2404381**	[o] 24043 16.3	
Works	11/03→09/06	155 / 210		PRO	**92183603**	ø 294 x 22 x 44	→07/06		PRO	**92107603**	ø 259 x 10 x 44	→07/06
									PRO	**92175003**	ø 259 x 10 x 44	07/06→
		440100	Luc		**2398401**	[o] 23984 18			Ate	**2404301**	[o] 24043 16.3	
S Works	11/03→06/05	147 / 200		PRO	**92183603**	ø 294 x 22 x 44			Ate	epad **2404381**	[o] 24043 16.3	
									PRO	**92107603**	ø 259 x 10 x 44	
MINI (R56) 10/06→07/10													
		440200	Luc		**2391601**	[o] 23916 17.8			Luc	**2428901**	[o] 24289 17	
Cooper	10/06→	88 / 120			**98036200**	L807	→08/10			**98036300**	L1127	→08/10
Cooper D	03/07→	80 / 109			**98044800**	L815	08/10→			**98044900**	L1140	08/10→
One	03/07→	70 / 95		PRO	**92157903**	ø 280 x 22 x 44.1			Luc	**82060100**		
One	03/09→	55 / 75			**TPM0010**				PRO	**92175003**	ø 259 x 10 x 44	
										TPM0010		
		440300	Luc		**2391601**	[o] 23916 17.8	⊖ sport pack.		Luc	**2428901**	[o] 24289 17	
Cooper	03/10→	85 / 115			**98036200**	L807	→08/10			**98036300**	L1127	→08/10
Cooper	03/10→	90 / 122			**98044800**	L815	08/10→			**98044900**	L1140	08/10→
One	03/10→	55 / 75	Bre		**82517600**				Luc	**82060100**		
One	03/10→	72 / 98		PRO	**92157903**	ø 280 x 22 x 44.1	⊖ sport pack.		PRO	**92175003**	ø 259 x 10 x 44	
One D	07/10→	66 / 90			**TPM0010**					**TPM0010**		
		440400	Luc		**2391601**	[o] 23916 17.8	⊖ sport pack.		Luc	**2428901**	[o] 24289 17	
Cooper D	06/10→	82 / 112			**98036200**	L807	→08/10			**98036300**	L1127	→08/10
					98044800	L815	08/10→			**98044900**	L1140	08/10→
			Bre		**82517600**				Luc	**82060100**		
				PRO	**92157903**	ø 280 x 22 x 44.1	⊖ sports susp.		PRO	**92175003**	ø 259 x 10 x 44	
					TPM0010					**TPM0010**		
		440500	Luc		**2391601**	[o] 23916 17.8	⊖ sport pack.		Luc	**2428901**	[o] 24289 17	
Cooper D	02/11→	82 / 112										
Cooper SD	02/11→	105 / 143										

		kW / hp											
MINI (R56) 10/06→07/10													
		440500			98044800	L815				98044900	L1140	
Cooper D	02/11→	82 / 112	Bre		82517600			Luc		82060100		
Cooper SD	02/11→	105 / 143		PRO	92157903	ø 280 x 22 x 44.1			PRO	92175003	ø 259 x 10 x 44	
					TPM0010					TPM0010		
		440600	Luc		2398401	[o] 23984 18		Luc		2428901	[o] 24289 17	
Cooper S	10/06→	128 / 174			98036200	L807	→08/10			98036300	L1127	→08/10
Cooper S	03/10→	135 / 184			98044800	L815	08/10→			98044900	L1140	08/10→
				PRO	92183503	ø 294 x 22 x 44		Luc		82060100		
					TPM0010				PRO	92175003	ø 259 x 10 x 44	
										TPM0010		
		440700	Luc		2398401	[o] 23984 18	⊕ USA →08/10	Luc		2428901	[o] 24289 17	
Cooper S	03/10→	120 / 163			98036200	L807	→08/10			98036300	L1127	→08/10
					98044800	L815	08/10→			98044900	L1140	08/10→
				PRO	92183503	ø 294 x 22 x 44		Luc		82060100		
					TPM0010				PRO	92175003	ø 259 x 10 x 44	
										TPM0010		
		440800	Luc		2398401	[o] 23984 18		Luc		2428901	[o] 24289 17	
Cooper S	01/12→	147 / 200			98044800	L815				98044900	L1140	
				PRO	92183503	ø 294 x 22 x 44		Luc		82060100		
					TPM0010				PRO	92175003	ø 259 x 10 x 44	
										TPM0010		
		440900	Luc		2391601	[o] 23916 17.8	Ø 280 mm	Luc		2428901	[o] 24289 17	
Cooper SD	02/11→	100 / 136	Luc		2398404	[o] 23984 18	Ø 294 mm			98044900	L1140	
					98044800	L815			PRO	92175003	ø 259 x 10 x 44	
				PRO	92157903	ø 280 x 22 x 44.1						
				PRO	92196703	ø 294 x 22 x 44						
		441000	Bre		2447801	[o] 24478 14.8		Luc		2428901	[o] 24289 17	
John Cooper Works	07/07→	141 / 192			98044800	L815				98036300	L1127	⊕ sports susp.
			Bre		82517600		⊕ sports susp.			98044900	L1140	⊖ sports susp.
				PRO	92255003	ø 316 x 22 x 45.2	⊖ sports susp.			TPM0010		
					TPM0010							
		441100	Luc		2398401	[o] 23984 18		Ate		2404301	[o] 24043 16.3	
John Cooper Works	03/08→	155 / 211		PRO	92183503	ø 294 x 22 x 44		Ate	epad	2404381	[o] 24043 16.3	
									PRO	92175003	ø 259 x 10 x 44	
		441200	Luc		2398401	[o] 23984 18		Ate		2404301	[o] 24043 16.3	
John Cooper Works GP	09/12→	160 / 218	Bre		2431601	[o] 24316 17		Ate	epad	2404381	[o] 24043 16.3	
				PRO	92255003	ø 316 x 22 x 45.2			PRO	92175003	ø 259 x 10 x 44	
		441300	Luc		2391601	[o] 23916 17.8	⊖ sport pack.	Luc		2428901	[o] 24289 17	
One D	06/09→07/10	66 / 90			98036200	L807				98036300	L1127	
			Bre		82517600			Luc		82060100		

		30 kW / hp								
MINI (R56) 10/06→07/10										
One D	06/09→07/10	441300 66 / 90	PRO	92157903	ø 280 x 22 x 44.1	⊖ sport pack.	PRO	92175003	ø 259 x 10 x 44	
				TPM0010				TPM0010		
MINI Cabriolet (R52) 07/04→11/07 → MINI Convertible (R52), Page 712										
MINI Cabriolet (R57) 03/08→ → MINI Convertible (R57), Page 712										
MINI CLUBMAN (R55) 10/07→02/10										
Cooper	10/07→	441400 88 / 120	Luc	2391601	[o] 23916 17.8		Luc	2428901	[o] 24289 17	
				98036200	L807	→08/10		98036300	L1127	→08/10
				98044800	L815	08/10→		98044900	L1140	08/10→
			PRO	92157903	ø 280 x 22 x 44.1		Luc	82060100		
				TPM0010			PRO	92175003	ø 259 x 10 x 44	
								TPM0010		
Cooper Cooper	03/10→ 03/10→	441500 85 / 115 90 / 122	Luc	2391601	[o] 23916 17.8	⊖ sport pack.	Luc	2428901	[o] 24289 17	
				98036200	L807	→08/10		98036300	L1127	→08/10
				98044800	L815	08/10→		98044900	L1140	08/10→
			Bre	82517600			Luc	82060100		
			PRO	92157903	ø 280 x 22 x 44.1	⊖ sport pack.	PRO	92175003	ø 259 x 10 x 44	
				TPM0010				TPM0010		
Cooper D	10/07→	441600 80 / 109	Luc	2391601	[o] 23916 17.8		Luc	2428901	[o] 24289 17	
				98036200	L807	⊕ sports susp. Ø 316 mm		98036300	L1127	⊕ sports susp.
				98044800	L815	⊖ sports susp.		98044900	L1140	⊖ sports susp.
			PRO	92157903	ø 280 x 22 x 44.1		Luc	82060100		
				TPM0010			PRO	92175003	ø 259 x 10 x 44	
								TPM0010		
Cooper D	03/10→	441700 82 / 112	Luc	2391601	[o] 23916 17.8	⊖ sports susp.	Luc	2428901	[o] 24289 17	
			Bre	2447801	[o] 24478 14.8	⊕ sports susp. Ø 316 mm		98036300	L1127	⊕ sports susp.
				98036200	L807	⊕ sports susp. Ø 316 mm		98044900	L1140	⊖ sports susp.
				98044800	L815	⊖ sports susp.	Luc	82060100		
			Bre	82517600		Ø 316 mm ⊕ sports susp.	PRO	92175003	ø 259 x 10 x 44	
			PRO	92157903	ø 280 x 22 x 44.1	⊖ sports susp.		TPM0010		
			PRO	92196703	ø 294 x 22 x 44	⊕ sports susp.				
				TPM0010						
Cooper D Cooper SD Cooper SD	02/11→ 02/11→ 02/11→	441800 82 / 112 100 / 136 105 / 143	Luc	2391601	[o] 23916 17.8	⊖ sport pack.	Luc	2428901	[o] 24289 17	
				98044800	L815			98044900	L1140	
			Bre	82517600			Luc	82060100		
			PRO	92157903	ø 280 x 22 x 44.1		PRO	92175003	ø 259 x 10 x 44	
				TPM0010				TPM0010		
Cooper S	10/07→	441900 120 / 163	Luc	2398401	[o] 23984 18		Luc	2428901	[o] 24289 17	
				98036200	L807	→08/10		98036300	L1127	→08/10
				98044800	L815	08/10→		98044900	L1140	08/10→
			PRO	92183503	ø 294 x 22 x 44		Luc	82060100		
				TPM0010			PRO	92175003	ø 259 x 10 x 44	

		kW / hp									
MINI CLUBMAN (R55) 10/07→02/10											
		441900							TPM0010		
Cooper S	10/07→	120 / 163							91049300	ø 185 x 20	
		442000	Luc		2398401	[o] 23984 18		Luc	2428901	[o] 24289 17	
Cooper S	10/07→	128 / 174			98036200	L807	→08/10		98036300	L1127	→08/10
Cooper S	03/10→	135 / 184			98044800	L815	08/10→		98044900	L1140	08/10→
Cooper S	03/10→	147 / 200		PRO	92183503	ø 294 x 22 x 44		Luc	82060100		
					TPM0010				92175003	ø 259 x 10 x 44	
									TPM0010		
		442100	Bre		2447801	[o] 24478 14.8		Luc	2428901	[o] 24289 17	
John Cooper Works	03/08→	155 / 211			98036200	L807	→08/10		98036300	L1127	→08/10
					98044800	L815	08/10→		98044900	L1140	08/10→
			Bre		82517600			Luc	82060100		
				PRO	92255003	ø 316 x 22 x 45.2			TPM0010		
					TPM0010						
		442200	Bre		2447801	[o] 24478 14.8		Luc	2428901	[o] 24289 17	
John Cooper Works	10/08→	141 / 192			98036200	L807	→08/10		98036300	L1127	→08/10
					98044800	L815	08/10→		98044900	L1140	08/10→
			Bre		82517600		→10/11		TPM0010		
				PRO	92255003	ø 316 x 22 x 45.2	→11/11				
					TPM0010						
		442300	Luc		2391601	[o] 23916 17.8	⊖ sport pack.	Luc	2428901	[o] 24289 17	
One	03/09→02/10	70 / 95			98036200	L807			98036300	L1127	
			Bre		82517600			Luc	82060100		
				PRO	92157903	ø 280 x 22 x 44.1	⊖ sports susp.		92175003	ø 259 x 10 x 44	
					TPM0010				TPM0010		
		442400	Luc		2391601	[o] 23916 17.8	⊖ sport pack.	Luc	2428901	[o] 24289 17	
One	03/10→	72 / 98	Bre		2447801	[o] 24478 14.8	⊕ sport pack.		98036300	L1127	→08/10
					98036200	L807	→08/10		98044900	L1140	08/10→
					98044800	L815	08/10→	Luc	82060100		
			Bre		82517600				92175003	ø 259 x 10 x 44	
				PRO	92157903	ø 280 x 22 x 44.1	⊖ sport pack.		TPM0010		
					TPM0010						
		442500	Luc		2391601	[o] 23916 17.8	⊖ sport pack.	Luc	2428901	[o] 24289 17	
One D	03/10→	66 / 90			98036200	L807	→08/10		98036300	L1127	→08/10
					98044800	L815	08/10→		98044900	L1140	08/10→
			Bre		82517600			Luc	82060100		
				PRO	92157903	ø 280 x 22 x 44.1	⊖ sports susp.		92175003	ø 259 x 10 x 44	
					TPM0010				TPM0010		

MINI CLUBMAN Estate (R55) 10/07→02/10 → MINI CLUBMAN (R55), Page 710

MINI CLUBMAN Kombi (R55) 10/07→02/10 → MINI CLUBMAN (R55), Page 710

		kW / hp											
MINI CLUBVAN (R55) 12/12→													
		442600	Luc		2391601	[o] 23916 17.8	⊖ sport pack.	Luc		2428901	[o] 24289 17	
Cooper	12/12→	90 / 122			98044800	L815				98044900	L1140	
			Bre		82517600			Luc		82060100		
				PRO	92157903	ø 280 x 22 x 44.1	⊖ sport pack.		PRO	92175003	ø 259 x 10 x 44	
					TPM0010					TPM0010		
		442700	Luc		2391601	[o] 23916 17.8	⊖ sports susp.	Luc		2428901	[o] 24289 17	
Cooper D	12/12→	82 / 112	Bre		2447801	[o] 24478 14.8	⊕ sports susp. Ø 316 mm			98036300	L1127	⊕ sports susp.
					98036200	L807	⊕ sports susp. Ø 316 mm			98044900	L1140	⊖ sports susp.
					98044800	L815	⊖ sports susp.	Luc		82060100		
			Bre		82517600		Ø 316 mm ⊕ sports susp.		PRO	92175003	ø 259 x 10 x 44	
				PRO	92157903	ø 280 x 22 x 44.1	⊖ sports susp.			TPM0010		
				PRO	92196703	ø 294 x 22 x 44	⊕ sports susp.					
					TPM0010							
		442800	Luc		2391601	[o] 23916 17.8	⊖ sport pack.	Luc		2428901	[o] 24289 17	
One	12/12→	72 / 98	Bre		2447801	[o] 24478 14.8	⊕ sport pack.			98044900	L1140	
					98044800	L815		Luc		82060100		
			Bre		82517600				PRO	92175003	ø 259 x 10 x 44	
				PRO	92157903	ø 280 x 22 x 44.1	⊖ sport pack.			TPM0010		
					TPM0010							
MINI Convertible (R52) 07/04→11/07													
		442900	Ate		2328101	[o] 23281 18.3		Ate		2404301	[o] 24043 16.3	
Cooper	07/04→11/07	85 / 116										
Cooper S	07/04→11/07	120 / 163	Ate		2328181	[o] 23281 18.3		Ate		2404381	[o] 24043 16.3	
Cooper S	07/04→11/07	125 / 170										
One	07/04→11/07	66 / 90										
					98030200	L885				98030300	L1095	
			Ate		82032000			Ate		82062900		
			Ate		82062900			Ate		82503500		
					92107500	ø 276 x 22 x 44			PRO	92107603	ø 259 x 10 x 44	→07/06
				PRO	92107503	ø 276 x 22 x 44			PRO	92175003	ø 259 x 10 x 44	07/06→
					TPM0010					TPM0010		
		443000	Luc		2398401	[o] 23984 18		Ate		2404301	[o] 24043 16.3	
John Cooper Works	07/04→11/07	155 / 210		PRO	92183503	ø 294 x 22 x 44	07/06→	Ate		2404381	[o] 24043 16.3	
				PRO	92183603	ø 294 x 22 x 44	→07/06		PRO	92107603	ø 259 x 10 x 44	→07/06
									PRO	92175003	ø 259 x 10 x 44	07/06→
MINI Convertible (R57) 03/08→													
		443100	Luc		2391601	[o] 23916 17.8		Luc		2428901	[o] 24289 17	
Cooper	03/09→	85 / 116										
Cooper	03/09→	88 / 120	Luc		2398401	[o] 23984 18	⊕ John Cooper Works			98036300	L1127	→08/10
					98036200	L807	→08/10			98044900	L1140	08/10→
					98044800	L815	08/10→	Luc		82060100		
				PRO	92157903	ø 280 x 22 x 44.1			PRO	92175003	ø 259 x 10 x 44	
					TPM0010					TPM0010		
		443200	Luc		2391601	[o] 23916 17.8	⊖ sport pack.	Luc		2428901	[o] 24289 17	
Cooper	03/10→	90 / 122										
One	03/10→	72 / 98										

		kW / hp									
MINI Convertible (R57) 03/08→											
		443200									
Cooper	03/10→	90 / 122									
One	03/10→	72 / 98									
					98036200	L807	→08/10		**98036300**	L1127	→08/10
					98044800	L815	08/10→		**98044900**	L1140	08/10→
			Bre		**82517600**			Luc	**82060100**		
				PRO	**92157903**	ø 280 x 22 x 44.1	⊖ sport pack.	PRO	**92175003**	ø 259 x 10 x 44	
					TPM0010				**TPM0010**		
		443300	Luc		**2391601**	[o] 23916 17.8	⊖ sports susp.	Luc	**2428901**	[o] 24289 17	
Cooper D	06/10→	82 / 112	Bre		**2447801**	[o] 24478 14.8	⊕ sports susp. Ø 316 mm		**98036300**	L1127	⊕ sports susp.
					98036200	L807	⊕ sports susp. Ø 316 mm		**98044900**	L1140	⊖ sports susp.
					98044800	L815	⊖ sports susp.	Luc	**82060100**		
			Bre		**82517600**		Ø 316 mm ⊕ sports susp.	PRO	**92175003**	ø 259 x 10 x 44	
				PRO	**92157903**	ø 280 x 22 x 44.1	⊖ sports susp.	PRO	**92255003**	ø 316 x 22 x 45.2	⊕ sports susp.
				PRO	**92196703**	ø 294 x 22 x 44	⊕ sports susp.		**TPM0010**		
					TPM0010						
		443400	Luc		**2391601**	[o] 23916 17.8	⊖ sport pack.	Luc	**2428901**	[o] 24289 17	
Cooper D	02/11→	82 / 112									
Cooper SD	02/11→	105 / 143			**98044800**	L815			**98044900**	L1140	
			Bre		**82517600**			Luc	**82060100**		
				PRO	**92157903**	ø 280 x 22 x 44.1		PRO	**92175003**	ø 259 x 10 x 44	
					TPM0010				**TPM0010**		
		443500	Luc		**2398401**	[o] 23984 18		Luc	**2428901**	[o] 24289 17	
Cooper S	03/09→	128 / 174									
Cooper S	03/10→	135 / 184			**98036200**	L807	→08/10		**98036300**	L1127	→08/10
Cooper S	03/10→	147 / 200			**98044800**	L815	08/10→		**98044900**	L1140	08/10→
				PRO	**92183503**	ø 294 x 22 x 44		Luc	**82060100**		
					TPM0010			PRO	**92175003**	ø 259 x 10 x 44	
									TPM0010		
		443600	Bre		**2447801**	[o] 24478 14.8		Luc	**2428901**	[o] 24289 17	
John Cooper Works	03/08→	155 / 211									
					98036200	L807	→08/10		**98036300**	L1127	
					98044800	L815	08/10→		**TPM0010**		
			Bre		**82517600**						
					TPM0010						
MINI COUNTRYMAN (R60) 06/10→											
		443700	Luc		**2398404**	[o] 23984 18	⊕ USA	Luc	**2547801**	[o] 25478 16.8	⊕ USA →07/11
Cooper	06/10→	85 / 115									
Cooper	06/10→	90 / 122			**98044600**	L910			**98044700**	L960	
Cooper S	06/10→	135 / 184									
Cooper S ALL4	06/10→	120 / 163									
Cooper S ALL4	06/10→	135 / 184			**TPM0003**				**TPM0003**		
		443800	Luc		**2398404**	[o] 23984 18		Luc	**2547801**	[o] 25478 16.8	
Cooper	09/10→	88 / 120									
Cooper D	06/10→	82 / 112									
Cooper D	02/11→	82 / 112			**98044600**	L910			**98044700**	L960	
Cooper D ALL4	06/10→	82 / 112									
Cooper D ALL4	02/11→	82 / 112									
Cooper S	07/14→	140 / 190			**TPM0003**				**TPM0003**		
Cooper SD	02/11→	105 / 143									
Cooper SD ALL4	02/11→	100 / 136									
Cooper SD ALL4	02/11→	105 / 143									
Cooper S JCW	09/12→	160 / 218									
John Cooper Works ALL4	09/12→	155 / 211									
One	06/10→	72 / 98									
One D	06/10→	66 / 90									
		443900	Luc		**2398404**	[o] 23984 18			**98044700**	L960	
Cooper S	02/12→	147 / 200									
					98044600	L910			**TPM0003**		

		kW / hp											
MINI COUNTRYMAN (R60) 06/10→													
443900					TPM0003								
Cooper S	02/12→	147 / 200											
444000			Luc		2398404	[o] 23984 18	⊕ USA			98044700	L960		
Cooper S ALL4	07/14→	140 / 190			98044600	L910				TPM0003			
					TPM0003								
MINI Coupe (R58) 09/11→													
444100			Luc		2391601	[o] 23916 17.8	⊖ sport pack.		Luc	2428901	[o] 24289 17		
Cooper	09/11→	85 / 115											
Cooper	09/11→	90 / 122			98044800	L815				98044900	L1140		
Cooper SD	09/11→	100 / 136											
Cooper SD	09/11→	105 / 143	Bre		82517600				Luc	82060100			
				PRO	92157903	ø 280 x 22 x 44.1				PRO 92175003	ø 259 x 10 x 44		
					TPM0010					TPM0010			
444200			Luc		2398401	[o] 23984 18			Luc	2428901	[o] 24289 17		
Cooper S	09/11→	120 / 163											
Cooper S	09/11→	135 / 184			98044800	L815				98044900	L1140		
Cooper S	09/11→	147 / 200		PRO	92183503	ø 294 x 22 x 44			Luc	82060100			
					TPM0010					PRO 92175003	ø 259 x 10 x 44		
										TPM0010			
444300			Bre		2447801	[o] 24478 14.8			Luc	2428901	[o] 24289 17		
John Cooper Works	09/11→	155 / 211											
					98044800	L815				98044900	L1140		
			Bre		82517600				Luc	82060100			
				PRO	92255003	ø 316 x 22 x 45.2				TPM0010			
					TPM0010								
MINI PACEMAN (R61) 04/12→													
444400			Luc		2398404	[o] 23984 18			Luc	2547801	[o] 25478 16.8		
Cooper	04/12→	90 / 122											
Cooper	05/13→	88 / 120			98044600	L910				98044700	L960		
Cooper D	09/12→	82 / 112											
Cooper D ALL4	09/12→	82 / 112			TPM0003					TPM0003			
Cooper D ALL4	09/12→	82 / 112											
Cooper S	04/12→	135 / 184											
Cooper S	07/14→	140 / 190											
Cooper S ALL4	04/12→	135 / 184											
Cooper S ALL4	07/14→	140 / 190											
Cooper SD	10/12→	105 / 143											
Cooper SD ALL4	10/12→	105 / 143											
John Cooper Works	09/12→	155 / 211											
John Cooper Works	09/12→	160 / 218											
MINI Roadster (R59) 02/12→													
444500			Luc		2391601	[o] 23916 17.8	⊖ sport pack.		Luc	2428901	[o] 24289 17		
Cooper	02/12→	85 / 115											
Cooper	02/12→	90 / 122			98044800	L815				98044900	L1140		
Cooper SD	02/12→	100 / 136											
Cooper SD	02/12→	105 / 143	Bre		82517600				Luc	82060100			
				PRO	92157903	ø 280 x 22 x 44.1				PRO 92175003	ø 259 x 10 x 44		
					TPM0010					TPM0010			
444600			Luc		2398401	[o] 23984 18			Luc	2428901	[o] 24289 17		
Cooper S	02/12→	120 / 163											
Cooper S	02/12→	135 / 184			98044800	L815				98044900	L1140		
Cooper S	02/12→	147 / 200		PRO	92183503	ø 294 x 22 x 44			Luc	82060100			
					TPM0010					PRO 92175003	ø 259 x 10 x 44		
										TPM0010			
444700			Bre		2447801	[o] 24478 14.8			Luc	2428901	[o] 24289 17		
John Cooper Works	02/12→	155 / 211											
					98044800	L815				98044900	L1140		
			Bre		82517600				Luc	82060100			

MINI

MINI

kW / hp

MINI Roadster (R59) 02/12→

John Cooper Works	02/12→	444700 155 / 211		PRO	92255003	ø 316 x 22 x 45.2					TPM0010			
					TPM0010									

MITSUBISHI

MITSUBISHI

kW / hp

3000 GT (Z16A) 06/92→08/99

3.0 i 24V 4WD (Z16A)	06/92→08/99	444800 210 / 286	Ake		2428601	[+] 23286 14.7	→06/99		Sum		2349201	[+] 23492 16.5	→06/99	
				PRO	92178703	ø 296 x 30 x 45				PRO	92171303	ø 284 x 20 x 53.3		

AIRTREK I (CU_W) 05/03→12/12 → OUTLANDER I (CU_W), Page 732

ASPIRE VI (EA_) 09/96→10/04 → GALANT VI (EA_), Page 722

ASX (GA_W_) 02/10→

1.6	05/10→	444900 85 / 116	Ake		2358401	[+] 23584 16			Ake		2358202	[+] 23582 15.5	→08/12	
1.6	06/10→	86 / 117												
1.8	02/10→	102 / 139	Ake		82507300				Ake		2568801	[+] 25688 14.3	08/12→	
1.8 4WD	02/10→	102 / 139												
1.8 DI-D	06/10→	85 / 116		PRO	92257603	ø 294 x 26 x 45.6			Ake		82501800		→08/12	
1.8 DI-D	06/10→	110 / 150								PRO	92255103	ø 302 x 10 x 60.1	→08/12	
1.8 DI-D 4WD	06/10→	85 / 116												
1.8 DI-D 4WD	06/10→	110 / 150												
2.0 i	06/10→	110 / 150												
2.0 i	06/10→	118 / 160												
2.0 i 4WD	06/10→	110 / 150												
2.0 i 4WD	06/10→	118 / 160												
2.0 Flex	06/10→	445000 110 / 150	Ake		2358401	[+] 23584 16			Ake		2358202	[+] 23582 15.5		
			Ake		82507300				Ake		82501800			
				PRO	92257603	ø 294 x 26 x 45.6	→2012-12-20			PRO	92255103	ø 302 x 10 x 60.1		
2.2 Di-D 4WD	04/13→	445100 110 / 150	Ake		2358401	[+] 23584 16			Ake		2568801	[+] 25688 14.3		

ASX Van (GA_W_) 06/10→

1.8 DI-D 4WD	06/10→	445200 110 / 150	Ake		2358401	[+] 23584 16			Ake		2358202	[+] 23582 15.5	→08/12	
			Ake		82507300				Ake		2568801	[+] 25688 14.3	08/12→	
				PRO	92257603	ø 294 x 26 x 45.6			Ake		82501800		→08/12	
										PRO	92255103	ø 302 x 10 x 60.1	→08/12	

Canter 07/86→

Canter 35	08/96→12/99	445300 69 / 94	Sum		2350101	[–] 23501 17.2								
Canter 35	07/98→	85 / 116												
Canter 35	09/01→	92 / 125												
Canter 60	07/86→	86 / 117												
Canter 60	07/86→	86 / 117												
Canter 55	09/01→	445400 92 / 125	Sum		2924201	[o] 29242 19.4								
Canter 60	08/96→	445500 100 / 136	Sum		2924201	[o] 29242 19.4			Sum		2924201	[o] 29242 19.4		
Canter 60	08/96→	100 / 136												
Canter 60	09/01→	105 / 143												
Canter 75	10/97→	100 / 136												
Canter 75	09/01→	105 / 143												

CANTER Platform/Chassis (FB_, FE_, FG_) 08/01→11/10

2.4	08/01→11/10	445600 97 / 132	Sum		2924201	[o] 29242 19.4								
4.2 TD	08/01→08/04	96 / 131												
3.0 TDi	08/01→07/05	445700 92 / 125	Sum		2350101	[–] 23501 17.2			Sum		2924201	[o] 29242 19.4		
											91076100	ø 190 x 47		
3.9 TDi	08/01→11/10	445800 105 / 143			2924001	[o] 29240 17.3					2924001	[o] 29240 17.3		
			Sum		2924201	[o] 29242 19.4			Sum		2924901	[o] 29249 19.3		
			Sum		2924901	[o] 29249 19.3					91076100	ø 190 x 47		
4.9 DiTD	08/05→11/10	445900 132 / 179			2924001	[o] 29240 17.3					2924001	[o] 29240 17.3		

CANTER Platform/Chassis (FB6_, FE5_, FE6_) 10/96→07/01

2.8 D	10/96→07/01	446000 69 / 94	Sum		2350101	[–] 23501 17.2								
2.8 TDi	10/98→07/01	85 / 116												

		kW / hp												
CANTER Platform/Chassis (FB6_, FE5_, FE6_) 10/96→07/01														
3.6 TDi	04/98→07/01	94 / 128	Sum		**2350101**	[–] 23501 17.2								
		446100	Sum		**2924201**	[o] 29242 19.4								
3.9 TDi	10/96→07/01	100 / 136												
4.2 TD	10/96→07/01	96 / 131												
CANTER Pritsche/Fahrgestell (FB_, FE_, FG_) 08/01→11/10 → CANTER Platform/Chassis (FB_, FE_, FG_), Page 715														
CANTER Pritsche/Fahrgestell (FB6_, FE5_, FE6_) 10/96→07/01 → CANTER Platform/Chassis (FB6_, FE5_, FE6_), Page 715														
CARISMA (DA_) 07/95→06/06														
		446200	Luc		**2192001**	[+] 21920 15.1	03/99→ →06/00 ⊕ rim size 14"	Ake		**2187202**	[+] 21872 14.5	⊕ rear disc brake Akebono
1.6 (DA1A)	07/95→06/06	66 / 90	Luc		**2198302**	[+] 21983 17.3	07/00→ ⊕ rim size 15"	Luc		**2354901**	[+] 23549 16.8	⊕ rear disc brake Lucas
			Luc		**2308001**	[+] 23080 15.1	→02/99 ⊕ rim size 13"	Luc		**82058900**		
			Luc		**82058900**					**82511600**		⊕ rear disc brake Akebono
			Luc		**82063500**		03/99→	Luc		**82063300**		
					92082900	ø 256 x 24 x 45.5	03/99→ →06/00 ⊕ rim size 14"	Ake		**91047100**	ø 203.2 x 37	⊕ rear drum brake Akebono
					92089400	ø 236 x 18 x 45	→02/99 ⊕ rim size 13"	Bos		**91056400**	ø 203.2 x 39	⊕ rear drum brake Bosch
					92103900	ø 256 x 24 x 45	03/99→ →06/00 ⊕ rim size 14"			**97030400**		
				PRO	**92100403**	ø 281 x 24 x 45.5	07/00→ ⊕ rim size 15"			**92128600**	ø 236 x 10 x 41	⊕ rear disc brake
										94026100	ø 203 x 42	
		446300	Luc		**2192001**	[+] 21920 15.1	03/99→ →06/00 ⊕ rim size 14"	Ake		**2187202**	[+] 21872 14.5	⊕ rear disc brake Akebono
1.6 (DA1A)	05/97→06/06	73 / 99										
1.6 (DA1A)	12/98→06/06	70 / 95	Luc		**2198302**	[+] 21983 17.3	07/00→ ⊕ rim size 15"	Luc		**2354901**	[+] 23549 16.8	⊕ rear disc brake Lucas
			Luc		**2308001**	[+] 23080 15.1	→02/99 ⊕ rim size 13"	Luc		**82058900**		
			Luc		**82058900**					**82511600**		⊕ rear disc brake Akebono
			Luc		**82063500**		03/99→	Luc		**82063300**		
					92082900	ø 256 x 24 x 45.5	03/99→ →06/00 ⊕ rim size 14"	Ake		**91047100**	ø 203.2 x 37	⊕ rear drum brake Akebono
					92089400	ø 236 x 18 x 45	→02/99 ⊕ rim size 13"	Bos		**91056400**	ø 203.2 x 39	⊕ rear drum brake Bosch
					92103900	ø 256 x 24 x 45	03/99→ →06/00 ⊕ rim size 14"			**97030400**		
				PRO	**92100403**	ø 281 x 24 x 45.5	07/00→ ⊕ rim size 15"	Bos		**84056400**	bore ø 19 ø 203.2 x 39	⊕ rear drum brake Bosch
										92128600	ø 236 x 10 x 41	⊕ rear disc brake
										94026100	ø 203 x 42	
		446400	Luc		**2198302**	[+] 21983 17.3		Ake		**2187202**	[+] 21872 14.5	⊕ rear disc brake Akebono
1.6 (DA1A)	09/00→06/06	76 / 103	Luc		**82058900**			Luc		**2354901**	[+] 23549 16.8	⊕ rear disc brake Lucas
			Luc		**82063500**			Luc		**82058900**		
				PRO	**92100403**	ø 281 x 24 x 45.5				**82511600**		⊕ rear disc brake Akebono
								Luc		**82063300**		
								Ake		**91047100**	ø 203.2 x 37	⊕ rear drum brake Akebono
								Bos		**91056400**	ø 203.2 x 39	⊕ rear drum brake Bosch
										92128600	ø 236 x 10 x 41	⊕ rear disc brake
										94030100	ø 203,2 x 42	
		446500	Luc		**2192001**	[+] 21920 15.1	→06/00 ⊕ rim size 14"	Ake		**2187202**	[+] 21872 14.5	⊕ rear disc brake Akebono
1.8 (DA2A)	07/95→06/06	85 / 116	Luc		**2198302**	[+] 21983 17.3	03/99→ ⊕ rim size 15"	Luc		**2354901**	[+] 23549 16.8	⊕ rear disc brake Lucas
			Luc		**82058900**			Luc		**82058900**		
			Luc		**82063500**					**82511600**		⊕ rear disc brake Akebono

30 kW / hp

CARISMA (DA_) 07/95→06/06

446500													
1.8 (DA2A)	07/95→06/06	85 / 116		92082900	ø 256 x 24 x 45.5	→06/00 ⊕ rim size 14"	Luc	82063300		
				92103900	ø 256 x 24 x 45	→06/00 ⊕ rim size 14"	Ake	91047100	ø 203.2 x 37	⊕ rear drum brake Akebono
			PRO	92100403	ø 281 x 24 x 45.5	03/99→ ⊕ rim size 15"	Bos	91056400	ø 203.2 x 39	⊕ rear drum brake Bosch
								97030400		
							PRO	92083003	ø 260 x 10 x 41	⊕ rear disc brake
								94030100	ø 203,2 x 42	
446600			Luc	2192001	[+] 21920 15.1	→06/00 ⊕ rim size 14"	Ake	2187202	[+] 21872 14.5	⊕ rear disc brake Akebono
1.8 16V (DA2A)	07/95→06/06	103 / 140								
1.8 16V GDI (DA2A)	09/97→06/06	92 / 125	Luc	2198302	[+] 21983 17.3	03/99→ ⊕ rim size 15"	Luc	2354901	[+] 23549 16.8	⊕ rear disc brake Lucas
			Luc	82058900			Luc	82058900		
			Luc	82063300				82511600		⊕ rear disc brake Akebono
			Luc	82063500			Luc	82063300		
				92082900	ø 256 x 24 x 45.5	→06/00 ⊕ rim size 14"	Ake	91047100	ø 203.2 x 37	⊕ rear drum brake Akebono
				92103900	ø 256 x 24 x 45	→06/00 ⊕ rim size 14"	Bos	91056400	ø 203.2 x 39	⊕ rear drum brake Bosch
			PRO	92100403	ø 281 x 24 x 45.5	03/99→ ⊕ rim size 15"		97030400		
							PRO	92083003	ø 260 x 10 x 41	⊕ rear disc brake
								94030100	ø 203,2 x 42	
446700			Luc	2198302	[+] 21983 17.3		Ake	2187202	[+] 21872 14.5	⊕ rear disc brake Akebono
1.8 GDI (DA2A)	10/00→06/06	90 / 122	Luc	82058900			Luc	2354901	[+] 23549 16.8	⊕ rear disc brake Lucas
			Luc	82063500			Luc	82058900		
			PRO	92100403	ø 281 x 24 x 45.5			82511600		⊕ rear disc brake Akebono
							Luc	82063300		
							Ake	91047100	ø 203.2 x 37	⊕ rear drum brake Akebono
							Bos	91056400	ø 203.2 x 39	⊕ rear drum brake Bosch
								97030400		
							Bos	84056400	bore ø 19 ø 203.2 x 39	⊕ rear drum brake Bosch
							PRO	92083003	ø 260 x 10 x 41	⊕ rear disc brake
								94030100	ø 203,2 x 42	⊕ rear drum brake
446800			Luc	2198302	[+] 21983 17.3		Ake	2187202	[+] 21872 14.5	⊕ rear disc brake Akebono
1.9 DI-D	09/00→06/06	85 / 115								
1.9 DI-D (DA5A)	09/00→06/06	75 / 102	Luc	82058900			Luc	2354901	[+] 23549 16.8	⊕ rear disc brake Lucas
			Luc	82063500			Luc	82058900		
			PRO	92100403	ø 281 x 24 x 45.5			82511600		⊕ rear disc brake Akebono
							Luc	82063300		
							Ake	91047100	ø 203.2 x 37	⊕ rear drum brake Akebono
							Bos	91056400	ø 203.2 x 39	⊕ rear drum brake Bosch
								92128600	ø 236 x 10 x 41	⊕ rear disc brake
446900			Luc	2192001	[+] 21920 15.1	03/99→ ⊕ rim size 14"	Ake	2187202	[+] 21872 14.5	⊕ rear disc brake Akebono
1.9 TD (DA4A)	10/96→09/00	66 / 90								
			Luc	2308001	[+] 23080 15.1	→02/99 ⊕ rim size 13"	Luc	2354901	[+] 23549 16.8	⊕ rear disc brake Lucas
			Luc	82058900			Luc	82058900		
			Luc	82063300		→02/99		82511600		⊕ rear disc brake Akebono
			Luc	82063500		03/99→	Luc	82063300		

I - M

		kW / hp										
CARISMA (DA_) 07/95→06/06												
1.9 TD (DA4A)	10/96→09/00	446900 66 / 90		92082900	ø 256 x 24 x 45.5	03/99→ ⊕ rim size 14"	Ake	91047100	ø 203.2 x 37	⊕ rear drum brake Akebono
				92089400	ø 236 x 18 x 45	→02/99 ⊕ rim size 13"	Bos	91056400	ø 203.2 x 39	⊕ rear drum brake Bosch
				92103900	ø 256 x 24 x 45	03/99→ ⊕ rim size 14"		97030400		
							Bos	84056400	bore ø 19 ø 203.2 x 39	⊕ rear drum brake Bosch
								92128600	ø 236 x 10 x 41	⊕ rear disc brake
								94026100	ø 203 x 42	
								94030100	ø 203,2 x 42	
CARISMA Saloon (DA_) 09/96→06/06												
1.3 (DA6A)	09/00→10/04	447000 55 / 75	Luc	2198302	[+] 21983 17.3		Ake	2187202	[+] 21872 14.5	⊕ rear disc brake Akebono
			Luc	82058900			Luc	2354901	[+] 23549 16.8	⊕ rear disc brake Lucas
			Luc	82063500			Luc	82058900		
				PRO 92100403	ø 281 x 24 x 45.5			82511600		⊕ rear disc brake Akebono
							Luc	82063300		
							Ake	91047100	ø 203.2 x 37	⊕ rear drum brake Akebono
							Bos	91056400	ø 203.2 x 39	⊕ rear drum brake Bosch
								97030400		
							Bos	84056400	bore ø 19 ø 203.2 x 39	Bosch ⊕ rear drum brake
								92128600	ø 236 x 10 x 41	⊕ rear disc brake
								94026100	ø 203 x 42	
1.6 (DA1A)	09/96→06/06	447100 66 / 90	Luc	2192001	[+] 21920 15.1	03/99→ →06/00 ⊕ rim size 14"	Ake	2187202	[+] 21872 14.5	⊕ rear disc brake Akebono
1.6 (DA1A)	05/97→06/06	73 / 99	Luc	2198302	[+] 21983 17.3	07/00→ ⊕ rim size 15"	Luc	2354901	[+] 23549 16.8	⊕ rear disc brake Lucas
			Luc	2308001	[+] 23080 15.1	→02/99 ⊕ rim size 13"	Luc	82058900		
			Luc	82058900				82511600		⊕ rear disc brake Akebono
			Luc	82063300		→02/99	Luc	82063300		
			Luc	82063500		03/99→	Ake	91047100	ø 203.2 x 37	⊕ rear drum brake Akebono
				92082900	ø 256 x 24 x 45.5	03/99→ →06/00 ⊕ rim size 14"	Bos	91056400	ø 203.2 x 39	⊕ rear drum brake Bosch
				92089400	ø 236 x 18 x 45	→02/99 ⊕ rim size 13"		97030400		
				92103900	ø 256 x 24 x 45	03/99→ →06/00 ⊕ rim size 14"	Bos	84056400	bore ø 19 ø 203.2 x 39	Bosch ⊕ rear drum brake
				PRO 92100403	ø 281 x 24 x 45.5	07/00→ ⊕ rim size 15"		92128600	ø 236 x 10 x 41	⊕ rear disc brake
								94026100	ø 203 x 42	
1.6 (DA1A)	12/98→06/06	447200 70 / 95	Luc	2192001	[+] 21920 15.1	03/99→ →06/00 ⊕ rim size 14"	Ake	2187202	[+] 21872 14.5	⊕ rear disc brake Akebono
			Luc	2198302	[+] 21983 17.3	07/00→ ⊕ rim size 15"	Luc	2354901	[+] 23549 16.8	⊕ rear disc brake Lucas
			Luc	2308001	[+] 23080 15.1	→02/99 ⊕ rim size 13"	Luc	82058900		
			Luc	82058900				82511600		⊕ rear disc brake Akebono
			Luc	82063300		→02/99	Luc	82063300		
			Luc	82063500		03/99→	Ake	91047100	ø 203.2 x 37	⊕ rear drum brake Akebono
				92082900	ø 256 x 24 x 45.5	03/99→ →06/00 ⊕ rim size 14"	Bos	91056400	ø 203.2 x 39	⊕ rear drum brake Bosch
				92089400	ø 236 x 18 x 45	→02/99 ⊕ rim size 13"		97030400		
				92103900	ø 256 x 24 x 45	03/99→ →06/00 ⊕ rim size 14"		92128600	ø 236 x 10 x 41	⊕ rear disc brake
				PRO 92100403	ø 281 x 24 x 45.5	07/00→ ⊕ rim size 15"		94026100	ø 203 x 42	

30 kW / hp

CARISMA Saloon (DA_) 09/96→06/06

1.6 (DA1A)	09/00→06/06	447300 76 / 103	Luc		2198302	[+] 21983 17.3		Ake		2187202	[+] 21872 14.5	⊕ rear disc brake Akebono
			Luc		82058900			Luc		2354901	[+] 23549 16.8	⊕ rear disc brake Lucas
			Luc		82063500			Luc		82058900		
				PRO	92100403	ø 281 x 24 x 45.5				82511600		⊕ rear disc brake Akebono
								Luc		82063300		
								Ake		91047100	ø 203.2 x 37	⊕ rear drum brake Akebono
								Bos		91056400	ø 203.2 x 39	⊕ rear drum brake Bosch
										92128600	ø 236 x 10 x 41	⊕ rear disc brake
										94030100	ø 203,2 x 42	
1.8 (DA2A)	09/96→06/06	447400 85 / 115	Luc		2192001	[+] 21920 15.1	→06/00 ⊕ rim size 14"	Ake		2187202	[+] 21872 14.5	⊕ rear disc brake Akebono
1.8 16V GDI (DA2A)	09/97→06/06	92 / 125	Luc		2198302	[+] 21983 17.3	03/99→ ⊕ rim size 15"	Luc		2354901	[+] 23549 16.8	⊕ rear disc brake Lucas
			Luc		82058900			Luc		82058900		
			Luc		82063300					82511600		⊕ rear disc brake Akebono
			Luc		82063500			Luc		82063300		
					92082900	ø 256 x 24 x 45.5	→06/00 ⊕ rim size 14"	Ake		91047100	ø 203.2 x 37	⊕ rear drum brake Akebono
					92103900	ø 256 x 24 x 45	→06/00 ⊕ rim size 14"	Bos		91056400	ø 203.2 x 39	⊕ rear drum brake Bosch
				PRO	92100403	ø 281 x 24 x 45.5	03/99→ ⊕ rim size 15"			97030400		
								Bos		84056400	bore ø 19 ø 203.2 x 39	Bosch ⊕ rear drum brake
									PRO	92083003	ø 260 x 10 x 41	⊕ rear disc brake
										94030100	ø 203,2 x 42	
1.8 GDI (DA2A)	10/00→06/06	447500 90 / 122	Luc		2198302	[+] 21983 17.3	⊕ rim size 15"	Ake		2187202	[+] 21872 14.5	⊕ rear disc brake Akebono
			Luc		82058900			Luc		2354901	[+] 23549 16.8	⊕ rear disc brake Lucas
			Luc		82063300		optional	Luc		82058900		
			Luc		82063500		optional			82511600		⊕ rear disc brake Akebono
				PRO	92100403	ø 281 x 24 x 45.5	⊕ rim size 15"	Luc		82063300		
								Ake		91047100	ø 203.2 x 37	⊕ rear drum brake Akebono
								Bos		91056400	ø 203.2 x 39	⊕ rear drum brake Bosch
										97030400		
								Bos		84056400	bore ø 19 ø 203.2 x 39	Bosch ⊕ rear drum brake
									PRO	92083003	ø 260 x 10 x 41	⊕ rear disc brake
										94030100	ø 203,2 x 42	
1.9 DI-D	09/00→06/06	447600 85 / 115	Luc		2198302	[+] 21983 17.3		Ake		2187202	[+] 21872 14.5	⊕ rear disc brake Akebono
1.9 DI-D (DA5A)	09/00→06/06	75 / 102	Luc		82058900			Luc		2354901	[+] 23549 16.8	⊕ rear disc brake Lucas
			Luc		82063500			Luc		82058900		
				PRO	92100403	ø 281 x 24 x 45.5				82511600		⊕ rear disc brake Akebono
								Luc		82063300		
								Ake		91047100	ø 203.2 x 37	⊕ rear drum brake Akebono
								Bos		91056400	ø 203.2 x 39	⊕ rear drum brake Bosch
										92128600	ø 236 x 10 x 41	⊕ rear disc brake
1.9 TD (DA4A)	10/96→09/00	447700 66 / 90	Luc		2192001	[+] 21920 15.1	03/99→ ⊕ rim size 14"	Ake		2187202	[+] 21872 14.5	⊕ rear disc brake Akebono

I - M

		kW / hp										
CARISMA Saloon (DA_) 09/96→06/06												
		447700	Luc		2308001	[+] 23080 15.1	→02/99 ⊕ rim size 13"	Luc		2354901	[+] 23549 16.8	⊕ rear disc brake Lucas
1.9 TD (DA4A)	10/96→09/00	66 / 90	Luc		82058900			Luc		82058900		
			Luc		82063300		→02/99			82511600		⊕ rear disc brake Akebono
			Luc		82063500		03/99→	Luc		82063300		
					92082900	ø 256 x 24 x 45.5	03/99→ ⊕ rim size 14"	Ake		91047100	ø 203.2 x 37	⊕ rear drum brake Akebono
					92089400	ø 236 x 18 x 45	→02/99 ⊕ rim size 13"	Bos		91056400	ø 203.2 x 39	⊕ rear drum brake Bosch
					92103900	ø 256 x 24 x 45	03/99→ ⊕ rim size 14"			97030400		
								Bos		84056400	bore ø 19 ø 203.2 x 39	Bosch ⊕ rear drum brake
										92128600	ø 236 x 10 x 41	⊕ rear disc brake
										94026100	ø 203 x 42	
		447800	Luc		2198302	[+] 21983 17.3		Ake		2187202	[+] 21872 14.5	
2.0 16V GT EVO VI/VII	11/99→06/06	206 / 280								82511600		
CARISMA Stufenheck (DA_) 09/96→06/06 → CARISMA Saloon (DA_), Page 718												
CEDIA Stufenheck (CS_A, CT0) 09/03→ → LANCER Saloon (CS_A, CT0), Page 728												
CHALLENGER (K90, PA) 11/98→ → PAJERO SPORT (K90), Page 737												
CHALLENGER (K90) 11/98→ → PAJERO SPORT (K90), Page 737												
CHALLENGER II (KG_, KH_) 07/08→ → PAJERO SPORT II (KG_, KH_), Page 737												
COLT/RODEO (K7_T, K6_T) 06/96→12/07 → L 200 (K7_T, K6_T), Page 725												
COLT V (CJ_, CP_) 11/95→09/03												
		447900	Sum		2165001	[+] 21650 15						
1.5 CDTI (CJ2A)	06/96→09/03	69 / 94										
		448000	Sum		2165001	[+] 21650 15				91045801	ø 180 x 37	⊖ ABS
1300	09/00→09/03	60 / 82										
1600	09/00→09/03	76 / 103	Sum		82031200			Ake		91047100	ø 203.2 x 37	⊕ ABS
					92089400	ø 236 x 18 x 45				94025900	ø 180 x 46	⊖ ABS
										94026100	ø 203 x 42	⊕ ABS
		448100	Sum		2165001	[+] 21650 15				91045801	ø 180 x 37	⊖ ABS
1300 GL,GLX (CJ1A)	05/96→09/00	55 / 75										
1500 (CJ2A)	11/95→09/03	69 / 94										
1600 GLX (CJ4A)	05/96→09/00	66 / 90	Sum		82031200			Ake		91047100	ø 203.2 x 37	⊕ ABS
					92089400	ø 236 x 18 x 45				97030400		
										94025900	ø 180 x 46	⊖ ABS
										94026100	ø 203 x 42	⊕ ABS
COLT VI (Z3_A, Z2_A) 06/04→06/12												
		448200	Luc		2192003	[+] 21920 17.4		Luc		2354901	[+] 23549 16.8	⊕ rear disc brake
1.1	10/04→06/12	55 / 75										
1.3	06/04→06/12	70 / 95										
1.5 DI-D	08/04→06/12	50 / 68	Luc		82058900			Luc		82058900		
1.5 DI-D	08/04→06/12	70 / 95	Luc		82063500			Luc		82063300		
				PRO	92134803	ø 256 x 24 x 45.6				91068800	ø 203 x 38	⊕ rear drum brake
										97037400		⊕ rear drum brake
								Luc		84068800	bore ø 19 ø 203 x 38	
									PRO	92134903	ø 250 x 10 x 38.4	⊕ rear disc brake
		448300	Luc		2192003	[+] 21920 17.4		Luc		2354901	[+] 23549 16.8	⊕ rear disc brake
1.5	06/04→06/12	80 / 109										
1.5 (Z23)	07/06→06/12	77 / 105										
1.5 (Z27)	09/04→02/06	72 / 98	Luc		82058900			Luc		82058900		
			Luc		82063500			Luc		82063300		
				PRO	92134803	ø 256 x 24 x 45.6				91068800	ø 203 x 38	⊕ rear drum brake
										97037400		⊕ rear drum brake

		kW / hp										
COLT VI (Z3_A, Z2_A) 06/04→06/12												
		448300										
1.5	06/04→06/12	80 / 109							PRO	92134903	ø 250 x 10 x 38.4	⊕ rear disc brake
1.5 (Z23)	07/06→06/12	77 / 105										
1.5 (Z27)	09/04→02/06	72 / 98										
		448400	Luc		2198304	[+] 21983 16.5		Luc		2354901	[+] 23549 16.8	
1.5 CZT	03/05→06/12	110 / 150	Luc		82058900			Luc		82058900		
1.5 Ralliart R	02/10→06/12	120 / 163	Luc		82063500			Luc		82063300		
1.5 Turbo (Z23)	09/06→06/12	113 / 154			92204400	ø 281 x 26 x 46.5			PRO	92134903	ø 250 x 10 x 38.4	
COLT Cabriolet (RG) 05/06→07/09 → COLT CZC Convertible (RG), Page 721												
COLT Convertible (RG) 05/06→07/09 → COLT CZC Convertible (RG), Page 721												
COLT CZC Cabriolet (RG) 05/06→07/09 → COLT CZC Convertible (RG), Page 721												
COLT CZC Convertible (RG) 05/06→07/09												
		448500	Luc		2192003	[+] 21920 17.4		Luc		2354901	[+] 23549 16.8	
1.5	05/06→07/09	80 / 109	Luc		82058900			Luc		82058900		
			Luc		82063500			Luc		82063300		
				PRO	92134803	ø 256 x 24 x 45.6			PRO	92134903	ø 250 x 10 x 38.4	
		448600	Luc		2198304	[+] 21983 16.5		Luc		2354901	[+] 23549 16.8	
1.5 Turbo	05/06→07/09	110 / 150	Luc		82058900			Luc		82058900		
			Luc		82063500			Luc		82063300		
				PRO	92134803	ø 256 x 24 x 45.6			PRO	92134903	ø 250 x 10 x 38.4	
COLT Mk V (CJ_, CP_) 11/95→09/03 → COLT V (CJ_, CP_), Page 720												
COLT PLUS VII (Z2_W) 08/04→												
		448700						Ake		2527701	[+] 25277 14.5	⊕ rear disc brake
1.5	08/04→	77 / 105										
DELICA Bus (P0_W, P1_W, P2_W) 11/86→05/04 → L 300 Bus (P0_W, P1_W, P2_W), Page 726												
DELICA Kasten (P0_W, P1_W) 11/86→09/03 → L 300 Box (P0_W, P1_W), Page 726												
DION Großraumlimousine (CR_W) 12/99→12/05 → DION MPV (CR_W), Page 721												
DION MPV (CR_W) 12/99→12/05												
		448800		PRO	92198203	ø 276 x 26 x 45.5		Ake		91076500	ø 228.6 x 32	
1.8 16V 4WD	12/99→12/05	121 / 165								94037400	ø 228,6 x 39.6	
		448900			92082900	ø 256 x 24 x 45.5	→12/00	Ake		91076500	ø 228.6 x 32	
2.0 16V	12/99→10/05	99 / 135			92082900	ø 256 x 24 x 45.5	01/01→					
2.0 16V 4WD	12/99→10/05	99 / 135			92103900	ø 256 x 24 x 45	→12/00					
					92103900	ø 256 x 24 x 45	01/01→					
ECLIPSE II (D3_A) 12/95→04/99												
		449000	Sum		2164701	[+] 21647 16		Ake		2170602	[+] 21706 15.5	
2.0 Turbo 4WD	12/95→04/99	157 / 214										
2000 GS 16V (D32A)	12/95→04/99	107 / 146	Ake		82031100			Ake		82031100		
2000 GT 16V	12/95→04/99	157 / 214										
2400 GS 16V	09/98→04/99	105 / 143			92063000	ø 256 x 24 x 45.1	⊖ ABS			92063100	ø 265 x 10 x 49	
										91062900	ø 167 x 32	
ECLIPSE Mk II (D3_A) 12/95→04/99 → ECLIPSE II (D3_A), Page 721												
eK Hatchback (_H82_) 10/00→												
		449100			2527101	[+] 25271 15.3						
0.7	10/00→	37 / 50										
0.7 4WD	10/00→	37 / 50										
eK Schrägheck (_H82_) 10/00→ → eK Hatchback (_H82_), Page 721												
FTO Coupe (DE_A) 09/94→07/01												
		449200	Sum		2164701	[+] 21647 16		Ake		2187202	[+] 21872 14.5	
1.8 (DE2A)	09/94→07/01	92 / 125										
2.0 (DE3A)	09/94→07/01	127 / 173			92082900	ø 256 x 24 x 45.5				82511600		
2.0 (DE3A)	08/97→07/01	132 / 180			92103900	ø 256 x 24 x 45				92104000	ø 262 x 10 x 61.6	

		kW / hp											
FTO Coupe (DE_A) 09/94→07/01													
		449200											
1.8 (DE2A)	09/94→07/01	92 / 125											
2.0 (DE3A)	09/94→07/01	127 / 173											
2.0 (DE3A)	08/97→07/01	132 / 180											
		449300	Ake		2136301	[+] 21363 15.7		Ake		2187202	[+] 21872 14.5	
2.0 (DE3A)	09/94→07/01	147 / 200			92110700	ø 276 x 24 x 45				82511600		
									PRO	92198103	ø 260 x 10 x 41	
									PRO	92198103	ø 260 x 10 x 41	
GALANT VI (EA_) 09/96→10/04													
		449400	Ake		2136301	[+] 21363 15.7	12/97→ →03/00	Ake		2170602	[+] 21706 15.5	
2.0 (EA2A)	09/96→09/00	100 / 136	Sum		2164701	[+] 21647 16	→11/97	Ake		82031100		
			Ake		2358401	[+] 23584 16	04/00→			92104000	ø 262 x 10 x 61.6	
			Ake		82031100		12/97→ →03/00			91062900	ø 167 x 32	
			Ake		82507300		04/00→					
					92082900	ø 256 x 24 x 45.5	⊕ rim size 14"					
					92103900	ø 256 x 24 x 45	⊕ rim size 14"					
					92110500	ø 276 x 24 x 45	⊕ rim size 15"					
					92148700	ø 276 x 26 x 45.5	09/00→					
		449500	Ake		2358401	[+] 23584 16		Ake		2170602	[+] 21706 15.5	
2.0 (EA2A)	09/00→10/04	98 / 133	Ake		82507300			Ake		82031100		
					92082900	ø 256 x 24 x 45.5	⊕ rim size 14"			92104000	ø 262 x 10 x 61.6	
					92103900	ø 256 x 24 x 45	⊕ rim size 14"			91062900	ø 167 x 32	
					92110500	ø 276 x 24 x 45	⊕ rim size 15"					
					92148700	ø 276 x 26 x 45.5						
		449600	Ake		2136301	[+] 21363 15.7	12/97→ →03/00	Ake		2170602	[+] 21706 15.5	⊕ rear disc brake
2.0 TDI (EA6A)	09/96→10/04	66 / 90	Sum		2164701	[+] 21647 16	→11/97	Ake		82031100		⊕ rear disc brake
			Ake		2358401	[+] 23584 16	04/00→	Ake		91047100	ø 203.2 x 37	⊕ rear drum brake
			Ake		82031100		12/97→ →03/00			92104000	ø 262 x 10 x 61.6	⊕ rear disc brake
			Ake		82507300		04/00→			94033600	ø 203 x 44.5	⊕ rear drum brake
					92082900	ø 256 x 24 x 45.5	⊕ rim size 14"			91062900	ø 167 x 32	⊕ rear disc brake
					92103900	ø 256 x 24 x 45	⊕ rim size 14"					
					92110500	ø 276 x 24 x 45	⊕ rim size 15"					
					92148700	ø 276 x 26 x 45.5	09/00→					
		449700	Sum		2164701	[+] 21647 16	Sumitomo	Ake		2170602	[+] 21706 15.5	
2.4 GDI (EA3A)	02/99→09/00	110 / 150	Ake		2358401	[+] 23584 16	Akebono	Ake		82031100		
			Ake		82507300		Akebono			92104000	ø 262 x 10 x 61.6	
					92110500	ø 276 x 24 x 45						
					92148700	ø 276 x 26 x 45.5	09/00→					
		449800	Sum		2164701	[+] 21647 16	Sumitomo	Ake		2170602	[+] 21706 15.5	
2.4 GDI (EA3A)	09/00→10/04	106 / 144	Ake		2358401	[+] 23584 16	Akebono	Ake		82031100		
			Ake		82507300		Akebono			92104000	ø 262 x 10 x 61.6	
					92110500	ø 276 x 24 x 45						
					92148700	ø 276 x 26 x 45.5						
		449900	Ake		2136301	[+] 21363 15.7	12/97→ →02/00 ⊕ rim size 15"	Ake		2170602	[+] 21706 15.5	
2.5 V6 24V (EA5A)	09/96→09/00	120 / 163										

		kW / hp									
GALANT VI (EA_) 09/96→10/04											
2.5 V6 24V (EA5A)	09/96→09/00	449900 120 / 163	Sum	2164701	[+] 21647 16	→11/97 ⊕ rim size 14"	Ake	82031100		
			Sum	2164701	[+] 21647 16			92063100	ø 265 x 10 x 49	
			Ake	2358401	[+] 23584 16			92104000	ø 262 x 10 x 61.6	
			Ake	82031100		12/97→ →02/00		91062900	ø 167 x 32	
			Ake	82507300						
				92063000	ø 256 x 24 x 45.1	⊖ ABS				
				92110500	ø 276 x 24 x 45					
				92148700	ø 276 x 26 x 45.5	09/00→				
2.5 V6 24V (EA5A)	09/00→10/04	450000 118 / 160	Sum	2164701	[+] 21647 16		Ake	2170602	[+] 21706 15.5	
			Ake	2358401	[+] 23584 16	→10/03	Ake	82031100		
			Ake	82507300		→10/03		92063100	ø 265 x 10 x 49	
				92063000	ø 256 x 24 x 45.1	⊖ ABS		92104000	ø 262 x 10 x 61.6	
				92110500	ø 276 x 24 x 45			91062900	ø 167 x 32	
				92148700	ø 276 x 26 x 45.5					
GALANT VI Estate (EA_) 09/96→10/03										
2.0 (EA2W)	09/96→09/00	450100 100 / 136	Ake	2136301	[+] 21363 15.7	12/97→ →03/00	Ake	2170602	[+] 21706 15.5	
			Sum	2164701	[+] 21647 16	→11/97	Ake	82031100		
			Ake	2358401	[+] 23584 16	04/00→		92104000	ø 262 x 10 x 61.6	
			Ake	82031100		12/97→ →03/00		91062900	ø 167 x 32	
			Ake	82507300		04/00→				
				92082900	ø 256 x 24 x 45.5	⊕ rim size 14"				
				92103900	ø 256 x 24 x 45	⊕ rim size 14"				
				92110500	ø 276 x 24 x 45	⊕ rim size 15"				
				92148700	ø 276 x 26 x 45.5	09/00→				
2.0 (EA2W)	09/00→10/03	450200 98 / 133	Ake	2358401	[+] 23584 16		Ake	2170602	[+] 21706 15.5	
			Ake	82507300			Ake	82031100		
				92082900	ø 256 x 24 x 45.5	⊕ rim size 14"		92104000	ø 262 x 10 x 61.6	
				92103900	ø 256 x 24 x 45	⊕ rim size 14"		91062900	ø 167 x 32	
				92110500	ø 276 x 24 x 45	⊕ rim size 15"				
				92148700	ø 276 x 26 x 45.5					
2.0 TDI (EA6W)	09/96→10/03	450300 66 / 90	Ake	2136301	[+] 21363 15.7	12/97→ →03/00	Ake	2170602	[+] 21706 15.5	⊕ rear disc brake
			Sum	2164701	[+] 21647 16	→11/97	Ake	82031100		⊕ rear disc brake
			Ake	2358401	[+] 23584 16	04/00→	Ake	91047100	ø 203.2 x 37	⊕ rear drum brake
			Ake	82031100		12/97→ →03/00		92104000	ø 262 x 10 x 61.6	⊕ rear disc brake
			Ake	82507300		04/00→		94033600	ø 203 x 44.5	⊕ rear drum brake
				92082900	ø 256 x 24 x 45.5	⊕ rim size 14"		91062900	ø 167 x 32	⊕ rear disc brake
				92103900	ø 256 x 24 x 45	⊕ rim size 14"				
				92110500	ø 276 x 24 x 45	⊕ rim size 15"				
				92148700	ø 276 x 26 x 45.5	09/00→				
2.4 GDI (EA3W)	02/99→10/03	450400 110 / 150	Ake	2136301	[+] 21363 15.7		Ake	2170602	[+] 21706 15.5	

I - M

		kW / hp										
GALANT VI Estate (EA_) 09/96→10/03												
2.4 GDI (EA3W)	02/99→10/03	450400 110 / 150	Ake		**82507300**		Akebono	Ake		**82031100**		
					92110500	ø 276 x 24 x 45				**92104000**	ø 262 x 10 x 61.6	
					92148700	ø 276 x 26 x 45.5	09/00→					
2.4 GDI (EA3W)	09/00→10/03	450500 106 / 144	Ake		**2358401**	[+] 23584 16		Ake		**2170602**	[+] 21706 15.5	
			Ake		**82507300**		Akebono	Ake		**82031100**		
					92110500	ø 276 x 24 x 45				**92104000**	ø 262 x 10 x 61.6	
					92148700	ø 276 x 26 x 45.5						
2.5 V6 24V (EA5W)	09/96→09/00	450600 120 / 163	Ake		**2136301**	[+] 21363 15.7	→02/00	Ake		**2170602**	[+] 21706 15.5	
			Ake		**2358401**	[+] 23584 16	03/00→	Ake		**82031100**		
			Ake		**82031100**		12/97→ →02/00			**92063100**	ø 265 x 10 x 49	
			Ake		**82507300**					**92104000**	ø 262 x 10 x 61.6	
					92063000	ø 256 x 24 x 45.1	⊖ ABS			**91062900**	ø 167 x 32	
					92110500	ø 276 x 24 x 45						
					92148700	ø 276 x 26 x 45.5	09/00→					
2.5 V6 24V (EA5W)	09/00→10/03	450700 118 / 160	Ake		**2358401**	[+] 23584 16		Ake		**2170602**	[+] 21706 15.5	
			Ake		**82507300**			Ake		**82031100**		
					92063000	ø 256 x 24 x 45.1	⊖ ABS			**92063100**	ø 265 x 10 x 49	
					92110500	ø 276 x 24 x 45				**92104000**	ø 262 x 10 x 61.6	
					92148700	ø 276 x 26 x 45.5				**91062900**	ø 167 x 32	
GALANT VI Kombi (EA_) 09/96→10/03 → GALANT VI Estate (EA_), Page 723												
GALANT VI Saloon (EA_) 09/96→10/04 → GALANT VI (EA_), Page 722												
GALANT VI Stufenheck (EA_) 09/96→10/04 → GALANT VI (EA_), Page 722												
GALANT FORTIS SPORTBACK (CX_A) 10/07→ → LANCER SPORTBACK (CX_A), Page 729												
GALANT FORTIS Stufenheck (CY/Z_A) 03/07→ → LANCER Saloon (CY/Z_A), Page 729												
GALANT Mk VI (EA_) 09/96→10/04 → GALANT VI (EA_), Page 722												
GALANT Mk VI Estate (EA_) 09/96→10/03 → GALANT VI Estate (EA_), Page 723												
GALANT Mk VI Kombi (EA_) 09/96→10/03 → GALANT VI Estate (EA_), Page 723												
GALLOPER (JK-01) 09/98→12/03												
2.5 TD	09/98→12/03	450800 65 / 88	Sum		**2351801**	[+] 23518 17				**91055300**	ø 270 x 53	
2.5 TD intercooler	09/98→12/03	73 / 99			**82057100**							
3.0 V6	09/98→12/03	104 / 141			**92149400**	ø 277 x 22 x 45.2						
GRANDIS (N9_, N8_) 05/00→05/03												
3.0 GDi GLX 4WD	05/00→05/03	450900 158 / 215						Ake		**2337301**	[+] 23373 15	
GRANDIS (NA_W) 04/04→												
2.0 DI-D	09/05→	451000 100 / 136	Sum		**2348801**	[+] 23488 16		Ake		**2358202**	[+] 23582 15.5	
2.0 DI-D	02/07→	103 / 140	Sum		**82517500**			Ake		**82501800**		
2.4	04/04→	121 / 165			**92148300**	ø 290 x 26 x 45.7				**92148400**	ø 302 x 10 x 60.3	
2.4	04/04→	130 / 177		PRO	**92148303**	ø 290 x 26 x 45.7			PRO	**92148403**	ø 302 x 10 x 60.3	
										91068300	ø 190 x 32	
GTO Coupe (Z1_A) 05/96→09/00												
3.0 AWD	05/96→08/00	451100 163 / 222	Ake		**2428601**	[+] 24286 14.7		Sum		**2349201**	[+] 23492 16.5	
3.0 AWD	05/96→09/00	206 / 280							PRO	**92171303**	ø 284 x 20 x 53.3	
G-WAGON (K90) 11/98→ → PAJERO SPORT (K90), Page 737												

		kW / hp											
i (HA_) 01/06→													
		451200	Sum		2442301	[–] 24423 14.7	→09/10						
0.7	01/06→	42 / 57											
0.7	01/10→	38 / 52											
0.7	08/10→	47 / 64											
		451300	Sum		2442301	[–] 24423 14.7	→09/10						
i-MiEV	07/09→	47 / 64											
i-MiEV	01/10→	35 / 48	Sum		2442302	[+] 24423 14.7	10/10→ ⊕ EU						
			Sum		82076700								
IO (H6_W, H7_W) 03/99→06/07 → PAJERO PININ (H6_W, H7_W), Page 736													
L300 EXPRESS Box (P0_W, P1_W, SF, SG, SH, SJ, WA) 11/86→09/03 → L 300 Box (P0_W, P1_W), Page 726													
L300 EXPRESS Kasten (P0_W, P1_W, SF, SG, SH, SJ, WA) 11/86→09/03 → L 300 Box (P0_W, P1_W), Page 726													
L 200 (K7_T, K6_T) 06/96→12/07													
		451400	Sum		2308602	[+] 23086 16	06/00→		Ake		91050500	ø 254 x 52	
2.0 (K62T)	06/96→12/07	90 / 122											
2.5 D (K64T)	06/96→12/07	55 / 75	Ake		2329002	[+] 23290 15.5	→05/00				97015100		
			Sum		2387902	[+] 23879 15.5					94016300	ø 254,0 x 62	
			Ake		82032700								
					92166900	ø 254 x 23.8 x 39							
				PRO	92166903	ø 254 x 23.8 x 39							
		451500	Ake		2136301	[+] 21363 15.7			Ake		91050600	ø 270 x 53	
2.4 4WD (K75T)	06/96→12/07	97 / 132	Sum		2308602	[+] 23086 16					97031400		
			Ake		2329002	[+] 23290 15.5							
			Sum		2387902	[+] 23879 15.5							
			Ake		82032700								
					92079800	ø 276 x 24 x 45							
				PRO	92079803	ø 276 x 24 x 45							
		451600	Ake		2329002	[+] 23290 15.5							
2.4 i	10/96→12/06	97 / 132											
2.8 D	10/96→09/00	71 / 97											
2.8 D 4WD	10/96→03/03	71 / 97											
2.8 TD	04/03→06/06	92 / 125											
2.8 TD 4WD	04/03→06/06	92 / 125											
3.0	08/00→10/06	133 / 181											
3.0 4WD	10/96→10/06	133 / 181											
		451700	Sum		2308602	[+] 23086 16	⊖ ABS		Ake		91050500	ø 254 x 52	
2.5 TD (K64T)	08/01→11/05	66 / 90	Ake		2329002	[+] 23290 15.5	⊕ ABS				97015100		
			Ake		82032700						94016300	ø 254,0 x 62	
		451800	Sum		2308602	[+] 23086 16			Ake		91050600	ø 270 x 53	
2.5 TD 4WD	07/97→12/03	64 / 87											
2.5 TD 4WD (K74T)	06/96→12/07	73 / 99	Ake		2329002	[+] 23290 15.5					97031400		
2.5 TD 4WD (K74T)	08/01→12/07	98 / 133											
2.5 TD 4WD (K74T)	09/01→12/07	85 / 115	Sum		2387902	[+] 23879 15.5							
			Ake		82032700								
					92079800	ø 276 x 24 x 45							
				PRO	92079803	ø 276 x 24 x 45							
		451900							Ake		91050600	ø 270 x 53	
2.8 D 4WD	09/96→07/03	103 / 140									97031400		
L 200 (KB_T, KA_T) 01/04→													
		452000	Tok		2452901	[+] 24529 16					91073000	ø 300 x 51	
2.4 4WD	09/09→12/12	94 / 128											
2.4 CNG	04/10→	94 / 128	Tok		82516200						94035300	ø 295,0 x 73.2	
2.4 FWD	09/09→12/10	94 / 128											
2.4 i	11/05→	94 / 128											
2.4 i	03/07→	97 / 132		PRO	92180203	ø 294 x 28 x 46.5							
2.5 DI-D	04/10→	103 / 140											
2.5 DiD (KA4T)	11/05→	100 / 136											
2.5 DI-D (KA4T)	04/10→	94 / 128											

		kW / hp											
L 200 (KB_T, KA_T) 01/04→													
2.5 DI-D 4WD	04/10→	104 / 141	452100	Tok		**2452901**	[+] 24529 16				**91073000**	ø 300 x 51	
2.5 DI-D 4WD (KA4TXCN)	04/10→	103 / 140											
2.5 DI-D 4WD (KB4T)	11/05→	100 / 136											
2.5 DI-D 4WD (KB4T)	10/07→	123 / 167		Tok		**82516200**					**94035300**	ø 295,0 x 73.2	
2.5 DI-D 4WD (KB4T)	04/10→	131 / 178			PRO	**92180203**	ø 294 x 28 x 46.5						
2.5 DI-D 4x4	01/04→	89 / 121											
2.5 FWD	09/09→12/10	100 / 136											
3.2 DI-D 4WD	07/06→	118 / 160											
3.2 DI-D 4WD	05/07→	121 / 165											
3.2 DI-D 4WD	01/12→11/13	125 / 170											
3.5 4WD	05/07→	147 / 200											
3.5 Flex 4WD	09/09→	147 / 200											
3.5 i	07/06→12/09	135 / 184											
3.5 i 4WD	07/06→12/09	135 / 184											
2.5 DI-D	08/07→	123 / 167	452100								**94035300**	ø 295,0 x 73.2	10/11→
L 300 Box (P0_W, P1_W) 11/86→09/03													
2.0 (P03V, P13V)	11/86→	64 / 87	452200	Sum		**2137301**	[+] 21373 16.5		Ake		**91035200**	ø 254 x 52	Akebono
2.5 D (P05V, P05W, P15V)	11/86→02/06	51 / 69				**92047400**	ø 255 x 20 x 33.5		Sum		**91040300**	ø 254 x 52	Sumitomo
						92112400	ø 258 x 22 x 33.5				**97007400**		Akebono
2.0 (P23W, P23V)	11/03→02/06	83 / 112	452300	Sum		**2137301**	[+] 21373 16.5						
2.4 i	09/94→02/06	97 / 131											
2.4 i	03/06→	84 / 114				**92112400**	ø 258 x 22 x 33.5						
2.5 D	09/91→09/03	55 / 75	452400	Sum		**2137301**	[+] 21373 16.5						
						92074600	ø 277 x 22 x 45						
L 300 Bus (P0_W, P1_W, P2_W) 11/86→05/04													
1.6 (P02V, P12V)	11/86→	51 / 69	452500	Sum		**2137301**	[+] 21373 16.5		Ake		**91035200**	ø 254 x 52	Akebono
2.0 (P13T, P03W, P03V, P13V)	11/86→	66 / 90				**92047400**	ø 255 x 20 x 33.5		Sum		**91040300**	ø 254 x 52	Sumitomo
2.0 (P13V, P03W, P13T)	11/86→	64 / 87											
2.0 i (P13V, P00W, P03V, P03W, P13T)	07/96→	83 / 113				**92112400**	ø 258 x 22 x 33.5				**97007400**		Akebono
2.4 (P04W, P14V, P04V)	11/90→	82 / 112											
2.5 D (P25V, P05W, P05V, P15V, P15T)	11/86→	51 / 69											
2.0 4WD (P13V, P23V, P23W, P03V, P13T)	12/86→	65 / 88	452600	Sum		**2137301**	[+] 21373 16.5		Ake		**91035200**	ø 254 x 52	Akebono
2.0 4WD (P13V, P23W, P03V, P13T)	11/86→	66 / 90				**92074600**	ø 277 x 22 x 45		Sum		**91040300**	ø 254 x 52	Sumitomo
2.4 4WD (P24W, P24V)	11/90→	82 / 112									**97007400**		Akebono
2.5 TD 4WD (P25W, P25V)	11/88→	64 / 87											
2.4 i	09/94→05/04	97 / 132	452700	Sum		**2137301**	[+] 21373 16.5						
2.5 D (P05W, P05V, P15T)	09/91→09/03	55 / 75				**92112400**	ø 258 x 22 x 33.5						
2.4 i 4WD	09/94→02/01	97 / 132	452800	Sum		**2137301**	[+] 21373 16.5						
						92074600	ø 277 x 22 x 45						
3.0	06/94→05/03	136 / 185	452900	Sum		**2137301**	[+] 21373 16.5						
3.0 4WD	10/00→05/03	136 / 185											
L 300 Kasten (P0_W, P1_W) 11/86→09/03 → L 300 Box (P0_W, P1_W), Page 726													
L 300 Platform/Chassis (P1_T) 07/94→04/00													
2.0 (P13T)	07/94→04/00	85 / 116	453000	Sum		**2137301**	[+] 21373 16.5	→12/95			**91050700**	ø 270 x 53	
2.5 TD (P15T)	11/94→04/00	64 / 87		Ake		**2329002**	[+] 23290 15.5	01/96→					
				Ake		**82032700**		01/96→					
						92102500	ø 254 x 23.9 x 39						
L 300 Pritsche/Fahrgestell (P1_T) 07/94→04/00 → L 300 Platform/Chassis (P1_T), Page 726													
L 300 STARWAGON Bus (P0_W, P1_W, P2_W, SD, SE, SF, SG, SH, S 11/86→05/04 → L 300 Bus (P0_W, P1_W, P2_W), Page 726													
L 400 / SPACE GEAR Bus (PD_W, PC_W, PA_V, PB_V) 05/95→06/05													
2.0	09/95→10/02	83 / 113	453100	Ake		**2136301**	[+] 21363 15.7		Ake		**91050600**	ø 270 x 53	
2.4	05/95→10/02	97 / 132		Ake		**2329002**	[+] 23290 15.5	optional			**97031400**		
				Ake		**82032700**							
2.0 16V (PA3V/W, PB3V)	05/95→05/00	85 / 115	453200	Ake		**2136301**	[+] 21363 15.7		Ake		**2184002**	[+] 21840 14	⊕ rear disc brake
2.5 TD (PA5V/W, PB5V)	05/95→05/00	73 / 99											

		kW / hp										
L 400 / SPACE GEAR Bus (PD_W, PC_W, PA_V, PB_V) 05/95→06/05												
		453200	Ake		2329002	[+] 23290 15.5		Ake		82057300		
2.0 16V (PA3V/W, PB3V)	05/95→05/00	85 / 115										
2.5 TD (PA5V/W, PB5V)	05/95→05/00	73 / 99	Ake		82032700			Ake		91050500	ø 254 x 52	⊕ rear drum brake
					92102500	ø 254 x 23.9 x 39				97015100		⊕ rear drum brake
					92110600	ø 276 x 24 x 39				92093100	ø 315 x 18 x 84.2	⊕ rear disc brake
		453300	Ake		2136301	[+] 21363 15.7	⊖ spec.purp.veh.	Ake		2184002	[+] 21840 14	
2.4 i 4WD (PD4V/W)	05/95→05/00	97 / 132										
2.5 TD 4WD (PD5V/W)	05/95→05/00	73 / 99	Ake		2329002	[+] 23290 15.5	⊖ spec.purp.veh.	Ake		82057300		
			Ake		82032700					92093100	ø 315 x 18 x 84.2	
					92112900	ø 276 x 24 x 45.2						
		453400	Ake		2136301	[+] 21363 15.7		Ake		2184002	[+] 21840 14	
2500 TD	05/95→06/05	64 / 87	Ake		2329002	[+] 23290 15.5	optional	Ake		91050600	ø 270 x 53	
			Ake		82032700					97031400		
L 400 Box (PD_W, PC_W, PB_V, PA_W, PA_V) 06/96→06/05												
		453500	Ake		2136301	[+] 21363 15.7		Ake		91050600	ø 270 x 53	
1.6	06/96→10/02	51 / 69										
2.0	06/96→03/01	85 / 116	Ake		2329002	[+] 23290 15.5	optional			97031400		
2.0	06/96→10/02	83 / 113										
2.4	06/96→10/02	97 / 132										
2500 TD 4WD (PD5W, PD5V, PA5W, PA5V)	09/96→06/05	64 / 87	Ake		82032700							
		453600	Ake		2136301	[+] 21363 15.7		Ake		2184002	[+] 21840 14	
2500 TD (PD5W, PD5V, PA5W, PA5V)	09/96→06/05	64 / 87										
			Ake		2329002	[+] 23290 15.5	optional	Ake		91050600	ø 270 x 53	
			Ake		82032700					97031400		
L 400 Kasten (PD_W, PC_W, PB_V, PA_W, PA_V) 06/96→06/05												
→ L 400 Box (PD_W, PC_W, PB_V, PA_W, PA_V), Page 727												
LANCER V Break (CB_W, CD_W) 09/92→10/03												
→ LANCER V Station Wagon (CB_W, CD_W), Page 727												
LANCER V Station Wagon (CB_W, CD_W) 09/92→10/03												
		453700	Sum		2165001	[+] 21650 15		Ake		2187202	[+] 21872 14.5	⊕ rear disc brake
1.6 16V (CB4W)	12/92→10/03	83 / 113	Sum		82031200					82511600		⊕ rear disc brake
					92089400	ø 236 x 18 x 45		Ake		91047100	ø 203.2 x 37	⊕ rear drum brake
										92128600	ø 236 x 10 x 41	⊕ rear disc brake ⊕ ABS
										94026100	ø 203 x 42	→12/99
		453800	Sum		2164701	[+] 21647 16				91047500	ø 228.6 x 42	⊕ rear drum brake
1.6 16V 4WD (CD4W)	12/92→10/03	83 / 113	Sum		82031200							
					92082900	ø 256 x 24 x 45.5						
					92103900	ø 256 x 24 x 45						
		453900	Sum		2164701	[+] 21647 16	solid disc	Ake		2187202	[+] 21872 14.5	
1.8 i	03/95→10/03	88 / 120										
1.8 i (CB5)	09/92→10/03	86 / 117	Sum		2165001	[+] 21650 15	vented disc					
		454000	Sum		2165001	[+] 21650 15		Ake		2187202	[+] 21872 14.5	⊕ rear disc brake
2.0 D (CB8W)	12/92→10/03	50 / 68	Sum		82031200					82511600		⊕ rear disc brake
					92089400	ø 236 x 18 x 45		Ake		91047100	ø 203.2 x 37	⊕ rear drum brake
										92128600	ø 236 x 10 x 41	⊕ rear disc brake ⊕ ABS
										94026100	ø 203 x 42	→08/98
LANCER VI (CJ-CP_) 09/95→08/03												
		454100	Sum		2165001	[+] 21650 15				91045801	ø 180 x 37	
1.3 12V (CK1A)	12/95→08/03	55 / 75										
1.5 (CK2A)	07/96→09/99	69 / 94	Sum		82031200					94025900	ø 180 x 46	
1.5 16V (CK2A)	12/95→08/03	69 / 94										
1.6 16V (CK4A)	12/95→08/03	66 / 90										

		kW / hp											
LANCER VI (CJ-CP_) 09/95→08/03													
		454100											
1.3 12V (CK1A)	12/95→08/03	55 / 75											
1.5 (CK2A)	07/96→09/99	69 / 94											
1.5 16V (CK2A)	12/95→08/03	69 / 94											
1.6 16V (CK4A)	12/95→08/03	66 / 90											
		454200	Sum		2429101	[–] 24291 16	06/02→ →06/03		Ake		2337301	[+] 23373 15	05/01→
1.8 16V	09/95→08/03	151 / 205	Ake		2136301	[+] 21363 15.7	05/01→		Ake		82031400		05/01→
			Ake		82032700		05/01→				92134700	ø 284 x 20 x 60	
					92089400	ø 236 x 18 x 45							
		454300	Bre		2309204	[+] 23092 15			Bre		2158001	[+] 21580 14.3	
2.0 16V EVO	08/98→08/01	206 / 280		PRO	92169903	ø 320 x 32 x 43.5				PRO	92170603	ø 300 x 22 x 58	
											91063000	ø 167 x 32	
LANCER VI Saloon (CJ-CP_) 09/95→08/03 → LANCER VI (CJ-CP_), Page 727													
LANCER VI Stufenheck (CJ-CP_) 09/95→08/03 → LANCER VI (CJ-CP_), Page 727													
LANCER Cabriolet (CE) 07/96→01/03 → LANCER Convertible (CE), Page 728													
LANCER Convertible (CE) 07/96→01/03													
		454400	Sum		2164701	[+] 21647 16							
1.8 i	07/96→01/03	86 / 117											
LANCER Coupe (CE) 07/96→09/04													
		454500	Sum		2165001	[+] 21650 15							
1.5 16V	07/96→09/04	63 / 86											
		454600	Sum		2164701	[+] 21647 16							
1.8 i	07/96→09/04	86 / 117											
LANCER Estate (CS_W) 09/03→10/08													
		454700	Ake		2358401	[+] 23584 16			Ake		2401401	[+] 24014 15.4	
1.6	09/03→10/08	72 / 98											
2.0	09/03→12/07	99 / 135	Ake		82507300				Ake		82501800		
					92148700	ø 276 x 26 x 45.5	⊕ rim 4 hole				92104000	ø 262 x 10 x 61.6	⊕ rim 4 hole
				PRO	92198203	ø 276 x 26 x 45.5	⊕ rim 5 hole				92136100	ø 262 x 10 x 60.1	⊕ rim size 5"
										PRO	92136103	ø 262 x 10 x 60.1	⊕ rim size 5"
											91063000	ø 167 x 32	
		454800	Sum		2429101	[–] 24291 16			Ake		2401401	[+] 24014 15.4	
2.0	08/05→10/08	92 / 125									92136100	ø 262 x 10 x 60.1	
LANCER EX SPORTBACK (CX_A) 10/07→ → LANCER SPORTBACK (CX_A), Page 729													
LANCER EX Stufenheck (CY/Z_A) 03/07→ → LANCER Saloon (CY/Z_A), Page 729													
LANCER FORTIS Stufenheck (CY/Z_A) 03/07→ → LANCER Saloon (CY/Z_A), Page 729													
LANCER Kombi (CS_W) 09/03→10/08 → LANCER Estate (CS_W), Page 728													
LANCER Mk V Estate (CB_W, CD_W) 09/92→10/03 → LANCER V Station Wagon (CB_W, CD_W), Page 727													
LANCER Mk V Station Wagon (CB_W, CD_W) 09/92→10/03 → LANCER V Station Wagon (CB_W, CD_W), Page 727													
LANCER Mk VI (CJ-CP_) 09/95→08/03 → LANCER VI (CJ-CP_), Page 727													
LANCER Saloon (CS_A, CT0) 09/03→													
		454900	Ake		2358401	[+] 23584 16			Ake		2401401	[+] 24014 15.4	
1.3	09/03→	60 / 82											
1.6 (CS3A)	09/03→	72 / 98	Ake		82507300				Ake		82501800		
2.0	09/03→	85 / 116											
2.0 (CS9A)	12/03→	99 / 135			92148700	ø 276 x 26 x 45.5	⊕ rim 4 hole				92104000	ø 262 x 10 x 61.6	⊕ rim 4 hole
				PRO	92198203	ø 276 x 26 x 45.5	⊕ rim 5 hole				92136100	ø 262 x 10 x 60.1	⊕ rim 5 hole
										PRO	92136103	ø 262 x 10 x 60.1	⊕ rim 5 hole
											91063000	ø 167 x 32	
		455000	Sum		2429101	[–] 24291 16			Ake		2401401	[+] 24014 15.4	
2.0	08/05→	92 / 125											
2.0 GDi	09/03→	92 / 125									92136100	ø 262 x 10 x 60.1	
2.4 iVRX	08/05→	115 / 156											
		455100	Bre		2309203	[–] 23092 16			Ake		2401401	[+] 24014 15.4	
2.0 16V EVO IX (CT9A)	01/06→	206 / 280											

		kW / hp												
LANCER Saloon (CS_A, CT0) 09/03→														
2.0 4WD	08/05→	213 / 290	Bre		2309204	[+] 23092 15			Ake		82501800		
											91063000	ø 167 x 32	
		455200	Bre		2309204	[+] 23092 15			Bre		2158001	[+] 21580 14.3	
2.0 16V EVO VIII (CT9A)	03/04→	195 / 265							Ake		82501800		
											91063000	ø 167 x 32	
		455300	Sum		2429101	[–] 24291 16							
2.0 i	10/07→	113 / 154											
LANCER Saloon (CY/Z_A) 03/07→														
		455400	Ake		2358401	[+] 23584 16			Ake		2401401	[+] 24014 15.4	
1.5	06/08→	80 / 109											
1.5 Bifuel	02/10→	80 / 109											
1.6	05/10→	86 / 117	Ake		82507300				Ake		82501800		
1.8	02/08→	105 / 143											
1.8	05/10→	103 / 140		PRO	92197403	ø 276 x 26 x 46					92227400	ø 262 x 10 x 60	
1.8 Bifuel	02/10→	105 / 143								PRO	92227403	ø 262 x 10 x 60	
1.8 DI-D	05/10→	85 / 116											
1.8 DI-D (CY9A)	06/10→	110 / 150											
1.8 Flex	03/09→	103 / 140											
2.0	04/08→	115 / 155											
2.0	01/09→	108 / 147											
2.0	01/13→	110 / 150											
2.0 DI-D	01/08→	103 / 140											
2.0 i	01/09→	113 / 154											
2.0 i	10/09→	118 / 160											
2.0 i 4WD	03/07→	113 / 154											
2.4 i	10/08→	125 / 170											
		455500							Bre		2309204	[+] 23092 15	
2.0 EVO	06/08→	221 / 301							Bre		2482701	[+] 24827 14.1	
											92223700	ø 330 x 22 x 58.3	
											91068300	ø 190 x 32	
		455600	Bre		2309204	[+] 23092 15			Bre		2482701	[+] 24827 14.1	
2.0 EVO (CZ4A)	06/08→	217 / 295									92223700	ø 330 x 22 x 58.3	
											91068300	ø 190 x 32	
		455700	Ake		2136301	[+] 21363 15.7	⊖ EU →09/11		Ake		2358202	[+] 23582 15.5	
2.0 i Ralliart 4WD (CY4A)	10/08→	177 / 241	Ake		2137001	[+] 21370 15.7	⊕ EU →09/11		Ake		2401401	[+] 24014 15.4	10/11→
			Ake		2358401	[+] 23584 16	10/11→		Ake		82501800		
			Ake		82507300						92167000	ø 302 x 10 x 58.6	→09/11
				PRO	92135203	ø 294 x 24 x 45.6	→09/11				92227400	ø 262 x 10 x 60	10/11→
				PRO	92197403	ø 276 x 26 x 46	10/11→			PRO	92167003	ø 302 x 10 x 58.6	→09/11
										PRO	92227403	ø 262 x 10 x 60	10/11→
LANCER SERIE R SPORTBACK (CX_A) 10/07→ → LANCER SPORTBACK (CX_A), Page 729														
LANCER SERIE R Stufenheck (CY/Z_A) 03/07→ → LANCER Saloon (CY/Z_A), Page 729														
LANCER SPORTBACK (CX_A) 10/07→														
		455800	Ake		2358401	[+] 23584 16			Ake		2401401	[+] 24014 15.4	
1.5	06/08→	80 / 109											
1.5 Bifuel	03/10→	80 / 109											
1.6	05/10→	86 / 117	Ake		82507300				Ake		82501800		
1.8	03/09→	103 / 140											
1.8 (CX3A)	06/08→	105 / 143		PRO	92197403	ø 276 x 26 x 46					92227400	ø 262 x 10 x 60	
1.8 Bifuel	02/10→	105 / 143								PRO	92227403	ø 262 x 10 x 60	
1.8 DI-D	05/10→	85 / 116											
1.8 DI-D (CX9A)	06/10→	110 / 150											
2.0 DI-D	06/08→	103 / 140											
		455900	Ake		82032700				Ake		2358202	[+] 23582 15.5	
2.0 i	10/07→	113 / 154		PRO	92135203	ø 294 x 24 x 45.6			Ake		82501800		
											92167000	ø 302 x 10 x 58.6	
										PRO	92167003	ø 302 x 10 x 58.6	
											91068300	ø 190 x 32	
		456000	Ake		2136301	[+] 21363 15.7			Ake		2358202	[+] 23582 15.5	
2.0 Ralliart (CX4A)	10/08→	177 / 241											

		kW / hp										
LANCER SPORTBACK (CX_A) 10/07→												
2.0 Ralliart (CX4A)	10/08→	456000 177 / 241		PRO 92135203	ø 294 x 24 x 45.6			92167000	ø 302 x 10 x 58.6	
								PRO 92167003	ø 302 x 10 x 58.6	
								91068300	ø 190 x 32	
2.4 i	10/08→	456100 125 / 170	Ake	2358403	[+] 23584 16					
LANCER Stufenheck (CS_A, CT0) 09/03→ → LANCER Saloon (CS_A, CT0), Page 728										
LANCER Stufenheck (CY/Z_A) 03/07→ → LANCER Saloon (CY/Z_A), Page 729										
LEGNUM VI Kombi (EA_) 09/96→10/03 → GALANT VI Estate (EA_), Page 723										
LIBERO V Estate (CB_W, CD_W, CC, CE) 09/92→10/03 → LANCER V Station Wagon (CB_W, CD_W), Page 727										
LIBERO V Station Wagon (CB_W, CD_W, CC, CE) 09/92→10/03 → LANCER V Station Wagon (CB_W, CD_W), Page 727										
LIBERO V Station Wagon (CB_W, CD_W) 09/92→10/03 → LANCER V Station Wagon (CB_W, CD_W), Page 727										
MAGNA Estate (TH) 03/99→08/00										
3.5	03/99→08/00	456200 147 / 200	Ake	2136301	[+] 21363 15.7	⊕ ABS	Luc	2323701	[–] 23237 14.5	
				92110700	ø 276 x 24 x 45		Ake	2170602	[+] 21706 15.5	
							Ake	2337301	[+] 23373 15	Akebono
MAGNA Estate (TJ) 08/00→05/03										
3.5 i	08/00→05/03	456300 155 / 211	Ake	2136301	[+] 21363 15.7	⊕ ABS	Luc	2323701	[–] 23237 14.5	
3.5 i Sport	08/00→05/03	163 / 222		92110700	ø 276 x 24 x 45		Ake	2170602	[+] 21706 15.5	
							Ake	2337301	[+] 23373 15	Akebono
3.5 i 4WD	08/00→05/03	456400 155 / 211	Ake	2136301	[+] 21363 15.7	⊕ ABS	Luc	2323701	[–] 23237 14.5	
							Ake	2170602	[+] 21706 15.5	
							Ake	2184002	[+] 21840 14	
							Ake	2337301	[+] 23373 15	Akebono
MAGNA Estate (TW, TL) 06/03→07/05										
3.5	06/03→07/05	456500 143 / 194	Ake	2136301	[+] 21363 15.7	⊕ ABS	Luc	2323701	[–] 23237 14.5	
				92110700	ø 276 x 24 x 45		Ake	2170602	[+] 21706 15.5	
							Ake	2337301	[+] 23373 15	Akebono
3.5 i	10/04→07/05	456600 157 / 214		92110700	ø 276 x 24 x 45		Luc	2323701	[–] 23237 14.5	
MAGNA Kombi (TH) 03/99→08/00 → MAGNA Estate (TH), Page 730										
MAGNA Kombi (TJ) 08/00→05/03 → MAGNA Estate (TJ), Page 730										
MAGNA Kombi (TW, TL) 06/03→07/05 → MAGNA Estate (TW, TL), Page 730										
MAGNA Saloon (TH) 03/99→08/00										
3.5 i	03/99→08/00	456700 147 / 200	Ake	2136301	[+] 21363 15.7	⊕ ABS	Luc	2323701	[–] 23237 14.5	
				92110700	ø 276 x 24 x 45		Ake	2170602	[+] 21706 15.5	
							Ake	2337301	[+] 23373 15	Akebono
MAGNA Saloon (TJ) 08/00→05/03										
3.0	08/00→05/03	456800 150 / 204	Ake	2136301	[+] 21363 15.7	⊕ ABS	Luc	2323701	[–] 23237 14.5	
3.5 i	08/00→05/03	155 / 211		92110700	ø 276 x 24 x 45		Ake	2170602	[+] 21706 15.5	
3.5 i Series II Raliant	08/02→05/03	180 / 245								
3.5 Series II Sports VR-X	08/02→05/03	163 / 222					Ake	2337301	[+] 23373 15	Akebono
3.5 i 4WD	08/00→05/03	456900 155 / 211	Ake	2136301	[+] 21363 15.7	⊕ ABS	Luc	2323701	[–] 23237 14.5	
							Ake	2170602	[+] 21706 15.5	
							Ake	2337301	[+] 23373 15	Akebono

		kW / hp												
MAGNA Saloon (TL, TW) 06/03→07/05														
		457000												
3.5	06/03→07/05	143 / 194			**92110700**	⌀ 276 x 24 x 45		Luc		**2323701**	[–] 23237	14.5		
		457100	Ake		**2136301**	[+] 21363	15.7 ⊕ ABS	Luc		**2323701**	[–] 23237	14.5		
3.5 i 4WD	06/03→07/05	159 / 216						Ake		**2170602**	[+] 21706	15.5		
								Ake		**2337301**	[+] 23373	15	Akebono	
MAGNA Stufenheck (TH) 03/99→08/00 → MAGNA Saloon (TH), Page 730														
MAGNA Stufenheck (TJ) 08/00→05/03 → MAGNA Saloon (TJ), Page 730														
MAGNA Stufenheck (TL, TW) 06/03→07/05 → MAGNA Saloon (TL, TW), Page 731														
MIRAGE V (CJ_, CP_) 11/95→09/03 → COLT V (CJ_, CP_), Page 720														
MIRAGE VI (Z3_A, Z2_A) 06/04→06/12 → COLT VI (Z3_A, Z2_A), Page 720														
MIRAGE Coupe 09/95→08/99														
		457200	Sum		**2165001**	[+] 21650	15			**91045801**	⌀ 180 x 37		⊖ ABS	
1.3	09/95→08/99	55 / 75	Sum		**82031200**			Ake		**91047100**	⌀ 203.2 x 37		⊕ ABS	
1.6 ZR	09/95→08/99	128 / 174			**92089400**	⌀ 236 x 18 x 45				**94025900**	⌀ 180 x 46		⊖ ABS	
										94026100	⌀ 203 x 42		⊕ ABS	
		457300	Sum		**2165001**	[+] 21650	15	Ake		**2187202**	[+] 21872	14.5	⊕ ABS	
1.5	09/95→08/99	81 / 110	Sum		**82031200**					**82511600**			⊕ ABS	
					92089400	⌀ 236 x 18 x 45		Ake		**91047100**	⌀ 203.2 x 37		⊖ ABS	
										92128600	⌀ 236 x 10 x 41		⊕ ABS	
										94026100	⌀ 203 x 42		⊖ ABS	
MIRAGE Hatchback (A0_A) 05/12→ → SPACE STAR Hatchback (A0_A), Page 739														
MIRAGE Hatchback 12/91→07/03														
		457400	Sum		**2165001**	[+] 21650	15			**91045801**	⌀ 180 x 37		⊖ ABS	
1.3	09/95→07/03	55 / 75	Sum		**82031200**			Ake		**91047100**	⌀ 203.2 x 37		⊕ ABS	
1.6 ZR	09/95→08/99	128 / 174			**92089400**	⌀ 236 x 18 x 45				**94025900**	⌀ 180 x 46		⊖ ABS	
										94026100	⌀ 203 x 42		⊕ ABS	
		457500	Sum		**2165001**	[+] 21650	15	Ake		**2187202**	[+] 21872	14.5	⊕ ABS	
1.5	09/95→08/99	81 / 110	Sum		**82031200**					**82511600**			⊕ ABS	
1.6	09/99→07/03	84 / 114			**92089400**	⌀ 236 x 18 x 45		Ake		**91047100**	⌀ 203.2 x 37		⊖ ABS	
										92128600	⌀ 236 x 10 x 41		⊕ ABS	
										94026100	⌀ 203 x 42		⊖ ABS	
		457600	Sum		**2164701**	[+] 21647	16	Ake		**2187202**	[+] 21872	14.5		
1.8 Gti	12/91→07/03	103 / 140			**92135000**	⌀ 256 x 24 x 45				**82511600**				
									PRO	**92171203**	⌀ 260 x 10 x 41			
MIRAGE Hatchback 09/95→07/03														
		457700	Sum		**2165001**	[+] 21650	15			**91045801**	⌀ 180 x 37		⊖ ABS	
1.3	09/95→07/03	55 / 75	Sum		**82031200**			Ake		**91047100**	⌀ 203.2 x 37		⊕ ABS	
1.6	09/95→08/99	128 / 174			**92089400**	⌀ 236 x 18 x 45				**94025900**	⌀ 180 x 46		⊖ ABS	
										94026100	⌀ 203 x 42		⊕ ABS	
		457800	Sum		**2165001**	[+] 21650	15	Ake		**2187202**	[+] 21872	14.5	⊕ ABS	
1.5	09/95→08/99	81 / 110	Sum		**82031200**					**82511600**			⊕ ABS	
1.6	09/99→07/03	84 / 114			**92089400**	⌀ 236 x 18 x 45		Ake		**91047100**	⌀ 203.2 x 37		⊖ ABS	
										92128600	⌀ 236 x 10 x 41		⊕ ABS	

		kW / hp											
MIRAGE Hatchback 09/95→07/03													
		457800											
1.5	09/95→08/99	81 / 110											
1.6	09/99→07/03	84 / 114											
		457900	Sum		**2164701**	[+] 21647 16		Ake		**2187202**	[+] 21872 14.5		
1.8	08/01→07/03	103 / 140			**92135000**	ø 256 x 24 x 45				**82511600**			
				PRO					PRO	**92171203**	ø 260 x 10 x 41		
MIRAGE Saloon 09/95→08/99													
		458000	Sum		**2165001**	[+] 21650 15		Ake		**2187202**	[+] 21872 14.5	⊕ ABS	
1.5	09/95→08/99	81 / 110	Sum		**82031200**					**82511600**		⊕ ABS	
					92089400	ø 236 x 18 x 45		Ake		**91047100**	ø 203.2 x 37	⊖ ABS	
										92128600	ø 236 x 10 x 41	⊕ ABS	
										94026100	ø 203 x 42	⊖ ABS	
MIRAGE Schrägheck (A0_A) 05/12→ → SPACE STAR Hatchback (A0_A), Page 739													
MIRAGE Schrägheck 12/91→07/03 → MIRAGE Hatchback, Page 731													
MIRAGE Schrägheck 09/95→07/03 → MIRAGE Hatchback, Page 731													
MIRAGE Stufenheck 09/95→08/99 → MIRAGE Saloon, Page 732													
MONTERO (V3_W, V2_W, V4_W) 12/90→10/99 → PAJERO II (V3_W, V2_W, V4_W), Page 734													
MONTERO (V3_W, V2_W, V4_W) 12/90→10/99 → PAJERO II (V3_W, V2_W, V4_W), Page 734													
MONTERO (V90, V80) 11/06→ → PAJERO IV Van (V90, V80), Page 736													
MONTERO II (V3_W, V2_W, V4_W) 12/90→10/99 → PAJERO II (V3_W, V2_W, V4_W), Page 734													
MONTERO III (V7_W, V6_W) 01/99→01/07 → PAJERO III (V7_W, V6_W), Page 735													
MONTERO III Canvas Top (V6_W, V7_W) 04/00→12/06 → PAJERO III Canvas Top (V6_W, V7_W), Page 735													
MONTERO III Todo terreno, abierta (V6_W, V7_W) 04/00→12/06 → PAJERO III Canvas Top (V6_W, V7_W), Page 735													
MONTERO IV (V8_W, V9_W) 02/07→ → PAJERO IV (V8_W, V9_W), Page 735													
MONTERO Canvas Top (V2_W, V4_W) 12/90→04/00 → PAJERO II Canvas Top (V2_W, V4_W), Page 735													
MONTERO CLASSIC (V2_W) 07/02→ → PAJERO CLASSIC (V2_W), Page 736													
MONTERO IO (H6_W, H7_W) 03/99→06/07 → PAJERO PININ (H6_W, H7_W), Page 736													
MONTERO SPORT (K90) 11/98→ → PAJERO SPORT (K90), Page 737													
MONTERO SPORT II (KG_, KH_) 07/08→ → PAJERO SPORT II (KG_, KH_), Page 737													
MONTERO Todo terreno, abierta (V2_W, V4_W) 12/90→04/00 → PAJERO II Canvas Top (V2_W, V4_W), Page 735													
NATIVA II (KG_, KH_) 07/08→ → PAJERO SPORT II (KG_, KH_), Page 737													
NIMBUS (N9_W, N8_W, UG) 10/98→12/04 → SPACE WAGON (N9_W, N8_W), Page 739													
NIMBUS (N9_W, N8_W) 10/98→12/04 → SPACE WAGON (N9_W, N8_W), Page 739													
OUTLANDER I (CU_W) 05/03→12/12													
		458100	Ake		**2358401**	[+] 23584 16		Ake		**2358202**	[+] 23582 15.5	→08/12	
2.0	09/10→12/12	108 / 147	Ake		**82507300**			Ake		**2568801**	[+] 25688 14.3	08/12→	
				PRO	**92257603**	ø 294 x 26 x 45.6		Ake		**82501800**		→08/12	
									PRO	**92255103**	ø 302 x 10 x 60.1	→08/12	
		458200	Ake		**2136301**	[+] 21363 15.7		Ake		**2401401**	[+] 24014 15.4		
2.0 (CU2W)	05/03→10/06	100 / 136											
2.0 4WD	05/03→10/06	177 / 241	Ake		**2137001**	[+] 21370 15.7	optional	Ake		**82501800**			
2.0 4WD (CU2W)	05/03→10/06	93 / 126											
2.0 4WD (CU2W)	05/03→10/06	100 / 136											
2.0 Turbo 4WD (CU2W)	04/04→10/06	148 / 201	Ake		**82032700**					**92136100**	ø 262 x 10 x 60.1		
2.4 4WD	05/03→10/06	102 / 139											
2.4 4WD (CU5W)	05/03→10/06	119 / 162											
2.4 4WD (CU5W)	11/03→10/06	118 / 160		PRO	**92135203**	ø 294 x 24 x 45.6			PRO	**92136103**	ø 262 x 10 x 60.1		
2.4 HDD Mivec (CU5W)	07/03→09/06	118 / 160								**91063000**	ø 167 x 32		
		458300	Ake		**2358401**	[+] 23584 16		Ake		**2568801**	[+] 25688 14.3		
2.0 4WD	09/12→	110 / 150	Ake		**82507300**								
				PRO	**92257603**	ø 294 x 26 x 45.6							

kW / hp												
OUTLANDER I (CU_W) 05/03→12/12												
		458400	Ake		82032700			Ake		2401401	[+] 24014 15.4	
2.4 4WD	10/05→12/06	121 / 165		PRO	92135203	ø 294 x 24 x 45.6		Ake		82501800		
2.4 GDI 4WD	01/05→12/06	121 / 165								92136100	ø 262 x 10 x 60.1	
									PRO	92136103	ø 262 x 10 x 60.1	
										91063000	ø 167 x 32	
		458500	Ake		2137001	[+] 21370 15.7		Ake		2401401	[+] 24014 15.4	
2.4 GDI	08/03→10/04	121 / 165	Ake		82032700			Ake		82501800		
				PRO	92135203	ø 294 x 24 x 45.6				92136100	ø 262 x 10 x 60.1	
									PRO	92136103	ø 262 x 10 x 60.1	
										91063000	ø 167 x 32	
OUTLANDER II (CW_W) 11/06→11/12												
		458600	Ake		2136301	[+] 21363 15.7		Ake		2358202	[+] 23582 15.5	
2.0	11/06→11/12	108 / 147										
2.0	06/09→11/12	118 / 160	Ake		2137001	[+] 21370 15.7	optional	Ake		82501800		
2.0 4WD	11/06→11/12	108 / 147										
2.0 DI-D	02/07→11/12	103 / 140	Ake		82032700					92167000	ø 302 x 10 x 58.6	
2.2 DI-D	11/06→11/12	130 / 177										
2.2 DI-D 4WD	11/06→11/12	130 / 177		PRO	92135203	ø 294 x 24 x 45.6			PRO	92167003	ø 302 x 10 x 58.6	
2.2 DI-D 4WD	08/07→11/12	115 / 156										
2.2 DI-D 4WD	09/10→11/12	103 / 140								91068300	ø 190 x 32	
2.4	11/06→11/12	125 / 170										
2.4 4WD	09/07→11/12	125 / 170										
2.4 Flex 4WD	09/07→11/12	125 / 170										
3.0 4WD	11/06→11/12	162 / 220										
3.0 4WD	10/09→11/12	177 / 241										
		458700	Ake		2136301	[+] 21363 15.7		Ake		2358202	[+] 23582 15.5	
3.0 FWD	11/06→11/12	162 / 220	Ake		2358401	[+] 23584 16		Ake		82501800		
			Ake		82032700					92167000	ø 302 x 10 x 58.6	
			Ake		82507300				PRO	92167003	ø 302 x 10 x 58.6	
				PRO	92135203	ø 294 x 24 x 45.6				91068300	ø 190 x 32	
				PRO	92257603	ø 294 x 26 x 45.6	16" -brake					
OUTLANDER II Van (CW_W) 12/06→11/12												
		458800	Ake		2136301	[+] 21363 15.7		Ake		2358202	[+] 23582 15.5	
2.0 DI-D	12/06→11/12	103 / 140	Ake		2137001	[+] 21370 15.7	optional	Ake		82501800		
2.2 DI-D 4WD	09/10→11/12	130 / 177	Ake		82032700					92167000	ø 302 x 10 x 58.6	
				PRO	92135203	ø 294 x 24 x 45.6			PRO	92167003	ø 302 x 10 x 58.6	
										91068300	ø 190 x 32	
OUTLANDER III (GG_W, GF_W) 08/12→												
		458900	Ake		2136301	[+] 21363 15.7	⊕ EU	Ake		2568801	[+] 25688 14.3	⊕ EU
2.0	08/12→	110 / 150										
2.0	10/12→	107 / 146	Ake		2137001	[+] 21370 15.7	⊖ EU					
2.0 4WD	08/12→	110 / 150										
2.0 4WD	10/12→	107 / 146	Ake		2358401	[+] 23584 16	⊕ EU 16" -brake					
			Ake		82032700							
			Ake		82507300		16" -brake					
				PRO	92135203	ø 294 x 24 x 45.6						
				PRO	92257603	ø 294 x 26 x 45.6	16" -brake					
		459000	Ake		2136301	[+] 21363 15.7	⊕ EU	Ake		2568801	[+] 25688 14.3	⊕ EU
2.0 Hybrid 4WD	12/12→	89 / 121										
2.2 Di-D	08/12→	110 / 150	Ake		2137001	[+] 21370 15.7	⊖ EU					
2.2 Di-D 4WD	08/12→	110 / 150										
			Ake		82032700							
				PRO	92135203	ø 294 x 24 x 45.6						

		kW / hp											
OUTLANDER III (GG_W, GF_W) 08/12→													
459100			Ake		2358401	[+] 23584 16	⊕ EU	Ake		2568801	[+] 25688 14.3	⊕ EU
2.4 4WD	10/12→	124 / 169	Ake		82507300							
				PRO	92257603	ø 294 x 26 x 45.6						
459200			Ake		2358401	[+] 23584 16		Ake		2568801	[+] 25688 14.3	
3.0 GT 4WD	09/13→	177 / 240	Ake		82507300							
OUTLANDER III Van (GF_W, GG_W) 04/13→													
459300			Ake		2136301	[+] 21363 15.7	⊕ EU	Ake		2568801	[+] 25688 14.3	⊕ EU
2.2 Di-D 4WD	04/13→	110 / 150	Ake		2137001	[+] 21370 15.7	⊖ EU					
			Ake		82032700							
				PRO	92135203	ø 294 x 24 x 45.6						
OUTLANDER III Van (GG_W, GF_W) 08/12→													
459400			Ake		2136301	[+] 21363 15.7	⊕ EU	Ake		2568801	[+] 25688 14.3	⊕ EU
2.2 Di-D 4WD	08/12→	110 / 150	Ake		2137001	[+] 21370 15.7	⊖ EU					
			Ake		82032700							
				PRO	92135203	ø 294 x 24 x 45.6						
OUTLANDER SPORT (GA_W_) 02/10→ → ASX (GA_W_), Page 715													
PAJERO/SHOGUN (V90, V80) 11/06→ → PAJERO IV Van (V90, V80), Page 736													
PAJERO/SHOGUN II (V3_W, V2_W, V4_W) 12/90→10/99 → PAJERO II (V3_W, V2_W, V4_W), Page 734													
PAJERO/SHOGUN II Canvas Top (V2_W, V4_W) 12/90→04/00 → PAJERO II Canvas Top (V2_W, V4_W), Page 735													
PAJERO/SHOGUN II Open Off-Road Vehicle (V2_W, V4_W) 12/90→04/00 → PAJERO II Canvas Top (V2_W, V4_W), Page 735													
PAJERO/SHOGUN III (V7_W, V6_W) 01/99→01/07 → PAJERO III (V7_W, V6_W), Page 735													
PAJERO/SHOGUN III Canvas Top (V6_W, V7_W) 04/00→12/06 → PAJERO III Canvas Top (V6_W, V7_W), Page 735													
PAJERO/SHOGUN III Open Off-Road Vehicle (V6_W, V7_W) 04/00→12/06 → PAJERO III Canvas Top (V6_W, V7_W), Page 735													
PAJERO/SHOGUN IV (V8_W, V9_W) 02/07→ → PAJERO IV (V8_W, V9_W), Page 735													
PAJERO/SHOGUN Canvas Top (V2_W, V4_W) 12/90→04/00 → PAJERO II Canvas Top (V2_W, V4_W), Page 735													
PAJERO/SHOGUN CLASSIC (V2_W) 07/02→ → PAJERO CLASSIC (V2_W), Page 736													
PAJERO/SHOGUN Mk II (V3_W, V2_W, V4_W) 12/90→10/99 → PAJERO II (V3_W, V2_W, V4_W), Page 734													
PAJERO/SHOGUN Mk III Canvas Top (V6_W, V7_W) 04/00→12/06 → PAJERO III Canvas Top (V6_W, V7_W), Page 735													
PAJERO/SHOGUN Mk III Open Off-Road Vehicle (V6_W, V7_W) 04/00→12/06 → PAJERO III Canvas Top (V6_W, V7_W), Page 735													
PAJERO/SHOGUN Open Off-Road Vehicle (V2_W, V4_W) 12/90→04/00 → PAJERO II Canvas Top (V2_W, V4_W), Page 735													
PAJERO II (V3_W, V2_W, V4_W) 12/90→10/99													
459500			Ake		2136301	[+] 21363 15.7		Ake		2184002	[+] 21840 14	⊕ rear disc brake →08/99
2.4 (V21W, V21C)	04/91→10/99	82 / 112	Ake		82032700			Ake		2358202	[+] 23582 15.5	09/99→
2.5 TD 4WD (V24C, V24W)	12/90→10/99	73 / 99			92079800	ø 276 x 24 x 45		Sum		2359301	[+] 23593 15	11/98→
2.8 TD (V46W)	06/94→10/99	92 / 125		PRO	92079803	ø 276 x 24 x 45		Ake		82031400		
3.0 V6 24V (V43W, V23W)	06/97→10/99	130 / 177						Ake		91035200	ø 254 x 52	⊕ rear drum brake
										97007400		⊕ rear drum brake
										92093100	ø 315 x 18 x 84.2	⊕ rear disc brake
										94016300	ø 254,0 x 62	⊕ rear drum brake
										91056900	ø 197 x 40	⊕ rear disc brake

		kW / hp									
PAJERO II (V3_W, V2_W, V4_W) 12/90→10/99											
		459500									
2.4 (V21W, V21C)	04/91→10/99	82 / 112							97012700		
2.5 TD 4WD (V24C, V24W)	12/90→10/99	73 / 99									
2.8 TD (V46W)	06/94→10/99	92 / 125									
3.0 V6 24V (V43W, V23W)	06/97→10/99	130 / 177									
		459600	Ake		2136301	[+] 21363 15.7		Ake	2184002	[+] 21840 14	
3.5 V6 24V (V25W, V45W)	06/94→10/99	153 / 208									
3.5 V6 24V (V45W, V25W)	07/97→10/99	143 / 194	Ake		82032700			Ake	82031400		
					92112800	ø 276 x 27 x 45.2			92093100	ø 315 x 18 x 84.2	
									91056900	ø 197 x 40	⊕ rear disc brake
									97012700		
PAJERO II Canvas Top (V2_W, V4_W) 12/90→04/00											
		459700	Ake		2136301	[+] 21363 15.7		Ake	2184002	[+] 21840 14	⊕ rear disc brake →08/99
1.8 GDI	06/98→04/00	96 / 131									
2.4 (V41W, V21W, V21C)	04/91→04/00	82 / 112	Ake		82032700			Ake	2358202	[+] 23582 15.5	09/99→
2.5 TD 4WD (V24C, V24W)	12/90→04/00	73 / 99						Sum	2359301	[+] 23593 15	11/98→
3.0 V6 24V (V23W, V23C)	06/94→04/00	133 / 181			92079800	ø 276 x 24 x 45					
				PRO	92079803	ø 276 x 24 x 45		Ake	82031400		
								Ake	91035200	ø 254 x 52	⊕ rear drum brake
									97007400		⊕ rear drum brake
									92093100	ø 315 x 18 x 84.2	⊕ rear disc brake
									94016300	ø 254,0 x 62	⊕ rear drum brake
									91056900	ø 197 x 40	⊕ rear disc brake
									97012700		
PAJERO III (V7_W, V6_W) 01/99→01/07											
		459800	Sum		2348801	[+] 23488 16		Ake	2358202	[+] 23582 15.5	
2.4	10/01→01/07	82 / 112									
2.5	09/01→01/07	98 / 133			92128800	ø 290 x 26 x 46.2		Ake	82501800		
2.5 TDi	04/00→12/06	73 / 99		PRO	92128803	ø 290 x 26 x 46.2			92135100	ø 300 x 22 x 72.3	
2.5 TDi	09/01→12/06	85 / 115							92135103	ø 300 x 22 x 72.3	
3.0 V6 24V	01/99→12/06	130 / 177							91066000	ø 199 x 34	
3.2 Di-D	04/00→10/01	121 / 165							97012700		
3.2 Di-D	04/00→12/06	118 / 160									
3.2 Di-D	04/00→01/07	129 / 175									
3.5	04/00→04/04	140 / 190									
3.5	04/00→01/07	149 / 203									
3.8	09/03→10/06	150 / 204									
3.8 GDi	03/03→01/07	184 / 250									
PAJERO III Canvas Top (V6_W, V7_W) 04/00→12/06											
		459900	Sum		2348801	[+] 23488 16		Ake	2358202	[+] 23582 15.5	
2.4	10/01→12/06	82 / 112									
2.5 TDi (V64W, V74W)	04/00→12/06	73 / 99			92128800	ø 290 x 26 x 46.2		Ake	82501800		
2.5 TDi (V64W, V74W)	09/01→12/06	85 / 115		PRO	92128803	ø 290 x 26 x 46.2			92135100	ø 300 x 22 x 72.3	
2.8 TD 4WD	05/00→07/02	92 / 125							92135103	ø 300 x 22 x 72.3	
3.0 (V73W)	10/01→12/06	125 / 170							91066000	ø 199 x 34	
3.2 DI-D (V68W, V78W)	04/00→12/06	121 / 165							97012700		
3.2 DI-D (V68W, V78W)	10/01→12/06	118 / 160									
3.5 GDi 4WD	10/01→12/06	125 / 170									
3.5 i	09/03→10/06	160 / 218									
3.5 i 4WD	05/00→04/04	140 / 190									
3.5 V6 GDI (V65W, V75W)	04/00→12/06	149 / 203									
3.8 i 4WD	09/03→10/06	149 / 203									
PAJERO IV (V8_W, V9_W) 02/07→											
		460000	Sum		82517500			Ake	2358202	[+] 23582 15.5	
3.0 4WD	02/07→	131 / 178									
					92167100	ø 290 x 26 x 46.2		Ake	82501800		
				PRO	92167103	ø 290 x 26 x 46.2			92135100	ø 300 x 22 x 72.3	
									92135103	ø 300 x 22 x 72.3	
									91066000	ø 199 x 34	
		460100	Sum		2348801	[+] 23488 16	SWB	Sum	2194701	[–] 21947 15	LWB
3.2 DI-D	01/10→	121 / 165									
3.2 TD 4WD	01/12→	149 / 203	Sum		82517500		SWB	Ake	2358202	[+] 23582 15.5	SWB
					92167100	ø 290 x 26 x 46.2	SWB	Ake	82501800		SWB

kW / hp

PAJERO IV (V8_W, V9_W) 02/07→

460100													
3.2 DI-D	01/10→	121 / 165			92167200	ø 332 x 28 x 56.2	LWB			92135100	ø 300 x 22 x 72.3	SWB
3.2 TD 4WD	01/12→	149 / 203		PRO	92167103	ø 290 x 26 x 46.2	SWB			92167300	ø 331 x 18 x 74.4	LWB
				PRO	92167203	ø 332 x 28 x 56.2	LWB		PRO	92135103	ø 300 x 22 x 72.3	SWB
									PRO	92167303	ø 331 x 18 x 74.4	LWB
										91066000	ø 199 x 34	SWB
460200			Sum		2348801	[+] 23488 16	SWB	Sum		2194701	[–] 21947 15	LWB
3.2 DI-D (V88W, V98W)	02/07→	118 / 160										
3.2 DI-D (V88W, V98W)	02/07→	125 / 170	Sum		2402401	[+] 24024 17.8	LWB	Ake		2358202	[+] 23582 15.5	SWB
3.2 TD 4WD (V98W, V88W)	01/09→	147 / 200										
3.8 i 4WD (V97W, V87W)	01/09→	175 / 238	Sum		82517500		SWB	Ake		82501800		SWB
3.8 V6	02/10→	182 / 248										
3.8 V6 (V87W, V97W)	02/07→	184 / 250			92167100	ø 290 x 26 x 46.2	SWB			92135100	ø 300 x 22 x 72.3	SWB
					92167200	ø 332 x 28 x 56.2	LWB			92167300	ø 331 x 18 x 74.4	LWB
				PRO	92167103	ø 290 x 26 x 46.2	SWB		PRO	92135103	ø 300 x 22 x 72.3	SWB
				PRO	92167203	ø 332 x 28 x 56.2	LWB		PRO	92167303	ø 331 x 18 x 74.4	LWB
										91066000	ø 199 x 34	

PAJERO IV Van (V90, V80) 11/06→

460300			Sum		2348801	[+] 23488 16	SWB	Sum		2194701	[–] 21947 15	LWB
3.2 DI-D	11/06→	118 / 160										
3.2 TD 4WD	01/10→	147 / 200	Sum		2402401	[+] 24024 17.8	LWB	Ake		2358202	[+] 23582 15.5	SWB
			Sum		82517500		SWB	Ake		82501800		SWB
					92167100	ø 290 x 26 x 46.2	SWB			92135100	ø 300 x 22 x 72.3	SWB
					92167200	ø 332 x 28 x 56.2	LWB			92167300	ø 331 x 18 x 74.4	LWB
				PRO	92167103	ø 290 x 26 x 46.2	SWB		PRO	92135103	ø 300 x 22 x 72.3	SWB
				PRO	92167203	ø 332 x 28 x 56.2	LWB		PRO	92167303	ø 331 x 18 x 74.4	LWB
										91066000	ø 199 x 34	

PAJERO CLASSIC (V2_W) 07/02→

460400			Ake		2136301	[+] 21363 15.7		Ake		2184002	[+] 21840 14	⊕ rear disc brake
2.5 TD	07/02→	85 / 115										
			Ake		82032700			Ake		82031400		
					92079800	ø 276 x 24 x 45		Ake		91035200	ø 254 x 52	⊕ rear drum brake
				PRO	92079803	ø 276 x 24 x 45				97007400		⊕ rear drum brake
										92093100	ø 315 x 18 x 84.2	⊕ rear disc brake
										94016300	ø 254,0 x 62	⊕ rear drum brake
										91056900	ø 197 x 40	⊕ rear disc brake
										97012700		

PAJERO DAKAR II (KG_, KH_) 07/08→ → PAJERO SPORT II (KG_, KH_), Page 737

PAJERO FULL IV (V8_W, V9_W) 02/07→ → PAJERO IV (V8_W, V9_W), Page 735

PAJERO IO (H6_W, H7_W, QA) 03/99→06/07 → PAJERO PININ (H6_W, H7_W), Page 736

PAJERO IO (H6_W, H7_W) 03/99→06/07 → PAJERO PININ (H6_W, H7_W), Page 736

PAJERO MINI (H5_A) 10/94→08/12

460500			Sum		2348701	[–] 23487 15.5		Ake		91076500	ø 228.6 x 32	
0.7	10/94→08/12	38 / 52										
0.7 4WD	10/94→08/12	47 / 64								94037400	ø 228,6 x 39.6	

PAJERO PININ (H6_W, H7_W) 03/99→06/07

460600			Sum		2348701	[–] 23487 15.5		Ake		2170602	[+] 21706 15.5	
1.6 4WD	03/99→09/01	75 / 102										
1.8 (H76W, H66W)	11/01→06/07	84 / 114	Sum		82060000					82032900		
1.8 GDI (H66W)	10/99→06/07	88 / 120										
2.0 GDI (H67W, H77W)	10/00→06/07	95 / 129			92148500	ø 285 x 22 x 38.6		Ake		91076500	ø 228.6 x 32	

		kW / hp										
PAJERO PININ (H6_W, H7_W) 03/99→06/07												
		460600										
1.6 4WD	03/99→09/01	75 / 102								92148600	ø 262 x 9.5 x 60.3	
1.8 (H76W, H66W)	11/01→06/07	84 / 114										
1.8 GDI (H66W)	10/99→06/07	88 / 120										
2.0 GDI (H67W, H77W)	10/00→06/07	95 / 129										
PAJERO PININ Van (H6_W, H7_W) 10/99→												
		460700	Sum		2348701	[–] 23487 15.5		Ake		2170602	[+] 21706 15.5	
1.8 GDI (H66W)	10/99→	88 / 120	Sum		82060000					82032900		
2.0 GDI (H67W, H77W)	10/00→	95 / 129			92148500	ø 285 x 22 x 38.6		Ake		91076500	ø 228.6 x 32	
										92148600	ø 262 x 9.5 x 60.3	
PAJERO SFX II (V3_W, V2_W, V4_W) 12/90→10/99 → PAJERO II (V3_W, V2_W, V4_W), Page 734												
PAJERO SPORT (K90) 11/98→												
		460800	Ake		2136301	[+] 21363 15.7		Sum		2359301	[+] 23593 15	
2.5 D	04/05→	105 / 143	Ake		82032700					92093100	ø 315 x 18 x 84.2	
2.5 TD	09/09→	110 / 150			92079800	ø 276 x 24 x 45	⊕ rim size 15"			91056900	ø 197 x 40	
					92144800	ø 314 x 24 x 45	⊕ rim size 16"			97012700		
				PRO	92079803	ø 276 x 24 x 45	⊕ rim size 15"					
				PRO	92144803	ø 314 x 24 x 45	⊕ rim size 16"					
		460900	Ake		2136301	[+] 21363 15.7		Sum		2359301	[+] 23593 15	
2.5 TD (K94W)	11/98→	73 / 99	Ake		82032700			Ake		82031400		
2.5 TD (K94W)	07/02→	85 / 115			92079800	ø 276 x 24 x 45	⊕ rim size 15"			92093100	ø 315 x 18 x 84.2	
2.5 TD (K94W)	08/03→	98 / 133			92144800	ø 314 x 24 x 45	⊕ rim size 16"			91056900	ø 197 x 40	
3.0 V6 (K96W)	11/98→	130 / 177		PRO	92079803	ø 276 x 24 x 45	⊕ rim size 15"			97012700		
3.0 V6 (K96W)	06/00→	125 / 170		PRO	92144803	ø 314 x 24 x 45	⊕ rim size 16"					
3.0 V6 (K96W)	03/03→	123 / 167										
		461000	Ake		2136301	[+] 21363 15.7		Sum		2359301	[+] 23593 15	
3.2 TDi	11/98→	121 / 165								92093100	ø 315 x 18 x 84.2	
PAJERO SPORT II (KG_, KH_) 07/08→												
		461100	Tok		2452901	[+] 24529 16				91056900	ø 197 x 40	
2.5 DI-D	07/08→	131 / 178	Tok		82516200							
2.5 DI-D 4WD	07/08→	131 / 178		PRO	92180203	ø 294 x 28 x 46.5						
2.5 TD	09/08→	98 / 133										
3.0 4WD	09/08→	162 / 220										
		461200	Tok		2452901	[+] 24529 16				91073000	ø 300 x 51	
3.2 DI-D 4WD	07/08→	118 / 160	Tok		82516200					94035300	ø 295,0 x 73.2	
3.5	01/10→	137 / 186		PRO	92180203	ø 294 x 28 x 46.5						
3.5 Flex	08/09→	147 / 200										
3.5 Flex 4WD	07/08→	147 / 200										
PAJERO SPORT VAN (K90) 12/99→01/08												
		461300	Ake		2136301	[+] 21363 15.7		Sum		2359301	[+] 23593 15	
2.5 TD	12/99→01/08	85 / 115	Ake		82032700			Ake		82031400		
3.0 V6	12/99→01/08	125 / 170			92079800	ø 276 x 24 x 45	⊕ rim size 15"			92093100	ø 315 x 18 x 84.2	
					92144800	ø 314 x 24 x 45	⊕ rim size 16"			91056900	ø 197 x 40	
				PRO	92079803	ø 276 x 24 x 45	⊕ rim size 15"			97012700		
				PRO	92144803	ø 314 x 24 x 45	⊕ rim size 16"					
PHEV III (GG_W, GF_W) 08/12→ → OUTLANDER III (GG_W, GF_W), Page 733												
PROUDIA/DIGNITY (S4_A, S3_A) 10/99→05/01												
		461400	Sum		2348801	[+] 23488 16		Ake		2337301	[+] 23373 15	
3.5	10/99→05/01	177 / 241										
4.5	10/99→05/01	206 / 280										
RVR (GA_W_) 02/10→ → ASX (GA_W_), Page 715												
RVR (N1_W, N2_W) 10/91→08/99 → SPACE RUNNER (N1_W, N2_W), Page 738												

		kW / hp										
SANTAMO 05/99→12/04												
		461500	Sum		2164701	[+] 21647 16		Ake		2170602	[+] 21706 15.5	⊕ ABS Akebono
2.0 16V	05/99→12/04	102 / 139										
2.0 16V 4WD	05/99→12/04	102 / 139	Sum		2172501	[+] 21725 17		Man		2360801	[+] 23608 15	⊕ ABS Mando
			Ake		82031100			Ake		82031100		
					92082900	ø 256 x 24 x 45.5	→11/00			91047500	ø 228.6 x 42	⊖ ABS
					92103900	ø 256 x 24 x 45	→11/00			92104000	ø 262 x 10 x 61.6	⊕ ABS
SHOGUN II (V3_W, V2_W, V4_W) 12/90→10/99 → PAJERO II (V3_W, V2_W, V4_W), Page 734												
SHOGUN II Canvas Top (V2_W, V4_W) 12/90→04/00 → PAJERO II Canvas Top (V2_W, V4_W), Page 735												
SHOGUN III (V7_W, V6_W) 01/99→01/07 → PAJERO III (V7_W, V6_W), Page 735												
SHOGUN III Canvas Top (V6_W, V7_W) 04/00→12/06 → PAJERO III Canvas Top (V6_W, V7_W), Page 735												
SHOGUN III Van (V60, V70) 04/00→												
		461600	Sum		2348801	[+] 23488 16		Ake		2358202	[+] 23582 15.5	
3.2 DI-D (V68W, V78W)	04/00→10/01	121 / 165										
3.2 DI-D (V68W, V78W)	10/01→	118 / 160										
3.5 V6 GDI (V65W, V75W)	04/00→	149 / 203			92128800	ø 290 x 26 x 46.2		Ake		82501800		
				PRO	92128803	ø 290 x 26 x 46.2				92135100	ø 300 x 22 x 72.3	
									PRO	92135103	ø 300 x 22 x 72.3	
										91066000	ø 199 x 34	
										97012700		
SHOGUN IV (V8_W, V9_W) 02/07→ → PAJERO IV (V8_W, V9_W), Page 735												
SHOGUN PININ (H6_W, H7_W) 03/99→06/07 → PAJERO PININ (H6_W, H7_W), Page 736												
SHOGUN SPORT VAN (K90) 12/99→01/08 → PAJERO SPORT VAN (K90), Page 737												
SPACE RUNNER (N1_W, N2_W) 10/91→08/99												
		461700	Sum		2164701	[+] 21647 16		Ake		2170602	[+] 21706 15.5	⊕ rear disc brake ⊕ ABS
1.8 (N11W)	10/91→08/99	90 / 122										
1.8 (N11W)	06/96→08/99	85 / 116	Ake		82031100			Ake		82031100		⊕ ABS
2.0 16V	06/97→08/99	98 / 133										
2.0 TD (N18W)	10/92→08/99	60 / 82			92082900	ø 256 x 24 x 45.5		Ake		91047100	ø 203.2 x 37	⊕ rear drum brake
					92103900	ø 256 x 24 x 45				97030400		
										92104000	ø 262 x 10 x 61.6	⊕ rear disc brake
										94030000	ø 203 x 42	
		461800	Sum		2164701	[+] 21647 16		Ake		2170602	[+] 21706 15.5	⊕ rear disc brake ⊕ ABS
1.8 4WD (N21W)	10/91→08/99	90 / 122										
1.8 4WD (N21W)	06/96→08/99	85 / 116	Ake		82031100			Ake		82031100		⊕ ABS
					92082900	ø 256 x 24 x 45.5				91047500	ø 228.6 x 42	⊕ rear drum brake
					92103900	ø 256 x 24 x 45				97030400		
										92104000	ø 262 x 10 x 61.6	⊕ rear disc brake
SPACE RUNNER (N6_W) 08/99→08/02												
		461900	Ake		2136301	[+] 21363 15.7		Ake		2170602	[+] 21706 15.5	
2.0	08/99→08/02	100 / 136										
2.4 GDI	08/99→08/02	110 / 150	Ake		82032700			Ake		82031100		
					92110700	ø 276 x 24 x 45	→04/00			92136100	ø 262 x 10 x 60.1	
				PRO	92198203	ø 276 x 26 x 45.5	05/00→		PRO	92136103	ø 262 x 10 x 60.1	
		462000	Ake		2358401	[+] 23584 16		Ake		2170602	[+] 21706 15.5	
2.0	05/00→08/02	98 / 133										
				PRO	92198203	ø 276 x 26 x 45.5		Ake		82031100		
										92136100	ø 262 x 10 x 60.1	
									PRO	92136103	ø 262 x 10 x 60.1	
		462100	Ake		2358401	[+] 23584 16		Ake		2170602	[+] 21706 15.5	
2.4 GDI	08/99→08/02	108 / 147										
					92110700	ø 276 x 24 x 45	→04/00	Ake		82031100		

		kW / hp											
SPACE RUNNER (N6_W) 08/99→08/02													
		462100											
2.4 GDI	08/99→08/02	108 / 147		PRO	92198203	ø 276 x 26 x 45.5	05/00→			92136100	ø 262 x 10 x 60.1	
				PRO					PRO	92136103	ø 262 x 10 x 60.1	
SPACE STAR (DG_A) 06/98→12/04													
		462200	Luc		2192001	[+] 21920 15.1		Luc		2354901	[+] 23549 16.8	⊕ ABS
1.3 16V (DG1A)	06/98→12/04	63 / 86	Luc		82058900			Luc		82058900		⊕ ABS
			Luc		82063500			Luc		82063300		⊕ ABS
					92082900	ø 256 x 24 x 45.5		Bos		91056400	ø 203.2 x 39	⊖ ABS
					92103900	ø 256 x 24 x 45		Bos		84056400	bore ø 19 ø 203.2 x 39	Bosch ⊕ rear drum brake
									PRO	92083003	ø 260 x 10 x 41	⊕ ABS
										94030100	ø 203,2 x 42	⊖ ABS
		462300	Luc		2192001	[+] 21920 15.1		Luc		2354901	[+] 23549 16.8	⊕ ABS
1.3 16V (DG1A)	12/98→12/04	61 / 83										
1.8 GDI (DG5A)	06/98→12/04	87 / 118										
1.8 MPI	10/02→12/04	82 / 112	Luc		82058900			Luc		82058900		⊕ ABS
			Luc		82063500			Luc		82063300		⊕ ABS
					92082900	ø 256 x 24 x 45.5		Bos		91056400	ø 203.2 x 39	⊖ ABS
					92103900	ø 256 x 24 x 45		Bos		84056400	bore ø 19 ø 203.2 x 39	
									PRO	92083003	ø 260 x 10 x 41	⊕ ABS
										94030100	ø 203,2 x 42	⊖ ABS
		462400	Luc		2192001	[+] 21920 15.1		Luc		2354901	[+] 23549 16.8	⊕ ABS
1.3 16V (DG1A)	09/00→12/04	60 / 82										
1.6	04/01→12/04	72 / 98										
1.6 16V (DG3A)	01/01→12/04	72 / 98	Luc		82058900			Luc		82058900		⊕ ABS
1.8 GDI (DG5A)	06/98→12/04	90 / 122										
1.9 DI-D	10/02→12/04	85 / 115	Luc		82063500			Luc		82063300		⊕ ABS
1.9 DI-D (DG4A)	02/01→12/04	75 / 102										
					92082900	ø 256 x 24 x 45.5		Bos		91056400	ø 203.2 x 39	⊖ ABS
					92103900	ø 256 x 24 x 45			PRO	92083003	ø 260 x 10 x 41	⊕ ABS
										94030100	ø 203,2 x 42	⊖ ABS
SPACE STAR Hatchback (A0_A) 05/12→													
		462500	Ake		2422901	[+] 24229 15.3						
1.0 (A05A)	05/12→	52 / 71										
1.2 (A03A)	05/12→	57 / 78										
1.2 (A03A)	10/12→	59 / 80										
SPACE STAR Schrägheck (A0_A) 05/12→ → SPACE STAR Hatchback (A0_A), Page 739													
SPACE WAGON (N9_, N8_) 05/00→05/03 → GRANDIS (N9_, N8_), Page 724													
SPACE WAGON (N9_W, N8_W) 10/98→12/04													
		462600	Ake		2136301	[+] 21363 15.7		Ake		2337301	[+] 23373 15	
2.0 GDI	10/98→12/04	98 / 133										
2.4 GDI	10/98→12/04	110 / 150	Ake		2137001	[+] 21370 15.7	optional	Ake		82057300		
2.4 GDI	09/00→12/04	108 / 147										
2.4 GDI 4WD	10/98→12/04	110 / 150										
2.4 GDI 4WD	09/00→12/04	108 / 147	Ake		82032700					92134700	ø 284 x 20 x 60	
					92110700	ø 276 x 24 x 45						
		462700	Sum		2164701	[+] 21647 16		Ake		2184002	[+] 21840 14	
2.4	11/98→04/04	96 / 131										
			Ake		82031100							
STRADA (K7_T, K6_T) 06/96→12/07 → L 200 (K7_T, K6_T), Page 725													
TOPPO (_H4_, _H3_, _H2_) 10/90→07/03													
		462800			2527101	[+] 25271 15.3						
0.7	10/90→07/03	37 / 50										
0.7	09/93→07/03	47 / 64										
0.7 4WD	10/90→07/03	37 / 50										
0.7 4WD	09/93→07/03	47 / 64										
1.1	09/93→07/03	57 / 78										
TRITON (KB_T, KA_T) 01/04→ → L 200 (KB_T, KA_T), Page 725													
TRITON Pickup (K7_T, K6_T, MK) 06/96→12/07 → L 200 (K7_T, K6_T), Page 725													
TRITON Pick-up (K7_T, K6_T, MK) 06/96→12/07 → L 200 (K7_T, K6_T), Page 725													
TRITON Pickup (KB_T, KA_T, ML, MN) 01/04→ → L 200 (KB_T, KA_T), Page 725													

MITSUBISHI

MITSUBISHI

		kW / hp											
TRITON Pick-up (KB_T, KA_T, ML, MN) 01/04→ → L 200 (KB_T, KA_T), Page 725													
VERADA Estate (KH) 03/99→08/00													
462900													
3.5 i	03/99→08/00	150 / 204		**92110700**	ø 276 x 24 x 45		Luc		**2323701**	[–] 23237	14.5	
							Ake		**2170602**	[+] 21706	15.5	
							Ake		**2337301**	[+] 23373	15	Akebono
VERADA Estate (KJ) 08/00→05/03													
463000			Ake	**2136301**	[+] 21363	15.7 ⊕ ABS	Luc		**2323701**	[–] 23237	14.5	
3.5 i 4WD	08/00→05/03	155 / 211		**92110700**	ø 276 x 24 x 45		Ake		**2170602**	[+] 21706	15.5	
							Ake		**2184002**	[+] 21840	14	
							Ake		**2337301**	[+] 23373	15	Akebono
VERADA Estate (KL) 06/03→10/04													
463100			Ake	**2136301**	[+] 21363	15.7 ⊕ ABS	Luc		**2323701**	[–] 23237	14.5	
3.5	06/03→10/04	155 / 211		**92110700**	ø 276 x 24 x 45		Ake		**2170602**	[+] 21706	15.5	
							Ake		**2184002**	[+] 21840	14	
							Ake		**2337301**	[+] 23373	15	Akebono
VERADA Kombi (KH) 03/99→08/00 → VERADA Estate (KH), Page 740													
VERADA Kombi (KJ) 08/00→05/03 → VERADA Estate (KJ), Page 740													
VERADA Kombi (KL) 06/03→10/04 → VERADA Estate (KL), Page 740													
VERADA Saloon (KJ) 08/00→05/03													
463200				**92110700**	ø 276 x 24 x 45		Luc		**2323701**	[–] 23237	14.5	
3.5 i	08/00→05/03	150 / 204					Ake		**2170602**	[+] 21706	15.5	
VERADA Saloon (KL) 06/03→10/04													
463300			Ake	**2136301**	[+] 21363	15.7	Luc		**2323701**	[–] 23237	14.5	
3.5	06/03→10/04	155 / 211										
3.5	06/03→10/04	163 / 222										
3.5 24V	06/03→10/04	169 / 230		**92110700**	ø 276 x 24 x 45							
463400			Ake	**2136301**	[+] 21363	15.7 ⊕ ABS	Luc		**2323701**	[–] 23237	14.5	
3.5 4WD	06/03→10/04	154 / 209		**92110700**	ø 276 x 24 x 45		Ake		**2170602**	[+] 21706	15.5	
							Ake		**2184002**	[+] 21840	14	
VERADA Saloon (KW) 10/04→07/05													
463500			Ake	**2136301**	[+] 21363	15.7 ⊕ ABS	Luc		**2323701**	[–] 23237	14.5	
3.5	10/04→07/05	155 / 211										
3.5 24V	10/04→05/05	157 / 213										
3.5 24V	10/04→07/05	169 / 230		**92110700**	ø 276 x 24 x 45		Ake		**2170602**	[+] 21706	15.5	
3.5 4WD	10/04→07/05	154 / 209					Ake		**2184002**	[+] 21840	14	
VERADA Stufenheck (KJ) 08/00→05/03 → VERADA Saloon (KJ), Page 740													
VERADA Stufenheck (KL) 06/03→10/04 → VERADA Saloon (KL), Page 740													
VERADA Stufenheck (KW) 10/04→07/05 → VERADA Saloon (KW), Page 740													

MORGAN

MORGAN

		kW / hp											
FOUR FOUR 08/91→													
463600			Lkh	**2008901**	[–] 20089	14.4			**91069400**	ø 228.6 x 45		
1.6 i	01/93→	81 / 110										
463700			Lkh	**2008901**	[–] 20089	14.4	ATE / Teves		**91069400**	ø 228.6 x 45		
1.6 i Kat	08/91→	77 / 105										
463800			Lkh	**2008901**	[–] 20089	14.4	Lockheed	Lkh	**91037500**	ø 228.6 x 45		
1.8 i	01/93→	92 / 125						Lkh	**97003900**			
PLUS EIGHT 08/90→													
463900								Lkh	**91037500**	ø 228.6 x 45		Lockheed
3.9	08/90→	138 / 188										
4.6	01/96→	164 / 223						Lkh	**97003900**			Lockheed

MORGAN

MORGAN

		kW / hp											
PLUS FOUR 08/92→													
		464000	Lkh		**2008901**	[–] 20089 14.4	Girling / Lucas	Lkh		**91037500**	ø 228.6 x 45	Lockheed
1.8 i	01/93→	96 / 130										
2.0 i	08/92→	99 / 135						Lkh		**97003900**		Lockheed

MULTICAR

MULTICAR

		kW / hp											
Fumo 09/01→													
		464100	Per		**2915301**	[o] 29153 20		Per		**2915301**	[o] 29153 20	
2,8	09/01→	78 / 105										
2,8	09/01→	78 / 105										
3,0	09/06→	107 / 146										
3,0	09/06→	75 / 122										
3,0	09/06→	75 / 122										
3,0	09/06→	107 / 146										
M26 01/96→													
		464200	Knott P 2.46 - brake		**2920801**	[+] 29208 17						
2,8	01/96→12/02	78 / 106										
2,8	01/96→12/02	78 / 106										
EcoLine, ProfiLine	01/03→	66 / 90										
EcoLine, ProfiLine	01/03→	66 / 90										
EcoLine, ProfiLine	09/06→	74 / 100										
EcoLine, ProfiLine	09/06→	74 / 100										
TransLine	01/03→	66 / 90										
TransLine	01/03→	66 / 90										
TransLine	09/06→	74 / 100										
TransLine	09/06→	74 / 100										
UX100 01/99→													
		464300	Per		**2915301**	[o] 29153 20						
UX100H, UX100M	01/99→	85 / 116										
UX100M	01/99→	85 / 116										

		kW / hp												
RIA 10/01→09/06														
		464400	Sum		2364901	[+] 23649	16.2							
2.5	10/01→09/06	100 / 136												
2.5	11/01→09/06	129 / 175												
SURIA 11/06→														
		464500	Man		2427501	[+] 24275	16.8							
1.1	11/06→	48 / 65												

		kW / hp												
200 SX (S14) 10/93→12/99														
		464600	Sum		2185401	[+] 21854	15		Ake		2112102	[+] 21121	14	
2.0	09/94→12/99	104 / 141												
2.0 i 16V	10/93→12/99	118 / 160												
2.0 i 16V Turbo	10/93→12/99	147 / 200	Sum		82052100									
2.0 Turbo	04/94→09/99	162 / 220												
200 SX (S15) 11/00→12/03														
		464700	Sum		2130701	[+] 21307	14.5		Ake		2112102	[+] 21121	14	
2.0 i 16V Turbo	11/00→12/03	147 / 200												
200 SX Coupe (S14) 10/93→12/99 → 200 SX (S14), Page 742														
350 Z (Z33) 09/02→														
		464800	Bre		2314201	[+] 23142	14.3		Bre		2158001	[+] 21580	14.3	
3.5	09/02→	221 / 301												
3.5	10/03→	206 / 280		PRO	92194203	ø 324 x 30 x 49			Ake		82507600			
3.5	11/04→01/07	214 / 291												
3.5	09/05→	230 / 313									91065900	ø 172 x 32		
350 Z Roadster (Z33) 09/03→12/05														
		464900		PRO	92194203	ø 324 x 30 x 49			Bre		2158001	[+] 21580	14.3	
3.5	09/03→12/05	214 / 291												
											91065900	ø 172 x 32		
		465000	Bre		2314201	[+] 23142	14.3		Bre		2158001	[+] 21580	14.3	
3.5	03/05→	206 / 280												
3.5	09/05→	230 / 313		PRO	92194203	ø 324 x 30 x 49			Ake		82507600			
3.5	04/06→	221 / 301												
											91065900	ø 172 x 32		
370 Z (Z34) 04/09→12/13														
		465100	Ake		2499401	[+] 24994	15.9		Ake		2492101	[+] 24921	13.5	
3.7	04/09→12/13	248 / 337												
		465200	Ake		2499401	[+] 24994	15.9		Ake		2499501	[+] 24995	13.8	
3.7	06/09→	241 / 328												
3.7	06/09→	243 / 330									91074600	ø 170 x 40		
											97037500			
		465300	Ake		2499401	[+] 24994	15.9		Ake		2499501	[+] 24995	13.8	
3.7	01/13→	245 / 333												
3.7 Nismo	04/09→	261 / 355												
3.7 Nismo	06/13→	253 / 344												
370 Z Roadster (Z34) 01/09→														
		465400	Ake		2499401	[+] 24994	15.9		Ake		2499501	[+] 24995	13.8	
3.7	01/09→12/12	248 / 337												
3.7	09/09→	247 / 336												
		465500	Ake		2499401	[+] 24994	15.9		Ake		2499501	[+] 24995	13.8	
3.7	01/10→	241 / 328												
3.7	01/10→	243 / 330									91074600	ø 170 x 40		
											97037500			
1400 BAKKIE (B140) 08/81→09/08														
		465600	Luc		2117004	[–] 21170	14.5							
1.4	08/81→12/06	49 / 67												
1.4	09/89→09/08	47 / 64												
ALMERA (N15) 07/95→07/00 → ALMERA I (N15), Page 742														
ALMERA (N15) 07/95→07/00 → ALMERA I (N15), Page 742														
ALMERA I (N15) 07/95→07/00														
		465700	Ake		2300401	[+] 23004	15.5	→12/97 ⊖ ABS	Ake		2171301	[+] 21713	16.4	01/98→ ⊕ ABS
1.4	09/95→07/00	64 / 87												
1.4 GX,LX	09/95→07/00	55 / 75	Ake		2300501	[+] 23005	15.5	01/98→ ⊕ ABS	Ake		2302301	[+] 23023	15	→12/97 ⊕ ABS
1.5	07/95→05/00	77 / 105												
1.6	07/95→03/00	75 / 102												
1.6	09/95→07/00	73 / 99	Sum		2350201	[+] 23502	16	→12/97 ⊕ ABS	Ake		82057200			12/97→ ⊕ ABS
1.6 SLX	09/95→07/00	66 / 90												
1.8	07/95→05/00	84 / 114	Ake		82519700			⊕ ABS			82057900			→01/98 ⊕ ABS
2.0 D	11/95→07/00	55 / 75												

N - P

		kW / hp											
ALMERA I (N15) 07/95→07/00													
		465700	Ake		82519800		⊖ ABS				91045300	ø 180 x 31	⊖ ABS
1.4	09/95→07/00	64 / 87											
1.4 GX,LX	09/95→07/00	55 / 75			92090900	ø 232 x 18 x 45.2	→12/97 ⊖ ABS				97008600		⊖ ABS
1.5	07/95→05/00	77 / 105											
1.6	07/95→03/00	75 / 102			92091000	ø 247 x 18 x 45.2	01/98→ ⊖ ABS				92079900	ø 257 x 9 x 44.6	01/98→ ⊕ ABS
1.6	09/95→07/00	73 / 99											
1.6 SLX	09/95→07/00	66 / 90			92148800	ø 252 x 20 x 45.1	⊕ ABS				92080000	ø 234 x 7 x 39.4	→12/97 ⊕ ABS
1.8	07/95→05/00	84 / 114											
2.0 D	11/95→07/00	55 / 75									94020900	ø 180,0 x 37.5	⊖ ABS
ALMERA I Hatchback (N15) 07/95→07/00													
		465800	Ake		2300401	[+] 23004 15.5	→12/97 ⊖ ABS	Ake		2171301	[+] 21713 16.4	01/98→ ⊕ ABS	
1.4	09/95→03/00	64 / 87											
1.4 S,GX,LX	09/95→03/00	55 / 75	Ake		2300501	[+] 23005 15.5	01/98→ ⊕ ABS	Ake		2302301	[+] 23023 15	→12/97 ⊕ ABS	
1.5	07/95→03/00	77 / 105											
1.6	07/95→03/00	75 / 102	Sum		2350201	[+] 23502 16	→12/97 ⊕ ABS	Ake		82057200		12/97→ ⊕ ABS	
1.6	09/95→03/00	73 / 99											
1.6	09/95→07/00	86 / 117	Ake		82519700		⊕ ABS			82057900		→01/98 ⊕ ABS	
1.6 SR,SLX	09/95→03/00	66 / 90											
2.0 D	11/95→03/00	55 / 75	Ake		82519800		⊖ ABS			91045300	ø 180 x 31	⊖ ABS	
					92090900	ø 232 x 18 x 45.2	→12/97 ⊖ ABS			97008600		⊖ ABS	
					92091000	ø 247 x 18 x 45.2	01/98→ ⊖ ABS			92079900	ø 257 x 9 x 44.6	01/98→ ⊕ ABS	
					92148800	ø 252 x 20 x 45.1	⊕ ABS			92080000	ø 234 x 7 x 39.4	→12/97 ⊕ ABS	
										94020900	ø 180,0 x 37.5	⊖ ABS	
		465900	Sum		2138603	[–] 21386 15		Ake		2171301	[+] 21713 16.4		
2.0 GTi	07/96→03/00	105 / 143	Sum		2138604	[+] 21386 15		Ake		82057200			
					82060900					92079900	ø 257 x 9 x 44.6		
					92096700	ø 257 x 26 x 46							
ALMERA II (N16) 06/00→													
		466000	Luc		2154601	[–] 21546 17.5	⊖ ABS	Luc		2154501	[–] 21545 15.6	⊕ rear disc brake	
1.5	07/00→	66 / 90	Luc		2346302	[–] 23463 16.6	⊕ ABS	Ake		2171301	[+] 21713 16.4	⊕ rear disc brake ⊕ J-made	
			Luc		82051700		⊖ ABS	Luc		82063100		⊕ rear disc brake	
			Luc		82059700		⊕ ABS			91064400	ø 203.2 x 36.5	⊖ ABS	
			Luc		82063500					97034200		⊖ ABS	
					92056300	ø 257 x 22 x 49	⊖ ABS			92056400	ø 258 x 10 x 45	⊕ rear disc brake	
					92109300	ø 280 x 22 x 49	⊕ ABS			94026900	ø 203,0 x 43.5	⊖ ABS ⊕ rear drum brake 09/00→ →03/05	
		466100	Luc		2154601	[–] 21546 17.5	⊖ ABS	Luc		2154501	[–] 21545 15.6	⊕ rear disc brake	
1.5	03/01→	77 / 105	Luc		2346302	[–] 23463 16.6	⊕ ABS	Ake		2171301	[+] 21713 16.4	⊕ rear disc brake ⊕ J-made	
			Luc		82051700		⊖ ABS	Luc		82063100		⊕ rear disc brake	
			Luc		82059700		⊕ ABS			91064400	ø 203.2 x 36.5	⊖ ABS	
			Luc		82063500					92056400	ø 258 x 10 x 45	⊕ rear disc brake	
					92056300	ø 257 x 22 x 49	⊖ ABS			94026900	ø 203,0 x 43.5	⊕ rear drum brake ⊖ ABS →03/05	
					92109300	ø 280 x 22 x 49	⊕ ABS						
		466200	Luc		2154601	[–] 21546 17.5	⊖ ABS	Luc		2154501	[–] 21545 15.6	⊕ rear disc brake	
1.5	10/02→	72 / 98	Luc		2346302	[–] 23463 16.6	⊕ ABS	Ake		2171301	[+] 21713 16.4	⊕ rear disc brake ⊕ J-made	
			Luc		82051700		⊖ ABS	Luc		82063100		⊕ rear disc brake	
			Luc		82059700		⊕ ABS			91064400	ø 203.2 x 36.5	⊖ ABS	
			Luc		82063500					97034200		⊖ ABS	
					92056300	ø 257 x 22 x 49	⊖ ABS			92056400	ø 258 x 10 x 45	⊕ rear disc brake	

N - P

		kW / hp											
ALMERA II (N16) 06/00→													
1.5	10/02→	466200 72 / 98		92109300	ø 280 x 22 x 49	⊕ ABS		94026900	ø 203,0 x 43.5	⊕ rear drum brake ⊖ ABS →03/05
1.5 dCi	01/03→	466300 60 / 82	Luc	2154601	[–] 21546 17.5	⊖ ABS	Luc	2154501	[–] 21545 15.6	⊕ rear disc brake
			Luc	2346302	[–] 23463 16.6	⊕ ABS	Luc	82063100		⊕ rear disc brake
			Luc	82051700		⊖ ABS		91064400	ø 203.2 x 36.5	⊖ ABS
			Luc	82059700		⊕ ABS		97034200		⊖ ABS
			Luc	82063500				92056400	ø 258 x 10 x 45	⊕ rear disc brake
				92056300	ø 257 x 22 x 49	⊖ ABS		94026900	ø 203,0 x 43.5	⊕ rear drum brake ⊖ ABS →03/05
				92109300	ø 280 x 22 x 49	⊕ ABS				
1.8	06/00→	466400 88 / 120	Luc	2346302	[–] 23463 16.6		Luc	2154501	[–] 21545 15.6	⊕ rear disc brake
1.8	07/00→	84 / 114								
1.8	10/02→	85 / 116	Luc	82059700			Ake	2171301	[+] 21713 16.4	⊕ rear disc brake ⊕ J-made
2.2 dCi	09/03→	82 / 112								
2.2 Di	07/00→	81 / 110	Luc	82063500			Luc	82063100		⊕ rear disc brake
				92109300	ø 280 x 22 x 49			91064400	ø 203.2 x 36.5	⊖ ABS
								97034200		⊖ ABS
								92056400	ø 258 x 10 x 45	⊕ rear disc brake
1.8	01/02→	466500 94 / 128	Luc	2346302	[–] 23463 16.6		Luc	2154501	[–] 21545 15.6	⊕ rear disc brake
			Luc	82059700			Ake	2171301	[+] 21713 16.4	⊕ rear disc brake ⊕ J-made
			Luc	82063500			Luc	82063100		⊕ rear disc brake
				92109300	ø 280 x 22 x 49			91064400	ø 203.2 x 36.5	⊖ ABS
								92056400	ø 258 x 10 x 45	⊕ rear disc brake
2.2 dCi	09/03→	466600 100 / 136	Luc	2346302	[–] 23463 16.6		Luc	2154501	[–] 21545 15.6	⊕ rear disc brake →05/07
			Luc	82059700			Ake	2171301	[+] 21713 16.4	⊕ rear disc brake ⊕ J-made
			Luc	82063500			Luc	82063100		⊕ rear disc brake →05/07
				92109300	ø 280 x 22 x 49			91064400	ø 203.2 x 36.5	⊖ ABS
								97034200		⊖ ABS
								92056400	ø 258 x 10 x 45	⊕ rear disc brake
ALMERA II Hatchback (N16) 01/00→													
1.5	03/00→	466700 66 / 90	Luc	2154601	[–] 21546 17.5	⊖ ABS	Luc	2154501	[–] 21545 15.6	⊕ rear disc brake
			Luc	2346302	[–] 23463 16.6	⊕ ABS	Ake	2171301	[+] 21713 16.4	⊕ rear disc brake ⊕ J-made
			Luc	82051700		⊖ ABS	Luc	82063100		⊕ rear disc brake
			Luc	82059700		⊕ ABS		91064400	ø 203.2 x 36.5	⊖ ABS
			Luc	82063500				97034200		⊖ ABS
				92056300	ø 257 x 22 x 49	⊖ ABS		92056400	ø 258 x 10 x 45	⊕ rear disc brake
				92109300	ø 280 x 22 x 49	⊕ ABS		94026900	ø 203,0 x 43.5	⊖ ABS ⊕ rear drum brake 09/00→ →03/05
1.5	10/02→	466800 72 / 98	Luc	2154601	[–] 21546 17.5	⊖ ABS	Luc	2154501	[–] 21545 15.6	⊕ rear disc brake
			Luc	2346302	[–] 23463 16.6	⊕ ABS	Ake	2171301	[+] 21713 16.4	⊕ rear disc brake ⊕ J-made
			Luc	82051700		⊖ ABS	Luc	82063100		⊕ rear disc brake
			Luc	82059700		⊕ ABS		91064400	ø 203.2 x 36.5	⊖ ABS
			Luc	82063500				97034200		⊖ ABS
				92056300	ø 257 x 22 x 49	⊖ ABS		92056400	ø 258 x 10 x 45	⊕ rear disc brake
				92109300	ø 280 x 22 x 49	⊕ ABS		94026900	ø 203,0 x 43.5	⊕ rear drum brake ⊖ ABS →03/05

N - P

			kW / hp												
ALMERA II Hatchback (N16) 01/00→															
		466900		Luc		**2154601**	[–] 21546 17.5	⊖ ABS	Luc		**2154501**	[–] 21545 15.6	⊕ rear disc brake
1.5 dCi	01/03→	60 / 82		Luc		**2346302**	[–] 23463 16.6	⊕ ABS	Luc		**82063100**		⊕ rear disc brake
				Luc		**82051700**		⊖ ABS			**91064400**	ø 203.2 x 36.5	⊖ ABS
				Luc		**82059700**		⊕ ABS			**97034200**		⊖ ABS
				Luc		**82063500**					**92056400**	ø 258 x 10 x 45	⊕ rear disc brake
						92056300	ø 257 x 22 x 49	⊖ ABS			**94026900**	ø 203,0 x 43.5	⊕ rear drum brake ⊖ ABS →03/05
						92109300	ø 280 x 22 x 49	⊕ ABS					
		467000		Luc		**2154601**	[–] 21546 17.5	⊖ ABS	Luc		**2154501**	[–] 21545 15.6	⊕ rear disc brake
1.5 XL	03/01→	77 / 105		Luc		**2346302**	[–] 23463 16.6	⊕ ABS	Ake		**2171301**	[+] 21713 16.4	⊕ rear disc brake ⊕ J-made
				Luc		**82051700**		⊖ ABS	Luc		**82063100**		⊕ rear disc brake
				Luc		**82059700**		⊕ ABS			**91064400**	ø 203.2 x 36.5	⊖ ABS
				Luc		**82063500**					**92056400**	ø 258 x 10 x 45	⊕ rear disc brake
						92056300	ø 257 x 22 x 49	⊖ ABS			**94026900**	ø 203,0 x 43.5	⊕ rear drum brake ⊖ ABS →03/05
						92109300	ø 280 x 22 x 49	⊕ ABS					
		467100		Luc		**2346302**	[–] 23463 16.6		Luc		**2154501**	[–] 21545 15.6	⊕ rear disc brake
1.8	01/00→	84 / 114		Luc		**82059700**			Ake		**2171301**	[+] 21713 16.4	⊕ rear disc brake ⊕ J-made
1.8	10/02→	85 / 116		Luc		**82063500**			Luc		**82063100**		⊕ rear disc brake
2.2 dCi	09/03→	82 / 112				**92109300**	ø 280 x 22 x 49				**91064400**	ø 203.2 x 36.5	⊖ ABS
											97034200		⊖ ABS
											92056400	ø 258 x 10 x 45	⊕ rear disc brake
		467200		Luc		**2346302**	[–] 23463 16.6		Luc		**2154501**	[–] 21545 15.6	⊕ rear disc brake
1.8	08/02→	94 / 128		Luc		**82059700**			Ake		**2171301**	[+] 21713 16.4	⊕ rear disc brake ⊕ J-made
				Luc		**82063500**			Luc		**82063100**		⊕ rear disc brake
						92109300	ø 280 x 22 x 49				**91064400**	ø 203.2 x 36.5	⊖ ABS
											92056400	ø 258 x 10 x 45	⊕ rear disc brake
		467300		Luc		**2346302**	[–] 23463 16.6		Luc		**2154501**	[–] 21545 15.6	⊕ rear disc brake →05/07
2.2 dCi	09/03→	100 / 136		Luc		**82059700**			Ake		**2171301**	[+] 21713 16.4	⊕ rear disc brake ⊕ J-made
				Luc		**82063500**			Luc		**82063100**		⊕ rear disc brake →05/07
						92109300	ø 280 x 22 x 49				**91064400**	ø 203.2 x 36.5	⊖ ABS
											97034200		⊖ ABS
											92056400	ø 258 x 10 x 45	⊕ rear disc brake
		467400		Luc		**2346302**	[–] 23463 16.6		Luc		**2154501**	[–] 21545 15.6	⊕ rear disc brake
2.2 Di	03/00→	81 / 110		Luc		**82059700**			Ake		**2171301**	[+] 21713 16.4	⊕ rear disc brake ⊕ J-made
				Luc		**82063500**		08/02→	Luc		**82063100**		⊕ rear disc brake
						92109300	ø 280 x 22 x 49				**91064400**	ø 203.2 x 36.5	⊖ ABS
											97034200		⊖ ABS
											92056400	ø 258 x 10 x 45	⊕ rear disc brake

ALMERA Hatchback (N15) 07/95→07/00 → ALMERA I Hatchback (N15), Page 743

ALMERA Hatchback (N15) 07/95→07/00 → ALMERA I Hatchback (N15), Page 743

ALMERA Mk II (N16) 01/00→ → ALMERA II Hatchback (N16), Page 744

ALMERA Mk II (N16) 06/00→ → ALMERA II (N16), Page 743

30 kW / hp													
ALMERA TINO (V10) 08/00→													
		467500	Luc		2309501	[–] 23095 17		Luc		2154501	[–] 21545 15.6	
1.8	08/00→	84 / 114										
1.8	12/02→	85 / 116	Luc		2309401	[+] 23094 17		Luc		82063100		
2.0	08/00→	100 / 136										
2.2 dCi	09/03→	82 / 112	Luc		82061200			PRO		92125703	ø 278 x 10 x 45	
2.2 dCi	09/03→	100 / 136										
2.2 Di	08/00→	84 / 115	Luc		82063500							
			PRO		92109403	ø 280 x 28 x 49						
ALTIMA 06/97→08/01													
		467600	Sum		2156101	[+] 21561 17		Ake		2171301	[+] 21713 16.4	
2.4	06/97→08/01	112 / 152										
ALTIMA 08/01→09/06													
		467700	Sum		2156101	[+] 21561 17		Ake		2387101	[+] 23871 13.8	
2.5	08/01→09/06	121 / 165										
3.5	08/01→09/06	180 / 245										
ALTIMA 10/06→													
		467800	Sum		2156101	[+] 21561 17		Ake		2387101	[+] 23871 13.8	
2.5	10/06→	128 / 174										
2.5 Hybrid	10/06→	118 / 160										
3.5	10/06→	201 / 273										
ALTIMA Coupe 10/06→													
		467900	Sum		2156101	[+] 21561 17		Ake		2387101	[+] 23871 13.8	
2.5 Hybrid	10/06→	118 / 160										
APRIO 07/08→													
		468000	Luc		2146306	[–] 21463 18.2						
1.6	07/08→	76 / 103										
1.6	10/09→	64 / 87	Luc		2146304	[+] 21463 18.2						
ARMADA (R51) 09/04→12/07 → PATHFINDER (R51), Page 756													
ARMADA 08/03→12/06													
		468100	Bos		2410601	[+] 24106 18		Bos		2411102	[+] 24111 17.1	
5.6	08/03→12/06	227 / 309										
		468200	Bos		2410601	[+] 24106 18	⊖ incr. ground clear.	Bos		2411102	[+] 24111 17.1	
5.6 4x4	08/03→12/06	227 / 309										
ATLEON 09/00→													
		468300	Brembo PF 2.52 - brake		2916002	[o] 29160 19.9						
110.35, 120.35	09/00→	78-88 / 106-120										
		468400	Brembo PF 2.52 - brake		2916002	[o] 29160 19.9						
110.56, 120.56	09/00→	78-88 / 106-120										
120.45	09/03→	87 / 118										
120.56	09/03→	87 / 118			93240600	ø 290 x 26 x 53						
140.70	09/03→	100 / 136										
140.75	09/00→	100 / 136										
140.80	09/03→	100 / 136										
165.120	09/03→	117 / 159										
165.130	09/03→	117 / 159										
165.75	09/00→	117 / 159										
165.95	09/03→	117 / 159										
210.120	09/03→	151 / 205										
210.130	09/03→	151 / 205										
210.150	09/03→	151 / 205										
BASSARA 11/99→08/03													
		468500	Nis		2342001	[+] 23420 16.5						
2.4	11/99→08/02	110 / 150										
2.5	06/02→08/03	121 / 165										
2.5 DCi	11/99→08/03	110 / 150										
3.0	11/99→08/03	162 / 220										
CABSTAR 09/06→07/11													
		468600	Bre		2922902	[+] 29229 21.4		Bre		2392103	[+] 23921 20.1	
28.11	10/06→	81 / 110										
28.12	10/06→	90 / 121						Bre		82505900		
35.12	10/06→	90 / 121										
35.13	09/06→03/09	96 / 131										
35.14	10/06→	100 / 136										
35.15	10/06→	101-110 / 137-150										
		468700	Bre		2922902	[+] 29229 21.4		Bre		2392103	[+] 23921 20.1	
32.11	01/07→07/11	81 / 110										
35.11	09/06→03/09	81 / 110										
		468800	Bre		2922902	[+] 29229 21.4		Bre		2912113	[+] 29121 20.3	
45.13	10/06→	96 / 131										
45.15	10/06→	110 / 150						Bre		82505900		
CABSTAR E 10/98→10/06													
		468900	Bos		2343501	[+] 23435 17.7						
105.35, 110.35	10/98→10/06	78-88 / 106-120	Ben		2998401	[+] 29984 17						
110.45	10/98→10/06	78 / 106										

		kW / hp										
CABSTAR E 10/98→10/06												
120.35, 125.35	10/98→10/06	88-92 / 120-125		93191900	ø 263 x 24 x 53							
120.45	10/98→10/06	88 / 120										
75.28	10/98→10/06	55 / 75	PRO	93185303	ø 276 x 24 x 49.5							
		469000	Bos	2343501	[+] 23435 17.7							
90.32	10/98→10/06	66 / 90	Ben	2998401	[+] 29984 17							
				93191900	ø 263 x 24 x 53							
CABSTAR E Pickup 09/07→12/08												
		469100	Bre	2922902	[+] 29229 21.4	⊕ 3500 kg payload	Bre	2392103	[+] 23921 20.1	⊕ 3500 kg payload		
2.5 D	09/07→12/08	110 / 150		93240600	ø 290 x 26 x 53	⊕ 4500 kg payload	Bre	2912113	[+] 29121 20.3	⊕ 4500 kg payload		
CABSTAR E Pick-up 09/07→12/08 → CABSTAR E Pickup, Page 747												
CABSTAR Platform/Chassis (F23, H41, H42) 01/92→09/11												
		469200	Ake	2458501	[–] 24585 18			91050400	ø 295 x 62	⊕ high-load. platf.		
2.5 D	01/92→12/00	55 / 75	PRO	92172703	ø 262 x 26 x 37							
		469300	Bos	2343501	[+] 23435 17.7	max.GVM 3500 kg	Bre	2392103	[+] 23921 20.1	max.GVM 3500 kg		
2.5 dCi	10/06→09/11	96 / 131										
35 DI 3.0	01/04→12/06	92 / 125	Bre	2922902	[+] 29229 21.4	max.GVM 3500 kg	Bre	2912113	[+] 29121 20.3	max.GVM 4500 kg		
				93240600	ø 290 x 26 x 53	⊖ RUS max.GVM 4500 kg						
CABSTAR Pritsche/Fahrgestell (F23, H41, H42) 01/92→09/11 → CABSTAR Platform/Chassis (F23, H41, H42), Page 747												
CAMIONES / FRONTIER (D40) 10/04→ → NAVARA (D40), Page 753												
CEFIRO I Saloon (J31) 01/00→												
		469400	Tok	2318401	[+] 23184 14.5		Ake	2171301	[+] 21713 16.4			
2.0	01/00→	103 / 140										
2.5	01/00→	154 / 209										
3.0	01/00→	147 / 200										
3.5	01/00→09/03	221 / 300	PRO	92109403	ø 280 x 28 x 49		PRO	92113103	ø 278 x 9 x 44.5			
CEFIRO I Stufenheck (J31) 01/00→ → CEFIRO I Saloon (J31), Page 747												
CEFIRO Saloon 10/94→12/99												
		469500	Sum	2156101	[+] 21561 17		Ake	2171301	[+] 21713 16.4			
2.0	10/94→12/99	103 / 140					PRO	92113103	ø 278 x 9 x 44.5			
		469600					Ake	2171301	[+] 21713 16.4			
2.5	10/94→12/99	140 / 190					PRO	92113103	ø 278 x 9 x 44.5			
		469700	Sum	2308601	[+] 23086 17		Ake	2171301	[+] 21713 16.4			
3.0	10/94→12/99	142 / 193					PRO	92113103	ø 278 x 9 x 44.5			
CEFIRO Stufenheck 10/94→12/99 → CEFIRO Saloon, Page 747												
CUBE (Z10) 03/98→12/02												
		469800	Ake	2300501	[+] 23005 15.5	→11/99						
1.3	03/98→08/00	55 / 75	Ake	2464701	[+] 24647 15.4	11/99→						
		469900	Ake	2464701	[+] 24647 15.4							
1.3	09/00→12/02	63 / 86										
1.3	09/00→12/02	74 / 101										
1.3 All-wheel Drive	09/00→12/02	63 / 86										
1.3 All-wheel Drive	09/00→12/02	74 / 101										
CUBE (Z11) 01/03→09/05												
		470000	Sum	2468201	[+] 24682 14.2							
1.4	01/03→09/05	72 / 98										
1.4 4x4	01/03→09/05	72 / 98										
1.5	01/03→09/05	80 / 109										
1.5 4x4	01/03→09/05	80 / 109										
CUBE (Z12) 03/10→12/12												
		470100	Hit	2428001	[+] 24280 16		Ake	2387101	[+] 23871 13.8			
1.5 dCi	03/10→	78 / 106										
1.5 dCi	03/10→	81 / 110										
1.6 16V	03/10→	81 / 110						91068200	ø 172 x 32			
		470200	Sum	2156201	[+] 21562 17		Ake	2487101	[+] 24871 13.8			
1.8	09/10→12/12	91 / 124	Sum	82514800			Ake	82514600				
								91068200	ø 172 x 32			

		kW / hp											
DUALIS (J10, JJ10) 02/07→ → QASHQAI / QASHQAI +2 (J10, JJ10), Page 764													
ELGRAND (E50) 10/95→08/01													
		470300	Nis		**2342001**	[+] 23420 16.5							
3.2 D 4x4 (AVWE50)	10/95→08/01	110 / 150											
ELGRAND (E51) 05/02→12/10													
		470400	Nis		**2342001**	[+] 23420 16.5		Ake		**2387101**	[+] 23871 13.8		
2.5	12/04→12/10	137 / 186											
2.5 AWD	12/04→12/10	137 / 186								**92149300**	ø 308 x 16 x 62.1		
3.0 D	04/03→12/10	113 / 154											
3.5	05/02→12/10	177 / 241											
3.5 AWD	05/02→12/10	177 / 241							PRO	**92149303**	ø 308 x 16 x 62.1		
ELGRAND (E52) 11/10→													
		470500						Ake		**2487101**	[+] 24871 13.8		
2.5	11/10→	125 / 170											
2.5 AWD	11/10→	125 / 170								**92149300**	ø 308 x 16 x 62.1		
3.5	11/10→	206 / 280											
3.5 AWD	11/10→	206 / 280							PRO	**92149303**	ø 308 x 16 x 62.1		
FAIRLADY Z (Z33) 09/02→ → 350 Z (Z33), Page 742													
FAIRLADY Z Roadster (Z33) 09/03→12/05 → 350 Z Roadster (Z33), Page 742													
FRONTIER (D40) 10/04→ → NAVARA (D40), Page 753													
GT-R (R35) 12/08→													
		470600								**91073100**	ø 190 x 20		
3.8 V6	12/08→	353 / 480											
3.8 V6	02/09→	357 / 486											
3.8 V6	09/10→	406 / 552											
3.8 V6	02/11→	390 / 530											
3.8 V6	02/12→	404 / 550											
3.8 V6	07/14→	441 / 600											
3.8 V6	07/14→	444 / 604											
ICHI Box 09/90→05/01													
		470700	Ake		**2109901**	[–] 21099 17							
1.6	09/90→05/01	75 / 102											
2.0 D	09/90→05/01	51 / 69											
ICHI Bus 09/90→05/01													
		470800	Ake		**2109901**	[–] 21099 17							
1.6	09/90→05/01	75 / 102											
2.0 D	09/90→05/01	51 / 69											
ICHI Kasten 09/90→05/01 → ICHI Box, Page 748													
INTERSTAR Box (X70) 07/02→													
		470900	Bos		**2361301**	[–] 23613 17.8		Bos		**2366901**	[–] 23669 16.8		
dCi 100	11/03→	73 / 99											
dCi 100	04/06→	74 / 101	Bos		**82076300**			Bos		**82063800**			
dCi 120	07/02→	84 / 115											
dCi 120	09/06→	88 / 120						Bos		**82510100**			
dCi 140	11/03→	100 / 136		PRO	**92115903**	ø 305.5 x 28 x 77.8							
dCi 150	09/06→	107 / 145							PRO	**92111203**	ø 305 x 12 x 66.8		
dCi 80	07/02→	60 / 82			**TPM0004**					**TPM0004**			
dCi 90	07/02→	66 / 90								**91062700**	ø 172 x 22		
										97035200			
INTERSTAR Bus (X70) 07/02→													
		471000	Bos		**2361301**	[–] 23613 17.8		Bos		**2366901**	[–] 23669 16.8		
dCi 100	11/03→	73 / 99											
dCi 100	04/06→	74 / 101	Bos		**82076300**			Bos		**82063800**			
dCi 120	07/02→	84 / 115											
dCi 120	09/06→	88 / 120						Bos		**82510100**			
dCi 140	11/03→	100 / 136		PRO	**92115903**	ø 305.5 x 28 x 77.8							
dCi 150	09/06→	107 / 145							PRO	**92111203**	ø 305 x 12 x 66.8		
dCi 80	07/02→	60 / 82			**TPM0004**					**TPM0004**			
dCi 90	07/02→	66 / 90								**91062700**	ø 172 x 22		
										97035200			
INTERSTAR Kasten (X70) 07/02→ → INTERSTAR Box (X70), Page 748													
INTERSTAR Platform/Chassis 08/03→													
		471100	Bos		**2361301**	[–] 23613 17.8		Bos		**2366901**	[–] 23669 16.8		
dCi 100	02/04→	73 / 99											
dCi 120	08/03→	84 / 115	Bos		**82076300**			Bos		**82063800**			
dCi 120	08/06→	88 / 120											
dCi 140	11/03→	100 / 136						Bos		**82510100**			
dCi 150	08/06→	107 / 145		PRO	**92115903**	ø 305.5 x 28 x 77.8							

		kW / hp												
INTERSTAR Platform/Chassis 08/03→														
		471100												
dCi 100	02/04→	73 / 99			TPM0004						92111203	ø 305 x 12 x 66.8		
dCi 120	08/03→	84 / 115									TPM0004			
dCi 120	08/06→	88 / 120									91062700	ø 172 x 22		
dCi 140	11/03→	100 / 136									97035200			
dCi 150	08/06→	107 / 145												
INTERSTAR Pritsche/Fahrgestell 08/03→ → INTERSTAR Platform/Chassis, Page 748														
JUKE (F15) 06/10→														
		471200	Sum		2156201	[+] 21562 17			Ake		2487101	[+] 24871 13.8		
1.2 DIG-T	05/14→	85 / 116	Sum		82514800				Ake		82514600			
					92232203	ø 280 x 24 x 43.9					92167500	ø 291 x 9 x 62.3		
											92167503	ø 291 x 9 x 62.3		
		471300	Sum		2156201	[+] 21562 17			Ake		2577801	[+] 25778 13.8		
1.5 dCi	06/10→	81 / 110	Sum		82514800				Ake		82514600			
1.6	06/10→	86 / 117			92232203	ø 280 x 24 x 43.9					92167500	ø 291 x 9 x 62.3		
											92167503	ø 291 x 9 x 62.3		
											91068200	ø 172 x 32		
											97036900			
		471400	Sum		2156201	[+] 21562 17			Ake		2487101	[+] 24871 13.8	⊕ rear disc brake	
1.6	01/13→	69 / 94	Sum		82514800				Ake		82514600		⊕ rear disc brake	
					92232203	ø 280 x 24 x 43.9					92167500	ø 291 x 9 x 62.3	⊕ rear disc brake	
											92167503	ø 291 x 9 x 62.3	⊕ rear disc brake	
											91068200	ø 172 x 32		
		471500	Sum		2156201	[+] 21562 17			Ake		2577801	[+] 25778 13.8		
1.6 DIG-T	06/10→	140 / 190	Sum		82514800				Ake		82514600			
											92167500	ø 291 x 9 x 62.3		
											92167503	ø 291 x 9 x 62.3		
											91068200	ø 172 x 32		
											97036900			
		471600	Sum		2156201	[+] 21562 17			Ake		2577801	[+] 25778 13.8		
1.6 DIG-T 4x4	06/10→	140 / 190	Sum		82514800				Ake		82514600			
											91068200	ø 172 x 32		
											97036900			
		471700	Sum		2156201	[+] 21562 17			Ake		2577801	[+] 25778 13.8		
1.6 DIG-T NISMO	11/12→	147 / 200							Ake		82514600			
1.6 DIG-T NISMO 4x4	02/13→	147 / 200									92167500	ø 291 x 9 x 62.3		
											92167503	ø 291 x 9 x 62.3		
											91068200	ø 172 x 32		
KUBISTAR (X76) 08/03→														
		471800	Bos		2198003	[+] 21980 18			Ben		91052700	ø 228.6 x 42	⊕ incr. payload	
1.2	08/03→	44 / 60	Bos		82063700				Ben		91052800	ø 203.2 x 37	⊖ incr. payload	
1.2 16V	04/06→	55 / 75			92036203	ø 238 x 20 x 41			Ben		97010000		⊕ incr. payload	
1.5 dCi	08/03→	42 / 57			92100903	ø 259 x 20.6 x 41			Ben		97014300		⊖ incr. payload	
1.5 dCi	08/03→	48 / 65												
1.5 dCi	08/03→	60 / 82												
1.5 dCi	08/05→	45 / 61												
1.5 dCi 70	04/06→	50 / 68												
1.5 dCi 85	04/06→	62 / 85												
1.6 16V	08/03→	70 / 95												

N - P

		kW / hp											
KUBISTAR (X76) 08/03→													
		471800											
1.2	08/03→	44 / 60			TPM0004					84052701	bore ø 22.2 ø 228.6 x 42	⊕ incr. payload
1.2 16V	04/06→	55 / 75										
1.5 dCi	08/03→	42 / 57								84052800	bore ø 22.2 ø 203.2 x 37	⊖ incr. payload
1.5 dCi	08/03→	48 / 65										
1.5 dCi	08/03→	60 / 82								94013700	ø 228,6 x 52.5	⊕ incr. payload
1.5 dCi	08/05→	45 / 61										
1.5 dCi 70	04/06→	50 / 68								94027100	ø 203,3 x 50.5	⊖ incr. payload
1.5 dCi 85	04/06→	62 / 85										
1.6 16V	08/03→	70 / 95										
KUBISTAR Box (X80) 08/03→													
		471900	Bos		2198003	[+] 21980 18		Ben		91052700	ø 228.6 x 42	⊕ incr. payload
1.2	08/03→	44 / 60										
1.2 16V	04/06→	55 / 75	Bos		82063700			Ben		91052800	ø 203.2 x 37	⊖ incr. payload
1.5 dCi	08/03→	48 / 65										
1.5 dCi	08/03→	60 / 82		PRO	92036203	ø 238 x 20 x 41		Ben		97010000		⊕ incr. payload
1.5 dCi	08/05→	45 / 61										
1.6 16V	08/03→	70 / 95		PRO	92100903	ø 259 x 20.6 x 41		Ben		97014300		⊖ incr. payload
					TPM0004					84052701	bore ø 22.2 ø 228.6 x 42	⊕ incr. payload
										84052800	bore ø 22.2 ø 203.2 x 37	⊖ incr. payload
										94013700	ø 228,6 x 52.5	⊕ incr. payload
										94027100	ø 203,3 x 50.5	⊖ incr. payload
KUBISTAR Kasten (X80) 08/03→ → KUBISTAR Box (X80), Page 750													
LEAF 11/10→													
		472000	Tok		2422704	[+] 24227 15.4		Ake		2577801	[+] 25778 13.8	
Electric	11/10→	80 / 109								92144000	ø 292 x 16 x 62	
				PRO					PRO	92144003	ø 292 x 16 x 62	
										91068200	ø 172 x 32	
LIVINA /GRAND LIVINA (L10) 02/07→													
		472100	Sum		2468201	[+] 24682 14.2						
1.5	03/09→	80 / 109										
1.6	02/07→	80 / 109										
1.6 Flex	03/09→	80 / 109										
1.8	03/09→	92 / 125										
1.8 Flex	03/09→	93 / 126										
MARCH II (K11) 08/92→02/03 → MICRA II (K11), Page 751													
MARCH III (K12) 01/03→06/10 → MICRA III (K12), Page 752													
MARCH IV (K13) 05/10→ → MICRA IV (K13), Page 752													
MAXIMA (A32) 03/94→12/01 → MAXIMA QX (A32), Page 750													
MAXIMA IV Saloon (J31) 01/00→ → CEFIRO I Saloon (J31), Page 747													
MAXIMA IV Stufenheck (J31) 01/00→ → CEFIRO I Saloon (J31), Page 747													
MAXIMA V (J32) 07/08→ → TEANA II (J32), Page 766													
MAXIMA QX (A32) 03/94→12/01													
		472200	Sum		2156101	[+] 21561 17	→08/97	Ake		2171301	[+] 21713 16.4	
2.0	02/95→08/00	103 / 140	Sum		2308601	[+] 23086 17	08/97→		PRO	92113103	ø 278 x 9 x 44.5	
			Sum		82057000		08/97→					
					92069900	ø 280 x 22 x 49.3						
		472300	Sum		2308601	[+] 23086 17		Ake		2171301	[+] 21713 16.4	
2.5 V6 24V	02/95→08/00	140 / 190	Sum		82057000				PRO	92113103	ø 278 x 9 x 44.5	
					92069900	ø 280 x 22 x 49.3						
		472400	Sum		2308601	[+] 23086 17		Ake		2482501	[o] 24825 15	→12/98
3.0	03/94→03/99	142 / 193	Sum		82057000			Ake		2171301	[+] 21713 16.4	
				PRO	92109403	ø 280 x 28 x 49			PRO	92113103	ø 278 x 9 x 44.5	
		472500	Sum		2308601	[+] 23086 17		Ake		2482501	[o] 24825 15	→12/98
3.0	01/95→08/00	142 / 193	Sum		82057000			Ake		2171301	[+] 21713 16.4	
				PRO	92179003	ø 280 x 26 x 49			PRO	92113103	ø 278 x 9 x 44.5	

→

		kW / hp											
MAXIMA QX (A32) 03/94→12/01													
		472600		PRO	92179003	ø 280 x 26 x 49	→2000-07 2000-11→ →2001-06	Ake		2171301	[+] 21713 16.4	→1995-08
3.0	01/95→12/01	157 / 214							PRO	92113103	ø 278 x 9 x 44.5	
MAXIMA QX (A33) 04/99→11/03													
		472700	Tok		2318401	[+] 23184 14.5		Ake		2171301	[+] 21713 16.4	
2.0 V6 24V	03/00→11/03	103 / 140										
2.5 V6 24V	03/00→11/03	154 / 209	Tok		2318402	[+] 23184 14.5	⊕ i.W.I.	Sum		82057800		
3.0	04/99→08/03	147 / 200										
3.0 V6 24V	12/99→11/03	157 / 214										
3.0 V6 24V	03/00→11/03	147 / 200		PRO	92109403	ø 280 x 28 x 49			PRO	92113103	ø 278 x 9 x 44.5	
3.5	08/01→02/03	188 / 256										
3.5	03/03→11/03	190 / 258										
3.5	10/03→11/03	170 / 231										
		472800	Tok		2318401	[+] 23184 14.5	2000-01→	Ake		2171301	[+] 21713 16.4	2000-01→
3.0	09/99→12/01	166 / 226										
				PRO	92179003	ø 280 x 26 x 49	2000-11→		PRO	92113103	ø 278 x 9 x 44.5	2000-01→
MAXIMA QX Saloon (A33) 04/99→11/03 → MAXIMA QX (A33), Page 751													
MAXIMA QX Stufenheck (A33) 04/99→11/03 → MAXIMA QX (A33), Page 751													
MAXIMA Saloon (A32) 03/94→12/01 → MAXIMA QX (A32), Page 750													
MAXIMA Station Wagon 10/97→													
		472900	Sum		2308601	[+] 23086 17		Ake		2171301	[+] 21713 16.4	
2.0 QX	10/97→	103 / 140										
2.5 V6 24V	10/97→	140 / 190	Sum		82057000							
					92069900	ø 280 x 22 x 49.3						
		473000	Sum		2308601	[+] 23086 17		Ake		2482501	[o] 24825 15	→12/98
3.0 QX	10/97→	142 / 193										
			Sum		82057000			Ake		2171301	[+] 21713 16.4	
									PRO	92113103	ø 278 x 9 x 44.5	
MAXIMA Stufenheck (A32) 03/94→12/01 → MAXIMA QX (A32), Page 750													
MICRA II (K11) 08/92→02/03													
		473100	Ake		2162601	[–] 21626 15.8		Sum		2345401	[–] 23454 15	⊕ ABS
1.0 i 16V	08/92→09/00	40 / 54										
1.3 i 16V	08/92→09/00	55 / 75	Ake		82039500			Luc		82519600		⊕ ABS
					92063300	ø 234 x 12 x 45.2	⊖ ABS			91047200	ø 180 x 27	⊖ ABS →02/98
					92144300	ø 238 x 18 x 46.2	⊕ ABS			91058300	ø 180 x 27	⊖ ABS 02/98→
								Luc		97011900		⊖ ABS
										84047200	bore ø 17.5 ø 180 x 27	⊖ ABS →02/98
										92096500	ø 240 x 7 x 41	⊕ ABS
										94024500	ø 180 x 32.5	⊖ ABS
		473200	Ake		2162601	[–] 21626 15.8		Sum		2345401	[–] 23454 15	⊕ ABS
1.0 i 16V	09/00→02/03	44 / 60										
1.4 i 16V	09/00→02/03	60 / 82	Ake		82039500			Luc		82519600		⊕ ABS
					92063300	ø 234 x 12 x 45.2	⊖ ABS			91058300	ø 180 x 27	⊖ ABS
					92144300	ø 238 x 18 x 46.2	⊕ ABS	Luc		97011900		⊖ ABS
										92096500	ø 240 x 7 x 41	⊕ ABS
										94024500	ø 180 x 32.5	⊖ ABS
		473300	Ake		2162601	[–] 21626 15.8		Sum		2345401	[–] 23454 15	⊕ ABS
1.5 D	02/98→02/03	42 / 57										
			Ake		82039500			Luc		82519600		⊕ ABS
					92063300	ø 234 x 12 x 45.2	⊖ ABS			91047200	ø 180 x 27	⊖ ABS →02/98
					92144300	ø 238 x 18 x 46.2	⊕ ABS			91058300	ø 180 x 27	⊖ ABS
								Luc		97011900		⊖ ABS
										84047200	bore ø 17.5 ø 180 x 27	⊖ ABS →02/98
										92096500	ø 240 x 7 x 41	⊕ ABS

N - P

		kW / hp											
MICRA II (K11) 08/92→02/03													
		473300											
1.5 D	02/98→02/03	42 / 57									**94024500**	ø 180 x 32.5	⊖ ABS
MICRA III (K12) 01/03→06/10													
		473400	Luc		**2397301**	[–] 23973 17.3	⊕ GB-made		Lkh		**91062600**	ø 203.2 x 36.5	
1.0 16V	01/03→06/10	48 / 65											
1.2 16V	01/03→06/10	48 / 65	Sum		**2468201**	[+] 24682 14.2	⊕ J-made				**97031100**		
1.2 16V	01/03→06/10	59 / 80											
1.4 16V	01/03→06/10	65 / 88											
1.5 dCi	01/03→06/10	48 / 65	Luc		**82072200**		⊕ GB-made		Lkh		**84062600**	bore ø 19 ø 203.2 x 36.5	
1.5 dCi	09/03→06/10	60 / 82											
1.5 dCi	06/05→06/10	50 / 68											
1.5 dCi	06/05→06/10	63 / 86	Luc		**82063300**						**94026800**	ø 203,0 x 50.5	
160 SR	05/05→06/10	81 / 110											
				PRO	**92119203**	ø 260 x 22 x 44							
		473500	Luc		**2397301**	[–] 23973 17.3	→2005-05		Lkh		**91062600**	ø 203.2 x 36.5	→2005-05
1.3	08/04→	60 / 82											
				PRO	**92119203**	ø 260 x 22 x 44	→2005-05				**94026800**	ø 203,0 x 50.5	→2005-05
MICRA IV (K13) 05/10→													
		473600	Luc		**2440301**	[+] 24403 17.3					**91077100**	ø 203.2 x 39	
1.0 Bio	02/11→	54 / 73											
1.0 Flex	10/11→	55 / 75	Luc		**82072200**								
1.2	05/10→	56 / 76											
1.2	05/10→	59 / 80											
1.2 DIG	04/11→	72 / 98		PRO	**92239903**	ø 259.7 x 22 x 43.9							
1.5	11/10→	75 / 102											
1.5	01/11→	74 / 101											
1.5 D	01/11→	73 / 99											
1.6	09/11→	78 / 106											
1.6 Flex	10/11→	82 / 112											
MICRA C+C (K12) 08/05→													
		473700	Luc		**2397301**	[–] 23973 17.3			Lkh		**91062600**	ø 203.2 x 36.5	
1.4 16V	08/05→	65 / 88											
1.6 160 SR	08/05→	81 / 110	Luc		**82072200**						**97031100**		
			Luc		**82063300**				Lkh		**84062600**	bore ø 19 ø 203.2 x 36.5	
				PRO	**92119203**	ø 260 x 22 x 44					**94026800**	ø 203,0 x 50.5	
MISTRAL II (R20) 02/93→06/03 → TERRANO II (R20), Page 766													
MURANO (Z50) 08/03→													
		473800	Sum		**2369801**	[+] 23698 16			Ake		**2387101**	[+] 23871 13.8	
3.5	08/03→10/07	172 / 234											
3.5	08/03→10/07	180 / 245	Tok		**2405601**	[+] 24056 15.5			Ake		**82507600**		
3.5	09/06→	198 / 265											
3.5 4x4	08/03→	172 / 234											
3.5 4x4	11/04→06/08	180 / 245	Sum		**82507900**						**92149300**	ø 308 x 16 x 62.1	
3.5 4x4	09/06→	198 / 265											
					92162400	ø 320 x 28 x 49.2				PRO	**92149303**	ø 308 x 16 x 62.1	
											91073100	ø 190 x 20	
											97036800		
MURANO (Z51) 11/07→													
		473900	Sum		**2369801**	[+] 23698 16			Ake		**2487101**	[+] 24871 13.8	
2.5 4x4	01/10→	140 / 190											
3.5	11/07→	195 / 265	Sum		**82507900**				Ake		**82507600**		
3.5 4x4	11/07→	195 / 265											
3.5 4x4	10/08→	188 / 256											
					92162400	ø 320 x 28 x 49.2					**92149300**	ø 308 x 16 x 62.1	
										PRO	**92149303**	ø 308 x 16 x 62.1	
											91073100	ø 190 x 20	
		474000	Sum		**2369801**	[+] 23698 16	2008-06→ →2009-01 2010-08→		Ake		**2487101**	[+] 24871 13.8	2008-06→
3.5	11/07→	172 / 234											
			Sum		**2369803**	[+] 23698 17	2009-01→ →2010-08				**92149300**	ø 308 x 16 x 62.1	2008-06→
			Sum		**82507500**		2008-06→			PRO	**92149303**	ø 308 x 16 x 62.1	2008-06→
					92162400	ø 320 x 28 x 49.2	2008-06→				**91073100**	ø 190 x 20	2008-06→
		474100	Sum		**2369801**	[+] 23698 16			Ake		**2487101**	[+] 24871 13.8	
3.5	01/11→	191 / 260											
3.5 4x4	09/08→12/13	194 / 264	Sum		**82507500**						**92149300**	ø 308 x 16 x 62.1	
3.5 4x4	01/11→	191 / 260											
					92162400	ø 320 x 28 x 49.2				PRO	**92149303**	ø 308 x 16 x 62.1	
											91073100	ø 190 x 20	

N - P

30 kW / hp

NAVARA (D22) 01/97→04/05 → PICK UP (D22), Page 757

NAVARA (D40) 10/04→

474200			Sum		2369801	[+] 23698 16	⊕ rim size 17" →01/10		Bos		2411102	[+] 24111 17.1	
2.5 dCi	07/05→	106 / 144	Tok		2422701	[+] 24227 16.5	⊕ rim size 16"		Tok		2424001	[+] 24240 16	
			Sum		82507500		⊕ rim size 17"		Tok		82507700		
			Tok		82516200		⊕ rim size 16"				91076600	ø 295 x 57	
					92164400	ø 320 x 28 x 37.9	→01/10 ⊕ rim size 17"			PRO	92181603	ø 307 x 18 x 63	
					92199600	ø 296 x 28 x 38	⊕ rim size 16"				91073200	ø 190 x 33	
				PRO	92164403	ø 320 x 28 x 37.9	→01/10 ⊕ rim size 17"						
				PRO	92199603	ø 296 x 28 x 38	⊕ rim size 16"						
474300			Sum		2369801	[+] 23698 16	⊕ rim size 17"		Bos		2411102	[+] 24111 17.1	
2.5 dCi	12/05→	128 / 174											
2.5 dCi 4WD	10/06→	126 / 171	Tok		2422701	[+] 24227 16.5	⊕ rim size 16"		Tok		2424001	[+] 24240 16	
			Sum		82507500		⊕ rim size 17"		Tok		82507700		
			Tok		82516200		⊕ rim size 16"				91076600	ø 295 x 57	
					92164400	ø 320 x 28 x 37.9	⊕ rim size 17"			PRO	92181603	ø 307 x 18 x 63	
					92199600	ø 296 x 28 x 38	⊕ rim size 16"				91073200	ø 190 x 33	
				PRO	92164403	ø 320 x 28 x 37.9	⊕ rim size 17"						
				PRO	92199603	ø 296 x 28 x 38	⊕ rim size 16"						
474400			Sum		2369801	[+] 23698 16	⊕ rim size 17"		Bos		2411102	[+] 24111 17.1	
2.5 dCi 4WD	07/05→	128 / 174	Tok		2422701	[+] 24227 16.5	⊕ rim size 16"		Tok		2424001	[+] 24240 16	
			Sum		82507500		⊕ rim size 17"		Tok		82507700		
			Tok		82516200		⊕ rim size 16"				91076600	ø 295 x 57	
					92164400	ø 320 x 28 x 37.9	→01/10 ⊕ rim size 17"			PRO	92181603	ø 307 x 18 x 63	
					92199600	ø 296 x 28 x 38	⊕ rim size 16"				91073200	ø 190 x 33	
				PRO	92164403	ø 320 x 28 x 37.9	→01/10 ⊕ rim size 17"						
				PRO	92199603	ø 296 x 28 x 38	⊕ rim size 16"						
474500			Sum		2369801	[+] 23698 16	⊕ rim size 17" →01/10		Bos		2411102	[+] 24111 17.1	
2.5 dCi 4WD	12/09→	140 / 190	Tok		2422701	[+] 24227 16.5	⊕ rim size 16"		Tok		2424001	[+] 24240 16	
			Sum		82507500		⊕ rim size 17"		Tok		82507700		
			Tok		82516200		⊕ rim size 16"				91076600	ø 295 x 57	
					92164400	ø 320 x 28 x 37.9	01/10→ ⊕ rim size 17"			PRO	92181603	ø 307 x 18 x 63	
					92199600	ø 296 x 28 x 38	⊕ rim size 16"				91073200	ø 190 x 33	
				PRO	92164403	ø 320 x 28 x 37.9	01/10→ ⊕ rim size 17"						
				PRO	92199603	ø 296 x 28 x 38	⊕ rim size 16"						
474600			Sum		2369801	[+] 23698 16	⊕ rim size 17" Ø 320 mm				91076600	ø 295 x 57	→09/06
2.8 D	10/04→	101 / 137	Tok		2422701	[+] 24227 16.5	⊕ rim size 16" Ø 296 mm				91076600	ø 295 x 57	10/06→
					92164400	ø 320 x 28 x 37.9	⊕ rim size 17"						
					92199600	ø 296 x 28 x 38	⊕ rim size 16"						
				PRO	92164403	ø 320 x 28 x 37.9	⊕ rim size 17"						
				PRO	92199603	ø 296 x 28 x 38	⊕ rim size 16"						
474700			Tok		2422701	[+] 24227 16.5	⊕ rim size 16"		Bos		2411102	[+] 24111 17.1	
3.0 dCi 4WD	02/10→	170 / 231											

N - P

kW / hp

NAVARA (D40) 10/04→

474700			Sum		82507500			Tok		2424001	[+] 24240 16	
3.0 dCi 4WD	02/10→	170 / 231			92164400	ø 320 x 28 x 37.9		Tok		82507700		
					92199600	ø 296 x 28 x 38	⊕ rim size 16"			91076600	ø 295 x 57	
				PRO	92164403	ø 320 x 28 x 37.9			PRO	92181603	ø 307 x 18 x 63	
				PRO	92199603	ø 296 x 28 x 38	⊕ rim size 16"			91073200	ø 190 x 33	
474800			Sum		2369801	[+] 23698 16		Tok		2424001	[+] 24240 16	
4.0	12/05→11/09	198 / 269										
4.0 4WD	12/05→	198 / 269						Tok		82507700		

NAVARA Pickup (D40) 10/04→ → NAVARA (D40), Page 753

NAVARA Pick-up (D40) 10/04→ → NAVARA (D40), Page 753

NAVARA Platform/Chassis (D22) 03/97→01/08

474900			Ake		2109901	[–] 21099 17							
2.4 4WD	08/99→12/05	110 / 150											
2.5 Di 4WD	01/08→	98 / 133			92109500	ø 300 x 28 x 38							
3.2 D 4WD	04/98→12/01	76 / 103											
475000			Ake		2109901	[–] 21099 17							
2.4 i	03/97→08/99	93 / 126											
475100			Ake		2397001	[+] 23970 17							
3.0 TD 4WD	12/01→01/08	110 / 150			92109500	ø 300 x 28 x 38							

NAVARA Platform/Chassis (D40) 08/08→

475200			Sum		2369801	[+] 23698 16				91076600	ø 295 x 57	→10/11	
2.5 dCi	03/10→	140 / 190											
3.0 dCi	03/10→	170 / 231			92164400	ø 320 x 28 x 37.9							
				PRO	92164403	ø 320 x 28 x 37.9							
475300			Sum		2369801	[+] 23698 16	⊕ rim size 17" Ø 320 mm			91076600	ø 295 x 57		
2.5 dCi 4WD	08/08→	106 / 144											
2.5 dCi 4WD	08/08→	126 / 171	Tok		2422701	[+] 24227 16.5	⊕ rim size 16" Ø 296 mm						
			Sum		82507500		⊕ rim size 17"						
			Tok		82516200		⊕ rim size 16"						
					92164400	ø 320 x 28 x 37.9	⊕ rim size 17"						
					92199600	ø 296 x 28 x 38	⊕ rim size 16"						
				PRO	92164403	ø 320 x 28 x 37.9	⊕ rim size 17"						
				PRO	92199603	ø 296 x 28 x 38	⊕ rim size 16"						

NAVARA Pritsche/Fahrgestell (D22) 03/97→01/08 → NAVARA Platform/Chassis (D22), Page 754

NAVARA Pritsche/Fahrgestell (D40) 08/08→ → NAVARA Platform/Chassis (D40), Page 754

NOTE (E11) 03/06→

475400			Luc		2397301	[–] 23973 17.3	⊕ GB-made	Luc		2355406	[–] 23554 16.2	
1.4	03/06→	65 / 88										
1.5 dCi	03/06→	50 / 68	Sum		2468201	[+] 24682 14.2	⊕ J-made	Luc		82037300		
1.5 dCi	03/06→	63 / 86										
1.5 dCi	07/08→	76 / 103										
1.5 dCi	09/10→	66 / 90	Luc		82072200		⊕ GB-made	Luc		82503100		
1.6	03/06→	81 / 110										
			Luc		82063300			Luc		82063300		
				PRO	92119203	ø 260 x 22 x 44		Lkh		91062600	ø 203.2 x 36.5	
										97031100		
								Lkh		84062600	bore ø 19 ø 203.2 x 36.5	
									ABS	92154400	ø 240 x 8 x 80.8	
										94026800	ø 203,0 x 50.5	

NOTE 06/13→

475500			Luc		2440301	[+] 24403 17.3				91077100	ø 203.2 x 39	
1.2	06/13→	59 / 80										
1.2 DIG	06/13→	72 / 98		PRO	92239903	ø 259.7 x 22 x 43.9						
1.5 dCi	06/13→	66 / 90										

		kW / hp										
NOTE 06/13→												
1.6	06/13→	475600 81 / 110	Luc		2397301	[–] 23973 17.3		Lkh		91062600	ø 203.2 x 36.5	
				PRO	92119203	ø 260 x 22 x 44				94026800	ø 203,0 x 50.5	
NP300 04/08→												
2.0	08/08→	475700 84 / 114	Ake		2134702	[+] 21347 17						
			Ake		82056600							
				PRO	92186103	ø 260 x 26 x 40	→06/11					
2.4	08/08→	475800 105 / 143	Ake		2134702	[+] 21347 17	→08/09					
			Ake		2397001	[+] 23970 17	11/09→					
			Ake		82056600		03/11→					
					92109500	ø 300 x 28 x 38	11/09→ →01/10					
2.4 4x4	08/08→	475900 105 / 143	Ake		82056600		12/12→					
					92059000	ø 277 x 26 x 39.2						
				PRO	92059003	ø 277 x 26 x 39.2						
2.5 dCi	04/08→	476000 98 / 133	Ake		2134702	[+] 21347 17	→08/09 08/10→ →04/11					
			Ake		2397001	[+] 23970 17	01/10→ →03/11					
			Ake		82056600		08/10→					
					92074700	ø 260 x 26 x 37	08/10→					
					92109500	ø 300 x 28 x 38	01/10→ →03/11					
				PRO	92186103	ø 260 x 26 x 40	08/10→					
2.5 dCi 4x4	04/08→	476100 98 / 133	Ake		2134702	[+] 21347 17						
			Ake		2397001	[+] 23970 17	08/10→					
			Ake		82056600		03/11→					
					92109500	ø 300 x 28 x 38	03/11→					
2.7 d 2WD	08/08→	476200 64 / 87	Ake		2109901	[–] 21099 17	10/09→ →03/11					
			Ake		2134702	[+] 21347 17	03/11→					
			Ake		82056600		03/11→					
3.2 d 2WD	08/08→	476300 76 / 103	Ake		2134702	[+] 21347 17						
			Ake		82056600							
					92059000	ø 277 x 26 x 39.2						
				PRO	92059003	ø 277 x 26 x 39.2						
3.2 d 4WD	08/08→	476400 76 / 103	Ake		2134702	[+] 21347 17	10/09→					
			Ake		82056600		03/11→					
					92059000	ø 277 x 26 x 39.2	03/11→					
				PRO	92059003	ø 277 x 26 x 39.2	03/11→					
NP300 Caja/Chasis (D40) 08/08→ → NAVARA Platform/Chassis (D40), Page 754												
NP300 Pritsche/Fahrgestell (D40) 08/08→ → NAVARA Platform/Chassis (D40), Page 754												
NV200 Box 02/10→												
1.5 dci 1.5 dci 1.5 dci 1.6 16V	02/10→ 04/11→ 04/11→ 02/10→	476500 63 / 86 66 / 90 81 / 110 81 / 110	Tok		2508701	[+] 25087 16.8				91078400	ø 230 x 37	
				PRO	92253103	ø 257 x 26.2 x 53.7						
NV200 EVALIA 07/10→												
1.5 dci 1.5 dci 1.5 dci	07/10→ 04/11→ 04/11→	476600 63 / 86 66 / 90 81 / 110	Tok		2508701	[+] 25087 16.8				91078400	ø 230 x 37	

N - P

		kW / hp									
NV200 EVALIA 07/10→											
1.6 16V	07/10→	81 / 110		PRO 92253103	ø 257 x 26.2 x 53.7						
NV200 Kasten 02/10→ → NV200 Box, Page 755											
NV400 Box 11/11→											
		476700	Bre	2514701	[+] 25147 18		Bos	2511201	[+] 25112 18.1		
2.3 dCi	11/11→	74 / 101									
2.3 dCi	11/11→	92 / 125	Bos	82076300				92228700	ø 305 x 12 x 71.5		
2.3 dCi	11/11→	107 / 146		92228600	ø 302 x 28 x 70						
				TPM0004							
		476800	Bre	2514701	[+] 25147 18		Bos	2511201	[+] 25112 18.1	⊕ single tyre	
2.3 dCi [RWD]	11/11→	92 / 125									
2.3 dCi [RWD]	11/11→	107 / 146	Bos	82076300			Bre	2517201	[+] 25172 18	⊕ dual tyres	
				92228600	ø 302 x 28 x 70			92228800	ø 305 x 12 x 71.5	⊕ single tyre	
				TPM0004				92230800	ø 302 x 18 x 50.9	⊕ dual tyres	
NV400 Bus 11/11→											
		476900	Bre	2514701	[+] 25147 18		Bos	2511201	[+] 25112 18.1		
2.3 dCi	11/11→	74 / 101									
2.3 dCi	11/11→	92 / 125	Bos	82076300				92228700	ø 305 x 12 x 71.5		
2.3 dCi	11/11→	107 / 146		92228600	ø 302 x 28 x 70						
				TPM0004							
NV400 Kasten 11/11→ → NV400 Box, Page 756											
NV400 Platform/Chassis 11/11→											
		477000	Bre	2514701	[+] 25147 18		Bos	2511201	[+] 25112 18.1		
2.3 dCi	11/11→	74 / 101									
2.3 dCi	11/11→	92 / 125	Bos	82076300				92228700	ø 305 x 12 x 71.5		
2.3 dCi	11/11→	107 / 146		92228600	ø 302 x 28 x 70						
		477100	Bre	2514701	[+] 25147 18		Bos	2511201	[+] 25112 18.1	⊕ single tyre	
2.3 dCi [RWD]	11/11→	92 / 125									
2.3 dCi [RWD]	11/11→	107 / 146	Bos	82076300			Bre	2517201	[+] 25172 18	⊕ dual tyres	
				92228600	ø 302 x 28 x 70			92228800	ø 305 x 12 x 71.5	⊕ single tyre	
								92230800	ø 302 x 18 x 50.9	⊕ dual tyres	
NV400 Pritsche/Fahrgestell 11/11→ → NV400 Platform/Chassis, Page 756											
PATHFINDER (R50) 09/97→12/04											
		477200	Nis	2342001	[+] 23420 16.5			91056200	ø 295 x 52		
2.4	05/99→12/04	105 / 143									
2.4	09/99→02/02	87 / 118	Ake	82519100				97033000			
2.7 TD 4WD	09/97→12/04	96 / 131									
2.8 TD 4WD	05/01→12/04	101 / 137		92109500	ø 300 x 28 x 38						
3.2 TD 4WD	09/97→12/04	110 / 150									
3.3	05/99→12/04	125 / 170									
3.3 Turbo 4WD	05/99→12/04	154 / 209									
3.3 V6 4WD	09/97→12/04	125 / 170									
3.3 V6 4WD	03/98→10/00	110 / 150									
3.5 4WD	08/01→07/04	179 / 243									
3.5 V6 4WD	11/00→12/04	162 / 220									
PATHFINDER (R51) 09/04→12/07											
		477300	Sum	2369801	[+] 23698 16	⊕ rim size 17"	Tok	2424001	[+] 24240 16		
2.5 dCi	01/05→	128 / 174									
2.5 dCi 4WD	01/05→	120 / 163	Tok	2422701	[+] 24227 16.5	⊕ wheel Ø 16" →05/10	Tok	82507700			
2.5 dCi 4WD	03/05→	128 / 174	Sum	82507500		⊕ rim size 17"		PRO 92181603	ø 307 x 18 x 63		
2.5 dCi 4WD	10/06→	126 / 171	Tok	82516200		⊕ rim size 16"		91073200	ø 190 x 33		
				92164400	ø 320 x 28 x 37.9	⊕ rim size 17"					
				92199600	ø 296 x 28 x 38	⊕ rim size 16"					
				PRO 92164403	ø 320 x 28 x 37.9	⊕ rim size 17"					
				PRO 92199603	ø 296 x 28 x 38	⊕ rim size 16"					
		477400	Sum	2369801	[+] 23698 16	⊕ rim size 17"	Tok	2424001	[+] 24240 16		
2.5 dCi 4WD	08/10→	140 / 190									

		kW / hp										
PATHFINDER (R51) 09/04→12/07												
		477400	Sum		82507500		⊕ rim size 17"	Tok		82507700		
2.5 dCi 4WD	08/10→	140 / 190	Tok		82516200		⊕ rim size 16"		PRO	92181603	ø 307 x 18 x 63	
					92164400	ø 320 x 28 x 37.9	⊕ rim size 17"			91073200	ø 190 x 33	
					92199600	ø 296 x 28 x 38	⊕ rim size 16"					
				PRO	92164403	ø 320 x 28 x 37.9	⊕ rim size 17"					
				PRO	92199603	ø 296 x 28 x 38	⊕ rim size 16"					
		477500	Sum		2369801	[+] 23698 16		Tok		2424001	[+] 24240 16	
3.0 dCi	08/10→	170 / 231										
4.0	01/05→	198 / 269	Sum		82507500			Tok		82507700		
4.0 4WD	09/05→	198 / 269			92164400	ø 320 x 28 x 37.9			PRO	92181603	ø 307 x 18 x 63	
				PRO	92164403	ø 320 x 28 x 37.9				91073200	ø 190 x 33	
		477600	Sum		2369801	[+] 23698 16	2005-01→	Tok		2424001	[+] 24240 16	2005-01→
4.0	09/04→12/06	201 / 273										
4.0 4WD	09/04→12/07	201 / 273	Sum		82507500		2005-01→	Tok		82507700		2006-09→
					92164400	ø 320 x 28 x 37.9	2005-01→		PRO	92181603	ø 307 x 18 x 63	2005-01→
				PRO	92164403	ø 320 x 28 x 37.9	2005-01→			91073200	ø 190 x 33	2005-01→
PATROL II (GU) 05/98→												
		477700	Ake		2361101	[+] 23611 19		Sum		2350201	[+] 23502 16	
3.0 D 4x4 (Y61)	09/07→	118 / 160										
4.2 D 4x4 (Y61)	05/98→03/03	91 / 124	Ake		82512200			Sum		82511900		
4.2 D 4x4 (Y61)	05/99→09/07	114 / 155			92138300	ø 306 x 32 x 47				92129900	ø 316 x 18 x 80	
PATROL II Closed Off-Road Vehicle (Y61, GR_, GU) 06/97→ → PATROL GR II Wagon (Y61), Page 757												
PATROL II Wagon (Y61, GR_, GU) 06/97→ → PATROL GR II Wagon (Y61), Page 757												
PATROL III (Y62) 04/10→												
		477800	Ake		2524001	[+] 25240 17.8				2534001	[+] 25340 15	
5.6	04/10→	298 / 405										
PATROL GR II Wagon (Y61) 06/97→												
		477900	Ake		2361101	[+] 23611 19		Sum		2350201	[+] 23502 16	
2.7 TD	05/98→06/01	73 / 99										
2.8 TD	06/97→05/00	95 / 129	Ake		82512200			Sum		82511900		
2.8 TDiC	10/97→02/00	96 / 131										
3.0 D	05/00→09/04	116 / 158			92138300	ø 306 x 32 x 47				92129900	ø 316 x 18 x 80	
3.0 D All-wheel Drive	10/04→	118 / 160										
3.0 DTi	05/00→	116 / 158										
3.0 DTi	05/00→	118 / 160										
3.2 D	05/98→06/01	70 / 95										
4.2	03/00→08/02	125 / 170										
4.2 D	05/99→09/04	114 / 155										
4.2 D 4x4	05/98→03/03	91 / 124										
4.2 TD	06/97→	107 / 146										
4.5	12/97→09/01	145 / 197										
4.5 i	06/97→	147 / 200										
4.8	03/00→	180 / 245										
4.8	10/01→12/07	185 / 252										
		478000	Ake		2361101	[+] 23611 19		Sum		2350201	[+] 23502 16	
4.8	05/11→	190 / 258										
PATROL GR Mk II Closed Off-Road Vehicle (Y61) 06/97→ → PATROL GR II Wagon (Y61), Page 757												
PATROL GR Mk II Wagon (Y61) 06/97→ → PATROL GR II Wagon (Y61), Page 757												
PICK UP (D22) 01/97→04/05												
		478100	Ake		2134702	[+] 21347 17				91040500	ø 260 x 50	
2.0	01/97→08/01	92 / 125										
2.4	01/97→12/02	79 / 107	Ake		82056600							
2.4	02/98→10/01	87 / 118			92074700	ø 260 x 26 x 37	⊕ ABS					
2.4 4WD	01/97→12/02	79 / 107		PRO	92186103	ø 260 x 26 x 40	⊕ ABS					
2.5 Tdi	05/98→10/01	76 / 103										
2.7 TD	01/97→10/01	73 / 99										
2.7 TD 4WD	01/97→10/01	73 / 99										
3.2 TD	01/97→10/01	76 / 103										
		478200	Ake		2109901	[–] 21099 17	⊖ ABS			91040500	ø 260 x 50	
2.4	01/97→	76 / 103	Ake		2134702	[+] 21347 17	⊕ ABS					
			Ake		82056600		⊕ ABS					
					92074700	ø 260 x 26 x 37	⊖ ABS					

N - P

		kW / hp										
PICK UP (D22) 01/97→04/05												
478200												
2.4	01/97→	76 / 103		PRO	92186103	ø 260 x 26 x 40	⊕ ABS					
478300			Ake		2134702	[+] 21347 17				91040500	ø 260 x 50	
2.4	03/97→08/99	93 / 124										
2.4	11/01→04/05	98 / 133										
2.4	01/03→	110 / 150	Ake		82056600							
					92074700	ø 260 x 26 x 37	⊖ ABS					
				PRO	92186103	ø 260 x 26 x 40	⊕ ABS					
478400			Ake		2397001	[+] 23970 17				91056200	ø 295 x 52	
2.4	02/98→	116 / 155										
2.4 4WD	01/08→	96 / 131										
2.5 D 4WD	01/08→	96 / 131										
2.8 D	11/01→	101 / 137										
3.0	01/97→09/01	120 / 163										
3.0 4WD	02/98→10/01	120 / 163										
3.0 TD	11/01→	110 / 150										
3.0 TD 4WD	11/01→	110 / 150			92109500	ø 300 x 28 x 38						
478500			Ake		2109901	[–] 21099 17	⊖ ABS			91056200	ø 295 x 52	
2.4 4WD	01/97→	76 / 103	Ake		2134702	[+] 21347 17	⊕ ABS					
			Ake		82056600		⊕ ABS					
					92059000	ø 277 x 26 x 39.2	⊕ ABS					
					92070100	ø 267 x 22 x 39.2	⊖ ABS					
				PRO	92059003	ø 277 x 26 x 39.2	⊕ ABS					
478600			Ake		2109901	[–] 21099 17				91056200	ø 295 x 52	
2.4 4WD	11/01→04/05	110 / 150	Ake		2134702	[+] 21347 17						
			Ake		82056600							
					92109500	ø 300 x 28 x 38						
478700			Ake		2134702	[+] 21347 17	→10/01			91040500	ø 260 x 50	
2.4 i	02/98→	88 / 120										
2.5 D	02/98→	61 / 83	Ake		2397001	[+] 23970 17	11/01→			97033000		
			Ake		82056600		11/01→					
					92074700	ø 260 x 26 x 37	⊖ ABS					
				PRO	92186103	ø 260 x 26 x 40	⊕ ABS					
478800			Ake		2109901	[–] 21099 17				91056200	ø 295 x 52	
2.4 i 4WD	03/97→08/99	93 / 124			92070100	ø 267 x 22 x 39.2						
478900			Ake		2109901	[–] 21099 17	⊖ EU			91056200	ø 295 x 52	
2.4 i 4WD	02/98→	88 / 120	Ake		2134702	[+] 21347 17	→10/01 ⊕ EU			97033000		
			Ake		2397001	[+] 23970 17	11/01→ ⊕ EU					
			Ake		82056600		11/01→					
					92059000	ø 277 x 26 x 39.2	⊕ EU					
					92070100	ø 267 x 22 x 39.2	⊖ EU					
				PRO	92059003	ø 277 x 26 x 39.2	⊕ EU					
479000			Ake		2134702	[+] 21347 17	⊖ EU			91056200	ø 295 x 52	
2.4 i 4WD	03/02→	98 / 133	Ake		2397001	[+] 23970 17	⊕ EU			97033000		
			Ake		82056600		→04/11					
					92109500	ø 300 x 28 x 38						
				PRO	92186103	ø 260 x 26 x 40						
479100			Ake		2134702	[+] 21347 17	→10/01			91056200	ø 295 x 52	
2.5 D 4WD	02/98→	61 / 83	Ake		2397001	[+] 23970 17	11/01→			97033000		

		kW / hp										
PICK UP (D22) 01/97→04/05												
479100			Ake		82056600		11/01→					
2.5 D 4WD	02/98→	61 / 83										
479200			Ake		2134702	[+] 21347 17				91040500	ø 260 x 50	⊖ ABS
2.5 Di	03/02→	98 / 133	Ake		2397001	[+] 23970 17				91056200	ø 295 x 52	⊕ ABS
			Ake		82056600					97033000		
					92074700	ø 260 x 26 x 37	→01/08 ⊖ ABS					
					92109500	ø 300 x 28 x 38	01/08→ ⊖ ABS					
				PRO	92186103	ø 260 x 26 x 40	⊕ ABS					
479300			Ake		2397001	[+] 23970 17				91056200	ø 295 x 52	
2.5 Di 4WD	03/02→	98 / 133			92109500	ø 300 x 28 x 38				97033000		
479400			Ake		2134702	[+] 21347 17	→10/01			91056200	ø 295 x 52	
2.5 TD 4WD	05/98→	76 / 103										
3.2 D 4WD	12/98→	76 / 103	Ake		2397001	[+] 23970 17	11/01→			97033000		
			Ake		82056600		11/01→					
					92059000	ø 277 x 26 x 39.2						
				PRO	92059003	ø 277 x 26 x 39.2						
479500			Ake		2109901	[–] 21099 17	→11/01			91040500	ø 260 x 50	
2.7 D	02/98→	66 / 90	Ake		2134702	[+] 21347 17	11/01→					
			Ake		82056600		11/01→ →04/11					
					92074700	ø 260 x 26 x 37						
479600			Ake		2397001	[+] 23970 17				91056200	ø 295 x 52	
3.3 4WD	01/03→	125 / 170			92228400	ø 283 x 28 x 38						
PIXO (UA0) 06/09→												
479700			Sum		2350801	[+] 23508 17				91075200	ø 180 x 26	
1.0	06/09→	50 / 68	Bos		82514000							
					92204100	ø 231 x 20 x 51.4						
PLATINA 06/01→06/08												
479800			Luc		2146306	[–] 21463 18.2		Luc		91048000	ø 203.2 x 38	Lucas ⊕ ABS
1.6	03/02→06/08	82 / 112	Luc		2146304	[+] 21463 18.2		Bos		91053700	ø 180 x 42	Bosch ⊖ ABS
1.6 LT	06/01→09/05	79 / 107	Luc		82062800		⊕ ABS	Bos		91060200	ø 203.2 x 38	Bosch ⊕ ABS
				PRO	92036103	ø 238 x 12 x 41		Ben		97010400		Lucas ⊕ ABS
				PRO	92036203	ø 238 x 20 x 41				97031000		Bosch ⊕ ABS
				PRO	92100903	ø 259 x 20.6 x 41				94019700	ø 203,3 x 50.5	Lucas
										94023600	ø 180,2 x 53.5	Bosch
PRIMASTAR Box (X83) 09/02→												
479900			Luc		2309902	[+] 23099 18.4		Luc		2398001	[–] 23980 17	
2.0	02/03→	88 / 120										
dCi 100	09/02→	74 / 100	Luc		82063500			Luc		82037300		
dCi 115	09/08→	84 / 114										
dCi 120	09/06→	84 / 114		PRO	92116003	ø 305.5 x 28 x 49.7		Luc		82063300		
dCi 140	07/03→	99 / 135										
dCi 150	09/06→	107 / 145			TPM0004				ABS	92153700	ø 280 x 12 x 102.2	
dCi 80	09/02→	60 / 82										
dCi 90	09/06→	66 / 90										
PRIMASTAR Bus (X83) 03/01→												
480000			Luc		2309902	[+] 23099 18.4		Luc		2398001	[–] 23980 17	
2.0	03/01→	88 / 120										
dCi 100	03/01→	74 / 101	Luc		82063500			Luc		82037300		
dCi 115	09/08→	84 / 114										
dCi 120	09/06→	84 / 114		PRO	92116003	ø 305.5 x 28 x 49.7		Luc		82063300		
dCi 140	07/03→	99 / 135										
dCi 150	09/06→	107 / 145										
dCi 80	03/01→	60 / 80										

N - P

		kW / hp									
PRIMASTAR Bus (X83) 03/01→											
dCi 90	09/06→	66 / 90		TPM0004				92153700	ø 280 x 12 x 102.2	
PRIMASTAR Kasten (X83) 09/02→ → PRIMASTAR Box (X83), Page 759										
PRIMASTAR Platform/Chassis 07/02→08/06										
1.9 dCi	07/02→08/06	480100 74 / 101	Luc	2309902	[+] 23099 18.4		Luc	2398001	[–] 23980 17	
			Luc	82063500			Luc	82037300		
				92116003	ø 305.5 x 28 x 49.7		Luc	82063300		
				TPM0004				92153700	ø 280 x 12 x 102.2	
PRIMASTAR Pritsche/Fahrgestell 07/02→08/06 → PRIMASTAR Platform/Chassis, Page 760										
PRIMASTAR Van (X83) 03/01→ → PRIMASTAR Bus (X83), Page 759										
PRIMERA (P11) 06/96→12/01										
1.6 16V	06/96→12/01	480200 78 / 106	Luc	2154601	[–] 21546 17.5	→03/99	Luc	2154501	[–] 21545 15.6	04/99→
			Luc	2346302	[–] 23463 16.6	04/99→	Luc	82063100		04/99→
			Luc	82051700		→03/99	Ben	91052700	ø 228.6 x 42	→03/99
			Luc	82059700		04/99→	Bos	97010100		→03/99
			Luc	82063500				84052700	bore ø 20.6 ø 228.6 x 42	→03/99
				92056300	ø 257 x 22 x 49	→03/99		92056400	ø 258 x 10 x 45	04/99→ →05/99
				92109300	ø 280 x 22 x 49	04/99→		92128700	ø 278 x 10.3 x 45	06/99→
								94023300	ø 228,6 x 52	→03/99
1.6 16V	09/96→10/00	480300 73 / 99	Luc	2154601	[–] 21546 17.5	→03/99	Luc	2154501	[–] 21545 15.6	04/99→
			Luc	2346302	[–] 23463 16.6	04/99→	Luc	82063100		04/99→
			Luc	82051700		→03/99	Ben	91052700	ø 228.6 x 42	→03/99
			Luc	82059700		04/99→	Bos	97010100		→03/99
			Luc	82063500				84052700	bore ø 20.6 ø 228.6 x 42	→03/99
				92056300	ø 257 x 22 x 49	→03/99		92056400	ø 258 x 10 x 45	→05/99
				92109300	ø 280 x 22 x 49	04/99→		92128700	ø 278 x 10.3 x 45	06/99→
								94023300	ø 228,6 x 52	→03/99
1.6 16V	09/96→12/01	480400 66 / 90	Luc	2154601	[–] 21546 17.5	→03/99	Luc	2154501	[–] 21545 15.6	04/99→
			Luc	2346302	[–] 23463 16.6	04/99→	Luc	82063100		04/99→
			Luc	82051700		→03/99	Ben	91052700	ø 228.6 x 42	→03/99
			Luc	82059700		04/99→	Bos	97010100		→03/99
			Luc	82063500				84052700	bore ø 20.6 ø 228.6 x 42	→03/99
				92056300	ø 257 x 22 x 49			92056400	ø 258 x 10 x 45	→04/99
								92128700	ø 278 x 10.3 x 45	04/99→
								94023300	ø 228,6 x 52	→03/99
1.8	06/96→05/99	480500 96 / 131	Luc	2154601	[–] 21546 17.5	→03/99	Luc	2154501	[–] 21545 15.6	04/99→
			Luc	2346302	[–] 23463 16.6	04/99→	Luc	82063100		04/99→
			Luc	82051700		→03/99	Ben	91052700	ø 228.6 x 42	→03/99
			Luc	82059700		04/99→	Bos	97010100		→03/99
			Luc	82063500				84052700	bore ø 20.6 ø 228.6 x 42	→03/99
				92056300	ø 257 x 22 x 49	→03/99		92056400	ø 258 x 10 x 45	
				92109300	ø 280 x 22 x 49	04/99→		94023300	ø 228,6 x 52	→03/99

		kW / hp										
PRIMERA (P11) 06/96→12/01												
		480600	Luc		2346302	[–] 23463 16.6		Luc		2154501	[–] 21545 15.6	
1.8 16V	08/99→12/01	84 / 114	Luc		82059700			Luc		82063100		
			Luc		82063500					92056400	ø 258 x 10 x 45	→04/01
					92109300	ø 280 x 22 x 49				92128700	ø 278 x 10.3 x 45	04/01→
		480700	Luc		2154601	[–] 21546 17.5	→03/99	Luc		2154501	[–] 21545 15.6	
2.0 16V	09/96→12/01	85 / 115										
2.0 16V	09/96→12/01	96 / 131	Luc		2346302	[–] 23463 16.6	04/99→	Luc		82063100		
			Luc		82051700		→03/99			92056400	ø 258 x 10 x 45	→04/99
			Luc		82059700		04/99→			92128700	ø 278 x 10.3 x 45	04/99→
			Luc		82063500							
					92056300	ø 257 x 22 x 49						
		480800	Ate		2316001	[–] 23160 17.3	06/99→	Luc		2154501	[–] 21545 15.6	
2.0 16V	09/96→12/01	110 / 150	Luc		2346302	[–] 23463 16.6	→05/99	Luc		82063100		
			Luc		82059700		→05/99			92056400	ø 258 x 10 x 45	→04/99
			Ate		82032000		06/99→			92128700	ø 278 x 10.3 x 45	04/99→
			Ate		82062900		06/99→					
			Luc		82063500		→06/99					
					92109300	ø 280 x 22 x 49	06/99→					
		480900	Ate		2316001	[–] 23160 17.3	⊕ man.	Luc		2154501	[–] 21545 15.6	
2.0 16V	08/99→12/01	103 / 140	Luc		2346302	[–] 23463 16.6	⊕ autom.	Luc		82063100		
			Luc		82059700		⊕ autom.			92128700	ø 278 x 10.3 x 45	
			Ate		82032000		⊕ man.					
			Ate		82062900		⊕ man.					
			Luc		82063500							
					92109300	ø 280 x 22 x 49						
		481000	Luc		2154601	[–] 21546 17.5	→03/99	Luc		2154501	[–] 21545 15.6	04/99→
2.0 TD	09/96→12/01	66 / 90	Luc		2346302	[–] 23463 16.6	04/99→	Luc		82063100		04/99→
			Luc		82051700		→03/99	Ben		91052700	ø 228.6 x 42	→03/99
			Luc		82059700		04/99→	Bos		97010100		→03/99
			Luc		82063500					84052700	bore ø 20.6 ø 228.6 x 42	→03/99
					92056300	ø 257 x 22 x 49	→03/99			92056400	ø 258 x 10 x 45	→04/99
					92109300	ø 280 x 22 x 49	04/99→			92128700	ø 278 x 10.3 x 45	04/99→
										94023300	ø 228,6 x 52	→03/99
PRIMERA (P12) 01/02→												
		481100	Luc		2309501	[–] 23095 17		Ate		2348202	[–] 23482 16.8	
1.6	01/02→	80 / 109										
1.6	03/02→	78 / 106										
1.8	03/02→	85 / 115	Luc		2309401	[+] 23094 17		Ate		82032300		
1.9 dCi	08/02→	85 / 116										
1.9 dCi	04/03→	88 / 120	Luc		82061200			Ate		82062900		
2.0	03/02→	103 / 140										
2.2 dCi	04/03→	102 / 139										
2.2 Di	03/02→	93 / 126	Luc		82063500					92125703	ø 278 x 10 x 45	
2.5	01/02→	125 / 170										
				PRO	92109403	ø 280 x 28 x 49						
PRIMERA Break (WP11) 06/96→12/01 → PRIMERA Traveller (WP11), Page 763												
PRIMERA Estate (WP12) 01/02→												
		481200	Luc		2309501	[–] 23095 17		Ate		2348202	[–] 23482 16.8	
1.6 Visia	01/02→	80 / 109										

PRIMERA Estate (WP12) 01/02→

1.8	03/02→	85 / 115	Luc		2309401	[+] 23094 17			Ate		82032300		
1.9 dCi	08/02→	85 / 116											
1.9 dCi	04/03→	88 / 120											
2.0	03/02→	103 / 140	Luc		82061200				Ate		82062900		
2.2 dCi	04/03→	102 / 139											
2.2 Di	03/02→	93 / 126	Luc		82063500					PRO	92125703	ø 278 x 10 x 45	
2.5	01/02→	125 / 170		PRO	92109403	ø 280 x 28 x 49							

PRIMERA Hatchback (P11) 09/96→07/02

		481300	Luc		2154601	[–] 21546 17.5	→03/99		Luc		2154501	[–] 21545 15.6	04/99→
1.6 16V	09/96→07/02	66 / 90	Luc		2346302	[–] 23463 16.6	→04/99		Luc		82063100		04/99→
			Luc		82051700		→03/99		Ben		91052700	ø 228.6 x 42	→03/99
			Luc		82059700		04/99→		Bos		97010100		→03/99
			Luc		82063500						84052700	bore ø 20.6 ø 228.6 x 42	→03/99
					92056300	ø 257 x 22 x 49					92056400	ø 258 x 10 x 45	→04/99
											92128700	ø 278 x 10.3 x 45	04/99→
											94023300	ø 228,6 x 52	→03/99
		481400	Luc		2154601	[–] 21546 17.5	→03/99		Luc		2154501	[–] 21545 15.6	04/99→
1.6 16V	09/96→07/02	73 / 99	Luc		2346302	[–] 23463 16.6	04/99→		Luc		82063100		04/99→
			Luc		82051700		→03/99		Ben		91052700	ø 228.6 x 42	→03/99
			Luc		82059700		04/99→		Bos		97010100		→03/99
			Luc		82063500						84052700	bore ø 20.6 ø 228.6 x 42	→03/99
					92056300	ø 257 x 22 x 49	→03/99				92056400	ø 258 x 10 x 45	→04/99
					92109300	ø 280 x 22 x 49	04/99→				92128700	ø 278 x 10.3 x 45	04/99→
											94023300	ø 228,6 x 52	→03/99
		481500	Luc		2346302	[–] 23463 16.6			Luc		2154501	[–] 21545 15.6	
1.6 16V	09/00→07/02	78 / 106	Luc		82059700				Luc		82063100		
1.8 16V	08/99→07/02	84 / 114	Luc		82063500						92056400	ø 258 x 10 x 45	→04/01
					92109300	ø 280 x 22 x 49					92128700	ø 278 x 10.3 x 45	04/01→
		481600	Luc		2154601	[–] 21546 17.5	→03/98		Luc		2154501	[–] 21545 15.6	
2.0 16V	09/96→07/02	85 / 115	Luc		2346302	[–] 23463 16.6	04/98→		Luc		82063100		
2.0 16V	09/96→07/02	96 / 131	Luc		82051700		→03/98				92056400	ø 258 x 10 x 45	→04/99
			Luc		82059700		04/98→				92128700	ø 278 x 10.3 x 45	04/99→
			Luc		82063500								
					92056300	ø 257 x 22 x 49							
		481700	Ate		2316001	[–] 23160 17.3	06/99→		Luc		2154501	[–] 21545 15.6	
2.0 16V	09/96→07/02	110 / 150	Luc		2346302	[–] 23463 16.6	→05/99		Luc		82063100		
			Luc		82059700		→05/99				92056400	ø 258 x 10 x 45	→04/99
			Ate		82032000		06/99→				92128700	ø 278 x 10.3 x 45	04/99→
			Ate		82062900		06/99→						
			Luc		82063500		→06/99						
					92109300	ø 280 x 22 x 49	06/99→						
		481800	Ate		2316001	[–] 23160 17.3	⊕ man.		Luc		2154501	[–] 21545 15.6	
2.0 16V	08/99→07/02	103 / 140	Luc		2346302	[–] 23463 16.6	⊕ autom.		Luc		82063100		

N - P

PRIMERA Hatchback (P11) 09/96→07/02

481800													
2.0 16V	08/99→07/02	103 / 140	Luc		82059700		⊕ autom.			92056400	ø 258 x 10 x 45	→04/01
			Ate		82032000		⊕ man.			92128700	ø 278 x 10.3 x 45	04/01→
			Ate		82062900		⊕ man.					
			Luc		82063500							
481900													
2.0 TD	09/96→07/02	66 / 90	Luc		2154601	[–] 21546 17.5	→03/99	Luc		2154501	[–] 21545 15.6	04/99→
			Luc		2346302	[–] 23463 16.6	04/99→	Luc		82063100		04/99→
			Luc		82051700		→03/99	Ben		91052700	ø 228.6 x 42	→03/99
			Luc		82059700		04/99→	Bos		97010100		→03/99
			Luc		82063500					84052700	bore ø 20.6 ø 228.6 x 42	→03/99
					92056300	ø 257 x 22 x 49	→05/99			92056400	ø 258 x 10 x 45	→04/99
					92109300	ø 280 x 22 x 49	06/99→			92128700	ø 278 x 10.3 x 45	04/99→
										94023300	ø 228,6 x 52	→03/99

PRIMERA Hatchback (P12) 01/02→

482000													
1.6	07/02→	78 / 106	Luc		2309501	[–] 23095 17		Ate		2348202	[–] 23482 16.8		
1.6	07/02→	80 / 109											
1.8	07/02→	85 / 115	Luc		2309401	[+] 23094 17		Ate		82032300			
1.9 dCi	08/02→	85 / 116											
1.9 dCi	04/03→	88 / 120	Luc		82061200			Ate		82062900			
2.0	07/02→	103 / 140											
2.2 dCi	04/03→	102 / 139	Luc		82063500				PRO	92125703	ø 278 x 10 x 45		
2.2 Di	07/02→	93 / 126		PRO	92109403	ø 280 x 28 x 49							
2.5	01/02→	125 / 170											

PRIMERA Kombi (WP12) 01/02→ → PRIMERA Estate (WP12), Page 761

PRIMERA Traveller (WP11) 06/96→12/01

482100													
1.6 16V	04/98→12/01	66 / 90	Luc		2346302	[–] 23463 16.6		Luc		2154501	[–] 21545 15.6		
1.6 16V	04/98→12/01	73 / 99											
2.0 16V	06/96→12/01	85 / 115	Luc		82059700			Luc		82063100			
2.0 TD	04/98→12/01	66 / 90											
			Luc		82063500					92056400	ø 258 x 10 x 45	→04/99	
					92109300	ø 280 x 22 x 49				92128700	ø 278 x 10.3 x 45	04/99→	
482200													
1.6 16V	04/98→12/01	80 / 109	Luc		2154601	[–] 21546 17.5	→03/99	Luc		2154501	[–] 21545 15.6	04/99→	
			Luc		2346302	[–] 23463 16.6	04/99→	Luc		82063100		04/99→	
			Luc		82051700		→03/99	Ben		91052700	ø 228.6 x 42	→03/99	
			Luc		82059700		04/99→	Bos		97010100		→03/99	
			Luc		82063500					84052700	bore ø 20.6 ø 228.6 x 42	→03/99	
					92056300	ø 257 x 22 x 49	→03/99			92056400	ø 258 x 10 x 45	→05/99	
					92109300	ø 280 x 22 x 49	04/99→			92128700	ø 278 x 10.3 x 45	06/99→	
										94023300	ø 228,6 x 52	→03/99	
482300			Ate		2316001	[–] 23160 17.3	⊕ man.	Luc		2154501	[–] 21545 15.6		
1.8 16V	06/96→05/99	96 / 131	Luc		2346302	[–] 23463 16.6	⊕ autom.	Luc		82063100			
			Luc		82059700		⊕ autom.			92056400	ø 258 x 10 x 45		
			Ate		82032000		⊕ man.						
			Ate		82062900		⊕ man.						
			Luc		82063500								
482400			Luc		2346302	[–] 23463 16.6		Luc		2154501	[–] 21545 15.6		
1.8 16V	08/99→12/01	84 / 114	Luc		82059700			Luc		82063100			
			Luc		82063500					92128700	ø 278 x 10.3 x 45		

N - P

		kW / hp									
PRIMERA Traveller (WP11) 06/96→12/01											
1.8 16V	08/99→12/01	482400 84 / 114		92109300	ø 280 x 22 x 49						
2.0 16V	04/98→12/01	482500 96 / 131	Ate	2316001	[–] 23160 17.3	07/99→	Luc	2154501	[–] 21545 15.6	
			Luc	2346302	[–] 23463 16.6	→06/99	Luc	82063100		
			Luc	82059700		→06/99		92056400	ø 258 x 10 x 45	→04/99
			Ate	82032000		07/99→		92128700	ø 278 x 10.3 x 45	04/99→
			Ate	82062900		07/99→				
			Luc	82063500		→06/99				
				92109300	ø 280 x 22 x 49					
2.0 16V	08/99→12/01	482600 103 / 140	Ate	2316001	[–] 23160 17.3	⊕ man.	Luc	2154501	[–] 21545 15.6	
			Luc	2346302	[–] 23463 16.6	⊕ autom.	Luc	82063100		
			Luc	82059700		⊕ autom.		92128700	ø 278 x 10.3 x 45	
			Ate	82032000		⊕ man.				
			Ate	82062900		⊕ man.				
			Luc	82063500						
				92109300	ø 280 x 22 x 49					
PRIMERA Traveller (WP12) 01/02→ → PRIMERA Estate (WP12), Page 761											
PULSAR I Hatchback (N15) 07/95→07/00 → ALMERA I Hatchback (N15), Page 743											
PULSAR I Saloon (N15) 07/95→07/00 → ALMERA I (N15), Page 742											
PULSAR I Saloon (N15) 09/95→07/00											
1.6	09/95→07/00	482700 86 / 117	Ake	2300401	[+] 23004 15.5						
PULSAR I Stufenheck (N15) 07/95→07/00 → ALMERA I (N15), Page 742											
PULSAR I Stufenheck (N15) 09/95→07/00 → PULSAR I Saloon (N15), Page 764											
PULSAR VI Hatchback (N15) 07/95→07/00 → ALMERA I Hatchback (N15), Page 743											
PULSAR VI Saloon (N15) 09/95→07/00 → PULSAR I Saloon (N15), Page 764											
PULSAR VI Stufenheck (N15) 09/95→07/00 → PULSAR I Saloon (N15), Page 764											
PULSAR VII Hatchback (N16) 01/00→ → ALMERA II Hatchback (N16), Page 744											
PULSAR VII Saloon (N16) 06/00→ → ALMERA II (N16), Page 743											
PULSAR VII Stufenheck (N16) 06/00→ → ALMERA II (N16), Page 743											
QASHQAI / QASHQAI +2 (J10, JJ10) 02/07→											
1.5 dCi	02/07→	482800 78 / 106	Ake	2463201	[o] 24632 17		Ake	2387101	[+] 23871 13.8	
1.5 dCi	07/08→	76 / 103								
1.5 dCi	11/10→	81 / 110	Ake	82507800			Ake	82508000		
1.6	02/07→	81 / 110								
1.6	02/07→	84 / 114		92167400	ø 296 x 26 x 43.9	5 seats SWB		92167500	ø 291 x 9 x 62.3	5 seats SWB
1.6	11/10→	86 / 117								
1.6 dCi	10/11→	96 / 130		92222000	ø 320 x 28 x 44	7 seats LWB		92167503	ø 291 x 9 x 62.3	5 seats SWB
2.0	02/07→	104 / 141								
			PRO	92167403	ø 296 x 26 x 43.9	5 seats SWB		92144000	ø 292 x 16 x 62	7 seats LWB
			PRO	92222003	ø 320 x 28 x 44	7 seats LWB	PRO	92144003	ø 292 x 16 x 62	7 seats LWB
								91068200	ø 172 x 32	
								97036900		
1.6 dCi All-wheel Drive	10/11→	482900 96 / 130	Ake	2463201	[o] 24632 17	5 seats SWB	Ake	2387101	[+] 23871 13.8	
2.0 All-wheel Drive	02/07→	104 / 141	Sum	2369801	[+] 23698 16	7 seats LWB	Ake	82508000		
			Ake	82507800				92167500	ø 291 x 9 x 62.3	5 seats SWB
				92167400	ø 296 x 26 x 43.9	5 seats SWB	PRO	92167503	ø 291 x 9 x 62.3	5 seats SWB
				92222000	ø 320 x 28 x 44	7 seats LWB		92144000	ø 292 x 16 x 62	7 seats LWB
			PRO	92167403	ø 296 x 26 x 43.9	5 seats SWB	PRO	92144003	ø 292 x 16 x 62	7 seats LWB

		kW / hp											
QASHQAI / QASHQAI +2 (J10, JJ10) 02/07→													
		482900		PRO	92222003	ø 320 x 28 x 44	7 seats LWB			91068200	ø 172 x 32	
1.6 dCi All-wheel Drive	10/11→	96 / 130											
2.0 All-wheel Drive	02/07→	104 / 141								97036900		
		483000	Ake		2463201	[o] 24632 17	→2013-09	Ake		2387101	[+] 23871 13.8	
2.0	02/07→	102 / 139			92167400	ø 296 x 26 x 43.9	→2013-01			92167500	ø 291 x 9 x 62.3	
2.0 All-wheel Drive	02/07→	102 / 139		PRO	92167403	ø 296 x 26 x 43.9	→2013-01		PRO	92167503	ø 291 x 9 x 62.3	
		483100	Ake		2463201	[o] 24632 17	5 seats SWB	Ake		2387101	[+] 23871 13.8	
2.0 dCi	02/07→	110 / 150					7 seats LWB →01/10					
2.0 dCi All-wheel Drive	02/07→	110 / 150	Sum		2369801	[+] 23698 16	02/10→ 7 seats LWB	Ake		82508000		
			Ake		82507800					92167500	ø 291 x 9 x 62.3	5 seats SWB
					92167400	ø 296 x 26 x 43.9	5 seats SWB		PRO	92167503	ø 291 x 9 x 62.3	5 seats SWB
					92222000	ø 320 x 28 x 44	7 seats LWB			92144000	ø 292 x 16 x 62	7 seats LWB
				PRO	92167403	ø 296 x 26 x 43.9	5 seats SWB		PRO	92144003	ø 292 x 16 x 62	7 seats LWB
				PRO	92222003	ø 320 x 28 x 44	7 seats LWB			91068200	ø 172 x 32	
										97036900		
QASHQAI 02/14→													
		483200	Ake		2520201	[+] 25202 16.8		Ake		2387101	[+] 23871 13.8	
1.6 dCi	02/14→	96 / 131								92144000	ø 292 x 16 x 62	
									PRO	92144003	ø 292 x 16 x 62	
										91068200	ø 172 x 32	
		483300	Sum		2369803	[+] 23698 17		Ake		2387101	[+] 23871 13.8	
1.6 dCi 4x4	02/14→	96 / 131	Sum		82507500					92144000	ø 292 x 16 x 62	
					92222000	ø 320 x 28 x 44			PRO	92144003	ø 292 x 16 x 62	
				PRO	92222003	ø 320 x 28 x 44				91068200	ø 172 x 32	
QUEST (E52) 11/10→ → ELGRAND (E52), Page 748													
QUEST (V42) 05/03→													
		483400	Nis		2342001	[+] 23420 16.5		Ake		2487101	[+] 24871 13.8	
3.5	05/03→	176 / 239										
RASHEEN 08/94→06/00													
		483500	Ake		2300401	[+] 23004 15.5		Sum		2173401	[+] 21734 14	
1.5 4WD	08/94→06/00	77 / 105										
ROGUE (T32) 12/13→12/13 → X-TRAIL (T32), Page 770													
SABRE I Stufenheck (N15) 09/95→07/00 → PULSAR I Saloon (N15), Page 764													
SENTRA (B16) 08/09→													
		483600	Sum		2156101	[+] 21561 17						
2.0 Flex	08/09→	105 / 143										
SENTRA 01/00→08/06													
		483700	Ake		2152601	[+] 21526 17						
1.8	01/00→08/06	88 / 120										
1.8	01/00→08/06	93 / 126										
		483800	Sum		2156101	[+] 21561 17						
2.0	01/00→	107 / 145										
SENTRA Saloon 01/00→09/03 → SUNNY Saloon, Page 766													
SENTRA Stufenheck 01/00→09/03 → SUNNY Saloon, Page 766													
SENTRA três volumes 01/00→09/03 → SUNNY Saloon, Page 766													
SERENA (C23M) 11/92→09/01													
		483900	Luc		2148101	[–] 21481 15.7	cal. (2 pist.) Ø 257 mm	Luc		91039500	ø 254 x 57	
1.6	10/94→08/00	75 / 102										
1.6 16V	02/93→09/01	71 / 97	Ake		2109902	[+] 21099 17	cal. (1 pist.) Ø 250 mm			97007200		
2.0 16V	11/92→09/01	93 / 126										
2.0 D	11/92→09/01	49 / 67	Ake		82027400		cal. (1 pist.) Ø 250 mm			94022000	ø 254,0 x 67	
2.3 D	01/95→09/01	55 / 75										
2.4	07/94→08/00	93 / 126	Luc		82062800		cal. (2 pist.) Ø 257 mm					
					92074800	ø 257 x 26 x 52.2	cal. (2 pist.)					

		kW / hp									
SERENA (C23M) 11/92→09/01											
		483900									
1.6	10/94→08/00	75 / 102		92129800	ø 250 x 22 x 50.3	cal. (1 pist.)					
1.6 16V	02/93→09/01	71 / 97									
2.0 16V	11/92→09/01	93 / 126									
2.0 D	11/92→09/01	49 / 67									
2.3 D	01/95→09/01	55 / 75									
2.4	07/94→08/00	93 / 126									
SERENA (C24) 06/99→											
		484000	Nis	2342001	[+] 23420 16.5		Luc	91039500	ø 254 x 57		
2.0 SGX	09/00→	107 / 145									
2.0 SGX 4x4	09/00→	107 / 145						94022000	ø 254,0 x 67		
2.5 DCi SGX	06/99→	110 / 150									
2.5 DCi SGX 4x4	06/99→	110 / 150									
SERENA (C25) 04/05→											
		484100	Tok	2422701	[+] 24227 16.5		Ake	2387101	[+] 23871 13.8		
2.0	04/05→	108 / 147									
2.0 4x4	04/05→	108 / 147									
2.5	02/06→	118 / 160									
2.5 4x4	02/06→	118 / 160									
SILVIA Coupe (S14) 10/93→12/99 → 200 SX (S14), Page 742											
SKYLINE (R34) 06/98→07/00											
		484200	Sum	2308601	[+] 23086 17	Sumitomo					
2.5 4x4 (ENR34)	06/98→07/00	147 / 200									
SKYLINE Coupe (R34) 06/98→07/00											
		484300	Sum	2308601	[+] 23086 17	Sumitomo					
2.5	06/98→07/00	147 / 200									
2.5 4x4	06/98→07/00	147 / 200									
SUNNY III Break (Y10) 06/91→03/00 → SUNNY III Traveller (Y10), Page 766											
SUNNY III Traveller (Y10) 06/91→03/00											
		484400	Ake	2171602	[+] 21716 15.9			91040400	ø 228.6 x 41		
1.6	07/95→03/00	75 / 102									
1.6 i	06/91→03/00	66 / 90		82516800			Man	97003400			
1.6 i 16V 4x4	10/92→03/00	75 / 102									
2.0 D	06/91→03/00	55 / 75		92063200	ø 240 x 18 x 45.4			94029900	ø 228,5 x 54.5		
SUNNY Box (Y10) 11/90→03/00											
		484500	Ake	2171602	[+] 21716 15.9			91040400	ø 228.6 x 41		
1.6 i 16V	10/92→03/00	66 / 90									
1.7 D	11/90→03/00	40 / 54		82516800			Man	97003400			
				92063200	ø 240 x 18 x 45.4			94029900	ø 228,5 x 54.5		
SUNNY Coupe 04/00→09/03											
		484600	Ake	2464701	[+] 24647 15.4						
1.8	04/00→09/03	85 / 116									
SUNNY Hatchback 04/00→09/03											
		484700	Ake	2464701	[+] 24647 15.4						
1.5	04/00→08/03	77 / 105									
1.8	04/00→09/03	85 / 116									
SUNNY Kasten (Y10) 11/90→03/00 → SUNNY Box (Y10), Page 766											
SUNNY Mk III Estate (Y10) 06/91→03/00 → SUNNY III Traveller (Y10), Page 766											
SUNNY Mk III Traveller (Y10) 06/91→03/00 → SUNNY III Traveller (Y10), Page 766											
SUNNY Saloon 01/00→09/03											
		484800	Ake	2464701	[+] 24647 15.4						
1.6	04/00→09/03	75 / 102									
1.8	04/00→09/03	85 / 116									
2.0	01/00→05/02	110 / 150									
SUNNY Schrägheck 04/00→09/03 → SUNNY Hatchback, Page 766											
SUNNY Stufenheck 01/00→09/03 → SUNNY Saloon, Page 766											
TEANA I (J31) 10/03→06/08											
		484900	Sum	2156201	[+] 21562 17		Ake	2387101	[+] 23871 13.8		
2.0	10/03→06/08	103 / 140									
2.3	10/03→06/08	127 / 173					Ake	82508000			
3.5	10/03→06/08	170 / 231									
TEANA II (J32) 07/08→											
		485000	Sum	2156201	[+] 21562 17		Ake	2387101	[+] 23871 13.8	→06/10	
2.3	07/08→	127 / 173									
2.5	07/08→	134 / 182					Ake	2487101	[+] 24871 13.8	07/10→	
3.5	07/08→	183 / 249									
								91074600	ø 170 x 40		
TERRANO II (R20) 02/93→06/03											
		485100	Luc	2148101	[–] 21481 15.7			91055800	ø 254 x 57	→09/99	
2.4 4WD	05/96→	87 / 118									
2.4 4WD	05/96→01/02	85 / 116	Luc	82062800				91065100	ø 280 x 65	10/99→	
2.7 TDi 4WD	05/96→	92 / 125									

N - P

30 kW / hp

TERRANO II (R20) 02/93→06/03

		485100			92059000	ø 277 x 26 x 39.2				97007200		→09/99
2.4 4WD	05/96→	87 / 118		PRO	92059003	ø 277 x 26 x 39.2				97012200		10/99→
2.4 4WD	05/96→01/02	85 / 116								84055800	bore ø 25.4 ø 254 x 57	→09/99
2.7 TDi 4WD	05/96→	92 / 125						Luc		84055802	bore ø 23.8 ø 254 x 57	⊕ 3-door →09/99
								Bos		84065100	bore ø 23.8 ø 280 x 65	10/99→
										94022100	ø 254,0 x 65	→09/99
		485200	Luc		2148101	[–] 21481 15.7				91055800	ø 254 x 57	→09/99
2.7 TD 4WD	02/93→01/02	74 / 101	Luc		82062800					91065100	ø 280 x 65	10/99→
					92059000	ø 277 x 26 x 39.2				97007200		→09/99
				PRO	92059003	ø 277 x 26 x 39.2				97012200		10/99→
										84055800	bore ø 25.4 ø 254 x 57	→09/99
								Bos		84065100	bore ø 23.8 ø 280 x 65	10/99→
										94022100	ø 254,0 x 65	→09/99
		485300	Luc		2148101	[–] 21481 15.7				91065100	ø 280 x 65	
3.0 Di 4WD	05/02→	113 / 154	Luc		82062800					97012200		
					92059000	ø 277 x 26 x 39.2		Bos		84065100	bore ø 23.8 ø 280 x 65	
				PRO	92059003	ø 277 x 26 x 39.2						
		485400	Luc		2148101	[–] 21481 15.7				91055800	ø 254 x 57	→09/99
3.0 DiTD 4WD	10/97→06/03	125 / 170	Luc		82062800					91065100	ø 280 x 65	10/99→
3.5 4WD	10/94→06/03	177 / 241			92059000	ø 277 x 26 x 39.2				97007200		→09/99
				PRO	92059003	ø 277 x 26 x 39.2				97012200		10/99→
										84055800	bore ø 25.4 ø 254 x 57	→09/99
										94022100	ø 254,0 x 65	→09/99

TERRANO Mk II (R20) 02/93→06/03 → TERRANO II (R20), Page 766

TERRANO Van (R20) 06/98→

		485500	Luc		2148101	[–] 21481 15.7				91055800	ø 254 x 57	→09/99
2.7 TDi 4WD	06/98→	92 / 125	Luc		82062800					91065100	ø 280 x 65	10/99→
					92059000	ø 277 x 26 x 39.2				97007200		→09/99
				PRO	92059003	ø 277 x 26 x 39.2				97012200		10/99→
										84055800	bore ø 25.4 ø 254 x 57	→09/99
										94022100	ø 254,0 x 65	→09/99
		485600	Luc		2148101	[–] 21481 15.7				91065100	ø 280 x 65	
3.0 Di 4WD	04/03→	113 / 154	Luc		82062800					97012200		
					92059000	ø 277 x 26 x 39.2						
				PRO	92059003	ø 277 x 26 x 39.2						

TIIDA Hatchback (C11X) 09/07→

		485700	Sum		2156201	[+] 21562 17	⊕ EU-made	Ake		2387101	[+] 23871 13.8		
1.5 dCi	09/07→	78 / 106											
1.6	09/07→	81 / 110	Sum		2468201	[+] 24682 14.2	⊕ J-made	Ake		82507600			
1.8	09/07→	93 / 126			82513800			Lkh		91062600	ø 203.2 x 36.5		
										97031100			
										94026800	ø 203,0 x 50.5		

N - P

		kW / hp											
TIIDA Hatchback (C11X) 09/07→													
		485800	Ake		**2387101**	[+] 23871 13.8		Ake		**2387101**	[+] 23871 13.8	
1.8	09/07→	91 / 124										
1.8	09/09→	140 / 190										
TIIDA Hatchback 05/04→02/07													
		485900	Sum		**2156201**	[+] 21562 17						
1.5	05/04→02/07	80 / 109										
1.5 4x4	05/04→02/07	80 / 109										
1.8	05/04→02/07	81 / 110										
1.8 4x4	05/04→02/07	81 / 110										
		486000	Sum		**2156201**	[+] 21562 17		Ake		**2387101**	[+] 23871 13.8	
1.8	05/04→02/07	93 / 126										
			Sum		**2468201**	[+] 24682 14.2						
			Ake		**2472401**	[+] 24724 14						
TIIDA Saloon (SC11X) 09/06→12/12													
		486100	Sum		**2156201**	[+] 21562 17	⊕ EU-made	Ake		**2387101**	[+] 23871 13.8	
1.5 dCi	01/07→	76 / 103										
1.5 dCi	09/07→	78 / 106	Sum		**2468201**	[+] 24682 14.2	⊕ J-made	Ake		**82507600**		
					82513800			Lkh		**91062600**	ø 203.2 x 36.5	
										97031100		
										94026800	ø 203,0 x 50.5	
		486200	Sum		**2156201**	[+] 21562 17	⊕ HU-made	Ake		**2387101**	[+] 23871 13.8	
1.6	09/07→	81 / 110	Sum		**2468201**	[+] 24682 14.2	⊕ J-made	Ake		**82507600**		
					82513800			Lkh		**91062600**	ø 203.2 x 36.5	
										97031100		
										94026800	ø 203,0 x 50.5	
		486300	Sum		**2156201**	[+] 21562 17		Ake		**2387101**	[+] 23871 13.8	
1.6	09/13→	78 / 106										
		486400	Sum		**2156201**	[+] 21562 17	2007-02→	Ake		**2387101**	[+] 23871 13.8	2007-02→ →2007-06
1.8	09/06→12/12	91 / 124										
										91068200	ø 172 x 32	
		486500	Sum		**2156201**	[+] 21562 17	⊕ EU-made ⊖ AUS	Ake		**2387101**	[+] 23871 13.8	
1.8	09/07→	93 / 126	Sum		**2468201**	[+] 24682 14.2	⊕ J-made	Ake		**82507600**		
					82513800			Lkh		**91062600**	ø 203.2 x 36.5	
										97031100		
										94026800	ø 203,0 x 50.5	
		486600	Sum		**2156201**	[+] 21562 17		Ake		**2387101**	[+] 23871 13.8	2010-05→
1.8	09/09→	140 / 190								**91068200**	ø 172 x 32	
TIIDA Schrägheck (C11X) 09/07→ → TIIDA Hatchback (C11X), Page 767													
TIIDA Schrägheck 05/04→02/07 → TIIDA Hatchback, Page 768													
TIIDA Stufenheck (SC11X) 09/06→12/12 → TIIDA Saloon (SC11X), Page 768													
TITAN 10/03→													
		486700	Bos		**2410601**	[+] 24106 18		Bos		**2411102**	[+] 24111 17.1	
5.6	10/03→	227 / 309										
5.6 4x4	10/03→	227 / 309										
5.6 Flex-Fuel 4WD	01/04→12/07	224 / 305										
		486800	Bos		**2410601**	[+] 24106 18		Kel		**2425801**	[+] 24258 17.9	
5.6	09/06→	236 / 321										
5.6 4WD	09/06→	236 / 321										
TRADE Box 06/96→10/01													
		486900	Ben		**2998401**	[+] 29984 17				**91044300**	ø 254 x 57	
3.0 TDiC	06/96→10/01	78 / 106		PRO	**92174603**	ø 263 x 24 x 53						
TRADE Box Body / Estate 05/97→12/00													
		487000	Ben		**2970602**	[–] 29706 17						
75	05/97→12/00	55 / 75	Ben		**2998401**	[+] 29984 17						

30 kW / hp													
TRADE Bus 06/96→10/01													
487100		Ben		**2998401**	[+] 29984 17					**91044300**	ø 254 x 57	
2.3 D	06/96→10/01	55 / 75											
487200		Ben		**2998401**	[+] 29984 17					**91044300**	ø 254 x 57	
3.0 TDiC	06/96→10/01	78 / 106											
			PRO	**92174603**	ø 263 x 24 x 53								
TRADE Kasten/Kombi 05/97→12/00 → TRADE Box Body / Estate, Page 768													
TRADE Kasten 06/96→10/01 → TRADE Box, Page 768													
TRADE Platform/Chassis 06/96→10/01													
487300			PRO	**92174603**	ø 263 x 24 x 53								
2.3 D	06/96→10/01	55 / 75											
3.0 TDiC	06/96→10/01	78 / 106											
TRADE Platform/Chassis 11/98→09/04													
487400		Ben		**2998401**	[+] 29984 17					**91044300**	ø 254 x 57	
2.3 D	11/98→04/01	55 / 75											
2.7 TD	11/98→09/04	73 / 99											
3.0 TD	11/98→09/04	81 / 110											
TRADE Pritsche/Fahrgestell 06/96→10/01 → TRADE Platform/Chassis, Page 769													
TRADE Pritsche/Fahrgestell 11/98→09/04 → TRADE Platform/Chassis, Page 769													
TSUBAME III Combi (Y10) 06/91→03/00 → SUNNY III Traveller (Y10), Page 766													
TSUBAME III Estate (Y10) 06/91→03/00 → SUNNY III Traveller (Y10), Page 766													
TSUBAME III Ranchera familiar (Y10) 06/91→03/00 → SUNNY III Traveller (Y10), Page 766													
TSUBAME III Traveller (Y10) 06/91→03/00 → SUNNY III Traveller (Y10), Page 766													
TSURU Sedán 01/00→09/03 → SUNNY Saloon, Page 766													
TSURU Stufenheck 01/00→09/03 → SUNNY Saloon, Page 766													
VANETTE CARGO Box (HC 23) 09/94→													
487500		Luc		**2148101**	[–] 21481 15.7	Lucas				**91055800**	ø 254 x 57	
1.6	09/94→05/01	75 / 102											
1.6 i	01/95→	71 / 97	Ake		**2109902**	[+] 21099 17	Akebono			**97007200**		
2.0 D	01/95→	49 / 67											
2.3 D	01/95→	55 / 75	Luc		**82062800**					**94023400**	ø 254,0 x 67	
					92074800	ø 257 x 26 x 52.2							
					92129800	ø 250 x 22 x 50.3							
VANETTE CARGO Bus (HC 23) 09/94→													
487600		Luc		**2148101**	[–] 21481 15.7	Lucas				**91055800**	ø 254 x 57	
1.6	09/94→05/01	75 / 102											
1.6 i	01/96→	72 / 98	Ake		**2109902**	[+] 21099 17	Akebono			**97007200**		
2.0 D	01/96→	49 / 67											
2.3 D	01/96→	55 / 75	Luc		**82062800**					**94023400**	ø 254,0 x 67	
					92074800	ø 257 x 26 x 52.2							
					92129800	ø 250 x 22 x 50.3							
VANETTE CARGO Kasten (HC 23) 09/94→ → VANETTE CARGO Box (HC 23), Page 769													
VERSA NOTE 06/13→ → NOTE, Page 754													
XTERRA (N50) 01/05→													
487700		Sum		**2369801**	[+] 23698 16	⊕ rim size 17" Ø 320 mm				**91076600**	ø 295 x 57	
2.8 4x4	01/05→	103 / 140	Tok		**2422701**	[+] 24227 16.5	⊕ rim size 16" Ø 296 mm					
			Sum		**82507900**		⊕ rim size 17" Ø 320 mm					
					92164400	ø 320 x 28 x 37.9	⊕ rim size 17"					
					92199600	ø 296 x 28 x 38	⊕ rim size 16"					
				PRO	**92164403**	ø 320 x 28 x 37.9	⊕ rim size 17"					
				PRO	**92199603**	ø 296 x 28 x 38	⊕ rim size 16"					
XTERRA (WD22) 05/99→12/04													
487800		Ake		**2397001**	[+] 23970 17							
2.8 TD AWD	05/01→12/04	101 / 137											
3.3	05/99→12/04	125 / 170											
3.3 AWD	05/99→12/04	154 / 209											
X-TRAIL (T30) 06/01→													
487900		Nis		**2342001**	[+] 23420 16.5			Ake		**2387101**	[+] 23871 13.8	
2.0	07/01→	103 / 140											
2.0	09/01→	110 / 150	Nis		**82507400**			Ake		**82508000**		
2.0 4x4	06/01→	206 / 280											
2.0 4x4	07/01→	103 / 140											

NISSAN

NISSAN

		kW / hp											
X-TRAIL (T30) 06/01→													
2.0 4x4	09/01→	110 / 150		PRO	92109403	ø 280 x 28 x 49			92144000	ø 292 x 16 x 62			
2.2 dCi	12/03→	100 / 136											
2.2 DCi	10/04→	84 / 114						PRO	92144003	ø 292 x 16 x 62			
2.2 dCi 4x4	12/03→	100 / 136											
2.2 DCi FWD	06/01→09/03	84 / 114							91062700	ø 172 x 22			
2.2 Di 4x4	07/01→	84 / 114											
2.5 4x4	09/01→02/07	134 / 182							97035200				
2.5 4x4	09/02→	121 / 165											
2.5 4x4	11/02→	132 / 179											
2.5 4x4	09/04→12/05	131 / 178											
2.5 FWD	06/01→01/08	131 / 178											
X-TRAIL (T31) 03/07→													
		488000	Ake		2463201	[o] 24632 17		Ake		2387101	[+] 23871 13.8		
2.0	06/07→	101 / 137											
2.0	06/07→	104 / 141	Ake		82507800			Ake		82508000			
2.0	06/08→	103 / 140											
2.0 dCi	06/07→	110 / 150			92167400	ø 296 x 26 x 43.9			92144000	ø 292 x 16 x 62			
2.0 dCi	06/07→	127 / 173											
2.0 dCi 4x4	10/09→	130 / 177		PRO	92167403	ø 296 x 26 x 43.9			92144003	ø 292 x 16 x 62			
2.0 dCi FWD	06/07→	110 / 150											
2.0 FWD	03/07→	104 / 141							91068200	ø 172 x 32			
2.0 FWD	06/08→	103 / 140											
2.5 4x4	06/07→	124 / 161							97036900				
2.5 4x4	01/12→	122 / 166											
		488100	Ake		2463201	[o] 24632 17		Ake		2387101	[+] 23871 13.8		
2.5	09/09→	104 / 141											
2.5	09/11→	124 / 169			92167400	ø 296 x 26 x 43.9			92144000	ø 292 x 16 x 62			
2.5 4x4	09/09→	104 / 141											
				PRO	92167403	ø 296 x 26 x 43.9		PRO	92144003	ø 292 x 16 x 62			
									91068200	ø 172 x 32			
X-TRAIL (T32) 12/13→12/13													
		488200	Ake		2463201	[o] 24632 17	→2010-03	Ake		2387101	[+] 23871 13.8		
2.5 4x4	12/13→12/13	127 / 173			92167400	ø 296 x 26 x 43.9	→2013-10		92144000	ø 292 x 16 x 62	→2012-12		
				PRO	92167403	ø 296 x 26 x 43.9	→2013-10	PRO	92144003	ø 292 x 16 x 62	→2012-12		
									91068200	ø 172 x 32			

NISSAN (DONGFENG)

NISSAN (DONGFENG)

		kW / hp											
TEANA (J31) 04/06→06/08													
		488300	Sum		2156101	[+] 21561 17		Ake		2387101	[+] 23871 13.8		
2.0	04/06→06/08	100 / 134											
2.3	04/06→06/08	127 / 173											
3.5	04/06→06/08	180 / 241											
TEANA (J32) 06/08→													
		488400	Sum		2156101	[+] 21561 17		Ake		2387101	[+] 23871 13.8		
2.0	11/10→	104 / 141											
2.5	11/10→	136 / 185											
3.5	06/08→11/10	185 / 252											
3.5	11/10→	185 / 252											
TIIDA Hatchback (C12) 05/11→													
		488500	Ake		2472401	[+] 24724 14							
1.6	05/11→	93 / 126											
1.6 GTS	06/11→	140 / 190											
TIIDA QIDA Hatchback (C11) 07/05→													
		488600	Ake		2472401	[+] 24724 14		Ake		2387101	[+] 23871 13.8		
1.6	07/05→	80 / 107											
TIIDA QIDA Schrägheck (C11) 07/05→ → TIIDA QIDA Hatchback (C11), Page 770													
TIIDA Schrägheck (C12) 05/11→ → TIIDA Hatchback (C12), Page 770													
TIIDA YIDA Saloon (C11) 04/05→													
		488700	Ake		2472401	[+] 24724 14		Ake		2387101	[+] 23871 13.8		
1.6	04/05→	80 / 107											
				PRO	92111703	ø 246.5 x 9 x 35							
TIIDA YIDA Stufenheck (C11) 04/05→ → TIIDA YIDA Saloon (C11), Page 770													

		kW / hp									
ADAM 10/12→											
		488800	Bos		2509501	[+] 25095 17			91065300	ø 203.2 x 38	8" -brake
1.0	07/13→	50 / 68									
1.2	07/13→	69 / 94		PRO	92145703	ø 257 x 22 x 40.6			91065400	ø 228.6 x 42	9" -brake
1.4 LPG	07/13→	64 / 87						Lkh	84065300	bore ø 19 ø 203.2 x 38	8" -brake
									84065400	bore ø 20.6 ø 228.6 x 42	9" -brake
									94027200	ø 228,3 x 47.5	9" -brake
									94027600	ø 203,2 x 48	8" -brake
		488900	Bos		2509501	[+] 25095 17	14" -brake		91065300	ø 203.2 x 38	8" -brake →E6999999 ⊕ rear drum brake
1.0	07/14→	66 / 90									
1.0	07/14→	85 / 115	Ate		82032000		15" -brake		91065400	ø 228.6 x 42	9" -brake →E6999999 ⊕ rear drum brake
				PRO	92145703	ø 257 x 22 x 40.6	14" -brake	Lkh	84065300	bore ø 19 ø 203.2 x 38	8" -brake →E6999999 ⊕ rear drum brake
				PRO	92145803	ø 284 x 22 x 43.2	15" -brake		84065402	bore ø 19 ø 228.6 x 42	9" -brake →E6999999 ⊕ rear drum brake
									94027200	ø 228,3 x 47.5	9" -brake ⊕ rear drum brake
									94027600	ø 203,2 x 48	8" -brake ⊕ rear drum brake
		489000	Bos		2509501	[+] 25095 17			91065300	ø 203.2 x 38	8" -brake
1.2	10/12→	51 / 69									
1.4	10/12→	64 / 87		PRO	92145703	ø 257 x 22 x 40.6			91065400	ø 228.6 x 42	9" -brake
1.4	10/12→	74 / 101			TPM0008				TPM0008		
AGILA (A) (H00) 09/00→12/07											
		489100	Bos		2360501	[+] 23605 15.5			91058000	ø 180 x 26	→2G999999
1.0	08/03→12/07	44 / 60									
1.0 12V	09/00→12/07	43 / 58	Bos		82063800				91065200	ø 200 x 29	3G000001→
1.2 16V	09/00→12/07	55 / 75									
1.2 16V Twinport	07/04→12/07	59 / 80	Bos		82510100				97032300		→2G999999
1.3 CDTI	08/03→12/07	51 / 70		PRO	92110803	ø 246.5 x 12 x 44.2			97032500		3G000001→
				PRO	92135303	ø 253 x 17 x 49.1	⊕ ABS		84058000	bore ø 15.9 ø 180 x 26	→2G999999
									84065200	bore ø 15.9 ø 200 x 29	3G000001→
									94023900	ø 180,0 x 34.5	→2G999999
									94024000	ø 180,0 x 34.5	⊖ ABS →2G999999
									94027800	ø 200 x 38	4G000001→
									94033200	ø 200 x 38	3G000001→ →3G999999
AGILA (B) (H08) 04/08→											
		489200	Luc		2397302	[+] 23973 17.3		Bos	91064500	ø 200 x 32	
1.0	04/08→	48 / 65									
1.2	04/08→	63 / 86	Luc		82075700				97032300		
1.3 CDTI	04/08→	55 / 75		PRO	92148903	ø 252 x 20 x 40		Bos	84064502	bore ø 19 ø 200 x 32	
		489300	Luc		2397302	[+] 23973 17.3		Bos	91064500	ø 200 x 32	
1.0	07/11→	50 / 68									
1.0 LPG	01/10→	48 / 65	Luc		82075700				97032300		
1.2	11/10→	69 / 94									
1.2 LPG	04/08→	63 / 86		PRO	92148903	ø 252 x 20 x 40					
AMPERA 11/11→											
		489400			2503401	[+] 25034 18.8			2509602	[+] 25096 16.2	
EV 150	11/11→	111 / 151									
				epad	2503481	[+] 25034 18.8					
ANTARA 05/06→											
		489500	Man		2451001	[+] 24510 16.9		Man	2449801	[+] 24498 15.4	
2.0 CDTI	05/06→	110 / 150									
2.0 CDTI	03/07→	93 / 127	Man		82077300			Man	82077200		
2.0 CDTI	09/08→	93 / 127									
2.0 CDTI 4x4	05/06→	110 / 150			92165400	ø 296 x 29 x 51.6			92165500	ø 303 x 20 x 71.7	
2.2 CDTi	12/10→	120 / 163									
2.2 CDTi 4x4	12/10→	120 / 163							91067100	ø 188.4 x 26	
2.2 CDTi 4x4	12/10→	135 / 184									
2.4	05/06→	104 / 141									
2.4	09/08→	103 / 140									
2.4	12/10→	123 / 167									

		kW / hp											
ANTARA 05/06→													
2.4 4x4	01/07→	103 / 140								**97038500**			
2.4 4x4	12/10→	123 / 167											
2.4 LPG	10/08→	103 / 140											
2.4 LPG 4x4	10/08→	103 / 140											
3.0	11/10→	190 / 258											
3.2 V6	03/07→	167 / 227											
ARENA Box (TB, TF) 03/98→08/01													
		489600	Ben		**2092602**	[+] 20926 18.5		Luc		**91015700**	ø 254 x 56	⊖ ABS	
1.9 D	03/98→08/01	44 / 60		PRO	**92017203**	ø 252 x 24 x 53.5				**91049700**	ø 254 x 57	⊕ ABS	
								Ben		**91064300**	ø 255 x 46	→04/01	
										83015702	bore ø 25.4 ø 254 x 56	⊖ ABS	
										84015700	bore ø 25.4 ø 254 x 56	⊖ ABS	
										94030800	ø 255 x 56	⊖ ABS	
		489700	Ben		**2092602**	[+] 20926 18.5				**91049700**	ø 254 x 57		
2.5 D	03/98→08/01	55 / 75		PRO	**92017203**	ø 252 x 24 x 53.5							
ARENA Box 01/97→12/01													
		489800	Ben		**2092602**	[+] 20926 18.5				**91049700**	ø 254 x 57	⊕ ABS	
1.9 D	01/97→12/01	44 / 60		PRO	**92017203**	ø 252 x 24 x 53.5		Ben		**91049900**	ø 255 x 45	⊖ ABS	
										94030800	ø 255 x 56	⊖ ABS	
		489900	Ben		**2092602**	[+] 20926 18.5				**91049700**	ø 254 x 57		
2.5 D	01/97→12/01	55 / 75		PRO	**92017203**	ø 252 x 24 x 53.5							
ARENA Bus 01/97→12/01													
		490000	Ben		**2092602**	[+] 20926 18.5				**91049700**	ø 254 x 57	⊕ ABS	
1.9 D	01/97→12/01	44 / 60		PRO	**92017203**	ø 252 x 24 x 53.5		Ben		**91049900**	ø 255 x 45	⊖ ABS	
										94030800	ø 255 x 56	⊖ ABS	
		490100	Ben		**2092602**	[+] 20926 18.5				**91049700**	ø 254 x 57		
2.5 D	01/97→12/01	55 / 75		PRO	**92017203**	ø 252 x 24 x 53.5							
ARENA Combi (THB) 03/98→08/01													
		490200	Ben		**2092602**	[+] 20926 18.5		Luc		**91015700**	ø 254 x 56	⊖ ABS	
1.9 D	03/98→08/01	44 / 60		PRO	**92017203**	ø 252 x 24 x 53.5				**91049700**	ø 254 x 57	⊕ ABS	
								Ben		**91064300**	ø 255 x 46	→04/01	
										83015702	bore ø 25.4 ø 254 x 56	⊖ ABS	
										84015700	bore ø 25.4 ø 254 x 56	⊖ ABS	
										94030800	ø 255 x 56	⊖ ABS	
		490300	Ben		**2092602**	[+] 20926 18.5				**91049700**	ø 254 x 57		
2.5 D	03/98→08/01	55 / 75		PRO	**92017203**	ø 252 x 24 x 53.5							
ARENA Fourgon (TB, TF) 03/98→08/01 → ARENA Box (TB, TF), Page 772													
ARENA Kasten (TB, TF) 03/98→08/01 → ARENA Box (TB, TF), Page 772													
ARENA Kasten 01/97→12/01 → ARENA Box, Page 772													
ASTRA A+ Stufenheck (L69) 02/07→ → ASTRA H Saloon (L69), Page 790													
ASTRA F Cabriolet (53_B) 05/93→03/01 → ASTRA F Convertible (53_B), Page 774													
ASTRA F CLASSIC Estate 01/98→01/05													
		490400	Ate		**2054701**	[o] 20547 16.8		Ate		**2114001**	[–] 21140 15.7	⊖ CN ⊕ rear disc brake	
1.4 i	01/98→01/05	44 / 60											
1.6 i	01/98→01/05	55 / 75	Ate		**82030600**			Luc		**91049000**	ø 230 x 42	⊕ rear drum brake	
			Ate		**82062900**					**97011800**		⊕ rear drum brake	
				PRO	**92020903**	ø 236 x 12.5 x 41				**92057000**	ø 260 x 10 x 69.2	⊖ CN ⊕ rear disc brake	

		kW / hp											
ASTRA F CLASSIC Estate 01/98→01/05													
1.4 i	01/98→01/05	490400 44 / 60		PRO	92039203	ø 256 x 24 x 41				94020300	ø 230,0 x 50.2	⊕ rear drum brake
1.6 i	01/98→01/05	55 / 75										
1.6 i 16V	01/98→01/05	490500 74 / 101	Ate		2186201	[o] 21862 18.3		Ate		2114001	[–] 21140 15.7	⊖ CN ⊕ rear disc brake
			Ate		82030600			Luc		91049000	ø 230 x 42	⊕ rear drum brake
			Ate		82062900					97011800		⊕ rear drum brake
				PRO	92039203	ø 256 x 24 x 41				92057000	ø 260 x 10 x 69.2	⊖ CN ⊕ rear disc brake
										94020300	ø 230,0 x 50.2	⊕ rear drum brake
ASTRA F CLASSIC Hatchback 01/98→08/02													
1.4 i	01/98→08/02	490600 44 / 60	Ate		2054701	[o] 20547 16.8		Ate		2114001	[–] 21140 15.7	⊖ CN ⊕ rear disc brake
			Ate		82030600					91044900	ø 200 x 45	⊕ rear drum brake
			Ate		82062900					97008300		⊕ rear drum brake
				PRO	92020903	ø 236 x 12.5 x 41				92057000	ø 260 x 10 x 69.2	⊖ CN ⊕ rear disc brake
				PRO	92039203	ø 256 x 24 x 41				94008600	ø 200,0 x 52.5	⊕ rear drum brake
1.6 i	01/98→08/02	490700 55 / 75	Ate		2054701	[o] 20547 16.8		Ate		2114001	[–] 21140 15.7	⊖ CN ⊕ rear disc brake
			Ate		82030600					91044900	ø 200 x 45	⊖ IND ⊕ rear drum brake
			Ate		82062900			Luc		91049000	ø 230 x 42	⊕ IND ⊕ rear drum brake
				PRO	92020903	ø 236 x 12.5 x 41				97008300		⊖ IND ⊕ rear drum brake
				PRO	92039203	ø 256 x 24 x 41				97011800		⊕ IND ⊕ rear drum brake
										92057000	ø 260 x 10 x 69.2	⊖ CN ⊕ rear disc brake
										94008600	ø 200,0 x 52.5	⊖ IND ⊕ rear drum brake
										94020300	ø 230,0 x 50.2	⊕ IND ⊕ rear drum brake
1.6 i 16V	01/98→08/02	490800 74 / 101	Ate		2186201	[o] 21862 18.3		Ate		2114001	[–] 21140 15.7	⊖ CN ⊕ rear disc brake
			Ate		82030600					91044900	ø 200 x 45	⊕ rear drum brake
			Ate		82062900					97008300		⊕ rear drum brake
				PRO	92039203	ø 256 x 24 x 41				84044900	bore ø 19 ø 200 x 45	⊕ rear drum brake
										92057000	ø 260 x 10 x 69.2	⊖ CN ⊕ rear disc brake
										94008600	ø 200,0 x 52.5	⊕ rear drum brake
ASTRA F CLASSIC Kombi 01/98→01/05 → ASTRA F CLASSIC Estate, Page 772													
ASTRA F CLASSIC Saloon 01/98→08/02													
1.4 i	01/98→08/02	490900 44 / 60	Ate		2054701	[o] 20547 16.8		Ate		2114001	[–] 21140 15.7	⊖ CN ⊕ rear disc brake
			Ate		82030600					91044900	ø 200 x 45	⊕ rear drum brake
			Ate		82062900					97008300		⊕ rear drum brake
				PRO	92020903	ø 236 x 12.5 x 41				92057000	ø 260 x 10 x 69.2	⊖ CN ⊕ rear disc brake
				PRO	92039203	ø 256 x 24 x 41				94008600	ø 200,0 x 52.5	⊕ rear drum brake
1.6 i	01/98→08/02	491000 55 / 75	Ate		2054701	[o] 20547 16.8		Ate		2114001	[–] 21140 15.7	⊖ CN ⊕ rear disc brake
			Ate		82030600					91044900	ø 200 x 45	⊖ IND ⊕ rear drum brake
			Ate		82062900			Luc		91049000	ø 230 x 42	⊕ IND ⊕ rear drum brake
				PRO	92020903	ø 236 x 12.5 x 41				97008300		⊖ IND ⊕ rear drum brake
				PRO	92039203	ø 256 x 24 x 41				97011800		⊕ IND ⊕ rear drum brake
										92057000	ø 260 x 10 x 69.2	⊖ CN ⊕ rear disc brake
										94008600	ø 200,0 x 52.5	⊖ IND ⊕ rear drum brake

N - P

		kW / hp											
ASTRA F CLASSIC Saloon 01/98→08/02													
1.6 i	01/98→08/02	491000 55 / 75								94020300	ø 230,0 x 50.2	⊕ IND ⊕ rear drum brake
1.6 i 16V	01/98→08/02	491100 74 / 101	Ate		2186201	[o] 21862 18.3		Ate		2114001	[–] 21140 15.7	⊖ CN ⊕ rear disc brake
			Ate		82030600					91044900	ø 200 x 45	⊕ rear drum brake
			Ate		82062900					97008300		⊕ rear drum brake
				PRO	92039203	ø 256 x 24 x 41				84044900	bore ø 19 ø 200 x 45	⊕ rear drum brake
										92057000	ø 260 x 10 x 69.2	⊖ CN ⊕ rear disc brake
										94008600	ø 200,0 x 52.5	⊕ rear drum brake
ASTRA F CLASSIC Schrägheck 01/98→08/02 → ASTRA F CLASSIC Hatchback, Page 773													
ASTRA F CLASSIC Stufenheck 01/98→08/02 → ASTRA F CLASSIC Saloon, Page 773													
ASTRA F Convertible (53_B) 05/93→03/01													
1.4 i 16V 1.4 Si	01/96→03/01 05/93→03/01	491200 66 / 90 60 / 82	Ate		2054701	[o] 20547 16.8		Ate		2114001	[–] 21140 15.7	⊖ CN ⊕ rear disc brake
					98015800	L685				91044900	ø 200 x 45	⊕ rear drum brake
			Ate		82030600					97008300		⊕ rear drum brake
			Ate		82062900					84044900	bore ø 19 ø 200 x 45	⊕ rear drum brake
				PRO	92029603	ø 236 x 20 x 41				92057000	ø 260 x 10 x 69.2	⊖ CN ⊕ rear disc brake
										94008600	ø 200,0 x 52.5	⊕ rear drum brake
1.6 i	01/96→03/01	491300 55 / 75	Ate		2054701	[o] 20547 16.8		Ate		2114001	[–] 21140 15.7	⊖ CN ⊕ rear disc brake
					98015800	L685				91044900	ø 200 x 45	⊖ IND ⊕ rear drum brake
			Ate		82030600			Luc		91049000	ø 230 x 42	⊕ IND ⊕ rear drum brake
			Ate		82062900					97008300		⊖ IND ⊕ rear drum brake
				PRO	92029603	ø 236 x 20 x 41				97011800		⊕ IND ⊕ rear drum brake
										84044900	bore ø 19 ø 200 x 45	⊖ IND ⊕ rear drum brake
										92057000	ø 260 x 10 x 69.2	⊖ CN ⊕ rear disc brake
										94008600	ø 200,0 x 52.5	⊖ IND ⊕ rear drum brake
										94020300	ø 230,0 x 50.2	⊕ IND ⊕ rear drum brake
1.8 i 16V	11/94→03/01	491400 85 / 116	Ate		2186201	[o] 21862 18.3		Ate		2114001	[–] 21140 15.7	⊕ rear disc brake
			Ate		82030600			Ate		82025700		
			Ate		82062900			Ate		82062900		
				PRO	92039203	ø 256 x 24 x 41				91044900	ø 200 x 45	⊕ rear drum brake
										97008300		⊕ rear drum brake
										84044900	bore ø 19 ø 200 x 45	⊕ rear drum brake
										92057000	ø 260 x 10 x 69.2	⊕ rear disc brake
										94008600	ø 200,0 x 52.5	⊕ rear drum brake
										91018400	ø 160 x 24.5	⊕ rear disc brake
ASTRA F Van (55_) 10/91→01/99													
1.4 i 1.7 D 1.7 TD	10/91→01/99 07/92→01/99 08/94→01/99	491500 44 / 60 44 / 60 50 / 68	Ate		2054701	[o] 20547 16.8	⊖ reinf.brake	Ate		2114001	[–] 21140 15.7	⊖ CN ⊕ rear disc brake
			Ate		2186201	[o] 21862 18.3	⊕ reinf.brake			91044900	ø 200 x 45	→S-999999 ⊕ rear drum brake
			Ate		82030600			Luc		91049000	ø 230 x 42	T-000001→ ⊕ rear drum brake
			Ate		82062900					97008300		→S-999999 ⊕ rear drum brake
				PRO	92029603	ø 236 x 20 x 41	⊖ reinf.brake			97011800		T-000001→ ⊕ rear drum brake
				PRO	92039203	ø 256 x 24 x 41	⊕ reinf.brake			83049001	bore ø 19 ø 230 x 42	T2500001→ ⊕ rear drum brake

N - P

30 kW / hp

ASTRA F Van (55_) 10/91→01/99

491500													
1.4 i	10/91→01/99	44 / 60								84049001	bore ø 19 ø 230 x 42	T2500001→ ⊕ rear drum brake
1.7 D	07/92→01/99	44 / 60								84044900	bore ø 19 ø 200 x 45	→S-999999 ⊕ rear drum brake
1.7 TD	08/94→01/99	50 / 68								92057000	ø 260 x 10 x 69.2	⊖ CN ⊕ rear disc brake
										94008600	ø 200,0 x 52.5	→S-999999 ⊕ rear drum brake
										94020300	ø 230,0 x 50.2	T-000001→ ⊕ rear drum brake

ASTRA G Box (F70) 01/99→04/05

491600			Ate	2306302	[+] 23063 17.3		Bos	2325803	[+] 23258 16.9	⊕ rear disc brake
1.6	01/99→09/00	55 / 75		98023300	L720	⊕ on-board comp.	Luc	2341703	[+] 23417 15.2	⊕ rear disc brake
1.6	09/00→04/05	62 / 84	Ate	82062900			Luc	82060100		⊕ rear disc brake
1.7 TD	01/99→04/05	50 / 68		92091803	ø 256 x 24 x 41		Luc	82063300		⊕ rear disc brake
				TPM0007			Bos	82063700		⊕ rear disc brake
							Luc	91049000	ø 230 x 42	⊕ rear drum brake →12999999 →15999999 →16999999 →18999999 →1G
								91060100	ø 230 x 42	22000001→ 25000001→ 26000001→ 28000001→ 4G000001→
								97011800		⊕ rear drum brake
								92092003	ø 240 x 10 x 42.7	⊕ rear disc brake
								TPM0008		
								94020300	ø 230,0 x 50.2	⊕ rear drum brake
491700			Ate	2306302	[+] 23063 17.3		Luc	2341702	[–] 23417 15.2	⊕ rear disc brake
1.6	10/04→04/05	76 / 103		92091803	ø 256 x 24 x 41		Luc	2341781	[–] 23417 15.2	⊕ rear disc brake
							Luc	2341703	[+] 23417 15.2	⊕ rear disc brake
								91060100	ø 230 x 42	22000001, 25000001→ 26000001, 28000001→ 4G000001→ ⊕ rear drum brake
								92092003	ø 240 x 10 x 42.7	⊕ rear disc brake
								94031500	ø 230 x 50	42000001, 45000001→ 46000001, 48000001→ 4G000001→ ⊕ rear drum brake
491800			Ate	2306302	[+] 23063 17.3	⊖ ABS →09/01	Bos	2325803	[+] 23258 16.9	⊕ rear disc brake
2.0 DI	01/99→04/05	60 / 82	Ate	2383201	[+] 23832 19.6	⊕ ABS →09/01 09/01→	Luc	2341703	[+] 23417 15.2	⊕ rear disc brake
			Ate	2383281	[+] 23832 19.6	⊕ ABS →09/01 09/01→	Luc	82060100		⊕ rear disc brake
				98023300	L720	⊕ on-board comp. ⊖ ABS	Luc	82063300		⊕ rear disc brake
				98029800	L750	⊖ elec. damp. susp.	Bos	82063700		⊕ rear disc brake
				98031400	L287	⊕ elec. damp. susp.	Luc	91049000	ø 230 x 42	⊕ rear drum brake →12999999 →15999999 →16999999 →18999999 →1G
			Ate	82032000		⊕ ABS →09/01 09/01→		91060100	ø 230 x 42	22000001→ 25000001→ 26000001→ 28000001→ 4G000001→
			Ate	82062900		⊖ ABS →09/01		92092103	ø 264 x 10 x 42	⊕ ABS ⊕ rear disc brake →09/01 09/01→
				92091803	ø 256 x 24 x 41	⊖ ABS →09/01		TPM0008		
				92091903	ø 280 x 25 x 42	⊕ ABS →09/01 09/01→		94020300	ø 230,0 x 50.2	⊕ rear drum brake
				TPM0007						

ASTRA G Cabriolet (F67) 03/01→10/05 → ASTRA G Convertible (F67), Page 775

ASTRA G Convertible (F67) 03/01→10/05

491900			Ate	2306302	[+] 23063 17.3		Bos	2325803	[+] 23258 16.9				
1.6	01/03→10/05	76 / 103		98023300	L720	⊕ on-board comp.	Luc	2341703	[+] 23417 15.2				
1.6 16V	03/01→10/05	74 / 101	Ate	82062900			Luc	82060100					
							Luc	82063300					

N - P

		kW / hp											
ASTRA G Convertible (F67) 03/01→10/05													
		491900		PRO	92091803	ø 256 x 24 x 41		Bos		82063700			
1.6	01/03→10/05	76 / 103											
1.6 16V	03/01→10/05	74 / 101			TPM0007				PRO	92092003	ø 240 x 10 x 42.7		
										TPM0008			
		492000	Ate		2383201	[+] 23832 19.6		Bos		2325803	[+] 23258 16.9		
1.8 16V	03/01→10/05	92 / 125											
			Ate	epad	2383281	[+] 23832 19.6		Luc		2341703	[+] 23417 15.2		
					98029800	L750	⊖ elec. damp. susp.	Luc		82060100			
					98031400	L287	⊕ elec. damp. susp.	Luc		82063300		⊕ rear disc brake	
			Ate		82032000			Bos		82063700			
			Ate		82062900				PRO	92092103	ø 264 x 10 x 42		
				PRO	92091903	ø 280 x 25 x 42				TPM0008			
					TPM0007								
		492100	Ate		2311701	[+] 23117 20.2		Luc		2341703	[+] 23417 15.2		
2.0 16V Turbo	11/02→10/05	147 / 200	Ate		82032000			Luc		82060100			
			Ate		82062900			Luc		82063300			
				PRO	92110903	ø 308 x 25 x 42			PRO	92092103	ø 264 x 10 x 42		
					TPM0007					TPM0008			
		492200	Ate		2311701	[+] 23117 20.2		Bos		2325803	[+] 23258 16.9		
2.0 OPC	03/02→10/05	141 / 192	Ate		82032000			Luc		2341703	[+] 23417 15.2		
			Ate		82062900			Luc		82060100			
				PRO	92110903	ø 308 x 25 x 42		Luc		82063300			
					TPM0007			Bos		82063700			
									PRO	92092103	ø 264 x 10 x 42		
										TPM0008			
		492300	Ate		2383201	[+] 23832 19.6		Bos		2325803	[+] 23258 16.9		
2.2 16V	03/01→10/05	108 / 147											
2.2 DTI	09/02→10/05	92 / 125	Ate	epad	2383281	[+] 23832 19.6		Luc		2341703	[+] 23417 15.2		
					98029800	L750	⊖ elec. damp. susp.	Luc		82060100			
					98031400	L287	⊕ elec. damp. susp.	Luc		82063300			
			Ate		82032000			Bos		82063700			
			Ate		82062900				PRO	92092103	ø 264 x 10 x 42		
				PRO	92091903	ø 280 x 25 x 42				TPM0008			
					TPM0007								
ASTRA G Coupe (F07_) 03/00→05/05													
		492400	Ate		2383201	[+] 23832 19.6		Bos		2325803	[+] 23258 16.9		
1.6 16V	03/00→05/05	74 / 101											
1.6 16V	03/00→05/05	76 / 103	Ate	epad	2383281	[+] 23832 19.6		Luc		2341703	[+] 23417 15.2		
1.8 16V	03/00→10/00	85 / 116											
1.8 16V	09/00→05/05	92 / 125			98029800	L750	⊖ elec. damp. susp.	Luc		82060100			
2.2 16V	09/00→05/05	108 / 147											
2.2 DTI	09/02→05/05	92 / 125			98031400	L287	⊕ elec. damp. susp.	Luc		82063300			
			Ate		82032000			Bos		82063700			
				PRO	92091903	ø 280 x 25 x 42			PRO	92092103	ø 264 x 10 x 42		
					TPM0007					TPM0008			
		492500	Ate		2311701	[+] 23117 20.2		Bos		2325803	[+] 23258 16.9		
2.0 16V Turbo	09/00→08/01	140 / 190											
2.0 16V Turbo	08/01→05/05	141 / 192											
2.0 16V Turbo	11/02→05/05	147 / 200											

		kW / hp									
ASTRA G Coupe (F07_) 03/00→05/05											
		492500	Ate		82032000			Luc		2341703	[+] 23417 15.2
2.0 16V Turbo	09/00→08/01	140 / 190		PRO	92091903	ø 280 x 25 x 42		Luc		82060100	
2.0 16V Turbo	08/01→05/05	141 / 192			TPM0007			Luc		82063300	
2.0 16V Turbo	11/02→05/05	147 / 200						Bos		82063700	
									PRO	92092103	ø 264 x 10 x 42
										TPM0008	
ASTRA G Delvan (F70) 01/99→04/05 → ASTRA G Box (F70), Page 775											
ASTRA G Estate (F35_) 02/98→12/09											
		492600	Ate		2306302	[+] 23063 17.3		Bos		2325803	[+] 23258 16.9 ⊕ rear disc brake
1.2 16V	02/98→09/00	48 / 65			98023300	L720	⊕ on-board comp.	Luc		2341703	[+] 23417 15.2 ⊕ rear disc brake
			Ate		82062900			Luc		82060100	⊕ rear disc brake
					92091700	ø 256 x 11 x 41	⊕ rear drum brake	Luc		82063300	⊕ rear disc brake
				PRO	92091803	ø 256 x 24 x 41	⊕ rear disc brake	Bos		82063700	⊕ rear disc brake
					TPM0007			Luc		91049000	ø 230 x 42 ⊕ rear drum brake →12999999 →15999999 →16999999 →18999999 →1G
										91060100	ø 230 x 42 22000001→ 25000001→ 26000001→ 28000001→ 4G000001→
										97011800	⊕ rear drum brake
										83049001	bore ø 19 ø 230 x 42 ⊕ rear drum brake →12999999 →15999999 →16999999 →18999999 →1G
										84049001	bore ø 19 ø 230 x 42 ⊕ rear drum brake →12999999 →15999999 →16999999 →18999999 →1G
									PRO	92092003	ø 240 x 10 x 42.7 ⊕ rear disc brake
										TPM0008	
										94020300	ø 230,0 x 50.2 ⊕ rear drum brake
		492700	Ate		2306302	[+] 23063 17.3		Bos		2325803	[+] 23258 16.9 ⊕ rear disc brake
1.2 16V	09/00→07/04	55 / 75			98023300	L720	⊕ on-board comp.	Luc		2341703	[+] 23417 15.2 ⊕ rear disc brake
			Ate		82062900			Luc		82060100	⊕ rear disc brake
					92091700	ø 256 x 11 x 41	⊕ rear drum brake	Luc		82063300	⊕ rear disc brake
				PRO	92091803	ø 256 x 24 x 41	⊕ rear disc brake	Bos		82063700	⊕ rear disc brake
					TPM0007			Luc		91049000	ø 230 x 42 ⊕ rear drum brake →12999999 →15999999 →16999999 →18999999 →1G
										91060100	ø 230 x 42 22000001→ 25000001→ 26000001→ 28000001→ 4G000001→
										97011800	⊕ rear drum brake
										83049001	bore ø 19 ø 230 x 42 ⊕ rear drum brake
										84049001	bore ø 19 ø 230 x 42 ⊕ rear drum brake →12999999 →15999999 →16999999 →18999999 →1G
									PRO	92092003	ø 240 x 10 x 42.7 ⊕ rear disc brake
										TPM0008	
										94020300	ø 230,0 x 50.2 ⊕ rear drum brake
		492800	Ate		2306302	[+] 23063 17.3		Bos		2325803	[+] 23258 16.9 ⊕ rear disc brake
1.4	09/07→12/09	66 / 90									
1.4 16V	06/98→07/04	66 / 90			98023300	L720	⊕ on-board comp.	Luc		2341703	[+] 23417 15.2 ⊕ rear disc brake
1.6	02/98→09/00	55 / 75									
1.6	09/00→07/04	62 / 84									
1.7 CDTI	04/03→07/09	59 / 80	Ate		82062900			Luc		82060100	⊕ rear disc brake
1.7 DTI 16V	02/00→07/04	55 / 75									
1.7 TD	02/98→08/00	50 / 68		PRO	92091803	ø 256 x 24 x 41		Luc		82063300	⊕ rear disc brake
1.8	02/03→07/04	81 / 110									

ASTRA G Estate (F35_) 02/98→12/09

		kW / hp										
		492800			TPM0007			Bos		82063700		⊕ rear disc brake
1.4	09/07→12/09	66 / 90						Luc		91049000	ø 230 x 42	⊕ rear drum brake →12999999 →15999999 →16999999 →18999999 →1G
1.4 16V	06/98→07/04	66 / 90								91060100	ø 230 x 42	22000001→ 25000001→ 26000001→ 28000001→ 4G000001→
1.6	02/98→09/00	55 / 75								97011800		⊕ rear drum brake
1.6	09/00→07/04	62 / 84								83049001	bore ø 19 ø 230 x 42	⊕ rear drum brake →12999999 →15999999 →16999999 →18999999 →1G
1.7 CDTI	04/03→07/09	59 / 80								84049001	bore ø 19 ø 230 x 42	⊕ rear drum brake →12999999 →15999999 →16999999 →18999999 →1G
1.7 DTI 16V	02/00→07/04	55 / 75							PRO	92092003	ø 240 x 10 x 42.7	⊕ rear disc brake
1.7 TD	02/98→08/00	50 / 68								TPM0008		
1.8	02/03→07/04	81 / 110								94020300	ø 230,0 x 50.2	⊕ rear drum brake
		492900	Ate		2306302	[+] 23063 17.3		Bos		2325803	[+] 23258 16.9	⊕ rear disc brake
1.6	12/02→07/09	76 / 103			98023300	L720	⊕ on-board comp.	Luc		2341703	[+] 23417 15.2	⊕ rear disc brake
1.6 16V	02/98→07/04	74 / 101	Ate		82062900			Luc		82060100		⊕ rear disc brake
				PRO	92091803	ø 256 x 24 x 41		Luc		82063300		⊕ rear disc brake
				PRO	92091903	ø 280 x 25 x 42		Bos		82063700		⊕ rear disc brake
					TPM0007			Luc		91049000	ø 230 x 42	⊕ rear drum brake →12999999 →15999999 →16999999 →18999999 →1G
										91060100	ø 230 x 42	22000001→ 25000001→ 26000001→ 28000001→ 4G000001→
										97011800		⊕ rear drum brake
										83049001	bore ø 19 ø 230 x 42	⊕ rear drum brake →12999999 →15999999 →16999999 →18999999 →1G
										84049001	bore ø 19 ø 230 x 42	⊕ rear drum brake →12999999 →15999999 →16999999 →18999999 →1G
									PRO	92092003	ø 240 x 10 x 42.7	⊕ rear disc brake
										TPM0008		
										94020300	ø 230,0 x 50.2	⊕ rear drum brake
		493000	Ate		2383201	[+] 23832 19.6		Bos		2325803	[+] 23258 16.9	⊕ rear disc brake
1.6 CNG	03/03→07/04	71 / 97	Ate	epad	2383281	[+] 23832 19.6		Luc		2341703	[+] 23417 15.2	⊕ rear disc brake
					98023300	L720	⊕ on-board comp.	Luc		82060100		⊕ rear disc brake
			Ate		82032000			Luc		82063300		⊕ rear disc brake
				PRO	92091903	ø 280 x 25 x 42		Bos		82063700		⊕ rear disc brake
					TPM0007			Luc		91049000	ø 230 x 42	⊕ rear drum brake →12999999 →15999999 →16999999 →18999999 →1G
										91060100	ø 230 x 42	22000001→ 25000001→ 26000001→ 28000001→ 4G000001→
										97011800		⊕ rear drum brake
									PRO	92092103	ø 264 x 10 x 42	⊕ rear disc brake
										TPM0008		
										94020300	ø 230,0 x 50.2	⊕ rear drum brake
		493100	Ate		2306302	[+] 23063 17.3	⊖ ABS	Bos		2325803	[+] 23258 16.9	
1.8 16V	02/98→09/00	85 / 116	Ate		2383201	[+] 23832 19.6	⊕ ABS	Luc		2341703	[+] 23417 15.2	
			Ate	epad	2383281	[+] 23832 19.6	⊕ ABS	Luc		82060100		
					98023300	L720	⊕ on-board comp. ⊖ ABS	Luc		82063300		

30 kW / hp

ASTRA G Estate (F35_) 02/98→12/09

493100													
1.8 16V	02/98→09/00	85 / 116		98029800	L750	⊖ elec. damp. susp.	Bos		82063700				
				98031400	L287	⊕ elec. damp. susp.		PRO	92092103	ø 264 x 10 x 42	⊕ ABS		
			Ate	82032000		⊕ ABS			TPM0008				
			Ate	82062900		⊖ ABS							
			PRO	92091803	ø 256 x 24 x 41	⊖ ABS							
			PRO	92091903	ø 280 x 25 x 42	⊕ ABS							
				TPM0007									
493200			Ate	2306302	[+] 23063 17.3	⊖ ABS →09/01	Bos		2325803	[+] 23258 16.9			
1.8 16V	09/00→07/04	92 / 125											
2.0 DI	02/98→07/04	60 / 82	Ate	2383201	[+] 23832 19.6	⊕ ABS	Luc		2341703	[+] 23417 15.2			
			Ate	2383281	[+] 23832 19.6	⊕ ABS	Luc		82060100				
				98023300	L720	⊕ on-board comp. ⊖ ABS	Luc		82063300				
				98029800	L750	⊖ elec. damp. susp.	Bos		82063700				
				98031400	L287	⊕ elec. damp. susp.		PRO	92092103	ø 264 x 10 x 42	⊕ ABS		
			Ate	82032000		⊕ ABS			TPM0008				
			Ate	82062900		⊖ ABS →09/01							
			PRO	92091803	ø 256 x 24 x 41	⊖ ABS →09/01							
			PRO	92091903	ø 280 x 25 x 42	⊕ ABS							
				TPM0007									
493300			Ate	2383201	[+] 23832 19.6		Bos		2325803	[+] 23258 16.9			
2.0 16V	02/98→07/04	100 / 136											
2.2 16V	03/01→07/04	108 / 147	Ate	2383281	[+] 23832 19.6		Luc		2341703	[+] 23417 15.2			
2.2 DTI	09/02→07/04	92 / 125		98029800	L750	⊖ elec. damp. susp.	Luc		82060100				
				98031400	L287	⊕ elec. damp. susp.	Luc		82063300				
			Ate	82032000			Bos		82063700				
			PRO	92091903	ø 280 x 25 x 42			PRO	92092103	ø 264 x 10 x 42			
				TPM0007					TPM0008				
493400			Ate	2306302	[+] 23063 17.3	⊖ ABS →09/01	Bos		2325803	[+] 23258 16.9			
2.0 DTI 16V	08/99→07/04	74 / 101											
			Ate	2383201	[+] 23832 19.6	⊕ ABS	Luc		2341703	[+] 23417 15.2			
			Ate	2383281	[+] 23832 19.6	⊕ ABS	Luc		82060100				
				98023300	L720	⊕ on-board comp. ⊖ ABS	Luc		82063300				
				98029800	L750	⊖ elec. damp. susp.	Bos		82063700				
				98031400	L287	⊕ elec. damp. susp.		PRO	92092103	ø 264 x 10 x 42			
			Ate	82032000		⊕ ABS			TPM0008				
			Ate	82062900		⊖ ABS →09/01							
			PRO	92091803	ø 256 x 24 x 41	⊖ ABS →09/01							
			PRO	92091903	ø 280 x 25 x 42	⊕ ABS							
				TPM0007									
493500			Ate	2311701	[+] 23117 20.2		Bos		2325803	[+] 23258 16.9			
2.0 OPC	09/02→07/04	141 / 192											
2.0 OPC	11/02→07/04	147 / 200	Ate	82032000			Luc		2341703	[+] 23417 15.2			
			Ate	82062900			Luc		82060100				
			PRO	92110903	ø 308 x 25 x 42		Luc		82063300				

N - P

		kW / hp									
ASTRA G Estate (F35_) 02/98→12/09											
493500				TPM0007			Bos	82063700			
2.0 OPC	09/02→07/04	141 / 192						92092103	ø 264 x 10 x 42	
2.0 OPC	11/02→07/04	147 / 200						TPM0008		
493600			Ate	2383201	[+] 23832 19.6		Luc	2341703	[+] 23417 15.2	
2.2 DTI	09/02→07/04	86 / 117	Ate	2383281	[+] 23832 19.6		Luc	82063300		
			Ate	82032000			Bos	82063700		
			Ate	82062900				92092103	ø 264 x 10 x 42	
				92091903	ø 280 x 25 x 42			TPM0008		
				TPM0007						
ASTRA G Hatchback (F48_, F08_) 02/98→12/09											
493700			Ate	2306302	[+] 23063 17.3		Bos	2325803	[+] 23258 16.9	⊕ rear disc brake
1.2 16V	02/98→09/00	48 / 65		98023300	L720	⊕ on-board comp.	Luc	2341703	[+] 23417 15.2	⊕ rear disc brake
			Ate	82062900			Luc	82060100		⊕ rear disc brake
				92091700	ø 256 x 11 x 41		Luc	82063300		⊕ rear disc brake
				TPM0007			Bos	82063700		⊕ rear disc brake
								91044900	ø 200 x 45	⊕ rear drum brake
								97008300		⊕ rear drum brake
								84044900	bore ø 19 ø 200 x 45	⊕ rear drum brake
								92092003	ø 240 x 10 x 42.7	⊕ rear disc brake
								TPM0008		
								94008600	ø 200,0 x 52.5	⊕ rear drum brake
493800			Ate	2306302	[+] 23063 17.3		Bos	2325803	[+] 23258 16.9	⊕ rear disc brake
1.2 16V	09/00→01/05	55 / 75		98023300	L720	⊕ on-board comp.	Luc	2341703	[+] 23417 15.2	⊕ rear disc brake
			Ate	82062900			Luc	82060100		⊕ rear disc brake
				92091803	ø 256 x 24 x 41		Luc	82063300		⊕ rear disc brake
				TPM0007			Bos	82063700		⊕ rear disc brake
								91044900	ø 200 x 45	⊕ rear drum brake
								97008300		⊕ rear drum brake
								84044900	bore ø 19 ø 200 x 45	⊕ rear disc brake
								92092003	ø 240 x 10 x 42.7	⊕ rear disc brake
								TPM0008		
								94008600	ø 200,0 x 52.5	⊕ rear drum brake
493900			Ate	2306302	[+] 23063 17.3		Bos	2325803	[+] 23258 16.9	⊕ rear disc brake
1.4	09/07→12/09	66 / 90		98023300	L720	⊕ on-board comp.	Luc	2341703	[+] 23417 15.2	⊕ rear disc brake
			Ate	82062900			Luc	82060100		⊕ rear disc brake
				92091803	ø 256 x 24 x 41		Luc	82063300		⊕ rear disc brake
				TPM0007			Bos	82063700		⊕ rear disc brake
							Luc	91049000	ø 230 x 42	⊕ rear drum brake →12999999 →15999999 →16999999 →18999999 →1G
								91060100	ø 230 x 42	22000001→ 25000001→ 26000001→ 28000001→ 4G000001→
								97011800		⊕ rear drum brake

N - P

ASTRA G Hatchback (F48_, F08_) 02/98→12/09

		kW / hp										
1.4	09/07→12/09	493900 66 / 90							84049000	bore ø 19 ø 230 x 42	⊕ rear drum brake →12999999 →15999999 →16999999 →1G
									92092003	ø 240 x 10 x 42.7	⊕ rear disc brake
									TPM0008		
									94020300	ø 230,0 x 50.2	⊕ rear drum brake
1.4 16V	02/98→01/05	494000 66 / 90	Ate		2306302	[+] 23063 17.3		Bos	2325803	[+] 23258 16.9	⊕ rear disc brake
1.6	02/98→09/00	55 / 75			98023300	L720	⊕ on-board comp.	Luc	2341703	[+] 23417 15.2	⊕ rear disc brake
1.6	09/00→01/05	62 / 84	Ate		82062900			Luc	82060100		⊕ rear disc brake
1.6	12/02→12/09	76 / 103		PRO	92091803	ø 256 x 24 x 41		Luc	82063300		⊕ rear disc brake
1.6 16V	02/98→01/05	74 / 101			TPM0007			Bos	82063700		⊕ rear disc brake
1.7 CDTI	04/03→12/09	59 / 80						Luc	91049000	ø 230 x 42	⊕ rear drum brake →12999999 →15999999 →16999999 →18999999 →1G
1.7 DTI 16V	02/00→01/05	55 / 75							91060100	ø 230 x 42	22000001→ 25000001→ 26000001→ 28000001→ 4G000001→
1.7 TD	02/98→08/00	50 / 68							97011800		⊕ rear drum brake
									84049000	bore ø 19 ø 230 x 42	⊕ rear drum brake →12999999 →15999999 →16999999 →18999999 →1G
				PRO					92092003	ø 240 x 10 x 42.7	⊕ rear disc brake
									TPM0008		
									94020300	ø 230,0 x 50.2	⊕ rear drum brake
1.6 LPG	06/02→01/05	494100 74 / 101	Ate		2306302	[+] 23063 17.3		Luc	2341703	[+] 23417 15.2	⊕ rear disc brake
				PRO	92091803	ø 256 x 24 x 41	⊖ ABS	Luc	91049000	ø 230 x 42	⊕ rear drum brake →12999999 →15999999 →16999999 →18999999 →1G
				PRO	92091903	ø 280 x 25 x 42	⊕ ABS		91060100	ø 230 x 42	⊕ rear drum brake 22000001→ 25000001→ 26000001→ 28000001→ 4G000001→
									92092003	ø 240 x 10 x 42.7	⊕ rear disc brake
									94020300	ø 230,0 x 50.2	⊕ rear drum brake
									94022600	ø 230,0 x 49.5	⊕ rear drum brake Steel →32999999 →3H999999
1.8	02/03→01/04	494200 81 / 110	Ate		2306302	[+] 23063 17.3	⊖ ABS	Bos	2325803	[+] 23258 16.9	
			Ate		2383201	[+] 23832 19.6	⊕ ABS	Luc	2341703	[+] 23417 15.2	
			Ate	epad	2383281	[+] 23832 19.6	⊕ ABS	Luc	82060100		
					98023300	L720	⊕ on-board comp.	Luc	82063300		
					98029800	L750	⊖ elec. damp. susp.	Bos	82063700		
					98031400	L287	⊕ elec. damp. susp.		92092103	ø 264 x 10 x 42	⊕ ABS
			Ate		82032000		⊕ ABS		TPM0008		
			Ate		82062900		⊖ ABS				
				PRO	92091803	ø 256 x 24 x 41	⊖ ABS				
				PRO	92091903	ø 280 x 25 x 42	⊕ ABS				
					TPM0007						
1.8 16V	02/98→09/00	494300 85 / 116	Ate		2306302	[+] 23063 17.3	⊖ ABS	Bos	2325803	[+] 23258 16.9	
			Ate		2383201	[+] 23832 19.6	⊕ ABS	Luc	2341703	[+] 23417 15.2	
			Ate	epad	2383281	[+] 23832 19.6	⊕ ABS	Luc	82060100		
					98023300	L720	⊕ on-board comp. ⊖ ABS	Luc	82063300		
					98029800	L750	⊖ elec. damp. susp.	Bos	82063700		

N - P

		kW / hp										
ASTRA G Hatchback (F48_, F08_) 02/98→12/09												
494300												
1.8 16V	02/98→09/00	85 / 116		98031400	L287	⊕ elec. damp. susp.		PRO 92092103	ø 264 x 10 x 42	⊕ ABS
			Ate	82032000		⊕ ABS		TPM0008		
			Ate	82062900		⊖ ABS				
			PRO	92091803	ø 256 x 24 x 41	⊖ ABS				
			PRO	92091903	ø 280 x 25 x 42	⊕ ABS				
				TPM0007						
494400			Ate	2306302	[+] 23063 17.3	⊖ ABS →09/01	Bos	2325803	[+] 23258 16.9	
1.8 16V	09/00→01/05	92 / 125								
2.0 DI	02/98→01/05	60 / 82	Ate	2383201	[+] 23832 19.6	⊕ ABS	Luc	2341703	[+] 23417 15.2	
			Ate epad	2383281	[+] 23832 19.6	⊕ ABS	Luc	82060100		
				98023300	L720	⊕ on-board comp. ⊖ ABS	Luc	82063300		
				98029800	L750	⊖ elec. damp. susp.	Bos	82063700		
				98031400	L287	⊕ elec. damp. susp.		PRO 92092103	ø 264 x 10 x 42	⊕ ABS
			Ate	82032000		⊕ ABS		TPM0008		
			Ate	82062900		⊖ ABS →09/01				
			PRO	92091803	ø 256 x 24 x 41	⊖ ABS →09/01				
			PRO	92091903	ø 280 x 25 x 42	⊕ ABS				
				TPM0007						
494500			Ate	2383201	[+] 23832 19.6		Bos	2325803	[+] 23258 16.9	
2.0 16V	02/98→01/05	100 / 136								
2.2 16V	06/00→01/05	108 / 147								
2.2 DTI	09/02→01/05	92 / 125	Ate epad	2383281	[+] 23832 19.6		Luc	2341703	[+] 23417 15.2	
				98029800	L750	⊖ elec. damp. susp.	Luc	82060100		
				98031400	L287	⊕ elec. damp. susp.	Luc	82063300		
			Ate	82032000			Bos	82063700		
			Ate	82062900				PRO 92092103	ø 264 x 10 x 42	
			PRO	92091903	ø 280 x 25 x 42			TPM0008		
				TPM0007						
494600			Ate	2311701	[+] 23117 20.2		Bos	2325803	[+] 23258 16.9	
2.0 16V OPC	11/99→09/02	118 / 160								
2.0 OPC	09/02→01/05	141 / 192	Ate	82032000			Luc	2341703	[+] 23417 15.2	
2.0 OPC	11/02→01/05	147 / 200	Ate	82062900			Luc	82060100		
			PRO	92110903	ø 308 x 25 x 42		Luc	82063300		
				TPM0007			Bos	82063700		
								PRO 92092103	ø 264 x 10 x 42	
								TPM0008		
494700			Ate	2306302	[+] 23063 17.3	⊖ ABS →09/01	Bos	2325803	[+] 23258 16.9	
2.0 DTI 16V	08/99→01/05	74 / 101								
			Ate	2383201	[+] 23832 19.6	⊕ ABS	Luc	2341703	[+] 23417 15.2	
			Ate epad	2383281	[+] 23832 19.6	⊕ ABS	Luc	82060100		
				98023300	L720	⊕ on-board comp. ⊖ ABS	Luc	82063300		
				98029800	L750	⊖ elec. damp. susp.	Bos	82063700		
				98031400	L287	⊕ elec. damp. susp.		PRO 92092103	ø 264 x 10 x 42	
			Ate	82032000		⊕ ABS		TPM0008		
			Ate	82062900		⊖ ABS →09/01				

		kW / hp									
ASTRA G Hatchback (F48_, F08_) 02/98→12/09											
2.0 DTI 16V	08/99→01/05	494700 74 / 101		PRO 92091803	ø 256 x 24 x 41	⊖ ABS →09/01					
				PRO 92091903	ø 280 x 25 x 42	⊕ ABS					
				TPM0007							
2.2 DTI	09/02→01/05	494800 86 / 117	Ate	2383201	[+] 23832 19.6		Luc	2341703	[+] 23417 15.2		
			Ate	epad 2383281	[+] 23832 19.6		Luc	82063300			
			Ate	82032000			Bos	82063700			
			Ate	82062900				PRO 92092103	ø 264 x 10 x 42		
				PRO 92091903	ø 280 x 25 x 42			TPM0008			
				TPM0007							
ASTRA G Kasten (F70) 01/99→04/05 → ASTRA G Box (F70), Page 775											
ASTRA G Kombi (F35_) 02/98→12/09 → ASTRA G Estate (F35_), Page 777											
ASTRA G Saloon (F69_) 09/98→12/09											
1.2 16V	09/98→09/00	494900 48 / 65	Ate	2306302	[+] 23063 17.3		Bos	2325803	[+] 23258 16.9	⊕ rear disc brake	
				98023300	L720	⊕ on-board comp.	Luc	2341703	[+] 23417 15.2	⊕ rear disc brake	
			Ate	82062900			Luc	82060100		⊕ rear disc brake	
				92091700	ø 256 x 11 x 41		Luc	82063300		⊕ rear disc brake	
				PRO 92091803	ø 256 x 24 x 41		Bos	82063700		⊕ rear disc brake	
				TPM0007				91044900	ø 200 x 45	⊕ rear drum brake	
								97008300		⊕ rear drum brake	
								97011800		⊕ rear drum brake	
								84044900	bore ø 19 ø 200 x 45	⊕ rear drum brake	
								PRO 92092003	ø 240 x 10 x 42.7	⊕ rear disc brake	
								TPM0008			
								94008600	ø 200,0 x 52.5	⊕ rear drum brake	
1.2 16V	09/00→01/05	495000 55 / 75	Ate	2306302	[+] 23063 17.3		Bos	2325803	[+] 23258 16.9	⊕ rear disc brake	
				98023300	L720	⊕ on-board comp.	Luc	2341703	[+] 23417 15.2	⊕ rear disc brake	
			Ate	82062900			Luc	82060100		⊕ rear disc brake	
				PRO 92091803	ø 256 x 24 x 41		Luc	82063300		⊕ rear disc brake	
				TPM0007			Bos	82063700		⊕ rear disc brake	
								91044900	ø 200 x 45	⊕ rear drum brake	
								97008300		⊕ rear drum brake	
								84044900	bore ø 19 ø 200 x 45	⊕ rear drum brake	
								PRO 92092003	ø 240 x 10 x 42.7	⊕ rear disc brake	
								TPM0008			
								94008600	ø 200,0 x 52.5	⊕ rear drum brake	
1.4	09/07→12/09	495100 66 / 90	Ate	2306302	[+] 23063 17.3		Bos	2325803	[+] 23258 16.9	⊕ rear disc brake	
1.4 16V	09/98→01/05	66 / 90									
1.6	09/98→09/00	55 / 75		98023300	L720	⊕ on-board comp.	Luc	2341703	[+] 23417 15.2	⊕ rear disc brake	
1.6	09/00→01/05	62 / 84									
1.6	12/02→12/09	76 / 103	Ate	82062900			Luc	82060100		⊕ rear disc brake	
1.6 16V	09/98→01/05	74 / 101									
1.7 CDTI	04/03→12/09	59 / 80		PRO 92091803	ø 256 x 24 x 41		Luc	82063300		⊕ rear disc brake	
1.7 TD	09/98→08/00	50 / 68		TPM0007			Bos	82063700		⊕ rear disc brake	

ASTRA G Saloon (F69_) 09/98→12/09

		495100							Luc		91049000	ø 230 x 42	⊕ rear drum brake →12999999 →15999999 →16999999 →18999999 →1G
1.4	09/07→12/09	66 / 90									91060100	ø 230 x 42	22000001→ 25000001→ 26000001→ 28000001→ 4G000001→
1.4 16V	09/98→01/05	66 / 90									97011800		⊕ rear drum brake
1.6	09/98→09/00	55 / 75									84049000	bore ø 19 ø 230 x 42	⊕ rear drum brake →12999999 →15999999 →16999999 →18999999 →1G
1.6	09/00→01/05	62 / 84								PRO	92092003	ø 240 x 10 x 42.7	⊕ rear disc brake
1.6	12/02→12/09	76 / 103									TPM0008		
1.6 16V	09/98→01/05	74 / 101									94020300	ø 230,0 x 50.2	⊕ rear drum brake
1.7 CDTI	04/03→12/09	59 / 80											
1.7 TD	09/98→08/00	50 / 68											
		495200	Ate		2306302	[+] 23063 17.3			Luc		2341703	[+] 23417 15.2	⊕ rear disc brake
1.6 LPG	06/02→01/05	74 / 101		PRO	92091803	ø 256 x 24 x 41	⊖ ABS		Luc		91049000	ø 230 x 42	⊕ rear drum brake →12999999 →15999999 →16999999 →18999999 →1G
				PRO	92091903	ø 280 x 25 x 42	⊕ ABS				91060100	ø 230 x 42	⊕ rear drum brake 22000001→ 25000001→ 26000001→ 28000001→ 4G000001→
										PRO	92092003	ø 240 x 10 x 42.7	⊕ rear disc brake
											94020300	ø 230,0 x 50.2	⊕ rear drum brake
											94022600	ø 230,0 x 49.5	⊕ rear drum brake Steel →32999999 →3H999999
		495300	Ate		2306302	[+] 23063 17.3			Bos		2325803	[+] 23258 16.9	⊕ rear disc brake
1.7 DTI 16V	02/00→01/05	55 / 75			98023300	L720	⊕ on-board comp.		Luc		2341703	[+] 23417 15.2	⊕ rear disc brake
			Ate		82062900				Luc		82060100		⊕ rear disc brake
				PRO	92091803	ø 256 x 24 x 41			Luc		82063300		⊕ rear disc brake
					TPM0007				Bos		82063700		⊕ rear disc brake
									Luc		91049000	ø 230 x 42	⊕ rear drum brake →12999999 →15999999 →16999999 →18999999 →1G
											91060100	ø 230 x 42	22000001→ 25000001→ 26000001→ 28000001→ 4G000001→
											97011800		⊕ rear drum brake
											83049001	bore ø 19 ø 230 x 42	⊕ rear drum brake →12999999 →15999999 →16999999 →18999999 →1G
											84049001	bore ø 19 ø 230 x 42	⊕ rear drum brake →12999999 →15999999 →16999999 →18999999 →1G
										PRO	92092003	ø 240 x 10 x 42.7	⊕ rear disc brake
											TPM0008		
											94020300	ø 230,0 x 50.2	⊕ rear drum brake
		495400	Ate		2306302	[+] 23063 17.3	⊖ ABS		Bos		2325803	[+] 23258 16.9	
1.8	02/03→01/05	81 / 110	Ate		2383201	[+] 23832 19.6	⊕ ABS		Luc		2341703	[+] 23417 15.2	
1.8 16V	09/98→09/00	85 / 116	Ate	epad	2383281	[+] 23832 19.6	⊕ ABS		Luc		82060100		
					98023300	L720	⊕ on-board comp. ⊖ ABS		Luc		82063300		
					98029800	L750	⊖ elec. damp. susp.		Bos		82063700		
					98031400	L287	⊕ elec. damp. susp.			PRO	92092103	ø 264 x 10 x 42	⊕ ABS
			Ate		82032000		⊕ ABS				TPM0008		
			Ate		82062900		⊖ ABS						
				PRO	92091803	ø 256 x 24 x 41	⊖ ABS						
				PRO	92091903	ø 280 x 25 x 42	⊕ ABS						
					TPM0007								

			kW / hp												
ASTRA G Saloon (F69_) 09/98→12/09															
		495500		Ate		**2306302**	[+] 23063 17.3	⊖ ABS →09/01		Bos		**2325803**	[+] 23258 16.9		
1.8 16V	06/00→01/05	92 / 125													
2.0 DI	09/98→01/05	60 / 82		Ate		**2383201**	[+] 23832 19.6	⊕ ABS		Luc		**2341703**	[+] 23417 15.2		
				Ate		**2383281**	[+] 23832 19.6	⊕ ABS		Luc		**82060100**			
						98023300	L720	⊕ on-board comp. ⊖ ABS		Luc		**82063300**			
						98029800	L750	⊖ elec. damp. susp.		Bos		**82063700**			
						98031400	L287	⊕ elec. damp. susp.			PRO	**92092103**	ø 264 x 10 x 42	⊕ ABS	
				Ate		**82032000**		⊕ ABS				**TPM0008**			
				Ate		**82062900**		⊖ ABS →09/01							
					PRO	**92091803**	ø 256 x 24 x 41	⊖ ABS →09/01							
					PRO	**92091903**	ø 280 x 25 x 42	⊕ ABS							
						TPM0007									
		495600		Ate		**2383201**	[+] 23832 19.6			Bos		**2325803**	[+] 23258 16.9		
2.0 16V	09/98→01/05	100 / 136													
2.2 16V	03/01→01/05	108 / 147		Ate		**2383281**	[+] 23832 19.6			Luc		**2341703**	[+] 23417 15.2		
2.2 DTI	09/02→01/05	92 / 125													
						98029800	L750	⊖ elec. damp. susp.		Luc		**82060100**			
						98031400	L287	⊕ elec. damp. susp.		Luc		**82063300**			
				Ate		**82032000**				Bos		**82063700**			
				Ate		**82062900**					PRO	**92092103**	ø 264 x 10 x 42		
					PRO	**92091903**	ø 280 x 25 x 42					**TPM0008**			
						TPM0007									
		495700		Ate		**2306302**	[+] 23063 17.3	⊖ ABS →09/01		Bos		**2325803**	[+] 23258 16.9		
2.0 DTI 16V	08/99→01/05	74 / 101		Ate		**2383201**	[+] 23832 19.6	⊕ ABS		Luc		**2341703**	[+] 23417 15.2		
				Ate		**2383281**	[+] 23832 19.6	⊕ ABS		Luc		**82060100**			
						98023300	L720	⊕ on-board comp. ⊖ ABS		Luc		**82063300**			
						98029800	L750	⊖ elec. damp. susp.		Bos		**82063700**			
						98031400	L287	⊕ elec. damp. susp.			PRO	**92092103**	ø 264 x 10 x 42		
				Ate		**82032000**		⊕ ABS				**TPM0008**			
				Ate		**82062900**		⊖ ABS →09/01							
					PRO	**92091803**	ø 256 x 24 x 41	⊖ ABS →09/01							
					PRO	**92091903**	ø 280 x 25 x 42	⊕ ABS							
						TPM0007									
		495800		Ate		**2383201**	[+] 23832 19.6			Luc		**2341703**	[+] 23417 15.2		
2.2 DTI	09/02→01/05	86 / 117		Ate		**2383281**	[+] 23832 19.6			Luc		**82063300**			
				Ate		**82032000**				Bos		**82063700**			
				Ate		**82062900**					PRO	**92092103**	ø 264 x 10 x 42		
					PRO	**92091903**	ø 280 x 25 x 42					**TPM0008**			
						TPM0007									
ASTRA G Schrägheck (F48_, F08_) 02/98→12/09 → ASTRA G Hatchback (F48_, F08_), Page 780															
ASTRA G Stufenheck (F69_) 09/98→12/09 → ASTRA G Saloon (F69_), Page 783															
ASTRA GTC J 10/11→															
		495900				**2503101**	[+] 25031 18.8	15" -brake				**2509601**	[+] 25096 16.2	15" -brake	
1.4	10/11→	74 / 101													
1.4	10/11→	88 / 120				**2503181**	[+] 25031 18.8	15" -brake				**2509602**	[+] 25096 16.2	16" -brake	
1.4	10/11→	103 / 140													
1.6	10/11→	132 / 180													

			kW / hp											
ASTRA GTC J 10/11→														
1.6 SIDI	12/12→	125 / 170			2503401	[+] 25034 18.8	16" -brake			2509681	[+] 25096 16.2	15" -brake
1.7 CDTI	10/11→	81 / 110										
1.7 CDTI	10/11→	96 / 131			2503481	[+] 25034 18.8	16" -brake			82513400		
1.8	10/11→	103 / 140										
2.0	04/12→	206 / 280		Man	82505200				PRO	92205503	ø 268 x 12 x 45.1	15" -brake
2.0 BiTurbo CDTI	10/12→	143 / 194										
2.0 CDTI	10/11→	121 / 165			92198903	ø 276 x 26 x 45.5	15" -brake		PRO	92205703	ø 292 x 12 x 44.9	16" -brake
					92205603	ø 300 x 26 x 45.5	16" -brake					
		496000		Bre	2332502	[+] 23325 16	18" -brake			2509602	[+] 25096 16.2	15" 16" 17" -brake →E0999999, E1999999 →E3999999, E8999999 →EG999999
1.6 CDTI	07/14→	81 / 110										
1.6 CDTI	07/14→	100 / 136		Man	2441201	[+] 24412 19.1	17" -brake					
1.6 SIDI	07/13→	147 / 200							PRO	92205503	ø 268 x 12 x 45.1	15" -brake
					2503101	[+] 25031 18.8	15" -brake					
									PRO	92205703	ø 292 x 12 x 44.9	16" -brake →A8049708, AG057579
					2503181	[+] 25031 18.8	15" -brake					
					2503401	[+] 25034 18.8	16" -brake					
					2503481	[+] 25034 18.8	16" -brake					
				Bre	82072400		18" -brake					
					92198903	ø 276 x 26 x 45.5	15" -brake					
					92205603	ø 300 x 26 x 45.5	16" -brake					
					92256803	ø 321 x 30 x 45.6	17" -brake					
ASTRA H (L48) 03/04→												
		496100		Ate	2383201	[+] 23832 19.6		Luc		2341702	[–] 23417 15.2	⊕ rear disc brake ⊕ rim 4 hole
1.2	08/05→	59 / 80										
1.3 CDTI	08/05→	66 / 90		Ate	2383281	[+] 23832 19.6		Luc		2341781	[–] 23417 15.2	⊕ rear disc brake ⊕ rim 4 hole
1.4	03/04→	66 / 90										
1.4	04/04→10/04	55 / 75			98031400	L287		Luc		2341703	[+] 23417 15.2	⊕ rear disc brake ⊕ rim 5 hole
1.4	04/04→10/04	59 / 80										
1.4 LPG	08/09→	66 / 90		Ate	82032000			Luc		82060100		
1.6	03/04→	77 / 105										
1.6	12/06→	85 / 116		Ate	82062900			Luc		82063300		
1.7 CDTI	03/04→	59 / 80										
1.7 CDTI	03/04→	74 / 100			92091903	ø 280 x 25 x 42	⊕ rim 5 hole			91060100	ø 230 x 42	⊕ rear drum brake
1.7 CDTI	02/07→	81 / 110										
1.8	03/04→	92 / 125			92129303	ø 280 x 25 x 43.2	⊕ rim 4 hole		PRO	92092003	ø 240 x 10 x 42.7	⊕ rear disc brake ⊕ rim 4 hole
1.8	01/06→	103 / 140							PRO	92092103	ø 264 x 10 x 42	⊕ rear disc brake ⊕ rim 5 hole
										94031500	ø 230 x 50	⊕ rear drum brake
		496200		Ate	2383201	[+] 23832 19.6		Luc		2341702	[–] 23417 15.2	⊕ rear disc brake
1.6 CNG	11/05→	69 / 94										
				Ate	2383281	[+] 23832 19.6		Luc		2341781	[–] 23417 15.2	⊕ rear disc brake
					98031400	L287		Luc		2341703	[+] 23417 15.2	⊕ rear disc brake ⊕ rim 5 hole
				Ate	82032000			Luc		82060100		
				Ate	82062900			Luc		82063300		
					92091903	ø 280 x 25 x 42	⊕ rim 5 hole			91060100	ø 230 x 42	⊕ rear drum brake
					92129303	ø 280 x 25 x 43.2	⊕ rim 4 hole		PRO	92092003	ø 240 x 10 x 42.7	⊕ rear disc brake
									PRO	92092103	ø 264 x 10 x 42	⊕ rear disc brake ⊕ rim 5 hole
										94031500	ø 230 x 50	⊕ rear drum brake
		496300		Ate	2383201	[+] 23832 19.6		Luc		2341702	[–] 23417 15.2	⊕ rear disc brake ⊕ rim 4 hole
1.6 Turbo	02/07→	132 / 180										
1.9 CDTI	09/05→	74 / 100		Ate	2383281	[+] 23832 19.6		Luc		2341781	[–] 23417 15.2	⊕ rear disc brake ⊕ rim 4 hole
					98031400	L287		Luc		2341703	[+] 23417 15.2	⊕ rear disc brake ⊕ rim 5 hole
				Ate	82032000			Luc		82060100		
				Ate	82062900			Luc		82063300		
					92110903	ø 308 x 25 x 42	⊕ rim 5 hole			91060100	ø 230 x 42	⊕ rear drum brake

→

		kW / hp												
ASTRA H (L48) 03/04→														
		496300		PRO	92129303	ø 280 x 25 x 43.2	⊕ rim 4 hole		PRO	92092003	ø 240 x 10 x 42.7	⊕ rear disc brake ⊕ rim 4 hole
1.6 Turbo	02/07→	132 / 180							PRO	92092103	ø 264 x 10 x 42	⊕ rear disc brake ⊕ rim 5 hole
1.9 CDTI	09/05→	74 / 100								94031500	ø 230 x 50	⊕ rear drum brake
		496400	Ate		2383201	[+] 23832 19.6		Luc		2341702	[–] 23417 15.2	⊕ rear disc brake ⊕ rim 4 hole
1.7 CDTI	02/07→	92 / 125										
1.9 CDTI	06/04→	88 / 120	Ate	epad	2383281	[+] 23832 19.6		Luc	epad	2341781	[–] 23417 15.2	⊕ rear disc brake ⊕ rim 4 hole
1.9 CDTI	09/04→	110 / 150										
1.9 CDTI 16V	04/04→	88 / 120			98031400	L287		Luc		2341703	[+] 23417 15.2	⊕ rear disc brake ⊕ rim 5 hole
2.0 Turbo	03/04→	125 / 170	Ate		82032000			Luc		82060100		
			Ate		82062900			Luc		82063300		
				PRO	92110903	ø 308 x 25 x 42				91060100	ø 230 x 42	⊕ rear drum brake
									PRO	92092003	ø 240 x 10 x 42.7	⊕ rear disc brake ⊕ rim 4 hole
									PRO	92092103	ø 264 x 10 x 42	⊕ rear disc brake ⊕ rim 5 hole
										94031500	ø 230 x 50	⊕ rear drum brake
		496500	Ate		2383201	[+] 23832 19.6		Luc		2341702	[–] 23417 15.2	⊕ rim 4 hole
2.0 Turbo	09/04→	147 / 200										
			Ate	epad	2383281	[+] 23832 19.6		Luc	epad	2341781	[–] 23417 15.2	⊕ rim 4 hole
					98031400	L287		Luc		2341703	[+] 23417 15.2	⊕ rim 5 hole
			Ate		82032000			Luc		82060100		
			Ate		82062900			Luc		82063300		
				PRO	92110903	ø 308 x 25 x 42			PRO	92092003	ø 240 x 10 x 42.7	⊕ rim 4 hole
									PRO	92092103	ø 264 x 10 x 42	⊕ rim 5 hole
		496600	Ate		2373807	[o] 23738 20.6		Luc		2341702	[–] 23417 15.2	⊕ rim 4 hole
2.0 Turbo	03/05→	177 / 240										
					98031400	L287		Luc	epad	2341781	[–] 23417 15.2	⊕ rim 4 hole
			Ate		82062900			Luc		2341703	[+] 23417 15.2	⊕ rim 5 hole
				PRO	92149803	ø 321 x 28 x 44		Luc		82060100		
								Luc		82063300		
										92167600	ø 278 x 10 x 42	
									PRO	92167603	ø 278 x 10 x 42	
ASTRA H Estate (L35) 08/04→												
		496700	Ate		2383201	[+] 23832 19.6		Luc		2341702	[–] 23417 15.2	⊕ rear disc brake ⊕ rim 4 hole
1.3 CDTI	08/05→	66 / 90										
1.4	08/04→	55 / 75	Ate	epad	2383281	[+] 23832 19.6		Luc	epad	2341781	[–] 23417 15.2	⊕ rear disc brake ⊕ rim 4 hole
1.4	08/04→	66 / 90										
1.4 LPG	08/09→	66 / 90			98031400	L287		Luc		2341703	[+] 23417 15.2	⊕ rear disc brake ⊕ rim 5 hole
1.6	08/04→	77 / 105										
1.6	12/06→	85 / 116	Ate		82032000			Luc		82060100		
1.6 LPG	08/09→	85 / 116										
1.7 CDTI	08/04→	59 / 80	Ate		82062900			Luc		82063300		
1.7 CDTI	08/04→	74 / 101										
1.8	08/04→	92 / 125		PRO	92091903	ø 280 x 25 x 42	⊕ rim 5 hole			91060100	ø 230 x 42	⊕ rear drum brake
1.8	08/05→	103 / 140										
				PRO	92129303	ø 280 x 25 x 43.2	⊕ rim 4 hole		PRO	92092003	ø 240 x 10 x 42.7	⊕ rear disc brake ⊕ rim 4 hole
									PRO	92092103	ø 264 x 10 x 42	⊕ rim 5 hole ⊕ rear disc brake
										94031500	ø 230 x 50	⊕ rear drum brake
		496800	Ate		2383201	[+] 23832 19.6		Luc		2341702	[–] 23417 15.2	⊕ rear disc brake
1.6 CNG	11/05→	69 / 94										
			Ate	epad	2383281	[+] 23832 19.6		Luc	epad	2341781	[–] 23417 15.2	⊕ rear disc brake
					98031400	L287		Luc		2341703	[+] 23417 15.2	⊕ rear disc brake ⊕ rim 5 hole
			Ate		82032000			Luc		82060100		

N - P

30 kW / hp

ASTRA H Estate (L35) 08/04→

		496800	Ate		82062900			Luc		82063300			
1.6 CNG	11/05→	69 / 94		PRO	92091903	ø 280 x 25 x 42	⊕ rim 5 hole			91060100	ø 230 x 42	⊕ rear drum brake	
				PRO	92129303	ø 280 x 25 x 43.2	⊕ rim 4 hole		PRO	92092003	ø 240 x 10 x 42.7	⊕ rear disc brake	
									PRO	92092103	ø 264 x 10 x 42	⊕ rim 5 hole ⊕ rear disc brake	
										94031500	ø 230 x 50	⊕ rear drum brake	
		496900	Ate		2383201	[+] 23832 19.6		Luc		2341702	[–] 23417 15.2	⊕ rear disc brake ⊕ rim 4 hole	
1.6 Turbo	02/07→	132 / 180											
1.7 CDTI	02/07→	92 / 125											
1.9 CDTI	09/05→	74 / 100	Ate	epad	2383281	[+] 23832 19.6		Luc	epad	2341781	[–] 23417 15.2	⊕ rear disc brake ⊕ rim 4 hole	
1.9 CDTI 16V	08/04→	88 / 120											
					98031400	L287		Luc		2341703	[+] 23417 15.2	⊕ rear disc brake ⊕ rim 5 hole	
			Ate		82032000			Luc		82060100			
			Ate		82062900			Luc		82063300			
				PRO	92110903	ø 308 x 25 x 42	⊕ rim 5 hole			91060100	ø 230 x 42	⊕ rear drum brake	
				PRO	92129303	ø 280 x 25 x 43.2	⊕ rim 4 hole		PRO	92092003	ø 240 x 10 x 42.7	⊕ rear disc brake ⊕ rim 4 hole	
									PRO	92092103	ø 264 x 10 x 42	⊕ rim 5 hole ⊕ rear disc brake	
										94031500	ø 230 x 50	⊕ rear drum brake	
		497000	Ate		2383201	[+] 23832 19.6		Luc		2341702	[–] 23417 15.2	⊕ rear disc brake ⊕ rim 4 hole	
1.7 CDTI	02/07→	81 / 110	Ate	epad	2383281	[+] 23832 19.6		Luc	epad	2341781	[–] 23417 15.2	⊕ rear disc brake ⊕ rim 4 hole	
					98031400	L287		Luc		2341703	[+] 23417 15.2	⊕ rear disc brake ⊕ rim 5 hole	
			Ate		82032000			Luc		82060100			
			Ate		82062900			Luc		82063300			
				PRO	92091903	ø 280 x 25 x 42	15" -brake ⊕ rim 5 hole			91060100	ø 230 x 42	⊕ rear drum brake	
				PRO	92110903	ø 308 x 25 x 42	⊕ rim 5 hole		PRO	92092003	ø 240 x 10 x 42.7	⊕ rear disc brake ⊕ rim 4 hole	
				PRO	92129303	ø 280 x 25 x 43.2	⊕ rim 4 hole		PRO	92092103	ø 264 x 10 x 42	⊕ rim 5 hole ⊕ rear disc brake	
										94031500	ø 230 x 50	⊕ rear drum brake	
		497100	Ate		2383201	[+] 23832 19.6		Luc		2341702	[–] 23417 15.2	⊕ rear disc brake ⊕ rim 4 hole	
1.9 CDTI	09/04→	110 / 150											
1.9 CDTI	09/05→	88 / 120	Ate	epad	2383281	[+] 23832 19.6		Luc	epad	2341781	[–] 23417 15.2	⊕ rear disc brake ⊕ rim 4 hole	
					98031400	L287		Luc		2341703	[+] 23417 15.2	⊕ rear disc brake ⊕ rim 5 hole	
			Ate		82032000			Luc		82060100			
			Ate		82062900			Luc		82063300			
				PRO	92110903	ø 308 x 25 x 42				91060100	ø 230 x 42	⊕ rear drum brake	
									PRO	92092003	ø 240 x 10 x 42.7	⊕ rear disc brake ⊕ rim 4 hole	
									PRO	92092103	ø 264 x 10 x 42	⊕ rim 5 hole ⊕ rear disc brake	
										94031500	ø 230 x 50	⊕ rear drum brake	
		497200	Ate		2383201	[+] 23832 19.6		Luc		2341702	[–] 23417 15.2	⊕ rim 4 hole	
2.0 Turbo	08/04→	125 / 170											
2.0 Turbo	09/04→	147 / 200	Ate	epad	2383281	[+] 23832 19.6		Luc	epad	2341781	[–] 23417 15.2	⊕ rim 4 hole	
					98031400	L287		Luc		2341703	[+] 23417 15.2	⊕ rim 5 hole	
			Ate		82032000			Luc		82060100			
			Ate		82062900			Luc		82063300			
				PRO	92110903	ø 308 x 25 x 42			PRO	92092003	ø 240 x 10 x 42.7	⊕ rim 4 hole	
									PRO	92092103	ø 264 x 10 x 42	⊕ rim 5 hole	

N - P

30 kW / hp

ASTRA H GTC (L08) 03/05→

		497300	Ate		2383201	[+] 23832 19.6		Luc		2341702	[–] 23417 15.2	⊕ rear disc brake ⊕ rim 4 hole
1.2	08/05→	59 / 80										
1.3 CDTI	04/05→	66 / 90	Ate	epad	2383281	[+] 23832 19.6		Luc	epad	2341781	[–] 23417 15.2	⊕ rear disc brake ⊕ rim 4 hole
1.4	03/05→	66 / 90										
1.6	03/05→	77 / 105										
1.6	12/06→	85 / 116			98031400	L287		Luc		2341703	[+] 23417 15.2	⊕ rim 5 hole ⊕ rear disc brake
1.7 CDTi	03/05→	74 / 101										
1.7 CDTI	03/05→	59 / 80	Ate		82032000			Luc		82060100		
1.7 CDTI	02/07→	81 / 110										
1.8	03/05→	92 / 125	Ate		82062900			Luc		82063300		
1.8	01/06→	103 / 140										
				PRO	92091903	ø 280 x 25 x 42	⊕ rim 5 hole			91060100	ø 230 x 42	⊕ rear drum brake
				PRO	92129303	ø 280 x 25 x 43.2	⊕ rim 4 hole		PRO	92092003	ø 240 x 10 x 42.7	⊕ rear disc brake ⊕ rim 4 hole
									PRO	92092103	ø 264 x 10 x 42	⊕ rear disc brake ⊕ rim 5 hole
										94031500	ø 230 x 50	⊕ rear drum brake
		497400	Ate		2383201	[+] 23832 19.6		Luc		2341702	[–] 23417 15.2	⊕ rim 4 hole
1.4	03/05→	55 / 75										
			Ate	epad	2383281	[+] 23832 19.6		Luc	epad	2341781	[–] 23417 15.2	⊕ rim 4 hole
			Ate		82032000			Luc		2341703	[+] 23417 15.2	⊕ rim 5 hole
			Ate		82062900			Luc		82063300		
				PRO	92091903	ø 280 x 25 x 42			PRO	92092003	ø 240 x 10 x 42.7	⊕ rim 4 hole
					TPM0007		⊕ rim 5 hole		PRO	92092103	ø 264 x 10 x 42	⊕ rim 5 hole
										TPM0008		
		497500	Ate		2383201	[+] 23832 19.6		Luc		2341702	[–] 23417 15.2	⊕ rear disc brake
1.6 CNG	11/05→	69 / 94										
			Ate	epad	2383281	[+] 23832 19.6		Luc	epad	2341781	[–] 23417 15.2	⊕ rear disc brake
					98031400	L287		Luc		2341703	[+] 23417 15.2	⊕ rim 5 hole
			Ate		82032000			Luc		82060100		
			Ate		82062900			Luc		82063300		
				PRO	92091903	ø 280 x 25 x 42	⊕ rim 5 hole			91060100	ø 230 x 42	⊕ rear drum brake
				PRO	92129303	ø 280 x 25 x 43.2	⊕ rim 4 hole		PRO	92092003	ø 240 x 10 x 42.7	⊕ rear disc brake
									PRO	92092103	ø 264 x 10 x 42	⊕ rear disc brake ⊕ rim 5 hole
										94031500	ø 230 x 50	⊕ rear drum brake
		497600	Ate		2383201	[+] 23832 19.6		Luc		2341702	[–] 23417 15.2	⊕ rear disc brake ⊕ rim 4 hole
1.6 Turbo	02/07→	132 / 180										
1.7 CDTI	02/07→	92 / 125	Ate	epad	2383281	[+] 23832 19.6		Luc	epad	2341781	[–] 23417 15.2	⊕ rear disc brake ⊕ rim 4 hole
1.9 CDTI	01/06→	74 / 101										
					98031400	L287		Luc		2341703	[+] 23417 15.2	⊕ rim 5 hole ⊕ rear disc brake
			Ate		82032000			Luc		82060100		
			Ate		82062900			Luc		82063300		
				PRO	92110903	ø 308 x 25 x 42	⊕ rim 5 hole			91060100	ø 230 x 42	⊕ rear drum brake
				PRO	92129303	ø 280 x 25 x 43.2	⊕ rim 4 hole		PRO	92092003	ø 240 x 10 x 42.7	⊕ rear disc brake ⊕ rim 4 hole
									PRO	92092103	ø 264 x 10 x 42	⊕ rear disc brake ⊕ rim 5 hole
										94031500	ø 230 x 50	⊕ rear drum brake
		497700	Ate		2383201	[+] 23832 19.6		Luc		2341702	[–] 23417 15.2	⊕ rear disc brake ⊕ rim 4 hole
1.9 CDTi	03/05→	110 / 150										
1.9 CDTI	09/05→	88 / 120	Ate	epad	2383281	[+] 23832 19.6		Luc	epad	2341781	[–] 23417 15.2	⊕ rear disc brake ⊕ rim 4 hole
1.9 CDTi 16V	03/05→	88 / 120										
					98031400	L287		Luc		2341703	[+] 23417 15.2	⊕ rim 5 hole ⊕ rear disc brake
			Ate		82032000			Luc		82060100		
			Ate		82062900			Luc		82063300		
				PRO	92110903	ø 308 x 25 x 42				91060100	ø 230 x 42	⊕ rear drum brake

N - P

		kW / hp											
ASTRA H GTC (L08) 03/05→													
		497700											
1.9 CDTi	03/05→	110 / 150								PRO	92092003	ø 240 x 10 x 42.7	⊕ rear disc brake ⊕ rim 4 hole
1.9 CDTI	09/05→	88 / 120								PRO	92092103	ø 264 x 10 x 42	⊕ rear disc brake ⊕ rim 5 hole
1.9 CDTi 16V	03/05→	88 / 120									94031500	ø 230 x 50	⊕ rear drum brake
		497800	Ate		2383201	[+] 23832 19.6		Luc		2341702	[–] 23417 15.2	⊕ rim 4 hole	
2.0 Turbo	03/05→	125 / 170	Ate	epad	2383281	[+] 23832 19.6		Luc	epad	2341781	[–] 23417 15.2	⊕ rim 4 hole	
					98031400	L287		Luc		2341703	[+] 23417 15.2	⊕ rim 5 hole	
			Ate		82032000			Luc		82060100			
			Ate		82062900			Luc		82063300			
				PRO	92110903	ø 308 x 25 x 42			PRO	92092003	ø 240 x 10 x 42.7	⊕ rim 4 hole	
									PRO	92092103	ø 264 x 10 x 42	⊕ rim 5 hole	
		497900	Ate		2383201	[+] 23832 19.6		Luc		2341702	[–] 23417 15.2	⊕ rear disc brake ⊕ rim 4 hole	
2.0 Turbo	03/05→	147 / 200	Ate	epad	2383281	[+] 23832 19.6		Luc	epad	2341781	[–] 23417 15.2	⊕ rear disc brake ⊕ rim 4 hole	
					98031400	L287		Luc		2341703	[+] 23417 15.2	⊕ rim 5 hole ⊕ rear disc brake	
			Ate		82032000			Luc		82060100		⊕ rear disc brake	
			Ate		82062900			Luc		82063300		⊕ rear disc brake	
				PRO	92110903	ø 308 x 25 x 42				91060100	ø 230 x 42	⊕ rear drum brake	
									PRO	92092003	ø 240 x 10 x 42.7	⊕ rear disc brake 4	
									PRO	92092103	ø 264 x 10 x 42	⊕ rear disc brake ⊕ rim 5 hole	
										94031500	ø 230 x 50	⊕ rear drum brake	
		498000	Ate		2373807	[o] 23738 20.6		Luc		2341702	[–] 23417 15.2	⊕ rim 4 hole	
2.0 Turbo	08/05→	177 / 240			98031400	L287		Luc	epad	2341781	[–] 23417 15.2	⊕ rim 4 hole	
			Ate		82062900			Luc		2341703	[+] 23417 15.2	⊕ rim 5 hole	
				PRO	92149803	ø 321 x 28 x 44		Luc		82060100			
								Luc		82063300			
										92167600	ø 278 x 10 x 42		
									PRO	92167603	ø 278 x 10 x 42		
ASTRA H Kombi (L35) 08/04→ → ASTRA H Estate (L35), Page 787													
ASTRA H Saloon (L69) 02/07→													
		498100	Ate		2383201	[+] 23832 19.6		Luc		2341702	[–] 23417 15.2	⊕ rear disc brake ⊕ rim 4 hole	
1.3 CDTi	02/07→	66 / 90											
1.6	02/07→	85 / 116	Ate	epad	2383281	[+] 23832 19.6		Luc	epad	2341781	[–] 23417 15.2	⊕ rear disc brake ⊕ rim 4 hole	
1.7 CDTi	02/07→	74 / 101											
1.7 CDTi	02/07→	81 / 110	Ate		82032000			Luc		2341703	[+] 23417 15.2	⊕ rear disc brake ⊕ rim 5 hole	
1.8	02/07→	103 / 140	Ate		82062900			Luc		82060100			
				PRO	92091903	ø 280 x 25 x 42	⊕ rim 5 hole	Luc		82063300			
				PRO	92129303	ø 280 x 25 x 43.2	⊕ rim 4 hole			91060100	ø 230 x 42	⊕ rear drum brake	
									PRO	92092003	ø 240 x 10 x 42.7	⊕ rear disc brake ⊕ rim 4 hole	
									PRO	92092103	ø 264 x 10 x 42	⊕ rear disc brake ⊕ rim 5 hole	
										94031500	ø 230 x 50	⊕ rear drum brake	
		498200	Ate		2383201	[+] 23832 19.6	⊖ OPC,VXR	Luc		2341702	[–] 23417 15.2	⊕ rear disc brake ⊕ rim 4 hole	
1.7 CDTI	07/10→	92 / 125	Ate	epad	2383281	[+] 23832 19.6	⊖ OPC,VXR	Luc	epad	2341781	[–] 23417 15.2	⊕ rear disc brake ⊕ rim 4 hole	
			Ate		82032000			Luc		2341703	[+] 23417 15.2	⊕ rear disc brake ⊕ rim 5 hole	

N - P

		kW / hp											
ASTRA H Saloon (L69) 02/07→													
498200													
1.7 CDTI	07/10→	92 / 125		PRO	92110903	ø 308 x 25 x 42	⊕ rim 5 hole			91060100	ø 230 x 42	→82 →85 →88 →8G	
				PRO	92129303	ø 280 x 25 x 43.2	⊕ rim 4 hole		PRO	92092003	ø 240 x 10 x 42.7	⊕ rear disc brake ⊕ rim 4 hole	
					TPM0007		⊕ rim 5 hole		PRO	92092103	ø 264 x 10 x 42	⊕ rim 5 hole ⊖ OPC,VXR ⊕ rear disc brake	
										94031500	ø 230 x 50		
ASTRA H Sport Hatch (L08) 03/05→ → ASTRA H GTC (L08), Page 789													
ASTRA H Stufenheck (L69) 02/07→ → ASTRA H Saloon (L69), Page 790													
ASTRA H TwinTop (L67) 09/05→													
498300			Ate		2383201	[+] 23832 19.6		Luc		2341702	[–] 23417 15.2	⊕ rear disc brake ⊕ rim 4 hole	
1.6	09/05→	77 / 105											
1.6	12/06→	85 / 116											
1.8	09/05→	92 / 125	Ate	epad	2383281	[+] 23832 19.6		Luc	epad	2341781	[–] 23417 15.2	⊕ rear disc brake ⊕ rim 4 hole	
1.8	09/05→	103 / 140			98031400	L287		Luc		2341703	[+] 23417 15.2	⊕ rear disc brake ⊕ rim 5 hole	
			Ate		82032000			Luc		82060100			
			Ate		82062900			Luc		82063300			
				PRO	92091903	ø 280 x 25 x 42	⊕ rim 5 hole			91060100	ø 230 x 42	⊕ rear drum brake	
				PRO	92129303	ø 280 x 25 x 43.2	⊕ rim 4 hole		PRO	92092003	ø 240 x 10 x 42.7	⊕ rear disc brake ⊕ rim 4 hole	
									PRO	92092103	ø 264 x 10 x 42	⊕ rim 5 hole ⊕ rear disc brake	
										94031500	ø 230 x 50	⊕ rear drum brake	
498400			Ate		2383201	[+] 23832 19.6		Luc		2341702	[–] 23417 15.2	⊕ rear disc brake ⊕ rim 4 hole	
1.6 Turbo	02/07→	132 / 180	Ate	epad	2383281	[+] 23832 19.6		Luc	epad	2341781	[–] 23417 15.2	⊕ rear disc brake ⊕ rim 4 hole	
					98031400	L287		Luc		2341703	[+] 23417 15.2	⊕ rear disc brake ⊕ rim 5 hole	
			Ate		82032000			Luc		82060100			
			Ate		82062900			Luc		82063300			
				PRO	92110903	ø 308 x 25 x 42	⊕ rim 5 hole			91060100	ø 230 x 42	⊕ rear drum brake	
				PRO	92129303	ø 280 x 25 x 43.2	⊕ rim 4 hole		PRO	92092003	ø 240 x 10 x 42.7	⊕ rear disc brake ⊕ rim 4 hole	
									PRO	92092103	ø 264 x 10 x 42	⊕ rim 5 hole ⊕ rear disc brake	
										94031500	ø 230 x 50	⊕ rear drum brake	
498500			Ate		2383201	[+] 23832 19.6		Luc		2341702	[–] 23417 15.2	⊕ rim 4 hole	
1.9 CDTi	09/05→	110 / 150	Ate	epad	2383281	[+] 23832 19.6		Luc	epad	2341781	[–] 23417 15.2	⊕ rim 4 hole	
					98031400	L287		Luc		2341703	[+] 23417 15.2	⊕ rim 5 hole	
			Ate		82032000			Luc		82060100			
			Ate		82062900			Luc		82063300			
				PRO	92110903	ø 308 x 25 x 42			PRO	92092003	ø 240 x 10 x 42.7	⊕ rim 4 hole	
									PRO	92092103	ø 264 x 10 x 42	⊕ rim 5 hole	
498600			Ate		2383201	[+] 23832 19.6		Luc		2341702	[–] 23417 15.2	⊕ rim 4 hole	
2.0 Turbo	09/05→	125 / 170	Ate	epad	2383281	[+] 23832 19.6		Luc	epad	2341781	[–] 23417 15.2	⊕ rim 4 hole	
					98031400	L287		Luc		2341703	[+] 23417 15.2	⊕ rim 5 hole	
			Ate		82062900			Luc		82060100			
				PRO	92110903	ø 308 x 25 x 42		Luc		82063300			
									PRO	92092003	ø 240 x 10 x 42.7	⊕ rim 4 hole	
									PRO	92092103	ø 264 x 10 x 42	⊕ rim 5 hole	
498700			Ate		2373807	[o] 23738 20.6		Luc		2341702	[–] 23417 15.2	⊕ rim 4 hole	
2.0 Turbo	09/05→	147 / 200			98031400	L287		Luc	epad	2341781	[–] 23417 15.2	⊕ rim 4 hole	

N - P

		kW / hp										
ASTRA H TwinTop (L67) 09/05→												
		498700	Ate		82062900			Luc		2341703	[+] 23417 15.2	⊕ rim 5 hole
2.0 Turbo	09/05→	147 / 200		PRO	92110903	ø 308 x 25 x 42		Luc		82060100		
								Luc		82063300		
									PRO	92092003	ø 240 x 10 x 42.7	⊕ rim 4 hole
									PRO	92092103	ø 264 x 10 x 42	⊕ rim 5 hole
ASTRA H Van (L70) 02/04→11/04												
		498800	Ate		2383201	[+] 23832 19.6		Luc		2341702	[–] 23417 15.2	⊕ rim 4 hole
1.3 CDTI	08/05→	66 / 90										
1.7 CDTI	03/04→	74 / 101										
1.7 CDTI	02/07→	81 / 110	Ate	ebpad	2383281	[+] 23832 19.6		Luc	ebpad	2341781	[–] 23417 15.2	⊕ rim 4 hole
			Ate		82032000			Luc		2341703	[+] 23417 15.2	⊕ rim 5 hole
				PRO	92091903	ø 280 x 25 x 42		Luc		82060100		
					TPM0007		⊕ rim 5 hole		PRO	92092003	ø 240 x 10 x 42.7	⊕ rim 4 hole
					TPM0008		⊕ rim 4 hole		PRO	92092103	ø 264 x 10 x 42	⊕ rim 5 hole
										TPM0008		
		498900	Ate		2383201	[+] 23832 19.6		Luc		2341702	[–] 23417 15.2	⊕ rear disc brake ⊕ rim 4 hole
1.6	02/04→11/04	76 / 103	Ate	ebpad	2383281	[+] 23832 19.6		Luc	ebpad	2341781	[–] 23417 15.2	⊕ rear disc brake ⊕ rim 4 hole
					98031400	L287		Luc		2341703	[+] 23417 15.2	⊕ rear disc brake ⊕ rim 5 hole
			Ate		82032000			Luc		82060100		
			Ate		82062900			Luc		82063300		
				PRO	92091903	ø 280 x 25 x 42	⊕ rim 5 hole			91060100	ø 230 x 42	⊕ rear drum brake
				PRO	92129303	ø 280 x 25 x 43.2	⊕ rim 4 hole		PRO	92092003	ø 240 x 10 x 42.7	⊕ rear disc brake ⊕ rim 4 hole
									PRO	92092103	ø 264 x 10 x 42	⊕ rim 5 hole ⊕ rear disc brake
										94031500	ø 230 x 50	⊕ rear drum brake
		499000	Ate		2383201	[+] 23832 19.6		Luc		2341702	[–] 23417 15.2	⊕ rim 4 hole
1.7 CDTI	02/07→	92 / 125										
1.9 CDTI	09/05→	88 / 120										
1.9 CDTI 16V	08/04→	88 / 120	Ate	ebpad	2383281	[+] 23832 19.6		Luc	ebpad	2341781	[–] 23417 15.2	⊕ rim 4 hole
			Ate		82032000			Luc		2341703	[+] 23417 15.2	⊕ rim 5 hole
				PRO	92110903	ø 308 x 25 x 42		Luc		82060100		
					TPM0007		⊕ rim 5 hole		PRO	92092003	ø 240 x 10 x 42.7	⊕ rim 4 hole
					TPM0008		⊕ rim 4 hole		PRO	92092103	ø 264 x 10 x 42	⊕ rim 5 hole
										TPM0008		
		499100	Ate		2383201	[+] 23832 19.6		Luc		2341702	[–] 23417 15.2	no. of. teeth 4
1.9 CDTI	09/04→	110 / 150	Ate	ebpad	2383281	[+] 23832 19.6		Luc	ebpad	2341781	[–] 23417 15.2	no. of. teeth 4
			Ate		82032000			Luc		2341703	[+] 23417 15.2	no. of. teeth 5
				PRO	92110903	ø 308 x 25 x 42		Luc		82060100		
					TPM0007		⊕ rim 5 hole		PRO	92092003	ø 240 x 10 x 42.7	⊕ rim 4 hole
					TPM0008		⊕ rim 4 hole		PRO	92092103	ø 264 x 10 x 42	no. of. teeth 5
										TPM0008		
ASTRA J 12/09→												
		499200			2503101	[+] 25031 18.8	15" -brake			2509601	[+] 25096 16.2	15" -brake
1.3 CDTI	12/09→	70 / 95										
1.4	12/09→	64 / 87										
1.4	12/09→	74 / 100		ebpad	2503181	[+] 25031 18.8	15" -brake			2509602	[+] 25096 16.2	16" -brake
1.4 LPG	01/12→	103 / 140										
1.4 Turbo	12/09→	103 / 140			2503401	[+] 25034 18.8	16" -brake		ebpad	2509681	[+] 25096 16.2	15" -brake
1.4 Turbo	10/10→	88 / 120										
1.6	12/09→	85 / 115										
1.6 CDTi	01/14→	100 / 136										

		kW / hp										
ASTRA J 12/09→												
1.6 CDTi	02/14→	81 / 110		2503481	[+] 25034 18.8	16" -brake		82513400		
1.6 SIDI	12/12→	125 / 170								
1.6 Turbo	12/09→	132 / 180								
1.7 CDTI	12/09→	81 / 110	Man	82505200				92205503	ø 268 x 12 x 45.1	15" -brake
1.7 CDTI	12/09→	92 / 125								
1.7 CDTI	12/09→	96 / 131		92198903	ø 276 x 26 x 45.5	15" -brake		92205703	ø 292 x 12 x 44.9	16" -brake
1.7 CDTI	10/10→	74 / 101								
2.0 BiTurbo CDTI	12/12→	143 / 194								
2.0 CDTI	12/09→	118 / 160		92205603	ø 300 x 26 x 45.5	16" -brake				
2.0 CDTI	06/11→	121 / 165								
ASTRA J Saloon 06/12→										
		499300		2503101	[+] 25031 18.8	15" -brake		2509601	[+] 25096 16.2	15" -brake
1.3 CDTI	06/12→	70 / 95								
1.4	06/12→	74 / 101		2503181	[+] 25031 18.8	15" -brake		2509602	[+] 25096 16.2	16" -brake
1.4 Turbo	06/12→	88 / 120								
1.4 Turbo	06/12→	103 / 140		2503401	[+] 25034 18.8	16" -brake		2509681	[+] 25096 16.2	15" -brake
1.6	06/12→	85 / 116								
1.6 CDTi	01/14→	100 / 136		2503481	[+] 25034 18.8	16" -brake		82513400		
1.6 SIDI	12/12→	125 / 170								
1.6 Turbo	06/12→	132 / 180	Man	82505200				92205503	ø 268 x 12 x 45.1	15" -brake
1.7 CDTI	06/12→	81 / 110								
1.7 CDTI	06/12→	96 / 131		92198903	ø 276 x 26 x 45.5	15" -brake		92205703	ø 292 x 12 x 44.9	16" -brake
				92205603	ø 300 x 26 x 45.5	16" -brake				
		499400	Bre	2332502	[+] 23325 16	18" -brake		2509602	[+] 25096 16.2	15" 16" 17" -brake
1.4 LPG	07/14→	103 / 140								→E0999999, E1999999
1.6 CDTi	04/14→	81 / 110	Man	2441201	[+] 24412 19.1	17" -brake				→E3999999, E8999999
										→EG999999
				2503101	[+] 25031 18.8	15" -brake		92205503	ø 268 x 12 x 45.1	15" -brake
				2503181	[+] 25031 18.8	15" -brake		92205703	ø 292 x 12 x 44.9	16" -brake
				2503401	[+] 25034 18.8	16" -brake				→A8049708, AG057579
				2503481	[+] 25034 18.8	16" -brake				
			Bre	82072400		18" -brake				
				92198903	ø 276 x 26 x 45.5	15" -brake				
				92205603	ø 300 x 26 x 45.5	16" -brake				
				92256803	ø 321 x 30 x 45.6	17" -brake				
ASTRA J Sports Tourer 10/10→										
		499500		2503101	[+] 25031 18.8	15" -brake		2509601	[+] 25096 16.2	15" -brake
1.3 CDTI	10/10→	70 / 95								
1.4	10/10→	74 / 101		2503181	[+] 25031 18.8	15" -brake		2509602	[+] 25096 16.2	16" -brake
1.4 LPG	01/12→	103 / 140								
1.4 Turbo	10/10→	88 / 120		2503401	[+] 25034 18.8	16" -brake		2509681	[+] 25096 16.2	15" -brake
1.4 Turbo	10/10→	103 / 140								
1.6	10/10→	85 / 116		2503481	[+] 25034 18.8	16" -brake		82513400		
1.6 CDTi	01/14→	100 / 136								
1.6 CDTi	02/14→	81 / 110	Man	82505200				92205503	ø 268 x 12 x 45.1	15" -brake
1.6 LPG	10/12→	84 / 114								
1.6 SIDI	12/12→	125 / 170		92198903	ø 276 x 26 x 45.5	15" -brake		92205703	ø 292 x 12 x 44.9	16" -brake
1.6 Turbo	10/10→	132 / 180								
1.7 CDTI	10/10→	74 / 101		92205603	ø 300 x 26 x 45.5	16" -brake				
1.7 CDTI	10/10→	81 / 110								
1.7 CDTI	10/10→	92 / 125								
1.7 CDTI	10/10→	96 / 131								
2.0 BiTurbo CDTI	12/12→	143 / 194								
2.0 CDTI	10/10→	118 / 160								
2.0 CDTI	08/11→	121 / 165								
ASTRA J Stufenheck 06/12→ → ASTRA J Saloon, Page 793										
CAMPO (TF_) 12/92→										
		499600	Ake	2154302	[+] 21543 16.5			91043600	ø 254 x 52	
2.5 DTI	12/01→	74 / 101								
2.5 TD (TFR54)	07/94→	56 / 76	Ake	82049500				97010600		
3.1 TD (TFR69)	12/92→	80 / 109								
				92075800	ø 257 x 22 x 36			94015500	ø 254,0 x 61	
		499700	Ake	2154302	[+] 21543 16.5			91063400	ø 294 x 47	
2.5 DTI 4x4	12/01→	74 / 101								
2.5 TD 4x4 (TFS54)	07/94→	56 / 76	Ake	82049500				97010600		
3.1 TD 4x4 (TFS69)	12/92→	80 / 109								
				92075800	ø 257 x 22 x 36					
CASCADA (W13) 03/13→										
		499800	Man	2441201	[+] 24412 19.1			2509602	[+] 25096 16.2	
1.4	03/13→	88 / 120								
1.4 Turbo	03/13→	103 / 140								
1.6	11/13→	147 / 200								
1.6 SIDI	03/13→	125 / 170								

N - P

		kW / hp											
CASCADA (W13) 03/13→													
2.0 CDTI	03/13→	121 / 165	Man		2441201	[+] 24412 19.1				2509602	[+] 25096 16.2	
2.0 CDTI	03/13→	143 / 194										
COMBO (71_) 07/94→10/01												
		499900	Ate		2054701	[o] 20547 16.8				91033200	ø 230 x 50	
1.2	07/94→10/01	33 / 45										
1.4	07/94→10/01	44 / 60										
1.4	07/94→10/01	60 / 82	Ate		82030600			GM		97001200		
1.4 16V	08/99→10/01	66 / 90										
1.7 D	07/94→10/01	44 / 60	Ate		82062900					84033200	bore ø 19 ø 230 x 50	
				PRO	92029603	ø 236 x 20 x 41				94003700	ø 230,0 x 58.8	
COMBO Box Body / Estate (X12) 02/12→												
		500000	Bos		2370802	[+] 23708 19	Ø 284 mm			97034000		
1.3 CDTI	02/12→	66 / 90										
1.4	02/12→	70 / 95	Bos	epad	2370881	[+] 23708 19	Ø 284 mm					
1.4	02/12→	88 / 120										
1.4 CNG	02/12→	88 / 120	Ate		2472701	[+] 24727 20						
1.6 CDTI	02/12→	66 / 90										
1.6 CDTI	02/12→	74 / 101	Bos		82054200		Ø 284 mm					
1.6 CDTI	02/12→	77 / 105										
2.0 CDTI	02/12→	99 / 135	Ate		82076900							
					92046800	ø 284 x 22 x 43.5						
					92237600	ø 305 x 28 x 45.8						
				PRO	92046803	ø 284 x 22 x 43.5						
COMBO Box Body / Estate 10/01→												
		500100	Luc		2322501	[+] 23225 17		Luc		2341703	[+] 23417 15.2	⊕ rear disc brake
1.3 CDTI 16V	08/05→	51 / 69										
1.3 CDTI 16V	10/05→	55 / 75	Ate		2383201	[+] 23832 19.6	53000001→ ⊕ incr. payload	Luc		82060100		
1.4 16V	08/05→	66 / 90										
			Ate	epad	2383281	[+] 23832 19.6	53000001→ ⊕ incr. payload	Luc		82063300		
			Luc		82060200					91060100	ø 230 x 42	⊕ rear drum brake
			Ate		82032000		53000001→ ⊕ incr. payload		PRO	92092003	ø 240 x 10 x 42.7	⊕ rear disc brake
				PRO	92111103	ø 260 x 24 x 41			PRO	92124703	ø 264 x 10 x 42	⊕ rear disc brake
										94031500	ø 230 x 50	43000001→
		500200	Luc		2322501	[+] 23225 17		Luc		2341703	[+] 23417 15.2	⊕ rear disc brake
1.6	10/01→	64 / 87										
1.7 DI 16V	10/01→	48 / 65	Ate		2383201	[+] 23832 19.6	53000001→ ⊕ incr. payload	Luc		82060100		
1.7 DTI 16V	10/01→	55 / 75										
			Ate	epad	2383281	[+] 23832 19.6	53000001→ ⊕ incr. payload	Luc		82063300		
			Luc		82060200					91060100	ø 230 x 42	⊕ rear drum brake
			Ate		82032000		53000001→ ⊕ incr. payload		PRO	92092003	ø 240 x 10 x 42.7	⊕ rear disc brake
				PRO	92111103	ø 260 x 24 x 41			PRO	92124703	ø 264 x 10 x 42	⊕ rear disc brake
				PRO	92124603	ø 280 x 25 x 42.5	43000001→ ⊕ incr. payload			94031500	ø 230 x 50	43000001→
		500300	Ate		2383201	[+] 23832 19.6		Luc		2341703	[+] 23417 15.2	⊕ rear disc brake
1.6 CNG 16V	04/05→	71 / 97										
			Ate	epad	2383281	[+] 23832 19.6		Luc		82060100		
			Luc		82060200			Luc		82063300		
			Ate		82032000					91060100	ø 230 x 42	⊕ rear drum brake
				PRO	92124603	ø 280 x 25 x 42.5			PRO	92092003	ø 240 x 10 x 42.7	⊕ rear disc brake
									PRO	92124703	ø 264 x 10 x 42	⊕ rear disc brake
										94031500	ø 230 x 50	43000001→
		500400	Ate		2383201	[+] 23832 19.6	53000001→ ⊕ incr. payload	Luc		2341703	[+] 23417 15.2	⊕ rear disc brake
1.6 CNG 16V	06/06→	69 / 94										
			Ate	epad	2383281	[+] 23832 19.6	53000001→ ⊕ incr. payload	Luc		82060100		
			Luc		82060200			Luc		82063300		
			Ate		82032000		53000001→ ⊕ incr. payload			91060100	ø 230 x 42	⊕ rear drum brake

N - P

		kW / hp										
COMBO Box Body / Estate 10/01→												
1.6 CNG 16V	06/06→	500400 69 / 94		PRO	92124603	ø 280 x 25 x 42.5			PRO	92092003	ø 240 x 10 x 42.7	⊕ rear disc brake
									PRO	92124703	ø 264 x 10 x 42	⊕ rear disc brake
										94031500	ø 230 x 50	43000001→
1.7 CDTI 16V	12/04→	500500 74 / 101	Ate		2383201	[+] 23832 19.6		Luc		2341703	[+] 23417 15.2	⊕ rear disc brake
			Ate	epad	2383281	[+] 23832 19.6		Luc		82060100		
			Luc		82060200			Luc		82063300		
			Ate		82032000					91060100	ø 230 x 42	⊕ rear drum brake
				PRO	92091903	ø 280 x 25 x 42			PRO	92092003	ø 240 x 10 x 42.7	⊕ rear disc brake
									PRO	92092103	ø 264 x 10 x 42	
										94020300	ø 230,0 x 50.2	⊕ rear drum brake →36999999
COMBO Kasten/Kombi (X12) 02/12→ → COMBO Box Body / Estate (X12), Page 794												
COMBO Kasten/Kombi 10/01→ → COMBO Box Body / Estate, Page 794												
COMBO Tour (X12) 02/12→												
1.3 CDTI	02/12→	500600 66 / 90	Bos		2370802	[+] 23708 19	Ø 284 mm					
			Bos	epad	2370881	[+] 23708 19	Ø 284 mm					
			Ate		2472701	[+] 24727 20	Ø 305 mm					
					92046800	ø 284 x 22 x 43.5						
					92237600	ø 305 x 28 x 45.8						
				PRO	92046803	ø 284 x 22 x 43.5						
1.4	02/12→	500700 70 / 95	Bos		2370802	[+] 23708 19	Ø 284 mm			97034000		
1.4	02/12→	88 / 120										
1.4 CNG	02/12→	88 / 120	Bos	epad	2370881	[+] 23708 19	Ø 284 mm					
1.6 CDTI	02/12→	66 / 90										
1.6 CDTI	02/12→	74 / 101	Ate		2472701	[+] 24727 20						
1.6 CDTI	02/12→	77 / 105										
2.0 CDTI	02/12→	99 / 135	Bos		82054200		Ø 284 mm					
			Ate		82076900							
					92046800	ø 284 x 22 x 43.5						
					92237600	ø 305 x 28 x 45.8						
				PRO	92046803	ø 284 x 22 x 43.5						
COMBO Tour 08/01→												
1.3 CDTI 16V	10/04→	500800 51 / 69	Luc		2322501	[+] 23225 17		Luc		2341703	[+] 23417 15.2	⊕ rear disc brake
			Ate		2383201	[+] 23832 19.6	53000001→ ⊕ incr. payload	Luc		82060100		
			Ate	epad	2383281	[+] 23832 19.6	53000001→ ⊕ incr. payload	Luc		82063300		
			Luc		82060200					91060100	ø 230 x 42	⊕ rear drum brake
			Ate		82032000		53000001→ ⊕ incr. payload		PRO	92092003	ø 240 x 10 x 42.7	⊕ rear disc brake
				PRO	92111103	ø 260 x 24 x 41			PRO	92124703	ø 264 x 10 x 42	⊕ rear disc brake
										94020300	ø 230,0 x 50.2	⊕ rear drum brake →36999999
										94031500	ø 230 x 50	43000001→
1.3 CDTI 16V	10/05→	500900 55 / 75	Luc		2322501	[+] 23225 17		Luc		2341703	[+] 23417 15.2	⊕ rear disc brake
1.4	10/04→	66 / 90	Ate		2383201	[+] 23832 19.6	53000001→ ⊕ incr. payload	Luc		82060100		
			Ate	epad	2383281	[+] 23832 19.6	53000001→ ⊕ incr. payload	Luc		82063300		
			Luc		82060200					91060100	ø 230 x 42	⊕ rear drum brake
			Ate		82032000		53000001→ ⊕ incr. payload		PRO	92092003	ø 240 x 10 x 42.7	⊕ rear disc brake

N - P

		kW / hp											
COMBO Tour 08/01→													
		500900											
1.3 CDTI 16V	10/05→	55 / 75		PRO	92111103	ø 260 x 24 x 41			PRO	92124703	ø 264 x 10 x 42	⊕ rear disc brake
1.4	10/04→	66 / 90								94031500	ø 230 x 50	43000001→
		501000	Luc		2322501	[+] 23225 17			Luc	2341703	[+] 23417 15.2	⊕ rear disc brake
1.6	08/01→	62 / 84	Ate		2383201	[+] 23832 19.6	53000001→ ⊕ incr. payload		Luc	82060100		
			Ate	epad	2383281	[+] 23832 19.6	53000001→ ⊕ incr. payload		Luc	82063300		
			Luc		82060200					91060100	ø 230 x 42	⊕ rear drum brake
			Ate		82032000		53000001→ ⊕ incr. payload			92092003	ø 240 x 10 x 42.7	⊕ rear disc brake
				PRO	92111103	ø 260 x 24 x 41			PRO	92124703	ø 264 x 10 x 42	⊕ rear disc brake
				PRO	92124603	ø 280 x 25 x 42.5	43000001→ ⊕ incr. payload			94020300	ø 230,0 x 50.2	⊕ rear drum brake →36999999
		501100	Luc		2322501	[+] 23225 17			Luc	2341703	[+] 23417 15.2	⊕ rear disc brake
1.6	10/01→	64 / 87										
1.7 DI 16V	10/01→	48 / 65	Ate		2383201	[+] 23832 19.6	53000001→ ⊕ incr. payload		Luc	82060100		
1.7 DTI 16V	10/01→	55 / 75	Ate	epad	2383281	[+] 23832 19.6	53000001→ ⊕ incr. payload		Luc	82063300		
			Luc		82060200					91060100	ø 230 x 42	⊕ rear drum brake
			Ate		82032000		53000001→ ⊕ incr. payload			92092003	ø 240 x 10 x 42.7	⊕ rear disc brake
				PRO	92111103	ø 260 x 24 x 41			PRO	92124703	ø 264 x 10 x 42	⊕ rear disc brake
				PRO	92124603	ø 280 x 25 x 42.5	43000001→ ⊕ incr. payload			94031500	ø 230 x 50	43000001→
		501200	Ate		2383201	[+] 23832 19.6			Luc	2341703	[+] 23417 15.2	⊕ rear disc brake
1.6 CNG	04/05→	71 / 97										
1.6 CNG	06/06→	69 / 94	Ate	epad	2383281	[+] 23832 19.6			Luc	82060100		
			Luc		82060200				Luc	82063300		
			Ate		82032000					91060100	ø 230 x 42	⊕ rear drum brake
				PRO	92124603	ø 280 x 25 x 42.5			PRO	92092003	ø 240 x 10 x 42.7	⊕ rear disc brake
									PRO	92124703	ø 264 x 10 x 42	⊕ rear disc brake
										94020300	ø 230,0 x 50.2	⊕ rear drum brake →36999999
										94031500	ø 230 x 50	43000001→
		501300	Luc		2322501	[+] 23225 17			Luc	2341703	[+] 23417 15.2	⊕ rear disc brake
1.7 CDTI 16V	12/04→	74 / 101	Ate		2383201	[+] 23832 19.6	53000001→ ⊕ incr. payload		Luc	82060100		
			Ate	epad	2383281	[+] 23832 19.6	53000001→ ⊕ incr. payload		Luc	82063300		
			Luc		82060200					91060100	ø 230 x 42	⊕ rear drum brake
			Ate		82032000		53000001→ ⊕ incr. payload			92092003	ø 240 x 10 x 42.7	⊕ rear disc brake
				PRO	92091903	ø 280 x 25 x 42			PRO	92124703	ø 264 x 10 x 42	⊕ rear disc brake
										94020300	ø 230,0 x 50.2	⊕ rear drum brake →36999999
CORSA B (73_, 78_, 79_) 03/93→09/00													
		501400	Ate		2054701	[o] 20547 16.8				91044800	ø 200 x 28	
1.0 i 12V	11/96→09/00	40 / 54										
1.2 i	03/93→09/00	33 / 45	Ate		82030600					97008200		
1.5 D	03/93→09/00	37 / 50										
1.5 TD	03/93→09/00	49 / 67	Ate		82062900					84044801	bore ø 19 ø 200 x 28	
1.7 D	02/96→09/00	44 / 60										
				PRO	92020903	ø 236 x 12.5 x 41				94009900	ø 200,0 x 34	⊖ ABS
										94022300	ø 200,0 x 34	⊕ ABS
		501500	Ate		2054701	[o] 20547 16.8				91044800	ø 200 x 28	
1.2 i	03/93→09/00	33 / 45										
			Ate		82030600					97008200		N 4000001→
			Ate		82062900					84044801	bore ø 19 ø 200 x 28	

		kW / hp										
CORSA B (73_, 78_, 79_) 03/93→09/00												
1.2 i	03/93→09/00	501500 33 / 45		PRO	92020903	ø 236 x 12.5 x 41				94009900	ø 200,0 x 34	⊖ ABS
										94022300	ø 200,0 x 34	⊕ ABS
1.2 i 16V	03/98→09/00	501600 48 / 65	Ate		2054701	[o] 20547 16.8				91044800	ø 200 x 28	
			Ate		82030600					97008200		
			Ate		82062900					84044801	bore ø 19 ø 200 x 28	
				PRO	92020903	ø 236 x 12.5 x 41				94009900	ø 200,0 x 34	⊖ ABS
				PRO	92029603	ø 236 x 20 x 41	⊕ sports susp. ⊕ air cond.			94022300	ø 200,0 x 34	⊕ ABS
1.4 i	03/93→09/00	501700 40 / 54	Ate		2054701	[o] 20547 16.8				91044800	ø 200 x 28	
			Ate		82030600					97008200		
					92005400	ø 238 x 11 x 55.5	⊕ man.			84044801	bore ø 19 ø 200 x 28	
				PRO	92029603	ø 236 x 20 x 41	⊕ autom.			94009900	ø 200,0 x 34	⊖ ABS
										94022300	ø 200,0 x 34	⊕ ABS
1.4 i	03/93→09/00	501800 44 / 60	Ate		2054701	[o] 20547 16.8				91044800	ø 200 x 28	
			Ate		82030600					97008200		
			Ate		82062900					84044801	bore ø 19 ø 200 x 28	
				PRO	92020903	ø 236 x 12.5 x 41				94009900	ø 200,0 x 34	⊖ ABS
				PRO	92029603	ø 236 x 20 x 41				94022300	ø 200,0 x 34	⊕ ABS
1.4 i 16V 1.4 Si	09/94→09/00 03/93→09/00	501900 66 / 90 60 / 82	Ate		2054701	[o] 20547 16.8				91044800	ø 200 x 28	
			Ate		82030600					97008200		
			Ate		82062900					84044801	bore ø 19 ø 200 x 28	
				PRO	92029603	ø 236 x 20 x 41				94009900	ø 200,0 x 34	⊖ ABS
										94022300	ø 200,0 x 34	⊕ ABS
1.4 i 16V	09/94→09/00	502000 67 / 91	Ate		2054701	[o] 20547 16.8				94009900	ø 200,0 x 34	⊖ ABS
				PRO	92029603	ø 236 x 20 x 41				94022300	ø 200,0 x 34	⊕ ABS
1.4 i 16V	08/97→09/00	502100 63 / 86	Ate		2054701	[o] 20547 16.8				91044800	ø 200 x 28	
			Ate		82030600					97008200		
			Ate		82062900					94009900	ø 200,0 x 34	⊖ ABS
				PRO	92029603	ø 236 x 20 x 41				94022300	ø 200,0 x 34	⊕ ABS
1.6 GSI 16V 1.6 i 16V	03/93→09/00 09/94→09/00	502200 80 / 109 78 / 106	Ate		2054701	[o] 20547 16.8				91044800	ø 200 x 28	
			Ate		82030600					97008200		
			Ate		82062900					84044801	bore ø 19 ø 200 x 28	
				PRO	92056503	ø 256 x 20 x 41				94009900	ø 200,0 x 34	⊖ ABS
										94022300	ø 200,0 x 34	⊕ ABS
1.6 i 16V	08/97→09/00	502300 74 / 100	Ate		2054701	[o] 20547 16.8				91044800	ø 200 x 28	
			Ate		82030600					97008200		
			Ate		82062900					94009900	ø 200,0 x 34	⊖ ABS
				PRO	92056503	ø 256 x 20 x 41				94022300	ø 200,0 x 34	⊕ ABS
CORSA B Box (73_) 08/99→09/00												
1.4 i 1.6 1.7 D	08/99→09/00 08/99→09/00 08/99→09/00	502400 44 / 60 71 / 97 44 / 60	Ate		2054701	[o] 20547 16.8				91044800	ø 200 x 28	
			Ate		82030600					97008200		

		kW / hp									
CORSA B Box (73_) 08/99→09/00											
502400			Ate		82062900				94009900	ø 200,0 x 34	⊖ ABS
1.4 i	08/99→09/00	44 / 60									
1.6	08/99→09/00	71 / 97		PRO	92020903	ø 236 x 12.5 x 41			94022300	ø 200,0 x 34	⊕ ABS
1.7 D	08/99→09/00	44 / 60									
				PRO	92029603	ø 236 x 20 x 41					
CORSA B Estate (F35) 01/99→											
502500			Ate		2054701	[o] 20547 16.8			91044800	ø 200 x 28	
1.4 i 16V	01/99→	66 / 90		PRO	92029603	ø 236 x 20 x 41			97008200		
1.7 D	01/99→	44 / 60							94009900	ø 200,0 x 34	
CORSA B Kasten (73_) 08/99→09/00 → CORSA B Box (73_), Page 797											
CORSA B Kombi (F35) 01/99→ → CORSA B Estate (F35), Page 798											
CORSA B STATION WAGON (F35) 01/99→ → CORSA B Estate (F35), Page 798											
CORSA C (F08, F68) 09/00→12/09											
502600			Luc		2322501	[+] 23225 17		Luc	2341703	[+] 23417 15.2	
1.0	09/00→12/09	43 / 58									
1.0	06/03→12/09	44 / 60	Luc		82060200				91058100	ø 200 x 29	⊖ ABS
1.2	09/00→12/09	55 / 75									
1.2 Twinport	07/04→12/09	59 / 80		PRO	92111303	ø 240 x 11 x 41	⊖ ABS		91058200	ø 200 x 46	⊕ ABS
				PRO	92111403	ø 240 x 20 x 41	⊕ ABS		84058100	bore ø 19 ø 200 x 28	⊖ ABS
									84058200	bore ø 19 ø 200 x 45	⊕ ABS
									92111003	ø 240 x 10.2 x 40.5	
									94024100	ø 200,0 x 36	⊖ ABS
									94024200	ø 200,0 x 52	⊕ ABS
502700			Luc		2322501	[+] 23225 17		Luc	2341703	[+] 23417 15.2	
1.3 CDTI	06/03→12/09	51 / 70									
1.4 Twinport	06/03→12/09	66 / 90	Luc		82060200				91058100	ø 200 x 29	⊖ ABS
1.6	05/03→12/09	69 / 92									
1.7 DTI	09/00→12/09	55 / 75		PRO	92111103	ø 260 x 24 x 41			91058200	ø 200 x 46	⊕ ABS
									84058100	bore ø 19 ø 200 x 28	⊖ ABS
									84058200	bore ø 19 ø 200 x 45	⊕ ABS
									92111003	ø 240 x 10.2 x 40.5	
									94024100	ø 200,0 x 36	⊖ ABS
									94024200	ø 200,0 x 52	⊕ ABS
502800			Luc		2322501	[+] 23225 17		Luc	2328404	[+] 23284 14	
1.4	09/00→12/09	66 / 90									
			Luc		82060200				91058100	ø 200 x 29	⊖ ABS
				PRO	92111103	ø 260 x 24 x 41			91058200	ø 200 x 46	⊕ ABS
									84058100	bore ø 19 ø 200 x 28	⊖ ABS
									84058200	bore ø 19 ø 200 x 45	⊕ ABS
									92111003	ø 240 x 10.2 x 40.5	
									94024100	ø 200,0 x 36	⊖ ABS
									94024200	ø 200,0 x 52	⊕ ABS
502900			Luc		2322501	[+] 23225 17	LUCAS -brake →43999999	Luc	2341702	[–] 23417 15.2	⊕ rear disc brake
1.6	09/00→12/09	62 / 84									
			Ate		2383201	[+] 23832 19.6	43033899→ 74000001→ ⊕ incr. payload	Luc	2341781	[–] 23417 15.2	⊕ rear disc brake
			Ate	epad	2383281	[+] 23832 19.6	43033899→ 74000001→ ⊕ incr. payload	Luc	2328404	[+] 23284 14	⊕ rear disc brake optional
			Ate		82032000		43033899→ 74000001→ ⊕ incr. payload		91044900	ø 200 x 45	⊕ ABS ⊕ rear drum brake
				PRO	92111103	ø 260 x 24 x 41	→43033898 →44		91058100	ø 200 x 29	⊖ ABS ⊕ rear drum brake
				PRO	92124603	ø 280 x 25 x 42.5	43033899→ 74000001→ ⊕ incr. payload		84058100	bore ø 19 ø 200 x 28	⊖ ABS

N - P

		kW / hp											
CORSA C (F08, F68) 09/00→12/09													
1.6	09/00→12/09	502900 62 / 84			**TPM0007**		⊕ rim 5 hole			**84058200**	bore ø 19 ø 200 x 45	⊕ ABS
									PRO	**92111003**	ø 240 x 10.2 x 40.5	→63999999 →64999999 →66999999 ⊕ rear disc brake
									PRO	**92124703**	ø 264 x 10 x 42	⊕ rear disc brake
										94024100	ø 200,0 x 36	⊖ ABS ⊕ rear drum brake
										94024200	ø 200,0 x 52	⊕ ABS ⊕ rear drum brake
1.7 CDTI	06/03→12/09	503000 74 / 100	Ate		**2383201**	[+] 23832 19.6		Luc		**2341703**	[+] 23417 15.2	
			Ate	epad	**2383281**	[+] 23832 19.6		Luc		**82060100**		
			Ate		**82032000**			Luc		**82063300**		
			Ate		**82062900**				PRO	**92092103**	ø 264 x 10 x 42	
				PRO	**92091903**	ø 280 x 25 x 42						
1.7 DI	09/00→12/09	503100 48 / 65	Luc		**2322501**	[+] 23225 17		Luc		**2341703**	[+] 23417 15.2	
			Luc		**82060200**					**91058100**	ø 200 x 29	⊖ ABS
				PRO	**92111103**	ø 260 x 24 x 41				**91058200**	ø 200 x 46	⊕ ABS
				PRO	**92111403**	ø 240 x 20 x 41				**84058100**	bore ø 19 ø 200 x 28	⊖ ABS
										84058200	bore ø 19 ø 200 x 45	⊕ ABS
									PRO	**92111003**	ø 240 x 10.2 x 40.5	
										94024100	ø 200,0 x 36	⊖ ABS
										94024200	ø 200,0 x 52	⊕ ABS
1.8	09/00→12/09	503200 92 / 125	Luc		**2322501**	[+] 23225 17		Luc		**2328404**	[+] 23284 14	
			Luc		**82060200**			Luc		**82060100**		
				PRO	**92111103**	ø 260 x 24 x 41		Luc		**82063300**		
									PRO	**92111003**	ø 240 x 10.2 x 40.5	
1.8	01/02→12/09	503300 79 / 107	Luc		**2322501**	[+] 23225 17		Luc		**2341703**	[+] 23417 15.2	⊕ rear disc brake
				PRO	**92111103**	ø 260 x 24 x 41				**91058100**	ø 200 x 29	⊖ ABS ⊕ rear drum brake
				PRO	**92124603**	ø 280 x 25 x 42.5				**84058100**	bore ø 19 ø 200 x 28	⊖ ABS ⊕ rear drum brake
					TPM0007		⊕ rim 5 hole		PRO	**92111003**	ø 240 x 10.2 x 40.5	→63999999 →64999999 →66999999 ⊕ rear disc brake
									PRO	**92124703**	ø 264 x 10 x 42	
										94020300	ø 230,0 x 50.2	→33999999 →34 ⊕ rear drum brake
										94031500	ø 230 x 50	43000001→ 74000001→ ⊕ rear drum brake
CORSA C Box (F08, W5L) 09/00→													
1.2	07/05→	503400 59 / 80	Luc		**2322501**	[+] 23225 17				**91058100**	ø 200 x 29	⊖ ABS
1.2 16V	09/00→	55 / 75	Luc		**82060200**					**91058200**	ø 200 x 46	⊕ ABS
1.3 CDTI 16V	08/05→	51 / 69		PRO	**92111303**	ø 240 x 11 x 41	⊖ ABS			**84058100**	bore ø 19 ø 200 x 28	⊖ ABS
1.4	08/03→	66 / 90		PRO	**92111103**	ø 260 x 24 x 41				**84058200**	bore ø 19 ø 200 x 45	⊕ ABS
1.6	08/05→	71 / 97		PRO	**92111403**	ø 240 x 20 x 41	⊕ ABS			**94024100**	ø 200,0 x 36	⊖ ABS
1.7 CDTi	08/03→	74 / 101								**94024200**	ø 200,0 x 52	⊕ ABS
1.7 DI 16V	09/00→	48 / 65										
1.7 DTI 16V	09/00→	55 / 75										
CORSA C Kasten (F08, W5L) 09/00→ → CORSA C Box (F08, W5L), Page 799													
CORSA CLASSIC Saloon 08/94→12/05													
1.4	08/94→07/02	503500 44 / 60	Ate		**2054701**	[o] 20547 16.8				**91044800**	ø 200 x 28	
			Ate		**82030600**					**97008200**		
			Ate		**82062900**					**84044801**	bore ø 19 ø 200 x 28	

N - P

		kW / hp										
CORSA CLASSIC Saloon 08/94→12/05												
503500												
1.4	08/94→07/02	44 / 60		PRO 92020903	ø 236 x 12.5 x 41			94009900	ø 200,0 x 34	⊖ ABS
				PRO 92029603	ø 236 x 20 x 41			94022300	ø 200,0 x 34	⊕ ABS
503600			Luc	2322501	[+] 23225 17		Luc	2341702	[–] 23417 15.2	
1.4	07/00→05/01	66 / 90		PRO 92111103	ø 260 x 24 x 41		Luc epad	2341781	[–] 23417 15.2	
				TPM0007		n. of holes: 5	Luc	2328404	[+] 23284 14	optional
							Luc	2341703	[+] 23417 15.2	
								PRO 92111003	ø 240 x 10.2 x 40.5	
503700			Luc	2322501	[+] 23225 17		Luc	2341702	[–] 23417 15.2	
1.4	07/00→12/03	66 / 90		PRO 92111103	ø 260 x 24 x 41		Luc epad	2341781	[–] 23417 15.2	
				TPM0007		n. of holes: 5	Luc	2328404	[+] 23284 14	optional
							Luc	2341703	[+] 23417 15.2	
								PRO 92111003	ø 240 x 10.2 x 40.5	→63999999, 64999999 →66999999
								PRO 92124703	ø 264 x 10 x 42	
503800			Luc	2322501	[+] 23225 17		Luc	2341703	[+] 23417 15.2	⊕ rear disc brake
1.8	01/02→12/05	79 / 107		PRO 92111103	ø 260 x 24 x 41			91058100	ø 200 x 29	⊖ ABS ⊕ rear drum brake
				PRO 92124603	ø 280 x 25 x 42.5			84058100	bore ø 19 ø 200 x 28	⊖ ABS ⊕ rear drum brake
				TPM0007		⊕ rim 5 hole		PRO 92111003	ø 240 x 10.2 x 40.5	→63999999 →64999999 →66999999 ⊕ rear disc brake
								PRO 92124703	ø 264 x 10 x 42	
								94020300	ø 230,0 x 50.2	→33999999 →34 ⊕ rear drum brake
								94031500	ø 230 x 50	43000001→ 74000001→ ⊕ rear drum brake
CORSA CLASSIC Stufenheck 08/94→12/05 → CORSA CLASSIC Saloon, Page 799										
CORSA D 07/06→										
503900			Bos	2398202	[+] 23982 17.8			91065300	ø 203.2 x 38	⊕ 3-door
1.0	07/06→	44 / 60	Bos	82054300				91065400	ø 228.6 x 42	⊕ 5-door
1.0	01/10→	48 / 65		PRO 92164603	ø 257 x 12 x 40.5			97031500		⊕ 5-door
				PRO 92145703	ø 257 x 22 x 40.6			97031600		⊕ 3-door
				TPM0008			Lkh	84065300	bore ø 19 ø 203.2 x 38	⊕ 3-door
								84065402	bore ø 19 ø 228.6 x 42	⊕ 5-door
								94027200	ø 228,3 x 47.5	⊕ 5-door
								94027600	ø 203,2 x 48	⊕ 3-door
504000			Bos	2398202	[+] 23982 17.8			91065300	ø 203.2 x 38	⊕ 3-door
1.2	07/06→	59 / 80	Bos	82054300				91065400	ø 228.6 x 42	⊕ 5-door
1.2	06/10→	51 / 69		PRO 92145703	ø 257 x 22 x 40.6			97031500		⊕ 5-door
1.2	06/10→	63 / 86		TPM0008				97031600		⊕ 3-door
1.2 LPG	09/09→	59 / 80					Lkh	84065300	bore ø 19 ø 203.2 x 38	⊕ 3-door
1.2 LPG	06/11→	61 / 83						84065402	bore ø 19 ø 228.6 x 42	⊕ 5-door
1.2 LPG	08/11→	63 / 86						94027200	ø 228,3 x 47.5	
1.4 LPG	07/06→	66 / 90						94027600	ø 203,2 x 48	
1.4 LPG	09/09→	64 / 87								
504100			Bos	2398101	[+] 23981 19.2	Ø 284 mm		91065400	ø 228.6 x 42	
1.3 CDTI	07/06→	55 / 75	Bos	2398202	[+] 23982 17.8	Ø 257 mm		97031500		
			Bos	82054200		Ø 284 mm				

		kW / hp									
CORSA D 07/06→											
1.3 CDTI	07/06→	504100 55 / 75	Bos		82054300		Ø 257 mm		84065402	bore ø 19 ø 228.6 x 42	
				PRO	92145703	ø 257 x 22 x 40.6	94219782→ 96093346→		94027200	ø 228,3 x 47.5	
				PRO	92145803	ø 284 x 22 x 43.2	A4999999→ A6999999→				
					TPM0008						
1.3 CDTI 1.3 CDTI	07/06→ 06/10→	504200 66 / 90 70 / 95	Bos		2398101	[+] 23981 19.2	Ø 284 mm		91065400	ø 228.6 x 42	
			Bos		2398202	[+] 23982 17.8	Ø 257 mm		97031500		
			Bos		82054200		Ø 284 mm		84065402	bore ø 19 ø 228.6 x 42	
			Bos		82054300		Ø 257 mm		94027200	ø 228,3 x 47.5	
				PRO	92145703	ø 257 x 22 x 40.6	94219782→ 96093346→				
				PRO	92145803	ø 284 x 22 x 43.2	→A4999999 →A6999999				
					TPM0008						
1.4 1.4 1.4	07/06→ 09/09→ 06/10→	504300 66 / 90 64 / 87 74 / 100	Bos		2398202	[+] 23982 17.8			91065400	ø 228.6 x 42	
			Bos		82054300				97031500		
				PRO	92145703	ø 257 x 22 x 40.6			84065402	bore ø 19 ø 228.6 x 42	
					TPM0008				94027200	ø 228,3 x 47.5	
1.4 1.7 CDTI	07/12→ 06/10→	504400 88 / 120 96 / 130	Bos		2455001	[+] 24550 20.2		Bos	2434903	[–] 24349 17.5	
			Bos		82054200			Bos	82054300		
					92156400	ø 278 x 26 x 43.2			PRO 92186403	ø 264 x 10 x 40.6	
					TPM0007				TPM0008		
1.6 T 1.6 Turbo 1.6 Turbo	02/07→ 02/07→ 02/07→	504500 132 / 180 110 / 150 141 / 192	Ate		2383201	[+] 23832 19.6		Bos	2434903	[–] 24349 17.5	
			Ate	epad	2383281	[+] 23832 19.6		Bos	82054300		
			Ate		82032000				PRO 92186403	ø 264 x 10 x 40.6	
			Ate		82062900						
				PRO	92110903	ø 308 x 25 x 42					
					TPM0007						
1.6 Turbo	06/11→	504600 155 / 211						Bos	2434903	[–] 24349 17.5	
								Bos	82054300		
									PRO 92186403	ø 264 x 10 x 40.6	
									TPM0008		
1.7 CDTI	07/06→	504700 92 / 125	Bos		2455001	[+] 24550 20.2		Bos	2434903	[–] 24349 17.5	
			Bos		82054200			Bos	82054300		
					92156400	ø 278 x 26 x 43.2			PRO 92186403	ø 264 x 10 x 40.6	
					TPM0007						
CORSA D Van 07/06→											
1.0 1.0 1.2 1.2	07/06→ 01/10→ 07/09→ 06/10→	504800 44 / 60 48 / 65 59 / 80 51 / 69	Bos		2398202	[+] 23982 17.8	74012346→ 76012346→	Bos	2434903	[–] 24349 17.5	⊕ rear disc brake
			Bos		82054300		74012346→ 76012346→	Bos	82054300		⊕ rear disc brake
				PRO	92145703	ø 257 x 22 x 40.6	94219782→ 96093346→		91065300	ø 203.2 x 38	A4000001→ A6000001→ ⊕ rear drum brake
					TPM0008				PRO 92186403	ø 264 x 10 x 40.6	⊕ rear disc brake
									TPM0008		
									94027600	ø 203,2 x 48	⊕ rear drum brake

N - P

		kW / hp										
CORSA D Van 07/06→												
		504900	Bos		**2398202**	[+] 23982 17.8		Bos		**2434903**	[–] 24349 17.5	
1.2	06/10→	63 / 86	Bos		**82054300**			Bos		**82054300**		
				PRO	**92145703**	ø 257 x 22 x 40.6				**91065300**	ø 203.2 x 38	
					TPM0008					**91065400**	ø 228.6 x 42	
										97031500		Ø 228,6 mm
										97031600		Ø 203 mm
								Lkh		**84065300**	bore ø 19 ø 203.2 x 38	
										84065402	bore ø 19 ø 228.6 x 42	
									PRO	**92186403**	ø 264 x 10 x 40.6	
										TPM0008		
										94027200	ø 228,3 x 47.5	
										94027600	ø 203,2 x 48	
		505000	Bos		**2398101**	[+] 23981 19.2	Ø 284 mm	Bos		**2434903**	[–] 24349 17.5	⊕ rear disc brake
1.3 CDTI	07/06→	55 / 75	Bos		**2398202**	[+] 23982 17.8	74012346→ 76012346→ Ø 257 mm	Bos		**82054300**		⊕ rear disc brake
			Bos		**82054200**		Ø 284 mm			**91065300**	ø 203.2 x 38	A40000001→ A60000001→ ⊕ Ecoflex ⊕ rear drum brake
			Bos		**82054300**		74012346→ 76012346→ Ø 257 mm			**91065400**	ø 228.6 x 42	A4000001→ 60000001→ ⊖ Ecoflex ⊕ rear drum brake
				PRO	**92145703**	ø 257 x 22 x 40.6	94219782→ 96093346→		PRO	**92186403**	ø 264 x 10 x 40.6	⊕ rear disc brake
				PRO	**92145803**	ø 284 x 22 x 43.2	→A4999999 →A6999999			**TPM0008**		
					TPM0008					**94027200**	ø 228,3 x 47.5	⊖ Ecofelx ⊕ rear drum brake
										94027600	ø 203,2 x 48	⊕ Ecoflex ⊕ rear drum brake
		505100	Bos		**2398101**	[+] 23981 19.2		Bos		**2434903**	[–] 24349 17.5	⊕ rear disc brake
1.3 CDTI	07/06→	66 / 90	Bos		**82054200**			Bos		**82054300**		⊕ rear disc brake
				PRO	**92145803**	ø 284 x 22 x 43.2	→A499999 →A6999999			**91065400**	ø 228.6 x 42	A4000001→ A6000001→ ⊕ rear drum brake
					TPM0008				PRO	**92186403**	ø 264 x 10 x 40.6	⊕ rear disc brake
										TPM0008		
										94027200	ø 228,3 x 47.5	⊕ rear drum brake
		505200	Bos		**2398101**	[+] 23981 19.2	Ø 284 mm	Bos		**2434903**	[–] 24349 17.5	⊕ rear disc brake
1.3 CDTI	06/10→	70 / 95	Bos		**2398202**	[+] 23982 17.8	74012346→ 76012346→ Ø 257 mm	Bos		**82054300**		⊕ rear disc brake
			Bos		**82054200**		Ø 284 mm			**91065400**	ø 228.6 x 42	A4000001→ A6000001→ ⊕ rear drum brake
			Bos		**82054300**		74012346→ 76012346→ Ø 257 mm		PRO	**92186403**	ø 264 x 10 x 40.6	⊕ rear disc brake
				PRO	**92145703**	ø 257 x 22 x 40.6	94219782→ 96093346→			**TPM0008**		
				PRO	**92145803**	ø 284 x 22 x 43.2	A4999999→ A6999999→			**94027200**	ø 228,3 x 47.5	⊕ rear drum brake
					TPM0008							
CORSA E 09/14→												
		505300	Ate		**2383201**	[+] 23832 19.6	16'' -brake		PRO	**92186403**	ø 264 x 10 x 40.6	16'' -brake
1.0	09/14→	66 / 90										
1.0	09/14→	85 / 115	Ate		**2383281**	[+] 23832 19.6	16'' -brake					
1.2	09/14→	51 / 69		epad								
1.3 CDTI	09/14→	55 / 75										
1.3 CDTI	09/14→	70 / 95	Ate		**82032000**		15''/16'' -brake					
1.4	09/14→	66 / 90										
1.4 Turbo	09/14→	74 / 101		PRO	**92110903**	ø 308 x 25 x 42	16'' -brake					
				PRO	**92145703**	ø 257 x 22 x 40.6	14'' -brake					
				PRO	**92145803**	ø 284 x 22 x 43.2	15'' -brake					

		kW / hp											
CORSA E 09/14→													
		505300											
1.0	09/14→	66 / 90		TPM0007		16" -brake							
1.0	09/14→	85 / 115											
1.2	09/14→	51 / 69											
1.3 CDTI	09/14→	55 / 75											
1.3 CDTI	09/14→	70 / 95											
1.4	09/14→	66 / 90											
1.4 Turbo	09/14→	74 / 101											
CORSA SWING _ STATION WAGON (F35) 01/99→ → CORSA B Estate (F35), Page 798													
FRONTERA B (6B_) 10/98→													
		505400	Ake	2325001	[o] 23250 16.5	⊕ on-board comp.		Sum	2187503	[+] 21875 15.8			
2.2 DTI	09/02→	88 / 120	Ake	2184501	[+] 21845 16.5	⊖ on-board comp.		Sum	82033800				
3.2 i (6B1VF, 6B1_6)	10/98→	151 / 205	Ake	82033700					92091600	ø 313 x 18 x 80			
				92091400	ø 280 x 26 x 36	⊕ ABS			91059200	ø 210 x 32	→2V599999		
		505500	Ake	2325001	[o] 23250 16.5	⊕ on-board comp.		Sum	2187503	[+] 21875 15.8			
2.2 DTI (6B_ZC, 6B_VF, 6B_66, 6B_76)	10/98→09/02	85 / 116	Ake	2184501	[+] 21845 16.5	⊖ on-board comp.		Sum	82033800				
2.2 i (6B_ZC, 6B_VF, 6B_66, 6B_76)	10/98→	100 / 136	Ake	82033700					92091600	ø 313 x 18 x 80			
				92091400	ø 280 x 26 x 36	⊕ ABS			91059200	ø 210 x 32	3V500001→		
GT Cabriolet 06/07→ → GT Convertible, Page 803													
GT Convertible 06/07→													
		505600	Bos	2479301	[+] 24793 19.5			Ate	2413701	[–] 24137 16.7			
2.0	06/07→	194 / 264	Bos	82513200				Ate epad	2413781	[–] 24137 16.7			
INSIGNIA 07/08→													
		505700	Man	2441501	[+] 24415 19.1			TRW	2442101	[+] 24421 17.3			
1.4	04/11→	103 / 140											
1.4 LPG	07/12→	103 / 140	Man	82503800					82513400				
1.6	07/08→	85 / 116											
1.8	07/08→	103 / 140		92186903	ø 296 x 30 x 51				92222903	ø 292 x 12 x 48			
2.0 CDTI	07/08→	81 / 110											
2.0 CDTI	07/08→	96 / 131											
2.0 CDTI	03/12→	88 / 120											
		505800	Man	2441201	[+] 24412 19.1	17" -brake		TRW	2442102	[+] 24421 17.3			
1.6 SIDI	03/13→	125 / 170											
1.6 Turbo	07/08→	132 / 180	TRW	2441801	[+] 24418 17.2	17+" -brake		Luc	82503900				
2.0 E85 Turbo	09/10→	162 / 220											
2.0 Turbo	07/08→	162 / 220	Man	82503800					92187303	ø 315 x 23 x 48			
2.0 Turbo 4x4	07/08→	162 / 220											
				92187003	ø 321 x 30 x 50.9	17" -brake							
				92187103	ø 337 x 30 x 50.9	17+" -brake							
		505900	Man	2441201	[+] 24412 19.1			TRW	2442102	[+] 24421 17.3			
2.0 Biturbo CDTI	07/08→	140 / 190											
2.0 Biturbo CDTI	01/12→	143 / 195	Man	82503800				Luc	82503900				
2.0 Biturbo CDTI 4x4	05/09→	140 / 190											
2.0 Biturbo CDTI 4x4	01/12→	143 / 195		92187003	ø 321 x 30 x 50.9				92187303	ø 315 x 23 x 48			
2.0 Turbo 4x4	09/11→	184 / 250											
		506000	Man	2441201	[+] 24412 19.1	17" -brake		TRW	2442102	[+] 24421 17.3			
2.0 CDTI	07/08→	118 / 160											
2.0 CDTI 4x4	06/10→	118 / 160	Man	2441501	[+] 24415 19.1	16" -brake		Luc	82503900				
			TRW	2441801	[+] 24418 17.2	17+" -brake			92187303	ø 315 x 23 x 48			
			Man	82503800									
				92186903	ø 296 x 30 x 51	16" -brake							
				92187003	ø 321 x 30 x 50.9	17" -brake							
				92187103	ø 337 x 30 x 50.9	17+" -brake							
		506100	Man	2441201	[+] 24412 19.1	17" -brake		TRW	2442101	[+] 24421 17.3	16" -brake B1000001→		
2.0 CDTI	07/13→	103 / 140											
2.0 CDTI	07/13→	120 / 163	Man	2441501	[+] 24415 19.1	16" -brake		TRW	2442102	[+] 24421 17.3	17"/17+"/18+" -brake		
2.0 CDTI 4x4	07/13→	120 / 163	TRW	2441801	[+] 24418 17.2	17+" -brake			92222903	ø 292 x 12 x 48	16" -brake A1000001→		
				92186903	ø 296 x 30 x 51	16" -brake A1000001→			92187303	ø 315 x 23 x 48	17"/17+"/18+" -brake C1000001→		
				92187003	ø 321 x 30 x 50.9	17" -brake A1000001→							

N - P

		kW / hp										
INSIGNIA 07/08→												
		506200	Man		2441201	[+] 24412 19.1	17" -brake	TRW		2442101	[+] 24421 17.3	
2.0 Turbo	04/14→	184 / 250	Man		2441501	[+] 24415 19.1	16" -brake		PRO	92222903	ø 292 x 12 x 48	16" -brake
			TRW		2441801	[+] 24418 17.2	17+" -brake		PRO	92187303	ø 315 x 23 x 48	17" 17+" -brake
				PRO	92186903	ø 296 x 30 x 51	16" -brake					
				PRO	92187003	ø 321 x 30 x 50.9	17" -brake					
				PRO	92187103	ø 337 x 30 x 50.9	17+" -brake →A1999999					
		506300	TRW		2441801	[+] 24418 17.2		TRW		2442102	[+] 24421 17.3	
2.8 V6 Turbo 4x4	07/08→	191 / 260	Luc		82504200			Luc		82503900		
				PRO	92187103	ø 337 x 30 x 50.9			PRO	92187303	ø 315 x 23 x 48	
		506400	Bre		2332502	[+] 23325 16		TRW		2442102	[+] 24421 17.3	
2.8 V6 Turbo OPC 4x4	07/09→	239 / 325	Bre		82072400			Luc		82503900		
									PRO	92187303	ø 315 x 23 x 48	
INSIGNIA Saloon 07/08→												
		506500	Man		2441501	[+] 24415 19.1		TRW		2442101	[+] 24421 17.3	
1.4	04/11→	103 / 140										
1.4 LPG	07/12→	103 / 140	Man		82503800					82513400		
1.6	07/08→	85 / 116										
2.0 CDTI	07/08→	81 / 110										
2.0 CDTI	07/08→	96 / 131		PRO	92186903	ø 296 x 30 x 51			PRO	92222903	ø 292 x 12 x 48	
2.0 CDTI	03/12→	88 / 120										
		506600	Man		2441201	[+] 24412 19.1	17" -brake	TRW		2442102	[+] 24421 17.3	
1.6 SIDI	03/13→	125 / 170										
1.6 Turbo	01/09→	132 / 180	TRW		2441801	[+] 24418 17.2	17+" -brake	Luc		82503900		
1.8	07/08→	103 / 140										
2.0 Turbo 4x4	07/08→	162 / 220										
2.0 Turbo E85	07/08→	162 / 220	Man		82503800				PRO	92187303	ø 315 x 23 x 48	
				PRO	92187003	ø 321 x 30 x 50.9	17" -brake					
				PRO	92187103	ø 337 x 30 x 50.9	17+" -brake					
		506700	Man		2441201	[+] 24412 19.1		TRW		2442102	[+] 24421 17.3	
2.0 Biturbo CDTI	07/08→	140 / 190										
2.0 Biturbo CDTI	01/12→	143 / 195	Man		82503800			Luc		82503900		
2.0 Biturbo CDTI 4x4	07/08→	140 / 190										
2.0 Biturbo CDTI 4x4	01/12→	143 / 195										
2.0 Turbo	07/08→	162 / 220		PRO	92187003	ø 321 x 30 x 50.9			PRO	92187303	ø 315 x 23 x 48	
2.0 Turbo 4x4	09/11→	184 / 250										
		506800	Man		2441201	[+] 24412 19.1	17" -brake	TRW		2442102	[+] 24421 17.3	
2.0 CDTI	07/08→	118 / 160										
2.0 CDTI 4x4	06/10→	118 / 160	Man		2441501	[+] 24415 19.1	16" -brake	Luc		82503900		
			TRW		2441801	[+] 24418 17.2	17+" -brake		PRO	92187303	ø 315 x 23 x 48	
			Man		82503800							
				PRO	92186903	ø 296 x 30 x 51	16" -brake					
				PRO	92187003	ø 321 x 30 x 50.9	17" -brake					
				PRO	92187103	ø 337 x 30 x 50.9	17+" -brake					
		506900	Man		2441201	[+] 24412 19.1	17" -brake	TRW		2442101	[+] 24421 17.3	16" -brake B1000001→
2.0 CDTI	07/13→	103 / 140										
2.0 CDTI	07/13→	120 / 163	Man		2441501	[+] 24415 19.1	16" -brake	TRW		2442102	[+] 24421 17.3	17"/17+"/18+" -brake
2.0 CDTI 4x4	07/13→	120 / 163										
			TRW		2441801	[+] 24418 17.2	17+" -brake		PRO	92222903	ø 292 x 12 x 48	16" -brake A1000001→
				PRO	92186903	ø 296 x 30 x 51	16" -brake A1000001→		PRO	92187303	ø 315 x 23 x 48	17"/17+"/18+" -brake C1000001→
				PRO	92187003	ø 321 x 30 x 50.9	17" -brake A1000001→					
		507000	Man		2441201	[+] 24412 19.1	17" -brake	TRW		2442101	[+] 24421 17.3	
2.0 Turbo	04/14→	184 / 250	Man		2441501	[+] 24415 19.1	16" -brake		PRO	92222903	ø 292 x 12 x 48	16" -brake
			TRW		2441801	[+] 24418 17.2	17+" -brake		PRO	92187303	ø 315 x 23 x 48	17" 17+" -brake
				PRO	92186903	ø 296 x 30 x 51	16" -brake					

→

		kW / hp											
INSIGNIA Saloon 07/08→													
507000													
2.0 Turbo	04/14→	184 / 250		PRO	92187003	ø 321 x 30 x 50.9	17" -brake						
				PRO	92187103	ø 337 x 30 x 50.9	17+" -brake →A1999999						
507100			TRW		2441801	[+] 24418 17.2		TRW		2442102	[+] 24421 17.3		
2.8 V6 Turbo 4x4	07/08→	191 / 260	Luc		82504200			Luc		82503900			
				PRO	92187103	ø 337 x 30 x 50.9			PRO	92187303	ø 315 x 23 x 48		
507200			Bre		2332502	[+] 23325 16		TRW		2442102	[+] 24421 17.3		
2.8 V6 Turbo OPC 4x4	07/09→	239 / 325	Bre		82072400			Luc		82503900			
									PRO	92187303	ø 315 x 23 x 48		
INSIGNIA Sports Tourer 07/08→													
507300			Man		2441201	[+] 24412 19.1		TRW		2442102	[+] 24421 17.3		
1.4	09/11→	103 / 140											
1.4 LPG	07/12→	103 / 140	Man		82503800			Luc		82503900			
1.6	07/08→	85 / 116		PRO	92187003	ø 321 x 30 x 50.9			PRO	92222903	ø 292 x 12 x 48		
									PRO	92187303	ø 315 x 23 x 48		
507400			Man		2441201	[+] 24412 19.1	17" -brake	TRW		2442102	[+] 24421 17.3		
1.6 SIDI	03/13→	125 / 170											
1.6 Turbo	01/09→	132 / 180	TRW		2441801	[+] 24418 17.2	17+" -brake	Luc		82503900			
2.0 E85 Turbo	09/10→	162 / 220											
2.0 Turbo	07/08→	162 / 220	Man		82503800				PRO	92187303	ø 315 x 23 x 48		
2.0 Turbo 4x4	07/08→	162 / 220		PRO	92187003	ø 321 x 30 x 50.9	17" -brake						
				PRO	92187103	ø 337 x 30 x 50.9	17+" -brake						
507500			Man		2441501	[+] 24415 19.1		TRW		2442101	[+] 24421 17.3		
1.8	07/08→	103 / 140											
2.0 CDTI	07/08→	81 / 110	Man		82503800					82513400			
2.0 CDTI	07/08→	96 / 131											
2.0 CDTI	03/12→	88 / 120		PRO	92186903	ø 296 x 30 x 51			PRO	92222903	ø 292 x 12 x 48		
507600			Man		2441201	[+] 24412 19.1		TRW		2442102	[+] 24421 17.3		
2.0 Biturbo CDTI	07/08→	140 / 190											
2.0 Biturbo CDTI	01/12→	143 / 195	Man		82503800			Luc		82503900			
2.0 Biturbo CDTI 4x4	07/08→	140 / 190											
2.0 Biturbo CDTI 4x4	01/12→	143 / 195		PRO	92187003	ø 321 x 30 x 50.9			PRO	92187303	ø 315 x 23 x 48		
2.0 Turbo 4x4	09/11→	184 / 250											
507700			Man		2441201	[+] 24412 19.1	17" -brake	TRW		2442102	[+] 24421 17.3		
2.0 CDTI	07/08→	118 / 160											
2.0 CDTI 4x4	06/10→	118 / 160	Man		2441501	[+] 24415 19.1	16" -brake	Luc		82503900			
			TRW		2441801	[+] 24418 17.2	17+" -brake		PRO	92187303	ø 315 x 23 x 48		
			Man		82503800								
				PRO	92186903	ø 296 x 30 x 51	16" -brake						
				PRO	92187003	ø 321 x 30 x 50.9	17" -brake						
				PRO	92187103	ø 337 x 30 x 50.9	17+" -brake						
507800			Man		2441201	[+] 24412 19.1	17" -brake	TRW		2442101	[+] 24421 17.3	16" -brake B1000001→	
2.0 CDTI	07/13→	103 / 140											
2.0 CDTI	07/13→	120 / 163	Man		2441501	[+] 24415 19.1	16" -brake	TRW		2442102	[+] 24421 17.3	17"/17+"/18+" -brake	
2.0 CDTI 4x4	07/13→	120 / 163											
			TRW		2441801	[+] 24418 17.2	17+" -brake		PRO	92222903	ø 292 x 12 x 48	16" -brake A1000001→	
				PRO	92186903	ø 296 x 30 x 51	16" -brake A1000001→		PRO	92187303	ø 315 x 23 x 48	17"/17+"/18+" -brake C1000001→	
				PRO	92187003	ø 321 x 30 x 50.9	17" -brake A1000001→						
507900			Man		2441201	[+] 24412 19.1	17" -brake	TRW		2442101	[+] 24421 17.3		
2.0 Turbo	04/14→	184 / 250											
			Man		2441501	[+] 24415 19.1	16" -brake		PRO	92222903	ø 292 x 12 x 48	16" -brake	
			TRW		2441801	[+] 24418 17.2	17+" -brake		PRO	92187303	ø 315 x 23 x 48	17" 17+" -brake	
				PRO	92186903	ø 296 x 30 x 51	16" -brake						

N - P

		kW / hp												
INSIGNIA Sports Tourer 07/08→														
507900														
2.0 Turbo	04/14→	184 / 250		PRO	92187003	ø 321 x 30 x 50.9	17" -brake							
				PRO	92187103	ø 337 x 30 x 50.9	17+" -brake →A1999999							
508000			TRW		2441801	[+] 24418 17.2			TRW		2442102	[+] 24421 17.3		
2.8 V6 Turbo 4x4	10/08→	191 / 260	Luc		82504200				Luc		82503900			
				PRO	92187103	ø 337 x 30 x 50.9				PRO	92187303	ø 315 x 23 x 48		
508100			Bre		2332502	[+] 23325 16			TRW		2442102	[+] 24421 17.3		
2.8 V6 Turbo OPC 4x4	07/09→	239 / 325	Bre		82072400				Luc		82503900			
										PRO	92187303	ø 315 x 23 x 48		
INSIGNIA Stufenheck 07/08→ → INSIGNIA Saloon, Page 804														
MERIVA 05/03→05/10														
508200			Ate		2383201	[+] 23832 19.6			Luc		2341703	[+] 23417 15.2		
1.3 CDTI	09/03→05/10	55 / 75												
1.3 CDTI	04/05→05/10	51 / 69	Ate	epad	2383281	[+] 23832 19.6			Luc		82060100			
1.6	01/06→05/10	77 / 105												
1.6 16V	05/03→01/06	74 / 100												
1.7 DTI	09/03→05/10	55 / 75	Ate		82032000				Luc		82063300			
1.8	05/03→05/10	92 / 125	Ate		82062900					PRO	92092103	ø 264 x 10 x 42	⊕ rim 5 hole	
				PRO	92091903	ø 280 x 25 x 42	⊕ rim 5 hole			PRO	92124703	ø 264 x 10 x 42	⊕ rim 4 hole	
				PRO	92124603	ø 280 x 25 x 42.5	⊕ rim 4 hole				TPM0008			
508300			Luc		2322501	[+] 23225 17	⊕ rim 4 hole		Luc		2341703	[+] 23417 15.2		
1.4 16V Twinport	07/04→05/10	66 / 90												
1.4 16V Twinport LPG	07/04→05/10	66 / 90	Ate		2383201	[+] 23832 19.6	⊕ rim 5 hole		Luc		82060100			
			Ate	epad	2383281	[+] 23832 19.6	⊕ rim 5 hole		Luc		82063300			
			Ate		82032000		⊕ rim 5 hole			PRO	92092003	ø 240 x 10 x 42.7	⊕ rim 4 hole	
			Luc		82063300					PRO	92092103	ø 264 x 10 x 42	⊕ rim 5 hole	
				PRO	92091903	ø 280 x 25 x 42	⊕ rim 5 hole				TPM0008			
				PRO	92111103	ø 260 x 24 x 41	⊕ rim 4 hole							
508400			Luc		2322501	[+] 23225 17	⊕ rim 4 hole		Luc		2341703	[+] 23417 15.2		
1.6	05/03→05/10	64 / 87	Ate		2383201	[+] 23832 19.6	⊕ rim 5 hole		Luc		82060100			
			Ate	epad	2383281	[+] 23832 19.6	⊕ rim 5 hole		Luc		82063300			
			Ate		82032000		⊕ rim 5 hole			PRO	92092103	ø 264 x 10 x 42	⊕ rim 5 hole	
			Luc		82063300					PRO	92124703	ø 264 x 10 x 42	⊕ rim 4 hole	
				PRO	92091903	ø 280 x 25 x 42	⊕ rim 5 hole				TPM0008			
				PRO	92111103	ø 260 x 24 x 41	⊕ rim 4 hole							
508500			Ate		2383201	[+] 23832 19.6			Luc		2341703	[+] 23417 15.2		
1.6 Turbo	09/05→05/10	132 / 180	Ate	epad	2383281	[+] 23832 19.6			Luc		82060100			
			Ate		82032000				Luc		82063300			
			Ate		82062900					PRO	92092103	ø 264 x 10 x 42	⊕ rim 5 hole	
				PRO	92110903	ø 308 x 25 x 42	⊕ rim 5 hole				TPM0008			
508600			Ate		2383201	[+] 23832 19.6			Luc		2341703	[+] 23417 15.2		
1.7 CDTI	09/03→05/10	74 / 100												
1.7 CDTI	09/06→05/10	92 / 125	Ate	epad	2383281	[+] 23832 19.6			Luc		82060100			
			Ate		82032000				Luc		82063300			
			Ate		82062900					PRO	92092103	ø 264 x 10 x 42	⊕ rim 5 hole	
				PRO	92091903	ø 280 x 25 x 42	⊕ rim 5 hole				TPM0008			

		kW / hp											
MERIVA B 06/10→													
		508700	Ate		2383201	[+] 23832 19.6		Luc		2341702	[–] 23417 15.2	
1.3 CDTI	06/10→	55 / 75										
1.3 CDTI	06/10→	70 / 95	Ate	epad	2383281	[+] 23832 19.6		Luc	epad	2341781	[–] 23417 15.2	
1.4	06/10→	74 / 100										
1.4 LPG	06/11→	88 / 120	Ate		82032000			Luc		82060100		
				PRO	92091903	ø 280 x 25 x 42			PRO	92092103	ø 264 x 10 x 42	
					TPM0007							
		508800	Ate		2383201	[+] 23832 19.6		Luc		2341702	[–] 23417 15.2	
1.4	06/10→	88 / 120										
			Ate	epad	2383281	[+] 23832 19.6		Luc	epad	2341781	[–] 23417 15.2	
			Ate		82032000			Luc		82060100		
				PRO	92091903	ø 280 x 25 x 42	⊕ 5-speed man.		PRO	92092103	ø 264 x 10 x 42	
				PRO	92110903	ø 308 x 25 x 42	⊕ 6-speed man.					
					TPM0007							
		508900	Ate		2383201	[+] 23832 19.6		Luc		2341702	[–] 23417 15.2	
1.4	06/10→	103 / 140										
1.7 CDTI	06/10→	96 / 131	Ate	epad	2383281	[+] 23832 19.6		Luc	epad	2341781	[–] 23417 15.2	
			Ate		82032000			Luc		82060100		
				PRO	92110903	ø 308 x 25 x 42			PRO	92092103	ø 264 x 10 x 42	
					TPM0007							
		509000	Ate		2383201	[+] 23832 19.6		Luc		2341702	[–] 23417 15.2	
1.6 CDTi	08/13→	100 / 136										
1.6 CDTI	01/14→	70 / 95	Ate	epad	2383281	[+] 23832 19.6		Luc	epad	2341781	[–] 23417 15.2	
1.6 CDTI	03/14→	81 / 110	Ate		82032000				PRO	92092103	ø 264 x 10 x 42	
				PRO	92110903	ø 308 x 25 x 42						
					TPM0007							
		509100	Ate		2383201	[+] 23832 19.6		Luc		2341702	[–] 23417 15.2	
1.7 CDTI	06/10→	74 / 100										
1.7 CDTI	06/10→	81 / 110	Ate	epad	2383281	[+] 23832 19.6		Luc	epad	2341781	[–] 23417 15.2	
			Ate		82032000			Luc		82060100		
				PRO	92091903	ø 280 x 25 x 42	→B4		PRO	92092103	ø 264 x 10 x 42	
				PRO	92110903	ø 308 x 25 x 42	B4→					
					TPM0007							
MOKKA 06/12→													
		509200			2503401	[+] 25034 18.8				2509602	[+] 25096 16.2	
1.4	04/13→	103 / 140										
1.4 LPG	04/13→	103 / 140		epad	2503481	[+] 25034 18.8			PRO	92205503	ø 268 x 12 x 45.1	
1.8	01/13→	103 / 140										
1.8 4x4	01/13→	103 / 140		PRO	92243303	ø 300 x 26 x 45.5						
		509300			2503401	[+] 25034 18.8				2509602	[+] 25096 16.2	
1.4 4x4	06/12→	103 / 140										
1.6	06/12→	85 / 116		epad	2503481	[+] 25034 18.8				82516700		
1.7 CDTI	06/12→	96 / 131										
1.7 CDTI 4x4	06/12→	96 / 131	Man		82505200				PRO	92205503	ø 268 x 12 x 45.1	
				PRO	92243303	ø 300 x 26 x 45.5						
MONTEREY B 07/98→08/99													
		509400	Ake		2184501	[+] 21845 16.5		Sum		2187503	[+] 21875 15.8	
3.0 DTI	07/98→08/99	117 / 159										
3.5 V6 24V	07/98→08/99	158 / 215	Ake		82033700			Sum		82033800		
					92091400	ø 280 x 26 x 36				92091600	ø 313 x 18 x 80	
										91059200	ø 210 x 32	

N - P

		kW / hp											
MOVANO B Box 05/10→													
		509500	Bre		2514701	[+] 25147 18		Bos		2511201	[+] 25112 18.1	⊕ single tyre
2.3 CDTI [RWD]	05/10→	74 / 101										
2.3 CDTI [RWD]	05/10→	92 / 125	Bos		82076300			Bre		2517201	[+] 25172 18	⊕ dual tyres
2.3 CDTI [RWD]	05/10→	107 / 146			92228600	ø 302 x 28 x 70				92228800	ø 305 x 12 x 71.5	⊕ single tyre
					TPM0004					92230800	ø 302 x 18 x 50.9	⊕ dual tyres
										TPM0004		
		509600	Bre		2514701	[+] 25147 18		Bos		2511201	[+] 25112 18.1	⊕ single tyre
2.3 CDTI [RWD]	01/13→	110 / 150										
2.3 CDTI FWD	01/13→	110 / 150			92228600	ø 302 x 28 x 70		Bre		2517201	[+] 25172 18	⊕ dual tyres
										92228800	ø 305 x 12 x 71.5	⊕ single tyre
										92230800	ø 302 x 18 x 50.9	⊕ dual tyres
		509700	Bre		2514701	[+] 25147 18		Bos		2511201	[+] 25112 18.1	⊕ single tyre
2.3 CDTI [RWD]	05/14→	100 / 136										
2.3 CDTI [RWD]	05/14→	120 / 163			92228600	ø 302 x 28 x 70		Bre		2517201	[+] 25172 18	⊕ dual tyres
2.3 CDTI FWD	05/14→	81 / 110										
2.3 CDTI FWD	05/14→	100 / 136								92228700	ø 305 x 12 x 71.5	
2.3 CDTI FWD	05/14→	120 / 163								92228800	ø 305 x 12 x 71.5	⊕ single tyre
										92230800	ø 302 x 18 x 50.9	⊕ dual tyres
		509800	Bre		2514701	[+] 25147 18		Bos		2511201	[+] 25112 18.1	
2.3 CDTI FWD	05/10→	74 / 101										
2.3 CDTI FWD	05/10→	92 / 125	Bos		82076300					92228700	ø 305 x 12 x 71.5	
2.3 CDTI FWD	05/10→	107 / 146			92228600	ø 302 x 28 x 70				TPM0004		
					TPM0004							
MOVANO B Bus 12/10→													
		509900	Bre		2514701	[+] 25147 18		Bos		2511201	[+] 25112 18.1	
2.3 CDTI	12/10→	74 / 101										
2.3 CDTI	12/10→	92 / 125	Bos		82076300					92228700	ø 305 x 12 x 71.5	
2.3 CDTI	12/10→	107 / 146			92228600	ø 302 x 28 x 70				TPM0004		
					TPM0004							
		510000	Bre		2514701	[+] 25147 18		Bos		2511201	[+] 25112 18.1	⊕ single tyre
2.3 CDTI	01/13→	110 / 150										
					92228600	ø 302 x 28 x 70		Bre		2517201	[+] 25172 18	⊕ dual tyres
										92228800	ø 305 x 12 x 71.5	⊕ single tyre
										92230800	ø 302 x 18 x 50.9	⊕ dual tyres
		510100	Bre		2514701	[+] 25147 18		Bos		2511201	[+] 25112 18.1	⊕ single tyre
2.3 CDTI	05/14→	81 / 110										
2.3 CDTI	05/14→	100 / 136			92228600	ø 302 x 28 x 70		Bre		2517201	[+] 25172 18	⊕ dual tyres
2.3 CDTI	05/14→	120 / 163								92228700	ø 305 x 12 x 71.5	
										92228800	ø 305 x 12 x 71.5	⊕ single tyre
										92230800	ø 302 x 18 x 50.9	⊕ dual tyres
MOVANO B Kasten 05/10→ → MOVANO B Box, Page 808													
MOVANO Box (F9) 01/99→													
		510200	Bos		2330201	[–] 23302 17.5	⊕ rim size 15"	Bos		2366901	[–] 23669 16.8	⊕ rear disc brake
1.9 DTI	09/00→10/01	59 / 80										
1.9 DTI	10/01→	60 / 82	Bos		2361301	[–] 23613 17.8	⊕ rim size 16"	Bos		82063800		
2.2 DTI	09/00→	66 / 90										
2.5 CDTI	10/03→	74 / 101						Bos		82510100		
2.5 CDTI	10/03→	88 / 120	Bos		82076300							
2.5 CDTI	10/03→	107 / 146										
2.5 D	01/99→09/00	59 / 80			92097700	ø 280 x 24 x 61.5	⊕ rim size 15"			91054500	ø 280 x 65	⊕ rear drum brake
2.5 DTi	10/03→	73 / 99										
2.5 DTI	10/01→	84 / 115			92115903	ø 305.5 x 28 x 77.8	⊕ rim size 16"			97014600		⊕ rear drum brake
2.8 DTI	01/99→10/01	84 / 114										
3.0 DTI	10/03→	100 / 136			TPM0004					83054500	bore ø 23.8 ø 280 x 65	⊕ rear drum brake
										84054500	bore ø 23.8 ø 280 x 65	⊕ rear drum brake

N - P

		kW / hp											
MOVANO Box (F9) 01/99→													
		510200											
1.9 DTI	09/00→10/01	59 / 80								PRO	92111203	ø 305 x 12 x 66.8	⊕ rear disc brake
1.9 DTI	10/01→	60 / 82									TPM0004		
2.2 DTI	09/00→	66 / 90									94027000	ø 280,0 x 69.5	⊕ rear drum brake
2.5 CDTI	10/03→	74 / 101											
2.5 CDTI	10/03→	88 / 120											
2.5 CDTI	10/03→	107 / 146											
2.5 D	01/99→09/00	59 / 80											
2.5 DTi	10/03→	73 / 99											
2.5 DTI	10/01→	84 / 115											
2.8 DTI	01/99→10/01	84 / 114											
3.0 DTI	10/03→	100 / 136											
MOVANO B Platform/Chassis 05/10→													
		510300	Bre		2514701	[+] 25147 18			Bos		2511201	[+] 25112 18.1	⊕ single tyre
2.3 CDTI [RWD]	05/10→	74 / 101	Bos		82076300				Bre		2517201	[+] 25172 18	⊕ dual tyres
2.3 CDTI [RWD]	05/10→	92 / 125			92228600	ø 302 x 28 x 70					92228800	ø 305 x 12 x 71.5	⊕ single tyre
2.3 CDTI [RWD]	05/10→	107 / 146			TPM0004						92230800	ø 302 x 18 x 50.9	⊕ dual tyres
											TPM0004		
		510400	Bre		2514701	[+] 25147 18			Bos		2511201	[+] 25112 18.1	⊕ single tyre
2.3 CDTI [RWD]	01/13→	110 / 150			92228600	ø 302 x 28 x 70			Bre		2517201	[+] 25172 18	⊕ dual tyres
2.3 CDTI FWD	01/13→	110 / 150									92228800	ø 305 x 12 x 71.5	⊕ single tyre
											92230800	ø 302 x 18 x 50.9	⊕ dual tyres
		510500	Bre		2514701	[+] 25147 18			Bos		2511201	[+] 25112 18.1	⊕ single tyre
2.3 CDTI [RWD]	05/14→	100 / 136			92228600	ø 302 x 28 x 70			Bre		2517201	[+] 25172 18	⊕ dual tyres
2.3 CDTI [RWD]	05/14→	120 / 163									92228700	ø 305 x 12 x 71.5	
2.3 CDTI FWD	05/14→	81 / 110									92228800	ø 305 x 12 x 71.5	⊕ single tyre
2.3 CDTI FWD	05/14→	100 / 136									92230800	ø 302 x 18 x 50.9	⊕ dual tyres
2.3 CDTI FWD	05/14→	120 / 163											
		510600	Bre		2514701	[+] 25147 18			Bos		2511201	[+] 25112 18.1	
2.3 CDTI FWD	05/10→	74 / 101	Bos		82076300						92228700	ø 305 x 12 x 71.5	
2.3 CDTI FWD	05/10→	92 / 125			92228600	ø 302 x 28 x 70					TPM0004		
2.3 CDTI FWD	05/10→	107 / 146			TPM0004								
MOVANO B Pritsche/Fahrgestell 05/10→ → MOVANO B Platform/Chassis, Page 809													
MOVANO Combi (J9) 07/98→12/06													
		510700	Bos		2330201	[–] 23302 17.5	⊕ rim size 15"		Bos		2366901	[–] 23669 16.8	⊕ rear disc brake
1.9 DTI	09/00→10/01	59 / 80	Bos		2361301	[–] 23613 17.8	⊕ rim size 16"		Bos		82063800		
1.9 DTI	10/01→	60 / 82	Bos		82076300				Bos		82510100		
2.2 DTI	09/00→	66 / 90			92097700	ø 280 x 24 x 61.5	⊕ rim size 15"				91054500	ø 280 x 65	⊕ rear drum brake
2.5 CDTI	08/06→	88 / 120		PRO	92115903	ø 305.5 x 28 x 77.8	⊕ rim size 16"				97014600		⊕ rear drum brake
2.5 CDTI	08/06→	107 / 146			TPM0004						83054500	bore ø 23.8 ø 280 x 65	⊕ rear drum brake
2.5 CDTI	09/07→	74 / 101									84054500	bore ø 23.8 ø 280 x 65	⊕ rear drum brake
2.5 D	07/98→09/00	59 / 80								PRO	92111203	ø 305 x 12 x 66.8	⊕ rear disc brake
2.5 DTI	10/01→	84 / 115									TPM0004		
2.8 DTI	07/98→10/01	84 / 114									94027000	ø 280,0 x 69.5	⊕ rear drum brake
3.0 DTi	10/03→	100 / 136											
		510800	Bos		2330201	[–] 23302 17.5	⊕ rim size 15"		Bos		2366901	[–] 23669 16.8	⊕ rear disc brake
2.5 CDTI	10/03→12/06	73 / 99	Bos		2361301	[–] 23613 17.8	⊕ rim size 16"				91054500	ø 280 x 65	⊕ rear drum brake
			Bos		82076300						83054500	bore ø 23.8 ø 280 x 65	⊕ rear drum brake
					92097700	ø 280 x 24 x 61.5	⊕ rim size 15"				84054500	bore ø 23.8 ø 280 x 65	⊕ rear drum brake
				PRO	92115903	ø 305.5 x 28 x 77.8	⊕ rim size 16"			PRO	92111203	ø 305 x 12 x 66.8	⊕ rear disc brake

N - P

		kW / hp											
MOVANO Combi (J9) 07/98→12/06													
		510800											
2.5 CDTI	10/03→12/06	73 / 99											
										94027000	ø 280,0 x 69.5	⊕ rear drum brake	
MOVANO Dumptruck (H9) 01/99→													
		510900	Bos		**2330201**	[–] 23302 17.5	⊕ rim size 15"		Bos	**2366901**	[–] 23669 16.8	⊕ rear disc brake	
2.2 DTI	09/00→	66 / 90											
2.5 CDTI	08/06→	74 / 101	Bos		**2361301**	[–] 23613 17.8	⊕ rim size 16"		Bos	**82063800**			
2.5 CDTI	08/06→	88 / 120											
2.5 CDTI	08/06→	107 / 146	Bos		**82076300**				Bos	**82510100**			
2.5 D	01/99→09/00	59 / 80											
2.5 DTI	10/01→	84 / 115			**92097700**	ø 280 x 24 x 61.5	⊕ rim size 15"			**91054500**	ø 280 x 65	⊕ rear drum brake	
2.5 DTI	10/03→	73 / 99											
2.8 DTI	01/99→10/01	84 / 114		PRO	**92115903**	ø 305.5 x 28 x 77.8	⊕ rim size 16"			**97014600**		⊕ rear drum brake	
3.0 DTI	10/03→	100 / 136											
					TPM0004					**83054500**	bore ø 23.8 ø 280 x 65	⊕ rear drum brake	
										84054500	bore ø 23.8 ø 280 x 65	⊕ rear drum brake	
										92111203	ø 305 x 12 x 66.8	⊕ rear disc brake	
										TPM0004			
										94027000	ø 280,0 x 69.5	⊕ rear drum brake	
MOVANO Fourgon (F9) 01/99→ → MOVANO Box (F9), Page 808													
MOVANO Kasten (F9) 01/99→ → MOVANO Box (F9), Page 808													
MOVANO Kipper (H9) 01/99→ → MOVANO Dumptruck (H9), Page 810													
MOVANO Platform/Chassis (U9, E9) 07/98→													
		511000	Bos		**2330201**	[–] 23302 17.5	⊕ rim size 15"		Bos	**2366901**	[–] 23669 16.8	⊕ rear disc brake	
2.2 DTI	09/00→	66 / 90											
2.5 CDTI	08/06→	74 / 101	Bos		**2361301**	[–] 23613 17.8	⊕ rim size 16"		Bos	**82063800**			
2.5 CDTI	08/06→	88 / 120											
2.5 CDTI	08/06→	107 / 146	Bos		**82076300**				Bos	**82510100**			
2.5 D	07/98→09/00	59 / 80											
2.5 DTi	10/03→	73 / 99			**92097700**	ø 280 x 24 x 61.5	⊕ rim size 15"			**91054500**	ø 280 x 65	⊕ rear drum brake	
2.5 DTI	10/01→	84 / 115											
2.8 DTI	07/98→10/01	84 / 114		PRO	**92115903**	ø 305.5 x 28 x 77.8	⊕ rim size 16"			**97014600**		⊕ rear drum brake	
3.0 DTI	10/03→	100 / 136											
					TPM0004					**83054500**	bore ø 23.8 ø 280 x 65	⊕ rear drum brake	
										84054500	bore ø 23.8 ø 280 x 65	⊕ rear drum brake	
										92111203	ø 305 x 12 x 66.8	⊕ rear disc brake	
										TPM0004			
										94027000	ø 280,0 x 69.5	⊕ rear drum brake	
MOVANO Pritsche/Fahrgestell (U9, E9) 07/98→ → MOVANO Platform/Chassis (U9, E9), Page 810													
OMEGA B (25_, 26_, 27_) 03/94→07/03													
		511100	Luc		**2136801**	[o] 21368 18.3	⊕ arm.veh.		Ate	**2105002**	[–] 21050 15.2		
2.0	03/94→09/99	85 / 116					W1000001→						
2.0	03/94→12/00	85 / 115	Ate		**2141101**	[o] 21411 17.5	→V1999999 ⊖ arm.veh.			**82025800**			
2.0 16V	03/94→09/99	100 / 136											
					98020000	L730	→V1999999 ⊖ arm.veh.			**92067003**	ø 286 x 12 x 69		
					98020100	L735				**TPM0007**			
							⊕ arm.veh.						
							W1000001→			**91018400**	ø 160 x 24.5		
			Ate		**82032000**		→V1999999 ⊖ arm.veh.						
			Luc		**82062800**		⊕ arm.veh.			**97005600**			
							W1000001→						
			Ate		**82062900**		→V1999999 ⊖ arm.veh.						
					92057700	ø 296 x 28 x 58.3	⊕ arm.veh.						
							W1000001→						
				PRO	**92066903**	ø 286 x 24 x 58.4	→V1999999 ⊖ arm.veh.						
					TPM0007								
		511200	Luc		**2136801**	[o] 21368 18.3	⊕ arm.veh. W1000001→		Ate	**2105002**	[–] 21050 15.2		
2.0	05/94→05/99	90 / 122	Ate		**2141101**	[o] 21411 17.5	→V1999999			**82025800**			
					98020000	L730	→V1999999			**92067003**	ø 286 x 12 x 69		
					98020100	L735	⊕ arm.veh. W1000001→						

		kW / hp										
OMEGA B (25_, 26_, 27_) 03/94→07/03												
		511200	Ate		82032000		→V1999999			TPM0007		
2.0	05/94→05/99	90 / 122	Luc		82062800		W1000001→			91018400	ø 160 x 24.5	
			Ate		82062900		→V1999999			97005600		
					92057700	ø 296 x 28 x 58.3	⊕ arm.veh. W1000001→					
				PRO	92066903	ø 286 x 24 x 58.4	→V1999999					
					TPM0007							
		511300	Luc		2136801	[o] 21368 18.3		Ate		2105002	[–] 21050 15.2	
2.0 DTI 16V	09/97→09/00	74 / 101										
2.2 16V	09/99→07/03	106 / 144			98020100	L735		Ate		82025700		vented disc
2.2 DTI 16V	09/00→07/03	81 / 110										
2.2 DTI 16V	09/00→07/03	88 / 120	Luc		82062800					82025800		solid disc
2.5 D	05/94→05/99	96 / 131										
2.5 DTI	09/01→07/03	110 / 150			92057700	ø 296 x 28 x 58.3			PRO	92067003	ø 286 x 12 x 69	
2.5 TD	04/94→07/03	96 / 130										
2.5 V6	03/94→09/00	125 / 170			TPM0007					92144900	ø 286 x 20 x 69.5	
2.6 V6	09/00→07/03	132 / 180										
3.0 V6	04/94→02/01	155 / 211								TPM0007		
3.2 V6	02/01→07/03	160 / 218										
										91018400	ø 160 x 24.5	
										97005600		
		511400	Luc		2136801	[o] 21368 18.3	W1000001→	Ate		2105002	[–] 21050 15.2	
2.2 DTI 16V	01/01→	86 / 117										
					TPM0007					TPM0007		
OMEGA B Estate (21_, 22_, 23_) 03/94→07/03												
		511500	Luc		2136801	[o] 21368 18.3	⊕ arm.veh.	Ate		2105002	[–] 21050 15.2	
2.0	03/94→09/99	85 / 116					W1000001→					
2.0 16V	03/94→09/99	100 / 136	Ate		2141101	[o] 21411 17.5	→V1999999 ⊖ arm.veh.			82025800		
					98020000	L730	→V1999999 ⊖ arm.veh.		PRO	92067003	ø 286 x 12 x 69	
					98020100	L735				TPM0007		
							⊕ arm.veh.					
							W1000001→			91018400	ø 160 x 24.5	
			Ate		82032000		→V1999999 ⊖ arm.veh.					
			Luc		82062800		⊕ arm.veh.			97005600		
							W1000001→					
			Ate		82062900		→V1999999 ⊖ arm.veh.					
					92057700	ø 296 x 28 x 58.3	⊕ arm.veh.					
							W1000001→					
				PRO	92066903	ø 286 x 24 x 58.4	→V1999999 ⊖ arm.veh.					
					TPM0007							
		511600	Luc		2136801	[o] 21368 18.3	⊕ arm.veh. W1000001→	Ate		2105002	[–] 21050 15.2	
2.0	05/94→05/99	90 / 122	Ate		2141101	[o] 21411 17.5	→V1999999			82025800		
					98020000	L730	→V1999999		PRO	92067003	ø 286 x 12 x 69	
					98020100	L735	⊕ arm.veh. W1000001→			TPM0007		
			Ate		82032000		→V1999999			91018400	ø 160 x 24.5	
			Luc		82062800		W1000001→			97005600		
			Ate		82062900		→V1999999					
					92057700	ø 296 x 28 x 58.3	⊕ arm.veh. W1000001→					
				PRO	92066903	ø 286 x 24 x 58.4	→V1999999					
					TPM0007							
		511700	Luc		2136801	[o] 21368 18.3		Ate		2105002	[–] 21050 15.2	
2.0 DTI 16V	09/97→09/00	74 / 101										
2.2 16V	09/99→07/03	106 / 144			98020100	L735		Ate		82025700		vented disc
2.2 DTI 16V	09/00→07/03	81 / 110										
2.2 DTI 16V	09/00→07/03	88 / 120										
2.5 DTI	09/01→07/03	110 / 150	Luc		82062800					82025800		solid disc
2.5 TD	04/94→07/01	96 / 131										
2.5 V6	03/94→09/00	125 / 170										

N - P

OMEGA B Estate (21_, 22_, 23_) 03/94→07/03

			kW / hp
2.6	05/94→05/99	138 / 188	
2.6 V6	09/00→07/03	132 / 180	
3.0 V6	04/94→02/01	155 / 211	
3.2 V6	02/01→07/03	160 / 218	

		92057700	ø 296 x 28 x 58.3			PRO	92067003	ø 286 x 12 x 69	
		TPM0007					92144900	ø 286 x 20 x 69.5	
							TPM0007		
							91018400	ø 160 x 24.5	
							97005600		

OMEGA B Kombi (21_, 22_, 23_) 03/94→07/03 → OMEGA B Estate (21_, 22_, 23_), Page 811

SIGNUM 05/03→06/08

			kW / hp
1.8	05/03→	511800	90 / 122

Ate		2373807	[o] 23738 20.6	→51999999 →58999999 ⊖ police veh. ⊖ sports susp.	Ate		2413701	[–] 24137 16.7	
				→51066206 →48999999 ⊕ police veh. ⊕ sports susp.	Ate	epad	2413781	[–] 24137 16.7	
Ate		2415501	[o] 24155 20.6		Ate		82062900		
		98029100	L685	→48045597 →41048789	Ate		82503500		
		98031400	L287	41048790→ 48045598→		PRO	92118503	ø 278 x 12 x 41.5	
Ate		82032000		⊕ police veh. ⊕ sports susp. 51066207→ 58→		PRO	92118403	ø 292 x 20 x 41.5	
				⊖ police veh. ⊖ sports susp. 51064147→ 58→			TPM0008		
Ate		82055100		→51064146 →48999999 ⊖ police veh. ⊖ sports susp.					
Ate		82062900							
Ate		82501200		→51066206 →48999999 ⊕ police veh. ⊕ sports susp.					
	PRO	92118303	ø 302 x 28 x 45	⊕ sports susp.					
	PRO	92118703	ø 285 x 25 x 41.9	⊖ sports susp.					
		TPM0007							

1.8	09/05→	511900	103 / 140							
Ate		2373807	[o] 23738 20.6	→51999999 →58999999 ⊖ sports susp. ⊖ police veh.	Ate		2413701	[–] 24137 16.7	
Ate		2415501	[o] 24155 20.6	61000001→ 68→	Ate	epad	2413781	[–] 24137 16.7	
		98029100	L685	→48045597 →41048789	Ate		82062900		
Ate		82032000			Ate		82503500		
Ate		82062900				PRO	92118503	ø 278 x 12 x 41.5	
	PRO	92118303	ø 302 x 28 x 45	⊕ police veh.		PRO	92118403	ø 292 x 20 x 41.5	
	PRO	92118703	ø 285 x 25 x 41.9	⊖ police veh.			TPM0008		
		TPM0007							

1.9 CDTI	04/04→	512000	88 / 120							
1.9 CDTI	04/04→		110 / 150							
1.9 CDTI	08/05→		74 / 100							
Ate		2415501	[o] 24155 20.6		Ate		2413701	[–] 24137 16.7	
		98029100	L685	→48045597 →41048789	Ate	epad	2413781	[–] 24137 16.7	
		98031400	L287	41048790→ 48045598→	Ate		82062900		
Ate		82032000		54064147→ 58→ ⊖ police veh. ⊖ sports susp.	Ate		82503500		
				51066207→ 58→ ⊕ police veh. ⊕ sports susp.		PRO	92118503	ø 278 x 12 x 41.5	
Ate		82055100		→51064146 →48999999 ⊖ police veh. ⊖ sports susp.		PRO	92118403	ø 292 x 20 x 41.5	
Ate		82062900					TPM0008		
Ate		82501200		→51066206 →48999999 ⊕ police veh. ⊕ sports susp.					
	PRO	92118303	ø 302 x 28 x 45	⊕ police veh. ⊕ sports susp.					
	PRO	92118703	ø 285 x 25 x 41.9	⊕ sports susp. ⊕ police veh.					
		TPM0007							

2.0 DTI	05/03→	512100	74 / 100							
Ate		2373807	[o] 23738 20.6		Ate		2413701	[–] 24137 16.7	
		98029100	L685	→48045597 →41048789	Ate	epad	2413781	[–] 24137 16.7	

30 kW / hp

SIGNUM 05/03→06/08

2.0 DTI	05/03→	512100 74 / 100		98031400	L287	41048790→ 48045598→	Ate	82062900					
			Ate	82032000		51064147→ 58→	Ate	82503500					
			Ate	82055100		→51064146 →48999999	PRO	92118503	ø 278 x 12 x 41.5				
			Ate	82062900			PRO	92118403	ø 292 x 20 x 41.5				
			PRO	92118703	ø 285 x 25 x 41.9		TPM	TPM0008					
			TPM	TPM0007									
2.0 Turbo	05/03→	512200 129 / 175	Ate	2373807	[o] 23738 20.6	→51066206 →48999999	Ate	2413701	[–] 24137 16.7				
			Ate	2415501	[o] 24155 20.6		Ate epad	2413781	[–] 24137 16.7				
				98029100	L685	→48045597 →41048789	Ate	82062900					
			Ate	82032000		51066207→ 58→	Ate	82503500					
			Ate	82062900			PRO	92118503	ø 278 x 12 x 41.5				
			Ate	82501200		→51066206 →48999999	PRO	92118403	ø 292 x 20 x 41.5				
			PRO	92118303	ø 302 x 28 x 45		TPM	TPM0008					
			TPM	TPM0007									
2.2 direct	05/03→	512300 114 / 155	Ate	2373807	[o] 23738 20.6	→51999999 →58999999 ⊖ police veh. ⊖ sports susp.	Ate	2413701	[–] 24137 16.7				
			Ate	2415501	[o] 24155 20.6	→51066206 →48999999	Ate epad	2413781	[–] 24137 16.7				
				98029100	L685	→48045597 →41048789	Ate	82062900					
			Ate	82032000		51064147→ 58→ 51066207→ 58→ ⊕ sports susp.	Ate	82503500					
			Ate	82055100		→51064146 →48999999 ⊖ sports susp.	PRO	92118503	ø 278 x 12 x 41.5				
			Ate	82062900			PRO	92118403	ø 292 x 20 x 41.5				
			Ate	82501200		→51066206 →48999999 ⊕ sports susp.	TPM	TPM0008					
			PRO	92118303	ø 302 x 28 x 45	⊕ sports susp.							
			PRO	92118703	ø 285 x 25 x 41.9	⊖ sports susp.							
			TPM	TPM0007									
2.2 DTI	05/03→	512400 92 / 125	Ate	2373807	[o] 23738 20.6	⊖ police veh. →58999999 →51066206	Ate	2413701	[–] 24137 16.7				
			Ate	2415501	[o] 24155 20.6	51066207→ →51999999 →58999999	Ate epad	2413781	[–] 24137 16.7				
				98029100	L685	→48045597 →41048789	Ate	82062900					
				98031400	L287	41048790→ 48045598→	Ate	82503500					
			Ate	82032000		51064147→ 58→ 51066207→ 58→ ⊕ sports susp.	PRO	92118503	ø 278 x 12 x 41.5				
			Ate	82055100		→51064146 →48999999 ⊖ sports susp.	PRO	92118403	ø 292 x 20 x 41.5				
			Ate	82062900			TPM	TPM0008					
			Ate	82501200		→51066206 →48999999 ⊕ sports susp.							
			PRO	92118303	ø 302 x 28 x 45	⊕ sports susp.							
			PRO	92118703	ø 285 x 25 x 41.9	⊖ sports susp.							
			TPM	TPM0007									
2.2 DTI 16V	05/03→06/08	512500 86 / 117	Ate	2373807	[o] 23738 20.6	→51064146 →48999999 ⊖ police veh. ⊖ sports susp.	Ate	2413701	[–] 24137 16.7				
			Ate	2415501	[o] 24155 20.6	→51066206 ⊕ police veh. ⊕ sports susp. 51066207→ →51999999	Ate epad	2413781	[–] 24137 16.7				
			Ate	82032000		51064147→ 51066207→	Ate	82503500					
			Ate	82055100		→51064146 ⊖ sports susp.	PRO	92118503	ø 278 x 12 x 41.5				
							PRO	92118403	ø 292 x 20 x 41.5				

N - P

		kW / hp									
SIGNUM 05/03→06/08											
512500											
2.2 DTI 16V	05/03→06/08	86 / 117	Ate	82501200		→51066206 ⊕ sports susp. ⊕ police veh.					
			PRO	92118303	ø 302 x 28 x 45	⊕ sports susp.					
			PRO	92118703	ø 285 x 25 x 41.9	⊖ sports susp.					
				TPM0007							
512600			Ate	2022401	[o] 20224 20.9		Ate	2413701	[–] 24137 16.7		
2.8 V6 Turbo	09/05→	169 / 230		98030100	L302		Ate epad	2413781	[–] 24137 16.7		
			Ate	82062900			Ate	82062900			
			Ate	82071800			Ate	82503500			
			PRO	92118803	ø 314 x 28 x 44.9	⊖ OPC, VRX 61000001→	PRO	92118503	ø 278 x 12 x 41.5		
			PRO	92242403	ø 345 x 30 x 45.4	⊕ OPC, VRX	PRO	92118403	ø 292 x 20 x 41.5		
				TPM0007				TPM0008			
512700			Ate	2022401	[o] 20224 20.9		Ate	2413701	[–] 24137 16.7		
2.8 V6 Turbo	01/06→	184 / 250		98030100	L302		Ate epad	2413781	[–] 24137 16.7		
			Ate	82062900			Ate	82062900			
			Ate	82071800			Ate	82503500			
			PRO	92118803	ø 314 x 28 x 44.9	⊖ OPC, VRX 61000001→	PRO	92118503	ø 278 x 12 x 41.5		
			PRO	92242403	ø 345 x 30 x 45.4	⊕ OPC, VRX 61000001→	PRO	92118403	ø 292 x 20 x 41.5		
				TPM0007				TPM0008			
512800			Ate	2022401	[o] 20224 20.9	31070294→ 38047798→ →51999999 →58999999	Ate	2413701	[–] 24137 16.7		
3.0 V6 CDTI	05/03→	130 / 177	Ate	2340404	[o] 23404 20.4	⊕ GB ⊕ police veh.	Ate epad	2413781	[–] 24137 16.7		
3.2 V6	05/03→	155 / 211	Ate	2373807	[o] 23738 20.6	→31070293 →38047797	Ate	82062900			
				98029700	L693	→48045597 →41048789 38047798→ 31070294→	Ate	82503500			
				98030100	L302	48045598→ 41048790→		92118503	ø 278 x 12 x 41.5		
			Ate	82062900				92118403	ø 292 x 20 x 41.5		
			Ate	82501200				TPM0008			
			PRO	92118303	ø 302 x 28 x 45	→31070293 →38047797					
			PRO	92118803	ø 314 x 28 x 44.9	→51999999 →58999999 31070294→ 38047798→					
				TPM0007							
512900			Ate	2022401	[o] 20224 20.9		Ate	2413701	[–] 24137 16.7		
3.0 V6 CDTI	09/05→	135 / 184		98030100	L302	48045598→ 41048790→	Ate epad	2413781	[–] 24137 16.7		
			Ate	82062900			Ate	82062900			
			Ate	82071800			Ate	82503500			
			PRO	92118803	ø 314 x 28 x 44.9		PRO	92118503	ø 278 x 12 x 41.5		
				TPM0007			PRO	92118403	ø 292 x 20 x 41.5		
								TPM0008			
SINTRA 11/96→04/99											
513000			Wag	2335801	[+] 23358 18		Ake	2336101	[+] 23361 15		
2.2 DTI	07/97→04/99	85 / 116		82501100				92099800	ø 278 x 11 x 50.5		
2.2 i 16V	11/96→04/99	104 / 141		92091500	ø 278 x 32 x 52			91075100	ø 225 x 45		
3.0 i 24V	11/96→04/99	148 / 201									

N - P

			kW / hp											
SPEEDSTER 09/00→														
		513100		Ate		**2032306**	[–] 20323 14.5			Bre		**2041003**	[–] 20410 12.9	
2.0 Turbo	04/03→	147 / 200			PRO	**92075603**	ø 288 x 25 x 42				PRO	**92075603**	ø 288 x 25 x 42	
2.2	09/00→	108 / 147				**TPM0007**						**TPM0007**		
TIGRA (95_) 07/94→12/00														
		513200		Ate		**2054701**	[o] 20547 16.8					**91044800**	ø 200 x 28	
1.4 16V	07/94→12/00	66 / 90		Ate		**82030600**						**97008200**		
				Ate		**82062900**						**84044801**	bore ø 19 ø 200 x 28	
					PRO	**92029603**	ø 236 x 20 x 41					**94009900**	ø 200,0 x 34	⊖ ABS
					PRO	**92056503**	ø 256 x 20 x 41					**94022300**	ø 200,0 x 34	⊕ ABS
		513300		Ate		**2054701**	[o] 20547 16.8					**91044800**	ø 200 x 28	
1.4 16V	08/97→12/00	63 / 86		Ate		**82030600**						**97008200**		
				Ate		**82062900**						**94009900**	ø 200,0 x 34	⊖ ABS
					PRO	**92029603**	ø 236 x 20 x 41					**94022300**	ø 200,0 x 34	⊕ ABS
					PRO	**92056503**	ø 256 x 20 x 41							
TIGRA TwinTop 06/04→														
		513400		Luc		**2322501**	[+] 23225 17			Luc		**2328404**	[+] 23284 14	⊕ rear disc brake
1.3 CDTI	06/04→	51 / 69		Luc		**82060200**				Luc		**82060100**		
1.4	06/04→	66 / 90			PRO	**92111103**	ø 260 x 24 x 41			Luc		**82063300**		
1.8	06/04→	92 / 125				**TPM0008**						**91058200**	ø 200 x 46	⊕ rear drum brake
												84058200	bore ø 19 ø 200 x 45	⊕ rear drum brake
											PRO	**92111003**	ø 240 x 10.2 x 40.5	⊕ rear disc brake
												TPM0008		
												94024200	ø 200,0 x 52	⊕ rear drum brake
VECTRA B (36_) 10/95→04/02														
		513500		Ate		**2186201**	[o] 21862 18.3	→W-999999 XL000001→ →XL999999		Ate		**2105002**	[–] 21050 15.2	⊕ rear disc brake
1.6 i	10/95→04/02	55 / 75		Ate		**2311502**	[o] 23115 19.6	X-000001→		Ate		**82025700**		
2.0 DI 16V	11/96→04/02	60 / 82				**98021100**	L660	X-000001→		Ate		**82062900**		
						98021200	L660	→W1999999 →W5999999 →W7999999 XL000001→ →XL999999		Luc		**91049000**	ø 230 x 42	⊕ rear drum brake
												97011800		⊕ rear drum brake
				Ate		**82028900**		→W1999999 →W5999999 →W7999999 XL000001→ →XL999999				**83049001**	bore ø 19 ø 230 x 42	⊕ rear drum brake
				Ate		**82032000**		X-000001→				**84049001**	bore ø 19 ø 230 x 42	⊕ rear drum brake
				Ate		**82062900**						**84049002**	bore ø 20.6 ø 230 x 42	08/98→
					PRO	**92039203**	ø 256 x 24 x 41	→W1999999 →W5999999 →W7999999 XL00001→			PRO	**92075503**	ø 270 x 10 x 69.2	⊕ rear disc brake
					PRO	**92075603**	ø 288 x 25 x 42	X1000001→ X7000001→				**94020300**	ø 230,0 x 50.2	⊕ rear drum brake →W-999999
						TPM0007						**94022600**	ø 230,0 x 49.5	⊕ rear drum brake X-000001→
												91018400	ø 160 x 24.5	⊕ rear disc brake
												97008400		
		513600		Ate		**2186201**	[o] 21862 18.3	→W-999999 XL000001→ →XL999999		Ate		**2105002**	[–] 21050 15.2	⊕ rear disc brake
1.6 i	10/95→04/02	55 / 75		Ate		**2311502**	[o] 23115 19.6	X-000001→		Ate		**82025700**		
						98021100	L660	X-000001→		Ate		**82062900**		
										Luc		**91049000**	ø 230 x 42	⊕ rear drum brake

N - P

VECTRA B (36_) 10/95→04/02

		kW / hp											
513600				98021200	L660				97011800		⊕ rear drum brake
1.6 i	10/95→04/02	55 / 75				→W1999999 →W5999999 →W7999999					
						XL000001→ →XL999999		84049002	bore ø 20.6 ø 230 x 42	08/98→
			Ate	82028900		→W1999999 →W5999999 →W7999999		92075503	ø 270 x 10 x 69.2	⊕ rear disc brake
						XL000001→ →XL999999				
			Ate	82032000		X-000001→		94020300	ø 230,0 x 50.2	⊕ rear drum brake →W-999999
			Ate	82062900				94022600	ø 230,0 x 49.5	⊕ rear drum brake X-000001→
				92039203	ø 256 x 24 x 41	→W1999999 →W5999999 →W7999999		91018400	ø 160 x 24.5	⊕ rear disc brake
						XL00001→				
				92075603	ø 288 x 25 x 42	X1000001→ X7000001→		97008400		
				TPM0007						
513700			Ate	2186201	[o] 21862 18.3	→W-999999	Ate	2105002	[–] 21050 15.2	
1.6 i 16V	10/95→04/02	74 / 100				XL000001→ →XL999999				
1.8 i 16V	10/95→09/00	85 / 115								
1.8 i 16V	09/00→04/02	92 / 125	Ate	2311502	[o] 23115 19.6	X-000001→	Ate	82025700		
2.0 DTI 16V	06/97→04/02	74 / 101								
2.0 i	10/95→04/02	82 / 112		98021100	L660		Ate	82062900		
2.0 i	10/95→04/02	85 / 116				X-000001→				
				98021200	L660			92075503	ø 270 x 10 x 69.2	⊕ rim 4 hole
						→W1999999 →W5999999 →W7999999		92075703	ø 286 x 10 x 69.2	⊕ rim 5 hole
						XL000001→ →XL999999				
			Ate	82028900		→W1999999 →W5999999 →W7999999		91018400	ø 160 x 24.5	
						XL000001→ →XL999999				
			Ate	82032000		X-000001→		97008400		
			Ate	82062900						
				92039203	ø 256 x 24 x 41	→W1999999 →W5999999 →W7999999				
						XL00001→				
				92075603	ø 288 x 25 x 42	X1000001→ X7000001→				
				TPM0007						
513800			Ate	2186201	[o] 21862 18.3	→W-999999	Ate	2105002	[–] 21050 15.2	
1.8 i 16V	10/95→09/00	85 / 115				XL000001→ →XL999999				
			Ate	2311502	[o] 23115 19.6	X-000001→	Ate	82025700		
				98021100	L660			92075503	ø 270 x 10 x 69.2	⊕ rim 4 hole
						X-000001→				
				98021200	L660			92075703	ø 286 x 10 x 69.2	⊕ rim 5 hole
						→W1999999 →W5999999 →W7999999				
						XL000001→ →XL999999		91018400	ø 160 x 24.5	
			Ate	82028900		→W1999999 →W5999999 →W7999999		97008400		
						XL000001→ →XL999999				
			Ate	82032000		X-000001→				
				92039203	ø 256 x 24 x 41	→W1999999 →W5999999 →W7999999				
						XL00001→				
				92075603	ø 288 x 25 x 42	X1000001→ X7000001→				
				TPM0007						
513900			Ate	2311502	[o] 23115 19.6		Ate	2105002	[–] 21050 15.2	
2.0 i 16V	10/95→09/00	100 / 136								
2.2 i 16V	09/00→04/02	108 / 147		98021100	L660		Ate	82025700		
2.5 i V6	10/95→09/00	125 / 170	Ate	82032000			Ate	82062900		
2.6 i V6	09/00→04/02	125 / 170								
			Ate	82062900				92075703	ø 286 x 10 x 69.2	
				92075603	ø 288 x 25 x 42			91018400	ø 160 x 24.5	
				TPM0007				97008400		
514000			Ate	2311502	[o] 23115 19.6		Ate	2105002	[–] 21050 15.2	
2.2 DTI 16V	09/00→04/02	88 / 120								
2.2 DTI 16V	09/00→04/02	92 / 125		98021100	L660		Ate	82025700		
			Ate	82032000			Ate	82062900		
			Ate	82062900				92075503	ø 270 x 10 x 69.2	⊕ rim 4 hole

N - P

		kW / hp											
VECTRA B (36_) 10/95→04/02													
		514000			92075603	ø 288 x 25 x 42				92075703	ø 286 x 10 x 69.2	⊕ rim 5 hole
2.2 DTI 16V	09/00→04/02	88 / 120			TPM0007					91018400	ø 160 x 24.5	
2.2 DTI 16V	09/00→04/02	92 / 125								97008400		
		514100	Ate		2311502	[o] 23115 19.6		Ate		2105002	[–] 21050 15.2	
i 500 2.5	05/98→09/00	143 / 194			98021100	L660		Ate		82025700		
			Ate		82032000			Ate		82062900		
			Ate		82062900					92075703	ø 286 x 10 x 69.2	
					92110903	ø 308 x 25 x 42				91018400	ø 160 x 24.5	
					TPM0007					97008400		
VECTRA B Estate (31_) 11/96→07/03												
		514200	Ate		2186201	[o] 21862 18.3	→W-999999 XL000001→ →XL999999	Ate		2105002	[–] 21050 15.2	⊕ rear disc brake
1.6 i	11/96→06/00	55 / 75	Ate		2311502	[o] 23115 19.6	X-000001→	Ate		82025700		
					98021100	L660	X-000001→	Ate		82062900		
					98021200	L660	→W1999999 →W5999999 →W7999999 XL000001→ →XL999999	Luc		91049000	ø 230 x 42	⊕ rear drum brake
			Ate		82028900		→W1999999 →W5999999 →W7999999 XL000001→ →XL999999			97011800		⊕ rear drum brake
			Ate		82032000		X-000001→			84049002	bore ø 20.6 ø 230 x 42	08/98→
			Ate		82062900					92075503	ø 270 x 10 x 69.2	⊕ rear disc brake
					92039203	ø 256 x 24 x 41	→W1999999 →W5999999 →W7999999 XL00001→			94020300	ø 230,0 x 50.2	⊕ rear drum brake →W-999999
					92075603	ø 288 x 25 x 42	X1000001→ X7000001→			94022600	ø 230,0 x 49.5	⊕ rear drum brake X-000001→
					TPM0007					91018400	ø 160 x 24.5	⊕ rear disc brake
										97008400		
		514300	Ate		2186201	[o] 21862 18.3	→W-999999 XL000001→ →XL999999	Ate		2105002	[–] 21050 15.2	⊕ rear disc brake
1.6 i	11/96→06/00	55 / 75	Ate		2311502	[o] 23115 19.6	X-000001→	Ate		82025700		
					98021100	L660	X-000001→	Ate		82062900		
					98021200	L660	→W1999999 →W5999999 →W7999999 XL000001→ →XL999999	Luc		91049000	ø 230 x 42	⊕ rear drum brake
			Ate		82028900		→W1999999 →W5999999 →W7999999 XL000001→ →XL999999			97011800		⊕ rear drum brake
			Ate		82032000		X-000001→			83049001	bore ø 19 ø 230 x 42	⊕ rear drum brake
			Ate		82062900					84049001	bore ø 19 ø 230 x 42	⊕ rear drum brake
					92039203	ø 256 x 24 x 41	→W1999999 →W5999999 →W7999999 XL00001→			84049002	bore ø 20.6 ø 230 x 42	08/98→
					92075603	ø 288 x 25 x 42	X1000001→ X7000001→			92075503	ø 270 x 10 x 69.2	⊕ rear disc brake
					TPM0007					94020300	ø 230,0 x 50.2	⊕ rear drum brake →W-999999
										94022600	ø 230,0 x 49.5	⊕ rear drum brake X-000001→
										91018400	ø 160 x 24.5	⊕ rear disc brake
										97008400		
		514400	Ate		2186201	[o] 21862 18.3	→W-999999 XL000001→ →XL999999	Ate		2105002	[–] 21050 15.2	
1.6 i 16V	11/96→07/02	74 / 100										
1.8 i 16V	11/96→09/00	85 / 115										
1.8 i 16V	11/96→09/00	85 / 115	Ate		2311502	[o] 23115 19.6	X-000001→	Ate		82025700		
1.8 i 16V	09/00→07/03	92 / 125										
2.0 DTI 16V	06/97→07/03	74 / 101			98021100	L660	X-000001→	Ate		82062900		
2.0 i	11/96→02/02	82 / 112			98021200	L660	→W1999999 →W5999999 →W7999999 XL000001→ →XL999999			92075503	ø 270 x 10 x 69.2	⊕ rim 4 hole
										92075703	ø 286 x 10 x 69.2	⊕ rim 5 hole
			Ate		82028900		→W1999999 →W5999999 →W7999999 XL000001→ →XL999999			91018400	ø 160 x 24.5	

N - P

		kW / hp										
VECTRA B Estate (31_) 11/96→07/03												
		514400	Ate	82032000		X-000001→		97008400				
1.6 i 16V	11/96→07/02	74 / 100										
1.8 i 16V	11/96→09/00	85 / 115	Ate	82062900								
1.8 i 16V	11/96→09/00	85 / 115										
1.8 i 16V	09/00→07/03	92 / 125	PRO	92039203	ø 256 x 24 x 41	→W1999999 →W5999999 →W7999999 XL00001→						
2.0 DTI 16V	06/97→07/03	74 / 101										
2.0 i	11/96→02/02	82 / 112	PRO	92075603	ø 288 x 25 x 42	X1000001→ X7000001→						
				TPM0007								
		514500	Ate	2186201	[o] 21862 18.3	→W-999999 XL000001→ →XL999999	Ate	2105002	[–] 21050 15.2	⊕ rear disc brake		
2.0 DI 16V	11/96→06/00	60 / 82	Ate	2311502	[o] 23115 19.6	X-000001→	Ate	82025700				
				98021100	L660	X-000001→	Ate	82062900				
				98021200	L660	→W1999999 →W5999999 →W7999999 XL000001→ →XL999999	Luc	91049000	ø 230 x 42	⊕ rear drum brake		
			Ate	82028900		→W1999999 →W5999999 →W7999999 XL000001→ →XL999999		97011800		⊕ rear drum brake		
			Ate	82032000		X-000001→		83049002	bore ø 20.6 ø 230 x 42	⊕ rear drum brake		
			Ate	82062900			PRO	92075503	ø 270 x 10 x 69.2	⊕ rear disc brake		
								94020300	ø 230,0 x 50.2	⊕ rear drum brake →W-999999		
			PRO	92039203	ø 256 x 24 x 41	→W1999999 →W5999999 →W7999999 XL00001→		94022600	ø 230,0 x 49.5	⊕ rear drum brake X-000001→		
			PRO	92075603	ø 288 x 25 x 42	X1000001→ X7000001→		91018400	ø 160 x 24.5	⊕ rear disc brake		
				TPM0007				97008400				
		514600	Ate	2311502	[o] 23115 19.6		Ate	2105002	[–] 21050 15.2			
2.0 i 16V	11/96→09/00	100 / 136										
2.2 i 16V	09/00→07/03	108 / 147		98021100	L660		Ate	82025700				
2.5 i V6	11/96→09/00	125 / 170	Ate	82032000			Ate	82062900				
2.6 i V6	09/00→07/03	125 / 170	Ate	82062900								
			PRO	92075603	ø 288 x 25 x 42			92075703	ø 286 x 10 x 69.2			
				TPM0007				91018400	ø 160 x 24.5			
								97008400				
		514700	Ate	2311502	[o] 23115 19.6		Ate	2105002	[–] 21050 15.2			
2.2 DTI 16V	09/00→04/02	88 / 120										
2.2 DTI 16V	09/00→07/03	92 / 125		98021100	L660		Ate	82025700				
			Ate	82032000			Ate	82062900				
			Ate	82062900			PRO	92075503	ø 270 x 10 x 69.2	⊕ rim 4 hole		
			PRO	92075603	ø 288 x 25 x 42		PRO	92075703	ø 286 x 10 x 69.2	⊕ rim 5 hole		
				TPM0007				91018400	ø 160 x 24.5			
								97008400				
		514800	Ate	2311502	[o] 23115 19.6		Ate	2105002	[–] 21050 15.2			
i 500 2.5	05/98→09/00	143 / 194		98021100	L660		Ate	82025700				
			Ate	82032000			Ate	82062900				
			Ate	82062900				92075703	ø 286 x 10 x 69.2			
			PRO	92110903	ø 308 x 25 x 42			91018400	ø 160 x 24.5			
				TPM0007				97008400				
VECTRA B Hatchback (38_) 10/95→07/03												
		514900	Ate	2186201	[o] 21862 18.3	→W-999999 XL000001→ →XL999999	Ate	2105002	[–] 21050 15.2	⊕ rear disc brake		
1.6 i	10/95→07/03	55 / 75	Ate	2311502	[o] 23115 19.6	X-000001→	Ate	82025700				
				98021100	L660	X-000001→	Ate	82062900				
							Luc	91049000	ø 230 x 42	⊕ rear drum brake		

30 kW / hp

VECTRA B Hatchback (38_) 10/95→07/03

514900											
1.6 i	10/95→07/03	55 / 75		98021200	L660	→W1999999 →W5999999 →W7999999 XL000001→ →XL999999		97011800		⊕ rear drum brake
								84049002	bore ø 20.6 ø 230 x 42	08/98→
			Ate	82028900		→W1999999 →W5999999 →W7999999 XL000001→ →XL999999		92075503	ø 270 x 10 x 69.2	⊕ rear disc brake
			Ate	82032000		X-000001→		94020300	ø 230,0 x 50.2	⊕ rear drum brake →W-999999
			Ate	82062900				94022600	ø 230,0 x 49.5	⊕ rear drum brake X-000001→
				92039203	ø 256 x 24 x 41	→W1999999 →W5999999 →W7999999 XL00001→		91018400	ø 160 x 24.5	⊕ rear disc brake
				92075603	ø 288 x 25 x 42	X1000001→ X7000001→		97008400		
				TPM0007						
515000			Ate	2186201	[o] 21862 18.3	→W-999999 XL000001→ →XL999999	Ate	2105002	[–] 21050 15.2	⊕ rear disc brake
1.6 i	10/95→07/03	55 / 75								
2.0 DI 16V	11/96→06/00	60 / 82	Ate	2311502	[o] 23115 19.6	X-000001→	Ate	82025700		
				98021100	L660	X-000001→	Ate	82062900		
				98021200	L660	→W1999999 →W5999999 →W7999999 XL000001→ →XL999999	Luc	91049000	ø 230 x 42	⊕ rear drum brake
								97011800		⊕ rear drum brake
			Ate	82028900		→W1999999 →W5999999 →W7999999 XL000001→ →XL999999		83049001	bore ø 19 ø 230 x 42	⊕ rear drum brake
			Ate	82032000		X-000001→		84049001	bore ø 19 ø 230 x 42	⊕ rear drum brake
			Ate	82062900				84049002	bore ø 20.6 ø 230 x 42	08/98→
				92039203	ø 256 x 24 x 41	→W1999999 →W5999999 →W7999999 XL00001→		92075503	ø 270 x 10 x 69.2	⊕ rear disc brake
				92075603	ø 288 x 25 x 42	X1000001→ X7000001→		94020300	ø 230,0 x 50.2	⊕ rear drum brake →W-999999
								94022600	ø 230,0 x 49.5	⊕ rear drum brake X-000001→
				TPM0007				91018400	ø 160 x 24.5	⊕ rear disc brake
								97008400		
515100			Ate	2186201	[o] 21862 18.3	→W-999999 XL000001→ →XL999999	Ate	2105002	[–] 21050 15.2	
1.6 i 16V	10/95→07/02	74 / 101								
1.8 i 16V	10/95→09/00	85 / 116	Ate	2311502	[o] 23115 19.6	X-000001→	Ate	82025700		
1.8 i 16V	10/95→09/00	85 / 116								
1.8 i 16V	09/00→07/03	92 / 125								
2.0 DTI 16V	06/97→07/03	74 / 101		98021100	L660	X-000001→	Ate	82062900		
2.0 i	10/95→02/02	82 / 112								
				98021200	L660	→W1999999 →W5999999 →W7999999 XL000001→ →XL999999		92075503	ø 270 x 10 x 69.2	⊕ rim 4 hole
								92075703	ø 286 x 10 x 69.2	⊕ rim 5 hole
			Ate	82028900		→W1999999 →W5999999 →W7999999 XL000001→ →XL999999		91018400	ø 160 x 24.5	
			Ate	82032000		X-000001→		97008400		
			Ate	82062900						
				92039203	ø 256 x 24 x 41	→W1999999 →W5999999 →W7999999 XL00001→				
				92075603	ø 288 x 25 x 42	X1000001→ X7000001→				
				TPM0007						
515200			Ate	2311502	[o] 23115 19.6		Ate	2105002	[–] 21050 15.2	
2.0 i 16V	10/95→09/00	100 / 136								
2.2 i 16V	09/00→07/03	108 / 147		98021100	L660		Ate	82025700		
2.5	10/99→06/00	144 / 196								
2.5 i V6	10/95→09/00	125 / 170	Ate	82032000			Ate	82062900		
2.6 i V6	09/00→07/03	125 / 170								
			Ate	82062900				92075703	ø 286 x 10 x 69.2	
				92075603	ø 288 x 25 x 42			91018400	ø 160 x 24.5	
				TPM0007				97008400		
515300			Ate	2311502	[o] 23115 19.6		Ate	2105002	[–] 21050 15.2	
2.2 DTI 16V	09/00→04/02	88 / 120								
2.2 DTI 16V	09/00→07/03	92 / 125								

N - P

		kW / hp											
VECTRA B Hatchback (38_) 10/95→07/03													
515300				98021100	L660		Ate		82025700				
2.2 DTI 16V	09/00→04/02	88 / 120	Ate	82032000			Ate		82062900				
2.2 DTI 16V	09/00→07/03	92 / 125	Ate	82062900				PRO	92075503	ø 270 x 10 x 69.2	⊕ rim 4 hole		
				PRO 92075603	ø 288 x 25 x 42			PRO	92075703	ø 286 x 10 x 69.2	⊕ rim 5 hole		
				TPM0007					91018400	ø 160 x 24.5			
									97008400				
VECTRA B Kombi (31_) 11/96→07/03 → VECTRA B Estate (31_), Page 817													
VECTRA B Schrägheck (38_) 10/95→07/03 → VECTRA B Hatchback (38_), Page 818													
VECTRA C 04/02→09/08													
515400			Ate	2373807	[o] 23738 20.6	→51999999 →58999999 ⊖ sports susp. ⊖ police veh.	Ate		2413701	[–] 24137 16.7			
1.6	01/06→	77 / 105	Ate	2415501	[o] 24155 20.6	61000001→ 68→	Ate	epad	2413781	[–] 24137 16.7			
				98029100	L685	→48045597 →41048789	Ate		82062900				
				98031400	L287	41048790→ 48045598→	Ate		82503500				
			Ate	82032000				PRO	92118503	ø 278 x 12 x 41.5			
			Ate	82062900				PRO	92118403	ø 292 x 20 x 41.5			
				PRO 92118703	ø 285 x 25 x 41.9				TPM0008				
				TPM0007									
515500			Ate	2373807	[o] 23738 20.6	→51999999 →58999999 ⊖ sports susp. ⊖ police veh.	Ate		2413701	[–] 24137 16.7			
1.6 16V	06/04→	74 / 100	Ate	2415501	[o] 24155 20.6	61000001→ 68→	Ate	epad	2413781	[–] 24137 16.7			
				98029100	L685	→48045597 →41048789	Ate		82062900				
				98031400	L287	41048790→ 48045598→	Ate		82503500				
			Ate	82032000		51064147→ 58→		PRO	92118503	ø 278 x 12 x 41.5			
			Ate	82055100		→51064146 →48999999 ⊕ police veh. ⊖ sports susp.		PRO	92118403	ø 292 x 20 x 41.5			
			Ate	82062900					TPM0008				
				PRO 92118703	ø 285 x 25 x 41.9								
				TPM0007									
515600			Ate	2373807	[o] 23738 20.6	→51999999 →58999999 ⊖ police veh. ⊖ sports susp.	Ate		2413701	[–] 24137 16.7			
1.8	04/02→	81 / 110				→51066206 →48999999 ⊕ police veh. ⊕ sports susp.	Ate	epad	2413781	[–] 24137 16.7			
1.8 16V	04/02→	90 / 122	Ate	2415501	[o] 24155 20.6		Ate		82062900				
				98029100	L685	→48045597 →41048789	Ate		82503500				
				98031400	L287	41048790→ 48045598→		PRO	92118503	ø 278 x 12 x 41.5			
			Ate	82032000		⊕ police veh. ⊕ sports susp. 51066207→ 58→		PRO	92118403	ø 292 x 20 x 41.5			
						⊖ police veh. ⊖ sports susp. 51064147→ 58→			TPM0008				
			Ate	82055100		→51064146 →48999999 ⊖ police veh. ⊖ sports susp.							
			Ate	82062900									
			Ate	82501200		→51066206 →48999999 ⊕ police veh. ⊕ sports susp.							
				PRO 92118303	ø 302 x 28 x 45	⊕ sports susp.							
				PRO 92118703	ø 285 x 25 x 41.9	⊖ sports susp.							
				TPM0007									
515700			Ate	2373807	[o] 23738 20.6	→51999999 →58999999 ⊖ sports susp. ⊖ police veh.	Ate		2413701	[–] 24137 16.7			
1.8	01/06→	103 / 140	Ate	2415501	[o] 24155 20.6	61000001→ 68→	Ate	epad	2413781	[–] 24137 16.7			

30 kW / hp

VECTRA C 04/02→09/08

1.8	01/06→	515700 103 / 140		98029100	L685	→48045597 →41048789	Ate	82062900			
			Ate	82032000			Ate	82503500			
			Ate	82062900				92118503	ø 278 x 12 x 41.5		
				92118303	ø 302 x 28 x 45	⊕ police veh.		92118403	ø 292 x 20 x 41.5		
				92118703	ø 285 x 25 x 41.9	⊖ police veh.		TPM0008			
				TPM0007							
1.9 CDTI	04/04→	515800 88 / 120	Ate	2415501	[o] 24155 20.6		Ate	2413701	[–] 24137 16.7		
1.9 CDTI	04/04→	110 / 150		98029100	L685	→48045597 →41048789	Ate	2413781	[–] 24137 16.7		
1.9 CDTI	10/05→	74 / 100		98031400	L287	41048790→ 48045598→	Ate	82062900			
			Ate	82032000		54064147→ 58→ ⊖ police veh. ⊖ sports susp.	Ate	82503500			
						51066207→ 58→ ⊕ police veh. ⊕ sports susp.		92118503	ø 278 x 12 x 41.5		
			Ate	82055100		→51064146 →48999999 ⊖ police veh. ⊖ sports susp.		92118403	ø 292 x 20 x 41.5		
			Ate	82062900				TPM0008			
			Ate	82501200		→51066206 →48999999 ⊕ police veh. ⊕ sports susp.					
				92118303	ø 302 x 28 x 45	⊕ police veh. ⊕ sports susp.					
				92118703	ø 285 x 25 x 41.9	⊕ sports susp. ⊕ police veh.					
				TPM0007							
2.0 16V Turbo	03/03→	515900 129 / 175	Ate	2373807	[o] 23738 20.6	→51066206 →48999999	Ate	2413701	[–] 24137 16.7		
			Ate	2415501	[o] 24155 20.6		Ate	2413781	[–] 24137 16.7		
				98029100	L685	→48045597 →41048789	Ate	82062900			
			Ate	82032000		51066207→ 58→	Ate	82503500			
			Ate	82062900				92118503	ø 278 x 12 x 41.5		
			Ate	82501200		→51066206 →48999999		92118403	ø 292 x 20 x 41.5		
				92118303	ø 302 x 28 x 45			TPM0008			
				TPM0007							
2.0 DTI 16V	04/02→	516000 74 / 101	Ate	2373807	[o] 23738 20.6		Ate	2413701	[–] 24137 16.7		
				98029100	L685	→48045597 →41048789	Ate	2413781	[–] 24137 16.7		
				98031400	L287	41048790→ 48045598→	Ate	82062900			
			Ate	82032000		51064147→ 58→	Ate	82503500			
			Ate	82055100		→51064146 →48999999		92118503	ø 278 x 12 x 41.5		
			Ate	82062900				92118403	ø 292 x 20 x 41.5		
				92118703	ø 285 x 25 x 41.9			TPM0008			
				TPM0007							
2.2 16V	04/02→	516100 108 / 147	Ate	2373807	[o] 23738 20.6	→51999999 →58999999 ⊖ police veh. ⊖ sports susp.	Ate	2413701	[–] 24137 16.7		
2.2 direct	10/03→	114 / 155	Ate	2415501	[o] 24155 20.6	→51066206 →48999999	Ate	2413781	[–] 24137 16.7		
				98029100	L685	→48045597 →41048789	Ate	82062900			
			Ate	82032000		51064147→ 58→	Ate	82503500			
						51066207→ 58→ ⊕ sports susp.		92118503	ø 278 x 12 x 41.5		
			Ate	82055100		→51064146 →48999999 ⊖ sports susp.		92118403	ø 292 x 20 x 41.5		
			Ate	82062900				TPM0008			
			Ate	82501200		→51066206 →48999999 ⊕ sports susp.					

N - P

		kW / hp									
VECTRA C 04/02→09/08											
516100				92118303	ø 302 x 28 x 45	⊕ sports susp.					
2.2 16V	04/02→	108 / 147	PRO	92118703	ø 285 x 25 x 41.9	⊖ sports susp.					
2.2 direct	10/03→	114 / 155		TPM0007							
516200			Ate	2373807	[o] 23738 20.6	⊖ police veh. →58999999 →51066206	Ate	2413701	[–] 24137 16.7		
2.2 DTI 16V	04/02→	92 / 125	Ate	2415501	[o] 24155 20.6	51066207→ →51999999 →58999999	Ate	2413781 epad	[–] 24137 16.7		
2.2 DTI 16V	04/02→12/04	86 / 117		98029100	L685	→48045597 →41048789	Ate	82062900			
				98031400	L287	41048790→ 48045598→	Ate	82503500			
			Ate	82032000		51064147→ 58→ 51066207→ 58→ ⊕ sports susp.		92118503	ø 278 x 12 x 41.5		
			Ate	82055100		→51064146 →48999999 ⊖ sports susp.		92118403	ø 292 x 20 x 41.5		
			Ate	82062900				TPM0008			
			Ate	82501200		→51066206 →48999999 ⊕ sports susp.					
				92118303	ø 302 x 28 x 45	⊕ sports susp.					
			PRO	92118703	ø 285 x 25 x 41.9	⊖ sports susp.					
				TPM0007							
516300			Ate	2022401	[o] 20224 20.9		Ate	2413701	[–] 24137 16.7		
2.8 V6 Turbo	08/05→	169 / 230		98030100	L302		Ate	2413781 epad	[–] 24137 16.7		
2.8 V6 Turbo	08/05→	188 / 255	Ate	82062900			Ate	82062900			
			Ate	82071800			Ate	82503500			
				92118803	ø 314 x 28 x 44.9	⊖ OPC, VRX 61000001→		92118503	ø 278 x 12 x 41.5		
			PRO	92242403	ø 345 x 30 x 45.4	⊕ OPC, VRX 61000001→		92118403	ø 292 x 20 x 41.5		
				TPM0007				TPM0008			
516400			Ate	2022401	[o] 20224 20.9		Ate	2413701	[–] 24137 16.7		
2.8 V6 Turbo	08/06→	184 / 250		98030100	L302		Ate	2413781 epad	[–] 24137 16.7		
			Ate	82062900			Ate	82062900			
			Ate	82071800			Ate	82503500			
				92118803	ø 314 x 28 x 44.9	⊖ OPC, VRX 610000001→		92118503	ø 278 x 12 x 41.5		
			PRO	92242403	ø 345 x 30 x 45.4	⊕ OPC, VRX 61000001→		92118403	ø 292 x 20 x 41.5		
				TPM0007				TPM0008			
516500			Ate	2391202	[–] 23912 20.4	61000001→ ⊕ OPC,VXR	Ate	2413701	[–] 24137 16.7		
2.8 V6 Turbo OPC	09/06→09/08	206 / 280	Ate	2373807	[o] 23738 20.6	→31070293 38047797→	Ate	2413781 epad	[–] 24137 16.7		
			Ate	82071800		⊕ OPC,VXR	Ate	82503500			
			PRO	92242403	ø 345 x 30 x 45.4	61000001→ 68→		92118503	ø 278 x 12 x 41.5		
								92118403	ø 292 x 20 x 41.5		
516600			Ate	2022401	[o] 20224 20.9		Ate	2413701	[–] 24137 16.7		
3.0 CDTi	08/05→	135 / 184		98030100	L302	48045598→ 41048790→	Ate	2413781 epad	[–] 24137 16.7		
			Ate	82062900			Ate	82062900			
			Ate	82071800			Ate	82503500			
				92118803	ø 314 x 28 x 44.9			92118503	ø 278 x 12 x 41.5		
				TPM0007				92118403	ø 292 x 20 x 41.5		
								TPM0008			

N - P

kW / hp

VECTRA C 04/02→09/08

516700
3.0 CDTI 06/03→ 130 / 177
3.2 V6 08/02→ 155 / 211

Ate		2022401	[o]	20224	20.9	31070294→ 38047798→ →51999999 →58999999	Ate		2413701	[–] 24137	16.7
Ate		2340404	[o]	23404	20.4	⊕ GB ⊕ police veh.	Ate	epad	2413781	[–] 24137	16.7
Ate		2373807	[o]	23738	20.6	→31070293 →38047797	Ate		82062900		
		98029700	L693			→48045597 →41048789 38047798→ 31070294→	Ate		82503500		
		98030100	L302			48045598→ 41048790→		PRO	92118503	ø 278 x 12 x 41.5	
Ate		82062900						PRO	92118403	ø 292 x 20 x 41.5	
Ate		82501200							TPM0008		
	PRO	92118303	ø 302 x 28 x 45			→31070293 →38047797					
	PRO	92118803	ø 314 x 28 x 44.9			→51999999 →58999999 31070294→ 38047798→					
		TPM0007									

VECTRA C Estate 10/03→06/08

516800
1.6 01/06→ 77 / 105

Ate		2373807	[o]	23738	20.6	⊖ police veh. ⊖ sports susp. →51999999 →58999999	Ate		2413701	[–] 24137	16.7
Ate		2415501	[o]	24155	20.6	61000001→ 68→	Ate	epad	2413781	[–] 24137	16.7
		98029100	L685			→48045597 →41048789	Ate		82062900		
		98031400	L287			41048790→ 48045598→	Ate		82503500		
Ate		82032000						PRO	92118503	ø 278 x 12 x 41.5	
Ate		82062900						PRO	92118403	ø 292 x 20 x 41.5	
	PRO	92118703	ø 285 x 25 x 41.9						TPM0008		
		TPM0007									

516900
1.6 16V 06/04→ 74 / 100

Ate		2373807	[o]	23738	20.6	⊖ police veh. ⊖ sports susp. →51999999 →58999999	Ate		2413701	[–] 24137	16.7
Ate		2415501	[o]	24155	20.6	61000001→ 68→	Ate	epad	2413781	[–] 24137	16.7
		98029100	L685			→48045597 →41048789	Ate		82062900		
		98031400	L287			41048790→ 48045598→	Ate		82503500		
Ate		82032000				51064147→ 58→		PRO	92118503	ø 278 x 12 x 41.5	
Ate		82055100				→51064146 →48999999 ⊕ police veh. ⊖ sports susp.		PRO	92118403	ø 292 x 20 x 41.5	
Ate		82062900							TPM0008		
	PRO	92118703	ø 285 x 25 x 41.9								
		TPM0007									

517000
1.8 10/03→ 90 / 122

Ate		2373807	[o]	23738	20.6	→51999999 →58999999 ⊖ police veh. ⊖ sports susp.	Ate		2413701	[–] 24137	16.7
						→51066206 →48999999 ⊕ police veh. ⊕ sports susp.	Ate	epad	2413781	[–] 24137	16.7
Ate		2415501	[o]	24155	20.6		Ate		82062900		
		98029100	L685			→48045597 →41048789	Ate		82503500		
		98031400	L287			41048790→ 48045598→		PRO	92118503	ø 278 x 12 x 41.5	
Ate		82032000				⊕ police veh. ⊕ sports susp. 51066207→ 58→		PRO	92118403	ø 292 x 20 x 41.5	
						⊖ police veh. ⊖ sports susp. 51064147→ 58→			TPM0008		
Ate		82055100				→51064146 →48999999 ⊖ police veh. ⊖ sports susp.					
Ate		82062900									
Ate		82501200				→51066206 →48999999 ⊕ police veh. ⊕ sports susp.					
	PRO	92118303	ø 302 x 28 x 45			⊕ sports susp.					
	PRO	92118703	ø 285 x 25 x 41.9			⊖ sports susp.					
		TPM0007									

N - P

30 kW / hp

VECTRA C Estate 10/03→06/08

1.8	01/06→	517100 103 / 140	Ate	2373807	[o] 23738 20.6	⊖ police veh. ⊖ sports susp. →51999999 →58999999	Ate	2413701	[–] 24137 16.7	
			Ate	2415501	[o] 24155 20.6	61000001→ 68→	Ate	2413781	[–] 24137 16.7	
				98029100	L685	→48045597 →41048789	Ate	82062900		
			Ate	82032000			Ate	82503500		
			Ate	82062900				92118503	ø 278 x 12 x 41.5	
				92118303	ø 302 x 28 x 45	⊕ police veh.		92118403	ø 292 x 20 x 41.5	
				92118703	ø 285 x 25 x 41.9	⊖ police veh.		TPM0008		
				TPM0007						
1.9 CDTI 1.9 CDTI 1.9 CDTI	04/04→ 04/04→ 10/05→	517200 88 / 120 110 / 150 74 / 100	Ate	2415501	[o] 24155 20.6		Ate	2413701	[–] 24137 16.7	
				98029100	L685	→48045597 →41048789	Ate	2413781	[–] 24137 16.7	
				98031400	L287	41048790→ 48045598→	Ate	82062900		
			Ate	82032000		54064147→ 58→ ⊖ police veh. ⊖ sports susp. 51066207→ 58→ ⊕ police veh. ⊕ sports susp.	Ate	82503500		
			Ate	82055100		→51064146 →48999999 ⊖ police veh. ⊖ sports susp.		92118503	ø 278 x 12 x 41.5	
			Ate	82062900				92118403	ø 292 x 20 x 41.5	
			Ate	82501200		→51066206 →48999999 ⊕ police veh. ⊕ sports susp.		TPM0008		
				92118303	ø 302 x 28 x 45	⊕ police veh. ⊕ sports susp.				
				92118703	ø 285 x 25 x 41.9	⊕ sports susp. ⊕ police veh.				
				TPM0007						
2.0 DTI	10/03→	517300 74 / 100	Ate	2373807	[o] 23738 20.6	⊖ police veh. ⊖ sports susp. →51999999 →58999999	Ate	2413701	[–] 24137 16.7	
				98029100	L685	→48045597 →41048789	Ate	2413781	[–] 24137 16.7	
			Ate	82032000		51064147→ 58→ ⊖ police veh. →51064146 →48999999 ⊖ sports susp. ⊕ police veh.	Ate	82062900		
			Ate	82055100		→51064146 →48999999	Ate	82503500		
			Ate	82062900				92118503	ø 278 x 12 x 41.5	
				92118703	ø 285 x 25 x 41.9	→51999999 →58999999		92118403	ø 292 x 20 x 41.5	
				TPM0007				TPM0008		
2.0 Turbo	10/03→	517400 129 / 175	Ate	2373807	[o] 23738 20.6	→51066206 →48999999	Ate	2413701	[–] 24137 16.7	
			Ate	2415501	[o] 24155 20.6		Ate	2413781	[–] 24137 16.7	
				98029100	L685	→48045597 →41048789	Ate	82062900		
			Ate	82032000		51066207→ 58→	Ate	82503500		
			Ate	82062900				92118503	ø 278 x 12 x 41.5	
			Ate	82501200		→51066206 →48999999		92118403	ø 292 x 20 x 41.5	
				92118303	ø 302 x 28 x 45			TPM0008		
				TPM0007						
2.2 direct	10/03→	517500 114 / 155	Ate	2373807	[o] 23738 20.6	→51999999 →58999999 ⊖ police veh. ⊖ sports susp. →51066206 →48999999	Ate	2413701	[–] 24137 16.7	
			Ate	2415501	[o] 24155 20.6		Ate	2413781	[–] 24137 16.7	
				98029100	L685	→48045597 →41048789	Ate	82062900		
			Ate	82032000		51064147→ 58→ 51066207→ 58→ ⊕ sports susp.	Ate	82503500		
			Ate	82055100		→51064146 →48999999 ⊖ sports susp.		92118503	ø 278 x 12 x 41.5	
			Ate	82062900				92118403	ø 292 x 20 x 41.5	

N - P

		kW / hp									
VECTRA C Estate 10/03→06/08											
517500			Ate		82501200		→51066206 →48999999 ⊕ sports susp.			TPM0008	
2.2 direct	10/03→	114 / 155		PRO	92118303	ø 302 x 28 x 45	⊕ sports susp.				
				PRO	92118703	ø 285 x 25 x 41.9	⊖ sports susp.				
					TPM0007						
517600			Ate		2373807	[o] 23738 20.6	⊖ police veh. →58999999 →51066206	Ate		2413701	[–] 24137 16.7
2.2 DTI	10/03→	92 / 125	Ate		2415501	[o] 24155 20.6	51066207→ →51999999 →58999999	Ate	epad	2413781	[–] 24137 16.7
					98029100	L685	→48045597 →41048789	Ate		82062900	
					98031400	L287	41048790→ 48045598→	Ate		82503500	
			Ate		82032000		51064147→ 58→ 51066207→ 58→ ⊕ sports susp.		PRO	92118503	ø 278 x 12 x 41.5
			Ate		82055100		→51064146 →48999999 ⊖ sports susp.		PRO	92118403	ø 292 x 20 x 41.5
			Ate		82062900					TPM0008	
			Ate		82501200		→51066206 →48999999 ⊕ sports susp.				
				PRO	92118303	ø 302 x 28 x 45	⊕ sports susp.				
				PRO	92118703	ø 285 x 25 x 41.9	⊖ sports susp.				
					TPM0007						
517700			Ate		2373807	[o] 23738 20.6	⊖ police veh. →58999999 →51066206	Ate		2413701	[–] 24137 16.7
2.2 DTI	10/03→06/08	86 / 117	Ate		2415501	[o] 24155 20.6	51066207→ →51999999 →58999999	Ate	epad	2413781	[–] 24137 16.7
			Ate		82032000		51064147→ 58→ 51066207→ 58→ ⊕ sports susp.	Ate		82503500	
			Ate		82055100		→51064146 →48999999 ⊖ sports susp.		PRO	92118503	ø 278 x 12 x 41.5
			Ate		82501200		→51066206 →48999999 ⊕ sports susp.		PRO	92118403	ø 292 x 20 x 41.5
				PRO	92118303	ø 302 x 28 x 45	⊕ sports susp.				
				PRO	92118703	ø 285 x 25 x 41.9	⊖ sports susp.				
					TPM0007						
517800			Ate		2391202	[–] 23912 20.4		Ate		2413701	[–] 24137 16.7
2.8 V6 Turbo	08/05→	169 / 230			98030100	L302		Ate	epad	2413781	[–] 24137 16.7
2.8 V6 Turbo	08/05→	188 / 255	Ate		82062900			Ate		82062900	
2.8 V6 Turbo	01/07→	184 / 250	Ate		82071800			Ate		82503500	
				PRO	92118803	ø 314 x 28 x 44.9	⊖ OPC, VRX 61000001→		PRO	92118503	ø 278 x 12 x 41.5
				PRO	92242403	ø 345 x 30 x 45.4	⊕ OPC, VRX 61000001→		PRO	92118403	ø 292 x 20 x 41.5
					TPM0007					TPM0008	
517900			Ate		2391202	[–] 23912 20.4		Ate		2413701	[–] 24137 16.7
2.8 V6 Turbo	01/07→	206 / 280			98030100	L302		Ate	epad	2413781	[–] 24137 16.7
			Ate		82062900			Ate		82062900	
			Ate		82071800			Ate		82503500	
				PRO	92118803	ø 314 x 28 x 44.9	⊖ OPC, VRX 61000001→		PRO	92118503	ø 278 x 12 x 41.5
				PRO	92242403	ø 345 x 30 x 45.4	⊕ OPC, VRX 610000001→		PRO	92118403	ø 292 x 20 x 41.5
					TPM0007					TPM0008	
518000			Ate		2022401	[o] 20224 20.9	31070294→ 38047798→ →51999999 →58999999	Ate		2413701	[–] 24137 16.7
3.0 V6 CDTI	10/03→	130 / 177	Ate		2340404	[o] 23404 20.4	⊕ GB ⊕ police veh.	Ate	epad	2413781	[–] 24137 16.7
3.2 V6	10/03→	155 / 211	Ate		2373807	[o] 23738 20.6	→31070293 →38047797	Ate		82062900	

		kW / hp										
VECTRA C Estate 10/03→06/08												
518000				98029700	L693	→48045597 →41048789 38047798→ 31070294→	Ate		82503500		
3.0 V6 CDTI	10/03→	130 / 177		98030100	L302	48045598→ 41048790→		PRO	92118503	ø 278 x 12 x 41.5	
3.2 V6	10/03→	155 / 211	Ate	82062900				PRO	92118403	ø 292 x 20 x 41.5	
			Ate	82501200					TPM0008		
				PRO 92118303	ø 302 x 28 x 45	→31070293 →38047797					
				PRO 92118803	ø 314 x 28 x 44.9	→51999999 →58999999 31070294→ 38047798→					
				TPM0007							
518100			Ate	2022401	[o] 20224 20.9		Ate		2413701	[–] 24137 16.7	
3.0 V6 CDTI	08/05→	135 / 184		98030100	L302	48045598→ 41048790→	Ate	epad	2413781	[–] 24137 16.7	
			Ate	82062900			Ate		82062900		
			Ate	82071800			Ate		82503500		
				PRO 92118803	ø 314 x 28 x 44.9			PRO	92118503	ø 278 x 12 x 41.5	
				TPM0007				PRO	92118403	ø 292 x 20 x 41.5	
									TPM0008		
VECTRA C GTS 08/02→06/08												
518200			Ate	2373807	[o] 23738 20.6	⊖ police veh. ⊖ sports susp. →51999999 →58999999	Ate		2413701	[–] 24137 16.7	
1.6	08/05→	74 / 100	Ate	2415501	[o] 24155 20.6	61000001→ 68→	Ate	epad	2413781	[–] 24137 16.7	
1.6	01/06→	77 / 105		98029100	L685	→48045597 →41048789	Ate		82062900		
				98031400	L287	41048790→ 48045598→	Ate		82503500		
			Ate	82032000				PRO	92118503	ø 278 x 12 x 41.5	
			Ate	82062900				PRO	92118403	ø 292 x 20 x 41.5	
				PRO 92118703	ø 285 x 25 x 41.9				TPM0008		
				TPM0007							
518300			Ate	2373807	[o] 23738 20.6	⊖ police veh. ⊖ sports susp. →51999999 →58999999	Ate		2413701	[–] 24137 16.7	
1.8	01/06→	103 / 140	Ate	2415501	[o] 24155 20.6	61000001→ 68→	Ate	epad	2413781	[–] 24137 16.7	
				98029100	L685	→48045597 →41048789	Ate		82062900		
			Ate	82032000			Ate		82503500		
			Ate	82062900				PRO	92118503	ø 278 x 12 x 41.5	
				PRO 92118303	ø 302 x 28 x 45	⊕ police veh.		PRO	92118403	ø 292 x 20 x 41.5	
				PRO 92118703	ø 285 x 25 x 41.9	⊖ police veh.			TPM0008		
				TPM0007							
518400			Ate	2373807	[o] 23738 20.6	→51999999 →58999999 ⊖ police veh. ⊖ sports susp. →51066206 →48999999 ⊕ police veh. ⊕ sports susp.	Ate		2413701	[–] 24137 16.7	
1.8 16V	08/02→	90 / 122					Ate	epad	2413781	[–] 24137 16.7	
1.8 16V	08/02→12/06	81 / 110	Ate	2415501	[o] 24155 20.6		Ate		82062900		
				98029100	L685	→48045597 →41048789	Ate		82503500		
				98031400	L287	41048790→ 48045598→		PRO	92118503	ø 278 x 12 x 41.5	
			Ate	82032000		⊕ police veh. ⊕ sports susp. 51066207→ 58→ ⊖ police veh. ⊖ sports susp. 51064147→ 58→		PRO	92118403	ø 292 x 20 x 41.5	
			Ate	82055100		→51064146 →48999999 ⊖ police veh. ⊖ sports susp.			TPM0008		
			Ate	82062900							
			Ate	82501200		→51066206 →48999999 ⊕ police veh. ⊕ sports susp.					

		kW / hp											
VECTRA C GTS 08/02→06/08													
518400													
1.8 16V	08/02→	90 / 122		PRO	92118303	ø 302 x 28 x 45	⊕ sports susp.						
1.8 16V	08/02→12/06	81 / 110		PRO	92118703	ø 285 x 25 x 41.9	⊖ sports susp.						
					TPM0007								
518500			Ate		2415501	[o] 24155 20.6		Ate		2413701	[–] 24137 16.7		
1.9 CDTI	04/04→	88 / 120			98029100	L685	→48045597 →41048789	Ate	epad	2413781	[–] 24137 16.7		
1.9 CDTI	04/04→	110 / 150			98031400	L287	41048790→ 48045598→	Ate		82062900			
1.9 CDTI	10/05→	74 / 100	Ate		82032000		54064147→ 58→ ⊖ police veh. ⊖ sports susp.	Ate		82503500			
							51066207→ 58→ ⊕ police veh. ⊕ sports susp.		PRO	92118503	ø 278 x 12 x 41.5		
			Ate		82055100		→51064146 →48999999 ⊖ police veh. ⊖ sports susp.		PRO	92118403	ø 292 x 20 x 41.5		
			Ate		82062900					TPM0008			
			Ate		82501200		→51066206 →48999999 ⊕ police veh. ⊕ sports susp.						
				PRO	92118303	ø 302 x 28 x 45	⊕ police veh. ⊕ sports susp.						
				PRO	92118703	ø 285 x 25 x 41.9	⊕ sports susp. ⊕ police veh.						
					TPM0007								
518600			Ate		2373807	[o] 23738 20.6	→51066206 →48999999	Ate		2413701	[–] 24137 16.7		
2.0 16V Turbo	03/03→	129 / 175	Ate		2415501	[o] 24155 20.6		Ate	epad	2413781	[–] 24137 16.7		
					98029100	L685	→48045597 →41048789	Ate		82062900			
			Ate		82032000		51066207→ 58→	Ate		82503500			
			Ate		82062900				PRO	92118503	ø 278 x 12 x 41.5		
			Ate		82501200		→51066206 →48999999		PRO	92118403	ø 292 x 20 x 41.5		
				PRO	92118303	ø 302 x 28 x 45				TPM0008			
					TPM0007								
518700			Ate		2373807	[o] 23738 20.6	⊖ police veh. ⊖ sports susp. →51999999 →58999999	Ate		2413701	[–] 24137 16.7		
2.0 DTI 16V	08/02→	74 / 101			98029100	L685	→48045597 →41048789	Ate	epad	2413781	[–] 24137 16.7		
			Ate		82032000		51064147→ 58→ ⊖ police veh. →51064146 →48999999 ⊖ sports susp. ⊕ police veh.	Ate		82062900			
			Ate		82055100		→51064146 →48999999	Ate		82503500			
			Ate		82062900				PRO	92118503	ø 278 x 12 x 41.5		
				PRO	92118703	ø 285 x 25 x 41.9	→51999999 →58999999		PRO	92118403	ø 292 x 20 x 41.5		
					TPM0007					TPM0008			
518800			Ate		2373807	[o] 23738 20.6	→51999999 →58999999 ⊖ police veh. ⊖ sports susp.	Ate		2413701	[–] 24137 16.7		
2.2 16V	08/02→	108 / 147					→51066206 →48999999	Ate	epad	2413781	[–] 24137 16.7		
2.2 direct	10/03→	114 / 155	Ate		2415501	[o] 24155 20.6		Ate		82062900			
					98029100	L685	→48045597 →41048789	Ate		82503500			
			Ate		82032000		51064147→ 58→ 51066207→ 58→ ⊕ sports susp.		PRO	92118503	ø 278 x 12 x 41.5		
			Ate		82055100		→51064146 →48999999 ⊖ sports susp.		PRO	92118403	ø 292 x 20 x 41.5		
			Ate		82062900					TPM0008			
			Ate		82501200		→51066206 →48999999 ⊕ sports susp.						
				PRO	92118303	ø 302 x 28 x 45	⊕ sports susp.						
				PRO	92118703	ø 285 x 25 x 41.9	⊖ sports susp.						
					TPM0007								
518900			Ate		2373807	[o] 23738 20.6	⊖ police veh. →58999999 →51066206	Ate		2413701	[–] 24137 16.7		
2.2 DTI 16V	08/02→	92 / 125											

N - P

VECTRA C GTS 08/02→06/08

2.2 DTI 16V	08/02→	518900 92 / 125	Ate		2415501	[o] 24155 20.6	51066207→ →51999999 →58999999	Ate	epad	2413781	[–] 24137 16.7
					98029100	L685	→48045597 →41048789	Ate		82062900	
					98031400	L287	41048790→ 48045598→	Ate		82503500	
			Ate		82032000		51064147→ 58→ 51066207→ 58→ ⊕ sports susp.		PRO	92118503	ø 278 x 12 x 41.5
			Ate		82055100		→51064146 →48999999 ⊖ sports susp.		PRO	92118403	ø 292 x 20 x 41.5
			Ate		82062900					TPM0008	
			Ate		82501200		→51066206 →48999999 ⊕ sports susp.				
				PRO	92118303	ø 302 x 28 x 45	⊕ sports susp.				
				PRO	92118703	ø 285 x 25 x 41.9	⊖ sports susp.				
					TPM0007						
2.2 DTI 16V	08/02→06/08	519000 86 / 117	Ate		2373807	[o] 23738 20.6	⊖ police veh. →58999999 →51066206	Ate		2413701	[–] 24137 16.7
			Ate		2415501	[o] 24155 20.6	51066207→ →51999999 →58999999	Ate	epad	2413781	[–] 24137 16.7
			Ate		82032000		51064147→ 58→ 51066207→ 58→ ⊕ sports susp.	Ate		82503500	
			Ate		82055100		→51064146 →48999999 ⊖ sports susp.		PRO	92118503	ø 278 x 12 x 41.5
			Ate		82501200		→51066206 →48999999 ⊕ sports susp.		PRO	92118403	ø 292 x 20 x 41.5
				PRO	92118303	ø 302 x 28 x 45	⊕ sports susp.				
				PRO	92118703	ø 285 x 25 x 41.9	⊖ sports susp.				
					TPM0007						
2.8 V6 Turbo 2.8 V6 Turbo 2.8 V6 Turbo 2.8 V6 Turbo	08/05→ 08/05→ 08/06→ 08/06→	519100 169 / 230 188 / 255 184 / 250 206 / 280	Ate		2391202	[–] 23912 20.4		Ate		2413701	[–] 24137 16.7
					98030100	L302		Ate	epad	2413781	[–] 24137 16.7
			Ate		82062900			Ate		82062900	
			Ate		82071800			Ate		82503500	
				PRO	92118803	ø 314 x 28 x 44.9	⊖ OPC, VRX 61000001→		PRO	92118503	ø 278 x 12 x 41.5
				PRO	92242403	ø 345 x 30 x 45.4	⊕ OPC, VRX 61000001→		PRO	92118403	ø 292 x 20 x 41.5
					TPM0007					TPM0008	
3.0 CDTi	08/05→	519200 135 / 184	Ate		2022401	[o] 20224 20.9		Ate		2413701	[–] 24137 16.7
					98030100	L302	48045598→ 41048790→	Ate	epad	2413781	[–] 24137 16.7
			Ate		82062900			Ate		82062900	
			Ate		82071800			Ate		82503500	
				PRO	92118803	ø 314 x 28 x 44.9			PRO	92118503	ø 278 x 12 x 41.5
					TPM0007				PRO	92118403	ø 292 x 20 x 41.5
										TPM0008	
3.0 CDTI 3.2 V6	06/03→ 08/02→	519300 130 / 177 155 / 211	Ate		2022401	[o] 20224 20.9	31070294→ 38047798→ →51999999 →58999999	Ate		2413701	[–] 24137 16.7
			Ate		2340404	[o] 23404 20.4	⊕ GB ⊕ police veh.	Ate	epad	2413781	[–] 24137 16.7
			Ate		2373807	[o] 23738 20.6	→31070293 →38047797	Ate		82062900	
					98029700	L693	→48045597 →41048789 38047798→ 31070294→	Ate		82503500	
					98030100	L302	48045598→ 41048790→		PRO	92118503	ø 278 x 12 x 41.5
			Ate		82062900				PRO	92118403	ø 292 x 20 x 41.5
			Ate		82501200					TPM0008	
				PRO	92118303	ø 302 x 28 x 45	→31070293 →38047797				

N - P

		kW / hp											
VECTRA C GTS 08/02→06/08													
		519300											
3.0 CDTI	06/03→	130 / 177		PRO	92118803	ø 314 x 28 x 44.9	→51999999 →58999999 31070294→ 38047798→						
3.2 V6	08/02→	155 / 211			TPM0007								
VECTRA C Kombi 10/03→06/08 → VECTRA C Estate, Page 823													
VITA B (73_, 78_, 79_) 03/93→09/00 → CORSA B (73_, 78_, 79_), Page 796													
VITA C (F08, F68) 09/00→12/09 → CORSA C (F08, F68), Page 798													
VIVARO Box (F7) 08/01→													
		519400	Luc		2309902	[+] 23099 18.4		Luc		2398001	[–] 23980 17		
1.9 DI	08/01→	60 / 80											
1.9 DTI	08/01→	74 / 101	Luc		82063500			Luc		82063300			
2.0 16V	08/01→	88 / 120											
2.0 CDTI	08/06→	66 / 90		PRO	92116003	ø 305.5 x 28 x 49.7			ABS	92153700	ø 280 x 12 x 102.2		
2.0 CDTI	08/06→	84 / 114											
2.0 ECOTEC	08/06→	86 / 117											
2.5 CDTI	08/06→	84 / 114											
2.5 CDTI	08/06→	107 / 146											
2.5 DTI	05/03→	99 / 135											
VIVARO Combi (J7) 08/01→													
		519500	Luc		2309902	[+] 23099 18.4		Luc		2398001	[–] 23980 17		
1.9 DI	08/01→	60 / 80											
1.9 DTI	08/01→	74 / 101	Luc		82063500			Luc		82063300			
2.0 16V	08/01→	88 / 120											
2.0 CDTI	08/06→	66 / 90		PRO	92116003	ø 305.5 x 28 x 49.7			ABS	92153700	ø 280 x 12 x 102.2		
2.0 CDTI	08/06→	84 / 114											
2.0 ECOTEC	08/06→	86 / 117											
2.5 CDTI	08/06→	84 / 114											
2.5 CDTI	08/06→	107 / 146											
2.5 DTI	05/03→	99 / 135											
VIVARO Fourgon (F7) 08/01→ → VIVARO Box (F7), Page 829													
VIVARO Kasten (F7) 08/01→ → VIVARO Box (F7), Page 829													
VIVARO Platform/Chassis (E7) 01/06→													
		519600	Luc		2309902	[+] 23099 18.4		Luc		2398001	[–] 23980 17		
1.9 Di	08/06→	60 / 82											
1.9 DTI	08/06→	74 / 101	Luc		82063500			Luc		82063300			
2.0 16V	08/06→	88 / 120											
2.0 CDTI	01/06→	66 / 90		PRO	92116003	ø 305.5 x 28 x 49.7			ABS	92153700	ø 280 x 12 x 102.2		
2.0 CDTI	08/06→	84 / 114											
2.0 ECOTEC	08/06→	86 / 117											
2.5 CDTI	08/06→	84 / 114											
2.5 CDTI	08/06→	107 / 146											
2.5 DTi	08/06→	99 / 135											
VIVARO Pritsche/Fahrgestell (E7) 01/06→ → VIVARO Platform/Chassis (E7), Page 829													
ZAFIRA A (F75_) 04/99→06/05													
		519700	Ate		2383201	[+] 23832 19.6		Bos		2325803	[+] 23258 16.9	⊕ rear disc brake Bosch	
1.6	10/03→06/05	76 / 103											
1.6 16V	04/99→06/05	74 / 101	Ate	epad	2383281	[+] 23832 19.6		Luc		2341703	[+] 23417 15.2	⊕ rear disc brake Lucas	
1.6 CNG	09/01→06/05	71 / 97											
					98029800	L750	⊖ elec. damp. susp.	Luc		82060100		⊕ rear disc brake Lucas	
					98031400	L287	⊕ elec. damp. susp.	Luc		82063300		⊕ rear disc brake	
			Ate		82032000			Bos		82063700		⊕ rear disc brake	
			Ate		82062900			Luc		91049000	ø 230 x 42	⊕ rear drum brake	
				PRO	92091903	ø 280 x 25 x 42				97011800		⊕ rear drum brake	
					TPM0007					84049002	bore ø 20.6 ø 230 x 42	⊕ rear drum brake	
									PRO	92092103	ø 264 x 10 x 42	⊕ rear disc brake	
										TPM0008		⊕ rear disc brake	
										94022600	ø 230,0 x 49.5	⊕ rear drum brake	
		519800	Ate		2383201	[+] 23832 19.6		Bos		2325803	[+] 23258 16.9	Bosch	
1.8	02/03→06/05	81 / 110											
1.8 16V	04/99→09/00	85 / 116	Ate	epad	2383281	[+] 23832 19.6		Luc		2341703	[+] 23417 15.2	Lucas	
1.8 16V	09/00→06/05	92 / 125											
2.0 DI 16V	10/99→06/05	60 / 82			98029800	L750	⊖ elec. damp. susp.	Luc		82060100			
2.0 DTI	11/03→06/05	63 / 86											
2.0 DTI 16V	09/00→06/05	74 / 101			98031400	L287	⊕ elec. damp. susp.	Luc		82063300			
2.2 16V	09/00→06/05	108 / 147											
2.2 DTI 16V	01/02→06/05	86 / 117	Ate		82032000			Bos		82063700			
2.2 DTI 16V	01/02→06/05	92 / 125											
			Ate		82062900				PRO	92092103	ø 264 x 10 x 42		
				PRO	92091903	ø 280 x 25 x 42				TPM0008			
					TPM0007								

N - P

		kW / hp										
ZAFIRA A (F75_) 04/99→06/05												
519900			Ate	2311701	[+] 23117 20.2		Luc	2341703	[+] 23417 15.2		
2.0 OPC	09/01→06/05	141 / 192									
2.0 OPC	11/02→06/05	147 / 200	Ate	82032000			Luc	82060100			
			Ate	82062900			Luc	82063300			
				PRO 92110903	ø 308 x 25 x 42			PRO 92092103	ø 264 x 10 x 42		
				TPM0007				TPM0008			
ZAFIRA B (A05) 07/05→												
520000			Ate	2383201	[+] 23832 19.6		Luc	2341702	[–] 23417 15.2		
1.6	07/05→	77 / 105									
1.6	01/08→	85 / 115	Ate	epad 2383281	[+] 23832 19.6		Luc	epad 2341781	[–] 23417 15.2		
				98031400	L287		Luc	82060100			
			Ate	82032000			Luc	82063300			
			Ate	82062900				PRO 92092103	ø 264 x 10 x 42		
				PRO 92091903	ø 280 x 25 x 42	Ø 280 mm					
				TPM0007							
520100			Ate	2383201	[+] 23832 19.6		Luc	2341702	[–] 23417 15.2		
1.6 CNG	01/06→	69 / 94									
1.6 CNG Turbo	02/09→	110 / 150	Ate	epad 2383281	[+] 23832 19.6		Luc	epad 2341781	[–] 23417 15.2		
				98031400	L287		Luc	82060100			
			Ate	82032000			Luc	82063300			
			Ate	82062900							
				PRO 92110903	ø 308 x 25 x 42						
				TPM0007							
520200			Ate	2383201	[+] 23832 19.6		Luc	2341702	[–] 23417 15.2		
1.7 CDTI	01/08→	81 / 110									
1.7 CDTI	01/08→	92 / 125	Ate	epad 2383281	[+] 23832 19.6		Luc	epad 2341781	[–] 23417 15.2		
1.9 CDTI	07/05→	74 / 100									
1.9 CDTI	07/05→	88 / 120		98031400	L287		Luc	82060100			
1.9 CDTI	07/05→	110 / 150									
2.2	07/05→	110 / 150	Ate	82032000			Luc	82063300			
			Ate	82062900				92167600	ø 278 x 10 x 42	⊕ reinf.brake	
				PRO 92110903	ø 308 x 25 x 42			PRO 92092103	ø 264 x 10 x 42	⊖ reinf.brake	
				TPM0007				PRO 92167603	ø 278 x 10 x 42	⊕ reinf.brake	
520300			Ate	2383201	[+] 23832 19.6		Luc	2341702	[–] 23417 15.2		
1.8	07/05→	103 / 140									
			Ate	epad 2383281	[+] 23832 19.6		Luc	epad 2341781	[–] 23417 15.2		
				98031400	L287		Luc	82060100			
			Ate	82032000			Luc	82063300			
			Ate	82062900				92167600	ø 278 x 10 x 42	⊕ reinf.brake	
				PRO 92091903	ø 280 x 25 x 42	Ø 280 mm		PRO 92092103	ø 264 x 10 x 42	⊖ reinf.brake	
				PRO 92110903	ø 308 x 25 x 42	Ø 308 mm		PRO 92167603	ø 278 x 10 x 42	⊕ reinf.brake	
				TPM0007							
520400			Ate	2383201	[+] 23832 19.6		Luc	2341702	[–] 23417 15.2		
2.0	07/05→	147 / 200									
			Ate	epad 2383281	[+] 23832 19.6		Luc	epad 2341781	[–] 23417 15.2		
				98031400	L287		Luc	82060100			
			Ate	82032000			Luc	82063300			
			Ate	82062900				92167600	ø 278 x 10 x 42	62000001→ 6G000001→	

N - P

		kW / hp											
ZAFIRA B (A05) 07/05→													
		520400											
2.0	07/05→	147 / 200		PRO	92110903	ø 308 x 25 x 42			PRO	92092103	ø 264 x 10 x 42	→5G →52999999
					TPM0007				PRO	92167603	ø 278 x 10 x 42	62000001→ 6G000001→
		520500	Ate		2373807	[o] 23738 20.6		Luc		2341702	[–] 23417 15.2	
2.0	01/06→	177 / 241			98031400	L287		Luc	epad	2341781	[–] 23417 15.2	
			Ate		82032000			Luc		82060100		
			Ate		82062900			Luc		82063300		
				PRO	92149803	ø 321 x 28 x 44				92167600	ø 278 x 10 x 42	
					TPM0007				PRO	92167603	ø 278 x 10 x 42	
ZAFIRA B Van 07/05→													
		520600	Ate		2383201	[+] 23832 19.6		Luc		2341702	[–] 23417 15.2	
1.6 CNG Turbo	02/09→	110 / 150										
1.7 CDTI	01/08→	81 / 110										
1.7 CDTI	01/08→	92 / 125	Ate	epad	2383281	[+] 23832 19.6		Luc	epad	2341781	[–] 23417 15.2	
					98031400	L287		Luc		82060100		
			Ate		82032000			Luc		82063300		
			Ate		82062900				PRO	92092103	ø 264 x 10 x 42	
				PRO	92110903	ø 308 x 25 x 42						
					TPM0007							
		520700	Ate		2383201	[+] 23832 19.6		Luc		2341702	[–] 23417 15.2	
1.8	07/05→	103 / 140										
			Ate	epad	2383281	[+] 23832 19.6		Luc	epad	2341781	[–] 23417 15.2	
					98031400	L287		Luc		82060100		
			Ate		82032000			Luc		82063300		
			Ate		82062900					92167600	ø 278 x 10 x 42	
				PRO	92091903	ø 280 x 25 x 42	Ø 280 mm		PRO	92092103	ø 264 x 10 x 42	
				PRO	92110903	ø 308 x 25 x 42	Ø 308 mm		PRO	92167603	ø 278 x 10 x 42	
					TPM0007							
ZAFIRA TOURER C (P12) 10/11→													
		520800	Man		2441201	[+] 24412 19.1	17" -brake			2509602	[+] 25096 16.2	16" -brake
1.4	10/11→	88 / 120										
1.4	10/11→	103 / 140			2503401	[+] 25034 18.8	16" -brake Ø 300 mm		PRO	92239803	ø 315 x 23 x 45	17" -brake
1.4 LPG	10/11→	103 / 140										
1.6 CNG	10/11→	110 / 150										
1.6 SIDI	12/12→	125 / 170		epad	2503481	[+] 25034 18.8	16" -brake Ø 300 mm					
1.6 SIDI	07/13→	147 / 200										
1.8	10/11→	85 / 115		PRO	92205603	ø 300 x 26 x 45.5	16" -brake					
1.8	10/11→	88 / 120										
1.8	10/11→	103 / 140										
1.8 LPG	10/11→	101 / 137		PRO	92256803	ø 321 x 30 x 45.6	17" -brake					
2.0 CDTi	10/11→	81 / 110										
2.0 CDTi	10/11→	96 / 130										
2.0 CDTi	10/11→	118 / 160										
2.0 CDTi	10/11→	121 / 165										
		520900	Man		2441201	[+] 24412 19.1	17" -brake			2509602	[+] 25096 16.2	16" -brake
1.6 CDTI	02/13→	100 / 136			2503401	[+] 25034 18.8	16" -brake		PRO	92239803	ø 315 x 23 x 45	17" -brake
				epad	2503481	[+] 25034 18.8	16" -brake					
				PRO	92205603	ø 300 x 26 x 45.5	16" -brake					
				PRO	92256803	ø 321 x 30 x 45.6	17" -brake					
		521000	Man		2441201	[+] 24412 19.1	17" -brake			2509602	[+] 25096 16.2	16" -brake →C2
2.0 BiTurbo CDTI	01/13→	143 / 194			2503401	[+] 25034 18.8	16" -brake Ø 300 mm		PRO	92239803	ø 315 x 23 x 45	17" -brake
				epad	2503481	[+] 25034 18.8	16" -brake Ø 300 mm					
				PRO	92205603	ø 300 x 26 x 45.5	16" -brake					

OPEL

OPEL

		kW / hp											
ZAFIRA TOURER C (P12) 10/11→													
2.0 BiTurbo CDTI	01/13→	521000 143 / 194		PRO	**92256803**	ø 321 x 30 x 45.6	17" -brake						

PERODUA

PERODUA

		kW / hp											
ALZA 03/09→													
1.5	03/09→	521100 76 / 103	Ake		**2445103**	[–] 24451 17.2							
					92156100	ø 255 x 22 x 46.3							
KANCIL 08/94→													
0.7	10/98→	521200 33 / 45	Sum		**2078001**	[–] 20780 13.4							
0.7	03/03→	23 / 31											
0.8	08/94→	521300 30 / 41	Sum		**2078001**	[–] 20780 13.4	→06/97						
			Ake		**2196801**	[–] 21968 14	07/97→						
				PRO	**92170003**	ø 211 x 10 x 35	07/97→						
KELISA (L7_) 02/02→													
0.8	05/04→06/07	521400 37 / 50	Sum		**2349402**	[+] 23494 14							
1.0 DVVT	02/02→	43 / 58	Sum		**82506300**								
					92103700	ø 211 x 11 x 41.2							
KENARI (L9_) 10/00→													
1.0	10/00→	521500 41 / 56	Ake		**2349701**	[+] 23497 15.5				**91057500**	ø 180 x 31		
					92103700	ø 211 x 11 x 41.2							
					92129100	ø 234 x 16 x 41							
MYVI 01/06→06/11													
1.0 DVVT	01/06→06/11	521600 43 / 58	Sum		**2526201**	[+] 25262 15.4				**91067900**	ø 180 x 28		
			Man		**82072300**					**97032600**			
					92129100	ø 234 x 16 x 41				**94036400**	ø 180,0 x 33.5		
1.3	01/06→06/11	521700 63 / 86	Sum		**2526201**	[+] 25262 15.4				**91067900**	ø 180 x 28		
					92165600	ø 246 x 17 x 41.9	→12/06			**97032600**			
				PRO	**92204503**	ø 254 x 22 x 42	01/07→			**94036400**	ø 180,0 x 33.5		
NIPPA 08/94→ → KANCIL, Page 832													
VIVA 07/07→													
0.66	07/07→	521800 35 / 48	Sum		**2350701**	[+] 23507 15	vented disc Ø 234 mm			**91065500**	ø 165 x 26		
0.8	07/07→	39 / 53	Ake		**2422901**	[+] 24229 15.3	solid disc Ø 211 mm			**94033900**	ø 165 x 33.5		
1.0	07/07→	45 / 61			**82510300**		solid disc Ø 211 mm						
					92103700	ø 211 x 11 x 41.2							
					92129100	ø 234 x 16 x 41							

PEUGEOT

PEUGEOT

		kW / hp											
106 II (1) 04/96→07/04													
1.0 i	05/96→	521900 33 / 45	Ben		**2090602**	[o] 20906 18	Bendix	Ben		**91031100**	ø 180 x 32	⊕ rim 4 hole	
1.0 i	01/97→	37 / 50	Ate		**2126702**	[+] 21267 17.6	Teves			**91038000**	ø 165 x 32	⊕ rim 3 hole	
1.1 i	05/96→	44 / 60	Ben		**2090603**	[+] 20906 18	Bendix	Ben		**91038201**	ø 180 x 32	⊖ ABS ⊕ rim 4 hole	
			Ate		**82028000**			Luc		**91048000**	ø 203.2 x 38	⊕ ABS	

→

kW / hp

106 II (1) 04/96→07/04

521900													
1.0 i	05/96→	33 / 45			92038500	ø 238 x 8 x 29	⊕ rim 3 hole	Ben		97002700		⊕ rim 4 hole
1.0 i	01/97→	37 / 50		PRO	92029803	ø 247 x 10 x 34	⊕ rim 4 hole	Ben		97004600		⊕ rim 3 hole
1.1 i	05/96→	44 / 60			TPM0012			Ben		97010400		⊕ ABS
										84038002	bore ø 19 ø 165 x 32	⊕ rim 3 hole
								Ben		84038204	bore ø 19 ø 180 x 32	⊕ autom adjustm. ⊕ rim 4 hole
								Luc		84048004	bore ø 20.6 ø 203.2 x 38	⊕ ABS →Orga 8056 →1998-11-28
								Luc		84048006	bore ø 20.6 ø 203.2 x 38	Orga 8057→ 1998-11-29→ ⊕ ABS
										94028200	ø 203 x 46.5	
										94014100	ø 164,9 x 38.5	⊕ rim 3 hole
										94014200	ø 179,9 x 46	
										94016900	ø 180,0 x 40.5	⊕ rim 4 hole
522000													
1.1	09/00→10/02	42 / 57	Ben		2090602	[o] 20906 18	Bendix	Ben		91031100	ø 180 x 32	⊕ rim 4 hole
			Ate		2126702	[+] 21267 17.6	Teves			91038000	ø 165 x 32	⊕ rim 3 hole
			Ben		2090603	[+] 20906 18	Bendix	Ben		91038201	ø 180 x 32	⊖ ABS ⊕ rim 4 hole
			Ate		82028000			Luc		91048000	ø 203.2 x 38	⊕ ABS
					92038500	ø 238 x 8 x 29	⊕ rim 3 hole	Ben		97002700		⊕ rim 4 hole
				PRO	92029803	ø 247 x 10 x 34	⊕ rim 4 hole	Ben		97004600		⊕ rim 3 hole
								Ben		97010400		⊕ ABS
										84038002	bore ø 19 ø 165 x 32	⊕ rim 3 hole
								Ben		84038204	bore ø 19 ø 180 x 32	⊕ autom adjustm. ⊕ rim 4 hole
								Luc		84048004	bore ø 20.6 ø 203.2 x 38	⊕ ABS
										94014100	ø 164,9 x 38.5	⊕ rim 3 hole
										94016900	ø 180,0 x 40.5	⊕ rim 4 hole
522100													
1.1 i	01/97→	40 / 54	Ben		2090602	[o] 20906 18	Bendix	Ben		91031100	ø 180 x 32	⊕ rim 4 hole
			Ate		2126702	[+] 21267 17.6	Teves			91038000	ø 165 x 32	⊕ rim 3 hole
			Ben		2090603	[+] 20906 18	Bendix	Ben		91038201	ø 180 x 32	⊖ ABS ⊕ rim 4 hole
			Ate		82028000			Luc		91048000	ø 203.2 x 38	⊕ ABS
					92038500	ø 238 x 8 x 29	⊕ rim 3 hole	Ben		97002700		⊕ rim 4 hole
				PRO	92029803	ø 247 x 10 x 34	⊕ rim 4 hole	Ben		97004600		⊕ rim 3 hole
					TPM0012			Ben		97010400		⊕ ABS
										84038002	bore ø 19 ø 165 x 32	⊕ rim 3 hole
								Ben		84038204	bore ø 19 ø 180 x 32	⊕ autom adjustm.
								Luc		84048004	bore ø 20.6 ø 203.2 x 38	⊕ ABS →Orga 8056 →1998-11-28
								Luc		84048006	bore ø 20.6 ø 203.2 x 38	Orga 8057→ 1998-11-29→ ⊕ ABS
										94028200	ø 203 x 46.5	
										94014100	ø 164,9 x 38.5	⊕ rim 3 hole
										94014200	ø 179,9 x 46	
										94016900	ø 180,0 x 40.5	⊕ rim 4 hole
522200													
1.4 i	05/96→	55 / 75	Ben		2090602	[o] 20906 18		Ben		91031100	ø 180 x 32	
1.5 D	05/96→	40 / 55	Ben		2090603	[+] 20906 18		Ben		91038201	ø 180 x 32	⊖ ABS

N - P

		kW / hp									
106 II (1) 04/96→07/04											
522200											
1.4 i	05/96→	55 / 75		PRO	92029803	ø 247 x 10 x 34		Luc	91048000	ø 203.2 x 38	⊕ ABS
1.5 D	05/96→	40 / 55			TPM0012			Ben	97002700		
								Ben	97010400		⊕ ABS
								Ben	84038204	bore ø 19 ø 180 x 32	⊕ autom adjustm.
								Luc	84048004	bore ø 20.6 ø 203.2 x 38	⊕ ABS →Orga 8056 →1998-11-28
								Luc	84048006	bore ø 20.6 ø 203.2 x 38	Orga 8057→ 1998-11-29→ ⊕ ABS
									94028200	ø 203 x 46.5	
									94014200	ø 179,9 x 46	
									94016900	ø 180,0 x 40.5	
522300			Ben		2090602	[o] 20906 18		Ben	91031100	ø 180 x 32	
1.5 D	04/98→	42 / 57	Ben		2090603	[+] 20906 18		Ben	91038201	ø 180 x 32	⊖ ABS
				PRO	92029803	ø 247 x 10 x 34		Luc	91048000	ø 203.2 x 38	⊕ ABS
					TPM0012			Ben	97002700		
								Ben	97010400		⊕ ABS
								Ben	84038204	bore ø 19 ø 180 x 32	⊕ autom adjustm.
								Luc	84048006	bore ø 20.6 ø 203.2 x 38	⊕ ABS
									94028200	ø 203 x 46.5	
									94014200	ø 179,9 x 46	
									94016900	ø 180,0 x 40.5	
522400			Ate		2182702	[–] 21827 17.3	vented disc	Ben	2097401	[o] 20974 11	⊕ rear disc brake
1.6 i	05/96→	65 / 89	Ate		2143001	[+] 21430 17.3	vented disc	Ben	82029500		
			Ben		2090603	[+] 20906 18	solid disc	Ben	91038201	ø 180 x 32	⊕ rear drum brake ⊖ ABS
			Ate		82030600		vented disc	Luc	91048000	ø 203.2 x 38	⊕ rear drum brake ⊕ ABS
			Ate		82062900			Ben	97010400		⊕ rear drum brake ⊕ ABS
				PRO	92029803	ø 247 x 10 x 34		Luc	84048004	bore ø 20.6 ø 203.2 x 38	⊕ rear drum brake ⊕ ABS →Orga 8056 →1998-11-28
				PRO	92043103	ø 247 x 20.4 x 34.2		Luc	84048006	bore ø 20.6 ø 203.2 x 38	Orga 8057→ 1998-11-29→ ⊕ ABS
					TPM0012				92055003	ø 247 x 8 x 25.3	⊕ rear disc brake
									TPM0012		
									94028200	ø 203 x 46.5	
									94014200	ø 179,9 x 46	
522500			Ate		2182702	[–] 21827 17.3	vented disc	Ben	2097401	[o] 20974 11	⊕ rear disc brake
1.6 i	05/96→	74 / 101	Ate		2143001	[+] 21430 17.3	vented disc	Ben	82029500		
			Ben		2090603	[+] 20906 18	solid disc	Ben	91038201	ø 180 x 32	⊖ ABS
			Ate		82030600		vented disc	Luc	91048000	ø 203.2 x 38	⊕ ABS
			Ate		82062900			Ben	97010400		⊕ ABS
				PRO	92029803	ø 247 x 10 x 34		Luc	84048004	bore ø 20.6 ø 203.2 x 38	⊕ rear drum brake ⊕ ABS →Orga 8056 →1998-11-28
				PRO	92043103	ø 247 x 20.4 x 34.2		Luc	84048006	bore ø 20.6 ø 203.2 x 38	Orga 8057→ 1998-11-29→ ⊕ ABS
					TPM0012				92055003	ø 247 x 8 x 25.3	⊕ rear disc brake
									TPM0012		
									94014200	ø 179,9 x 46	

kW / hp													
106 II (1) 04/96→07/04													
	522600	Ate		**2182702**	[–] 21827 17.3	vented disc	Ben		**2097401**	[o] 20974 11	⊕ rear disc brake
1.6 S16 05/96→ 87 / 118		Ate		**2143001**	[+] 21430 17.3	vented disc	Ben		**82029500**		
		Ben		**2090603**	[+] 20906 18	solid disc	Ben		**91038201**	ø 180 x 32	⊖ ABS
		Ate		**82030600**		vented disc	Luc		**91048000**	ø 203.2 x 38	⊕ ABS
		Ate		**82062900**			Ben		**97010400**		⊕ ABS
			PRO	**92029803**	ø 247 x 10 x 34		Luc		**84048004**	bore ø 20.6 ø 203.2 x 38	⊕ rear drum brake
			PRO	**92043103**	ø 247 x 20.4 x 34.2			PRO	**92055003**	ø 247 x 8 x 25.3	⊕ rear disc brake
				TPM0012					**TPM0012**		
									94014200	ø 179,9 x 46	
	522700	Ben		**2090602**	[o] 20906 18		Ben		**91038201**	ø 180 x 32	⊖ ABS ⊕ rim 4 hole
Electric 04/96→07/04 20 / 27		Ben		**2090603**	[+] 20906 18		Luc		**91048000**	ø 203.2 x 38	⊕ ABS
		Ben		**82017500**			Ben		**97010400**		⊕ ABS
		Ate		**82062900**		vented disc	Ben		**84038204**	bore ø 19 ø 180 x 32	⊕ autom adjustm.
			PRO	**92029803**	ø 247 x 10 x 34				**94016900**	ø 180,0 x 40.5	⊕ rim 4 hole
106 Mk II (1) 04/96→07/04 → 106 II (1), Page 832											
106 Van (1_) 09/91→07/04											
	522800	Ben		**2090602**	[o] 20906 18	Bendix	Ben		**91031100**	ø 180 x 32	⊕ ABS ⊕ rim 4 hole
1.0 09/91→03/01 33 / 45		Ate		**2126702**	[+] 21267 17.6	Teves			**91038000**	ø 165 x 32	⊕ rim 3 hole
		Ben		**2090603**	[+] 20906 18	Bendix	Ben		**91038201**	ø 180 x 32	⊕ autom adjustm. ⊕ ABS ⊕ rim 4 hole
		Ate		**82028000**			Ben		**97002700**		⊕ ABS ⊕ rim 4 hole
				82030400		Bendix ⊕ ABS	Ben		**97004600**		⊕ rim 3 hole
				92038500	ø 238 x 8 x 29	⊕ rim 3 hole			**84038002**	bore ø 19 ø 165 x 32	⊕ rim 3 hole
			PRO	**92029803**	ø 247 x 10 x 34	⊕ rim 4 hole	Ben		**84038205**	bore ø 19 ø 180 x 32	⊕ autom adjustm. ⊕ ABS
			PRO	**92043103**	ø 247 x 20.4 x 34.2	⊕ ABS			**94014100**	ø 164,9 x 38.5	⊕ rim 3 hole
									94016900	ø 180,0 x 40.5	⊕ ABS ⊕ rim 4 hole
	522900	Ate		**2182702**	[–] 21827 17.3	Teves	Ben		**91031100**	ø 180 x 32	
1.5 D 05/96→03/01 40 / 55		Ben		**2090602**	[o] 20906 18	Bendix	Ben		**91038201**	ø 180 x 32	⊕ autom adjustm.
1.5 D 10/00→03/01 42 / 57		Ben		**2090603**	[+] 20906 18	Bendix	Ben		**97002700**		
		Ate		**82028000**			Ben		**84038204**	bore ø 19 ø 180 x 32	⊕ autom adjustm.
				82030400		Bendix ⊕ ABS			**94016900**	ø 180,0 x 40.5	
		Ate		**82062900**							
			PRO	**92029803**	ø 247 x 10 x 34						
			PRO	**92043103**	ø 247 x 20.4 x 34.2	⊕ ABS					
	523000	Ben		**2090602**	[o] 20906 18		Ben		**91038201**	ø 180 x 32	⊕ rim 4 hole ⊖ ABS
Electric 04/96→07/04 20 / 27		Ben		**2090603**	[+] 20906 18		Luc		**91048000**	ø 203.2 x 38	⊕ ABS
		Ben		**82017500**			Ben		**97010400**		⊕ ABS
		Ate		**82062900**		vented disc	Ben		**84038204**	bore ø 19 ø 180 x 32	⊕ autom adjustm.
			PRO	**92029803**	ø 247 x 10 x 34				**94016900**	ø 180,0 x 40.5	⊕ rim 4 hole
107 06/05→											
	523100	Bos		**2395901**	[–] 23959 17.5		Bos		**91064500**	ø 200 x 32	
1.0 06/05→ 50 / 68		Bos		**82054300**			Bos		**97032000**		
1.4 HDi 06/05→ 40 / 54											

		kW / hp									
107 06/05→											
1.0	06/05→	523100 50 / 68	Bos	82063800			Bos	84064501	bore ø 17.5 ø 200 x 32	
1.4 HDi	06/05→	40 / 54	Bos	82510100				94026500	ø 200,0 x 44	
			PRO	92141903	ø 247 x 20 x 35.3					
108 05/14→											
1.0 VTi	05/14→	523200 51 / 69	Bos	2395901	[–] 23959 17.5		Bos	91064500	ø 200 x 32	
			PRO	92141903	ø 247 x 20 x 35.3		Bos	97032000		
								94026500	ø 200,0 x 44	
1.2	05/14→	523300 60 / 82	Bos	2395901	[–] 23959 17.5		Bos	91064500	ø 200 x 32	
			PRO	92141903	ø 247 x 20 x 35.3		Bos	97032000		
							Bos	84064501	bore ø 17.5 ø 200 x 32	
								94026500	ø 200,0 x 44	
205 Box 03/94→											
1.7 Diesel	03/94→	523400 44 / 60	Ate	2182702	[–] 21827 17.3		Luc	91031800	ø 180 x 40	
			Ate	82030600			Ben	97002800		
			PRO	92043103	ø 247 x 20.4 x 34.2		Luc	84031806	bore ø 20.6 ø 180 x 40	
								94011900	ø 179,9 x 53.5	
205 Fourgonnette 03/94→ → 205 Box, Page 836											
205 Kasten 03/94→ → 205 Box, Page 836											
205 Van 03/94→ → 205 Box, Page 836											
206 CC (2D) 09/00→12/03											
1.6	09/01→12/03	523500 81 / 110	Bos	2395401	[–] 23954 19		Ben	2097401	[o] 20974 11	
			PRO	92111503	ø 266 x 22 x 34		PRO	92055003	ø 247 x 8 x 25.3	
				TPM0012						
1.6 16V	09/00→	523600 80 / 109	Bos	2333201	[–] 23332 18	Orga 8778→ 2000-11-19→ →Orga 9078 →2001-09-15	Ben	2097401	[o] 20974 11	
			Luc	2334602	[–] 23346 19.3	Orga 10950→ 2006-10-31→	Ben	82029500		
			Bos	2339602	[–] 23396 18	→Orga 8777 →2000-11-18	PRO	92055003	ø 247 x 8 x 25.3	
			Bos	2395401	[–] 23954 19	Orga 9079→ 2001-09-16→		TPM0012		
			Bos	82063700						
			PRO	92048103	ø 266 x 20.5 x 27.4	→Orga 9078 →2001-09-15				
			PRO	92111503	ø 266 x 22 x 34	Orga 9079→ 2001-09-16→				
				TPM0012						
1.6 HDi 110	04/05→	523700 80 / 109	Bos	2395401	[–] 23954 19	Orga 9079→ 2001-09-16→	Ben	2097401	[o] 20974 11	
			Bos	82063700			Ben	82029500		
			PRO	92111503	ø 266 x 22 x 34	Orga 9079→ 2001-09-16→	PRO	92055003	ø 247 x 8 x 25.3	
				TPM0012				TPM0012		
2.0 S16	09/00→	523800 100 / 136	Bos	2333201	[–] 23332 18	Orga 8778→ 2000-11-19→ →Orga 9078 →2001-09-15	Ben	2097401	[o] 20974 11	
			Bos	2395401	[–] 23954 19	Orga 9079→ 2001-09-16→	Ben	82029500		
			Bos	2198804	[+] 21988 18	→Orga 8777 →2000-11-18	PRO	92055003	ø 247 x 8 x 25.3	
			Bos	82054200				TPM0012		
			Bos	82063700		→Orga 9078 →2001-09-15				
			Bos	82063800						
			Bos	82510100						

→

kW / hp

206 CC (2D) 09/00→12/03

523800												
2.0 S16	09/00→	100 / 136	PRO	92048103	ø 266 x 20.5 x 27.4	→Orga 9078 →2001-09-15						
			PRO	92111503	ø 266 x 22 x 34	Orga 9079→ 2001-09-16→						
				TPM0012								

206 Hatchback (2A/C) 08/98→11/09

523900			Bos	2359703	[–] 23597 18		Luc		91048000	ø 203.2 x 38	→Orga 09456	
1.0	06/01→12/05	52 / 70	PRO	92092803	ø 247 x 13 x 34.2		Bos		91053800	ø 180 x 32	⊖ ABS	
				TPM0012			Luc		91061800	ø 203.2 x 38	Orga 09457→	
									94028200	ø 203 x 46.5	→Orga 09456	
									94014200	ø 179,9 x 46	⊖ ABS	
524000			Bos	2198004	[–] 21980 18	→Orga 8882 →2001-03-03	Ben		2097401	[o] 20974 11	⊕ rear disc brake	
1.0	09/02→02/07	45 / 61	Bos	2359703	[–] 23597 18	Orga 8883→ 2001-03-04→	Luc		91048000	ø 203.2 x 38	⊕ ABS →Orga 9456 →2002-09-28	
			Bos	82054200			Bos		91053800	ø 180 x 32	⊖ ABS	
			Bos	82063800			Luc		91061800	ø 203.2 x 38	⊕ ABS Orga 9457→ 2002-09-29→	
			Bos	82510100			Ben		97005800		⊖ ABS	
			PRO	92029803	ø 247 x 10 x 34		Ben		97010400		⊕ ABS →Orga 9456 →2002-09-28	
			PRO	92092803	ø 247 x 13 x 34.2	⊕ ABS	Luc		83061800	bore ø 20.6 ø 203.2 x 38	Lucas ⊕ ABS Orga 9457→ 2002-09-29→	
				TPM0012			Bos		84053801	bore ø 20.6 ø 180 x 32	Bosch ⊖ ABS ⊕ integ. br.pow. regul.	
							Luc		84061801	bore ø 20.6 ø 203.2 x 38	Lucas ⊕ ABS Orga 9457→ 2002-09-29→	
								PRO	92055003	ø 247 x 8 x 25.3	⊕ rear disc brake	
									94014200	ø 179,9 x 46	⊖ ABS	
524100			Bos	2198004	[–] 21980 18	→Orga 8882 →2001-03-03	Ben		2097401	[o] 20974 11	⊕ rear disc brake	
1.0	09/02→02/07	48 / 65										
1.1	08/98→07/00	40 / 54	Bos	2359703	[–] 23597 18	Orga 8883→ 2001-03-04→	Luc		91048000	ø 203.2 x 38	⊕ ABS →Orga 9456 →2002-09-28	
			Bos	82054200			Bos		91053800	ø 180 x 32	⊖ ABS	
			Bos	82063800			Luc		91061800	ø 203.2 x 38	⊕ ABS Orga 9457→ 2002-09-29→	
			Bos	82510100			Ben		97005800		⊖ ABS	
			PRO	92029803	ø 247 x 10 x 34		Ben		97010400		⊕ ABS →Orga 9456 →2002-09-28	
			PRO	92092803	ø 247 x 13 x 34.2	⊕ ABS	Luc		83061800	bore ø 20.6 ø 203.2 x 38	⊕ ABS Orga 9457→ 2002-09-29→	
				TPM0012			Bos		84053800	bore ø 19 ø 180 x 32	⊖ ABS	
							Bos		84053801	bore ø 20.6 ø 180 x 32	⊖ ABS ⊕ integ. br.pow. regul.	
							Luc		84061801	bore ø 20.6 ø 203.2 x 38	⊕ ABS Orga 9457→ 2002-09-29→	
								PRO	92055003	ø 247 x 8 x 25.3	⊕ rear disc brake	
									94014200	ø 179,9 x 46	⊖ ABS	
524200			Bos	2198004	[–] 21980 18	→Orga 8882 →2001-03-03	Luc		91048000	ø 203.2 x 38	⊕ ABS →Orga 9456 →2002-09-28	
1.1 i	09/98→	44 / 60	Bos	2359703	[–] 23597 18	Orga 8883→ 2001-03-04→	Bos		91053800	ø 180 x 32	⊖ ABS	
			Bos	82054200			Luc		91061800	ø 203.2 x 38	⊕ ABS Orga 9457→ 2002-09-29→	
			Bos	82063800			Ben		97005800		⊖ ABS	
			Bos	82510100			Ben		97010400		⊕ ABS →Orga 9456 →2002-09-28	
			PRO	92029803	ø 247 x 10 x 34		Luc		83061800	bore ø 20.6 ø 203.2 x 38	⊕ ABS Orga 9457→ 2002-09-29→	
			PRO	92092803	ø 247 x 13 x 34.2	⊕ ABS Orga 09975→ 2004-03-01→	Luc		84048006	bore ø 20.6 ø 203.2 x 38	⊕ ABS →Orga 9456 →2002-09-28	
			PRO	92043103	ø 247 x 20.4 x 34.2	Orga 09975→ 2004-03-01→	Bos		84053800	bore ø 19 ø 180 x 32	⊖ ABS	

N - P

		kW / hp										
206 Hatchback (2A/C) 08/98→11/09												
1.1 i	09/98→	524200 44 / 60		TPM0012			Bos	84053801	bore ø 20.6 ø 180 x 32	⊖ ABS ⊕ integ. br.pow. regul.
							Luc	84061801	bore ø 20.6 ø 203.2 x 38	⊕ ABS Orga 9457→ 2002-09-29→
								94028200	ø 203 x 46.5	
								94014200	ø 179,9 x 46	⊖ ABS
1.4 16V	10/03→	524300 65 / 88	Bos	2395401	[–] 23954 19		Ben	2097401	[o] 20974 11	
			Bos	82063700			Luc	91061800	ø 203.2 x 38	
				92111503	ø 266 x 22 x 34		Luc	83061800	bore ø 20.6 ø 203.2 x 38	
				TPM0012			Luc	84061801	bore ø 20.6 ø 203.2 x 38	
								92055003	ø 247 x 8 x 25.3	
								TPM0012		
								94028200	ø 203 x 46.5	
1.4 CNG	05/06→09/07	524400 55 / 75	Bos	2359703	[–] 23597 18		Bos	91053800	ø 180 x 32	⊖ ABS
				92092803	ø 247 x 13 x 34.2		Luc	91061800	ø 203.2 x 38	⊕ ABS →01/07
				92043103	ø 247 x 20.4 x 34.2		Luc	83061800	bore ø 20.6 ø 203.2 x 38	⊕ ABS →01/07
				TPM0012			Bos	84053800	bore ø 19 ø 180 x 32	⊖ ABS
							Luc	84061801	bore ø 20.6 ø 203.2 x 38	⊕ ABS →01/07
								94028200	ø 203 x 46.5	⊕ ABS
								94014200	ø 179,9 x 46	⊖ ABS
1.4 Flex	01/06→11/09	524500 59 / 80	Bos	2359703	[–] 23597 18		Luc	91061800	ø 203.2 x 38	
1.4 LPG	05/06→09/07	55 / 75		92092803	ø 247 x 13 x 34.2			94028200	ø 203 x 46.5	
				92043103	ø 247 x 20.4 x 34.2					
				TPM0012						
1.4 Flex	01/06→11/09	524600 60 / 82	Bos	2359703	[–] 23597 18		Bos	91053800	ø 180 x 32	⊖ ABS
				92092803	ø 247 x 13 x 34.2		Luc	91061800	ø 203.2 x 38	Orga 1170588→ ⊕ ABS
				92043103	ø 247 x 20.4 x 34.2			94026600	ø 203,0 x 42	Orga 1170588→ ⊕ ABS
				TPM0012				94028200	ø 203 x 46.5	Orga 12288YQ→ ⊕ ABS
								94014200	ø 179,9 x 46	⊖ ABS
1.4 HDi	09/02→02/07	524700 51 / 69	Bos	2359703	[–] 23597 18		Ben	2097401	[o] 20974 11	⊕ rear disc brake
			Bos	82054200			Bos	91053800	ø 180 x 32	⊖ ABS
			Bos	82063800			Luc	91061800	ø 203.2 x 38	⊕ ABS
			Bos	82510100			Ben	97005800		⊖ ABS
				92043103	ø 247 x 20.4 x 34.2		Luc	83061800	bore ø 20.6 ø 203.2 x 38	⊕ ABS
				TPM0012			Bos	84053800	bore ø 19 ø 180 x 32	⊖ ABS
							Bos	84053801	bore ø 20.6 ø 180 x 32	⊖ ABS ⊕ integ. br.pow. regul.
							Luc	84061801	bore ø 20.6 ø 203.2 x 38	⊕ ABS
								92055003	ø 247 x 8 x 25.3	⊕ rear disc brake
								94028200	ø 203 x 46.5	⊕ ABS
								94014200	ø 179,9 x 46	⊖ ABS
1.4 HDi eco 70	09/01→	524800 50 / 68	Bos	2359703	[–] 23597 18		Ben	2097401	[o] 20974 11	⊕ rear disc brake
			Bos	82054200			Luc	91048000	ø 203.2 x 38	⊕ ABS →Orga 9456 →2002-09-28

206 Hatchback (2A/C) 08/98→11/09

		kW / hp											
1.4 HDi eco 70	09/01→	524800 50 / 68	Bos		82063800			Bos		91053800	ø 180 x 32	⊖ ABS
			Bos		82510100			Luc		91061800	ø 203.2 x 38	⊕ ABS Orga 9457→ 2002-09-29→
				PRO	92092803	ø 247 x 13 x 34.2		Ben		97005800		⊖ ABS
				PRO	92043103	ø 247 x 20.4 x 34.2		Ben		97010400		⊕ ABS →Orga 9456 →2002-09-28
					TPM0012			Luc		83061800	bore ø 20.6 ø 203.2 x 38	⊕ ABS Orga 9457→ 2002-09-29→
								Luc		84048006	bore ø 20.6 ø 203.2 x 38	⊕ ABS →Orga 9456 →2002-09-28
								Bos		84053800	bore ø 19 ø 180 x 32	⊖ ABS
								Bos		84053801	bore ø 20.6 ø 180 x 32	⊖ ABS ⊕ integ. br.pow. regul.
								Luc		84061801	bore ø 20.6 ø 203.2 x 38	⊕ ABS Orga 9457→ 2002-09-29→
									PRO	92055003	ø 247 x 8 x 25.3	⊕ rear disc brake
										94028200	ø 203 x 46.5	⊕ ABS
										94014200	ø 179,9 x 46	⊖ ABS
1.4 i	09/98→	524900 55 / 75	Bos		2359703	[–] 23597 18		Ben		2097401	[o] 20974 11	⊕ rear disc brake
			Bos		82054200			Luc		91048000	ø 203.2 x 38	⊕ ABS →Orga 9456 →2002-09-28
			Bos		82063800			Bos		91053800	ø 180 x 32	⊖ ABS
			Bos		82510100			Luc		91061800	ø 203.2 x 38	⊕ ABS Orga 9457→ 2002-09-29→
				PRO	92092803	ø 247 x 13 x 34.2		Ben		97005800		⊖ ABS
				PRO	92043103	ø 247 x 20.4 x 34.2		Ben		97010400		⊕ ABS →Orga 9456 →2002-09-28
					TPM0012			Luc		83061800	bore ø 20.6 ø 203.2 x 38	⊕ ABS Orga 9457→ 2002-09-29→
								Luc		84048006	bore ø 20.6 ø 203.2 x 38	⊕ ABS →Orga 9456 →2002-09-28
								Bos		84053800	bore ø 19 ø 180 x 32	⊖ ABS
								Bos		84053801	bore ø 20.6 ø 180 x 32	⊖ ABS ⊕ integ. br.pow. regul.
								Luc		84061801	bore ø 20.6 ø 203.2 x 38	⊕ ABS Orga 9457→ 2002-09-29→
									PRO	92055003	ø 247 x 8 x 25.3	⊕ rear disc brake
										94028200	ø 203 x 46.5	
										94014200	ø 179,9 x 46	⊖ ABS
1.6	05/05→07/08	525000 81 / 110	Bos		2395401	[–] 23954 19		Bos		91053800	ø 180 x 32	⊖ ABS
1.6 16V	06/01→04/05	79 / 107		PRO	92111503	ø 266 x 22 x 34		Luc		91061800	ø 203.2 x 38	Orga 1170588→ ⊕ ABS
1.6 Flex	05/05→07/08	83 / 113			TPM0012					94026600	ø 203,0 x 42	Orga 1170588→ ⊕ ABS
										94028200	ø 203 x 46.5	Orga 12288YQ→ ⊕ ABS
										94014200	ø 179,9 x 46	⊖ ABS
1.6 16V	12/00→	525100 80 / 109	Bos		2333201	[–] 23332 18	Orga 8778→ 2000-11-19→ →Orga 9078 →2001-09-15	Ben		2097401	[o] 20974 11	
1.6 Flex	05/05→07/08	81 / 110	Luc		2334602	[–] 23346 19.3	Orga 10950→ 2006-10-31→	Ben		82029500		
			Bos		2339602	[–] 23396 18	→Orga 8777 →2000-11-18	Luc		91061800	ø 203.2 x 38	Orga 10458→ 2005-06-26→ →Orga 11040 →2007-01-29
			Bos		2395401	[–] 23954 19	Orga 9079→ 2001-09-16→ →Orga 10949 →2006-10-30		PRO	92055003	ø 247 x 8 x 25.3	
			Bos		82063700					TPM0012		
				PRO	92048103	ø 266 x 20.5 x 27.4	→Orga 9078 →2001-09-15			94028200	ø 203 x 46.5	
				PRO	92111503	ø 266 x 22 x 34	Orga 9079→ 2001-09-16→			94028200	ø 203 x 46.5	Orga 10458→ 2005-06-26→
					TPM0012							
1.6 HDi 110	05/04→	525200 80 / 109	Bos		2395401	[–] 23954 19	Orga 9079→ 2001-09-16→	Ben		2097401	[o] 20974 11	

N - P

		kW / hp									
206 Hatchback (2A/C) 08/98→11/09											
1.6 HDi 110	05/04→	525200 80 / 109	Bos		**82063700**			Ben		**82029500**		
				PRO	**92111503**	ø 266 x 22 x 34	Orga 9079→ 2001-09-16→	Luc		**91061800**	ø 203.2 x 38	
					TPM0012				PRO	**92055003**	ø 247 x 8 x 25.3	
										TPM0012		
1.6 i	09/98→12/00	525300 65 / 89	Bos		**2359703**	[–] 23597 18		Ben		**2097401**	[o] 20974 11	⊕ rear disc brake
			Bos		**82054200**			Luc		**91048000**	ø 203.2 x 38	⊕ ABS
			Bos		**82063800**			Bos		**91053800**	ø 180 x 32	⊖ ABS
			Bos		**82510100**			Ben		**97005800**		⊖ ABS
				PRO	**92043103**	ø 247 x 20.4 x 34.2		Ben		**97010400**		⊕ ABS
					TPM0012			Luc		**84048006**	bore ø 20.6 ø 203.2 x 38	⊕ ABS Orga 9457→ 2002-09-29→
								Bos		**84053802**	bore ø 19 ø 180 x 32	⊖ ABS ⊕ integ. br.pow. regul.
									PRO	**92055003**	ø 247 x 8 x 25.3	⊕ rear disc brake
										94028200	ø 203 x 46.5	⊕ ABS
										94014200	ø 179,9 x 46	⊖ ABS
1.9 D	09/98→11/01	525400 51 / 69	Bos		**2359703**	[–] 23597 18		Ben		**2097401**	[o] 20974 11	⊕ rear disc brake
			Bos		**82054200**			Luc		**91048000**	ø 203.2 x 38	⊕ ABS
			Bos		**82063800**			Bos		**91053800**	ø 180 x 32	⊖ ABS
			Bos		**82510100**			Ben		**97005800**		⊖ ABS
				PRO	**92043103**	ø 247 x 20.4 x 34.2		Ben		**97010400**		⊕ ABS
					TPM0012			Luc		**84048006**	bore ø 20.6 ø 203.2 x 38	⊕ ABS Orga 9457→ 2002-09-29→
								Bos		**84053800**	bore ø 19 ø 180 x 32	⊖ ABS
								Bos		**84053802**	bore ø 19 ø 180 x 32	⊖ ABS ⊕ integ. br.pow. regul.
									PRO	**92055003**	ø 247 x 8 x 25.3	⊕ rear disc brake
										94028200	ø 203 x 46.5	⊕ ABS
										94014200	ø 179,9 x 46	⊖ ABS
2.0 HDI 90	12/99→	525500 66 / 90	Bos		**2333201**	[–] 23332 18	Orga 8778→ 2000-11-19→ →Orga 9078 →2001-09-15	Ben		**2097401**	[o] 20974 11	⊕ rear disc brake
			Luc		**2334602**	[–] 23346 19.3	Orga 10892→ 2006-09-03→	Luc		**91048000**	ø 203.2 x 38	→Orga 9456 →2002-09-28
			Bos		**2339602**	[–] 23396 18	→Orga 8777 →2000-11-18	Luc		**91061800**	ø 203.2 x 38	Orga 9457→ 2002-09-29→
			Bos		**2395401**	[–] 23954 19	Orga 9079→ 2001-09-16→ →Orga 10891 →2006-09-02	Ben		**97010400**		→Orga 9456 →2002-09-28
			Bos		**82063700**			Luc		**83061800**	bore ø 20.6 ø 203.2 x 38	Orga 9457→ 2002-09-29→
				PRO	**92048103**	ø 266 x 20.5 x 27.4	→Orga 9078 →2001-09-15	Luc		**84048006**	bore ø 20.6 ø 203.2 x 38	⊕ ABS →Orga 9456 →2002-09-28
				PRO	**92111503**	ø 266 x 22 x 34	Orga 9079→ 2001-09-16→	Luc		**84061801**	bore ø 20.6 ø 203.2 x 38	Orga 9457→ 2002-09-29→
					TPM0012				PRO	**92055003**	ø 247 x 8 x 25.3	⊕ rear disc brake
										94028200	ø 203 x 46.5	
2.0 RC	07/03→	525600 130 / 177	Bos		**2360001**	[–] 23600 19		Ben		**2097401**	[o] 20974 11	
			Bos		**82054200**			Ben		**82029500**		
			Bos		**82063800**				PRO	**92055003**	ø 247 x 8 x 25.3	
			Bos		**82510100**					**TPM0012**		
				PRO	**92111603**	ø 283 x 26 x 34						
					TPM0012							

kW / hp

206 Hatchback (2A/C) 08/98→11/09

525700
2.0 S16 04/99→10/00 99 / 135
2.0 S16 06/99→ 100 / 136

Bos		2333201	[–] 23332 18	Orga 8778→ 2000-11-19→ →Orga 9078 →2001-09-15	Ben		2097401	[o] 20974 11	
Bos		2395401	[–] 23954 19	Orga 9079→ 2001-09-16→	Ben		82029500		
Bos		2198804	[+] 21988 18	→Orga 8777 →2000-11-18		PRO	92055003	ø 247 x 8 x 25.3	
Bos		82054200					TPM0012		
Bos		82063700		→Orga 9078 →2001-09-15					
Bos		82063800							
Bos		82510100							
	PRO	92048103	ø 266 x 20.5 x 27.4	→Orga 9078 →2001-09-15					
	PRO	92111503	ø 266 x 22 x 34	Orga 9079→ 2001-09-16→					
		TPM0012							

206 Saloon 03/07→

525800
1.4 03/07→ 55 / 75

Bos		2359703	[–] 23597 18		Luc		91048000	ø 203.2 x 38	⊕ ABS
Bos		82054200			Bos		91053800	ø 180 x 32	⊖ ABS
Bos		82063800			Ben		97005800		⊖ ABS
Bos		82510100			Luc		83061800	bore ø 20.6 ø 203.2 x 38	⊕ ABS
	PRO	92092803	ø 247 x 13 x 34.2		Bos		84053800	bore ø 19 ø 180 x 32	⊖ ABS
	PRO	92043103	ø 247 x 20.4 x 34.2		Bos		84053801	bore ø 20.6 ø 180 x 32	⊕ ABS ⊕ integ. br.pow. regul.
		TPM0012			Luc		84061801	bore ø 20.6 ø 203.2 x 38	⊕ ABS
							94026600	ø 203,0 x 42	⊕ ABS Orga 10584→ 2005-10-30→
							94028200	ø 203 x 46.5	⊕ ABS →Orga 10254 →2004-12-04
							94014200	ø 179,9 x 46	⊖ ABS

525900
1.4 HDi eco 70 09/08→ 50 / 68

Bos		2359703	[–] 23597 18		Bos		91053800	ø 180 x 32	⊖ ABS
	PRO	92092803	ø 247 x 13 x 34.2		Luc		91061800	ø 203.2 x 38	⊕ ABS
	PRO	92043103	ø 247 x 20.4 x 34.2		Luc		83061800	bore ø 20.6 ø 203.2 x 38	⊕ ABS
		TPM0012			Bos		84053800	bore ø 19 ø 180 x 32	⊖ ABS
					Luc		84061801	bore ø 20.6 ø 203.2 x 38	⊕ ABS
							94026600	ø 203,0 x 42	
							94028200	ø 203 x 46.5	⊕ ABS
							94014200	ø 179,9 x 46	⊖ ABS

526000
1.6 16V 03/07→ 80 / 109

Bos		2333201	[–] 23332 18	Orga 8778→ 2000-11-19→ →Orga 9078 →2001-09-15	Ben		2097401	[o] 20974 11	
Bos		2339602	[–] 23396 18	→Orga 8777 →2000-11-18	Ben		82029500		
Bos		2395401	[–] 23954 19	Orga 9079→ 2001-09-16→	Luc		91061800	ø 203.2 x 38	
Bos		82063700			Luc		83061800	bore ø 20.6 ø 203.2 x 38	
	PRO	92048103	ø 266 x 20.5 x 27.4	→Orga 9078 →2001-09-15	Luc		84061801	bore ø 20.6 ø 203.2 x 38	
	PRO	92111503	ø 266 x 22 x 34	Orga 9079→ 2001-09-16→		PRO	92055003	ø 247 x 8 x 25.3	
		TPM0012					TPM0012		
							94028200	ø 203 x 46.5	

206 Schrägheck (2A/C) 08/98→11/09 → 206 Hatchback (2A/C), Page 837

206 Stufenheck 03/07→ → 206 Saloon, Page 841

206 SW (2E/K) 07/02→07/08

526100
1.1 07/02→ 44 / 60

Bos		2198004	[–] 21980 18	→Orga 8882 →2001-03-03	Ben		2097401	[o] 20974 11	⊕ rear disc brake

206 SW (2E/K) 07/02→07/08

		kW / hp											
1.1	07/02→	526100 44 / 60	Bos		2359703	[–] 23597 18		Luc		91048000	ø 203.2 x 38	→Orga 9456 →2002-09-28
			Bos		82054200			Luc		91061800	ø 203.2 x 38	Orga 9457→ 2002-09-29→
			Bos		82063800			Ben		97010400		→Orga 9456 →2002-09-28
			Bos		82510100			Luc		83061800	bore ø 20.6 ø 203.2 x 38	Orga 9457→ 2002-09-29→
				PRO	92092803	ø 247 x 13 x 34.2		Luc		84048006	bore ø 20.6 ø 203.2 x 38	⊕ ABS →Orga 9456 →2002-09-28
				PRO	92043103	ø 247 x 20.4 x 34.2		Luc		84061801	bore ø 20.6 ø 203.2 x 38	Orga 9457→ 2002-09-29→
					TPM0012				PRO	92055003	ø 247 x 8 x 25.3	⊕ rear disc brake
										TPM0012		
										94026600	ø 203,0 x 42	Orga 10255→ 2004-12-5→ →Orga 10955 →2006-11-05
										94028200	ø 203 x 46.5	→Orga 10254 →2004-12-04
1.4	07/02→	526200 55 / 75	Bos		2359703	[–] 23597 18		Ben		2097401	[o] 20974 11	⊕ rear disc brake
			Bos		82054200			Luc		91048000	ø 203.2 x 38	→Orga 9456 →2002-09-28
			Bos		82063800			Luc		91061800	ø 203.2 x 38	Orga 9457→ 2002-09-29→
			Bos		82510100			Ben		97010400		→Orga 9456 →2002-09-28
				PRO	92092803	ø 247 x 13 x 34.2		Luc		83061800	bore ø 20.6 ø 203.2 x 38	Orga 9457→ 2002-09-29→
				PRO	92043103	ø 247 x 20.4 x 34.2		Luc		84048006	bore ø 20.6 ø 203.2 x 38	⊕ ABS →Orga 9456 →2002-09-28
					TPM0012			Luc		84061801	bore ø 20.6 ø 203.2 x 38	Orga 9457→ 2002-09-29→
									PRO	92055003	ø 247 x 8 x 25.3	⊕ rear disc brake
										TPM0012		
										94028200	ø 203 x 46.5	
1.4 16V	10/03→	526300 65 / 88	Bos		2395401	[–] 23954 19		Ben		2097401	[o] 20974 11	⊕ rear disc brake
			Bos		82054200			Luc		91061800	ø 203.2 x 38	
			Bos		82063800				PRO	92055003	ø 247 x 8 x 25.3	⊕ rear disc brake
			Bos		82510100					TPM0012		
				PRO	92111503	ø 266 x 22 x 34				94028200	ø 203 x 46.5	
					TPM0012							
1.4 Flex	01/06→07/08	526400 59 / 80	Bos		2359703	[–] 23597 18		Luc		91061800	ø 203.2 x 38	
				PRO	92092803	ø 247 x 13 x 34.2				94026600	ø 203,0 x 42	
				PRO	92043103	ø 247 x 20.4 x 34.2						
					TPM0012							
1.4 HDi	07/02→	526500 50 / 68	Bos		2359703	[–] 23597 18		Ben		2097401	[o] 20974 11	⊕ rear disc brake
			Bos		82054200			Luc		91048000	ø 203.2 x 38	→Orga 9456 →2002-09-28
			Bos		82063800			Luc		91061800	ø 203.2 x 38	Orga 9457→ 2002-09-29→
			Bos		82510100			Ben		97010400		→Orga 9456 →2002-09-28
				PRO	92092803	ø 247 x 13 x 34.2		Luc		83061800	bore ø 20.6 ø 203.2 x 38	Orga 9457→ 2002-09-29→
				PRO	92043103	ø 247 x 20.4 x 34.2		Luc		84048006	bore ø 20.6 ø 203.2 x 38	⊕ ABS →Orga 9456 →2002-09-28
					TPM0012			Luc		84061801	bore ø 20.6 ø 203.2 x 38	Orga 9457→ 2002-09-29→
									PRO	92055003	ø 247 x 8 x 25.3	⊕ rear disc brake
										TPM0012		
										94026600	ø 203,0 x 42	Orga 10255→ 2004-12-05→ →Orga 10955 →2006-11-05

N - P

		kW / hp											
206 SW (2E/K) 07/02→07/08													
		526500									**94028200**	ø 203 x 46.5	→Orga 10254 →2004-12-04
1.4 HDi	07/02→	50 / 68											
		526600	Bos		**2359703**	[–] 23597 18		Luc		**91048000**	ø 203.2 x 38	→Orga 09456
1.4 LPG	07/02→	55 / 75		PRO	**92092803**	ø 247 x 13 x 34.2		Luc		**91061800**	ø 203.2 x 38	Orga 09457→
				PRO	**92043103**	ø 247 x 20.4 x 34.2				**94026600**	ø 203,0 x 42	Orga 10255→ →Orga 10955
					TPM0012					**94028200**	ø 203 x 46.5	→Orga 10254
		526700	Bos		**2395401**	[–] 23954 19		Bos		**91053800**	ø 180 x 32	⊖ ABS
1.6	05/05→07/08	81 / 110		PRO	**92111503**	ø 266 x 22 x 34		Luc		**91061800**	ø 203.2 x 38	Orga 1170588→ ⊕ ABS
1.6 Flex	05/05→07/08	83 / 113			**TPM0012**					**94026600**	ø 203,0 x 42	Orga 1170588→ ⊕ ABS
										94028200	ø 203 x 46.5	Orga 12288YQ→ ⊕ ABS
										94014200	ø 179,9 x 46	⊖ ABS
		526800	Luc		**2334602**	[–] 23346 19.3	Orga 10809→ 2006-06-12→	Ben		**2097401**	[o] 20974 11	
1.6 16V	07/02→	80 / 109	Bos		**2395401**	[–] 23954 19	→Orga 10808 →2006-06-11	Ben		**82029500**		
1.6 LPG	07/02→	80 / 109	Bos		**82063700**			Luc		**91048000**	ø 203.2 x 38	→Orga 9456 →2002-09-28
				PRO	**92111503**	ø 266 x 22 x 34		Luc		**91061800**	ø 203.2 x 38	Orga 9457→ 2002-09-29→
					TPM0012			Ben		**97010400**		→Orga 9456 →2002-09-28
								Luc		**83061800**	bore ø 20.6 ø 203.2 x 38	Orga 9457→ 2002-09-29→
								Luc		**84061801**	bore ø 20.6 ø 203.2 x 38	Orga 9457→ 2002-09-29→
									PRO	**92055003**	ø 247 x 8 x 25.3	
										TPM0012		
										94028200	ø 203 x 46.5	→Orga 9456 →2002-09-28
		526900	Luc		**2334602**	[–] 23346 19.3	Orga 1080978→	Ben		**2097401**	[o] 20974 11	⊕ rear disc brake
1.6 Flex	05/05→07/08	81 / 110	Bos		**2395401**	[–] 23954 19	→Orga 1080878	Luc		**91061800**	ø 203.2 x 38	⊕ rear drum brake
				PRO	**92111503**	ø 266 x 22 x 34			PRO	**92055003**	ø 247 x 8 x 25.3	⊕ rear disc brake
					TPM0012					**TPM0012**		
		527000	Bos		**2395401**	[–] 23954 19	Orga 9079→ 2001-09-16→	Ben		**2097401**	[o] 20974 11	
1.6 HDi 110	05/04→	80 / 109	Bos		**82063700**			Ben		**82029500**		
				PRO	**92111503**	ø 266 x 22 x 34	Orga 9079→ 2001-09-16→	Luc		**91061800**	ø 203.2 x 38	Orga 9457→ 2002-09-29→
					TPM0012			Ben		**97010400**		→Orga 9456 →2002-09-28
								Luc		**83061800**	bore ø 20.6 ø 203.2 x 38	Orga 9457→ 2002-09-29→
								Luc		**84061801**	bore ø 20.6 ø 203.2 x 38	Orga 9457→ 2002-09-29→
									PRO	**92055003**	ø 247 x 8 x 25.3	
										TPM0012		
		527100	Bos		**2395401**	[–] 23954 19		Ben		**2097401**	[o] 20974 11	
2.0 16V	07/02→	100 / 136	Bos		**82054200**			Ben		**82029500**		
			Bos		**82063700**		→Orga 9078 →2001-09-15	Luc		**91048000**	ø 203.2 x 38	→Orga 9456 →2002-09-28
			Bos		**82063800**			Luc		**91061800**	ø 203.2 x 38	Orga 9457→ 2002-09-29→
			Bos		**82510100**			Ben		**97010400**		→Orga 9456 →2002-09-28
				PRO	**92111503**	ø 266 x 22 x 34		Luc		**83061800**	bore ø 20.6 ø 203.2 x 38	Orga 9457→ 2002-09-29→
					TPM0012			Luc		**84061801**	bore ø 20.6 ø 203.2 x 38	Orga 9457→ 2002-09-29→
									PRO	**92055003**	ø 247 x 8 x 25.3	

N - P

		kW / hp											
206 SW (2E/K) 07/02→07/08													
2.0 16V	07/02→	527100 100 / 136								TPM0012		
										94028200	ø 203 x 46.5	→Orga 9456 →2002-09-28
2.0 HDi	07/02→	527200 66 / 90	Luc	2334602	[–] 23346 19.3	Orga 10892→ 2006-09-03→	Ben	2097401	[o] 20974 11			
			Bos	2395401	[–] 23954 19	Orga 9079→ 2001-09-16→ →Orga 10891 →2006-09-02	Ben	82029500				
			Bos	82054200			Luc	91048000	ø 203.2 x 38	→Orga 9456 →2002-09-28		
			Bos	82063700		→Orga 9078 →2001-09-15	Luc	91061800	ø 203.2 x 38	Orga 9457→ 2002-09-29→		
			Bos	82063800			Ben	97010400		→Orga 9456 →2002-09-28		
			Bos	82510100			Luc	83061800	bore ø 20.6 ø 203.2 x 38	Orga 9457→ 2002-09-29→		
				92111503	ø 266 x 22 x 34	Orga 9079→ 2001-09-16→	Luc	84048006	bore ø 20.6 ø 203.2 x 38	⊕ ABS →Orga 9456 →2002-09-28		
				TPM0012			Luc	84061801	bore ø 20.6 ø 203.2 x 38	Orga 9457→ 2002-09-29→		
								92055003	ø 247 x 8 x 25.3			
								94028200	ø 203 x 46.5	→Orga 10955 →2006-11-05		
206 Van 04/99→03/09													
1.4 HDi	09/01→03/09	527300 50 / 68	Bos	2359703	[–] 23597 18		Ben	2097401	[o] 20974 11	⊕ rear disc brake		
			Bos	82054200			Luc	91048000	ø 203.2 x 38	⊕ ABS →Orga 9456 →2002-09-28		
			Bos	82063800			Bos	91053800	ø 180 x 32	⊖ ABS		
			Bos	82510100			Luc	91061800	ø 203.2 x 38	⊕ ABS Orga 9457→ 2002-09-29→		
				92092803	ø 247 x 13 x 34.2		Ben	97005800		⊖ ABS		
				92043103	ø 247 x 20.4 x 34.2		Ben	97010400		⊕ ABS →Orga 9456 →2002-09-28		
				TPM0012			Luc	83061800	bore ø 20.6 ø 203.2 x 38	⊕ ABS Orga 9457→ 2002-09-29→		
							Luc	84048006	bore ø 20.6 ø 203.2 x 38	⊕ ABS →Orga 9456 →2002-09-28		
							Bos	84053800	bore ø 19 ø 180 x 32	⊖ ABS		
							Bos	84053801	bore ø 20.6 ø 180 x 32	⊖ ABS ⊕ integ. br.pow. regul.		
							Luc	84061801	bore ø 20.6 ø 203.2 x 38	⊕ ABS Orga 9457→ 2002-09-29→		
								92055003	ø 247 x 8 x 25.3	⊕ rear disc brake		
								94028200	ø 203 x 46.5	⊕ ABS		
								94014200	ø 179,9 x 46	⊖ ABS		
1.9 D	04/99→05/07	527400 51 / 69	Bos	2359703	[–] 23597 18		Ben	2097401	[o] 20974 11	⊕ rear disc brake		
			Bos	82054200			Luc	91048000	ø 203.2 x 38	⊕ ABS		
			Bos	82063800			Bos	91053800	ø 180 x 32	⊖ ABS		
			Bos	82510100			Ben	97005800		⊖ ABS		
				92043103	ø 247 x 20.4 x 34.2		Ben	97010400		⊕ ABS		
				TPM0012			Luc	84048006	bore ø 20.6 ø 203.2 x 38	⊕ ABS Orga 9457→ 2002-09-29→		
							Bos	84053800	bore ø 19 ø 180 x 32	⊖ ABS		
							Bos	84053802	bore ø 19 ø 180 x 32	⊖ ABS ⊕ integ. br.pow. regul.		
								92055003	ø 247 x 8 x 25.3	⊕ rear disc brake		
								94028200	ø 203 x 46.5	⊕ ABS		
								94014200	ø 179,9 x 46	⊖ ABS		
206+ (T3E) 01/09→													
1.1	01/09→	527500 44 / 60	Bos	2359703	[–] 23597 18		Bos	91053800	ø 180 x 32	⊖ ABS		
1.4 HDi eco 70	01/09→	50 / 68										
1.4 i	01/09→	55 / 75										

N - P

		kW / hp											
206+ (T3E) 01/09→													
1.4 i	09/10→	54 / 73		PRO	92092803	ø 247 x 13 x 34.2	⊖ D	Luc		91061800	ø 203.2 x 38	⊕ ABS →Orga 12287 →2010-06-29
				PRO	92043103	ø 247 x 20.4 x 34.2	⊕ D	Luc		83061800	bore ø 20.6 ø 203.2 x 38	⊕ ABS →Orga 12287 →2010-06-29
					TPM0012			Bos		84053800	bore ø 19 ø 180 x 32	⊖ ABS
								Bos		84053801	bore ø 20.6 ø 180 x 32	⊖ ABS
								Luc		84061801	bore ø 20.6 ø 203.2 x 38	⊕ ABS →Orga 12287 →2010-06-29
										94026600	ø 203,0 x 42	⊕ ABS Orga 117088→ 1980-01-21→
										94028200	ø 203 x 46.5	Orga 12288YQ→ 2010-06-30→ ⊕ ABS
										94014200	ø 179,9 x 46	
207 (WA_, WC_) 02/06→													
		527600	Bos		2395401	[–] 23954 19				91067200	ø 228 x 42	
1.4	02/06→	53 / 72										
1.4 16V	02/06→	65 / 88										
1.4 HDi	02/06→	50 / 68	Bos		82054200			Bos		97010100		
			Bos		82510100			Bos		84067201	bore ø 20.6 ø 228 x 42	
				PRO	92111503	ø 266 x 22 x 34						
					TPM0012							
		527700	Bos		2395401	[–] 23954 19				91067200	ø 228 x 42	
1.4	12/07→	54 / 73		PRO	92111503	ø 266 x 22 x 34		Bos		97010100		
					TPM0012					84067200	bore ø 20.6 ø 228 x 42	
		527800	Bos		2395401	[–] 23954 19				91067200	ø 228 x 42	
1.4	08/08→	55 / 75										
1.4 Bioflex	08/08→	60 / 82	Bos		82054200			Bos		97010100		
			Bos		82510100							
				PRO	92111503	ø 266 x 22 x 34						
					TPM0012							
		527900	Bos		2360001	[–] 23600 19				91067200	ø 228 x 42	
1.4 16V	06/07→	70 / 95	Bos		82054200			Bos		97010100		
			Bos		82510100							
				PRO	92111603	ø 283 x 26 x 34						
					TPM0012							
		528000	Bos		2360001	[–] 23600 19				91067200	ø 228 x 42	
1.4 16V	10/09→	72 / 98		PRO	92111603	ø 283 x 26 x 34		Bos		97010100		
		528100	Bos		2360001	[–] 23600 19		Luc		2355402	[–] 23554 17.2	
1.6	09/07→12/08	90 / 122										
1.6 Flex	08/08→	83 / 113		PRO	92111603	ø 283 x 26 x 34		Luc		2355481	[–] 23554 17.2	
					TPM0012				ABS	92202100	ø 249 x 9 x 69.2	
		528200	Bos		2360001	[–] 23600 19		Luc		2355402	[–] 23554 17.2	09/08→
1.6	08/08→	81 / 110		PRO	92111603	ø 283 x 26 x 34		Luc		2355481	[–] 23554 17.2	09/08→
					TPM0012			Bos		2473701	[–] 24737 18	→09/08
									ABS	92202100	ø 249 x 9 x 69.2	
		528300	Bos		2360001	[–] 23600 19		Luc		2355402	[–] 23554 17.2	Orga 11628→ 2008-09-08→ Orga 11635→ 2008-09-15→
1.6 16V	02/06→	80 / 109	Bos		82054200			Luc		2355481	[–] 23554 17.2	Orga 11628→ 2008-09-08→ Orga 11635→ 2008-09-15→
			Bos		82510100			Bos		2473701	[–] 24737 18	→Orga 11627 →2008-09-07 →Orga 11634 →2008-09-14
				PRO	92111603	ø 283 x 26 x 34		Bos		82054300		→Orga 11627 81 →2008-09-07 →Orga 11634 82 →2008-09-14

N - P

		kW / hp										
207 (WA_, WC_) 02/06→												
1.6 16V	02/06→	528300 80 / 109		TPM0012				ABS	92202100	ø 249 x 9 x 69.2	
1.6 16V	08/08→	528400 79 / 106	Bos	2360001	[–] 23600 19		Luc		2355402	[–] 23554 17.2	1163582→ 1162881→
1.6 16V VTi	09/08→	81 / 110		PRO 92111603	ø 283 x 26 x 34		Luc	epad	2355481	[–] 23554 17.2	1163582→ 1162881→
1.9 D	10/08→	51 / 69		TPM0012			Bos		2473701	[–] 24737 18	→1163482 →1162781
2.0 HDi	10/08→	66 / 90						ABS	92202100	ø 249 x 9 x 69.2	
1.6 16V RC	02/07→	528500 128 / 174	Ate	2358901	[–] 23589 19		Luc		2355402	[–] 23554 17.2	Orga 11628→ 2008-09-08→
			Ate	82076800			Luc	epad	2355481	[–] 23554 17.2	Orga 11628→ 2008-09-08→
				PRO 92133203	ø 302 x 26 x 34.1		Bos		2473701	[–] 24737 18	→Orga 11627 →2008-09-07
				TPM0012			Bos		82054300		→Orga 11634 82 →2008-09-14 →Orga 11627 81 →2008-09-07
								ABS	92202100	ø 249 x 9 x 69.2	
1.6 16V Turbo	02/06→	528600 110 / 150	Bos	2360001	[–] 23600 19		Luc		2355402	[–] 23554 17.2	Orga 11635→ 2008-09-15→ Orga 11628→ 2008-09-08→
			Bos	82054200			Luc	epad	2355481	[–] 23554 17.2	Orga 11635→ 2008-09-15→ Orga 11628→ 2008-09-08→
			Bos	82510100			Bos		2473701	[–] 24737 18	→Orga 11627 →2008-09-07 →Orga 11634 →2008-09-14
				PRO 92111603	ø 283 x 26 x 34		Bos		82054300		→Orga 11627 81 →2008-09-07 →Orga 11634 82 →2008-09-14
				TPM0012				ABS	92202100	ø 249 x 9 x 69.2	
1.6 16V Turbo	10/09→	528700 115 / 156	Bos	2360001	[–] 23600 19		Luc		2355402	[–] 23554 17.2	
1.6 HDi 110	08/09→	82 / 112	Bos	82054200			Luc	epad	2355481	[–] 23554 17.2	
			Bos	82510100				ABS	92202100	ø 249 x 9 x 69.2	
				PRO 92111603	ø 283 x 26 x 34						
				TPM0012							
1.6 16V VTi	02/07→	528800 88 / 120	Bos	2360001	[–] 23600 19		Luc		2355402	[–] 23554 17.2	Orga 11628→ 2008-09-08→ Orga 11631→ 2008-09-12→ Orga 11642→ 2008-09-23→
			Bos	82054200			Luc	epad	2355481	[–] 23554 17.2	Orga 11628→ 2008-09-08→ Orga 11631→ 2008-09-12→ Orga 11642→ 2008-09-23→
			Bos	82510100			Bos		2473701	[–] 24737 18	→Orga 11627 →2008-09-07 →Orga 11630 →2008-09-11 →Orga 11641 →2008-09-22
				PRO 92111603	ø 283 x 26 x 34		Bos		82054300		→Orga 11627 81 →2008-09-07 →Orga 11634 82 →2008-09-14
				TPM0012				ABS	92202100	ø 249 x 9 x 69.2	
1.6 HDi	02/06→	528900 66 / 90	Bos	2360001	[–] 23600 19	Ø 283 mm	Luc		2355402	[–] 23554 17.2	Orga 11631→ 2008-09-11→ Orga 11628→ 2008-09-08→
			Bos	2395401	[–] 23954 19	Ø 266 mm	Luc	epad	2355481	[–] 23554 17.2	Orga 11631→ 2008-09-11→ Orga 11628→ 2008-09-08→
			Bos	82054200			Bos		2473701	[–] 24737 18	→Orga 11630 →2008-09-10 →Orga 11627 →2008-09-07
			Bos	82510100			Bos		82054300		→Orga 11630 76 →2008-09-10 →Orga 11627 81 →2008-09-07 →Orga 11634 82 →2008-09-14
				PRO 92111503	ø 266 x 22 x 34				91067200	ø 228 x 42	
				PRO 92111603	ø 283 x 26 x 34		Bos		97010100		
				TPM0012				ABS	92202100	ø 249 x 9 x 69.2	
1.6 HDi	02/06→	529000 80 / 109	Bos	2360001	[–] 23600 19		Luc		2355402	[–] 23554 17.2	Orga 11635→ 2008-09-15→ Orga 11628→ 2008-09-08→ Orga 11631→ 2008-09-11→
			Bos	82054200			Luc	epad	2355481	[–] 23554 17.2	Orga 11635→ 2008-09-15→ Orga 11628→ 2008-09-08→ Orga 11631→ 2008-09-11→
			Bos	82510100			Bos		2473701	[–] 24737 18	→Orga 11630 →2008-09-10 →Orga 11627 →2008-09-07 →Orga 11634 →2008-09-14
				PRO 92111603	ø 283 x 26 x 34		Bos		82054300		→Orga 11630 76 →2008-09-10 →Orga 11627 81 →2008-09-07 →Orga 11634 82 →2008-09-14
				TPM0012				ABS	92202100	ø 249 x 9 x 69.2	

		kW / hp										
207 (WA_, WC_) 02/06→												
		529100	Bos		**2360001**	[–] 23600 19	Ø 283 mm	Luc		**2355402**	[–] 23554 17.2	
1.6 HDi	11/09→	68 / 92	Bos		**2395401**	[–] 23954 19	Ø 266 mm	Luc		**2355481**	[–] 23554 17.2	
			Bos		**82054200**					**91067200**	ø 228 x 42	
			Bos		**82510100**			Bos		**97010100**		
				PRO	**92111503**	ø 266 x 22 x 34			ABS	**92202100**	ø 249 x 9 x 69.2	
				PRO	**92111603**	ø 283 x 26 x 34						
					TPM0012							
207 CC (WD_) 02/07→12/08												
		529200	Bos		**2360001**	[–] 23600 19		Luc		**2355402**	[–] 23554 17.2	
1.6	09/07→12/08	90 / 122		PRO	**92111603**	ø 283 x 26 x 34		Luc		**2355481**	[–] 23554 17.2	
					TPM0012				ABS	**92202100**	ø 249 x 9 x 69.2	
		529300	Bos		**2360001**	[–] 23600 19		Luc		**2355402**	[–] 23554 17.2	Orga 11628→ 2008-09-08→ Orga 11631→ 2008-09-12→ Orga 11642→ 2008-09-23→
1.6 16V	02/07→	88 / 120	Bos		**82054200**			Luc		**2355481**	[–] 23554 17.2	Orga 11628→ 2008-09-08→ Orga 11631→ 2008-09-12→ Orga 11642→ 2008-09-23→
			Bos		**82510100**			Bos		**2473701**	[–] 24737 18	→Orga 11627 →2008-09-07 →Orga 11630 →2008-09-11 →Orga 11641 →2008-09-22
				PRO	**92111603**	ø 283 x 26 x 34		Bos		**82054300**		→Orga 11627 81 →2008-09-07 →Orga 11634 82 →2008-09-14
					TPM0012				ABS	**92202100**	ø 249 x 9 x 69.2	
		529400	Bos		**2360001**	[–] 23600 19		Luc		**2355402**	[–] 23554 17.2	Orga 11635→ 2008-09-15→ Orga 11628→ 2008-09-08→
1.6 16V Turbo	02/07→	110 / 150	Bos		**82054200**			Luc		**2355481**	[–] 23554 17.2	Orga 11635→ 2008-09-15→ Orga 11628→ 2008-09-08→
			Bos		**82510100**			Bos		**2473701**	[–] 24737 18	→Orga 11627 →2008-09-07 →Orga 11634 →2008-09-14
				PRO	**92111603**	ø 283 x 26 x 34		Bos		**82054300**		→Orga 11627 81 →2008-09-07 →Orga 11634 82 →2008-09-14
					TPM0012				ABS	**92202100**	ø 249 x 9 x 69.2	
		529500	Bos		**2360001**	[–] 23600 19		Luc		**2355402**	[–] 23554 17.2	
1.6 16V Turbo	10/09→	115 / 156	Bos		**82054200**			Luc		**2355481**	[–] 23554 17.2	
1.6 HDi	08/09→	82 / 112	Bos		**82510100**				ABS	**92202100**	ø 249 x 9 x 69.2	
				PRO	**92111603**	ø 283 x 26 x 34						
					TPM0012							
		529600	Bos		**2360001**	[–] 23600 19		Luc		**2355402**	[–] 23554 17.2	Orga 11635→ 2008-09-15→ Orga 11628→ 2008-09-08→ Orga 11631→ 2008-09-11→
1.6 HDi	02/07→	80 / 109	Bos		**82054200**			Luc		**2355481**	[–] 23554 17.2	Orga 11635→ 2008-09-15→ Orga 11628→ 2008-09-08→ Orga 11631→ 2008-09-11→
			Bos		**82510100**			Bos		**2473701**	[–] 24737 18	→Orga 11630 →2008-09-10 →Orga 11627 →2008-09-07 →Orga 11634 →2008-09-14
				PRO	**92111603**	ø 283 x 26 x 34		Bos		**82054300**		→Orga 11630 76 →2008-09-10 →Orga 11627 81 →2008-09-07 →Orga 11634 82 →2008-09-14
					TPM0012				ABS	**92202100**	ø 249 x 9 x 69.2	
207 PASSION Stufenheck 12/07→ → 207 Saloon, Page 847												
207 PASSION três volumes 12/07→ → 207 Saloon, Page 847												
207 Saloon 12/07→												
		529700	Bos		**2395401**	[–] 23954 19				**91067200**	ø 228 x 42	
1.4	12/07→	54 / 73	Bos		**82054200**			Bos		**97010100**		
1.4 Flex	11/08→	60 / 82	Bos		**82510100**							
				PRO	**92111503**	ø 266 x 22 x 34						
					TPM0012							

		kW / hp											
207 Saloon 12/07→													
529800			Bos		2395401	[–] 23954 19				91067200	ø 228 x 42	
1.4	01/11→	55 / 75		PRO	92111503	ø 266 x 22 x 34			Bos	97010100		
					TPM0012							
529900			Bos		2360001	[–] 23600 19			Luc	2355402	[–] 23554 17.2	Orga 11628 81→ 2008-09-08→
1.6 Bioflex	01/08→	83 / 113										Orga 11631 76→ 2008-09-11→
			Bos		82054200							Orga 11635 82→ 2008-09-15→
									Luc	2355481	[–] 23554 17.2	Orga 11628 81→ 2008-09-08→
				PRO	92111603	ø 283 x 26 x 34						Orga 11631 76→ 2008-09-11→
												Orga 11635 82→ 2008-09-15→
					TPM0012				Bos	2473701	[–] 24737 18	→Orga 11630 76 →2008-09-10
												→Orga 11627 81 →2008-09-07
												→Orga 11634 82 →2008-09-14
									Bos	82054300		→Orga 11630 76 →2008-09-10
												→Orga 11627 81 →2008-09-07
												→Orga 11634 82 →2008-09-14
										92133300	ø 249 x 9 x 67.2	
530000			Bos		2360001	[–] 23600 19			Luc	2355402	[–] 23554 17.2	1163582→ 1162881→
1.9 XSD	12/07→	51 / 69										
2.0 HDi	12/07→	66 / 90		PRO	92111603	ø 283 x 26 x 34			Luc	2355481	[–] 23554 17.2	1163582→ 1162881→
					TPM0012				Bos	2473701	[–] 24737 18	→1163482 →1162781
										92202100	ø 249 x 9 x 69.2	
207 Stufenheck 12/07→ → 207 Saloon, Page 847												
207 SW (WK_) 02/07→												
530100			Bos		2395401	[–] 23954 19				91067200	ø 228 x 42	
1.4	06/07→	54 / 74							Bos	97010100		
1.4 Flex	08/08→	59 / 80	Bos		82054200							
			Bos		82510100				Bos	84067201	bore ø 20.6	
											ø 228 x 42	
				PRO	92111503	ø 266 x 22 x 34						
					TPM0012							
530200			Bos		2360001	[–] 23600 19				91067200	ø 228 x 42	
1.4 16V	06/07→	70 / 95	Bos		82054200				Bos	97010100		
			Bos		82510100				Bos	84067201	bore ø 20.6	
											ø 228 x 42	
				PRO	92111603	ø 283 x 26 x 34						
					TPM0012							
530300			Bos		2360001	[–] 23600 19				91067200	ø 228 x 42	⊖ ABS
1.4 16V	11/09→	72 / 98		PRO	92111603	ø 283 x 26 x 34			Bos	97010100		
					TPM0012					84067200	bore ø 20.6	⊖ ABS
											ø 228 x 42	
530400			Bos		2360001	[–] 23600 19			Luc	2355402	[–] 23554 17.2	09/08→
1.6	08/08→	81 / 110		PRO	92111603	ø 283 x 26 x 34			Luc	2355481	[–] 23554 17.2	09/08→
					TPM0012				Bos	2473701	[–] 24737 18	→09/08
530500			Bos		2360001	[–] 23600 19			Luc	2355402	[–] 23554 17.2	1163582→ 1162881→
1.6	01/10→	78 / 106										
2.0 HDi	10/08→	66 / 90		PRO	92111603	ø 283 x 26 x 34			Luc	2355481	[–] 23554 17.2	1163582→ 1162881→
					TPM0012				Bos	2473701	[–] 24737 18	→1163482 →1162781
										92202100	ø 249 x 9 x 69.2	
530600			Bos		2360001	[–] 23600 19			Luc	2355402	[–] 23554 17.2	Orga 11628→ 2008-09-08→
1.6 16V	06/07→	88 / 120										Orga 11631→ 2008-09-12→
												Orga 11642→ 2008-09-23→
			Bos		82054200				Luc	2355481	[–] 23554 17.2	Orga 11628→ 2008-09-08→
												Orga 11631→ 2008-09-12→
			Bos		82510100							Orga 11642→ 2008-09-23→
				PRO	92111603	ø 283 x 26 x 34			Bos	2473701	[–] 24737 18	→Orga 11627 →2008-09-07
												→Orga 11630 →2008-09-11
												→Orga 11641 →2008-09-22
					TPM0012				Bos	82054300		→Orga 11627 81 →2008-09-07
												→Orga 11634 82 →2008-09-14

N - P

		kW / hp											
207 SW (WK_) 02/07→													
1.6 16V	06/07→	530600 88 / 120								92202100	ø 249 x 9 x 69.2	
1.6 16V RC	02/07→	530700 128 / 174	Ate		2358901	[–] 23589 19		Luc		2355402	[–] 23554 17.2	Orga 11628→ 2008-09-08→
			Ate		82076800			Luc		2355481	[–] 23554 17.2	Orga 11628→ 2008-09-08→
				PRO	92133203	ø 302 x 26 x 34.1		Bos		2473701	[–] 24737 18	→Orga 11627 →2008-09-07
					TPM0012			Bos		82054300		→Orga 11634 82 →2008-09-14 →Orga 11627 81 →2008-09-07
										92202100	ø 249 x 9 x 69.2	
1.6 Flex	08/08→	530800 83 / 113	Bos		2360001	[–] 23600 19		Luc		2355402	[–] 23554 17.2	
				PRO	92111603	ø 283 x 26 x 34		Luc		2355481	[–] 23554 17.2	
					TPM0012					92202100	ø 249 x 9 x 69.2	
1.6 HDi	06/07→	530900 66 / 90	Bos		2360001	[–] 23600 19		Luc		2355402	[–] 23554 17.2	Orga 11635→ 2008-09-15→ Orga 11628→ 2008-09-08→
			Bos		82054200			Luc		2355481	[–] 23554 17.2	Orga 11635→ 2008-09-15→ Orga 11628→ 2008-09-08→
			Bos		82510100			Bos		2473701	[–] 24737 18	→Orga 11627 →2008-09-07 →Orga 11634 →2008-09-14
				PRO	92111603	ø 283 x 26 x 34		Bos		82054300		→Orga 11627 81 →2008-09-07 →Orga 11634 82 →2008-09-14
					TPM0012					91067200	ø 228 x 42	
								Bos		97010100		
								Bos		84067201	bore ø 20.6 ø 228 x 42	
										92202100	ø 249 x 9 x 69.2	
1.6 HDi	06/07→	531000 80 / 109	Bos		2360001	[–] 23600 19		Luc		2355402	[–] 23554 17.2	Orga 11635→ 2008-09-15→ Orga 11628→ 2008-09-08→ Orga 11631→ 2008-09-11→
			Bos		82054200			Luc		2355481	[–] 23554 17.2	Orga 11635→ 2008-09-15→ Orga 11628→ 2008-09-08→ Orga 11631→ 2008-09-11→
			Bos		82510100			Bos		2473701	[–] 24737 18	→Orga 11630 →2008-09-10 →Orga 11627 →2008-09-07 →Orga 11634 →2008-09-14
				PRO	92111603	ø 283 x 26 x 34						
					TPM0012			Bos		82054300		→Orga 11630 76 →2008-09-10 →Orga 11627 81 →2008-09-07 →Orga 11634 82 →2008-09-14
										92202100	ø 249 x 9 x 69.2	
1.6 HDi	08/09→	531100 82 / 112	Bos		2360001	[–] 23600 19		Luc		2355402	[–] 23554 17.2	
			Bos		82054200			Luc		2355481	[–] 23554 17.2	
			Bos		82510100					92202100	ø 249 x 9 x 69.2	
				PRO	92111603	ø 283 x 26 x 34						
					TPM0012							
1.6 HDi	11/09→	531200 68 / 92	Bos		2360001	[–] 23600 19	Ø 283 mm	Luc		2355402	[–] 23554 17.2	
			Bos		2395401	[–] 23954 19	Ø 266 mm	Luc		2355481	[–] 23554 17.2	
			Bos		82054200					91067200	ø 228 x 42	
			Bos		82510100			Bos		97010100		
				PRO	92111503	ø 266 x 22 x 34		Bos		84067201	bore ø 20.6 ø 228 x 42	
				PRO	92111603	ø 283 x 26 x 34				92133300	ø 249 x 9 x 67.2	
					TPM0012							
207 SW Estate (WK_) 02/07→ → 207 SW (WK_), Page 848												
207 SW Kombi (WK_) 02/07→ → 207 SW (WK_), Page 848												
207 Van 04/07→10/08												
1.4	06/07→10/08	531300 54 / 74	Bos		2395401	[–] 23954 19				91067200	ø 228 x 42	
				PRO	92111503	ø 266 x 22 x 34				84067200	bore ø 20.6 ø 228 x 42	⊕ ABS

N - P

		kW / hp											
207 Van 04/07→10/08													
1.4	06/07→10/08	531300 54 / 74			TPM0012								
1.4	07/07→10/08	531400 55 / 75	Bos		2395401	[–] 23954 19				91067200	ø 228 x 42	
1.4 HDi	04/07→	50 / 68	Bos		82054200			Bos		97010100		
			Bos		82510100							
				PRO	92111503	ø 266 x 22 x 34						
					TPM0012							
1.6 HDi	04/07→	531500 66 / 90	Bos		2360001	[–] 23600 19	Ø 283 mm	Luc		2355402	[–] 23554 17.2	Orga 11631→ 2008-09-11→ Orga 11628→ 2008-09-08→
			Bos		2395401	[–] 23954 19	Ø 266 mm	Luc		2355481	[–] 23554 17.2	Orga 11631→ 2008-09-11→ Orga 11628→ 2008-09-08→
			Bos		82054200			Bos		2473701	[–] 24737 18	→Orga 11630 →2008-09-10 →Orga 11627 →2008-09-07
			Bos		82510100			Bos		82054300		→Orga 11630 76 →2008-09-10 →Orga 11627 81 →2008-09-07 →Orga 11634 82 →2008-09-14
				PRO	92111503	ø 266 x 22 x 34				91067200	ø 228 x 42	
				PRO	92111603	ø 283 x 26 x 34		Bos		97010100		
					TPM0012				ABS	92202100	ø 249 x 9 x 69.2	
208 03/12→													
1.0	03/12→	531600 50 / 68	Bos		2395401	[–] 23954 19				91077200	ø 203.2 x 39	
1.2	03/12→	60 / 82										
1.4 HDi	03/12→	50 / 68	Bos		82054200							
				PRO	92111503	ø 266 x 22 x 34						
1.2 THP	01/13→	531700 81 / 110	Ate		2358901	[–] 23589 19	Ø 302 mm	Luc		2355402	[–] 23554 17.2	⊕ rear disc brake
1.6 HDi	01/13→	55 / 75	Bos		2395401	[–] 23954 19	Ø 266 mm	Luc		2355481	[–] 23554 17.2	⊕ rear disc brake
			Ate		82032000		Ø 302 mm			91077200	ø 203.2 x 39	⊕ rear drum brake
					92168500	ø 302 x 26 x 34.2		Bos		97031200		⊕ rear drum brake
				PRO	92111503	ø 266 x 22 x 34			ABS	92202100	ø 249 x 9 x 69.2	⊕ rear disc brake
				PRO	92168503	ø 302 x 26 x 34.2						
					TPM0012							
1.4	03/12→	531800 70 / 95	Bos		2395401	[–] 23954 19		Luc		2355402	[–] 23554 17.2	
1.6	03/12→	88 / 120										
1.6 HDi	03/12→	68 / 92	Bos		82054200			Luc		2355481	[–] 23554 17.2	
1.6 HDi	03/12→	84 / 114										
				PRO	92111503	ø 266 x 22 x 34			ABS	92202100	ø 249 x 9 x 69.2	
1.4	01/13→	531900 66 / 90	Ate		2358901	[–] 23589 19	Ø 302 mm	Luc		2355402	[–] 23554 17.2	⊕ rear disc brake
1.4 Flex	01/13→	68 / 93										
1.6	01/13→	85 / 115	Bos		2395401	[–] 23954 19	Ø 266 mm	Luc		2355481	[–] 23554 17.2	⊕ rear disc brake
1.6 Flex	01/13→	90 / 122										
			Bre		2357501	[+] 23575 16	Ø 302 mm			91077200	ø 203.2 x 39	⊕ rear drum brake
			Ate		82032000			Bos		97031200		⊕ rear drum brake
					92168500	ø 302 x 26 x 34.2			ABS	92202100	ø 249 x 9 x 69.2	⊕ rear disc brake
				PRO	92111503	ø 266 x 22 x 34						
				PRO	92168503	ø 302 x 26 x 34.2						
					TPM0012							
1.6	03/12→	532000 115 / 156	Ate		2358901	[–] 23589 19		Luc		2355402	[–] 23554 17.2	
			Ate		82032000			Luc		2355481	[–] 23554 17.2	
					92168500	ø 302 x 26 x 34.2			ABS	92202100	ø 249 x 9 x 69.2	
				PRO	92168503	ø 302 x 26 x 34.2						
1.6 GTi	08/12→	532100 147 / 200	Bos		2395401	[–] 23954 19	Ø 266 mm	Luc		2355402	[–] 23554 17.2	

N - P

		kW / hp										
208 03/12→												
		532100	Ate		**82032000**		Ø 302 mm	Luc		**2355481**	[–] 23554 17.2	
1.6 GTi	08/12→	147 / 200			**92168500**	ø 302 x 26 x 34.2				**92202100**	ø 249 x 9 x 69.2	
				PRO	**92111503**	ø 266 x 22 x 34						
				PRO	**92168503**	ø 302 x 26 x 34.2						
					TPM0012							
301 11/12→												
		532200	Bos		**2395401**	[–] 23954 19	Bosch			**91077200**	ø 203.2 x 39	⊕ ABS
1.2 VTi 72	11/12→	53 / 72										
1.6 HDI 90	11/12→	68 / 92										
1.6 VTi 115	11/12→	85 / 115	Man		**2525001**	[–] 25250 18.7	Mando	Bos		**97031200**		
				PRO	**92111503**	ø 266 x 22 x 34	Bosch					
					TPM0012							
306 (7B, N3, N5) 06/94→10/04												
		532300	Bos		**2198004**	[–] 21980 18	Bosch ⊖ ABS 32000001→	Luc		**91031200**	ø 180 x 32	→09/95
1.1	06/94→05/01	44 / 60	Ben		**2090602**	[o] 20906 18	Bendix ⊖ ABS →32000000	Ben		**91045200**	ø 180 x 32	
			Ate		**2143001**	[+] 21430 17.3	Teves ⊕ ABS	Luc		**91048000**	ø 203.2 x 38	⊕ ABS 09/95→
			Ben		**2090604**	[+] 20906 18	Bendix ⊖ ABS →32000000	Bos		**91056600**	ø 228.6 x 42	⊕ reinf. susp.
			Ben		**82032200**		→32000000 ⊖ ABS	Ben		**97004700**		Bendix
			Ate		**82030600**		Teves ⊕ ABS	Luc		**97007600**		Lucas
			Ate		**82062900**		⊕ ABS	Ben		**97010000**		Bendix ⊕ reinf. susp.
				PRO	**92029803**	ø 247 x 10 x 34	Bosch ⊖ ABS	Ben		**97010400**		⊕ ABS 09/95→
				PRO	**92043103**	ø 247 x 20.4 x 34.2	Teves ⊕ ABS	Luc		**84031202**	bore ø 20.6 ø 180 x 32	→09/95
					TPM0012			Luc		**84048006**	bore ø 20.6 ø 203.2 x 38	09/95→ ⊕ ABS
								Bos		**84056600**	bore ø 20.6 ø 228.6 x 42	⊕ ABS ⊕ reinf. susp.
								Bos		**84056602**	bore ø 20.6 ø 228.6 x 42	⊖ ABS ⊕ reinf. susp.
										94010300	ø 229,0 x 50.5	Bendix ⊕ reinf. susp.
										94014300	ø 180,0 x 44.5	→09/95
										94024900	ø 202 x 46.5	⊕ ABS 09/95→
		532400	Bos		**2198004**	[–] 21980 18	Bosch ⊖ ABS 32000001→	Luc		**91031200**	ø 180 x 32	Lucas
1.4 SL	06/94→05/01	55 / 75	Bos		**2339602**	[–] 23396 18	Bosch ⊕ ABS Orga 8576→ 2000-05-01→	Ben		**91038100**	ø 228.6 x 42	Bendix ⊕ reinf. susp.
			Ate		**2182702**	[–] 21827 17.3	Teves ⊕ ABS	Ben		**91045200**	ø 180 x 32	Bendix
			Ben		**2090602**	[o] 20906 18	Bendix ⊖ ABS →32000000	Luc		**91048000**	ø 203.2 x 38	⊕ ABS 09/95→
			Ate		**2143001**	[+] 21430 17.3	Teves ⊕ ABS	Ben		**97004700**		Bendix
			Gir		**2312401**	[+] 23124 19.3	Lucas ⊕ ABS Orga 8576→ 2000-05-01→	Luc		**97007600**		Lucas
			Ben		**2090604**	[+] 20906 18	Bendix ⊖ ABS →32000000	Ben		**97010000**		Bendix ⊕ reinf. susp.
			Ben		**82032200**		→32000000 ⊖ ABS	Ben		**97010400**		⊕ ABS 09/95→
			Ate		**82030600**		Teves ⊕ ABS	Luc		**84031202**	bore ø 20.6 ø 180 x 32	Lucas
			Ate		**82062900**		⊕ ABS	Ben		**84045201**	bore ø 20.6 ø 180 x 32	Bendix
			Luc		**82063300**		⊕ ABS	Luc		**84048001**	bore ø 20.6 ø 203.2 x 38	⊕ ABS 09/95→ →Orga 8729 →2000-10-01
			Bos		**82063700**			Luc		**84048006**	bore ø 20.6 ø 203.2 x 38	Orga 8730→ 2000-10-02→
				PRO	**92029803**	ø 247 x 10 x 34	Bosch ⊖ ABS			**94010300**	ø 229,0 x 50.5	Bendix ⊕ reinf. susp.
				PRO	**92043103**	ø 247 x 20.4 x 34.2	Teves ⊕ ABS			**94014300**	ø 180,0 x 44.5	→09/95
				PRO	**92048103**	ø 266 x 20.5 x 27.4	Bosch, Lucas ⊕ ABS Orga 8576→ 2000-05-01→			**94024900**	ø 202 x 46.5	⊕ ABS 09/95→

N - P

		kW / hp										
306 (7B, N3, N5)												
1.4 SL	06/94→05/01	532400 55 / 75		TPM0012								
1.6	07/00→05/01	532500 66 / 90	Bos	2339602	[–] 23396 18	Bosch	Luc	91031200	ø 180 x 32	Lucas
			Ate	2182702	[–] 21827 17.3	⊖ ABS	Ben	91038100	ø 228.6 x 42	Bendix ⊕ reinf. susp.
			Gir	2312401	[+] 23124 19.3	⊕ ABS	Ben	91045200	ø 180 x 32	Bendix
			Ate	82030600		⊖ ABS	Luc	91048000	ø 203.2 x 38	⊕ ABS
			Ate	82062900		⊖ ABS	Ben	97004700		Bendix
			Luc	82063300		⊕ ABS	Luc	97007600		Lucas
			Bos	82063700		Bosch	Ben	97010000		Bendix ⊕ reinf. susp.
				PRO 92043103	ø 247 x 20.4 x 34.2	⊖ ABS	Ben	97010400		⊕ ABS
				PRO 92048103	ø 266 x 20.5 x 27.4	⊕ ABS	Luc	84031202	bore ø 20.6 ø 180 x 32	Lucas
							Ben	84045201	bore ø 20.6 ø 180 x 32	Bendix
							Luc	84048001	bore ø 20.6 ø 203.2 x 38	⊕ ABS
								94010300	ø 229,0 x 50.5	Bendix ⊕ reinf. susp.
								94014300	ø 180,0 x 44.5	
								94024900	ø 202 x 46.5	⊕ ABS
1.6	10/00→05/01	532600 72 / 98	Bos	2339602	[–] 23396 18	Bosch	Luc	91031200	ø 180 x 32	Lucas
			Ate	2182702	[–] 21827 17.3	⊖ ABS	Ben	91038100	ø 228.6 x 42	Bendix ⊕ reinf. susp.
			Gir	2312401	[+] 23124 19.3	⊕ ABS	Ben	91045200	ø 180 x 32	Bendix
			Ate	82030600		⊖ ABS	Luc	91048000	ø 203.2 x 38	⊕ ABS
			Ate	82062900		⊖ ABS	Ben	97004700		Bendix
			Luc	82063300		⊕ ABS	Luc	97007600		Lucas
				PRO 92043103	ø 247 x 20.4 x 34.2	⊖ ABS	Ben	97010000		Bendix ⊕ reinf. susp.
				PRO 92048103	ø 266 x 20.5 x 27.4	⊕ ABS	Ben	97010400		⊕ ABS
				TPM0012			Luc	84031202	bore ø 20.6 ø 180 x 32	Lucas
							Ben	84045201	bore ø 20.6 ø 180 x 32	Bendix
							Luc	84048001	bore ø 20.6 ø 203.2 x 38	⊕ ABS
								94010300	ø 229,0 x 50.5	Bendix ⊕ reinf. susp.
								94014300	ø 180,0 x 44.5	
								94024900	ø 202 x 46.5	⊕ ABS
1.6 SR	06/94→10/00	532700 65 / 89	Bos	2339602	[–] 23396 18	Bosch	Luc	91031200	ø 180 x 32	Lucas
			Ate	2182702	[–] 21827 17.3	Teves	Ben	91038100	ø 228.6 x 42	Bendix ⊕ reinf. susp.
			Ate	2143001	[+] 21430 17.3	Teves	Ben	91045200	ø 180 x 32	Bendix
			Gir	2312401	[+] 23124 19.3	Lucas	Luc	91048000	ø 203.2 x 38	⊕ ABS 09/95→
			Ate	82030600		Teves	Ben	97004700		Bendix
			Ate	82062900			Luc	97007600		Lucas
			Luc	82063300			Ben	97010000		Bendix ⊕ reinf. susp.
			Bos	82063700			Ben	97010400		⊕ ABS 09/95→
				PRO 92043103	ø 247 x 20.4 x 34.2	Teves	Luc	84031202	bore ø 20.6 ø 180 x 32	Lucas
				PRO 92048103	ø 266 x 20.5 x 27.4	Bosch, Lucas	Ben	84045201	bore ø 20.6 ø 180 x 32	Bendix
				TPM0012			Luc	84048001	bore ø 20.6 ø 203.2 x 38	⊕ ABS 09/95→ →Orga 8729 →2000-10-01

kW / hp

306 (7B, N3, N5) 06/94→10/04

1.6 SR	06/94→10/00	532700 65 / 89							Luc		84048006	bore ø 20.6 ø 203.2 x 38	Orga 8730→ 2000-10-02→
											94010300	ø 229,0 x 50.5	Bendix ⊕ reinf. susp.
											94014300	ø 180,0 x 44.5	
											94024900	ø 202 x 46.5	⊕ ABS 09/95→
1.8	09/97→12/02	532800 76 / 103	Ate		2143001	[+] 21430 17.3			Ben		2097401	[o] 20974 11	⊕ rear disc brake
			Ate		82030600				Luc		91031200	ø 180 x 32	⊖ ABS ⊕ rear drum brake
				PRO	92043103	ø 247 x 20.4 x 34.2			Luc		91048000	ø 203.2 x 38	⊕ ABS ⊕ rear drum brake
					TPM0012				Bos		91056600	ø 228.6 x 42	⊕ ABS ⊕ rear drum brake
									Ben		97004700		⊖ ABS ⊕ rear drum brake
									Bos		84056600	bore ø 20.6 ø 228.6 x 42	⊕ ABS ⊕ rear drum brake
										PRO	92055003	ø 247 x 8 x 25.3	⊕ rear disc brake
											TPM0012		⊕ ABS Girling
											94010300	ø 229,0 x 50.5	⊕ ABS Bosch -brake ⊕ rear drum brake
											94014300	ø 180,0 x 44.5	⊖ ABS ⊕ rear drum brake
											94024900	ø 202 x 46.5	⊕ ABS Lucas -brake ⊕ rear drum brake
1.8 16V	03/97→05/01	532900 81 / 110	Bos		2339602	[–] 23396 18	Bosch		Ben		2097401	[o] 20974 11	⊕ rear disc brake
			Ate		2182702	[–] 21827 17.3	Teves		Ben		82029500		
			Gir		2312401	[+] 23124 19.3	Lucas		Luc		91031200	ø 180 x 32	⊕ rear drum brake Lucas
			Ate		82030600		Teves		Ben		91038100	ø 228.6 x 42	⊕ rear drum brake Bendix ⊕ reinf. susp.
			Ate		82062900				Ben		91045200	ø 180 x 32	⊕ rear drum brake Bendix
			Luc		82063300				Luc		91048000	ø 203.2 x 38	⊕ rear drum brake ⊕ ABS
			Bos		82063700				Ben		97004700		⊕ rear drum brake Bendix
				PRO	92043103	ø 247 x 20.4 x 34.2	Teves		Luc		97007600		⊕ rear drum brake Lucas
				PRO	92048103	ø 266 x 20.5 x 27.4	Bosch, Lucas		Ben		97010000		⊕ rear drum brake Bendix ⊕ reinf. susp.
					TPM0012				Ben		97010400		⊕ rear drum brake ⊕ ABS
									Ben		84045201	bore ø 20.6 ø 180 x 32	⊕ rear drum brake Bendix
										PRO	92055003	ø 247 x 8 x 25.3	⊕ rear disc brake
											TPM0012		
											94010300	ø 229,0 x 50.5	⊕ rear drum brake Bendix ⊕ reinf. susp.
											94014300	ø 180,0 x 44.5	⊕ rear drum brake ⊖ ABS
											94024900	ø 202 x 46.5	⊕ rear drum brake ⊕ ABS
1.8 16V	10/99→10/04	533000 86 / 117	Bos		2339602	[–] 23396 18			Ben		2097401	[o] 20974 11	⊕ rear disc brake
			Gir		2312401	[+] 23124 19.3			Luc		91048000	ø 203.2 x 38	⊕ rear drum brake
				PRO	92048103	ø 266 x 20.5 x 27.4			Bos		91056600	ø 228.6 x 42	⊕ rear drum brake
					TPM0012				Bos		97010100		Orga 08211→ ⊕ rear drum brake
										PRO	92055003	ø 247 x 8 x 25.3	⊕ rear disc brake
											TPM0012		
											94010300	ø 229,0 x 50.5	Bosch ⊕ rear drum brake
											94024900	ø 202 x 46.5	Girling ⊕ rear drum brake
1.8 D	05/97→06/00	533100 44 / 60	Bos		2339602	[–] 23396 18	Bosch		Luc		91031200	ø 180 x 32	Lucas

N - P

306 (7B, N3, N5) 06/94→10/04

1.8 D	05/97→06/00	533100 44 / 60	Ate		2182702	[–] 21827 17.3	Teves	Ben		91038100	ø 228.6 x 42	Bendix ⊕ reinf. susp.
			Gir		2312401	[+] 23124 19.3	Lucas	Ben		91045200	ø 180 x 32	Bendix
			Ate		82030600		Teves	Luc		91048000	ø 203.2 x 38	⊕ ABS
			Ate		82062900			Ben		97004700		Bendix
			Luc		82063300			Luc		97007600		Lucas
			Bos		82063700			Ben		97010000		Bendix ⊕ reinf. susp.
				PRO	92043103	ø 247 x 20.4 x 34.2	Teves	Ben		97010400		⊕ ABS
				PRO	92048103	ø 266 x 20.5 x 27.4	Bosch, Lucas	Ben		84045201	bore ø 20.6 ø 180 x 32	Bendix
										94010300	ø 229,0 x 50.5	Bendix ⊕ reinf. susp.
										94014300	ø 180,0 x 44.5	
										94024900	ø 202 x 46.5	⊕ ABS
1.8 ST	06/94→05/01	533200 74 / 101	Ate		2182702	[–] 21827 17.3		Ben		2097401	[o] 20974 11	⊕ rear disc brake
			Ate		2143001	[+] 21430 17.3		Ben		82029500		
			Ate		82030600			Luc		91031200	ø 180 x 32	⊕ rear drum brake Lucas ⊖ ABS
			Ate		82062900			Ben		91045200	ø 180 x 32	⊕ rear drum brake Bendix
				PRO	92043103	ø 247 x 20.4 x 34.2		Luc		91048000	ø 203.2 x 38	⊕ rear drum brake ⊕ ABS 09/95→
					TPM0012			Ben		97004700		⊕ rear drum brake Bendix
								Luc		97007600		⊕ rear drum brake Lucas
								Ben		97010400		⊕ rear drum brake ⊕ ABS 09/95→
								Luc		84031202	bore ø 20.6 ø 180 x 32	⊕ rear drum brake Lucas ⊖ ABS
								Ben		84045201	bore ø 20.6 ø 180 x 32	⊕ rear drum brake Bendix
									PRO	92055003	ø 247 x 8 x 25.3	⊕ rear disc brake
										TPM0012		
										94014300	ø 180,0 x 44.5	
1.9 D	03/98→05/01	533300 55 / 75	Ate		2182702	[–] 21827 17.3	Teves	Luc		91031200	ø 180 x 32	Lucas
			Ate		82030600		Teves	Ben		91038100	ø 228.6 x 42	Bendix ⊕ reinf. susp.
			Ate		82062900			Ben		91045200	ø 180 x 32	Bendix
				PRO	92043103	ø 247 x 20.4 x 34.2	Teves	Luc		91048000	ø 203.2 x 38	⊕ ABS
					TPM0012			Ben		97004700		Bendix
								Luc		97007600		Lucas
								Ben		97010000		Bendix ⊕ reinf. susp.
								Ben		97010400		⊕ ABS
								Ben		84045201	bore ø 20.6 ø 180 x 32	Bendix
								Luc		84048001	bore ø 20.6 ø 203.2 x 38	⊕ ABS →Orga 8729 →2000-10-01
								Luc		84048006	bore ø 20.6 ø 203.2 x 38	Orga 8730→ 2000-10-02→
										94010300	ø 229,0 x 50.5	Bendix ⊕ reinf. susp.
										94014300	ø 180,0 x 44.5	
										94024900	ø 202 x 46.5	⊕ ABS
1.9 D	09/98→05/01	533400 51 / 69	Bos		2339602	[–] 23396 18	Bosch	Luc		91031200	ø 180 x 32	Lucas
			Ate		2182702	[–] 21827 17.3	Teves	Ben		91038100	ø 228.6 x 42	Bendix ⊕ reinf. susp.

30 kW / hp

306 (7B, N3, N5) 06/94→10/04

1.9 D	09/98→05/01	533400 51 / 69	Gir		2312401	[+] 23124 19.3	Lucas	Ben		91045200	ø 180 x 32	Bendix
			Ate		82030600		Teves	Luc		91048000	ø 203.2 x 38	⊕ ABS
			Ate		82062900			Ben		97004700		Bendix
				PRO	92043103	ø 247 x 20.4 x 34.2	Teves	Luc		97007600		Lucas
				PRO	92048103	ø 266 x 20.5 x 27.4	Bosch, Lucas	Ben		97010000		Bendix ⊕ reinf. susp.
					TPM0012			Ben		97010400		⊕ ABS
								Luc		84031202	bore ø 20.6 ø 180 x 32	Lucas
								Ben		84045201	bore ø 20.6 ø 180 x 32	Bendix
								Luc		84048001	bore ø 20.6 ø 203.2 x 38	⊕ ABS
										94010300	ø 229,0 x 50.5	Bendix ⊕ reinf. susp.
										94014300	ø 180,0 x 44.5	
										94024900	ø 202 x 46.5	⊕ ABS
1.9 SLD	06/94→05/01	533500 47 / 64	Ate		2182702	[–] 21827 17.3	Teves	Luc		91031200	ø 180 x 32	Lucas
			Ate		2143001	[+] 21430 17.3	Teves	Ben		91038100	ø 228.6 x 42	Bendix ⊕ reinf. susp.
			Ate		82030600		Teves	Ben		91045200	ø 180 x 32	Bendix
			Ate		82062900			Luc		91048000	ø 203.2 x 38	⊕ ABS 09/95→
				PRO	92043103	ø 247 x 20.4 x 34.2	Teves	Ben		97004700		Bendix
					TPM0012			Luc		97007600		Lucas
								Ben		97010000		Bendix ⊕ reinf. susp.
								Ben		97010400		⊕ ABS 09/95→
								Luc		84031202	bore ø 20.6 ø 180 x 32	Lucas
								Ben		84045201	bore ø 20.6 ø 180 x 32	Bendix
								Luc		84048001	bore ø 20.6 ø 203.2 x 38	⊕ ABS 09/95→ →Orga 8729 →2000-10-01
								Luc		84048006	bore ø 20.6 ø 203.2 x 38	Orga 8730→ 2000-10-02→
										94010300	ø 229,0 x 50.5	Bendix ⊕ reinf. susp.
										94014300	ø 180,0 x 44.5	
										94024900	ø 202 x 46.5	⊕ ABS 09/95→
1.9 SLD	06/94→05/01	533600 50 / 68	Ate		2182702	[–] 21827 17.3	Teves	Luc		91031200	ø 180 x 32	Lucas
			Ate		2143001	[+] 21430 17.3	Teves	Ben		91038100	ø 228.6 x 42	Bendix ⊕ reinf. susp.
			Ate		82030600		Teves	Ben		91045200	ø 180 x 32	Bendix
			Ate		82062900			Luc		91048000	ø 203.2 x 38	⊕ ABS 09/95→
				PRO	92043103	ø 247 x 20.4 x 34.2	Teves	Ben		97004700		Bendix
					TPM0012			Luc		97007600		Lucas
								Ben		97010000		Bendix ⊕ reinf. susp.
								Ben		97010400		⊕ ABS 09/95→
								Luc		84031203	bore ø 20.6 ø 180 x 32	Lucas
								Ben		84045201	bore ø 20.6 ø 180 x 32	Bendix
								Luc		84048001	bore ø 20.6 ø 203.2 x 38	⊕ ABS 09/95→ →Orga 8729 →2000-10-01
								Luc		84048006	bore ø 20.6 ø 203.2 x 38	Orga 8730→ 2000-10-02→
										94010300	ø 229,0 x 50.5	Bendix ⊕ reinf. susp.

N - P

		kW / hp											
306 (7B, N3, N5)													
1.9 SLD	06/94→05/01	533600 50 / 68								94014300	ø 180,0 x 44.5	
										94024900	ø 202 x 46.5	⊕ ABS 09/95→
1.9 SRDT	06/94→05/01	533700 66 / 90	Ate		2182702	[–] 21827 17.3	Teves	Luc		91031200	ø 180 x 32	Lucas
			Ate		2143001	[+] 21430 17.3	Teves	Ben		91038100	ø 228.6 x 42	Bendix ⊕ reinf. susp.
			Ate		82030600		Teves	Ben		91045200	ø 180 x 32	Bendix
			Ate		82062900			Luc		91048000	ø 203.2 x 38	⊕ ABS 09/95→ 05/97→ ⊖ ABS
				PRO	92043103	ø 247 x 20.4 x 34.2	Teves	Ben		97004700		Bendix
					TPM0012			Luc		97007600		Lucas
								Ben		97010000		Bendix ⊕ reinf. susp.
								Ben		97010400		⊕ ABS 09/95→
								Luc		84031202	bore ø 20.6 ø 180 x 32	Lucas
								Ben		84045201	bore ø 20.6 ø 180 x 32	Bendix
								Luc		84048001	bore ø 20.6 ø 203.2 x 38	⊕ ABS 09/95→ →Orga 8729 →2000-10-01
								Luc		84048006	bore ø 20.6 ø 203.2 x 38	Orga 8730→ 2000-10-02→
										94010300	ø 229,0 x 50.5	Bendix ⊕ reinf. susp.
										94014300	ø 180,0 x 44.5	
										94024900	ø 202 x 46.5	⊕ ABS 09/95→ 05/97→ ⊖ ABS
2.0	03/97→05/01	533800 97 / 132	Bos		2339602	[–] 23396 18	Bosch	Ben		2097401	[o] 20974 11	
			Gir		2312401	[+] 23124 19.3	Lucas	Ben		82029500		
			Ate		82062900			Luc		91048000	ø 203.2 x 38	⊕ rear drum brake
			Luc		82063300				PRO	92055003	ø 247 x 8 x 25.3	
			Bos		82063700					TPM0012		
				PRO	92048103	ø 266 x 20.5 x 27.4	Bosch, Lucas			94024900	ø 202 x 46.5	⊕ rear drum brake
					TPM0012							
2.0	05/97→06/00	533900 99 / 135	Bos		2339602	[–] 23396 18	Bosch	Ben		2097401	[o] 20974 11	⊕ rear disc brake
			Ate		2182702	[–] 21827 17.3	Teves	Ben		82029500		
			Gir		2312401	[+] 23124 19.3	Lucas	Luc		91048000	ø 203.2 x 38	⊕ rear drum brake
			Ate		82030600		Teves		PRO	92055003	ø 247 x 8 x 25.3	⊕ rear disc brake
			Ate		82062900					94024900	ø 202 x 46.5	⊕ rear drum brake
			Luc		82063300							
			Bos		82063700							
				PRO	92043103	ø 247 x 20.4 x 34.2	Teves					
				PRO	92048103	ø 266 x 20.5 x 27.4	Bosch, Lucas					
2.0 HDI 90	06/99→05/01	534000 66 / 90	Bos		2339602	[–] 23396 18	Bosch	Ben		2097401	[o] 20974 11	⊕ rear disc brake
			Gir		2312401	[+] 23124 19.3	Lucas	Ben		82029500		
			Ate		82062900			Luc		91048000	ø 203.2 x 38	
			Luc		82063300			Bos		97010100		
			Bos		82063700			Luc		84048000	bore ø 19 ø 203.2 x 38	
				PRO	92048103	ø 266 x 20.5 x 27.4	Bosch, Lucas		PRO	92055003	ø 247 x 8 x 25.3	
					TPM0012					TPM0012		

30 kW / hp

306 (7B, N3, N5) 06/94→10/04

534000											
2.0 HDI 90	06/99→05/01	66 / 90								94024900	ø 202 x 46.5	
534100			Bos		2339602	[–] 23396 18		Ben		2097401	[o] 20974 11	⊕ rear disc brake
2.0 S16	06/94→05/01	110 / 150	Gir		2312401	[+] 23124 19.3	32000001→	Ben		82029500		
			Luc		2316901	[+] 23169 19.4	→32000000	Luc		91048000	ø 203.2 x 38	⊕ rear drum brake
			Luc		82062800		→32000000		PRO	92055003	ø 247 x 8 x 25.3	
			Luc		82063300		32000001→			TPM0012		
				PRO	92048103	ø 266 x 20.5 x 27.4				94024900	ø 202 x 46.5	⊕ rear drum brake
					TPM0012							
534200			Bos		2339602	[–] 23396 18		Ben		2097401	[o] 20974 11	
2.0 S16	06/94→05/01	112 / 152	Gir		2312401	[+] 23124 19.3	32000001→	Ben		82029500		
			Luc		2316901	[+] 23169 19.4	→32000000	Luc		91048000	ø 203.2 x 38	⊕ rear drum brake
			Luc		82062800		→32000000		PRO	92055003	ø 247 x 8 x 25.3	
			Luc		82063300		32000001→			TPM0012		
				PRO	92048103	ø 266 x 20.5 x 27.4				94024900	ø 202 x 46.5	⊕ rear drum brake
					TPM0012							
534300			Gir		2312401	[+] 23124 19.3	32000001→	Ben		2097401	[o] 20974 11	
2.0 ST	07/94→05/01	89 / 121	Luc		2316901	[+] 23169 19.4	→32000000	Ben		82029500		
			Luc		82062800		→32000000	Luc		91031200	ø 180 x 32	⊕ rear drum brake LUCAS
			Luc		82063300		32000001→	Ben		91038100	ø 228.6 x 42	⊕ rear drum brake Bendix ⊕ reinf. susp.
				PRO	92048103	ø 266 x 20.5 x 27.4		Ben		91045200	ø 180 x 32	⊕ rear drum brake Bendix
					TPM0012			Luc		91048000	ø 203.2 x 38	⊕ rear drum brake ⊕ ABS 09/95→
								Ben		97004700		⊕ rear drum brake Bendix
								Luc		97007600		⊕ rear drum brake Lucas
								Ben		97010000		⊕ rear drum brake Bendix ⊕ reinf. susp.
								Ben		97010400		⊕ rear drum brake ⊕ ABS 09/95→
								Luc		84031200	bore ø 19 ø 180 x 32	⊕ rear drum brake 'Lucas
								Ben		84038100	bore ø 20.6 ø 228.6 x 42	⊕ rear drum brake Bendix ⊕ reinf. susp.
								Ben		84045200	bore ø 20.6 ø 180 x 32	⊕ rear drum brake Bendix
								Luc		84048000	bore ø 19 ø 203.2 x 38	⊕ rear drum brake ⊕ ABS 09/95→
									PRO	92055003	ø 247 x 8 x 25.3	
										TPM0012		
										94010300	ø 229,0 x 50.5	⊕ rear drum brake Bendix ⊕ reinf. susp.
										94014300	ø 180,0 x 44.5	⊕ rear drum brake
										94024900	ø 202 x 46.5	⊕ rear drum brake ⊕ ABS 09/95→

306 Break (7E, N3, N5) 02/97→04/02

534400			Bos		2339602	[–] 23396 18	Bosch ⊕ ABS	Bos		91056600	ø 228.6 x 42	
1.4	03/97→04/02	55 / 75	Ate		2182702	[–] 21827 17.3	Teves ⊖ ABS	Bos		84056602	bore ø 20.6 ø 228.6 x 42	
			Ate		82030600		Teves			94010300	ø 229,0 x 50.5	
			Ate		82062900							
			Bos		82063700							

N - P

30 kW / hp

306 Break (7E, N3, N5) 02/97→04/02

1.4	03/97→04/02	534400 55 / 75		PRO	92043103	ø 247 x 20.4 x 34.2	Teves ⊖ ABS					
				PRO	92048103	ø 266 x 20.5 x 27.4	Bosch, Lucas ⊕ ABS					
					TPM0012							
1.6	03/97→10/00	534500 65 / 89	Bos		2339602	[–] 23396 18	Bosch	Bos		91056600	ø 228.6 x 42	
			Ate		2182702	[–] 21827 17.3	Teves	Bos		84056602	bore ø 20.6 ø 228.6 x 42	
			Gir		2312401	[+] 23124 19.3	Lucas			94010300	ø 229,0 x 50.5	
			Ate		82030600		Teves					
			Ate		82062900							
			Luc		82063300							
			Bos		82063700							
				PRO	92043103	ø 247 x 20.4 x 34.2	Teves					
				PRO	92048103	ø 266 x 20.5 x 27.4	Bosch, Lucas					
					TPM0012							
1.6	10/00→04/02	534600 72 / 98	Bos		2339602	[–] 23396 18	Bosch	Bos		91056600	ø 228.6 x 42	
			Ate		2182702	[–] 21827 17.3	Teves	Bos		84056600	bore ø 20.6 ø 228.6 x 42	
			Gir		2312401	[+] 23124 19.3	Lucas			94010300	ø 229,0 x 50.5	
			Ate		82030600		Teves					
			Ate		82062900							
			Luc		82063300							
			Bos		82063700							
				PRO	92043103	ø 247 x 20.4 x 34.2	Teves					
				PRO	92048103	ø 266 x 20.5 x 27.4	Bosch, Lucas					
					TPM0012							
1.8	03/97→04/02	534700 74 / 101	Bos		2339602	[–] 23396 18	Bosch	Bos		91056600	ø 228.6 x 42	
			Gir		2312401	[+] 23124 19.3	Lucas	Bos		84056600	bore ø 20.6 ø 228.6 x 42	
			Ate		82062900					94010300	ø 229,0 x 50.5	
			Luc		82063300							
			Bos		82063700							
				PRO	92048103	ø 266 x 20.5 x 27.4						
					TPM0012							
1.8 16V 2.0	03/97→04/02 03/97→04/02	534800 81 / 110 97 / 132	Bos		2339602	[–] 23396 18	Bosch	Ben		2097401	[o] 20974 11	⊕ rear disc brake
			Gir		2312401	[+] 23124 19.3	Lucas	Ben		82029500		
			Ate		82062900			Bos		91056600	ø 228.6 x 42	⊕ rear drum brake
			Luc		82063300				PRO	92055003	ø 247 x 8 x 25.3	⊕ rear disc brake
			Bos		82063700					TPM0012		
				PRO	92048103	ø 266 x 20.5 x 27.4				94010300	ø 229,0 x 50.5	⊕ rear drum brake
					TPM0012							
1.8 D	05/97→06/00	534900 44 / 60	Bos		2339602	[–] 23396 18	Bosch	Bos		91056600	ø 228.6 x 42	
			Gir		2312401	[+] 23124 19.3	Lucas	Bos		84056602	bore ø 20.6 ø 228.6 x 42	
			Ate		82062900					94010300	ø 229,0 x 50.5	

N - P

		kW / hp										
306 Break (7E, N3, N5) 02/97→04/02												
1.8 D	05/97→06/00	534900 44 / 60	Luc		82063300							
			Bos		82063700							
				PRO	92048103	ø 266 x 20.5 x 27.4	Bosch, Lucas					
1.9 D	03/97→04/02	535000 50 / 68	Bos		2339602	[–] 23396 18	Bosch	Bos		91056600	ø 228.6 x 42	
			Gir		2312401	[+] 23124 19.3	Lucas	Bos		84056600	bore ø 20.6 ø 228.6 x 42	⊖ ABS
			Ate		82062900			Bos		84056601	bore ø 22.2 ø 228.6 x 42	⊕ ABS
			Luc		82063300					94010300	ø 229,0 x 50.5	
			Bos		82063700							
				PRO	92048103	ø 266 x 20.5 x 27.4						
					TPM0012							
1.9 D	05/97→05/99	535100 51 / 69	Bos		2339602	[–] 23396 18	Bosch	Bos		91056600	ø 228.6 x 42	
			Gir		2312401	[+] 23124 19.3	Lucas	Bos		84056602	bore ø 20.6 ø 228.6 x 42	
			Ate		82062900					94010300	ø 229,0 x 50.5	
			Luc		82063300							
			Bos		82063700							
				PRO	92048103	ø 266 x 20.5 x 27.4						
1.9 D	03/98→04/02	535200 55 / 75	Bos		2339602	[–] 23396 18	Bosch	Bos		91056600	ø 228.6 x 42	
			Ate		2182702	[–] 21827 17.3	Teves	Bos		84056600	bore ø 20.6 ø 228.6 x 42	⊖ ABS
			Gir		2312401	[+] 23124 19.3	Lucas	Bos		84056601	bore ø 22.2 ø 228.6 x 42	⊕ ABS
			Ate		82030600		Teves			94010300	ø 229,0 x 50.5	
			Ate		82062900							
			Luc		82063300							
			Bos		82063700							
				PRO	92043103	ø 247 x 20.4 x 34.2						
				PRO	92048103	ø 266 x 20.5 x 27.4						
					TPM0012							
1.9 D	09/98→04/02	535300 51 / 69	Bos		2339602	[–] 23396 18	Bosch	Bos		91056600	ø 228.6 x 42	
			Ate		2182702	[–] 21827 17.3	Teves	Bos		84056602	bore ø 20.6 ø 228.6 x 42	
			Gir		2312401	[+] 23124 19.3	Lucas			94010300	ø 229,0 x 50.5	
			Ate		82030600		Teves					
			Ate		82062900							
			Luc		82063300							
			Bos		82063700							
				PRO	92048103	ø 266 x 20.5 x 27.4						
					TPM0012							
1.9 TD	02/97→04/02	535400 66 / 90	Bos		2339602	[–] 23396 18	Bosch	Ben		2097401	[o] 20974 11	⊕ rear disc brake
			Ate		2182702	[–] 21827 17.3	Teves	Ben		82029500		
			Gir		2312401	[+] 23124 19.3	Lucas	Bos		91056600	ø 228.6 x 42	⊕ rear drum brake
			Ate		82030600		Teves	Bos		84056601	bore ø 22.2 ø 228.6 x 42	⊕ rear drum brake
			Ate		82062900				PRO	92055003	ø 247 x 8 x 25.3	⊕ rear disc brake

N - P

		kW / hp										
306 Break (7E, N3, N5) 02/97→04/02												
1.9 TD	02/97→04/02	535400 66 / 90	Luc		82063300				TPM0012		
			Bos		82063700				94010300	ø 229,0 x 50.5	⊕ rear drum brake
				PRO	92048103	ø 266 x 20.5 x 27.4					
					TPM0012						
2.0 16V	03/97→04/02	535500 99 / 135	Bos		2339602	[–] 23396 18		Ben	2097401	[o] 20974 11	⊕ rear disc brake
			Gir		2312401	[+] 23124 19.3		Bos	91056600	ø 228.6 x 42	⊕ rear drum brake
				PRO	92048103	ø 266 x 20.5 x 27.4		Bos	97010100		⊕ rear drum brake
					TPM0012				PRO 92055003	ø 247 x 8 x 25.3	⊕ rear disc brake
									TPM0012		
									94010300	ø 229,0 x 50.5	⊕ rear drum brake
2.0 HDI 90	06/99→04/02	535600 66 / 90	Bos		2339602	[–] 23396 18	Bosch	Ben	2097401	[o] 20974 11	⊕ rear disc brake
			Gir		2312401	[+] 23124 19.3	Lucas	Ben	82029500		⊕ rear disc brake
			Ate		82062900			Bos	91056600	ø 228.6 x 42	⊕ rear drum brake
			Luc		82063300				PRO 92055003	ø 247 x 8 x 25.3	⊕ rear disc brake
			Bos		82063700				TPM0012		
				PRO	92048103	ø 266 x 20.5 x 27.4			94010300	ø 229,0 x 50.5	⊕ rear drum brake
					TPM0012						
306 Cabriolet (7D, N3, N5) 03/94→04/02 → 306 Convertible (7D, N3, N5), Page 860												
306 Convertible (7D, N3, N5) 03/94→04/02												
1.6	04/96→10/00	535700 65 / 89	Bos		2339602	[–] 23396 18	Bosch	Luc	91031200	ø 180 x 32	Lucas
			Ate		2182702	[–] 21827 17.3	Teves	Ben	91038100	ø 228.6 x 42	Bendix ⊕ reinf. susp.
			Ate		2143001	[+] 21430 17.3	Teves	Ben	91045200	ø 180 x 32	Bendix
			Gir		2312401	[+] 23124 19.3	Lucas	Luc	91048000	ø 203.2 x 38	⊕ ABS
			Ate		82030600		Teves	Ben	97004700		Bendix
			Ate		82062900			Luc	97007600		Lucas
			Luc		82063300			Ben	97010000		Bendix ⊕ reinf. susp.
			Bos		82063700			Ben	97010400		⊕ ABS
				PRO	92043103	ø 247 x 20.4 x 34.2	Teves	Luc	84031202	bore ø 20.6 ø 180 x 32	Lucas
				PRO	92048103	ø 266 x 20.5 x 27.4	Bosch, Lucas	Ben	84045201	bore ø 20.6 ø 180 x 32	Bendix
					TPM0012			Luc	84048001	bore ø 20.6 ø 203.2 x 38	⊕ ABS →Orga 8729 →2000-10-01
								Luc	84048006	bore ø 20.6 ø 203.2 x 38	Orga 8730→ 2000-10-02→
									94010300	ø 229,0 x 50.5	Bendix ⊕ reinf. susp.
									94014300	ø 180,0 x 44.5	
									94024900	ø 202 x 46.5	⊕ ABS
1.6	10/00→04/02	535800 72 / 98	Bos		2339602	[–] 23396 18	⊕ ABS Bosch	Luc	91048000	ø 203.2 x 38	
			Ate		2182702	[–] 21827 17.3	⊖ ABS	Luc	97007600		
			Gir		2312401	[+] 23124 19.3	⊕ ABS Lucas	Luc	84048006	bore ø 20.6 ø 203.2 x 38	
			Ate		82030600		⊖ ABS		94024900	ø 202 x 46.5	
			Ate		82062900		⊖ ABS				
			Luc		82063300		⊕ ABS				
			Bos		82063700		⊕ ABS Bosch				

kW / hp

306 Convertible (7D, N3, N5) 03/94→04/02

1.6	10/00→04/02	535800 72 / 98		PRO	92043103	ø 247 x 20.4 x 34.2	⊖ ABS						
				PRO	92048103	ø 266 x 20.5 x 27.4	⊕ ABS						
					TPM0012								
1.8	03/94→04/02	535900 74 / 101	Ate		2182702	[–] 21827 17.3		Ben		2097401	[o] 20974 11	⊕ rear disc brake	
			Ate		2143001	[+] 21430 17.3		Ben		82029500			
			Ate		82030600			Luc		91031200	ø 180 x 32	⊕ rear drum brake Lucas	
			Ate		82062900			Ben		91045200	ø 180 x 32	⊕ rear drum brake Bendix	
				PRO	92043103	ø 247 x 20.4 x 34.2		Luc		91048000	ø 203.2 x 38	⊕ rear drum brake ⊕ ABS 09/95→	
					TPM0012			Ben		97004700		⊕ rear drum brake Bendix	
								Luc		97007600		⊕ rear drum brake Lucas	
								Ben		97010400		⊕ rear drum brake ⊕ ABS 09/95→	
								Luc		84031202	bore ø 20.6 ø 180 x 32	⊕ rear drum brake Lucas	
								Ben		84045201	bore ø 20.6 ø 180 x 32	⊕ rear drum brake Bendix	
								Luc		84048001	bore ø 20.6 ø 203.2 x 38	⊕ ABS 09/95→ →Orga 8729 →2000-10-01	
								Luc		84048006	bore ø 20.6 ø 203.2 x 38	Orga 8730→ 2000-10-02→	
									PRO	92055003	ø 247 x 8 x 25.3	⊕ rear disc brake	
										TPM0012			
										94014300	ø 180,0 x 44.5	⊕ rear drum brake	
										94024900	ø 202 x 46.5	⊕ rear drum brake 09/95→ ⊕ ABS	
1.8	05/97→04/99	536000 74 / 101	Ate		2182702	[–] 21827 17.3		Ben		82029500			
			Ate		82030600			Luc		91031200	ø 180 x 32	⊕ rear drum brake Lucas	
			Ate		82062900			Ben		91045200	ø 180 x 32	⊕ rear drum brake Bendix	
				PRO	92043103	ø 247 x 20.4 x 34.2		Luc		91048000	ø 203.2 x 38	⊕ rear drum brake ⊕ ABS	
								Ben		97004700		⊕ rear drum brake Bendix	
								Luc		97007600		⊕ rear drum brake Lucas	
								Ben		97010400		⊕ rear drum brake ⊕ ABS	
								Luc		84031202	bore ø 20.6 ø 180 x 32	⊕ rear drum brake Lucas	
								Ben		84045201	bore ø 20.6 ø 180 x 32	⊕ rear drum brake Bendix	
								Luc		84048001	bore ø 20.6 ø 203.2 x 38	⊕ rear drum brake ⊕ ABS	
										94014300	ø 180,0 x 44.5	⊖ ABS	
										94024900	ø 202 x 46.5	⊕ ABS	
1.8 16V	07/00→04/02	536100 81 / 110	Bos		2339602	[–] 23396 18	Bosch	Ben		2097401	[o] 20974 11	⊕ rear disc brake	
			Gir		2312401	[+] 23124 19.3	Lucas	Ben		82029500			
			Ate		82062900			Luc		91048000	ø 203.2 x 38	⊕ rear drum brake	
			Luc		82063300			Luc		97007600		⊕ rear drum brake Lucas	
			Bos		82063700				PRO	92055003	ø 247 x 8 x 25.3	⊕ rear disc brake	
				PRO	92048103	ø 266 x 20.5 x 27.4	Bosch, Lucas			TPM0012			
					TPM0012					94024900	ø 202 x 46.5	⊕ rear drum brake	
2.0	03/94→04/02	536200 89 / 121	Gir		2312401	[+] 23124 19.3	32000001→	Ben		2097401	[o] 20974 11	⊕ rear disc brake	
			Luc		2316901	[+] 23169 19.4	→32000000	Ben		82029500			

N - P

		kW / hp										
306 Convertible (7D, N3, N5) 03/94→04/02												
536200			Luc		82062800		→32000000	Luc		91031200	ø 180 x 32	⊕ rear drum brake Lucas
2.0	03/94→04/02	89 / 121	Luc		82063300		32000001→	Ben		91038100	ø 228.6 x 42	⊕ rear drum brake Bendix ⊕ reinf. susp.
				PRO	92048103	ø 266 x 20.5 x 27.4		Ben		91045200	ø 180 x 32	⊕ rear drum brake Bendix
								Luc		91048000	ø 203.2 x 38	⊕ rear drum brake ⊕ ABS 09/95→
								Ben		97004700		⊕ rear drum brake Bendix
								Luc		97007600		⊕ rear drum brake Lucas
								Ben		97010000		⊕ rear drum brake Bendix ⊕ reinf. susp.
								Ben		97010400		⊕ rear drum brake ⊕ ABS 09/95→
								Luc		84031200	bore ø 19 ø 180 x 32	⊕ rear drum brake *Lucas
								Ben		84038100	bore ø 20.6 ø 228.6 x 42	⊕ rear drum brake Bendix ⊕ reinf. susp.
								Ben		84045200	bore ø 20.6 ø 180 x 32	⊕ rear drum brake Bendix
								Luc		84048000	bore ø 19 ø 203.2 x 38	⊕ rear drum brake ⊕ ABS 09/95→
									PRO	92055003	ø 247 x 8 x 25.3	⊕ rear disc brake
										TPM0012		
										94010300	ø 229,0 x 50.5	⊕ rear drum brake Bendix ⊕ reinf. susp.
										94014300	ø 180,0 x 44.5	⊕ rear drum brake
										94024900	ø 202 x 46.5	⊕ rear drum brake 09/95→ ⊕ ABS
536300			Bos		2339602	[–] 23396 18	Bosch	Ben		2097401	[o] 20974 11	
2.0 16V	03/97→04/02	97 / 132	Gir		2312401	[+] 23124 19.3	Lucas	Ben		82029500		
			Ate		82062900			Luc		91048000	ø 203.2 x 38	⊕ rear drum brake
			Luc		82063300				PRO	92055003	ø 247 x 8 x 25.3	
			Bos		82063700					TPM0012		
				PRO	92048103	ø 266 x 20.5 x 27.4	Bosch, Lucas			94024900	ø 202 x 46.5	⊕ rear drum brake
					TPM0012							
536400			Bos		2339602	[–] 23396 18		Ben		2097401	[o] 20974 11	⊕ rear disc brake
2.0 16V	03/97→04/02	99 / 135	Gir		2312401	[+] 23124 19.3		Luc		91048000	ø 203.2 x 38	⊕ rear drum brake ⊕ ABS
				PRO	92048103	ø 266 x 20.5 x 27.4		Ben		97010400		⊕ rear drum brake ⊕ ABS
					TPM0012				PRO	92055003	ø 247 x 8 x 25.3	⊕ rear disc brake
										TPM0012		
										94024900	ø 202 x 46.5	⊕ rear drum brake ⊕ ABS
306 Hatchback (7A, 7C, N3, N5) 04/93→12/02												
536500			Bos		2198004	[–] 21980 18	Bosch ⊖ ABS 32000001→	Luc		91031200	ø 180 x 32	Lucas
1.1	05/93→05/01	44 / 60	Ate		2182702	[–] 21827 17.3	Teves ⊕ ABS	Ben		91038100	ø 228.6 x 42	Bendix ⊕ reinf. susp.
			Ben		2090602	[o] 20906 18	Bendix ⊖ ABS →32000000	Ben		91045200	ø 180 x 32	Bendix
			Ate		2143001	[+] 21430 17.3	Teves ⊕ ABS	Luc		91048000	ø 203.2 x 38	⊕ ABS 09/95→
			Ben		2090604	[+] 20906 18	Bendix ⊖ ABS →32000000	Ben		97004700		Bendix
			Ben		82032200		→32000000 ⊖ ABS	Luc		97007600		Lucas
			Ate		82030600		Teves ⊕ ABS	Ben		97010000		Bendix ⊕ reinf. susp.
			Ate		82062900		⊕ ABS	Ben		97010400		⊕ ABS 09/95→
			Bos		82063700			Luc		84031202	bore ø 20.6 ø 180 x 32	Lucas

N - P

306 Hatchback (7A, 7C, N3, N5) 04/93→12/02

		kW / hp											
1.1	05/93→05/01	536500 44 / 60		PRO	92029803	ø 247 x 10 x 34	Bosch ⊖ ABS	Ben		84045201	bore ø 20.6 ø 180 x 32	Bendix
				PRO	92043103	ø 247 x 20.4 x 34.2	Teves ⊕ ABS			94010300	ø 229,0 x 50.5	Bendix ⊕ reinf. susp.
					TPM0012					94014300	ø 180,0 x 44.5	
										94024900	ø 202 x 46.5	⊕ ABS 09/95→
1.4	05/93→05/01	536600 55 / 75	Bos		2198004	[–] 21980 18	Bosch ⊖ ABS 32000001→	Luc		91031200	ø 180 x 32	Lucas
			Bos		2339602	[–] 23396 18	Bosch ⊕ ABS Orga 8576→ 2000-05-01→	Ben		91038100	ø 228.6 x 42	Bendix ⊕ reinf. susp.
			Ate		2182702	[–] 21827 17.3	Teves ⊕ ABS	Ben		91045200	ø 180 x 32	Bendix
			Ben		2090602	[o] 20906 18	Bendix ⊖ ABS →32000000	Luc		91048000	ø 203.2 x 38	⊕ ABS 09/95→
			Ate		2143001	[+] 21430 17.3	Teves ⊕ ABS	Ben		97004700		Bendix
			Gir		2312401	[+] 23124 19.3	Lucas ⊕ ABS Orga 8576→ 2000-05-01→	Luc		97007600		Lucas
			Ben		2090604	[+] 20906 18	Bendix ⊖ ABS →32000000	Ben		97010000		Bendix ⊕ reinf. susp.
			Ben		82032200		→32000000 ⊖ ABS	Ben		97010400		⊕ ABS 09/95→
			Ate		82030600		Teves ⊕ ABS	Luc		84031202	bore ø 20.6 ø 180 x 32	Lucas
			Ate		82062900		⊕ ABS	Ben		84045201	bore ø 20.6 ø 180 x 32	Bendix
			Bos		82063700			Luc		84048001	bore ø 20.6 ø 203.2 x 38	⊕ ABS 09/95→ →Orga 8729 →2000-10-01
				PRO	92029803	ø 247 x 10 x 34	Bosch ⊖ ABS	Luc		84048006	bore ø 20.6 ø 203.2 x 38	Orga 8730→ 2000-10-02→
				PRO	92043103	ø 247 x 20.4 x 34.2	Teves ⊕ ABS			94010300	ø 229,0 x 50.5	Bendix ⊕ reinf. susp.
				PRO	92048103	ø 266 x 20.5 x 27.4	Bosch, Lucas ⊕ ABS Orga 8576→ 2000-05-01→			94014300	ø 180,0 x 44.5	
					TPM0012					94024900	ø 202 x 46.5	⊕ ABS 09/95→
1.6	05/93→10/00	536700 65 / 89	Bos		2339602	[–] 23396 18	Bosch	Luc		91031200	ø 180 x 32	Lucas
			Ate		2182702	[–] 21827 17.3	Teves	Ben		91038100	ø 228.6 x 42	Bendix ⊕ reinf. susp.
			Ate		2143001	[+] 21430 17.3	Teves	Ben		91045200	ø 180 x 32	Bendix
			Gir		2312401	[+] 23124 19.3	Lucas	Luc		91048000	ø 203.2 x 38	⊕ ABS 09/95→
			Ate		82030600		Teves	Ben		97004700		Bendix
			Ate		82062900			Luc		97007600		Lucas
			Luc		82063300			Ben		97010000		Bendix ⊕ reinf. susp.
			Bos		82063700			Ben		97010400		⊕ ABS 09/95→
				PRO	92043103	ø 247 x 20.4 x 34.2	Teves	Luc		84031202	bore ø 20.6 ø 180 x 32	Lucas
				PRO	92048103	ø 266 x 20.5 x 27.4	Bosch, Lucas	Ben		84045201	bore ø 20.6 ø 180 x 32	Bendix
					TPM0012			Luc		84048001	bore ø 20.6 ø 203.2 x 38	⊕ ABS 09/95→ →Orga 8729 →2000-10-01
								Luc		84048006	bore ø 20.6 ø 203.2 x 38	Orga 8730→ 2000-10-02→
										94010300	ø 229,0 x 50.5	Bendix ⊕ reinf. susp.
										94014300	ø 180,0 x 44.5	
										94024900	ø 202 x 46.5	⊕ ABS 09/95→
1.6	07/00→05/01	536800 66 / 90	Bos		2339602	[–] 23396 18	Bosch	Luc		91031200	ø 180 x 32	Lucas
			Ate		2182702	[–] 21827 17.3	Teves	Ben		91038100	ø 228.6 x 42	Bendix ⊕ reinf. susp.
			Gir		2312401	[+] 23124 19.3	Lucas	Ben		91045200	ø 180 x 32	Bendix
			Ate		82030600		Teves	Luc		91048000	ø 203.2 x 38	⊕ ABS
			Ate		82062900			Ben		97004700		Bendix
			Bos		82063700			Luc		97007600		Lucas

306 Hatchback (7A, 7C, N3, N5) 04/93→12/02

		kW / hp											
1.6	07/00→05/01	536800 66 / 90		PRO	92043103	ø 247 x 20.4 x 34.2	Teves	Ben		97010000		Bendix ⊕ reinf. susp.
				PRO	92048103	ø 266 x 20.5 x 27.4	Bosch, Lucas	Ben		97010400		⊕ ABS
								Luc		84031202	bore ø 20.6 ø 180 x 32	Lucas
								Ben		84045201	bore ø 20.6 ø 180 x 32	Bendix
										94010300	ø 229,0 x 50.5	Bendix ⊕ reinf. susp.
										94014300	ø 180,0 x 44.5	
										94024900	ø 202 x 46.5	⊕ ABS
1.6	10/00→05/01	536900 72 / 98	Bos		2339602	[–] 23396 18		Luc		91031200	ø 180 x 32	Lucas
			Ate		2182702	[–] 21827 17.3	⊖ ABS	Ben		91038100	ø 228.6 x 42	Bendix ⊕ reinf. susp.
			Gir		2312401	[+] 23124 19.3	⊕ ABS	Ben		91045200	ø 180 x 32	Bendix
			Ate		82030600		⊖ ABS	Luc		91048000	ø 203.2 x 38	⊕ ABS
			Ate		82062900		⊖ ABS	Ben		97004700		Bendix
			Luc		82063300		⊕ ABS	Luc		97007600		Lucas
			Bos		82063700		Bosch	Ben		97010000		Bendix ⊕ reinf. susp.
				PRO	92043103	ø 247 x 20.4 x 34.2	⊖ ABS	Luc		84031202	bore ø 20.6 ø 180 x 32	Lucas
				PRO	92048103	ø 266 x 20.5 x 27.4	⊕ ABS	Ben		84045201	bore ø 20.6 ø 180 x 32	Bendix
					TPM0012			Luc		84048001	bore ø 20.6 ø 203.2 x 38	⊕ ABS
										94014300	ø 180,0 x 44.5	
										94024900	ø 202 x 46.5	⊕ ABS
1.8	05/93→05/01	537000 74 / 101	Ate		2182702	[–] 21827 17.3		Ben		2097401	[o] 20974 11	⊕ rear disc brake
			Ate		2143001	[+] 21430 17.3		Ben		82029500		
			Ate		82030600			Luc		91031200	ø 180 x 32	⊕ rear drum brake Lucas
			Ate		82062900			Ben		91045200	ø 180 x 32	⊕ rear drum brake Bendix
				PRO	92043103	ø 247 x 20.4 x 34.2		Luc		91048000	ø 203.2 x 38	⊕ rear drum brake ⊕ ABS 09/95→
					TPM0012			Ben		97004700		⊕ rear drum brake Bendix
								Luc		97007600		⊕ rear drum brake Lucas
								Ben		97010400		⊕ rear drum brake ⊕ ABS 09/95→
								Luc		84031202	bore ø 20.6 ø 180 x 32	⊕ rear drum brake Lucas
								Ben		84045201	bore ø 20.6 ø 180 x 32	⊕ rear drum brake Bendix
								Luc		84048001	bore ø 20.6 ø 203.2 x 38	⊕ ABS 09/95→ →Orga 8729 →2000-10-01
								Luc		84048006	bore ø 20.6 ø 203.2 x 38	Orga 8730→ 2000-10-02→
									PRO	92055003	ø 247 x 8 x 25.3	⊕ rear disc brake
										TPM0012		
										94014300	ø 180,0 x 44.5	
										94024900	ø 202 x 46.5	
1.8	05/97→04/99	537100 74 / 101	Bos		2339602	[–] 23396 18	Bosch	Ben		2097401	[o] 20974 11	⊕ rear disc brake
			Ate		2182702	[–] 21827 17.3	Teves	Luc		91031200	ø 180 x 32	Lucas
			Gir		2312401	[+] 23124 19.3	Lucas	Ben		91038100	ø 228.6 x 42	Bendix ⊕ reinf. susp.
			Ate		82030600		Teves	Ben		91045200	ø 180 x 32	Bendix
			Ate		82062900			Luc		91048000	ø 203.2 x 38	⊕ ABS

kW / hp

306 Hatchback (7A, 7C, N3, N5) 04/93→12/02

1.8	05/97→04/99	537100 74 / 101	Luc		82063300			Ben		97004700			Bendix
			Bos		82063700			Luc		97007600			Lucas
				PRO	92043103	ø 247 x 20.4 x 34.2	Teves	Ben		97010000			Bendix ⊕ reinf. susp.
				PRO	92048103	ø 266 x 20.5 x 27.4	Bosch, Lucas	Ben		97010400			⊕ ABS
								Luc		84031202	bore ø 20.6 ø 180 x 32		Lucas
								Ben		84045201	bore ø 20.6 ø 180 x 32		Bendix
									PRO	92055003	ø 247 x 8 x 25.3		⊕ rear disc brake
										94010300	ø 229,0 x 50.5		Bendix ⊕ reinf. susp.
										94014300	ø 180,0 x 44.5		
										94024900	ø 202 x 46.5		⊕ ABS
1.8	09/00→12/02	537200 75 / 102	Bos		2339602	[–] 23396 18	⊕ ABS	Luc		91031200	ø 180 x 32		⊖ ABS
			Ate		2182702	[–] 21827 17.3	⊖ ABS →Orga 9002	Ben		91045200	ø 180 x 32		⊖ ABS
			Gir		2312401	[+] 23124 19.3	⊕ ABS	Luc		91048000	ø 203.2 x 38		⊕ ABS
			Ate		82030600		⊖ ABS →Orga 9002	Bos		91056600	ø 228.6 x 42		⊕ ABS
				PRO	92043103	ø 247 x 20.4 x 34.2	⊖ ABS →Orga 9002	Ben		97004700			⊖ ABS
				PRO	92048103	ø 266 x 20.5 x 27.4	⊕ ABS	Bos		97010100			⊕ ABS
					TPM0012			Bos		84056602	bore ø 20.6 ø 228.6 x 42		⊕ ABS
										TPM0012			⊕ ABS Bosch -brake
										94010300	ø 229,0 x 50.5		⊕ ABS Bosch -brake
										94014300	ø 180,0 x 44.5		⊖ ABS
										94024900	ø 202 x 46.5		⊕ ABS Lucas -brake
1.8 16V	03/97→05/01	537300 81 / 110	Bos		2339602	[–] 23396 18	Bosch	Ben		2097401	[o] 20974 11		⊕ rear disc brake
			Ate		2182702	[–] 21827 17.3	Teves	Ben		82029500			
			Ate		2143001	[+] 21430 17.3	Teves	Luc		91031200	ø 180 x 32		⊕ rear drum brake Lucas
			Gir		2312401	[+] 23124 19.3	Lucas	Ben		91038100	ø 228.6 x 42		⊕ rear drum brake Bendix ⊕ reinf. susp.
			Ate		82030600		Teves	Ben		91045200	ø 180 x 32		⊕ rear drum brake Bendix
			Ate		82062900			Luc		91048000	ø 203.2 x 38		⊕ rear drum brake ⊕ ABS
			Luc		82063300			Ben		97004700			⊕ rear drum brake Bendix
			Bos		82063700			Luc		97007600			⊕ rear drum brake Lucas
				PRO	92043103	ø 247 x 20.4 x 34.2	Teves	Ben		97010000			⊕ rear drum brake Bendix ⊕ reinf. susp.
				PRO	92048103	ø 266 x 20.5 x 27.4	Bosch, Lucas	Ben		97010400			⊕ rear drum brake ⊕ ABS
					TPM0012			Ben		84045201	bore ø 20.6 ø 180 x 32		⊕ rear drum brake Bendix
									PRO	92055003	ø 247 x 8 x 25.3		⊕ rear disc brake
										TPM0012			
										94010300	ø 229,0 x 50.5		⊕ rear drum brake Bendix ⊕ reinf. susp.
										94014300	ø 180,0 x 44.5		⊕ rear drum brake
1.8 D	04/93→05/99	537400 44 / 60	Bos		2339602	[–] 23396 18	Bosch	Luc		91031200	ø 180 x 32		Lucas
			Ate		2182702	[–] 21827 17.3	Teves	Ben		91038100	ø 228.6 x 42		Bendix ⊕ reinf. susp.
			Ate		2143001	[+] 21430 17.3	Teves	Ben		91045200	ø 180 x 32		Bendix
			Gir		2312401	[+] 23124 19.3	Lucas	Luc		91048000	ø 203.2 x 38		⊕ ABS 09/95→

N - P

		kW / hp											
306 Hatchback (7A, 7C, N3, N5) 04/93→12/02													
1.8 D	04/93→05/99	537400 44 / 60	Ate		**82030600**		Teves	Ben		**97004700**		Bendix
			Ate		**82062900**			Luc		**97007600**		Lucas
			Luc		**82063300**			Ben		**97010000**		⊕ reinf. susp.
			Bos		**82063700**			Ben		**97010400**		⊕ ABS 09/95→
				PRO	**92043103**	ø 247 x 20.4 x 34.2	Teves	Luc		**84031200**	bore ø 19 ø 180 x 32	Lucas
				PRO	**92048103**	ø 266 x 20.5 x 27.4	Bosch, Lucas	Ben		**84045200**	bore ø 20.6 ø 180 x 32	Bendix
								Luc		**84048001**	bore ø 20.6 ø 203.2 x 38	⊕ ABS 09/95→
										94010300	ø 229,0 x 50.5	Bendix ⊕ reinf. susp.
										94014300	ø 180,0 x 44.5	
										94024900	ø 202 x 46.5	⊕ ABS 09/95→
1.8 D	05/93→05/01	537500 43 / 58	Bos		**2339602**	[–] 23396 18	Bosch	Luc		**91031200**	ø 180 x 32	Lucas
			Ate		**2182702**	[–] 21827 17.3	Teves	Ben		**91038100**	ø 228.6 x 42	Bendix ⊕ reinf. susp.
			Ate		**2143001**	[+] 21430 17.3	Teves	Ben		**91045200**	ø 180 x 32	Bendix
			Gir		**2312401**	[+] 23124 19.3	Lucas	Luc		**91048000**	ø 203.2 x 38	⊕ ABS 09/95→
			Ate		**82030600**		Teves	Ben		**97004700**		Bendix
			Ate		**82062900**			Luc		**97007600**		Lucas
			Luc		**82063300**			Ben		**97010000**		⊕ reinf. susp.
			Bos		**82063700**			Ben		**97010400**		⊕ ABS 09/95→
				PRO	**92043103**	ø 247 x 20.4 x 34.2	Teves	Luc		**84048001**	bore ø 20.6 ø 203.2 x 38	⊕ ABS 09/95→ →Orga 8729 →2000-10-01
				PRO	**92048103**	ø 266 x 20.5 x 27.4	Bosch, Lucas	Luc		**84048006**	bore ø 20.6 ø 203.2 x 38	Orga 8730→ 2000-10-02→
					TPM0012					**94010300**	ø 229,0 x 50.5	Bendix ⊕ reinf. susp.
										94014300	ø 180,0 x 44.5	
										94024900	ø 202 x 46.5	⊕ ABS 09/95→
1.9 D	04/93→05/99	537600 51 / 69	Bos		**2339602**	[–] 23396 18	Bosch	Luc		**91031200**	ø 180 x 32	Lucas
			Ate		**2182702**	[–] 21827 17.3	Teves	Ben		**91038100**	ø 228.6 x 42	Bendix ⊕ reinf. susp.
			Ate		**2143001**	[+] 21430 17.3	Teves	Ben		**91045200**	ø 180 x 32	Bendix
			Gir		**2312401**	[+] 23124 19.3	Lucas	Luc		**91048000**	ø 203.2 x 38	⊕ ABS 09/95→
			Ate		**82030600**		Teves	Ben		**97004700**		Bendix
			Ate		**82062900**			Luc		**97007600**		Lucas
			Luc		**82063300**			Ben		**97010000**		⊕ reinf. susp.
			Bos		**82063700**			Ben		**97010400**		⊕ ABS 09/95→
				PRO	**92043103**	ø 247 x 20.4 x 34.2	Teves	Luc		**84031202**	bore ø 20.6 ø 180 x 32	Lucas
				PRO	**92048103**	ø 266 x 20.5 x 27.4	Bosch, Lucas	Ben		**84045201**	bore ø 20.6 ø 180 x 32	Bendix
								Luc		**84048001**	bore ø 20.6 ø 203.2 x 38	⊕ ABS 09/95→
										94010300	ø 229,0 x 50.5	Bendix ⊕ reinf. susp.
										94014300	ø 180,0 x 44.5	
										94024900	ø 202 x 46.5	⊕ ABS 09/95→
1.9 D	05/93→05/01	537700 47 / 64	Ate		**2182702**	[–] 21827 17.3	Teves	Luc		**91031200**	ø 180 x 32	Lucas
1.9 D	06/94→05/01	50 / 68	Ate		**2143001**	[+] 21430 17.3	Teves	Ben		**91038100**	ø 228.6 x 42	Bendix ⊕ reinf. susp.
			Ate		**82030600**		Teves	Ben		**91045200**	ø 180 x 32	Bendix

N - P

306 Hatchback (7A, 7C, N3, N5) 04/93→12/02

537700													
1.9 D	05/93→05/01	47 / 64	Ate		82062900			Luc		91048000	ø 203.2 x 38	⊕ ABS 09/95→
1.9 D	06/94→05/01	50 / 68		PRO	92043103	ø 247 x 20.4 x 34.2	Teves	Ben		97004700		Bendix
					TPM0012			Luc		97007600		Lucas
								Ben		97010000		⊕ reinf. susp.
								Ben		97010400		⊕ ABS 09/95→
								Luc		84031202	bore ø 20.6 ø 180 x 32	Lucas
								Ben		84045201	bore ø 20.6 ø 180 x 32	Bendix
								Luc		84048001	bore ø 20.6 ø 203.2 x 38	⊕ ABS 09/95→ →Orga 8729 →2000-10-01
								Luc		84048006	bore ø 20.6 ø 203.2 x 38	Orga 8730→ 2000-10-02→
										94010300	ø 229,0 x 50.5	Bendix ⊕ reinf. susp.
										94014300	ø 180,0 x 44.5	
										94024900	ø 202 x 46.5	⊕ ABS 09/95→
537800													
1.9 D	03/98→05/01	55 / 75	Bos		2339602	[–] 23396 18	Bosch	Luc		91031200	ø 180 x 32	Lucas
			Ate		2182702	[–] 21827 17.3	Teves	Ben		91038100	ø 228.6 x 42	Bendix ⊕ reinf. susp.
			Gir		2312401	[+] 23124 19.3	Lucas	Ben		91045200	ø 180 x 32	Bendix
			Ate		82030600		Teves	Luc		91048000	ø 203.2 x 38	⊕ ABS
			Ate		82062900			Ben		97004700		Bendix
			Luc		82063300			Luc		97007600		Lucas
			Bos		82063700			Ben		97010000		⊕ reinf. susp.
				PRO	92043103	ø 247 x 20.4 x 34.2	Teves	Ben		97010400		⊕ ABS
				PRO	92048103	ø 266 x 20.5 x 27.4	Bosch, Lucas	Luc		84031202	bore ø 20.6 ø 180 x 32	Lucas
					TPM0012			Ben		84045201	bore ø 20.6 ø 180 x 32	Bendix
								Luc		84048001	bore ø 20.6 ø 203.2 x 38	⊕ ABS →Orga 8729 →2000-10-01
								Luc		84048006	bore ø 20.6 ø 203.2 x 38	⊕ ABS Orga 8730→ 2000-10-02→
										94010300	ø 229,0 x 50.5	Bendix ⊕ reinf. susp.
										94014300	ø 180,0 x 44.5	
										94024900	ø 202 x 46.5	⊕ ABS
537900													
1.9 D	09/98→05/01	51 / 69	Bos		2339602	[–] 23396 18	Bosch	Luc		91031200	ø 180 x 32	Lucas
			Ate		2182702	[–] 21827 17.3	Teves	Ben		91038100	ø 228.6 x 42	Bendix ⊕ reinf. susp.
			Gir		2312401	[+] 23124 19.3	Lucas	Ben		91045200	ø 180 x 32	Bendix
			Ate		82030600		Teves	Luc		91048000	ø 203.2 x 38	⊕ ABS
			Ate		82062900			Ben		97004700		Bendix
			Luc		82063300			Luc		97007600		Lucas
			Bos		82063700			Ben		97010000		⊕ reinf. susp.
				PRO	92043103	ø 247 x 20.4 x 34.2	Teves	Ben		97010400		⊕ ABS
				PRO	92048103	ø 266 x 20.5 x 27.4	Bosch, Lucas	Luc		84031202	bore ø 20.6 ø 180 x 32	Lucas
					TPM0012			Luc		84048001	bore ø 20.6 ø 203.2 x 38	⊕ ABS →Orga 8729 →2000-10-01
								Luc		84048006	bore ø 20.6 ø 203.2 x 38	Orga 8730→ 2000-10-02→
										94010300	ø 229,0 x 50.5	Bendix ⊕ reinf. susp.
										94014300	ø 180,0 x 44.5	

N - P

306 Hatchback (7A, 7C, N3, N5) 04/93→12/02

		kW / hp											
1.9 D	09/98→05/01	537900 51 / 69									94024900	ø 202 x 46.5	⊕ ABS
1.9 DT	05/93→05/01	538000 66 / 90	Ate		2182702	[–] 21827 17.3	Teves	Luc		91031200	ø 180 x 32	Lucas
			Ate		2143001	[+] 21430 17.3	Teves	Ben		91038100	ø 228.6 x 42	Bendix ⊕ reinf. susp.
			Ate		82030600		Teves	Ben		91045200	ø 180 x 32	Bendix
			Ate		82062900			Luc		91048000	ø 203.2 x 38	⊕ ABS 09/95→ 05/97→ ⊖ ABS
				PRO	92043103	ø 247 x 20.4 x 34.2	Teves	Ben		97004700		Bendix
				PRO	92048103	ø 266 x 20.5 x 27.4	Bosch, Lucas	Luc		97007600		Lucas
					TPM0012			Ben		97010000		⊕ reinf. susp.
								Ben		97010400		⊕ ABS 09/95→
								Ben		84045201	bore ø 20.6 ø 180 x 32	Bendix
								Luc		84048001	bore ø 20.6 ø 203.2 x 38	⊕ ABS 09/95→ →Orga 8729 →2000-10-01
								Luc		84048006	bore ø 20.6 ø 203.2 x 38	Orga 8730→ 2000-10-02→
										94010300	ø 229,0 x 50.5	Bendix ⊕ reinf. susp.
										94014300	ø 180,0 x 44.5	
										94024900	ø 202 x 46.5	⊕ ABS 09/95→
2.0 16V	03/97→06/00	538100 99 / 135	Bos		2339602	[–] 23396 18	Bosch	Ben		2097401	[o] 20974 11	⊕ rear disc brake
2.0 16V	03/97→05/01	97 / 132	Ate		2182702	[–] 21827 17.3	Teves	Ben		82029500		
			Ate		2143001	[+] 21430 17.3	Teves	Luc		91031200	ø 180 x 32	⊕ rear drum brake Lucas
			Gir		2312401	[+] 23124 19.3	Lucas	Ben		91038100	ø 228.6 x 42	⊕ rear drum brake Bendix ⊕ reinf. susp.
			Ate		82030600		Teves	Ben		91045200	ø 180 x 32	⊕ rear drum brake Bendix
			Ate		82062900			Luc		91048000	ø 203.2 x 38	⊕ rear drum brake ⊕ ABS
			Luc		82063300			Ben		97004700		⊕ rear drum brake Bendix
			Bos		82063700			Luc		97007600		⊕ rear drum brake Lucas
				PRO	92043103	ø 247 x 20.4 x 34.2	Teves	Ben		97010000		⊕ rear drum brake Bendix ⊕ reinf. susp.
				PRO	92048103	ø 266 x 20.5 x 27.4	Bosch, Lucas	Ben		97010400		⊕ rear drum brake ⊕ ABS
					TPM0012				PRO	92055003	ø 247 x 8 x 25.3	⊕ rear disc brake
										TPM0012		
										94010300	ø 229,0 x 50.5	⊕ rear drum brake Bendix ⊕ reinf. susp.
										94014300	ø 180,0 x 44.5	⊕ rear drum brake
2.0 HDI 90	06/99→05/01	538200 66 / 90	Bos		2339602	[–] 23396 18	Bosch	Ben		2097401	[o] 20974 11	⊕ rear disc brake
			Gir		2312401	[+] 23124 19.3	Lucas	Ben		82029500		⊕ rear disc brake
			Ate		82062900			Luc		91048000	ø 203.2 x 38	⊕ rear drum brake
			Luc		82063300			Bos		97010100		⊕ rear drum brake
			Bos		82063700				PRO	92055003	ø 247 x 8 x 25.3	⊕ rear disc brake
				PRO	92048103	ø 266 x 20.5 x 27.4				TPM0012		
					TPM0012					94024900	ø 202 x 46.5	⊕ rear drum brake
2.0 S16	05/93→05/01	538300 112 / 152	Gir		2312401	[+] 23124 19.3	32000001→	Ben		2097401	[o] 20974 11	⊕ rear disc brake
			Luc		2316901	[+] 23169 19.4	→32000000	Ben		82029500		
			Luc		82062800		→32000000	Luc		91048000	ø 203.2 x 38	⊕ rear drum brake ⊕ ABS 09/95→
			Luc		82063300		32000001→	Ben		97004700		⊕ rear drum brake Bendix

N - P

306 Hatchback (7A, 7C, N3, N5) 04/93→12/02

		kW / hp										
2.0 S16	05/93→05/01	538300 112 / 152		PRO	92048103	ø 266 x 20.5 x 27.4		Luc		97007600		⊕ rear drum brake Lucas
					TPM0012			Ben		97010000		⊕ rear drum brake ⊕ reinf. susp.
								Ben		97010400		⊕ rear drum brake ⊕ ABS 09/95→
								Luc		84048001	bore ø 20.6 ø 203.2 x 38	⊕ ABS 09/95→ →Orga 8729 →2000-10-01
								Luc		84048006	bore ø 20.6 ø 203.2 x 38	Orga 8730→ 2000-10-02→
									PRO	92055003	ø 247 x 8 x 25.3	
										TPM0012		
										94024900	ø 202 x 46.5	⊕ rear drum brake
2.0 S16	06/94→05/01	538400 110 / 150	Bos		2339602	[–] 23396 18		Ben		2097401	[o] 20974 11	⊕ rear disc brake
			Gir		2312401	[+] 23124 19.3	32000001→	Ben		82029500		
			Luc		2316901	[+] 23169 19.4	→32000000	Luc		91048000	ø 203.2 x 38	⊕ rear drum brake ⊕ ABS 09/95→
			Luc		82062800		→32000000	Ben		97004700		⊕ rear drum brake Bendix
			Luc		82063300		32000001→	Luc		97007600		⊕ rear drum brake Lucas
				PRO	92048103	ø 266 x 20.5 x 27.4		Ben		97010000		⊕ rear drum brake Bendix ⊕ reinf. susp.
					TPM0012			Ben		97010400		⊕ rear drum brake ⊕ ABS 09/95→
								Luc		84048001	bore ø 20.6 ø 203.2 x 38	⊕ ABS 09/95→ →Orga 8729 →2000-10-01
								Luc		84048006	bore ø 20.6 ø 203.2 x 38	Orga 8730→ 2000-10-02→
									PRO	92055003	ø 247 x 8 x 25.3	
										TPM0012		
										94010300	ø 229,0 x 50.5	⊕ rear drum brake Bendix ⊕ reinf. susp.
										94014300	ø 180,0 x 44.5	⊕ rear drum brake
2.0 S16	03/96→05/01	538500 120 / 163	Luc		2167403	[+] 21674 19.3		Ben		2097401	[o] 20974 11	⊕ rear disc brake
					92059600	ø 283 x 22 x 27		Ben		82029500		
					TPM0012				PRO	92055003	ø 247 x 8 x 25.3	
										TPM0012		
2.0 XSi	05/93→05/01	538600 89 / 121	Gir		2312401	[+] 23124 19.3	32000001→	Ben		2097401	[o] 20974 11	⊕ rear disc brake
			Luc		2316901	[+] 23169 19.4	→32000000	Ben		82029500		
			Luc		82062800		→32000000	Luc		91031200	ø 180 x 32	⊕ rear drum brake LUCAS
			Luc		82063300		32000001→	Ben		91038100	ø 228.6 x 42	⊕ rear drum brake Bendix ⊕ reinf. susp.
				PRO	92048103	ø 266 x 20.5 x 27.4		Ben		91045200	ø 180 x 32	⊕ rear drum brake Bendix
					TPM0012			Luc		91048000	ø 203.2 x 38	⊕ rear drum brake ⊕ ABS 09/95→
								Ben		97004700		⊕ rear drum brake Bendix
								Luc		97007600		⊕ rear drum brake Lucas
								Ben		97010000		⊕ rear drum brake ⊕ reinf. susp.
								Ben		97010400		⊕ rear drum brake ⊕ ABS 09/95→
								Luc		84031202	bore ø 20.6 ø 180 x 32	⊕ rear drum brake Lucas
								Ben		84045201	bore ø 20.6 ø 180 x 32	⊕ rear drum brake Bendix
								Luc		84048001	bore ø 20.6 ø 203.2 x 38	⊕ ABS 09/95→ →Orga 8729 →2000-10-01
								Luc		84048006	bore ø 20.6 ø 203.2 x 38	Orga 8730→ 2000-10-02→
									PRO	92055003	ø 247 x 8 x 25.3	⊕ rear disc brake

N - P

		kW / hp											
306 Hatchback (7A, 7C, N3, N5) 04/93→12/02													
2.0 XSi	05/93→05/01	538600 89 / 121								TPM0012		
										94010300	ø 229,0 x 50.5	⊕ rear drum brake Bendix ⊕ reinf. susp.
										94014300	ø 180,0 x 44.5	⊕ rear drum brake
										94024900	ø 202 x 46.5	
306 Saloon (7B, N3, N5) 06/94→10/04 → 306 (7B, N3, N5), Page 851													
306 Schrägheck (7A, 7C, N3, N5) 04/93→12/02 → 306 Hatchback (7A, 7C, N3, N5), Page 862													
306 Stufenheck (7B, N3, N5) 06/94→10/04 → 306 (7B, N3, N5), Page 851													
306 Van (N_, 7_) 02/94→08/02													
1.4	03/96→07/01	538700 55 / 75	Bos		2198004	[–] 21980 18	Bosch ⊖ ABS 32000001→	Luc		91031200	ø 180 x 32	Lucas
			Bos		2339602	[–] 23396 18	Bosch ⊕ ABS Orga 8576→ 2000-05-01→	Ben		91038100	ø 228.6 x 42	Bendix ⊕ reinf. susp.
			Ate		2182702	[–] 21827 17.3	Teves ⊕ ABS	Ben		91045200	ø 180 x 32	Bendix
			Ben		2090602	[o] 20906 18	Bendix ⊖ ABS →32000000	Luc		91048000	ø 203.2 x 38	⊕ ABS
			Ate		2143001	[+] 21430 17.3	Teves ⊕ ABS	Ben		97004700		Bendix
			Gir		2312401	[+] 23124 19.3	Lucas ⊕ ABS Orga 8576→ 2000-05-01→	Luc		97007600		Lucas
			Ben		2090604	[+] 20906 18	Bendix ⊖ ABS →32000000	Ben		97010000		Bendix ⊕ reinf. susp.
			Ben		82032200		→32000000 ⊖ ABS	Ben		97010400		⊕ ABS
			Ate		82030600		Teves ⊕ ABS	Luc		84031202	bore ø 20.6 ø 180 x 32	Lucas
			Ate		82062900		⊕ ABS	Ben		84045201	bore ø 20.6 ø 180 x 32	Bendix
			Bos		82063700			Luc		84048001	bore ø 20.6 ø 203.2 x 38	⊕ ABS →Orga 8729 →2000-10-01
				PRO	92029803	ø 247 x 10 x 34	Bosch ⊖ ABS	Luc		84048006	bore ø 20.6 ø 203.2 x 38	Orga 8730→ 2000-10-02→
				PRO	92043103	ø 247 x 20.4 x 34.2	Teves ⊕ ABS			94010300	ø 229,0 x 50.5	Bendix ⊕ reinf. susp.
				PRO	92048103	ø 266 x 20.5 x 27.4	Bosch, Lucas ⊕ ABS Orga 8576→ 2000-05-01→			94014300	ø 180,0 x 44.5	
										94024900	ø 202 x 46.5	⊕ ABS
1.8 D	05/97→06/00	538800 44 / 60	Ate		2143001	[+] 21430 17.3		Luc		91031200	ø 180 x 32	⊖ ABS
1.9 D	02/99→08/02	51 / 69	Ate		82030600			Luc		91048000	ø 203.2 x 38	⊕ ABS
				PRO	92043103	ø 247 x 20.4 x 34.2		Bos		91056600	ø 228.6 x 42	
					TPM0012					TPM0012		
										94010300	ø 229,0 x 50.5	Bendix
										94014300	ø 180,0 x 44.5	⊖ ABS Girling
										94024900	ø 202 x 46.5	⊕ ABS Girling
1.9 D	02/94→04/99	538900 69 / 94	Bos		2339602	[–] 23396 18	Bosch	Luc		91031200	ø 180 x 32	Lucas
			Ate		2182702	[–] 21827 17.3	Teves	Ben		91038100	ø 228.6 x 42	Bendix ⊕ reinf. susp.
			Ate		2143001	[+] 21430 17.3	Teves	Ben		91045200	ø 180 x 32	Bendix
			Gir		2312401	[+] 23124 19.3	Lucas	Luc		91048000	ø 203.2 x 38	⊕ ABS 09/95→
			Ate		82030600		Teves	Ben		97004700		Bendix
			Ate		82062900			Luc		97007600		Lucas
			Luc		82063300			Ben		97010000		⊕ reinf. susp.
			Bos		82063700			Ben		97010400		⊕ ABS 09/95→
				PRO	92043103	ø 247 x 20.4 x 34.2	Teves	Luc		84031202	bore ø 20.6 ø 180 x 32	Lucas
				PRO	92048103	ø 266 x 20.5 x 27.4	Bosch, Lucas	Ben		84045201	bore ø 20.6 ø 180 x 32	Bendix
								Luc		84048001	bore ø 20.6 ø 203.2 x 38	⊕ ABS 09/95→

N - P

		kW / hp									
306 Van (N_, 7_) 02/94→08/02											
538900											
1.9 D	02/94→04/99	69 / 94							94010300	ø 229,0 x 50.5	Bendix ⊕ reinf. susp.
									94014300	ø 180,0 x 44.5	
									94024900	ø 202 x 46.5	⊕ ABS 09/95→
539000			Bos		2339602	[–] 23396 18		Ben	2097401	[o] 20974 11	⊕ rear disc brake
2.0 HDi	08/98→06/00	66 / 90	Gir		2312401	[+] 23124 19.3		Luc	91048000	ø 203.2 x 38	⊕ rear drum brake
				PRO	92048103	ø 266 x 20.5 x 27.4			PRO 92055003	ø 247 x 8 x 25.3	⊕ rear disc brake
					TPM0012				TPM0012		
									94024900	ø 202 x 46.5	⊕ rear drum brake
307 (3A/C) 08/00→											
539100			Bos		2395401	[–] 23954 19		Luc	2355402	[–] 23554 17.2	Lucas
1.4	08/00→	55 / 75	Bos		82054200			Luc	2355481	[–] 23554 17.2	Lucas
1.4 HDi	10/01→	50 / 68	Bos		82063800			Bos	2415001	[–] 24150 17.6	Bosch Orga 9975→ 2004-02-29→
			Bos		82510100			Luc	82037300		
				PRO	92111503	ø 266 x 22 x 34		Bos	82054300		
					TPM0012			Luc	82062800		
									92133300	ø 249 x 9 x 67.2	Bosch →Orga 10897 →2006-09-09
									92202100	ø 249 x 9 x 69.2	Bosch Orga 10898→ 2006-09-10→
									PRO 92111703	ø 246.5 x 9 x 35	Lucas
									TPM0012		
539200			Bos		2360001	[–] 23600 19	⊕ ESP	Luc	2355402	[–] 23554 17.2	Lucas
1.4 16V	11/03→	65 / 88	Bos		2395401	[–] 23954 19	⊖ ESP	Luc	2355481	[–] 23554 17.2	Lucas
			Bos		82054200			Bos	2415001	[–] 24150 17.6	Bosch Orga 9975→ 2004-02-29→
			Bos		82063800			Luc	82037300		
			Bos		82510100			Bos	82054300		
				PRO	92111503	ø 266 x 22 x 34	⊖ ESP	Luc	82062800		
				PRO	92111603	ø 283 x 26 x 34	⊕ ESP		92133300	ø 249 x 9 x 67.2	Bosch →Orga 10897 →2006-09-09
					TPM0012				92202100	ø 249 x 9 x 69.2	Bosch Orga 10898→ 2006-09-10→
									PRO 92111703	ø 246.5 x 9 x 35	Lucas
									TPM0012		
539300			Bos		2360001	[–] 23600 19	→Orga 10550 ⊕ ESP	Luc	2355402	[–] 23554 17.2	→Orga 1205677
1.4 Flex	08/08→	59 / 80	Bos		2395401	[–] 23954 19	⊖ ESP Orga 10551→ ⊕ ESP	Luc	2355481	[–] 23554 17.2	→Orga 1205677
				PRO	92111503	ø 266 x 22 x 34	⊖ ESP Orga 10551→ ⊕ ESP	Bos	2473701	[–] 24737 18	Orga 1205777→
				PRO	92111603	ø 283 x 26 x 34	→Orga 10550 ⊕ ESP	Luc	82037300		→Orga 1205677
					TPM0012				PRO 92111703	ø 246.5 x 9 x 35	
									TPM0012		
539400			Bos		2360001	[–] 23600 19	⊕ ESP ⊕ man. ⊕ autom.	Luc	2355402	[–] 23554 17.2	Lucas
1.6	07/06→	81 / 110	Bos		2395401	[–] 23954 19	⊖ ESP	Luc	2355481	[–] 23554 17.2	Lucas
			Bos		82054200			Bos	2415001	[–] 24150 17.6	Bosch Orga 9975→ 2004-02-29→
			Bos		82063800			Luc	82037300		
			Bos		82510100			Bos	82054300		

		kW / hp									
307 (3A/C) 08/00→											
1.6	07/06→	539400 81 / 110		92111503	ø 266 x 22 x 34	⊖ ESP	Luc	82062800			
				92111603	ø 283 x 26 x 34	⊕ ESP ⊕ man. ⊕ autom.		92133300	ø 249 x 9 x 67.2	Bosch →Orga 10897 →2006-09-09	
								92202100	ø 249 x 9 x 69.2	Bosch Orga 10898→ 2006-09-10→	
								92111703	ø 246.5 x 9 x 35	Lucas	
1.6 16V	08/00→	539500 80 / 109	Bos	2360001	[–] 23600 19	⊕ autom. →Orga 9519 →2002-11-30 ⊕ man. Orga 9520→ 2002-12-01→ ⊕ man. ⊕ ESP	Luc	2355402	[–] 23554 17.2	Lucas	
							Luc	2355481	[–] 23554 17.2	Lucas	
			Bos	2395401	[–] 23954 19	Orga 9520→ 2002-12-01→ ⊕ man. ⊖ ESP	Bos	2415001	[–] 24150 17.6	Bosch Orga 9975→ 2004-02-29→	
			Bos	82054200			Luc	82037300			
			Bos	82063800			Bos	82054300			
			Bos	82510100			Luc	82062800			
				92111503	ø 266 x 22 x 34	Orga 9520→ 2002-12-01→ ⊖ ESP		92133300	ø 249 x 9 x 67.2	Bosch →Orga 10897 →2006-09-09	
				92111603	ø 283 x 26 x 34	⊕ autom. →Orga 9519 →2002-11-30 ⊕ man. Orga 9520→ 2002-12-01→ ⊕ man. ⊕ ESP		92202100	ø 249 x 9 x 69.2	Bosch Orga 10898→ 2006-09-10→	
								92111703	ø 246.5 x 9 x 35	Lucas	
				TPM0012				TPM0012			
1.6 BioFlex	09/07→	539600 80 / 109	Bos	2360001	[–] 23600 19	⊕ ESP ⊕ man. ⊕ autom.	Luc	2355402	[–] 23554 17.2	Lucas	
			Bos	2395401	[–] 23954 19	⊖ ESP	Luc	2355481	[–] 23554 17.2	Lucas	
			Bos	82054200			Bos	2415001	[–] 24150 17.6	Bosch Orga 9975→ 2004-02-29→	
			Bos	82063800			Luc	82037300			
			Bos	82510100			Bos	82054300			
				92111503	ø 266 x 22 x 34	⊖ ESP	Luc	82062800			
				92111603	ø 283 x 26 x 34	⊕ ESP ⊕ man. ⊕ autom.		92133300	ø 249 x 9 x 67.2	Bosch	
				TPM0012				92111703	ø 246.5 x 9 x 35		
								TPM0012			
1.6 Flex	07/06→	539700 83 / 113	Bos	2360001	[–] 23600 19	⊕ ESP ⊕ man. ⊕ autom.	Luc	2355402	[–] 23554 17.2	Lucas	
			Bos	2395401	[–] 23954 19	⊖ ESP	Luc	2355481	[–] 23554 17.2	Lucas	
			Bos	82054200			Bos	2415001	[–] 24150 17.6	Bosch Orga 9975→ 2004-02-29→	
				92111503	ø 266 x 22 x 34	⊖ ESP	Luc	82037300			
				92111603	ø 283 x 26 x 34	⊕ ESP ⊕ man. ⊕ autom.	Bos	82054300			
				TPM0012				92133300	ø 249 x 9 x 67.2	Bosch →Orga 10897 →2006-09-09	
								92202100	ø 249 x 9 x 69.2	Bosch Orga 10898→ 2006-09-10→	
								92111703	ø 246.5 x 9 x 35	Lucas	
								TPM0012			
1.6 HDi	04/05→	539800 66 / 90	Bos	2360001	[–] 23600 19	⊕ ESP ⊕ man. ⊕ autom.	Luc	2355402	[–] 23554 17.2	Lucas	
			Bos	2395401	[–] 23954 19	⊖ ESP	Luc	2355481	[–] 23554 17.2	Lucas	
			Bos	82054200			Bos	2415001	[–] 24150 17.6	Bosch Orga 9975→ 2004-02-29→	
			Bos	82063800			Luc	82037300			
			Bos	82510100			Bos	82054300			
				92111503	ø 266 x 22 x 34	⊖ ESP	Luc	82062800			
				92111603	ø 283 x 26 x 34	⊕ ESP ⊕ man. ⊕ autom.		92133300	ø 249 x 9 x 67.2	Bosch →Orga 10897 →2006-09-09	
				TPM0012				92202100	ø 249 x 9 x 69.2	Bosch Orga 10898→ 2006-09-10→	

→

		kW / hp											
307 (3A/C) 08/00→													
		539800											
1.6 HDi	04/05→	66 / 90								PRO	92111703	ø 246.5 x 9 x 35	Lucas
											TPM0012		
		539900	Bos		2360001	[–] 23600 19			Luc		2355402	[–] 23554 17.2	Lucas
1.6 HDi 110	02/04→	80 / 109	Bos		82054200				Luc	epad	2355481	[–] 23554 17.2	Lucas
2.0 16V	08/00→	100 / 136	Bos		82063800				Bos		2415001	[–] 24150 17.6	Bosch Orga 9975→ 2004-02-29→
2.0 16V	03/05→	103 / 140	Bos		82510100				Luc		82037300		
				PRO	92111603	ø 283 x 26 x 34			Bos		82054300		
					TPM0012				Luc		82062800		
										ABS	92133300	ø 249 x 9 x 67.2	Bosch →Orga 10897 →2006-09-09
										ABS	92202100	ø 249 x 9 x 69.2	Bosch Orga 10898→ 2006-09-10→
										PRO	92111703	ø 246.5 x 9 x 35	Lucas
											TPM0012		
		540000	Bos		2360001	[–] 23600 19			Luc		2355402	[–] 23554 17.2	
2.0	08/08→	105 / 143		PRO	92111603	ø 283 x 26 x 34			Luc	epad	2355481	[–] 23554 17.2	
					TPM0012				Bos		2415001	[–] 24150 17.6	
									Luc		82037300		
										ABS	92133300	ø 249 x 9 x 67.2	Orga 09975,09898→
										PRO	92111703	ø 246.5 x 9 x 35	→Orga 09974,09897
											TPM0012		
		540100	Ate		2358901	[–] 23589 19			Luc		2355402	[–] 23554 17.2	Lucas
2.0 16V	06/05→	130 / 177	Ate		82076800				Luc	epad	2355481	[–] 23554 17.2	Lucas
2.0 HDi 135	10/03→	100 / 136		PRO	92133203	ø 302 x 26 x 34.1			Bos		2415001	[–] 24150 17.6	Bosch Orga 9975→ 2004-02-29→
					TPM0012				Luc		82037300		
									Bos		82054300		
									Luc		82062800		
										ABS	92133300	ø 249 x 9 x 67.2	Bosch →Orga 10897 →2006-09-09
										ABS	92202100	ø 249 x 9 x 69.2	Bosch Orga 10898→ 2006-09-10→
										PRO	92111703	ø 246.5 x 9 x 35	Lucas
											TPM0012		
		540200	Bos		2360001	[–] 23600 19			Luc		2355402	[–] 23554 17.2	Lucas
2.0 Flex	08/08→	105 / 143	Bos		82054200				Luc	epad	2355481	[–] 23554 17.2	Lucas
			Bos		82063800				Bos		2415001	[–] 24150 17.6	Bosch Orga 9975→ 2004-02-29→
			Bos		82510100				Luc		82037300		
				PRO	92111603	ø 283 x 26 x 34			Bos		82054300		
									Luc		82062800		
										ABS	92133300	ø 249 x 9 x 67.2	Bosch
										PRO	92111703	ø 246.5 x 9 x 35	
		540300	Bos		2360001	[–] 23600 19	→Orga 12053		Luc		2355402	[–] 23554 17.2	→Orga 1205677
2.0 Flex	08/08→	111 / 151	Bos		2509401	[–] 25094 19	Orga 1205477→		Luc	epad	2355481	[–] 23554 17.2	→Orga 1205677
				PRO	92111603	ø 283 x 26 x 34			Bos		2473701	[–] 24737 18	Orga 1205777→

N - P

		kW / hp										
307 (3A/C) 08/00→												
540300												
2.0 Flex	08/08→	111 / 151		TPM0012			Luc	82037300			→Orga 1205677
								PRO 92111703	ø 246.5 x 9 x 35		
								TPM0012			
540400			Bos	2360001	[–] 23600 19	→Orga 9519 →2002-11-30 Orga 9520→ 2002-12-01→ ⊕ ESP	Luc	2355402	[–] 23554 17.2	Lucas
2.0 HDi 110	08/00→	79 / 107								
2.0 HDi 90	08/00→	66 / 90	Bos	2395401	[–] 23954 19	Orga 9520→ 2002-12-01→ ⊖ ESP	Luc	epad 2355481	[–] 23554 17.2	Lucas
			Bos	82054200			Bos	2415001	[–] 24150 17.6	Bosch Orga 9975→ 2004-02-29→
			Bos	82063800			Luc	82037300		
			Bos	82510100			Bos	82054300		
				PRO 92111503	ø 266 x 22 x 34	Orga 9520→ 2002-12-01→ ⊖ ESP	Luc	82062800		
				PRO 92111603	ø 283 x 26 x 34	→Orga 9519 →2002-11-30 Orga 9520→ 2002-12-01→ ⊕ ESP		ABS 92133300	ø 249 x 9 x 67.2	Bosch →Orga 10897 →2006-09-09
								ABS 92202100	ø 249 x 9 x 69.2	Bosch Orga 10898→ 2006-09-10→
				TPM0012				PRO 92111703	ø 246.5 x 9 x 35	Lucas
								TPM0012		
307 Break (3E) 03/02→09/03												
540500			Bos	2360001	[–] 23600 19	⊕ ESP	Luc	2355402	[–] 23554 17.2	Lucas
1.4	04/02→09/03	55 / 75	Bos	2395401	[–] 23954 19	⊖ ESP	Luc	epad 2355481	[–] 23554 17.2	Lucas
			Bos	82054200			Bos	2415001	[–] 24150 17.6	Bosch Orga 9975→ 2004-02-29→
			Bos	82063800			Luc	82037300		
			Bos	82510100			Bos	82054300		
				PRO 92111503	ø 266 x 22 x 34	⊖ ESP	Luc	82062800		
				PRO 92111603	ø 283 x 26 x 34	⊕ ESP		ABS 92133300	ø 249 x 9 x 67.2	Bosch →Orga 10897 →2006-09-09
								ABS 92202100	ø 249 x 9 x 69.2	Bosch Orga 10898→ 2006-09-10→
								PRO 92111703	ø 246.5 x 9 x 35	Lucas
540600			Bos	2360001	[–] 23600 19	⊕ ESP	Luc	2355402	[–] 23554 17.2	Lucas
1.4 16V	11/03→	65 / 88	Bos	2395401	[–] 23954 19	⊖ ESP	Luc	epad 2355481	[–] 23554 17.2	Lucas
			Bos	82054200			Bos	2415001	[–] 24150 17.6	Bosch Orga 9975→ 2004-02-29→
			Bos	82063800			Luc	82037300		
			Bos	82510100			Bos	82054300		
				PRO 92111503	ø 266 x 22 x 34	⊖ ESP	Luc	82062800		
				PRO 92111603	ø 283 x 26 x 34	⊕ ESP		ABS 92133300	ø 249 x 9 x 67.2	Bosch →Orga 10897 →09.09.2006
								ABS 92202100	ø 249 x 9 x 69.2	Bosch Orga 10898→ 2006-09-10→
				TPM0012				PRO 92111703	ø 246.5 x 9 x 35	Lucas
								TPM0012		
540700			Bos	2395401	[–] 23954 19		Luc	2355402	[–] 23554 17.2	Lucas
1.4 HDi	03/02→	50 / 68	Bos	82054200			Luc	epad 2355481	[–] 23554 17.2	Lucas
			Bos	82063800			Bos	2415001	[–] 24150 17.6	Bosch Orga 9975→ 2004-02-29→
			Bos	82510100			Luc	82037300		
				PRO 92111503	ø 266 x 22 x 34		Bos	82054300		
				TPM0012			Luc	82062800		
								ABS 92133300	ø 249 x 9 x 67.2	Bosch →Orga 10897 →2006-09-09

N - P

		kW / hp											
307 Break (3E) 03/02→09/03													
		540700											
1.4 HDi	03/02→	50 / 68								92202100	ø 249 x 9 x 69.2	Bosch Orga 10898→ 2006-09-10→	
										92111703	ø 246.5 x 9 x 35	Lucas	
										TPM0012			
		540800	Bos		2360001	[–] 23600 19			Luc	2355402	[–] 23554 17.2	Lucas	
1.6 16V	03/02→	80 / 109											
1.6 HDi	04/05→	66 / 90	Bos		82054200				Luc	2355481	[–] 23554 17.2	Lucas	
1.6 HDi 110	02/04→	80 / 109											
2.0	03/02→	100 / 136	Bos		82063800				Bos	2415001	[–] 24150 17.6	Bosch Orga 9975→ 2004-02-29→	
2.0 16V	03/05→	103 / 140											
2.0 HDI 110	03/02→	79 / 107	Bos		82510100				Luc	82037300			
2.0 HDI 90	03/02→	66 / 90							Bos	82054300			
					92111603	ø 283 x 26 x 34							
					TPM0012				Luc	82062800			
										92133300	ø 249 x 9 x 67.2	Bosch →Orga 10897 →2006-09-09	
										92202100	ø 249 x 9 x 69.2	Bosch Orga 10898→ 2006-09-10→	
										92111703	ø 246.5 x 9 x 35	Lucas	
										TPM0012			
		540900	Bos		2360001	[–] 23600 19			Luc	2355402	[–] 23554 17.2	Lucas	
1.6 BioFlex	09/07→	80 / 109											
			Bos		82054200				Luc	2355481	[–] 23554 17.2	Lucas	
			Bos		82063800				Bos	2415001	[–] 24150 17.6	Bosch Orga 9975→ 2004-02-29→	
			Bos		82510100				Luc	82037300			
					92111603	ø 283 x 26 x 34			Bos	82054300			
					TPM0012				Luc	82062800			
										92133300	ø 249 x 9 x 67.2	Bosch	
										92202100	ø 249 x 9 x 69.2		
										92111703	ø 246.5 x 9 x 35		
										TPM0012			
		541000	Ate		2358901	[–] 23589 19			Luc	2355402	[–] 23554 17.2	Lucas	
2.0 16V	06/05→	130 / 177											
2.0 HDi 135	02/04→	100 / 136	Ate		82076800				Luc	2355481	[–] 23554 17.2	Lucas	
					92133203	ø 302 x 26 x 34.1			Bos	2415001	[–] 24150 17.6	Bosch Orga 9975→ 2004-02-29→	
					TPM0012				Luc	82037300			
									Bos	82054300			
									Luc	82062800			
										92133300	ø 249 x 9 x 67.2	Bosch →Orga 10897 →2006-09-09	
										92202100	ø 249 x 9 x 69.2	Bosch Orga 10898→ 2006-09-10→	
										92111703	ø 246.5 x 9 x 35	Lucas	
										TPM0012			
307 CC (3B) 10/03→													
		541100	Bos		2360001	[–] 23600 19			Luc	2355402	[–] 23554 17.2	Lucas	
1.6 16V	02/05→	80 / 110											
2.0 16V	10/03→	100 / 136	Bos		82054200				Luc	2355481	[–] 23554 17.2	Lucas	
2.0 16V	03/05→	103 / 140											
			Bos		82063800				Bos	2415001	[–] 24150 17.6	Bosch Orga 9975→ 2004-02-29→	
			Bos		82510100				Luc	82037300			
					92111603	ø 283 x 26 x 34			Bos	82054300			
					TPM0012				Luc	82062800			

N - P

kW / hp											
307 CC (3B) 10/03→											
541100											
1.6 16V 02/05→ 80 / 110								92133300	ø 249 x 9 x 67.2	Bosch →Orga 10897 →2006-09-09	
2.0 16V 10/03→ 100 / 136								92202100	ø 249 x 9 x 69.2	Bosch Orga 10898→ 2006-09-10→	
2.0 16V 03/05→ 103 / 140								92111703	ø 246.5 x 9 x 35	Lucas	
								TPM0012			
541200	Ate		2358901	[–] 23589 19		Luc		2355402	[–] 23554 17.2	Lucas	
2.0 16V 10/03→ 130 / 177	Ate		82076800			Luc		2355481	[–] 23554 17.2	Lucas	
2.0 HDi 135 06/05→ 100 / 136			92133203	ø 302 x 26 x 34.1		Bos		2415001	[–] 24150 17.6	Bosch Orga 9975→ 2004-02-29→	
			TPM0012			Luc		82037300			
						Bos		82054300			
						Luc		82062800			
								92133300	ø 249 x 9 x 67.2	Bosch →Orga 10897 →2006-09-09	
								92202100	ø 249 x 9 x 69.2	Bosch Orga 10898→ 2006-09-10→	
								92111703	ø 246.5 x 9 x 35	Lucas	
								TPM0012			
541300	Bos		2360001	[–] 23600 19		Luc		2355402	[–] 23554 17.2		
2.0 Flex 01/05→ 109 / 148			92111603	ø 283 x 26 x 34		Luc		2355481	[–] 23554 17.2		
			TPM0012			Bos		2415001	[–] 24150 17.6		
						Luc		82037300			
								92133300	ø 249 x 9 x 67.2	Orga 09975,09898→	
								92111703	ø 246.5 x 9 x 35	→Orga 09974,09897	
								TPM0012			
307 Estate (3E) 03/02→09/03 → 307 Break (3E), Page 874											
307 Saloon 03/04→12/08											
541400	Bos		2360001	[–] 23600 19	⊕ ESP ⊕ man. ⊕ autom.	Luc		2355402	[–] 23554 17.2	Lucas	
1.6 08/06→ 81 / 110	Bos		2395401	[–] 23954 19	⊖ ESP	Luc		2355481	[–] 23554 17.2	Lucas	
	Bos		82054200			Bos		2415001	[–] 24150 17.6	Bosch Orga 9975→ 2004-02-29→	
	Bos		82063800			Luc		82037300			
	Bos		82510100			Bos		82054300			
			92111503	ø 266 x 22 x 34	⊖ ESP	Luc		82062800			
			92111603	ø 283 x 26 x 34	⊕ ESP ⊕ man. ⊕ autom.			92133300	ø 249 x 9 x 67.2	Bosch	
								92202100	ø 249 x 9 x 69.2		
								92111703	ø 246.5 x 9 x 35		
541500	Bos		2360001	[–] 23600 19	⊕ ESP ⊕ man. ⊕ autom.	Luc		2355402	[–] 23554 17.2	Lucas	
1.6 Flex 08/06→ 81 / 110	Bos		2395401	[–] 23954 19	⊖ ESP	Luc		2355481	[–] 23554 17.2	Lucas	
	Bos		82054200			Bos		2415001	[–] 24150 17.6	Bosch Orga 9975→ 2004-02-29→	
	Bos		82063800			Luc		82037300			
	Bos		82510100			Bos		82054300			
			92111503	ø 266 x 22 x 34	⊖ ESP	Luc		82062800			
			92111603	ø 283 x 26 x 34	⊕ ESP ⊕ man. ⊕ autom.			92133300	ø 249 x 9 x 67.2	Bosch →Orga 10897 →2006-09-09	
								92202100	ø 249 x 9 x 69.2	Bosch Orga 10898→ 2006-09-10→	

307 Saloon 03/04→12/08

		kW / hp											
1.6 Flex	08/06→	541500 81 / 110							PRO	92111703	ø 246.5 x 9 x 35		Lucas
1.6 Flex	08/06→	541600 83 / 113	Bos		2360001	[–] 23600 19	⊕ ESP ⊕ man. ⊕ autom.	Luc		2355402	[–] 23554 17.2		Lucas
			Bos		2395401	[–] 23954 19	⊖ ESP	Luc	epad	2355481	[–] 23554 17.2		Lucas
			Bos		82054200			Bos		2415001	[–] 24150 17.6		Bosch Orga 9975→ 2004-02-29→
				PRO	92111503	ø 266 x 22 x 34	⊖ ESP	Luc		82037300			
				PRO	92111603	ø 283 x 26 x 34	⊕ ESP ⊕ man. ⊕ autom.	Bos		82054300			
					TPM0012				ABS	92133300	ø 249 x 9 x 67.2		Bosch →Orga 10897 →2006-09-09
									ABS	92202100	ø 249 x 9 x 69.2		Bosch Orga 10898→ 2006-09-10→
									PRO	92111703	ø 246.5 x 9 x 35		Lucas
										TPM0012			
2.0	09/06→12/08	541700 103 / 140	Bos		2360001	[–] 23600 19		Luc		2355402	[–] 23554 17.2		
				PRO	92111603	ø 283 x 26 x 34		Luc	epad	2355481	[–] 23554 17.2		
					TPM0012			Luc		82037300			
									PRO	92111703	ø 246.5 x 9 x 35		
										TPM0012			
2.0 2.0 Flex 2.0 HDi	08/08→ 12/07→ 08/08→	541800 105 / 143 111 / 151 80 / 109	Bos		2360001	[–] 23600 19		Luc		2355402	[–] 23554 17.2		
				PRO	92111603	ø 283 x 26 x 34		Luc	epad	2355481	[–] 23554 17.2		
					TPM0012			Bos		2415001	[–] 24150 17.6		
								Luc		82037300			
									ABS	92133300	ø 249 x 9 x 67.2		Orga 09975,09898→
									PRO	92111703	ø 246.5 x 9 x 35		→Orga 09974,09897
										TPM0012			
2.0 Flex	08/08→	541900 105 / 143	Bos		2360001	[–] 23600 19		Luc		2355402	[–] 23554 17.2		Lucas
			Bos		82054200			Luc	epad	2355481	[–] 23554 17.2		Lucas
			Bos		82063800			Bos		2415001	[–] 24150 17.6		Bosch Orga 9975→ 2004-02-29→
			Bos		82510100			Luc		82037300			
				PRO	92111603	ø 283 x 26 x 34		Bos		82054300			
								Luc		82062800			
									ABS	92133300	ø 249 x 9 x 67.2		Bosch
									ABS	92202100	ø 249 x 9 x 69.2		
									PRO	92111703	ø 246.5 x 9 x 35		
2.0 HDi	03/04→	542000 66 / 90	Bos		2360001	[–] 23600 19	⊕ ESP	Luc		2355402	[–] 23554 17.2		LUCAS -brake
			Bos		2395401	[–] 23954 19	⊖ ESP	Luc	epad	2355481	[–] 23554 17.2		LUCAS -brake
				PRO	92111503	ø 266 x 22 x 34	⊖ ESP	Bos		2415001	[–] 24150 17.6		Orga 09975→ BOSCH -brake
				PRO	92111603	ø 283 x 26 x 34	⊕ ESP	Luc		82037300			
					TPM0012				ABS	92133300	ø 249 x 9 x 67.2		LUCAS -brake
									PRO	92111703	ø 246.5 x 9 x 35		BOSCH -brake
										TPM0012			

307 Stufenheck 03/04→12/08 → 307 Saloon, Page 876

30 kW / hp

307 SW (3H) 03/02→04/08

1.4	04/02→09/03	542100 55 / 75	Bos		2360001	[–] 23600 19	⊕ ESP	Luc		2355402	[–] 23554 17.2	Lucas
			Bos		2395401	[–] 23954 19	⊖ ESP	Luc	epad	2355481	[–] 23554 17.2	Lucas
			Bos		82054200			Bos		2415001	[–] 24150 17.6	Bosch Orga 9975→ 2004-02-29→
			Bos		82063800			Luc		82037300		
			Bos		82510100			Bos		82054300		
				PRO	92111503	ø 266 x 22 x 34	⊖ ESP	Luc		82062800		
				PRO	92111603	ø 283 x 26 x 34	⊕ ESP		ABS	92133300	ø 249 x 9 x 67.2	Bosch →Orga 10897 →2006-09-09
									ABS	92202100	ø 249 x 9 x 69.2	Bosch Orga 10898→ 2006-09-10→
									PRO	92111703	ø 246.5 x 9 x 35	Lucas
1.4 16V	11/03→	542200 65 / 88	Bos		2360001	[–] 23600 19	⊕ ESP	Luc		2355402	[–] 23554 17.2	Lucas
			Bos		2395401	[–] 23954 19	⊖ ESP	Luc	epad	2355481	[–] 23554 17.2	Lucas
			Bos		82054200			Bos		2415001	[–] 24150 17.6	Bosch Orga 9975→ 2004-02-29→
			Bos		82063800			Luc		82037300		
			Bos		82510100			Bos		82054300		
				PRO	92111503	ø 266 x 22 x 34	⊖ ESP	Luc		82062800		
				PRO	92111603	ø 283 x 26 x 34	⊕ ESP		ABS	92133300	ø 249 x 9 x 67.2	Bosch →Orga 10897 →2006-09-09
					TPM0012				ABS	92202100	ø 249 x 9 x 69.2	Bosch Orga 10898→ 2006-09-10→
									PRO	92111703	ø 246.5 x 9 x 35	Lucas
										TPM0012		
1.4 HDi 1.4 HDi 70	04/02→06/05 03/02→01/05	542300 51 / 69 50 / 68	Bos		2360001	[–] 23600 19		Luc		2355402	[–] 23554 17.2	
				PRO	92111503	ø 266 x 22 x 34		Luc	epad	2355481	[–] 23554 17.2	
					TPM0012			Bos		2415001	[–] 24150 17.6	
								Luc		82037300		
									ABS	92133300	ø 249 x 9 x 67.2	Orga 09975,09898→
									PRO	92111703	ø 246.5 x 9 x 35	→Orga 09974,09897
										TPM0012		
1.6 16V 1.6 HDI 110 2.0 16V 2.0 16V 2.0 HDI 110 2.0 HDI 90	03/02→ 02/04→ 03/02→ 03/05→ 03/02→ 03/02→	542400 80 / 109 80 / 109 100 / 136 103 / 140 79 / 107 66 / 90	Bos		2360001	[–] 23600 19		Luc		2355402	[–] 23554 17.2	Lucas
			Bos		82054200			Luc	epad	2355481	[–] 23554 17.2	Lucas
			Bos		82063800			Bos		2415001	[–] 24150 17.6	Bosch Orga 9975→ 2004-02-29→
			Bos		82510100			Luc		82037300		
				PRO	92111603	ø 283 x 26 x 34		Bos		82054300		
					TPM0012			Luc		82062800		
									ABS	92133300	ø 249 x 9 x 67.2	Bosch →Orga 10897 →2006-09-09
									ABS	92202100	ø 249 x 9 x 69.2	Bosch Orga 10898→ 2006-09-10→
									PRO	92111703	ø 246.5 x 9 x 35	Lucas
										TPM0012		
1.6 BioFlex 1.6 HDI 90	09/07→ 12/06→	542500 80 / 109 66 / 90	Bos		2360001	[–] 23600 19		Luc		2355402	[–] 23554 17.2	Lucas
			Bos		82054200			Luc	epad	2355481	[–] 23554 17.2	Lucas
			Bos		82063800			Bos		2415001	[–] 24150 17.6	Bosch Orga 9975→ 2004-02-29→
			Bos		82510100			Luc		82037300		

N - P

→

		kW / hp										
307 SW (3H) 03/02→04/08												
		542500			92111603	ø 283 x 26 x 34		Bos		82054300		
1.6 BioFlex	09/07→	80 / 109			TPM0012			Luc		82062800		
1.6 HDI 90	12/06→	66 / 90							ABS	92133300	ø 249 x 9 x 67.2	Bosch
									ABS	92202100	ø 249 x 9 x 69.2	
										92111703	ø 246.5 x 9 x 35	
										TPM0012		
		542600	Bos		2360001	[–] 23600 19		Luc		2355402	[–] 23554 17.2	
2.0 Flex	07/04→04/08	109 / 148			92111603	ø 283 x 26 x 34		Luc	epad	2355481	[–] 23554 17.2	
					TPM0012			Bos		2415001	[–] 24150 17.6	
								Luc		82037300		
									ABS	92133300	ø 249 x 9 x 67.2	Orga 09975,09898→
										92111703	ø 246.5 x 9 x 35	→Orga 09974,09897
										TPM0012		
		542700	Ate		2358901	[–] 23589 19		Luc		2355402	[–] 23554 17.2	Lucas
2.0 HDi 135	02/04→	100 / 136	Ate		82076800			Luc	epad	2355481	[–] 23554 17.2	Lucas
					92133203	ø 302 x 26 x 34.1		Bos		2415001	[–] 24150 17.6	Bosch Orga 9975→ 2004-02-29→
					TPM0012			Luc		82037300		
								Bos		82054300		
								Luc		82062800		
									ABS	92133300	ø 249 x 9 x 67.2	Bosch →Orga 10897 →2006-09-09
									ABS	92202100	ø 249 x 9 x 69.2	Bosch Orga 10898→ 2006-09-10→
										92111703	ø 246.5 x 9 x 35	Lucas
										TPM0012		
308 (4A_, 4C_) 09/07→												
		542800	Bos		2466001	[–] 24660 17.8		Luc		2355402	[–] 23554 17.2	
1.4 16V	09/07→	70 / 95										
1.4 16V	12/09→	72 / 98	Bos		82054200			Luc	epad	2355481	[–] 23554 17.2	
1.6 16V	09/07→	88 / 120										
1.6 16V	09/07→	103 / 140			92111603	ø 283 x 26 x 34		Luc		82037300		
1.6 16V	09/07→	110 / 150										
1.6 BioFlex	04/08→	80 / 109										
1.6 HDi	09/07→	66 / 90			TPM0012					92194100	ø 249 x 9 x 73.2	
1.6 HDi	09/07→	80 / 109										
1.6 HDi	12/09→	82 / 112								TPM0012		
		542900	Ate		2358901	[–] 23589 19		Luc		2355402	[–] 23554 17.2	
1.6	09/09→12/10	121 / 165										
2.0 Bioflex	01/12→	111 / 151	Ate		82032000			Luc	epad	2355481	[–] 23554 17.2	
2.0 HDi	04/12→	120 / 163										
					92168500	ø 302 x 26 x 34.2				92194100	ø 249 x 9 x 73.2	
					92168503	ø 302 x 26 x 34.2						
					TPM0012							
		543000	Ate		2358901	[–] 23589 19		Luc		2355402	[–] 23554 17.2	
1.6	01/12→	120 / 163										
1.6 16V	10/09→	115 / 156	Ate		82032000			Luc	epad	2355481	[–] 23554 17.2	
1.6 HDi	11/09→	68 / 92										
					92168500	ø 302 x 26 x 34.2		Luc		82037300		
					92168503	ø 302 x 26 x 34.2				92194100	ø 249 x 9 x 73.2	
					TPM0012					TPM0012		
		543100	Bos		2466001	[–] 24660 17.8		Luc		2355402	[–] 23554 17.2	
1.6	02/12→	85 / 115										
1.6 BioFlex	01/12→	90 / 122										
1.6 HDi	03/13→	84 / 114										

		kW / hp											
308 (4A_, 4C_) 09/07→													
		543100		PRO	**92111603**	ø 283 x 26 x 34		Luc	epad	**2355481**	[–] 23554 17.2	
1.6	02/12→	85 / 115										
1.6 BioFlex	01/12→	90 / 122			**TPM0012**					**92194100**	ø 249 x 9 x 73.2	
1.6 HDi	03/13→	84 / 114										
		543200	Ate		**2358901**	[–] 23589 19		Luc		**2355402**	[–] 23554 17.2	
1.6 16V	03/08→	128 / 174	Ate		**82032000**			Luc	epad	**2355481**	[–] 23554 17.2	
				PRO	**92111603**	ø 283 x 26 x 34		Luc		**82037300**		
					TPM0012					**92194100**	ø 249 x 9 x 73.2	
										TPM0012		
		543300	Ate		**2506901**	[+] 25069 17		Luc		**2476501**	[–] 24765 16.6	
1.6 GTi	07/10→	147 / 200		PRO	**92256903**	ø 340 x 30 x 34.3			ABS	**92168700**	ø 268 x 12 x 73.2	
					TPM0012					**TPM0012**		
		543400	Ate		**2358901**	[–] 23589 19	→Orga 11677 →2008-10-27	Luc		**2355402**	[–] 23554 17.2	
2.0 HDi	09/07→	100 / 136	Bos		**2466001**	[–] 24660 17.8	Orga 11678→ 2008-10-28→	Luc	epad	**2355481**	[–] 23554 17.2	
			Bos		**82054200**		Orga 11678→ 2008-10-28→	Luc		**82037300**		
			Ate		**82032000**		→Orga 11677 →2008-10-27			**92194100**	ø 249 x 9 x 73.2	
					92168500	ø 302 x 26 x 34.2	→Orga 11488 →2008-04-21			**TPM0012**		
				PRO	**92168503**	ø 302 x 26 x 34.2	→Orga 11488 →2008-04-21					
					TPM0012							
		543500	Ate		**2358901**	[–] 23589 19		Luc		**2476501**	[–] 24765 16.6	Ø 268 mm
2.0 HDi	07/10→	103 / 140	Ate		**82032000**			Luc		**2355402**	[–] 23554 17.2	Ø 249 mm
					92168500	ø 302 x 26 x 34.2		Luc	epad	**2355481**	[–] 23554 17.2	Ø 249 mm
				PRO	**92168503**	ø 302 x 26 x 34.2		Luc		**82037300**		Ø 249 mm
					TPM0012				ABS	**92168700**	ø 268 x 12 x 73.2	
										92194100	ø 249 x 9 x 73.2	
										TPM0012		
		543600	Ate		**2358901**	[–] 23589 19		Luc		**2476501**	[–] 24765 16.6	Ø 268 mm
2.0 HDi	10/11→	110 / 150	Ate		**82032000**			Luc		**2355402**	[–] 23554 17.2	Ø 249 mm
					92168500	ø 302 x 26 x 34.2		Luc	epad	**2355481**	[–] 23554 17.2	Ø 249 mm
				PRO	**92168503**	ø 302 x 26 x 34.2		Luc		**82037300**		Ø 249 mm
									ABS	**92168700**	ø 268 x 12 x 73.2	
										92194100	ø 249 x 9 x 73.2	
308 II 09/13→													
		543700	Man		**2525001**	[–] 25250 18.7	Ø 266 mm			**2583901**	[–] 25839 17.5	Ø 268 mm ⊕ elect. handbr.
1.2 THP 110	11/13→	81 / 110										
1.2 THP 130	11/13→	96 / 131		PRO	**92232303**	ø 304 x 28 x 48.1		Ate		**82503500**		⊖ elect. handbr.
1.6 HDi 120	11/13→	88 / 120			**TPM0012**					**TPM0012**		
2.0 HDi 150	11/13→	110 / 150										
		543800	Man		**2525001**	[–] 25250 18.7	Ø 266 mm			**2583901**	[–] 25839 17.5	Ø 268 mm ⊕ elect. handbr.
1.2 VTi 72	09/13→	60 / 82		PRO	**92232303**	ø 304 x 28 x 48.1		Ate		**82503500**		
					TPM0012					**TPM0012**		
		543900	Man		**2525001**	[–] 25250 18.7	Ø 266 mm			**2583901**	[–] 25839 17.5	Ø 268 mm ⊕ elect. handbr.
1.6	09/13→	92 / 125										
1.6	09/13→	115 / 156		PRO	**92232303**	ø 304 x 28 x 48.1		Ate		**82503500**		Ø 249 mm ⊕ W.I.prep.
1.6 HDi	09/13→	68 / 92										
1.6 HDi	09/13→	85 / 115			**TPM0012**					**TPM0012**		

		kW / hp										
308 II 09/13→												
		544000	Man		**2525001**	[–] 25250 18.7	Ø 266 mm			**2583901**	[–] 25839 17.5	Ø 268 mm ⊕ elect. handbr.
1.6 HDi 100	04/14→	73 / 99		PRO	**92232303**	ø 304 x 28 x 48.1	Ø 304 mm	Ate		**82503500**		⊖ elect. handbr.
					TPM0012					**TPM0012**		
308 CC 04/09→												
		544100	Ate		**2358901**	[–] 23589 19		Luc		**2355402**	[–] 23554 17.2	
1.6	07/09→	129 / 175	Ate		**82032000**		Orga 11578→	Luc	epad	**2355481**	[–] 23554 17.2	
			Ate		**82076800**		→Orga 11577			**92194100**	ø 249 x 9 x 73.2	
					92168500	ø 302 x 26 x 34.2						
				PRO	**92168503**	ø 302 x 26 x 34.2						
					TPM0012							
		544200	Ate		**2358901**	[–] 23589 19		Luc		**2355402**	[–] 23554 17.2	
1.6	09/10→	121 / 165	Ate		**82032000**			Luc	epad	**2355481**	[–] 23554 17.2	
					92168500	ø 302 x 26 x 34.2				**92194100**	ø 249 x 9 x 73.2	
				PRO	**92168503**	ø 302 x 26 x 34.2						
					TPM0012							
		544300	Bos		**2466001**	[–] 24660 17.8		Luc		**2355402**	[–] 23554 17.2	
1.6 16V	06/09→	88 / 120										
1.6 HDi	06/09→	82 / 112	Bos		**82054200**			Luc	epad	**2355481**	[–] 23554 17.2	
				PRO	**92111603**	ø 283 x 26 x 34		Luc		**82037300**		
					TPM0012					**92194100**	ø 249 x 9 x 73.2	
										TPM0012		
		544400	Ate		**2358901**	[–] 23589 19		Luc		**2355402**	[–] 23554 17.2	
1.6 16V	06/09→	103 / 140										
1.6 16V	06/09→	110 / 150	Ate		**82032000**			Luc	epad	**2355481**	[–] 23554 17.2	
				PRO	**92111603**	ø 283 x 26 x 34		Luc		**82037300**		
					TPM0012					**92194100**	ø 249 x 9 x 73.2	
										TPM0012		
		544500	Ate		**2358901**	[–] 23589 19		Luc		**2355402**	[–] 23554 17.2	
1.6 16V	06/09→	115 / 156										
2.0 HDi	04/09→	100 / 136	Ate		**82032000**			Luc	epad	**2355481**	[–] 23554 17.2	
2.0 HDi	04/09→	103 / 140										
2.0 HDi	06/09→	120 / 163			**92168500**	ø 302 x 26 x 34.2		Luc		**82037300**		
				PRO	**92168503**	ø 302 x 26 x 34.2				**92194100**	ø 249 x 9 x 73.2	
					TPM0012					**TPM0012**		
		544600	Bos		**2466001**	[–] 24660 17.8		Luc		**2355402**	[–] 23554 17.2	
1.6 HDi	03/13→	84 / 114		PRO	**92111603**	ø 283 x 26 x 34		Luc	epad	**2355481**	[–] 23554 17.2	
					TPM0012					**92194100**	ø 249 x 9 x 73.2	
		544700	Ate		**2506901**	[+] 25069 17		Luc		**2492201**	[–] 24922 17.3	
1.6 THP	10/10→	147 / 200	Ate		**82517900**				PRO	**92231303**	ø 290 x 12 x 35	
				PRO	**92256903**	ø 340 x 30 x 34.3				**TPM0012**		
					TPM0012							
308 SW II 03/14→												
		544800	Man		**2525001**	[–] 25250 18.7	Ø 266 mm			**2583901**	[–] 25839 17.5	Ø 268 mm ⊕ elect. handbr.
1.2 THP 110	03/14→	81 / 110										
1.6 HDi 100	04/14→	73 / 99		PRO	**92232303**	ø 304 x 28 x 48.1	Ø 304 mm	Ate		**82503500**		⊖ elect. handbr.
1.6 HDi 120	03/14→	88 / 120										

		kW / hp											
308 SW II 03/14→													
		544800			TPM0012						TPM0012		
1.2 THP 110	03/14→	81 / 110											
1.6 HDi 100	04/14→	73 / 99											
1.6 HDi 120	03/14→	88 / 120											
		544900	Man		2525001	[–] 25250 18.7	Mando				2583901	[–] 25839 17.5	Ø 268 mm ⊕ elect. handbr.
1.2 THP 130	03/14→	96 / 131		PRO	92232303	ø 304 x 28 x 48.1	Continental	Ate			82503500		⊖ elect. handbr.
1.6 HDi 115	03/14→	85 / 115											
1.6 HDi 92	03/14→	68 / 92											
1.6 THP 155	03/14→	115 / 156											
2.0 HDi 150	03/14→	110 / 150											
					TPM0012						TPM0012		
308 SW 09/07→													
		545000	Bos		2466001	[–] 24660 17.8		Luc			2355402	[–] 23554 17.2	
1.4 16V	09/07→	70 / 95	Bos		82054200			Luc	epad		2355481	[–] 23554 17.2	
				PRO	92111603	ø 283 x 26 x 34		Luc			82075400		
					TPM0012				ABS		92168700	ø 268 x 12 x 73.2	
											TPM0012		
		545100	Bos		2466001	[–] 24660 17.8		Luc			2355402	[–] 23554 17.2	
1.4 16V	12/09→	72 / 98	Bos		82054200			Luc	epad		2355481	[–] 23554 17.2	
2.0 Bioflex	01/08→	103 / 140		PRO	92111603	ø 283 x 26 x 34		Luc			82037300		
					TPM0012						92194100	ø 249 x 9 x 73.2	
											TPM0012		
		545200	Bos		2466001	[–] 24660 17.8		Luc			2476501	[–] 24765 16.6	
1.6 16V	09/07→	88 / 120											
1.6 16V	09/07→	110 / 150	Bos		82054200			Luc			82075400		
1.6 16V	03/08→	128 / 174											
1.6 16V	10/09→	115 / 156											
1.6 Bioflex	03/09→	82 / 112		PRO	92111603	ø 283 x 26 x 34			ABS		92168700	ø 268 x 12 x 73.2	
1.6 HDi	09/07→	66 / 90											
1.6 HDi	09/07→	80 / 109											
1.6 HDi	12/09→	82 / 112			TPM0012						TPM0012		
		545300	Bos		2466001	[–] 24660 17.8		Luc			2476501	[–] 24765 16.6	
1.6 16V	09/07→	103 / 140	Bos		82054200			Luc			82075400		
				PRO	92111603	ø 283 x 26 x 34			ABS		92168700	ø 268 x 12 x 73.2	
					TPM0012								
		545400	Bos		2466001	[–] 24660 17.8		Luc			2476501	[–] 24765 16.6	
1.6 HDi	11/09→	68 / 92	Bos		82054200			Luc			82075400		
				PRO	92111603	ø 283 x 26 x 34			ABS		92168700	ø 268 x 12 x 73.2	
		545500	Man		2525001	[–] 25250 18.7	Ø 266 mm				2583901	[–] 25839 17.5	Ø 268 mm ⊕ elect. handbr.
1.6 HDi	03/13→	84 / 114		PRO	92232303	ø 304 x 28 x 48.1		Ate			82503500		Ø 249 mm ⊕ W.I.prep.
					TPM0012						TPM0012		
		545600	Ate		2358901	[–] 23589 19		Luc			2476501	[–] 24765 16.6	Ø 268 mm
2.0 HDi	09/07→	100 / 136											
2.0 HDi	09/07→	103 / 140	Ate		82032000			Luc			2355402	[–] 23554 17.2	Ø 249 mm
2.0 HDi	06/09→	120 / 163											
					92168500	ø 302 x 26 x 34.2		Luc	epad		2355481	[–] 23554 17.2	Ø 249 mm
				PRO	92168503	ø 302 x 26 x 34.2		Luc			82037300		
					TPM0012			Luc			82075400		
									ABS		92168700	ø 268 x 12 x 73.2	
											92194100	ø 249 x 9 x 73.2	
											TPM0012		
		545700	Ate		2358901	[–] 23589 19		Luc			2355402	[–] 23554 17.2	
2.0 HDi	04/11→	110 / 150	Ate		82032000			Luc	epad		2355481	[–] 23554 17.2	
					92168500	ø 302 x 26 x 34.2					92194100	ø 249 x 9 x 73.2	

N - P

kW / hp										
308 SW 09/07→										
545700										
2.0 HDi 04/11→ 110 / 150		PRO	92168503	ø 302 x 26 x 34.2						
			TPM0012							
308 SW Estate 09/07→ → 308 SW, Page 882										
308 SW Kombi 09/07→ → 308 SW, Page 882										
405 (15B) 09/97→12/99 → 405 I (15B), Page 883										
405 (15B) 09/97→12/99 → 405 I (15B), Page 883										
405 I (15B) 09/97→12/99										
545800	Ben		2090506	[+] 20905 18	solid disc	Luc		2355401	[–] 23554 15.2	⊕ rear disc brake
2.0 09/97→12/99 116 / 158	Luc		2120909	[+] 21209 19.4	vented disc	Luc	epod	2355482	[–] 23554 15.2	⊕ rear disc brake
			92029900	ø 266 x 10 x 27		Luc		91011200	ø 228.6 x 42	⊕ rear drum brake
		PRO	92048103	ø 266 x 20.5 x 27.4	vented disc	Luc		91053900	ø 228.6 x 41.5	⊕ rear drum brake
			TPM0012			Luc		97012000		W 41.5 mm ⊕ rear drum brake
								92048200	ø 247 x 10 x 34	⊕ rear disc brake
								TPM0012		
								94010300	ø 229,0 x 50.5	⊕ rear drum brake
405 I Saloon (15B) 09/97→12/99 → 405 I (15B), Page 883										
405 I Stufenheck (15B) 09/97→12/99 → 405 I (15B), Page 883										
405 II (4B) 08/96→11/99										
545900	Ben		2090506	[+] 20905 18	solid disc	Luc		2355401	[–] 23554 15.2	⊕ rear disc brake
1.8 08/96→11/99 76 / 103	Luc		2120909	[+] 21209 19.4	vented disc	Luc	epod	2355482	[–] 23554 15.2	⊕ rear disc brake
1.9 D 08/97→11/99 52 / 71			92029900	ø 266 x 10 x 27				91030400	ø 228.6 x 41.5	⊕ ABS ⊕ rear drum brake
		PRO	92048103	ø 266 x 20.5 x 27.4		Ben		91038100	ø 228.6 x 42	⊖ ABS ⊕ rear drum brake
			TPM0012					92048200	ø 247 x 10 x 34	⊕ rear disc brake
								TPM0012		
								94010300	ø 229,0 x 50.5	⊕ rear drum brake
405 II Saloon (4B) 08/96→11/99 → 405 II (4B), Page 883										
405 II Stufenheck (4B) 08/96→11/99 → 405 II (4B), Page 883										
405 Mk II (4B) 08/96→11/99 → 405 II (4B), Page 883										
406 (8B) 11/95→12/05										
546000	Luc		2172402	[+] 21724 19.3		Ate		2127803	[–] 21278 17	⊕ rear disc brake
1.6 11/95→05/04 65 / 88	Luc		82063300			Ate		82039700		
1.8 05/97→05/04 66 / 90		PRO	92078603	ø 260 x 24 x 28.2				91052600	ø 228.6 x 42	⊕ rear drum brake
1.8 16V 11/95→10/00 81 / 110			TPM0012			Bos		97010100		
1.9 D 10/96→05/04 55 / 75								84052600	bore ø 20.6 ø 228.6 x 42	⊕ rear drum brake ⊖ ABS
								84052601	bore ø 20.6 ø 228.6 x 42	⊕ rear drum brake ⊕ ABS
							PRO	92080703	ø 290 x 10 x 60	
								TPM0012		
								94010300	ø 229,0 x 50.5	⊕ rear drum brake
								91054800	ø 180 x 30	
								97012500		
546100	Luc		2172402	[+] 21724 19.3		Ate		2127803	[–] 21278 17	⊕ rear disc brake
1.8 10/96→03/99 74 / 101	Luc		82063300			Ate		82039700		
		PRO	92078603	ø 260 x 24 x 28.2				91052600	ø 228.6 x 42	⊕ rear drum brake

		kW / hp											
406 (8B) 11/95→12/05													
1.8	10/96→03/99	546100 74 / 101							Bos		97010100		
											84052600	bore ø 20.6 ø 228.6 x 42	⊕ rear drum brake ⊖ ABS
											84052601	bore ø 20.6 ø 228.6 x 42	⊕ rear drum brake ⊕ ABS
										PRO	92080703	ø 290 x 10 x 60	
											94010300	ø 229,0 x 50.5	⊕ rear drum brake
											91054800	ø 180 x 30	
											97012500		
1.8 16V	10/00→05/04	546200 85 / 116	Luc		2172402	[+] 21724 19.3			Ate		2127803	[–] 21278 17	⊕ rear disc brake
			Luc		82063300				Ate		82039700		
				PRO	92078603	ø 260 x 24 x 28.2					91052600	ø 228.6 x 42	⊕ rear drum brake
					TPM0012				Bos		97010100		
										PRO	92080703	ø 290 x 10 x 60	
											TPM0012		
											94010300	ø 229,0 x 50.5	⊕ rear drum brake
											91054800	ø 180 x 30	
											97012500		
1.8 Bifuel	04/99→05/03	546300 81 / 110	Luc		2172402	[+] 21724 19.3			Ate		2127803	[–] 21278 17	⊕ rear disc brake
				PRO	92078603	ø 260 x 24 x 28.2			Ate		82039700		⊕ rear disc brake
					TPM0012						91052600	ø 228.6 x 42	⊕ rear drum brake
											84052600	bore ø 20.6 ø 228.6 x 42	⊕ rear drum brake ⊕ ABS
											84052601	bore ø 20.6 ø 228.6 x 42	⊕ rear drum brake ⊖ ABS
										PRO	92080703	ø 290 x 10 x 60	⊕ rear disc brake
											TPM0012		
											94010300	ø 229,0 x 50.5	⊕ rear drum brake
1.9 SL	09/97→03/99	546400 51 / 69	Luc		2172402	[+] 21724 19.3			Ate		2127803	[–] 21278 17	⊕ rear disc brake
				PRO	92078603	ø 260 x 24 x 28.2			Ate		82039700		⊕ rear disc brake
					TPM0012						91052600	ø 228.6 x 42	⊕ rear drum brake
										PRO	92080703	ø 290 x 10 x 60	⊕ rear disc brake
											TPM0012		
											94010300	ø 229,0 x 50.5	⊕ rear drum brake
1.9 TD	01/96→05/04	546500 66 / 90	Luc		2167403	[+] 21674 19.3			Ate		2127803	[–] 21278 17	⊕ rear disc brake
1.9 TD	01/96→05/04	68 / 92											
2.0 16V	11/95→05/04	97 / 132	Luc		82063300				Ate		82039700		
2.0 HDI 90	02/99→05/04	66 / 90		PRO	92078703	ø 283 x 26 x 28.2					91052600	ø 228.6 x 42	⊕ rear drum brake
					TPM0012				Bos		97010100		
											84052600	bore ø 20.6 ø 228.6 x 42	⊕ rear drum brake ⊖ ABS
											84052601	bore ø 20.6 ø 228.6 x 42	⊕ rear drum brake ⊕ ABS
										PRO	92080703	ø 290 x 10 x 60	
											TPM0012		
											94010300	ø 229,0 x 50.5	⊕ rear drum brake
											91054800	ø 180 x 30	

N - P

		kW / hp										
406 (8B) 11/95→12/05												
		546500								97012500		
1.9 TD	01/96→05/04	66 / 90										
1.9 TD	01/96→05/04	68 / 92										
2.0 16V	11/95→05/04	97 / 132										
2.0 HDI 90	02/99→05/04	66 / 90										
		546600	Luc	2167403	[+] 21674 19.3		Ate	2127803	[–] 21278 17	⊕ rear disc brake		
2.0	11/96→03/99	104 / 141	Luc	82063300			Ate	82039700		⊕ rear disc brake		
				92078703	ø 283 x 26 x 28.2			91052600	ø 228.6 x 42	⊕ rear drum brake		
								92080703	ø 290 x 10 x 60	⊕ rear disc brake		
								94010300	ø 229,0 x 50.5	⊕ rear drum brake		
								91054800	ø 180 x 30			
								97012500				
		546700	Luc	2167403	[+] 21674 19.3		Ate	2127803	[–] 21278 17	⊕ rear disc brake		
2.0	09/03→12/05	107 / 145		92078703	ø 283 x 26 x 28.2		Ate	82039700		⊕ rear disc brake		
				TPM0012				91052600	ø 228.6 x 42	⊕ rear drum brake		
								92080703	ø 290 x 10 x 60	⊕ rear disc brake		
								TPM0012				
								94010300	ø 229,0 x 50.5	⊕ rear drum brake		
		546800	Luc	2167403	[+] 21674 19.3		Ate	2127803	[–] 21278 17	⊕ rear disc brake		
2.0 16V	01/99→08/00	99 / 135	Luc	82063300			Ate	82039700				
2.1 TD 12V	01/96→05/04	80 / 109		92078703	ø 283 x 26 x 28.2			91052600	ø 228.6 x 42	⊕ rear drum brake		
				TPM0012			Bos	97010100				
								92080703	ø 290 x 10 x 60			
								TPM0012				
								94010300	ø 229,0 x 50.5	⊕ rear drum brake		
								91054800	ø 180 x 30			
								97012500				
		546900	Luc	2167403	[+] 21674 19.3		Ate	2127803	[–] 21278 17	⊕ rear disc brake		
2.0 16V	08/00→06/04	100 / 136										
2.0 16V HPi	05/01→05/04	103 / 140	Luc	82063300			Ate	82039700		⊕ rear disc brake		
2.0 HDi 110	08/01→05/04	79 / 107		92078703	ø 283 x 26 x 28.2			91052600	ø 228.6 x 42	⊕ rear drum brake		
2.0 HDI 110	06/98→08/01	80 / 109		TPM0012				92080703	ø 290 x 10 x 60	⊕ rear disc brake		
2.0 Turbo	04/96→05/04	108 / 147						TPM0012				
2.2	07/00→05/04	116 / 158						94010300	ø 229,0 x 50.5	⊕ rear drum brake		
2.2 HDi	03/00→05/04	98 / 133						91054800	ø 180 x 30			
3.0 24V	10/96→05/04	140 / 190						97012500				
3.0 V6	03/00→05/04	152 / 207										
		547000	Luc	2167403	[+] 21674 19.3		Ate	2127803	[–] 21278 17	⊕ ABS		
3.0	01/99→01/04	150 / 204		92078703	ø 283 x 26 x 28.2		Ate	82039700		⊕ ABS		
				TPM0012				91052600	ø 228.6 x 42	⊖ ABS		
								92080703	ø 290 x 10 x 60	⊕ ABS		
								TPM0012				
								94010300	ø 229,0 x 50.5	⊖ ABS		
406 Break (8E/F) 10/96→10/04												
		547100	Luc	2172402	[+] 21724 19.3		Ate	2127803	[–] 21278 17	⊕ rear disc brake		
1.8	10/96→03/99	74 / 101										

N - P

30 kW / hp										
406 Break (8E/F) 10/96→10/04										
547100		Luc		**82063300**			Ate		**82039700**	
1.8	10/96→03/99	74 / 101	PRO	**92078603**	ø 260 x 24 x 28.2				**91052600**	ø 228.6 x 42	⊕ rear drum brake
							Bos		**97010100**	
									84052600	bore ø 20.6 ø 228.6 x 42	⊕ rear drum brake ⊖ ABS
									84052601	bore ø 20.6 ø 228.6 x 42	⊕ rear drum brake ⊕ ABS
								PRO	**92080703**	ø 290 x 10 x 60	
									94010300	ø 229,0 x 50.5	⊕ rear drum brake
									91054800	ø 180 x 30	
									97012500		
547200		Luc		**2172402**	[+] 21724 19.3		Ate		**2127803**	[–] 21278 17	⊕ rear disc brake
1.8	05/97→10/04	66 / 90									
1.8 16V	10/96→10/00	81 / 110									
1.9 D	10/96→10/04	55 / 75	Luc	**82063300**			Ate		**82039700**	
			PRO	**92078603**	ø 260 x 24 x 28.2				**91052600**	ø 228.6 x 42	⊕ rear drum brake
				TPM0012			Bos		**97010100**	
									84052600	bore ø 20.6 ø 228.6 x 42	⊕ rear drum brake ⊖ ABS
									84052601	bore ø 20.6 ø 228.6 x 42	⊕ rear drum brake ⊕ ABS
								PRO	**92080703**	ø 290 x 10 x 60	
									TPM0012		
									94010300	ø 229,0 x 50.5	⊕ rear drum brake
									91054800	ø 180 x 30	
									97012500		
547300		Luc		**2172402**	[+] 21724 19.3		Ate		**2127803**	[–] 21278 17	⊕ rear disc brake
1.8 16V	10/00→10/04	85 / 116									
			Luc	**82063300**			Ate		**82039700**	
			PRO	**92078603**	ø 260 x 24 x 28.2				**91052600**	ø 228.6 x 42	⊕ rear drum brake
				TPM0012			Bos		**97010100**	
								PRO	**92080703**	ø 290 x 10 x 60	
									TPM0012		
									94010300	ø 229,0 x 50.5	⊕ rear drum brake
									91054800	ø 180 x 30	
									97012500		
547400		Luc		**2167403**	[+] 21674 19.3		Ate		**2127803**	[–] 21278 17	⊕ rear disc brake
1.9 TD	10/96→10/04	66 / 90									
2.0 HDI 90	02/99→10/04	66 / 90	Luc	**82063300**			Ate		**82039700**	
			PRO	**92078703**	ø 283 x 26 x 28.2				**91052600**	ø 228.6 x 42	⊕ rear drum brake
				TPM0012			Bos		**97010100**	
									84052600	bore ø 20.6 ø 228.6 x 42	⊕ rear drum brake ⊖ ABS
									84052601	bore ø 20.6 ø 228.6 x 42	⊕ rear drum brake ⊕ ABS
								PRO	**92080703**	ø 290 x 10 x 60	
									TPM0012		
									94010300	ø 229,0 x 50.5	⊕ rear drum brake
									91054800	ø 180 x 30	
									97012500		

N - P

30 kW / hp

406 Break (8E/F) 10/96→10/04

2.0	11/96→03/99	547500 104 / 141	Luc		2167403	[+] 21674 19.3		Ate		2127803	[–] 21278 17	⊕ rear disc brake
			Luc		82063300			Ate		82039700		⊕ rear disc brake
				PRO	92078703	ø 283 x 26 x 28.2				91052600	ø 228.6 x 42	⊕ rear drum brake
									PRO	92080703	ø 290 x 10 x 60	⊕ rear disc brake
										94010300	ø 229,0 x 50.5	⊕ rear drum brake
										91054800	ø 180 x 30	
										97012500		
2.0 16V	10/96→10/04	547600 97 / 132	Luc		2167403	[+] 21674 19.3		Ate		2127803	[–] 21278 17	⊕ rear disc brake
2.0 16V	01/99→10/00	99 / 135	Luc		82063300			Ate		82039700		
2.1 TD 12V	10/96→10/04	80 / 109		PRO	92078703	ø 283 x 26 x 28.2				91052600	ø 228.6 x 42	⊕ rear drum brake
					TPM0012			Bos		97010100		
									PRO	92080703	ø 290 x 10 x 60	
										TPM0012		
										94010300	ø 229,0 x 50.5	⊕ rear drum brake
										91054800	ø 180 x 30	
										97012500		
2.0 16V	10/00→10/04	547700 100 / 136	Luc		2167403	[+] 21674 19.3		Ate		2127803	[–] 21278 17	⊕ rear disc brake
2.0 16V HPi	05/01→10/04	103 / 140	Luc		82063300			Ate		82039700		⊕ rear disc brake
2.0 HDi 110	08/01→10/04	79 / 107		PRO	92078703	ø 283 x 26 x 28.2				91052600	ø 228.6 x 42	⊕ rear drum brake
2.0 Turbo	10/96→10/04	108 / 147			TPM0012				PRO	92080703	ø 290 x 10 x 60	⊕ rear disc brake
2.2	07/00→10/04	116 / 158								TPM0012		
2.2 HDI	03/00→10/04	98 / 133								94010300	ø 229,0 x 50.5	⊕ rear drum brake
3.0 24V	10/96→10/04	140 / 190								91054800	ø 180 x 30	
3.0 V6	03/00→10/04	152 / 207								97012500		
2.0 HDI 110	02/99→04/04	547800 80 / 109	Luc		2167403	[+] 21674 19.3		Ate		2127803	[–] 21278 17	⊕ rear disc brake
			Luc		82063300			Ate		82039700		⊕ rear disc brake
					92144800	ø 314 x 24 x 45				91052600	ø 228.6 x 42	⊕ rear drum brake
				PRO	92078703	ø 283 x 26 x 28.2			PRO	92080703	ø 290 x 10 x 60	⊕ rear disc brake
					TPM0012					TPM0012		
										94010300	ø 229,0 x 50.5	⊕ rear drum brake
										91054800	ø 180 x 30	
										97012500		

406 Coupe (8C) 03/97→12/04

1.8	10/97→03/99	547900 82 / 112	Luc		2167403	[+] 21674 19.3		Ate		2127803	[–] 21278 17	⊕ rear disc brake
			Luc		82063300			Ate		82039700		⊕ rear disc brake
				PRO	92078703	ø 283 x 26 x 28.2				91052600	ø 228.6 x 42	⊕ rear drum brake
									PRO	92080703	ø 290 x 10 x 60	⊕ rear disc brake
										94010300	ø 229,0 x 50.5	⊕ rear drum brake
										91054800	ø 180 x 30	
										97012500		

N - P

kW / hp												
406 Coupe (8C) 03/97→12/04												
548000												
2.0 16V 03/97→12/04 97 / 132	Luc		2167403	[+] 21674 19.3		Ate		2127803	[–] 21278 17	⊕ rear disc brake
2.0 16V 01/99→10/00 99 / 135	Luc		82063300			Ate		82039700		⊕ rear disc brake
2.0 16V 10/00→12/04 100 / 136		PRO	92078703	ø 283 x 26 x 28.2				91052600	ø 228.6 x 42	⊕ rear drum brake
2.2 03/02→12/04 116 / 158			TPM0012				PRO	92080703	ø 290 x 10 x 60	⊕ rear disc brake
								TPM0012		
								94010300	ø 229,0 x 50.5	⊕ rear drum brake
								91054800	ø 180 x 30	
								97012500		
548100										
2.0 16V 04/99→09/04 99 / 135	Luc		2167403	[+] 21674 19.3		Ate		2127803	[–] 21278 17	⊕ rear disc brake
		PRO	92078703	ø 283 x 26 x 28.2		Ate		2127801	[+] 21278 17	⊕ rear disc brake
			TPM0012			Ate		82039700		⊕ rear disc brake
								91052600	ø 228.6 x 42	⊕ rear drum brake
							PRO	92080703	ø 290 x 10 x 60	⊕ rear disc brake
								TPM0012		
								94010300	ø 229,0 x 50.5	⊕ rear drum brake
548200										
2.2 HDI 03/00→12/04 98 / 133	Luc		2167403	[+] 21674 19.3	→S 80 800 000 Orga 9338→ 2002-06-02→	Ate		2127803	[–] 21278 17	⊕ rear disc brake
	Bre		2375301	[+] 23753 18	Brembo S 80 800 001→ →Orga 9337 →2002-06-01	Ate		82039700		⊕ rear disc brake
	Luc		82063300		→S 80 800 000			91052600	ø 228.6 x 42	⊕ rear drum brake
		PRO	92078703	ø 283 x 26 x 28.2	Orga 9338→ 2002-06-02→ Lucas		PRO	92080703	ø 290 x 10 x 60	Teves 80 012 041→ ⊕ rear disc brake
		PRO	92097103	ø 305 x 28 x 28	Brembo S 80 800 001→ →Orga 9337 →2002-06-01			TPM0012		
			TPM0012					94010300	ø 229,0 x 50.5	⊕ rear drum brake
								91054800	ø 180 x 30	
								97012500		
548300										
3.0 09/00→12/02 150 / 204	Bre		2375301	[+] 23753 18		Ate		2127803	[–] 21278 17	⊕ rear disc brake
		PRO	92097103	ø 305 x 28 x 28		Ate		82039700		⊕ rear disc brake
			TPM0012					91052600	ø 228.6 x 42	⊕ rear drum brake
							PRO	92080703	ø 290 x 10 x 60	⊕ rear disc brake
								TPM0012		
								94010300	ø 229,0 x 50.5	⊕ rear drum brake
548400										
3.0 V6 03/00→12/04 152 / 207	Luc		2167403	[+] 21674 19.3	Orga 9639→ 2003-03-30→	Ate		2127803	[–] 21278 17	⊕ rear disc brake
3.0 V6 24V 03/97→12/04 140 / 190	Bre		2375301	[+] 23753 18	→Orga 9638 →2003-03-29	Ate		82039700		⊕ rear disc brake
	Luc		82063300					91052600	ø 228.6 x 42	⊕ rear drum brake
		PRO	92078703	ø 283 x 26 x 28.2	Orga 9639→ 2003-03-30→		PRO	92080703	ø 290 x 10 x 60	⊕ rear disc brake
		PRO	92097103	ø 305 x 28 x 28	→Orga 9638 →2003-03-29			TPM0012		
			TPM0012					94010300	ø 229,0 x 50.5	⊕ rear drum brake
								91054800	ø 180 x 30	
								97012500		

406 Estate (8E/F) 10/96→10/04 → 406 Break (8E/F), Page 885

406 Saloon (8B) 11/95→12/05 → 406 (8B), Page 883

406 Stufenheck (8B) 11/95→12/05 → 406 (8B), Page 883

30 kW / hp

407 (6D_) 05/04→02/11

		548500	Luc		2417501	[+] 24175 18.7		Luc		2413501	[–] 24135 17.8	
1.6 HDi 110	05/04→	80 / 109	TRW		2532801	[+] 25328 18.7	Orga 11921→ 2009-06-28→	Luc		82075400		
1.8	05/04→	85 / 116	Luc		82063500			Luc		82063300		
1.8 16V	09/05→	92 / 125		PRO	92232503	ø 283 x 26 x 48			PRO	92129603	ø 290 x 12 x 35	
2.0	05/04→	100 / 136			TPM0012					TPM0012		
2.0 16V	09/05→	103 / 140										
		548600	Luc		2417501	[+] 24175 18.7		Luc		2413501	[–] 24135 17.8	
2.0 Bioflex	09/07→	103 / 140	TRW		2532801	[+] 25328 18.7	Orga 11921→ 2009-06-28→	Luc		82075400		
			Luc		82063500			Luc		82063300		
				PRO	92232503	ø 283 x 26 x 48			PRO	92129603	ø 290 x 12 x 35	
		548700		PRO	92232503	ø 283 x 26 x 48		Luc		2413501	[–] 24135 17.8	
2.0 Flex	10/05→02/11	103 / 140			TPM0012				PRO	92129603	ø 290 x 12 x 35	
										TPM0012		
		548800	Luc		2417501	[+] 24175 18.7	⊖D	Luc		2413501	[–] 24135 17.8	
2.0 HDi	08/08→	103 / 140	TRW		2532801	[+] 25328 18.7	Orga 11921→ 2009-06-28→ ⊖D	Luc		82075400		
2.0 HDi 135	05/04→	100 / 136	Ate		2433201	[+] 24332 18.8	Orga 11683→ 2008-11-02→ ⊕D	Luc		82063300		
			Ate		82032000		Orga 11683→ 2008-11-02→ ⊕D		PRO	92129603	ø 290 x 12 x 35	
			Ate		82062900		Orga 11683→ 2008-11-02→ ⊕D			TPM0012		
			Luc		82063500							
			Ate		82517900		Orga 11683→ 2008-11-02→ ⊕D					
				PRO	92129503	ø 330 x 30 x 48	Orga 11683→ 2008-11-02→					
				PRO	92232503	ø 283 x 26 x 48	→Orga 11682 →2008-11-01					
					TPM0012							
		548900	Ate		2433201	[+] 24332 18.8		Luc		2413501	[–] 24135 17.8	
2.0 HDi	07/09→	120 / 163	Ate		82032000			Luc		82075400		
2.0 HDi	02/10→	110 / 150	Ate		82062900			Luc		82063300		
			Ate		82517900				PRO	92129603	ø 290 x 12 x 35	
				PRO	92232303	ø 304 x 28 x 48.1				TPM0012		
					TPM0012							
		549000	Luc		2413301	[+] 24133 17.7	→Orga 11920 →2009-06-27	Luc		2413501	[–] 24135 17.8	
2.2	05/04→	116 / 158	Luc		2413303	[+] 24133 18.3	Orga 11921→ 2009-06-28→	Luc		82075400		
2.2 16V	09/05→	120 / 163	Luc		82506000		→Orga 11193 →2007-07-01	Luc		82063300		
2.2 HDi 170	05/06→	125 / 170		PRO	92129503	ø 330 x 30 x 48			PRO	92129603	ø 290 x 12 x 35	
					TPM0012					TPM0012		
		549100	Luc		2413303	[+] 24133 18.3		Luc		2413501	[–] 24135 17.8	
2.2 HDi	06/08→	120 / 163	Luc		82506000			Luc		82075400		
				PRO	92129503	ø 330 x 30 x 48		Luc		82063300		
					TPM0012				PRO	92129603	ø 290 x 12 x 35	
										TPM0012		
		549200	Luc		2413301	[+] 24133 17.7	→Orga 11920 →2009-06-27	Luc		2413501	[–] 24135 17.8	
2.7 HDi	10/05→	150 / 204	Luc		2413303	[+] 24133 18.3	Orga 11921→ 2009-06-28→ →Orga 12410 →2010-20-31	Luc		82075400		

N - P

		kW / hp										
407 (6D_) 05/04→02/11												
549200			Ate		**2506901**	[+] 25069 17	Orga 12411→ 2010-11-01→	Luc		**82063300**		
2.7 HDi	10/05→	150 / 204	Luc		**82506000**				PRO	**92129603**	ø 290 x 12 x 35	
			Luc		**82063300**					**TPM0012**		
			Ate		**82517900**		Orga 12411→ 2010-11-01→					
				PRO	**92129503**	ø 330 x 30 x 48	→Orga 12410 →2010-10.31					
				PRO	**92256003**	ø 340 x 30 x 48	Orga 12411→ 2010-11-01→					
549300			Luc		**2413301**	[+] 24133 17.7	→Orga 11920 →2009-06-27	Luc		**2413501**	[–] 24135 17.8	
3.0	05/04→	155 / 211	Luc		**2413303**	[+] 24133 18.3	Orga 11921→ 2009-06-28→ →Orga 12410 →2010-20-31	Luc		**82075400**		
			Ate		**2506901**	[+] 25069 17	Orga 12411→ 2010-11-01→	Luc		**82063300**		
			Luc		**82506000**				PRO	**92129603**	ø 290 x 12 x 35	
			Luc		**82063300**					**TPM0012**		
			Ate		**82517900**		Orga 12411→ 2010-11-01→					
				PRO	**92129503**	ø 330 x 30 x 48	→Orga 12410 →2010-10.31					
				PRO	**92256003**	ø 340 x 30 x 48	Orga 12411→ 2010-11-01→					
					TPM0012							
407 Coupe (6C_) 10/05→12/09												
549400			Ate		**2433201**	[+] 24332 18.8		Luc		**2413501**	[–] 24135 17.8	
2.0 HDi	10/05→	100 / 136	Ate		**82032000**			Luc		**82075400**		
2.0 HDi	06/09→	120 / 163	Ate		**82062900**			Luc		**82063300**		
2.0 HDi	02/10→	110 / 150	Ate		**82517900**				PRO	**92195803**	ø 290 x 12 x 50	
					92157000	ø 304 x 28 x 48				**TPM0012**		
					TPM0012							
549500			Luc		**2413301**	[+] 24133 17.7		Luc		**2413501**	[–] 24135 17.8	
2.0 HDi	09/08→12/09	103 / 140	Luc		**2413303**	[+] 24133 18.3			PRO	**92195803**	ø 290 x 12 x 50	
				PRO	**92129503**	ø 330 x 30 x 48				**TPM0012**		
					TPM0012							
549600			Luc		**2413301**	[+] 24133 17.7	→Orga 11920 →2009-06-27	Luc		**2413501**	[–] 24135 17.8	
2.2 16V	10/05→	120 / 163	Luc		**2413303**	[+] 24133 18.3	Orga 11921→ 2009-06-28→	Luc		**82075400**		
			Luc		**82506000**		→Orga 11193 →2007-07-01	Luc		**82063300**		
				PRO	**92129503**	ø 330 x 30 x 48			PRO	**92195803**	ø 290 x 12 x 50	
					TPM0012					**TPM0012**		
549700			Luc		**2413301**	[+] 24133 17.7	→Orga 11920 →2009-06-27	Luc		**2413501**	[–] 24135 17.8	
2.7 HDi	10/05→	150 / 204	Luc		**2413303**	[+] 24133 18.3	Orga 11921→ 2009-06-28→ →Orga 12410 →2010-20-31	Luc		**82075400**		
3.0 HDi	06/09→	177 / 241	Ate		**2506901**	[+] 25069 17	Orga 12411→ 2010-11-01→	Luc		**82063300**		
3.0 V6	10/05→	155 / 211	Luc		**82506000**				PRO	**92195803**	ø 290 x 12 x 50	
			Luc		**82063300**					**TPM0012**		
			Ate		**82517900**		Orga 12411→ 2010-11-01→					
				PRO	**92129503**	ø 330 x 30 x 48	→Orga 12410 →2010-10.31					
				PRO	**92256003**	ø 340 x 30 x 48	Orga 12411→ 2010-11-01→					
					TPM0012							

30 kW / hp

407 Saloon (6D_) 05/04→02/11 → 407 (6D_), Page 889

407 Stufenheck (6D_) 05/04→02/11 → 407 (6D_), Page 889

407 SW (6E_) 05/04→

549800

1.6 HDi 110	05/04→	80 / 109
1.8	05/04→	85 / 116
1.8 16V	09/05→	92 / 125
2.0	05/04→	100 / 136
2.0 16V	09/05→	103 / 140
2.0 Bioflex	01/08→	103 / 140

Luc	2417501	[+] 24175 18.7		Luc	2413501	[–] 24135 17.8	
TRW	2532801	[+] 25328 18.7	Orga 11921→ 2009-06-28→	Luc	82075400		
Luc	82063500			Luc	82063300		
PRO	92232503	ø 283 x 26 x 48		PRO	92129603	ø 290 x 12 x 35	
	TPM0012				TPM0012		

549900

2.0 HDi	08/08→	103 / 140
2.0 HDi 135	05/04→	100 / 136

Luc	2417501	[+] 24175 18.7	⊖ D	Luc	2413501	[–] 24135 17.8	
TRW	2532801	[+] 25328 18.7	Orga 11921→ 2009-06-28→ ⊖ D	Luc	82075400		
Ate	2433201	[+] 24332 18.8	Orga 11683→ 2008-11-02→ ⊕ D	Luc	82063300		
Ate	82032000		Orga 11683→ 2008-11-02→ ⊕ D	PRO	92129603	ø 290 x 12 x 35	
Ate	82062900		Orga 11683→ 2008-11-02→ ⊕ D		TPM0012		
Luc	82063500						
Ate	82517900		Orga 11683→ 2008-11-02→ ⊕ D				
PRO	92129503	ø 330 x 30 x 48	Orga 11683→ 2008-11-02→				
PRO	92232503	ø 283 x 26 x 48	→Orga 11682 →2008-11-01				
	TPM0012						

550000

2.0 HDi	07/09→	120 / 163
2.0 HDi	02/10→	110 / 150

Ate	2433201	[+] 24332 18.8		Luc	2413501	[–] 24135 17.8	
Ate	82032000			Luc	82075400		
Ate	82062900			Luc	82063300		
Ate	82517900			PRO	92129603	ø 290 x 12 x 35	
PRO	92232303	ø 304 x 28 x 48.1			TPM0012		
	TPM0012						

550100

2.2	05/04→	116 / 158
2.2 16V	09/05→	120 / 163
2.2 HDi 170	05/06→	125 / 170

Luc	2413301	[+] 24133 17.7	→Orga 11920 →2009-06-27	Luc	2413501	[–] 24135 17.8	
Luc	2413303	[+] 24133 18.3	Orga 11921→ 2009-06-28→	Luc	82075400		
Luc	82506000		→Orga 11193 →2007-07-01	Luc	82063300		
PRO	92129503	ø 330 x 30 x 48		PRO	92129603	ø 290 x 12 x 35	
	TPM0012				TPM0012		

550200

2.2 HDi	06/08→	120 / 163

Luc	2413303	[+] 24133 18.3		Luc	2413501	[–] 24135 17.8	
Luc	82506000			Luc	82075400		
PRO	92129503	ø 330 x 30 x 48		Luc	82063300		
	TPM0012			PRO	92129603	ø 290 x 12 x 35	
					TPM0012		

550300

2.7 HDi	10/05→	150 / 204
3.0	05/04→	155 / 211

Luc	2413301	[+] 24133 17.7	→Orga 11920 →2009-06-27	Luc	2413501	[–] 24135 17.8	
Luc	2413303	[+] 24133 18.3	Orga 11921→ 2009-06-28→ →Orga 12410 →2010-20-31	Luc	82075400		
Ate	2506901	[+] 25069 17	Orga 12411→ 2010-11-01→	Luc	82063300		
Luc	82506000			PRO	92129603	ø 290 x 12 x 35	
Luc	82063300				TPM0012		
Ate	82517900		Orga 12411→ 2010-11-01→				
PRO	92129503	ø 330 x 30 x 48	→Orga 12410 →2010-10.31				

N - P

30 kW / hp												
407 SW (6E_) 05/04→												
550300												
2.7 HDi	10/05→	150 / 204		PRO	92256003	ø 340 x 30 x 48	Orga 12411→ 2010-11-01→					
3.0	05/04→	155 / 211			TPM0012							
408 02/10→												
550400			Bos		2466001	[–] 24660 17.8		Bos		2454001	[–] 24540 16.4	
1.6 16V	02/10→	80 / 109										
1.6 HDi	11/10→	85 / 116	Bos		82054200			Bos		82054300		
1.6 Turbo	02/10→	122 / 166										
2.0	03/11→	105 / 143		PRO	92111603	ø 283 x 26 x 34			ABS	92202100	ø 249 x 9 x 69.2	
2.0 16V	02/10→	108 / 147										
508 11/10→												
550500			Ate		2507001	[o] 25070 17	Ø 340 mm Orga 12775→	Ate		2521801	[–] 25218 16.3	⊖ hybrid-drive
1.6	09/11→	121 / 165										
2.0 HDi 150	04/14→	110 / 150	Ate		2433201	[+] 24332 18.8	Ø 304 mm	Luc		2492201	[–] 24922 17.3	⊕ hybrid-drive
2.0 HDi 180	04/14→	133 / 181										
			Ate		2506901	[+] 25069 17	Ø 340 mm →Orga 12774	Ate		82503500		
			Ate		2522201	[+] 25222 17	Ø 283 mm		PRO	92129603	ø 290 x 12 x 35	⊕ hybrid-drive
			Ate		82032000		Ø 283 mm Ø 304 mm		PRO	92238003	ø 290 x 12 x 44	⊖ hybrid-drive
			Ate		82517900		Ø 340 mm			TPM0012		
				PRO	92232503	ø 283 x 26 x 48						
				PRO	92256003	ø 340 x 30 x 48						
					TPM0012							
550600			Ate		2507001	[o] 25070 17	Ø 340 mm Orga 12775→	Ate		2521801	[–] 25218 16.3	⊖ hybrid-drive
1.6	01/12→	120 / 163										
1.6 HDi	02/12→	84 / 115	Ate		2433201	[+] 24332 18.8	Ø 304 mm	Luc		2492201	[–] 24922 17.3	⊕ hybrid-drive
1.6 THP	11/10→	110 / 150										
1.6 THP	11/10→	115 / 156	Ate		2506901	[+] 25069 17	Ø 340 mm →Orga 12774	Luc		82504400		⊕ hybrid-drive
1.6 VTi	11/10→	85 / 116										
1.6 VTi	11/10→	88 / 120	Ate		2522201	[+] 25222 17	Ø 283 mm	Ate		82062900		⊖ hybrid-drive
2.0 HDi	11/10→	100 / 136										
2.0 HDi	11/10→	103 / 140	Ate		82032000		Ø 283 mm Ø 304 mm	Ate		82503500		⊖ hybrid-drive
2.0 HDi	11/10→	120 / 163										
2.0 HDi Hybrid4 AWC	11/10→	120 / 163	Ate		82062900				PRO	92129603	ø 290 x 12 x 35	
2.2 HDi	11/10→	150 / 204										
			Ate		82517900		Ø 340 mm			TPM0012		
				PRO	92232303	ø 304 x 28 x 48.1						
				PRO	92232503	ø 283 x 26 x 48						
				PRO	92256003	ø 340 x 30 x 48						
					TPM0012							
550700			Ate		2507001	[o] 25070 17	Ø 340 mm Orga 12775→	Ate		2521801	[–] 25218 16.3	⊖ hybrid-drive
1.6 HDi	11/10→	82 / 112										
			Ate		2433201	[+] 24332 18.8	Ø 304 mm	Luc		2492201	[–] 24922 17.3	⊕ hybrid-drive
			Ate		2506901	[+] 25069 17	Ø 340 mm →Orga 12774	Luc		82504400		⊕ hybrid-drive
			Ate		2522201	[+] 25222 17	Ø 283 mm	Ate		82062900		⊖ hybrid-drive
			Ate		82032000		Ø 283 mm Ø 304 mm	Ate		82503500		⊖ hybrid-drive
			Ate		82062900				PRO	92238003	ø 290 x 12 x 44	
			Ate		82517900		Ø 340 mm			TPM0012		
				PRO	92232303	ø 304 x 28 x 48.1						
				PRO	92232503	ø 283 x 26 x 48						
				PRO	92256003	ø 340 x 30 x 48						
					TPM0012							
550800			Ate		2507001	[o] 25070 17	Ø 340 mm Orga 12775→	Luc		2492201	[–] 24922 17.3	
2.0 HDi Hybrid4 AWC	11/10→	147 / 163										
			Ate		2433201	[+] 24332 18.8	Ø 304 mm		PRO	92129603	ø 290 x 12 x 35	
			Ate		2506901	[+] 25069 17	Ø 340 mm →Orga 12774					

N - P

		kW / hp										
508 11/10→												
		550800	Ate		2522201	[+] 25222 17	Ø 283 mm			TPM0012		
2.0 HDi Hybrid4 AWC	11/10→	147 / 163	Ate		82032000		Ø 283 mm Ø 304 mm					
			Ate		82517900		Ø 340 mm					
				PRO	92232503	ø 283 x 26 x 48						
				PRO	92256003	ø 340 x 30 x 48						
					TPM0012							
508 SW 11/10→												
		550900	Ate		2507001	[o] 25070 17	Ø 340 mm Orga 12775→	Ate		2521801	[–] 25218 16.3	⊖ hybrid-drive
1.6 HDi	11/10→	82 / 112										
1.6 HDi	02/12→	84 / 115	Ate		2433201	[+] 24332 18.8	Ø 304 mm	Luc		2492201	[–] 24922 17.3	⊕ hybrid-drive
1.6 THP	11/10→	110 / 150										
1.6 THP	11/10→	115 / 156	Ate		2506901	[+] 25069 17	Ø 340 mm →Orga 12774	Luc		82504400		⊕ hybrid-drive
1.6 VTi	11/10→	85 / 116										
1.6 VTi	11/10→	88 / 120										
2.0 HDi	11/10→	100 / 136	Ate		2522201	[+] 25222 17	Ø 283 mm	Ate		82062900		⊖ hybrid-drive
2.0 HDi	11/10→	103 / 140										
2.0 HDi	11/10→	120 / 163						Ate		82503500		⊖ hybrid-drive
2.2 HDi	11/10→	150 / 204	Ate		82032000		Ø 283 mm Ø 304 mm					
									PRO	92129603	ø 290 x 12 x 35	
			Ate		82062900							
			Ate		82517900		Ø 340 mm			TPM0012		
				PRO	92232303	ø 304 x 28 x 48.1						
				PRO	92232503	ø 283 x 26 x 48						
				PRO	92256003	ø 340 x 30 x 48						
					TPM0012							
		551000	Ate		2507001	[o] 25070 17	Ø 340 mm Orga 12775→	Ate		2521801	[–] 25218 16.3	⊖ hybrid-drive
2.0 HDi 150	04/14→	110 / 150										
2.0 HDi 180	04/14→	133 / 181	Ate		2433201	[+] 24332 18.8	Ø 304 mm	Luc		2492201	[–] 24922 17.3	⊕ hybrid-drive
			Ate		2506901	[+] 25069 17	Ø 340 mm →Orga 12774	Ate		82503500		
			Ate		2522201	[+] 25222 17	Ø 283 mm		PRO	92129603	ø 290 x 12 x 35	⊕ hybrid-drive
			Ate		82032000		Ø 283 mm Ø 304 mm		PRO	92238003	ø 290 x 12 x 44	⊖ hybrid-drive
			Ate		82517900		Ø 340 mm			TPM0012		
				PRO	92232503	ø 283 x 26 x 48						
				PRO	92256003	ø 340 x 30 x 48						
					TPM0012							
		551100	Ate		2507001	[o] 25070 17	Ø 340 mm Orga 12775→	Luc		2492201	[–] 24922 17.3	
2.0 HDi RXH Hybrid4	12/11→	147 / 200	Ate		2433201	[+] 24332 18.8	Ø 304 mm	Luc		82504400		
			Ate		2506901	[+] 25069 17	Ø 340 mm →Orga 12774		PRO	92129603	ø 290 x 12 x 35	
			Ate		2522201	[+] 25222 17	Ø 283 mm			TPM0012		
			Ate		82032000		Ø 283 mm Ø 304 mm					
			Ate		82062900							
			Ate		82517900		Ø 340 mm					
				PRO	92232303	ø 304 x 28 x 48.1						
				PRO	92232503	ø 283 x 26 x 48						
				PRO	92256003	ø 340 x 30 x 48						
					TPM0012							
605 (6B) 06/89→09/99												
		551200	Ben		2129802	[+] 21298 17	→02/91 →90807683	Ate		2127801	[+] 21278 17	
2.0	06/89→09/99	84 / 114	Ben		2150701	[+] 21507 17	03/91→ 90807684→	Ate		82039700		

N - P

		kW / hp										
605 (6B) 06/89→09/99												
		551200	Ben		**82030300**		→02/91 →90807683			**92054800**	ø 290 x 10 x 44	
2.0	06/89→09/99	84 / 114	Ben		**82063600**		→02/91 →90807683			**97029100**		
					92054400	ø 276 x 22 x 48	→02/91 →90807683					
					92064500	ø 283 x 26 x 48	03/91→ 90807684→					
				PRO	**92232503**	ø 283 x 26 x 48	03/91→ 90807684→					
		551300	Ben		**2129802**	[+] 21298 17	→02/91 →90807683	Ate		**2127801**	[+] 21278 17	
2.0	06/89→09/99	89 / 121										
2.0	02/90→09/99	79 / 107	Ben		**2150701**	[+] 21507 17	03/91→ 90807684→	Ate		**82039700**		
2.1 Turbo Diesel	06/89→09/99	80 / 109										
3.0	10/89→09/99	123 / 167	Ben		**82030300**		→02/91 →90807683			**92054800**	ø 290 x 10 x 44	
			Ben		**82063600**		→02/91 →90807683			**TPM0012**		
					92054400	ø 276 x 22 x 48	→02/91 →90807683			**97029100**		
					92064500	ø 283 x 26 x 48	03/91→ 90807684→					
				PRO	**92232503**	ø 283 x 26 x 48	03/91→ 90807684→					
					TPM0012							
		551400	Ben		**2150701**	[+] 21507 17	90807684→	Ate		**2127801**	[+] 21278 17	
2.0 16V	07/94→09/99	97 / 132										
2.0 Turbo	07/91→09/99	108 / 147			**92064500**	ø 283 x 26 x 48	90807684→	Ate		**82039700**		
2.0 Turbo	07/92→09/99	104 / 141										
2.1 TD 12V	08/94→09/99	80 / 109		PRO	**92232503**	ø 283 x 26 x 48	90807684→			**92054800**	ø 290 x 10 x 44	
2.5 Turbo Diesel	07/94→09/99	95 / 129										
					TPM0012					**TPM0012**		
										97029100		
		551500	Ate		**2121102**	[o] 21211 18.7		Ate		**2127801**	[+] 21278 17	
3.0 SV 24	08/89→09/99	147 / 200										
					98016000	L250		Ate		**82039700**		
			Ate		**82029300**					**92054800**	ø 290 x 10 x 44	
			Ate		**82062900**					**TPM0012**		
					TPM0012					**97029100**		
		551600	Ate		**2121102**	[o] 21211 18.7		Ate		**2127801**	[+] 21278 17	
3.0 V6	04/97→09/99	140 / 190										
					98016000	L250	Teves	Ate		**82039700**		
			Ate		**82029300**					**92054800**	ø 290 x 10 x 44	
			Ate		**82062900**					**TPM0012**		
					92064500	ø 283 x 26 x 48				**97029100**		
				PRO	**92232503**	ø 283 x 26 x 48						
					TPM0012							
605 Saloon (6B) 06/89→09/99 → 605 (6B), Page 893												
605 Stufenheck (6B) 06/89→09/99 → 605 (6B), Page 893												
607 (9D, 9U) 02/00→07/04												
		551700	Luc		**2167403**	[+] 21674 19.3	→12/04	Ate		**2127803**	[–] 21278 17	→12/04
2.0	02/00→	100 / 136										
2.0 HDI	05/00→	80 / 109	Luc		**2413301**	[+] 24133 17.7	01/05→	Luc		**2413501**	[–] 24135 17.8	01/05→
2.2 16V	02/00→	116 / 158										
2.2 HDI	02/00→	98 / 133	Luc		**82506000**		01/05→	Ate		**82039700**		→12/04
			Luc		**82063300**			Luc		**82075400**		01/05→
				PRO	**92111803**	ø 283 x 26 x 48	→12/04			**92112000**	ø 290 x 10 x 51	→12/04
				PRO	**92129503**	ø 330 x 30 x 48	01/05→		PRO	**92129603**	ø 290 x 12 x 35	01/05→
					TPM0012					**TPM0012**		
										91054800	ø 180 x 30	

		kW / hp										
607 (9D, 9U) 02/00→07/04												
		551700										
2.0	02/00→	100 / 136										
2.0 HDI	05/00→	80 / 109										
2.2 16V	02/00→	116 / 158										
2.2 HDI	02/00→	98 / 133										
											97012500	
		551800	Luc		2167403	[+] 21674 19.3		Ate		2127803	[–] 21278 17	
2.0 HDi	03/01→07/04	79 / 107	Luc		82063300			Ate		82039700		
				PRO	92111803	ø 283 x 26 x 48				92112000	ø 290 x 10 x 51	
					TPM0012					TPM0012		
										91054800	ø 180 x 30	
										97012500		
		551900	Luc		2413301	[+] 24133 17.7		Luc		2413501	[–] 24135 17.8	
2.0 HDI	09/05→	100 / 136	Luc		82506000			Luc		82075400		
2.2 16V	09/05→	120 / 163		PRO	92129503	ø 330 x 30 x 48			PRO	92129603	ø 290 x 12 x 35	
2.2 HDi	05/06→	125 / 170			TPM0012					TPM0012		
2.7 HDi 24V	12/04→	150 / 204								91054800	ø 180 x 30	
										97012500		
		552000	Bre		2357501	[+] 23575 16	→12/04	Ate		2127803	[–] 21278 17	→12/04
3.0 V6 24V	02/00→	152 / 207	Luc		2413301	[+] 24133 17.7	01/05→	Luc		2413501	[–] 24135 17.8	01/05→
3.0 V6 24V	03/04→	155 / 211	Bre		82072400		→12/04	Ate		82039700		→12/04
			Luc		82506000		01/05→	Luc		82075400		01/05→
					92111900	ø 309 x 32 x 43	→12/04			92112000	ø 290 x 10 x 51	→12/04
				PRO	92129503	ø 330 x 30 x 48	01/05→		PRO	92129603	ø 290 x 12 x 35	01/05→
					TPM0012					TPM0012		
										91054800	ø 180 x 30	
										97012500		
607 Saloon (9D, 9U) 02/00→07/04 → 607 (9D, 9U), Page 894												
607 Stufenheck (9D, 9U) 02/00→07/04 → 607 (9D, 9U), Page 894												
806 (221) 06/94→08/02												
		552100	Ben		2304201	[+] 23042 19		Ate		2127501	[+] 21275 16.9	⊕ rear disc brake
1.8	07/95→08/02	73 / 99	Ben		82030200			Ate		82030900		⊕ rear disc brake
			Luc		82055400		2x	Ate		82062900		
					92088000	ø 257 x 20 x 40.5		Ben		91047800	ø 255 x 61	⊕ rear drum brake
								Ben		97009600		⊕ rear drum brake
								Ben		84047800	bore ø 19 ø 255 x 61	⊕ rear drum brake
										92074100	ø 295 x 10 x 56	⊕ rear disc brake
										94015000	ø 255,0 x 67	⊕ rear drum brake
								Ate		91054700	ø 180 x 31	⊕ rear disc brake
										97012500		
		552200	Gir		2180101	[+] 21801 19.3		Ate		2127501	[+] 21275 16.9	⊕ rear disc brake
1.9 TD	07/95→08/02	66 / 90										
1.9 TD	05/97→08/02	68 / 92	Luc		82055400		2x	Ate		82030900		⊕ rear disc brake
2.0	06/94→08/02	89 / 121										
2.0 16V	05/98→09/00	97 / 132	Luc		82063300			Ate		82062900		
2.0 16V	09/00→08/02	100 / 136										
2.0 HDI	08/99→08/02	80 / 109		PRO	92074003	ø 281 x 26 x 43.5		Ben		91047800	ø 255 x 61	⊕ rear drum brake
2.0 HDI 16V	08/99→08/02	80 / 109						Ben		97009600		⊕ rear drum brake
2.0 Turbo	06/94→08/02	108 / 147										
2.1 td 12V	06/96→08/99	80 / 109										

N - P

		kW / hp											
806 (221) 06/94→08/02													
		552200							Ben		84047800	bore ø 19 ø 255 x 61	⊕ rear drum brake
1.9 TD	07/95→08/02	66 / 90									92074100	ø 295 x 10 x 56	⊕ rear disc brake
1.9 TD	05/97→08/02	68 / 92									94015000	ø 255,0 x 67	⊕ rear drum brake
2.0	06/94→08/02	89 / 121							Ate		91054700	ø 180 x 31	⊕ rear disc brake
2.0 16V	05/98→09/00	97 / 132									97012500		
2.0 16V	09/00→08/02	100 / 136											
2.0 HDI	08/99→08/02	80 / 109											
2.0 HDI 16V	08/99→08/02	80 / 109											
2.0 Turbo	06/94→08/02	108 / 147											
2.1 td 12V	06/96→08/99	80 / 109											
807 (E) 06/02→													
		552300	Luc		2026101	[+] 20261 19.3			Luc		2096110	[–] 20961 17.4	
2.0	06/02→	100 / 136	Luc		82055400		2x				82062700		
2.0 16V	09/05→	103 / 140	Gir		82059500				Luc		82062800		
2.0 HDi	06/02→	79 / 107	Luc		82063500					PRO	92118203	ø 272 x 12 x 28	
2.0 HDi	04/04→05/06	80 / 109			92115000	ø 285 x 28 x 43.5							
2.0 HDi	02/06→	88 / 120											
2.0 HDI	06/06→	100 / 136											
2.2	06/02→	116 / 158											
2.2 HDi	06/02→	94 / 128											
		552400	Luc		2483901	[+] 24839 19.4			Luc		2096110	[–] 20961 17.4	
2.0 HDi	06/09→	120 / 163	Luc		82055400		2x				82062700		
2.2 HDi	06/06→	125 / 170	Luc		82513300				Luc		82062800		
										PRO	92118203	ø 272 x 12 x 28	
		552500	Luc		2483901	[+] 24839 19.4			Luc		2096110	[–] 20961 17.4	
2.2 HDi	06/06→	120 / 163	Luc		82055400					PRO	92118203	ø 272 x 12 x 28	
					92118100	ø 310 x 32 x 43.5							
		552600	Bre		2357501	[+] 23575 16			Luc		2096110	[–] 20961 17.4	
3.0 V6	06/02→	150 / 204	Luc		82055400		2x				82062700		
			Bre		82072400				Luc		82062800		
					92118100	ø 310 x 32 x 43.5				PRO	92118203	ø 272 x 12 x 28	
1007 (KM_) 04/05→													
		552700	Bos		2410101	[–] 24101 19			Luc		91059800	ø 203.2 x 38	Lucas ⊕ ABS
1.4	04/05→	54 / 75	Bos		82054200				Bos		91061600	ø 203.2 x 37	Bosch ⊕ ABS
1.4 16V	10/05→	65 / 88	Bos		82063800				Bos		97031200		Bosch
1.4 HDi	04/05→	50 / 68	Bos		82510100				Luc		97033500		Lucas
				PRO	92111503	ø 266 x 22 x 34			Luc		84059800	bore ø 19 ø 203.2 x 38	⊕ ABS Lucas
					TPM0012				Bos		84061602	bore ø 19 ø 203.2 x 37	⊕ ABS Bosch
											94026600	ø 203,0 x 42	
		552800	Bos		2410101	[–] 24101 19			Luc		2355402	[–] 23554 17.2	
1.6 16V	04/05→	80 / 109	Bos		82054200				Luc	epad	2355481	[–] 23554 17.2	
			Bos		82063800				Luc		82037300		
			Bos		82510100				Luc		82062800		
				PRO	92111503	ø 266 x 22 x 34				PRO	92111703	ø 246.5 x 9 x 35	
					TPM0012						TPM0012		
		552900	Bos		2360001	[–] 23600 19			Luc		2355402	[–] 23554 17.2	
1.6 HDi	06/07→	80 / 109	Bos		82054200				Luc	epad	2355481	[–] 23554 17.2	
			Bos		82063800				Luc		82037300		
			Bos		82510100				Luc		82062800		

		kW / hp											
1007 (KM_) 04/05→													
		552900											
1.6 HDi	06/07→	80 / 109		PRO	92111603	ø 283 x 26 x 34			PRO	92111703	ø 246.5 x 9 x 35	
					TPM0012					TPM0012		
2008 03/13→													
		553000	Bos		2395401	[–] 23954 19	Ø 266 mm		Luc	2355402	[–] 23554 17.2	
1.2 VTi	03/13→	60 / 82										
1.4 HDi	06/13→	50 / 68										
1.6 HDi	03/13→	68 / 92	Bos		2488301	[–] 24883 18	Ø 283 mm		Luc	2355481	[–] 23554 17.2	
1.6 HDi	03/13→	84 / 114										
1.6 VTi	03/13→	88 / 120		PRO	92111503	ø 266 x 22 x 34	Ø 266 mm			92202100	ø 249 x 9 x 69.2	
				PRO	92111603	ø 283 x 26 x 34	Ø 283 mm					
					TPM0012							
3008 06/09→													
		553100	Bos		2466001	[–] 24660 17.8			Luc	2492201	[–] 24922 17.3	
1.6 HDi	06/09→	80 / 109										
1.6 HDi	08/10→	82 / 112										
1.6 VTi	06/09→	88 / 120	Bos		82054200				Luc	82504400		
				PRO	92111603	ø 283 x 26 x 34			Luc	82063300		
					TPM0012					92168700	ø 268 x 12 x 73.2	
										TPM0012		
		553200	Bos		2466001	[–] 24660 17.8			Luc	2492201	[–] 24922 17.3	
1.6 HDi	03/13→	84 / 114										
				PRO	92111603	ø 283 x 26 x 34				92168700	ø 268 x 12 x 73.2	Orga 12397→ 2010-10-18→
										92231303	ø 290 x 12 x 35	→Orga 12396 →Orga 17.10.2010
										TPM0012		
		553300	Bos		2466001	[–] 24660 17.8			Luc	2492201	[–] 24922 17.3	
1.6 HDi	05/14→	88 / 120										
1.6 Turbo	05/14→	121 / 165		PRO	92111603	ø 283 x 26 x 34				92168700	ø 268 x 12 x 73.2	
					TPM0012					92231303	ø 290 x 12 x 35	
										TPM0012		
		553400	Ate		2358901	[–] 23589 19			Luc	2492201	[–] 24922 17.3	
1.6 THP	06/09→	110 / 150										
1.6 THP	06/09→	115 / 156	Ate		82032000				Luc	82504400		
2.0 HDi	06/09→	110 / 150										
2.0 HDi	06/09→	120 / 165	Ate		82062900				Luc	82063300		
					92168500	ø 302 x 26 x 34.2				92168700	ø 268 x 12 x 73.2	
				PRO	92168503	ø 302 x 26 x 34.2				TPM0012		
					TPM0012							
		553500	Ate		2358901	[–] 23589 19			Luc	2492201	[–] 24922 17.3	
1.6 THP	01/12→	120 / 163										
			Ate		82032000				Luc	82504400		
			Ate		82062900				Luc	82063300		
					92168500	ø 302 x 26 x 34.2				92168700	ø 268 x 12 x 73.2	
				PRO	92168503	ø 302 x 26 x 34.2						
		553600	Ate		2358901	[–] 23589 19			Luc	2492201	[–] 24922 17.3	
2.0 HDi	09/11→	100 / 136										
			Bre		2357501	[+] 23575 16				92168700	ø 268 x 12 x 73.2	
			Ate		82032000							
					92168500	ø 302 x 26 x 34.2						
				PRO	92168503	ø 302 x 26 x 34.2						
					TPM0012							
		553700	Ate		2358901	[–] 23589 19	Orga 12397→ 2010-10-17→		Luc	2492201	[–] 24922 17.3	
2.0 HDi Hybrid4	02/11→	120 / 165										

N - P

		kW / hp											
3008 06/09→													
		553700	Ate		**2455801**	[–] 24558 18	→Orga 12396 →2010-10-16	Luc		**82504400**			
2.0 HDi Hybrid4	02/11→	120 / 165	Ate		**82032000**		Orga 12397→ 2010-10-17→	Luc		**82063300**			
			Ate		**82062900**				ABS	**92168700**	ø 268 x 12 x 73.2	Orga 12397→ 2010-10-17→
					92168500	ø 302 x 26 x 34.2			PRO	**92231303**	ø 290 x 12 x 35	→Orga 12396 →2010-10-16
				PRO	**92168503**	ø 302 x 26 x 34.2				**TPM0012**		
					TPM0012							
4007 (GP_) 02/07→													
		553800	Ake		**2136301**	[+] 21363 15.7		Ake		**2358202**	[+] 23582 15.5	
2.0	11/10→	108 / 147										
2.0 4x4	11/10→	108 / 147	Ake		**2137001**	[+] 21370 15.7	optional	Ake		**82501800**		
			Ake		**82032700**					**91073400**	ø 170 x 32	
				PRO	**92135203**	ø 294 x 24 x 45.6						
		553900	Ake		**2136301**	[+] 21363 15.7		Ake		**2358202**	[+] 23582 15.5	
2.2 HDi	02/07→	115 / 156										
2.4 16V	01/08→	125 / 170	Ake		**2137001**	[+] 21370 15.7	optional	Ake		**82501800**		
			Ake		**82032700**					**92167000**	ø 302 x 10 x 58.6	
				PRO	**92135203**	ø 294 x 24 x 45.6			PRO	**92167003**	ø 302 x 10 x 58.6	
										91068300	ø 190 x 32	
4008 05/12→													
		554000	Ake		**2358401**	[+] 23584 16		Ake		**2358202**	[+] 23582 15.5	→Orga 13114 →2012-10-04
1.6 HDi AWC	05/12→	84 / 114										
1.8 HDi AWC	05/12→	110 / 150	Ake		**82507300**			Ake		**2568801**	[+] 25688 14.3	Orga 13115→ 2012-10-05→
2.0 AWC	05/12→	110 / 150		PRO	**92257603**	ø 294 x 26 x 45.6		Ake		**82501800**		→Orga 13114 →2012-10-04
									PRO	**92255103**	ø 302 x 10 x 60.1	→Orga 13114 →2012-10-04
5008 06/09→													
		554100	Ate		**2453801**	[–] 24538 18.8		Luc		**2492201**	[–] 24922 17.3	
1.6 16V	09/09→	88 / 120										
1.6 HDi	08/10→	82 / 112	Ate		**82032000**			Luc		**82504400**		
1.6 HDi	03/13→	84 / 114	Ate		**82062900**			Luc		**82063300**		
				PRO	**92111603**	ø 283 x 26 x 34			ABS	**92168700**	ø 268 x 12 x 73.2	
					TPM0012							
		554200	Ate		**2455801**	[–] 24558 18		Luc		**2492201**	[–] 24922 17.3	
1.6 16V	09/09→	115 / 156										
2.0 HDi	06/09→	110 / 150	Ate		**82032000**			Luc		**82504400**		
2.0 HDi	09/09→	120 / 163	Ate		**82062900**			Luc		**82063300**		
2.0 HDi	02/12→	100 / 136			**92168500**	ø 302 x 26 x 34.2			ABS	**92168700**	ø 268 x 12 x 73.2	
				PRO	**92168503**	ø 302 x 26 x 34.2						
					TPM0012							
		554300	Ate		**2453801**	[–] 24538 18.8		Luc		**2492201**	[–] 24922 17.3	
1.6 HDi	09/09→	80 / 110	Bos		**82054200**			Luc		**82504400**		
				PRO	**92111603**	ø 283 x 26 x 34		Luc		**82063300**		
					TPM0012				ABS	**92168700**	ø 268 x 12 x 73.2	
BIPPER (AA_) 02/08→													
		554400	Bos		**2370601**	[+] 23706 17.8				**91067600**	ø 228.6 x 42	
1.3 HDi 75	10/10→	55 / 75	Bos		**82054300**			Lkh		**97030900**		
				PRO	**92069603**	ø 257 x 22 x 40.5				**94014000**	ø 228,3 x 48	

N - P

		kW / hp											
BIPPER (AA_) 02/08→													
554400													
1.3 HDi 75	10/10→	55 / 75									94034000	ø 228,3 x 48	
554500													
1.4	02/08→	54 / 73	Bos		2397903	[+] 23979 17.8					91065300	ø 203.2 x 38	
			Bos		82054300						97031600		
				PRO	92069603	ø 257 x 22 x 40.5					83065300	bore ø 20.6 ø 203.2 x 38	
								Lkh			84065301	bore ø 20.6 ø 203.2 x 38	
								Lkh			84065300	bore ø 19 ø 203.2 x 38	
											94034100	ø 203,2 x 47	
554600													
1.4 HDi	02/08→	50 / 68	Bos		2397903	[+] 23979 17.8					91067600	ø 228.6 x 42	
			Bos		82054300			Lkh			97030900		
				PRO	92069603	ø 257 x 22 x 40.5					94034000	ø 228,3 x 48	
BIPPER Tepee 04/08→													
554700													
1.3 HDi 75	10/10→	55 / 75	Bos		2370601	[+] 23706 17.8					91067600	ø 228.6 x 42	
			Bos		82054300			Lkh			97030900		
				PRO	92069603	ø 257 x 22 x 40.5					94014000	ø 228,3 x 48	
554800													
1.4	04/08→	54 / 73	Bos		2397903	[+] 23979 17.8					91065300	ø 203.2 x 38	
			Bos		82054300						97031600		
				PRO	92069603	ø 257 x 22 x 40.5					83065300	bore ø 20.6 ø 203.2 x 38	
								Lkh			84065301	bore ø 20.6 ø 203.2 x 38	
											94034100	ø 203,2 x 47	
554900													
1.4 HDi	04/08→	50 / 68	Bos		2397903	[+] 23979 17.8					91067600	ø 228.6 x 42	
			Bos		82054300			Lkh			97030900		
				PRO	92069603	ø 257 x 22 x 40.5					94014000	ø 228,3 x 48	
BOXER Box (230L) 03/94→04/02													
555000			Luc		2179701	[+] 21797 19.7	⊕ 27 + 31 ⊕ round plug ⊕ 1000 kg payload 1400 kg payload →16206253	Bre			2392101	[–] 23921 20.1	16194400→ ⊕ rear disc brake
1.9 D	03/94→04/02	51 / 69											
1.9 D	07/99→04/02	50 / 68									82061700		16194400→ ⊕ rear disc brake
1.9 TD	03/94→04/02	68 / 92	Luc		2179901	[+] 21799 19.7	⊕ 35 ⊕ 1800 kg payload ⊕ round plug →16205352						
1.9 TD	07/99→04/02	66 / 90						Bre			82505900		2x
2.0 HDI	08/01→04/02	62 / 84											
2.0 i	06/94→04/02	80 / 109	Luc		2360201	[+] 23602 19.7	⊕ 27 + 31 ⊕ 1000 kg payload 1400 kg payload ⊕ flat plug →16206253	Luc			91047900	ø 254 x 57	⊕ rear drum brake ⊕ 27 + 31 ⊕ 1000 kg payload 1400 kg payload →16206253
2.5 D	03/94→04/02	63 / 86											
2.5 D 4x4	07/99→04/02	63 / 86											
2.5 DT	10/97→11/01	62 / 84	Luc		2360301	[+] 23603 19.7	⊕ 35 ⊕ 1800 kg payload ⊕ flat plug →16205352						
2.5 TD	03/94→04/02	76 / 103						Luc			91049600	ø 254 x 57	⊕ rear drum brake ⊕ 35 ⊕ 1800 kg payload →16209999
2.5 TDI	01/97→04/02	79 / 107											
2.5 TDI 4x4	07/99→04/02	79 / 107	Bre		2391701	[+] 23917 19.1	⊕ 27 + 31 payl.1000 kg→ →payl.1400 kg 16204256→						
2.8 D	01/99→02/02	64 / 87						Lkh			91060900	ø 254 x 57	⊕ rear drum brake ⊕ 27 + 31 payl.1000 kg→ →payl.1400 kg 16204256→
2.8 HDi	10/00→11/01	93 / 126	Bre		2391901	[+] 23919 19.1	⊕ 35 ⊕ 1800 kg payload 16194400→						
2.8 HDI	11/00→04/02	94 / 128											
2.8 HDi 4x4	10/00→11/01	93 / 126	Bre		82505900		2x	Luc			97010300		Lucas
2.8 HDi 4x4	10/00→04/02	94 / 128											
			Luc		82063300		→08/01				97031300		Lockheed
				PRO	92073703	ø 280 x 18 x 65.5	⊕ 27 + 31 ⊕ 1000 kg payload 1400 kg payload →16206253	Luc			84049600	bore ø 28.6 ø 254 x 57	⊕ rear drum brake ⊕ 35 ⊕ 1800 kg payload →16209999
				PRO	92116603	ø 280 x 24 x 65.5	⊕ 27 + 31 payl.1000 kg→ →payl.1400 kg				92116100	ø 280 x 16 x 82	⊕ rear disc brake 16194400→ ⊕ 27 + 31 payl.1000 kg→ →payl.1400 kg
				PRO	92116703	ø 300 x 24 x 65.5	⊕ 35 ⊕ 1800 kg payload						
										PRO	92116203	ø 280 x 16 x 82	⊕ rear disc brake 16194400→ ⊕ 35 ⊕ 1800 kg payload
											94010200	ø 254,0 x 63.5	⊕ rear drum brake ⊕ 27 + 31 payl.1000 kg→ →payl.1400 kg
											94014600	ø 254,0 x 64.5	⊕ rear drum brake ⊕ 35 ⊕ 1800 kg payload →16209999
											91062100	ø 172 x 42	
											97035300		
555100			Luc		2179701	[+] 21797 19.7	⊕ 27 + 31 ⊕ round plug ⊕ 1000 kg payload 1400 kg payload →16206253	Bre			2392101	[–] 23921 20.1	16194400→ ⊕ rear disc brake
2.8 DTiC	10/97→09/00	90 / 122									82061700		16194400→ ⊕ rear disc brake

N - P

BOXER Box (230L) 03/94→04/02

			kW / hp												
		555100													
2.8 DTiC	10/97→09/00	90 / 122	Luc		2179901	[+] 21799	19.7	⊕ 35 ⊕ 1800 kg payload ⊕ round plug →16205352	Bre		82505900			2x
			Luc		2360201	[+] 23602	19.7	⊕ 27 + 31 ⊕ 1000 kg payload 1400 kg payload ⊕ flat plug →16206253	Luc		91047900	ø 254 x 57		⊕ rear drum brake ⊕ 27 + 31 ⊕ 1000 kg payload 1400 kg payload →16206253
			Luc		2360301	[+] 23603	19.7	⊕ 35 ⊕ 1800 kg payload ⊕ flat plug →16205352	Luc		91049600	ø 254 x 57		⊕ rear drum brake ⊕ 35 ⊕ 1800 kg payload →16209999
			Bre		2391701	[+] 23917	19.1	⊕ 27 + 31 payl.1000 kg→ →payl.1400 kg 16204256→	Lkh		91060900	ø 254 x 57		⊕ rear drum brake ⊕ 27 + 31 payl.1000 kg→ →payl.1400 kg 16204256→
			Bre		2391901	[+] 23919	19.1	⊕ 35 ⊕ 1800 kg payload 16194400→	Luc		97010300			Lucas
			Bre		82505900			2x			97031300			Lockheed
			Luc		82063300				Luc		84049600	bore ø 28.6 ø 254 x 57		⊕ rear drum brake ⊕ 35 ⊕ 1800 kg payload →16209999
				PRO	92073703	ø 280 x 18 x 65.5		⊕ 27 + 31 ⊕ 1000 kg payload 1400 kg payload →16206253			92116100	ø 280 x 16 x 82		⊕ rear disc brake 16194400→ ⊕ 27 + 31 payl.1000 kg→ →payl.1400 kg
				PRO	92116603	ø 280 x 24 x 65.5		⊕ 27 + 31 payl.1000 kg→ →payl.1400 kg		PRO	92116203	ø 280 x 16 x 82		⊕ rear disc brake 16194400→ ⊕ 35 ⊕ 1800 kg payload
				PRO	92116703	ø 300 x 24 x 65.5		⊕ 35 ⊕ 1800 kg payload			94010200	ø 254,0 x 63.5		⊕ rear drum brake ⊕ 27 + 31 payl.1000 kg→ →payl.1400 kg
											94014600	ø 254,0 x 64.5		⊕ rear drum brake ⊕ 35 ⊕ 1800 kg payload →16209999
											91062100	ø 172 x 42		
											97035300			

BOXER Box (244) 12/01→09/09

		555200	Bre		2391701	[+] 23917	19.1	⊕ 290 + 330 payl.1000 kg→ →payl.1400 kg	Bre		2392101	[–] 23921	20.1	⊕ rear disc brake
2.0	04/02→	81 / 110												
2.0 HDi	04/02→	62 / 84	Bre		2391901	[+] 23919	19.1	⊕ 350 ⊕ 1800 kg payload			82061700			⊕ rear disc brake
2.2 HDi	04/02→	74 / 101												
2.8 HDi	04/02→	94 / 128									97031300			⊕ rear drum brake
2.8 HDi	04/04→	107 / 146	Bre		82505900									
2.8 HDi 4x4	04/02→	94 / 128												
				PRO	92116603	ø 280 x 24 x 65.5		⊕ 290 + 330 payl.1000 kg→ →payl.1400 kg			92116100	ø 280 x 16 x 82		⊕ 290 + 330 payl.1000 kg→ →payl.1400 kg ⊕ rear disc brake
				PRO	92116703	ø 300 x 24 x 65.5		⊕ 350 ⊕ 1800 kg payload		PRO	92116203	ø 280 x 16 x 82		⊕ 350 ⊕ 1800 kg payload ⊕ rear disc brake
											91064800	ø 172 x 42		
											97035300			
		555300	Bre		2391701	[+] 23917	19.1	payl.800 kg→ →payl.1400 kg	Bre		2392101	[–] 23921	20.1	⊕ rear disc brake
2.0 BiFuel	12/01→06/06	81 / 110												
			Bre		2391901	[+] 23919	19.1	⊕ 1800 kg payload	Lkh		91060900	ø 254 x 57		payl.800 kg→ →payl.1400 kg ⊕ rear drum brake
				PRO	92116603	ø 280 x 24 x 65.5		payl.800 kg→ →payl.1400 kg	Lkh		84060900	bore ø 27 ø 254 x 57		payl.800 kg→ →payl.1400 kg ⊕ rear drum brake
				PRO	92116703	ø 300 x 24 x 65.5		⊕ 1800 kg payload			92116100	ø 280 x 16 x 82		payl.800 kg→ →payl.1400 kg ⊕ rear disc brake
										PRO	92116203	ø 280 x 16 x 82		⊕ 1800 kg payload ⊕ rear disc brake
											94010200	ø 254,0 x 63.5		payl.800 kg→ →payl.1400 kg ⊕ rear drum brake
		555400	Bre		2391701	[+] 23917	19.1	⊕ 800.1 kg payload 1400 kg payload	Bre		2392101	[–] 23921	20.1	⊕ rear disc brake
2.8 HDi	03/02→08/05	90 / 122												
2.8 HDi	09/05→09/09	93 / 126	Bre		2391901	[+] 23919	19.1	⊕ 1800 kg payload	Lkh		91060900	ø 254 x 57		⊕ 800.1 kg payload 1400 kg payload ⊕ rear drum brake
				PRO	92116603	ø 280 x 24 x 65.5		⊕ 800.1 kg payload 1400 kg payload	Lkh		84060900	bore ø 27 ø 254 x 57		⊕ 800.1 kg payload 1400 kg payload ⊕ rear drum brake
				PRO	92116703	ø 300 x 24 x 65.5		⊕ 1800 kg payload			92116100	ø 280 x 16 x 82		⊕ 800.1 kg payload 1400 kg payload ⊕ rear disc brake
										PRO	92116203	ø 280 x 16 x 82		⊕ 1800 kg payload ⊕ rear disc brake
											94010200	ø 254,0 x 63.5		⊕ 800.1 kg payload 1400 kg payload ⊕ rear drum brake

BOXER Box 04/06→12/09

		555500	Bre		2446601	[+] 24466	19	⊕ 2000 kg payload ⊕ incr. payload	Bos		2446501	[–] 24465	18.8	
2.2 HDi 100	04/06→	74 / 101												
2.2 HDi 110	03/11→	81 / 110	Bre		2446602	[+] 24466	19	⊕ 1600 kg payload ⊕ incr. payload	Bos		82054200			
2.2 HDi 120	04/06→	88 / 120												
2.2 HDi 130	03/11→	96 / 131	Bre		2446701	[+] 24467	19	⊕ incr. payload ⊕ 2000 kg payload			92157400	ø 280 x 16 x 82		payl.1100 kg→ →payl.1500 kg ⊕ 1700 kg payload ⊖ incr. payload
2.2 HDi 150	03/11→	110 / 150												
3.0 HDi	07/06→	115 / 156	Bre		2446703	[+] 24467	19	⊕ incr. payload ⊕ 1600 kg payload			92157500	ø 280 x 16 x 80		⊕ 1700 kg payload ⊕ incr. payload
3.0 HDi 145	04/10→	107 / 146												
3.0 HDi 160	04/06→	116 / 156	Bre		2446801	[+] 24468	19	payl.1200 kg→ →payl.1400 kg ⊖ incr. payload			92157600	ø 300 x 16 x 80		⊕ 2000 kg payload
3.0 HDi 175	03/11→	130 / 177												

N - P

BOXER Box 04/06→12/09

		kW / hp											
		555500	Bre		2446802	[+] 24468 19	⊕ 1600 kg payload ⊖ incr. payload			91066700	ø 172 x 42	
2.2 HDi 100	04/06→	74 / 101										
2.2 HDi 110	03/11→	81 / 110										
2.2 HDi 120	04/06→	88 / 120	Bre		2446901	[+] 24469 19	⊖ incr. payload ⊕ 1200 kg payload 1400 kg payload			97035900		
2.2 HDi 130	03/11→	96 / 131										
2.2 HDi 150	03/11→	110 / 150	Bre		2446902	[+] 24469 19	⊖ incr. payload ⊕ 1600 kg payload					
3.0 HDi	07/06→	115 / 156										
3.0 HDi 145	04/10→	107 / 146										
3.0 HDi 160	04/06→	116 / 156	Bre		82073400		⊕ 1100 kg payload 1500 kg payload					
3.0 HDi 175	03/11→	130 / 177	Bre		82073700		⊕ 1700 kg payload ⊖ incr. payload					
			Bre		82075800		⊕ 1700 kg payload ⊕ incr. payload					
			Bre		82075900		⊕ 2000 kg payload					
					92157200	ø 280 x 28 x 69.5	⊕ 1700 kg payload ⊖ incr. payload					
					92157300	ø 300 x 32 x 73.5	⊕ 2000 kg payload					
				PRO	92116603	ø 280 x 24 x 65.5	payl.1100 kg→ →payl.1500 kg					
				PRO	92116703	ø 300 x 24 x 65.5	⊕ 1700 kg payload ⊕ incr. payload					
		555600	Bre		2446601	[+] 24466 19	⊕ 2000 kg payload	Bos		2446501	[–] 24465 18.8	
2.3 HDi	02/07→	93 / 126	Bre		2446602	[+] 24466 19	⊕ 1700 kg payload ⊕ incr. payload	Bos		82054200		
			Bre		2446701	[+] 24467 19	⊕ Mid-life ⊕ incr. payload ⊕ 2000 kg payload			92157400	ø 280 x 16 x 82	payl.1100 kg→ →payl.1500 kg ⊕ 1700 kg payload ⊖ incr. payload
			Bre		2446703	[+] 24467 19	⊕ Mid-life ⊕ incr. payload ⊕ 1600 kg payload			92157500	ø 280 x 16 x 80	⊕ 1700 kg payload ⊕ incr. payload
			Bre		2446801	[+] 24468 19	payl.1100 kg→ →payl.1500 kg			92157600	ø 300 x 16 x 80	⊕ 2000 kg payload
			Bre		2446802	[+] 24468 19	⊕ 1700 kg payload ⊖ incr. payload			91066700	ø 172 x 42	
			Bre		2446901	[+] 24469 19	⊕ Mid-life ⊖ incr. payload ⊕ 1200 kg payload 1400 kg payload			97035900		
			Bre		2446902	[+] 24469 19	⊕ Mid-life ⊖ incr. payload ⊕ 1600 kg payload					
			Bre		82073400		⊕ 1100 kg payload 1500 kg payload					
			Bre		82073700		⊕ 1700 kg payload ⊖ incr. payload					
			Bre		82075800		⊕ 1700 kg payload ⊕ incr. payload					
			Bre		82075900		⊕ 2000 kg payload					
					92157200	ø 280 x 28 x 69.5	⊕ 1700 kg payload ⊖ incr. payload					
					92157300	ø 300 x 32 x 73.5	⊕ 2000 kg payload					
				PRO	92116603	ø 280 x 24 x 65.5	payl.1100 kg→ →payl.1500 kg					
				PRO	92116703	ø 300 x 24 x 65.5	⊕ 1700 kg payload ⊕ incr. payload					
		555700	Bre		2391701	[+] 23917 19.1	⊕ 800.1 kg payload 1400 kg payload	Bre		2392101	[–] 23921 20.1	⊕ rear disc brake
2.8 HDi	04/06→09/09	93 / 127	Bre		2391901	[+] 23919 19.1	⊕ 1800 kg payload	Lkh		91060900	ø 254 x 57	⊕ 800.1 kg payload 1400 kg payload ⊕ rear drum brake
			Bre		2446701	[+] 24467 19	⊕ Mid-life ⊕ incr. payload ⊕ 2000 kg payload	Lkh		84060900	bore ø 27 ø 254 x 57	⊕ 800.1 kg payload 1400 kg payload ⊕ rear drum brake
			Bre		2446703	[+] 24467 19	⊕ Mid-life ⊕ incr. payload ⊕ 1600 kg payload			92116100	ø 280 x 16 x 82	⊕ 800.1 kg payload 1400 kg payload ⊕ rear disc brake
			Bre		2446901	[+] 24469 19	⊕ Mid-life ⊖ incr. payload ⊕ 1200 kg payload 1400 kg payload		PRO	92116203	ø 280 x 16 x 82	⊕ 1800 kg payload ⊕ rear disc brake
			Bre		2446902	[+] 24469 19	⊕ Mid-life ⊖ incr. payload ⊕ 1600 kg payload			94010200	ø 254,0 x 63.5	⊕ 800.1 kg payload 1400 kg payload ⊕ rear drum brake
				PRO	92116603	ø 280 x 24 x 65.5	⊕ 800.1 kg payload 1400 kg payload					
				PRO	92116703	ø 300 x 24 x 65.5	⊕ 1800 kg payload					
		555800	Bre		2446701	[+] 24467 19	⊕ Mid-life ⊕ incr. payload ⊕ 2000 kg payload					
3.0 D	09/08→12/09	116 / 158	Bre		2446703	[+] 24467 19	⊕ Mid-life ⊕ incr. payload ⊕ 1600 kg payload					
			Bre		2446901	[+] 24469 19	⊕ Mid-life ⊖ incr. payload ⊕ 1200 kg payload 1400 kg payload					
			Bre		2446902	[+] 24469 19	⊕ Mid-life ⊖ incr. payload ⊕ 1600 kg payload					

BOXER Bus (230P) 03/94→04/02

		kW / hp
		555900
1.9 D	03/94→04/02	51 / 69
1.9 TD	03/94→04/02	68 / 92
1.9 TD	08/94→04/02	66 / 90
1.9 TD 4x4	07/96→04/02	68 / 92
2.0 i	03/94→04/02	80 / 109
2.0 i 4x4	08/96→04/02	80 / 109
2.5 D	08/94→04/02	63 / 86
2.5 D 4x4	07/96→04/02	63 / 86
2.5 DT	10/97→11/01	62 / 84
2.5 TD	07/94→04/02	76 / 103
2.5 TD 4x4	07/96→04/02	76 / 103
2.5 TDI	01/97→04/02	79 / 107
2.5 TDI 4x4	01/97→04/02	79 / 107
2.8 D	01/99→02/02	64 / 87
2.8 HDi	10/00→11/01	93 / 126
2.8 HDI	11/00→04/02	94 / 128
2.8 HDi 4x4	10/00→04/02	94 / 128
2.8 HDi All-wheel Drive	10/00→11/01	93 / 126

Luc		2179701	[+] 21797	19.7	⊕ 27 + 31 ⊕ round plug ⊕ 1000 kg payload 1400 kg payload →16206253	Bre		2392101	[–] 23921	20.1	16194400→ ⊕ rear disc brake
Luc		2179901	[+] 21799	19.7	⊕ 35 ⊕ 1800 kg payload ⊕ round plug →16205352			82061700			16194400→ ⊕ rear disc brake
Luc		2360201	[+] 23602	19.7	⊕ 27 + 31 ⊕ 1000 kg payload 1400 kg payload ⊕ flat plug →16206253	Bre		82505900			2x
Luc		2360301	[+] 23603	19.7	⊕ 35 ⊕ 1800 kg payload ⊕ flat plug →16205352	Luc		91047900	ø 254 x 57		⊕ rear drum brake ⊕ 27 + 31 ⊕ 1000 kg payload 1400 kg payload →16206253
Bre		2391701	[+] 23917	19.1	⊕ 27 + 31 payl.1000 kg→ →payl.1400 kg 16204256→	Luc		91049600	ø 254 x 57		⊕ rear drum brake ⊕ 35 ⊕ 1800 kg payload →16209999
Bre		2391901	[+] 23919	19.1	⊕ 35 ⊕ 1800 kg payload 16194400→	Lkh		91060900	ø 254 x 57		⊕ rear drum brake ⊕ 27 + 31 payl.1000 kg→ →payl.1400 kg 16204256→
Bre		82505900			2x	Luc		97010300			Lucas
Luc		82063300			→08/01			97031300			Lockheed
	PRO	92073703	ø 280 x 18 x 65.5		⊕ 27 + 31 ⊕ 1000 kg payload 1400 kg payload →16206253	Luc		84049600	bore ø 28.6 ø 254 x 57		⊕ rear drum brake ⊕ 35 ⊕ 1800 kg payload →16209999
	PRO	92116603	ø 280 x 24 x 65.5		⊕ 27 + 31 payl.1000 kg→ →payl.1400 kg			92116100	ø 280 x 16 x 82		⊕ rear disc brake 16194400→ ⊕ 27 + 31 payl.1000 kg→ →payl.1400 kg
	PRO	92116703	ø 300 x 24 x 65.5		⊕ 35 ⊕ 1800 kg payload		PRO	92116203	ø 280 x 16 x 82		⊕ rear disc brake 16194400→ ⊕ 35 ⊕ 1800 kg payload
								94010200	ø 254,0 x 63.5		⊕ rear drum brake ⊕ 27 + 31 payl.1000 kg→ →payl.1400 kg
								94014600	ø 254,0 x 64.5		⊕ rear drum brake ⊕ 35 ⊕ 1800 kg payload →16209999
								91062100	ø 172 x 42		
								97035300			

		556000
2.8 DTiC	10/97→09/00	90 / 122

Luc		2179701	[+] 21797	19.7	⊕ 27 + 31 ⊕ round plug ⊕ 1000 kg payload 1400 kg payload →16206253	Bre		2392101	[–] 23921	20.1	16194400→ ⊕ rear disc brake
Luc		2179901	[+] 21799	19.7	⊕ 35 ⊕ 1800 kg payload ⊕ round plug →16205352			82061700			16194400→ ⊕ rear disc brake
Luc		2360201	[+] 23602	19.7	⊕ 27 + 31 ⊕ 1000 kg payload 1400 kg payload ⊕ flat plug →16206253	Bre		82505900			2x
Luc		2360301	[+] 23603	19.7	⊕ 35 ⊕ 1800 kg payload ⊕ flat plug →16205352	Luc		91047900	ø 254 x 57		⊕ rear drum brake ⊕ 27 + 31 ⊕ 1000 kg payload 1400 kg payload →16206253
Bre		2391701	[+] 23917	19.1	⊕ 27 + 31 payl.1000 kg→ →payl.1400 kg 16204256→	Luc		91049600	ø 254 x 57		⊕ rear drum brake ⊕ 35 ⊕ 1800 kg payload →16209999
Bre		2391901	[+] 23919	19.1	⊕ 35 ⊕ 1800 kg payload 16194400→	Lkh		91060900	ø 254 x 57		⊕ rear drum brake ⊕ 27 + 31 payl.1000 kg→ →payl.1400 kg 16204256→
Bre		82505900			2x	Luc		97010300			Lucas
Luc		82063300						97031300			Lockheed
	PRO	92073703	ø 280 x 18 x 65.5		⊕ 27 + 31 ⊕ 1000 kg payload 1400 kg payload →16206253	Luc		84049600	bore ø 28.6 ø 254 x 57		⊕ rear drum brake ⊕ 35 ⊕ 1800 kg payload →16209999
	PRO	92116603	ø 280 x 24 x 65.5		⊕ 27 + 31 payl.1000 kg→ →payl.1400 kg			92116100	ø 280 x 16 x 82		⊕ rear disc brake 16194400→ ⊕ 27 + 31 payl.1000 kg→ →payl.1400 kg
	PRO	92116703	ø 300 x 24 x 65.5		⊕ 35 ⊕ 1800 kg payload		PRO	92116203	ø 280 x 16 x 82		⊕ rear disc brake 16194400→ ⊕ 35 ⊕ 1800 kg payload
								94010200	ø 254,0 x 63.5		⊕ rear drum brake ⊕ 27 + 31 payl.1000 kg→ →payl.1400 kg
								94014600	ø 254,0 x 64.5		⊕ rear drum brake ⊕ 35 ⊕ 1800 kg payload →16209999
								91062100	ø 172 x 42		
								97035300			

BOXER Bus (244, Z_) 12/01→06/06

		556100
2.0	04/02→	81 / 110
2.0 HDi	04/02→	62 / 84
2.2 HDi	04/02→	74 / 101
2.8 HDi	04/02→	94 / 128
2.8 HDi	04/04→	107 / 145
2.8 HDi 4x4	04/02→	94 / 128

Bre		2391701	[+] 23917	19.1	⊕ 290 + 330 payl.1000 kg→ →payl.1400 kg	Bre		2392101	[–] 23921	20.1	⊕ rear disc brake
Bre		2391901	[+] 23919	19.1	⊕ 350 ⊕ 1800 kg payload			82061700			⊕ rear disc brake
Bre		82505900						97031300			⊕ rear drum brake
	PRO	92116603	ø 280 x 24 x 65.5		⊕ 290 + 330 payl.1000 kg→ →payl.1400 kg			92116100	ø 280 x 16 x 82		⊕ 290 + 330 payl.1000 kg→ →payl.1400 kg ⊕ rear disc brake
	PRO	92116703	ø 300 x 24 x 65.5		⊕ 350 ⊕ 1800 kg payload		PRO	92116203	ø 280 x 16 x 82		⊕ 350 ⊕ 1800 kg payload ⊕ rear disc brake
								91064800	ø 172 x 42		
								97035300			

kW / hp

BOXER Bus (244, Z_) 12/01→06/06

556200													
2.0 BiFuel	12/01→06/06	81 / 110	Bre		2391701	[+] 23917 19.1	payl.800 kg→ →payl.1400 kg	Bre		2392101	[–] 23921 20.1	⊕ rear disc brake
			Bre		2391901	[+] 23919 19.1	⊕ 1800 kg payload	Lkh		91060900	ø 254 x 57	payl.800 kg→ →payl.1400 kg ⊕ rear drum brake
				PRO	92116603	ø 280 x 24 x 65.5	payl.800 kg→ →payl.1400 kg	Lkh		84060900	bore ø 27 ø 254 x 57	payl.800 kg→ →payl.1400 kg ⊕ rear drum brake
				PRO	92116703	ø 300 x 24 x 65.5	⊕ 1800 kg payload			92116100	ø 280 x 16 x 82	payl.800 kg→ →payl.1400 kg ⊕ rear disc brake
									PRO	92116203	ø 280 x 16 x 82	⊕ 1800 kg payload ⊕ rear disc brake
										94010200	ø 254,0 x 63.5	payl.800 kg→ →payl.1400 kg ⊕ rear drum brake
556300													
2.8 HDi	03/02→08/05	90 / 122	Bre		2391701	[+] 23917 19.1	⊕ 800.1 kg payload 1400 kg payload	Bre		2392101	[–] 23921 20.1	⊕ rear disc brake
			Bre		2391901	[+] 23919 19.1	⊕ 1800 kg payload	Lkh		91060900	ø 254 x 57	⊕ 800.1 kg payload 1400 kg payload ⊕ rear drum brake
				PRO	92116603	ø 280 x 24 x 65.5	⊕ 800.1 kg payload 1400 kg payload	Lkh		84060900	bore ø 27 ø 254 x 57	⊕ 800.1 kg payload 1400 kg payload ⊕ rear drum brake
				PRO	92116703	ø 300 x 24 x 65.5	⊕ 1800 kg payload			92116100	ø 280 x 16 x 82	⊕ 800.1 kg payload 1400 kg payload ⊕ rear disc brake
									PRO	92116203	ø 280 x 16 x 82	⊕ 1800 kg payload ⊕ rear disc brake
										94010200	ø 254,0 x 63.5	⊕ 800.1 kg payload 1400 kg payload ⊕ rear drum brake

BOXER Bus 04/06→

556400			Bre		2446601	[+] 24466 19	⊕ 2000 kg payload ⊕ incr. payload	Bos		2446501	[–] 24465 18.8	
2.2 HDi 100	04/06→	74 / 101										
2.2 HDi 110	03/11→	81 / 110	Bre		2446602	[+] 24466 19	⊕ 1600 kg payload ⊕ incr. payload	Bos		82054200		
2.2 HDi 130	03/11→	96 / 131										
2.2 HDi 150	03/11→	110 / 150										
3.0 HDi 145	04/10→	107 / 146	Bre		2446701	[+] 24467 19	⊕ incr. payload ⊕ 2000 kg payload			92157400	ø 280 x 16 x 82	payl.1100 kg→ →payl.1500 kg ⊕ 1700 kg payload ⊖ incr. payload
3.0 HDi 160	04/06→	116 / 156										
3.0 HDi 175	03/11→	130 / 177	Bre		2446703	[+] 24467 19	⊕ incr. payload ⊕ 1600 kg payload			92157500	ø 280 x 16 x 80	⊕ 1700 kg payload ⊕ incr. payload
			Bre		2446801	[+] 24468 19	payl.1200 kg→ →payl.1400 kg ⊖ incr. payload			92157600	ø 300 x 16 x 80	⊕ 2000 kg payload
			Bre		2446802	[+] 24468 19	⊕ 1600 kg payload ⊖ incr. payload			91066700	ø 172 x 42	
			Bre		2446901	[+] 24469 19	⊖ incr. payload ⊕ 1200 kg payload 1400 kg payload			97035900		
			Bre		2446902	[+] 24469 19	⊖ incr. payload ⊕ 1600 kg payload					
			Bre		82073400		⊕ 1100 kg payload 1500 kg payload					
			Bre		82073700		⊕ 1700 kg payload ⊖ incr. payload					
			Bre		82075800		⊕ 1700 kg payload ⊕ incr. payload					
			Bre		82075900		⊕ 2000 kg payload					
					92157200	ø 280 x 28 x 69.5	⊕ 1700 kg payload ⊖ incr. payload					
					92157300	ø 300 x 32 x 73.5	⊕ 2000 kg payload					
				PRO	92116603	ø 280 x 24 x 65.5	payl.1100 kg→ →payl.1500 kg					
				PRO	92116703	ø 300 x 24 x 65.5	⊕ 1700 kg payload ⊕ incr. payload					
556500			Bre		2446601	[+] 24466 19	⊕ 2000 kg payload ⊕ incr. payload	Bos		2446501	[–] 24465 18.8	
2.2 HDi 120	04/06→	88 / 120										
			Bre		2446602	[+] 24466 19	⊕ 1600 kg payload ⊕ incr. payload	Bos		82054200		
			Bre		2446701	[+] 24467 19	⊕ incr. payload ⊕ 2000 kg payload			92157400	ø 280 x 16 x 82	payl.1100 kg→ →payl.1500 kg ⊕ 1700 kg payload ⊖ incr. payload
			Bre		2446703	[+] 24467 19	⊕ incr. payload ⊕ 1600 kg payload			92157500	ø 280 x 16 x 80	⊕ 1700 kg payload ⊕ incr. payload
			Bre		2446801	[+] 24468 19	payl.1200 kg→ →payl.1400 kg			92157600	ø 300 x 16 x 80	⊕ 2000 kg payload
			Bre		2446802	[+] 24468 19	⊕ 1600 kg payload ⊖ incr. payload			91066700	ø 172 x 42	
			Bre		2446901	[+] 24469 19	⊖ incr. payload ⊕ 1200 kg payload 1400 kg payload			97035900		
			Bre		2446902	[+] 24469 19	⊖ incr. payload ⊕ 1600 kg payload					
			Bre		82073400		⊕ 1100 kg payload 1500 kg payload					
			Bre		82073700		⊕ 1700 kg payload ⊖ incr. payload					

N - P

		kW / hp										
BOXER Bus 04/06→												
556500												
2.2 HDi 120	04/06→	88 / 120	Bre		**82075800**		⊕ 1700 kg payload ⊕ incr. payload					
			Bre		**82075900**		⊕ 2000 kg payload					
					92157200	ø 280 x 28 x 69.5	⊕ 1700 kg payload ⊖ incr. payload					
					92157300	ø 300 x 32 x 73.5	⊕ 2000 kg payload					
				PRO	**92116603**	ø 280 x 24 x 65.5	payl.1100 kg→ →payl.1500 kg					
				PRO	**92116703**	ø 300 x 24 x 65.5	⊕ 1700 kg payload ⊕ incr. payload					
556600												
2.3 HDi	04/06→	93 / 126	Bre		**2391701**	[+] 23917 19.1	⊕ 800.1 kg payload 1400 kg payload	Bre		**2392101**	[–] 23921 20.1	⊕ rear disc brake
2.8 HDi	04/06→09/09	93 / 127	Bre		**2391901**	[+] 23919 19.1	⊕ 1800 kg payload	Lkh		**91060900**	ø 254 x 57	⊕ 800.1 kg payload 1400 kg payload ⊕ rear drum brake
			Bre		**2446701**	[+] 24467 19	⊕ Mid-life ⊕ incr. payload ⊕ 2000 kg payload	Lkh		**84060900**	bore ø 27 ø 254 x 57	⊕ 800.1 kg payload 1400 kg payload ⊕ rear drum brake
			Bre		**2446703**	[+] 24467 19	⊕ Mid-life ⊕ incr. payload ⊕ 1600 kg payload			**92116100**	ø 280 x 16 x 82	⊕ 800.1 kg payload 1400 kg payload ⊕ rear disc brake
			Bre		**2446901**	[+] 24469 19	⊕ Mid-life ⊖ incr. payload ⊕ 1200 kg payload 1400 kg payload		PRO	**92116203**	ø 280 x 16 x 82	⊕ 1800 kg payload ⊕ rear disc brake
			Bre		**2446902**	[+] 24469 19	⊕ Mid-life ⊖ incr. payload ⊕ 1600 kg payload			**94010200**	ø 254,0 x 63.5	⊕ 800.1 kg payload 1400 kg payload ⊕ rear drum brake
				PRO	**92116603**	ø 280 x 24 x 65.5	⊕ 800.1 kg payload 1400 kg payload					
				PRO	**92116703**	ø 300 x 24 x 65.5	⊕ 1800 kg payload					
556700												
3.0 HDi	07/06→	115 / 156	Bre		**2446601**	[+] 24466 19	payl.1600 kg→ →payl.2000 kg ⊕ incr. payload	Bos		**2446501**	[–] 24465 18.8	
			Bre		**2446602**	[+] 24466 19	payl.1600 kg→ →payl.2000 kg ⊕ incr. payload			**92157400**	ø 280 x 16 x 82	payl.980 kg→ →payl.1600 kg ⊕ decr. payload ⊕ steel rim
			Bre		**2446701**	[+] 24467 19	⊕ Mid-life ⊕ incr. payload ⊕ 2000 kg payload			**92157500**	ø 280 x 16 x 80	⊕ 1600 kg payload ⊕ incr. payload ⊕ steel rim
			Bre		**2446703**	[+] 24467 19	⊕ Mid-life ⊕ incr. payload ⊕ 1600 kg payload			**92157600**	ø 300 x 16 x 80	⊕ 2000 kg payload ⊕ incr. payload ⊕ steel rim
			Bre		**2446801**	[+] 24468 19	payl.980 kg→ →payl.1600 kg ⊕ decr. payload					
			Bre		**2446802**	[+] 24468 19	payl.980 kg→ →payl.1600 kg ⊕ decr. payload					
			Bre		**2446901**	[+] 24469 19	⊕ Mid-life ⊖ incr. payload ⊕ 1200 kg payload 1400 kg payload					
			Bre		**2446902**	[+] 24469 19	⊕ Mid-life ⊖ incr. payload ⊕ 1600 kg payload					
					92157200	ø 280 x 28 x 69.5	⊕ 1600 kg payload ⊕ decr. payload ⊕ steel rim					
					92157300	ø 300 x 32 x 73.5	⊕ 2000 kg payload ⊕ incr. payload ⊕ steel rim					
				PRO	**92116603**	ø 280 x 24 x 65.5	payl.980 kg→ →payl.1400 kg ⊕ decr. payload ⊕ steel rim					
				PRO	**92116703**	ø 300 x 24 x 65.5	⊕ 1600 kg payload ⊕ incr. payload ⊕ steel rim					

BOXER Kasten (230L) 03/94→04/02 → BOXER Box (230L), Page 899

BOXER Kasten (244) 12/01→09/09 → BOXER Box (244), Page 900

BOXER Kasten 04/06→12/09 → BOXER Box, Page 900

BOXER Platform/Chassis (244) 12/01→06/06

556800												
2.0 BiFuel	12/01→06/06	81 / 110	Bre		**2391701**	[+] 23917 19.1	payl.800 kg→ →payl.1400 kg	Bre		**2392101**	[–] 23921 20.1	⊕ rear disc brake
			Bre		**2391901**	[+] 23919 19.1	⊕ 1800 kg payload	Lkh		**91060900**	ø 254 x 57	payl.800 kg→ →payl.1400 kg ⊕ rear drum brake
				PRO	**92116603**	ø 280 x 24 x 65.5	payl.800 kg→ →payl.1400 kg	Lkh		**84060900**	bore ø 27 ø 254 x 57	payl.800 kg→ →payl.1400 kg ⊕ rear drum brake
				PRO	**92116703**	ø 300 x 24 x 65.5	⊕ 1800 kg payload			**92116100**	ø 280 x 16 x 82	payl.800 kg→ →payl.1400 kg ⊕ rear disc brake
									PRO	**92116203**	ø 280 x 16 x 82	⊕ 1800 kg payload ⊕ rear disc brake
										94010200	ø 254,0 x 63.5	payl.800 kg→ →payl.1400 kg ⊕ rear drum brake
556900												
2.0 HDi	04/02→	62 / 84	Bre		**2391701**	[+] 23917 19.1	⊕ 290 + 330 payl.1000 kg→ →payl.1400 kg	Bre		**2392101**	[–] 23921 20.1	⊕ rear disc brake
2.2 HDi	04/02→	74 / 101										
2.8 HDi	04/02→	94 / 128	Bre		**2391901**	[+] 23919 19.1	⊕ 350 ⊕ 1800 kg payload			**82061700**		⊕ rear disc brake
2.8 HDi	04/04→	107 / 146										
2.8 HDi 4x4	04/02→	94 / 128	Bre		**82505900**					**97031300**		⊕ rear drum brake
2.8 TD	12/01→03/05	90 / 122										
				PRO	**92116603**	ø 280 x 24 x 65.5	⊕ 290 + 330 payl.1000 kg→ →payl.1400 kg			**92116100**	ø 280 x 16 x 82	⊕ 290 + 330 payl.1000 kg→ →payl.1400 kg ⊕ rear disc brake
				PRO	**92116703**	ø 300 x 24 x 65.5	⊕ 350 ⊕ 1800 kg payload		PRO	**92116203**	ø 280 x 16 x 82	⊕ 350 ⊕ 1800 kg payload ⊕ rear disc brake

N - P

BOXER Platform/Chassis (244) 12/01→06/06

		kW / hp											
		556900											
2.0 HDi	04/02→	62 / 84								91064800	ø 172 x 42	
2.2 HDi	04/02→	74 / 101										
2.8 HDi	04/02→	94 / 128								97035300		
2.8 HDi	04/04→	107 / 146										
2.8 HDi 4x4	04/02→	94 / 128										
2.8 TD	12/01→03/05	90 / 122										

BOXER Platform/Chassis (ZCT_) 03/94→04/02

		557000	Luc	2179701	[+] 21797 19.7	⊕ 27 + 31 ⊕ round plug ⊕ 1000 kg payload 1400 kg payload →16206253	Bre	2392101	[–] 23921 20.1	16194400→ ⊕ rear disc brake
1.9 TD	07/96→04/02	68 / 92								
1.9 TD	12/98→04/02	66 / 90						82061700		16194400→ ⊕ rear disc brake
2.0 i	06/94→04/02	80 / 109	Luc	2179901	[+] 21799 19.7	⊕ 35 ⊕ 1800 kg payload ⊕ round plug →16205352				
2.5 D	03/94→04/02	63 / 86					Bre	82505900		2x
2.5 D 4x4	07/99→04/02	63 / 86								
2.5 TD	03/94→04/02	76 / 103	Luc	2360201	[+] 23602 19.7	⊕ 27 + 31 ⊕ 1000 kg payload 1400 kg payload ⊕ flat plug →16206253	Luc	91047900	ø 254 x 57	⊕ rear drum brake ⊕ 27 + 31 ⊕ 1000 kg payload 1400 kg payload →16206253
2.5 TDI	01/97→04/02	79 / 107								
2.5 TDI 4x4	07/99→04/02	79 / 107								
2.8 D	01/99→02/02	64 / 87	Luc	2360301	[+] 23603 19.7	⊕ 35 ⊕ 1800 kg payload ⊕ flat plug →16205352	Luc	91049600	ø 254 x 57	⊕ rear drum brake ⊕ 35 ⊕ 1800 kg payload →16209999
2.8 HDi	10/00→11/01	93 / 126								
2.8 HDI	11/00→04/02	94 / 128	Bre	2391701	[+] 23917 19.1	⊕ 27 + 31 payl.1000 kg→ →payl.1400 kg 16204256→				
2.8 HDi All-wheel Drive	10/00→11/01	93 / 126					Lkh	91060900	ø 254 x 57	⊕ rear drum brake ⊕ 27 + 31 payl.1000 kg→ →payl.1400 kg 16204256→
			Bre	2391901	[+] 23919 19.1	⊕ 35 ⊕ 1800 kg payload 16194400→				
			Bre	82505900		2x	Luc	97010300		Lucas
			Luc	82063300		→08/01		97031300		Lockheed
				92073703	ø 280 x 18 x 65.5	⊕ 27 + 31 ⊕ 1000 kg payload 1400 kg payload →16206253	Luc	84049600	bore ø 28.6 ø 254 x 57	⊕ rear drum brake ⊕ 35 ⊕ 1800 kg payload →16209999
				92116603	ø 280 x 24 x 65.5	⊕ 27 + 31 payl.1000 kg→ →payl.1400 kg		92116100	ø 280 x 16 x 82	⊕ rear disc brake 16194400→ ⊕ 27 + 31 payl.1000 kg→ →payl.1400 kg
				92116703	ø 300 x 24 x 65.5	⊕ 35 ⊕ 1800 kg payload		92116203	ø 280 x 16 x 82	⊕ rear disc brake 16194400→ ⊕ 35 ⊕ 1800 kg payload
								94010200	ø 254,0 x 63.5	⊕ rear drum brake ⊕ 27 + 31 payl.1000 kg→ →payl.1400 kg
								94014600	ø 254,0 x 64.5	⊕ rear drum brake ⊕ 35 ⊕ 1800 kg payload →16209999
								91062100	ø 172 x 42	
								97035300		
		557100	Luc	2179701	[+] 21797 19.7	⊕ 27 + 31 ⊕ round plug ⊕ 1000 kg payload 1400 kg payload →16206253	Bre	2392101	[–] 23921 20.1	16194400→ ⊕ rear disc brake
2.0	12/01→04/02	81 / 110								
								82061700		16194400→ ⊕ rear disc brake
			Luc	2179901	[+] 21799 19.7	⊕ 35 ⊕ 1800 kg payload ⊕ round plug →16205352				
							Bre	82505900		2x
			Luc	2360201	[+] 23602 19.7	⊕ 27 + 31 ⊕ 1000 kg payload 1400 kg payload ⊕ flat plug →16206253	Luc	91047900	ø 254 x 57	⊕ rear drum brake ⊕ 27 + 31 ⊕ 1000 kg payload 1400 kg payload →16206253
			Luc	2360301	[+] 23603 19.7	⊕ 35 ⊕ 1800 kg payload ⊕ flat plug →16205352	Luc	91049600	ø 254 x 57	⊕ rear drum brake ⊕ 35 ⊕ 1800 kg payload →16209999
			Bre	2391701	[+] 23917 19.1	⊕ 27 + 31 payl.1000 kg→ →payl.1400 kg 16204256→				
							Lkh	91060900	ø 254 x 57	⊕ rear drum brake ⊕ 27 + 31 payl.1000 kg→ →payl.1400 kg 16204256→
			Bre	2391901	[+] 23919 19.1	⊕ 35 ⊕ 1800 kg payload 16194400→				
			Bre	82505900		2x	Luc	97010300		Lucas
				92073703	ø 280 x 18 x 65.5	⊕ 27 + 31 ⊕ 1000 kg payload 1400 kg payload →16206253		97031300		Lockheed
				92116603	ø 280 x 24 x 65.5	⊕ 27 + 31 payl.1000 kg→ →payl.1400 kg	Luc	84049600	bore ø 28.6 ø 254 x 57	⊕ rear drum brake ⊕ 35 ⊕ 1800 kg payload →16209999
				92116703	ø 300 x 24 x 65.5	⊕ 35 ⊕ 1800 kg payload		92116100	ø 280 x 16 x 82	⊕ rear disc brake 16194400→ ⊕ 27 + 31 payl.1000 kg→ →payl.1400 kg
								92116203	ø 280 x 16 x 82	⊕ rear disc brake 16194400→ ⊕ 35 ⊕ 1800 kg payload
								94010200	ø 254,0 x 63.5	⊕ rear drum brake ⊕ 27 + 31 payl.1000 kg→ →payl.1400 kg
								94014600	ø 254,0 x 64.5	⊕ rear drum brake ⊕ 35 ⊕ 1800 kg payload →16209999
								91062100	ø 172 x 42	
								97035300		

BOXER Platform/Chassis 04/06→

		557200	Bre	2446601	[+] 24466 19	⊕ 2000 kg payload ⊕ incr. payload	Bos	2446501	[–] 24465 18.8	
2.2 HDi 100	04/06→	74 / 101								
2.2 HDi 110	03/11→	81 / 110	Bre	2446602	[+] 24466 19	⊕ 1600 kg payload ⊕ incr. payload	Bos	82054200		
2.2 HDi 120	04/06→	88 / 120								
2.2 HDi 130	03/11→	96 / 131								
2.2 HDi 150	03/11→	110 / 150	Bre	2446701	[+] 24467 19	⊕ incr. payload ⊕ 2000 kg payload		92157400	ø 280 x 16 x 82	payl.1100 kg→ →payl.1500 kg ⊕ 1700 kg payload ⊖ incr. payload
3.0 HDi	02/07→	115 / 156								
3.0 HDi 145	04/10→	107 / 146								
3.0 HDi 160	04/06→	116 / 156	Bre	2446703	[+] 24467 19	⊕ incr. payload ⊕ 1600 kg payload		92157500	ø 280 x 16 x 80	⊕ 1700 kg payload ⊕ incr. payload
3.0 HDi 175	03/11→	130 / 177								

		kW / hp											
BOXER Platform/Chassis 04/06→													
		557200	Bre		2446801	[+] 24468 19	payl.1200 kg→ →payl.1400 kg ⊖ incr. payload			92157600	ø 300 x 16 x 80	⊕ 2000 kg payload
2.2 HDi 100	04/06→	74 / 101										
2.2 HDi 110	03/11→	81 / 110	Bre		2446802	[+] 24468 19	⊕ 1600 kg payload ⊖ incr. payload			91066700	ø 172 x 42	
2.2 HDi 120	04/06→	88 / 120										
2.2 HDi 130	03/11→	96 / 131										
2.2 HDi 150	03/11→	110 / 150	Bre		2446901	[+] 24469 19	⊖ incr. payload ⊕ 1200 kg payload 1400 kg payload			97035900		
3.0 HDi	02/07→	115 / 156										
3.0 HDi 145	04/10→	107 / 146										
3.0 HDi 160	04/06→	116 / 156	Bre		2446902	[+] 24469 19	⊖ incr. payload ⊕ 1600 kg payload					
3.0 HDi 175	03/11→	130 / 177										
			Bre		82073400		⊕ 1100 kg payload 1500 kg payload					
			Bre		82073700		⊕ 1700 kg payload ⊖ incr. payload					
			Bre		82075800		⊕ 1700 kg payload ⊕ incr. payload					
			Bre		82075900		⊕ 2000 kg payload					
					92157200	ø 280 x 28 x 69.5	⊕ 1700 kg payload ⊖ incr. payload					
					92157300	ø 300 x 32 x 73.5	⊕ 2000 kg payload					
				PRO	92116603	ø 280 x 24 x 65.5	payl.1100 kg→ →payl.1500 kg					
				PRO	92116703	ø 300 x 24 x 65.5	⊕ 1700 kg payload ⊕ incr. payload					
BOXER Pritsche/Fahrgestell (244) 12/01→06/06 → BOXER Platform/Chassis (244), Page 904													
BOXER Pritsche/Fahrgestell (ZCT_) 03/94→04/02 → BOXER Platform/Chassis (ZCT_), Page 905													
BOXER Pritsche/Fahrgestell 04/06→ → BOXER Platform/Chassis, Page 905													
EXPERT (224) 02/96→11/03													
		557300	Luc		2026101	[+] 20261 19.3	Orga 9793→ 2003-08-31→	Ben		91047800	ø 255 x 61	
1.6	02/96→	58 / 79										
1.9 D	02/96→	51 / 70	Gir		2180101	[+] 21801 19.3	Orga 9156→ 2001-12-02→ →Orga 9792 →2003-08-30 ⊕ 815 kg payload	Ben		97009600		
1.9 TD	02/96→	66 / 90										
1.9 TD	02/96→	68 / 92					→Orga 9792 →2003-08-30 ⊕ 900 kg payload	Ben		84047800	bore ø 19 ø 255 x 61	
2.0	07/00→	100 / 136										
2.0 HDI	07/00→	80 / 109										
2.0 HDI 16V	07/00→	80 / 109										
			Ben		2304201	[+] 23042 19	→Orga 9155 →2001-12-01 ⊕ 815 kg payload			94015000	ø 255,0 x 67	
			Ben		82030200		→Orga 9155 →2001-12-01 ⊕ 815 kg payload					
			Luc		82055400							
			Gir		82059500		Orga 9793→ 2003-08-31→					
			Luc		82063300		Orga 9156→ 2001-12-02→ →Orga 9792 →2003-08-30 ⊕ 815 kg payload					
							→Orga 9792 →2003-08-30 ⊕ 900 kg payload					
			Luc		82063500		Orga 9793→ 2003-08-31→					
					92088000	ø 257 x 20 x 40.5	→Orga 9155 →2001-12-01 ⊕ 815 kg payload					
					92115000	ø 285 x 28 x 43.5	Orga 9793→ 2003-08-31→					
				PRO	92074003	ø 281 x 26 x 43.5	Orga 9156→ 2001-12-02→ →Orga 9792 →2003-08-30 ⊕ 815 kg payload					
							→Orga 9792 →2003-08-30 ⊕ 900 kg payload					
		557400	Gir		2180101	[+] 21801 19.3	Orga 9156→ 2001-12-02→ ⊕ 815 kg payload	Luc		82055400		
1.8	10/96→09/00	74 / 101					⊕ 900 kg payload					
			Ben		2304201	[+] 23042 19	→Orga 9155 →2001-12-01 ⊕ 815 kg payload	Ben		91047800	ø 255 x 61	
			Ben		82030200		→Orga 9155 →2001-12-01 ⊕ 815 kg payload	Ben		97009600		
			Luc		82055400			Ben		84047800	bore ø 19 ø 255 x 61	
			Luc		82063300		Orga 9156→ 2001-12-02→ ⊕ 815 kg payload			94015000	ø 255,0 x 67	
							⊕ 900 kg payload					
					92088000	ø 257 x 20 x 40.5	→Orga 9155 →2001-12-01 ⊕ 815 kg payload					
				PRO	92074003	ø 281 x 26 x 43.5	Orga 9156→ 2001-12-02→ ⊕ 815 kg payload					
							⊕ 900 kg payload					
		557500	Luc		2026101	[+] 20261 19.3		Ben		91047800	ø 255 x 61	
1.9 D	12/03→	51 / 69										
			Gir		82059500			Ben		97009600		
			Luc		82063500			Ben		84047800	bore ø 19 ø 255 x 61	

		kW / hp									
EXPERT (224) 02/96→11/03											
1.9 D	12/03→	557500 51 / 69		92115000	ø 285 x 28 x 43.5			94015000	ø 255,0 x 67	
2.0 HDi	10/00→11/03	557600 69 / 94	Luc	2026101	[+] 20261 19.3	Orga 9793→ 2003-08-31→	Luc	82055400		
			Gir	2180101	[+] 21801 19.3	Orga 9156→ 2001-12-02→ →Orga 9792 →2003-08-30 ⊕ 815 kg payload →Orga 9792 →2003-08-30 ⊕ 900 kg payload	Ben	91047800	ø 255 x 61	
							Ben	97009600		
			Ben	2304201	[+] 23042 19	→Orga 9155 →2001-12-01 ⊕ 815 kg payload	Ben	84047800	bore ø 19 ø 255 x 61	
			Ben	82030200		→Orga 9155 →2001-12-01 ⊕ 815 kg payload		94015000	ø 255,0 x 67	
			Luc	82055400						
			Gir	82059500		Orga 9793→ 2003-08-31→				
			Luc	82063300		Orga 9156→ 2001-12-02→ →Orga 9792 →2003-08-30 ⊕ 815 kg payload →Orga 9792 →2003-08-30 ⊕ 900 kg payload				
			Luc	82063500		Orga 9793→ 2003-08-31→				
				92088000	ø 257 x 20 x 40.5	→Orga 9155 →2001-12-01 ⊕ 815 kg payload				
				92115000	ø 285 x 28 x 43.5	Orga 9793→ 2003-08-31→				
				92074003	ø 281 x 26 x 43.5	Orga 9156→ 2001-12-02→ →Orga 9792 →2003-08-30 ⊕ 815 kg payload →Orga 9792 →2003-08-30 ⊕ 900 kg payload				
EXPERT Box (222) 02/96→09/00										
1.6	02/96→	557700 58 / 79	Luc	2026101	[+] 20261 19.3	Orga 9793→ 2003-08-31→	Ben	91047800	ø 255 x 61	
1.9 D	02/96→	51 / 70	Gir	2180101	[+] 21801 19.3	Orga 9156→ 2001-12-02→ →Orga 9792 →2003-08-30 ⊕ 815 kg payload →Orga 9792 →2003-08-30 ⊕ 900 kg payload	Ben	97009600		
1.9 D 70	12/98→	51 / 69					Ben	84047800	bore ø 19 ø 255 x 61	
1.9 TD	02/96→	66 / 90								
1.9 TD	02/96→	68 / 92								
2.0	09/02→	100 / 136								
2.0 HDI	07/00→	69 / 94								
2.0 HDI	07/00→	80 / 109	Ben	2304201	[+] 23042 19	→Orga 9155 →2001-12-01 ⊕ 815 kg payload		94015000	ø 255,0 x 67	
2.0 HDI	07/00→	80 / 109	Ben	82030200		→Orga 9155 →2001-12-01 ⊕ 815 kg payload				
			Luc	82055400						
			Gir	82059500		Orga 9793→ 2003-08-31→				
			Luc	82063300		Orga 9156→ 2001-12-02→ →Orga 9792 →2003-08-30 ⊕ 815 kg payload →Orga 9792 →2003-08-30 ⊕ 900 kg payload				
			Luc	82063500		Orga 9793→ 2003-08-31→				
				92088000	ø 257 x 20 x 40.5	→Orga 9155 →2001-12-01 ⊕ 815 kg payload				
				92115000	ø 285 x 28 x 43.5	Orga 9793→ 2003-08-31→				
				92074003	ø 281 x 26 x 43.5	Orga 9156→ 2001-12-02→ →Orga 9792 →2003-08-30 ⊕ 815 kg payload →Orga 9792 →2003-08-30 ⊕ 900 kg payload				
1.8	10/96→09/00	557800 74 / 101	Gir	2180101	[+] 21801 19.3	Orga 9156→ 2001-12-02→ ⊕ 815 kg payload ⊕ 900 kg payload	Luc	82055400		
			Ben	2304201	[+] 23042 19	→Orga 9155 →2001-12-01 ⊕ 815 kg payload	Ben	91047800	ø 255 x 61	
			Ben	82030200		→Orga 9155 →2001-12-01 ⊕ 815 kg payload	Ben	97009600		
			Luc	82055400			Ben	84047800	bore ø 19 ø 255 x 61	
			Luc	82063300		Orga 9156→ 2001-12-02→ ⊕ 815 kg payload ⊕ 900 kg payload		94015000	ø 255,0 x 67	
				92088000	ø 257 x 20 x 40.5	→Orga 9155 →2001-12-01 ⊕ 815 kg payload				
				92074003	ø 281 x 26 x 43.5	Orga 9156→ 2001-12-02→ ⊕ 815 kg payload ⊕ 900 kg payload				
EXPERT Box (VF3A_, VF3U_, VF3X_) 01/07→										
1.6 HDi 90 16V	01/07→	557900 66 / 90	Luc	2459501	[+] 24595 18.3		Luc	2457801	[–] 24578 16.6	⊕ rear disc brake

N - P

		kW / hp									
EXPERT Box (VF3A_, VF3U_, VF3X_) 01/07→											
557900			Luc		82073300			Luc		82073900	⊕ rear disc brake
1.6 HDi 90 16V	01/07→	66 / 90			92156900	ø 280 x 28 x 48.1	⊕ rear drum brake	Luc		91049600	ø 254 x 57
					92157000	ø 304 x 28 x 48	⊕ rear disc brake	Luc		97010300	⊕ rear drum brake
					TPM0012					84049601	bore ø 22.2 ø 254 x 57
										92157100	ø 290 x 14 x 49
										TPM0012	
										94032900	ø 254,0 x 68 ⊕ rear drum brake
558000			Luc		2459501	[+] 24595 18.3		Luc		2457801	[–] 24578 16.6 ⊕ rear disc brake
1.6 HDi 90 8V	01/07→	66 / 90			92156900	ø 280 x 28 x 48.1		Luc		91049600	ø 254 x 57 ⊕ rear disc brake
					92157000	ø 304 x 28 x 48				84049601	bore ø 22.2 ø 254 x 57 ⊕ rear drum brake
					TPM0012					92157100	ø 290 x 14 x 49 ⊕ rear disc brake
										TPM0012	
										94032900	ø 254,0 x 68 ⊕ rear drum brake
558100			Luc		2459501	[+] 24595 18.3		Luc		2457801	[–] 24578 16.6
2.0 16V	01/07→	103 / 140	Luc		82073300			Luc		82073900	
2.0 HDi 140	01/07→	100 / 136			92157000	ø 304 x 28 x 48				92157100	ø 290 x 14 x 49
2.0 HDi 165	09/09→	120 / 163			TPM0012					TPM0012	
558200			Luc		2459501	[+] 24595 18.3		Luc		2457801	[–] 24578 16.6
2.0 HDi 100	03/11→	72 / 98	Luc		82073300			Luc		82073900	
2.0 HDi 130	03/11→	94 / 128			92157000	ø 304 x 28 x 48				92157100	ø 290 x 14 x 49
558300			Luc		2459501	[+] 24595 18.3		Luc		2457801	[–] 24578 16.6
2.0 HDi 120	01/07→	88 / 120	Luc		82073300			Luc		82073900	
					92157000	ø 304 x 28 x 48				92157100	ø 290 x 14 x 49
					TPM0012						
EXPERT Kasten (222) 02/96→09/00 → EXPERT Box (222), Page 907											
EXPERT Kasten (VF3A_, VF3U_, VF3X_) 01/07→ → EXPERT Box (VF3A_, VF3U_, VF3X_), Page 907											
EXPERT Platform/Chassis (223) 02/96→10/06											
558400			Luc		2026101	[+] 20261 19.3	Orga 9793→ 2003-08-31→	Ben		91047800	ø 255 x 61
1.6	02/96→	58 / 79	Gir		2180101	[+] 21801 19.3	→Orga 9792 →2003-08-30	Ben		97009600	
1.9 D	02/96→	51 / 70	Luc		82055400			Ben		84047800	bore ø 19 ø 255 x 61
1.9 TD	02/96→	66 / 90	Gir		82059500		Orga 9793→ 2003-08-31→			94015000	ø 255,0 x 67
1.9 TD	02/96→	68 / 92	Luc		82063300		→Orga 9792 →2003-08-30				
			Luc		82063500		Orga 9793→ 2003-08-31→				
					92115000	ø 285 x 28 x 43.5	Orga 9793→ 2003-08-31→				
				PRO	92074003	ø 281 x 26 x 43.5	→Orga 9792 →2003-08-30				
558500			Luc		2026101	[+] 20261 19.3	Orga 9793→ 2003-08-31→	Luc		82055400	
1.9 D	06/98→11/03	51 / 69	Gir		2180101	[+] 21801 19.3	→Orga 9792 →2003-08-30	Ben		91047800	ø 255 x 61
			Luc		82055400			Ben		97009600	
			Gir		82059500		Orga 9793→ 2003-08-31→	Ben		84047800	bore ø 19 ø 255 x 61
			Luc		82063300		→Orga 9792 →2003-08-30			94015000	ø 255,0 x 67
			Luc		82063500		Orga 9793→ 2003-08-31→				

		kW / hp										
EXPERT Platform/Chassis (223) 02/96→10/06												
1.9 D	06/98→11/03	558500 51 / 69		92115000	ø 285 x 28 x 43.5	Orga 9793→ 2003-08-31→						
				92074003	ø 281 x 26 x 43.5	→Orga 9792 →2003-08-30						
2.0 HDi	10/00→10/06	558600 69 / 94	Luc	2026101	[+] 20261 19.3	Orga 9793→ 2003-08-31→	Ben	91047800	ø 255 x 61			
2.0 HDi	10/00→10/06	80 / 109	Gir	2180101	[+] 21801 19.3	→Orga 9792 →2003-08-30	Ben	97009600				
			Gir	82059500		Orga 9793→ 2003-08-31→	Ben	84047800	bore ø 19 ø 255 x 61			
			Luc	82063300		→Orga 9792 →2003-08-30		94015000	ø 255,0 x 67			
			Luc	82063500		Orga 9793→ 2003-08-31→						
				92115000	ø 285 x 28 x 43.5	Orga 9793→ 2003-08-31→						
				92074003	ø 281 x 26 x 43.5	→Orga 9792 →2003-08-30						
EXPERT Platform/Chassis 01/07→												
1.6 HDi 90	01/07→	558700 66 / 90	Luc	2459501	[+] 24595 18.3		Luc	2457801	[–] 24578 16.6	⊕ rear disc brake		
			Luc	82073300			Luc	82073900		⊕ rear disc brake		
				92156900	ø 280 x 28 x 48.1	⊕ rear drum brake	Luc	91049600	ø 254 x 57			
				92157000	ø 304 x 28 x 48	⊕ rear disc brake	Luc	97010300		⊕ rear drum brake		
				TPM0012				84049601	bore ø 22.2 ø 254 x 57			
								92157100	ø 290 x 14 x 49			
								TPM0012				
								94032900	ø 254,0 x 68	⊕ rear drum brake		
2.0 HDi 120	01/07→	558800 88 / 120	Luc	2459501	[+] 24595 18.3		Luc	2457801	[–] 24578 16.6			
			Luc	82073300			Luc	82073900				
				92157000	ø 304 x 28 x 48			92157100	ø 290 x 14 x 49			
				TPM0012								
2.0 HDi 140	01/07→	558900 100 / 136	Luc	2459501	[+] 24595 18.3		Luc	2457801	[–] 24578 16.6			
			Luc	82073300			Luc	82073900				
				92157000	ø 304 x 28 x 48			92157100	ø 290 x 14 x 49			
				TPM0012				TPM0012				
EXPERT Pritsche/Fahrgestell (223) 02/96→10/06 → EXPERT Platform/Chassis (223), Page 908												
EXPERT Pritsche/Fahrgestell 01/07→ → EXPERT Platform/Chassis, Page 909												
EXPERT Tepee (VF3V_) 01/07→												
1.6 HDi 90 16V	01/07→	559000 66 / 90	Luc	2459501	[+] 24595 18.3		Luc	2457801	[–] 24578 16.6	⊕ rear disc brake		
			Luc	82073300			Luc	82073900		⊕ rear disc brake		
				92156900	ø 280 x 28 x 48.1	⊕ rear drum brake	Luc	91049600	ø 254 x 57			
				92157000	ø 304 x 28 x 48	⊕ rear disc brake	Luc	97010300		⊕ rear drum brake		
				TPM0012				84049601	bore ø 22.2 ø 254 x 57			
								92157100	ø 290 x 14 x 49			
								TPM0012				
								94032900	ø 254,0 x 68	⊕ rear drum brake		
1.6 HDi 90 8V	01/07→	559100 66 / 90	Luc	2459501	[+] 24595 18.3		Luc	2457801	[–] 24578 16.6	⊕ rear disc brake		
				92156900	ø 280 x 28 x 48.1		Luc	91049600	ø 254 x 57	⊕ rear disc brake		
				92157000	ø 304 x 28 x 48			84049601	bore ø 22.2 ø 254 x 57	⊕ rear drum brake		
				TPM0012				92157100	ø 290 x 14 x 49	⊕ rear disc brake		

N - P

		kW / hp											
EXPERT Tepee (VF3V_) 01/07→													
		559100											
1.6 HDi 90 8V	01/07→	66 / 90								TPM0012		
										94032900	ø 254,0 x 68	⊕ rear drum brake
		559200	Luc		2459501	[+] 24595 18.3		Luc		2457801	[–] 24578 16.6	
2.0 16V	01/07→	103 / 140										
2.0 HDi 120	01/07→	88 / 120										
2.0 HDi 120 4x4	01/07→	88 / 120	Luc		82073300			Luc		82073900		
2.0 HDi 140	01/07→	100 / 136										
2.0 HDi 165	09/09→	120 / 163			92157000	ø 304 x 28 x 48				92157100	ø 290 x 14 x 49	
					TPM0012					TPM0012		
		559300	Luc		2459501	[+] 24595 18.3		Luc		2457801	[–] 24578 16.6	
2.0 HDi 100	03/11→	72 / 98										
2.0 HDi 130	03/11→	94 / 128	Luc		82073300			Luc		82073900		
					92157000	ø 304 x 28 x 48				92157100	ø 290 x 14 x 49	
EXPERT Van (222) 02/96→09/00 → EXPERT Box (222), Page 907													
GRAND RAID 04/08→ → PARTNER Tepee, Page 917													
GRAND RAID Caixa 04/08→ → PARTNER Box, Page 913													
GRAND RAID Combispace (5F) 06/96→10/06 → PARTNER Combispace (5F), Page 914													
GRAND RAID Kasten 04/08→ → PARTNER Box, Page 913													
GRAND RAID Limusina (5F) 06/96→10/06 → PARTNER Combispace (5F), Page 914													
HOGGAR 05/10→													
		559400	Luc		2334602	[–] 23346 19.3	Ø 266 mm	Luc		91052900	ø 228.6 x 41.5	
1.4	05/10→	59 / 80										
1.4 Flex	05/10→	60 / 82	Bos		2359703	[–] 23597 18	Ø 247 mm	Luc		97012000		
1.6	05/10→	81 / 110										
1.6 Flex	05/10→	83 / 113		PRO	92092803	ø 247 x 13 x 34.2				94010300	ø 229,0 x 50.5	
				PRO	92111503	ø 266 x 22 x 34						
ION 11/10→													
		559500	Sum		2442302	[+] 24423 14.7						
Electric	11/10→	35 / 48										
Electric	11/10→	47 / 64										
MANAGER Autobús 04/06→ → BOXER Bus, Page 903													
MANAGER Box 04/06→12/09 → BOXER Box, Page 900													
MANAGER Bus 04/06→ → BOXER Bus, Page 903													
MANAGER Caja/Chasis 04/06→ → BOXER Platform/Chassis, Page 905													
MANAGER Furgón 04/06→12/09 → BOXER Box, Page 900													
MANAGER Kasten 04/06→12/09 → BOXER Box, Page 900													
MANAGER Pritsche/Fahrgestell 04/06→ → BOXER Platform/Chassis, Page 905													
PARTNER Box (5) 04/96→10/06													
		559600	Luc		2334602	[–] 23346 19.3	Lucas vented disc Orga 9128→ 2001-11-04→	Luc		91052900	ø 228.6 x 41.5	⊕ rear drum brake
1.1	06/96→	44 / 60										
1.4	06/96→	55 / 75	Bos		2410101	[–] 24101 19	Bosch vented disc Orga 9128→ 2001-11-04→	Luc		97012000		⊕ rear drum brake
1.8 D	06/96→	43 / 58										
1.9 D	06/96→	51 / 69	Gir		2312401	[+] 23124 19.3	solid disc	Luc		84052900	bore ø 22.2 ø 228.6 x 41.5	⊕ rear drum brake
							Girling vented disc →Orga 9127 →2001-11-03					
					TPM0012							
			Bos		82054200					94010300	ø 229,0 x 50.5	⊕ rear drum brake
			Luc		82063300							
			Bos		82063800							
			Bos		82510100							
				PRO	92089103	ø 266 x 13 x 27.2	Girling					
				PRO	92048103	ø 266 x 20.5 x 27.4	Girling/Lucas →Orga 10983 →2006-12-04					
				PRO	92111503	ø 266 x 22 x 34	Bosch Orga 9128→ 2001-11-04→					
							Lucas Orga 10984→ 2006-12-04→					
					TPM0012							
		559700	Luc		2334602	[–] 23346 19.3	Lucas vented disc	Luc		91052900	ø 228.6 x 41.5	⊕ rear drum brake
1.4	11/02→10/06	54 / 73										
			Bos		2410101	[–] 24101 19	Bosch vented disc	Luc		97012000		⊕ rear drum brake

PARTNER Box (5) 04/96→10/06

			kW / hp										
1.4	11/02→10/06	559700	54 / 73	Gir		2312401	[+] 23124 19.3	solid disc	Luc		84052900	bore ø 22.2 ø 228.6 x 41.5	⊕ rear drum brake
				Bos		82054200					TPM0012		
				Luc		82063300					94010300	ø 229,0 x 50.5	⊕ rear drum brake
				Bos		82063800							
				Bos		82510100							
					PRO	92089103	ø 266 x 13 x 27.2	Girling					
					PRO	92048103	ø 266 x 20.5 x 27.4	Girling/Lucas					
					PRO	92111503	ø 266 x 22 x 34	Bosch					
1.4 BiFuel 1.9 D 4x4	04/03→ 04/04→	559800	55 / 75 51 / 69	Luc		2334602	[–] 23346 19.3	Lucas vented disc	Luc		91052900	ø 228.6 x 41.5	⊕ rear drum brake
				Bos		2410101	[–] 24101 19	Bosch vented disc	Luc		97012000		⊕ rear drum brake
				Gir		2312401	[+] 23124 19.3	solid disc	Luc		84052900	bore ø 22.2 ø 228.6 x 41.5	⊕ rear drum brake
				Bos		82054200					TPM0012		
				Luc		82063300					94010300	ø 229,0 x 50.5	⊕ rear drum brake
				Bos		82063800							
				Bos		82510100							
					PRO	92089103	ø 266 x 13 x 27.2	Girling					
					PRO	92048103	ø 266 x 20.5 x 27.4	Girling/Lucas →Orga 10983 →2006-12-04					
					PRO	92111503	ø 266 x 22 x 34	Bosch Lucas Orga 10984→ 2006-12-04→					
						TPM0012							
1.6	09/00→10/02	559900	80 / 109	Luc		2334602	[–] 23346 19.3	Lucas vented disc Orga 9128→ 2001-11-04→	Luc		91052900	ø 228.6 x 41.5	⊕ rear drum brake
				Bos		2410101	[–] 24101 19	Bosch vented disc Orga 9128→ 2001-11-04→	Luc		97012000		⊕ rear drum brake
				Gir		2312401	[+] 23124 19.3	solid disc Girling vented disc →Orga 9127 →2001-11-03	Luc		84052900	bore ø 22.2 ø 228.6 x 41.5	⊕ rear drum brake
				Bos		82054200					TPM0012		
				Luc		82063300					94010300	ø 229,0 x 50.5	⊕ rear drum brake
				Bos		82063800							
				Bos		82510100							
					PRO	92089103	ø 266 x 13 x 27.2	Girling					
					PRO	92048103	ø 266 x 20.5 x 27.4	Girling/Lucas →Orga 10983 →2006-12-04					
					PRO	92111503	ø 266 x 22 x 34	Bosch Orga 9128→ 2001-11-04→ Lucas Orga 10984→ 2006-12-04→					
1.6 Bioflex	09/00→10/02	560000	80 / 109	Luc		2334602	[–] 23346 19.3	Lucas vented disc Orga 9128→ 2001-11-04→	Luc		91052900	ø 228.6 x 41.5	⊕ rear drum brake
				Bos		2410101	[–] 24101 19	Bosch vented disc Orga 9128→ 2001-11-04→	Luc		97012000		⊕ rear drum brake
				Gir		2312401	[+] 23124 19.3	solid disc Girling vented disc →Orga 9127 →2001-11-03	Luc		84052900	bore ø 22.2 ø 228.6 x 41.5	⊕ rear drum brake
				Bos		82054200					94010300	ø 229,0 x 50.5	⊕ rear drum brake
				Luc		82063300							
				Bos		82063800							
				Bos		82510100							
					PRO	92089103	ø 266 x 13 x 27.2	Girling					
					PRO	92048103	ø 266 x 20.5 x 27.4	Girling/Lucas →Orga 10983 →2006-12-04					

N - P

PARTNER Box (5) 04/96→10/06

		kW / hp												
1.6 Bioflex	09/00→10/02	560000 80 / 109		PRO	92111503	ø 266 x 22 x 34	Bosch Orga 9128→ 2001-11-04→ Lucas Orga 10984→ 2006-12-04→							
1.6 HDi 75	02/06→	560100 55 / 75	Luc		2334602	[–] 23346 19.3	Lucas vented disc	Luc		2355402	[–] 23554 17.2	95 000 000→ ⊕ ESP
			Bos		2410101	[–] 24101 19	Bosch vented disc	Luc	epad	2355481	[–] 23554 17.2	95 000 000→ ⊕ ESP
			Gir		2312401	[+] 23124 19.3	solid disc	Luc		82037300		
			Bos		82054200			Luc		82062800		
			Luc		82063300			Luc		91052900	ø 228.6 x 41.5	→60 999 999
			Bos		82063800			Luc		97012000		→60 999 999
			Bos		82510100			Luc		84052900	bore ø 22.2 ø 228.6 x 41.5	→60 999 999
				PRO	92048103	ø 266 x 20.5 x 27.4	Girling/Lucas →Orga 10983 →2006-12-04		PRO	92111703	ø 246.5 x 9 x 35	95 000 000→ ⊕ ESP
				PRO	92111503	ø 266 x 22 x 34	Bosch Lucas Orga 10984→ 2006-12-04→			TPM0012		
					TPM0012					94010300	ø 229,0 x 50.5	→60 999 999
1.6 HDi 90	02/06→	560200 66 / 90	Luc		2334602	[–] 23346 19.3	Lucas vented disc	Luc		2355402	[–] 23554 17.2	95 000 000→ ⊕ ESP
			Bos		2410101	[–] 24101 19	Bosch vented disc Orga 9128→ 2001-11-04→	Luc	epad	2355481	[–] 23554 17.2	95 000 000→ ⊕ ESP
			Gir		2312401	[+] 23124 19.3	solid disc	Luc		82037300		
			Bos		82054200			Luc		82062800		
			Luc		82063300			Luc		91052900	ø 228.6 x 41.5	→60 999 999
			Bos		82063800			Luc		97012000		→60 999 999
			Bos		82510100			Luc		84052900	bore ø 22.2 ø 228.6 x 41.5	→60 999 999
				PRO	92089103	ø 266 x 13 x 27.2	Girling		PRO	92111703	ø 246.5 x 9 x 35	95 000 000→ ⊕ ESP
				PRO	92048103	ø 266 x 20.5 x 27.4	Girling/Lucas →Orga 10983 →2006-12-04			TPM0012		
				PRO	92111503	ø 266 x 22 x 34	Bosch Lucas Orga 10984→ 2006-12-04→			94010300	ø 229,0 x 50.5	→60 999 999
					TPM0012							
1.8	03/97→08/00	560300 66 / 90	Gir		2312401	[+] 23124 19.3	solid disc	Luc		91052900	ø 228.6 x 41.5	⊕ rear drum brake
			Bos		82054200			Luc		97012000		⊕ rear drum brake
			Luc		82063300			Luc		84052900	bore ø 22.2 ø 228.6 x 41.5	⊕ rear drum brake
			Bos		82063800					94010300	ø 229,0 x 50.5	⊕ rear drum brake
			Bos		82510100							
				PRO	92089103	ø 266 x 13 x 27.2	Girling					
				PRO	92111503	ø 266 x 22 x 34	Lucas Orga 10984→ 2006-12-04→					
1.9 D	06/96→	560400 51 / 69	Luc		2334602	[–] 23346 19.3	Lucas vented disc Orga 9128→ 2001-11-04→	Luc		91052900	ø 228.6 x 41.5	⊕ rear drum brake
			Bos		2410101	[–] 24101 19	Bosch vented disc Orga 9128→ 2001-11-04→	Luc		97012000		⊕ rear drum brake
			Gir		2312401	[+] 23124 19.3	solid disc Girling vented disc →Orga 9127 →2001-11-03	Luc		84052900	bore ø 22.2 ø 228.6 x 41.5	→60 999 999
			Bos		82054200					TPM0012		
			Luc		82063300					94010300	ø 229,0 x 50.5	⊕ rear drum brake
			Bos		82063800							
			Bos		82510100							
				PRO	92089103	ø 266 x 13 x 27.2	Girling					
				PRO	92048103	ø 266 x 20.5 x 27.4	Girling/Lucas →Orga 10983 →2006-12-04					

N - P

PARTNER Box (5) 04/96→10/06

		kW / hp											
1.9 D	06/96→	560400 51 / 69		PRO	92111503	ø 266 x 22 x 34	Bosch Orga 9128→ 2001-11-04→ Lucas Orga 10984→ 2006-12-04→						
					TPM0012								
2.0 HDi	04/00→	560500 66 / 90	Luc		2334602	[–] 23346 19.3	Lucas vented disc Orga 9128→ 2001-11-04→	Luc		2355402	[–] 23554 17.2	95 000 000→ ⊕ ESP	
			Bos		2410101	[–] 24101 19	Bosch vented disc Orga 9128→ 2001-11-04→	Luc	epad	2355481	[–] 23554 17.2	95 000 000→ ⊕ ESP	
			Gir		2312401	[+] 23124 19.3	solid disc Girling vented disc →Orga 9127 →2001-11-03	Luc		82037300			
			Bos		82054200			Luc		82062800			
			Luc		82063300			Luc		91052900	ø 228.6 x 41.5	→60 999 999	
			Bos		82063800			Luc		97012000		→60 999 999	
			Bos		82510100			Luc		84052900	bore ø 22.2 ø 228.6 x 41.5	→60 999 999	
				PRO	92089103	ø 266 x 13 x 27.2	Girling		PRO	92111703	ø 246.5 x 9 x 35	95 000 000→ ⊕ ESP	
				PRO	92048103	ø 266 x 20.5 x 27.4	Girling/Lucas →Orga 10983 →2006-12-04			TPM0012			
				PRO	92111503	ø 266 x 22 x 34	Bosch Orga 9128→ 2001-11-04→ Lucas Orga 10984→ 2006-12-04→			94010300	ø 229,0 x 50.5	→60 999 999	
					TPM0012								
2.0 HDi 4x4	04/04→	560600 66 / 90	Luc		2334602	[–] 23346 19.3	Lucas vented disc	Luc		2355402	[–] 23554 17.2	95 000 000→ ⊕ ESP	
			Bos		2410101	[–] 24101 19	Bosch vented disc	Luc	epad	2355481	[–] 23554 17.2	95 000 000→ ⊕ ESP	
			Gir		2312401	[+] 23124 19.3	solid disc	Luc		82037300			
			Bos		82054200			Luc		82062800			
			Luc		82063300			Luc		91052900	ø 228.6 x 41.5	→60 999 999	
			Bos		82063800			Luc		97012000		→60 999 999	
			Bos		82510100			Luc		84052900	bore ø 22.2 ø 228.6 x 41.5	→60 999 999	
				PRO	92089103	ø 266 x 13 x 27.2	Girling		PRO	92111703	ø 246.5 x 9 x 35	95 000 000→ ⊕ ESP	
				PRO	92048103	ø 266 x 20.5 x 27.4	Girling/Lucas →Orga 10983 →2006-12-04			TPM0012			
				PRO	92111503	ø 266 x 22 x 34	Bosch Lucas Orga 10984→ 2006-12-04→			94010300	ø 229,0 x 50.5	→60 999 999	
					TPM0012								
Electric	04/96→12/02	560700 25 / 34	Luc		2334602	[–] 23346 19.3	Lucas vented disc Orga 9128→ 2001-11-04→	Luc		91052900	ø 228.6 x 41.5		
			Bos		2410101	[–] 24101 19	Bosch vented disc Orga 9128→ 2001-11-04→	Luc		97012000			
			Gir		2312401	[+] 23124 19.3	solid disc Girling vented disc →Orga 9127 →2001-11-03	Luc		84052900	bore ø 22.2 ø 228.6 x 41.5		
			Bos		82054200					TPM0012			
			Luc		82063300					94010300	ø 229,0 x 50.5		
			Bos		82063800								
			Bos		82510100								
				PRO	92089103	ø 266 x 13 x 27.2	Girling						
				PRO	92048103	ø 266 x 20.5 x 27.4	Girling/Lucas →Orga 10983 →2006-12-04						
				PRO	92111503	ø 266 x 22 x 34	Bosch Orga 9128→ 2001-11-04→ Lucas Orga 10984→ 2006-12-04→						

PARTNER Box 04/08→

1.6	04/08→	560800 66 / 90	Ate		2453801	[–] 24538 18.8		Luc		2476501	[–] 24765 16.6	⊕ rear disc brake	
1.6 HDi	04/08→	55 / 75											
1.6 HDi	04/08→	66 / 90	Ate		82032000			Luc		82075400		⊕ rear disc brake	

N - P

kW / hp												
PARTNER Box 04/08→												
560800												
1.6	04/08→	66 / 90	Ate		82062900			Luc		82063300		⊕ rear disc brake
1.6 HDi	04/08→	55 / 75		PRO	92111603	ø 283 x 26 x 34		Luc		91052900	ø 228.6 x 41.5	⊕ rear drum brake
1.6 HDi	04/08→	66 / 90			TPM0012				ABS	92168700	ø 268 x 12 x 73.2	⊕ rear disc brake
										94010300	ø 229,0 x 50.5	⊕ rear drum brake
560900			Ate		2453801	[–] 24538 18.8		Luc		2476501	[–] 24765 16.6	
1.6	04/08→	80 / 109										
1.6	04/10→	88 / 120	Ate		82032000			Luc		82075400		
1.6	11/10→	72 / 98										
1.6 Flex	09/08→	81 / 110	Ate		82062900			Luc		82063300		
1.6 HDi	04/08→	80 / 109										
1.6 HDi	08/10→	82 / 112		PRO	92111603	ø 283 x 26 x 34			ABS	92168700	ø 268 x 12 x 73.2	
1.6 HDi 90	04/10→	68 / 92										
					TPM0012							
561000			Bos		2410101	[–] 24101 19		Luc		2355402	[–] 23554 17.2	⊕ rear disc brake
1.6 HDi	09/09→12/12	67 / 91										
1.6 HDi 4x4	04/12→	66 / 90		PRO	92111503	ø 266 x 22 x 34		Luc	epad	2355481	[–] 23554 17.2	⊕ rear disc brake
					TPM0012			Luc		91052900	ø 228.6 x 41.5	⊕ rear drum brake
								Luc		97012000		⊕ rear drum brake
								Luc		84052900	bore ø 22.2 ø 228.6 x 41.5	⊕ rear drum brake
									PRO	92111703	ø 246.5 x 9 x 35	⊕ rear disc brake
										TPM0012		
										94010300	ø 229,0 x 50.5	⊕ rear drum brake
561100			Ate		2453801	[–] 24538 18.8		Luc		2476501	[–] 24765 16.6	
1.6 HDi	03/13→	84 / 114										
Électrique	06/13→	49 / 67	Ate		82032000				ABS	92168700	ø 268 x 12 x 73.2	
				PRO	92111603	ø 283 x 26 x 34						
					TPM0012							
PARTNER Combispace (5F) 06/96→10/06												
561200			Luc		2334602	[–] 23346 19.3	Lucas vented disc Orga 9128→ 2001-11-04→	Luc		91052900	ø 228.6 x 41.5	⊕ rear drum brake
1.1	06/96→	44 / 60										
1.4	06/96→	55 / 75	Bos		2410101	[–] 24101 19	Bosch vented disc Orga 9128→ 2001-11-04→	Luc		97012000		⊕ rear drum brake
1.8	05/97→	66 / 90										
1.9 D	06/96→	50 / 68	Gir		2312401	[+] 23124 19.3	solid disc	Luc		84052900	bore ø 22.2 ø 228.6 x 41.5	⊕ rear drum brake
1.9 D	12/98→	51 / 69					Girling vented disc →Orga 9127 →2001-11-03					
			Bos		82054200					TPM0012		
			Luc		82063300					94010300	ø 229,0 x 50.5	⊕ rear drum brake
			Bos		82063800							
			Bos		82510100							
				PRO	92089103	ø 266 x 13 x 27.2	Girling					
				PRO	92048103	ø 266 x 20.5 x 27.4	Girling/Lucas →Orga 10983 →2006-12-04					
				PRO	92111503	ø 266 x 22 x 34	Bosch Orga 9128→ 2001-11-04→					
							Lucas Orga 10984→ 2006-12-04→					
					TPM0012							
561300			Luc		2334602	[–] 23346 19.3	Lucas vented disc	Luc		91052900	ø 228.6 x 41.5	⊕ rear drum brake
1.4	11/02→10/06	54 / 73										
1.9 D 4x4	04/04→08/05	51 / 69	Bos		2410101	[–] 24101 19	Bosch vented disc	Luc		97012000		⊕ rear drum brake
			Gir		2312401	[+] 23124 19.3	solid disc	Luc		84052900	bore ø 22.2 ø 228.6 x 41.5	⊕ rear drum brake
			Bos		82054200					TPM0012		
			Luc		82063300					94010300	ø 229,0 x 50.5	⊕ rear drum brake
			Bos		82063800							

PARTNER Combispace (5F) 06/96→10/06

561300													
1.4	11/02→10/06	54 / 73	Bos		82510100								
1.9 D 4x4	04/04→08/05	51 / 69		PRO	92089103	ø 266 x 13 x 27.2	Girling						
				PRO	92048103	ø 266 x 20.5 x 27.4	Girling/Lucas						
				PRO	92111503	ø 266 x 22 x 34	Bosch						
					TPM0012								
561400			Luc		2334602	[–] 23346 19.3	TRW Orga 1098477→ 12/06→	Luc		91052900	ø 228.6 x 41.5	⊕ rear drum brake	
1.4	10/05→	48 / 65	Bos		2410101	[–] 24101 19		Luc		97012000		⊕ rear drum brake	
			Gir		2312401	[+] 23124 19.3	→Orga 09127	Luc		84052900	bore ø 22.2 ø 228.6 x 41.5	⊕ rear drum brake	
				PRO	92089103	ø 266 x 13 x 27.2	GIRLING -brake			TPM0012			
				PRO	92048103	ø 266 x 20.5 x 27.4	Orga 10983→ 12/06→			94010300	ø 229,0 x 50.5	⊕ rear drum brake	
				PRO	92111503	ø 266 x 22 x 34	TRW Orga 1098477→ 12/06→						
561500			Luc		2334602	[–] 23346 19.3	Lucas vented disc Orga 9128→ 2001-11-04→	Luc		2355402	[–] 23554 17.2	95 000 000→ ⊕ ESP	
1.6 16V	07/01→	80 / 109	Bos		2410101	[–] 24101 19	Bosch vented disc Orga 9128→ 2001-11-04→	Luc	epad	2355481	[–] 23554 17.2	95 000 000→ ⊕ ESP	
2.0 HDI	02/00→	66 / 90	Gir		2312401	[+] 23124 19.3	solid disc Girling vented disc →Orga 9127 →2001-11-03	Luc		82037300			
			Bos		82054200			Luc		82062800			
			Luc		82063300			Luc		91052900	ø 228.6 x 41.5	→60 999 999	
			Bos		82063800			Luc		97012000		→60 999 999	
			Bos		82510100			Luc		84052900	bore ø 22.2 ø 228.6 x 41.5	→60 999 999	
				PRO	92089103	ø 266 x 13 x 27.2	Girling		PRO	92111703	ø 246.5 x 9 x 35	95 000 000→ ⊕ ESP	
				PRO	92048103	ø 266 x 20.5 x 27.4	Girling/Lucas →Orga 10983 →2006-12-04			TPM0012			
				PRO	92111503	ø 266 x 22 x 34	Bosch Orga 9128→ 2001-11-04→ Lucas Orga 10984→ 2006-12-04→			94010300	ø 229,0 x 50.5	→60 999 999	
					TPM0012								
561600			Luc		2334602	[–] 23346 19.3	TRW Orga 1098477→ 12/06→ GIRLING Orga 0912877→ 11/01→	Luc		91052900	ø 228.6 x 41.5	⊕ rear drum brake	
1.6 Flexfuel	09/00→	80 / 109	Bos		2410101	[–] 24101 19	Orga 09128→ 11/01→	Luc		97012000		⊕ rear drum brake	
			Gir		2312401	[+] 23124 19.3	→Orga 09127	Luc		84052900	bore ø 22.2 ø 228.6 x 41.5	⊕ rear drum brake	
				PRO	92089103	ø 266 x 13 x 27.2	GIRLING -brake			TPM0012			
				PRO	92048103	ø 266 x 20.5 x 27.4	Orga 10983→ 12/06→			94010300	ø 229,0 x 50.5	⊕ rear drum brake	
				PRO	92111503	ø 266 x 22 x 34	TRW Orga 1098477→ 12/06→ BOSCH Orga 09128→ 11/01→						
561700			Luc		2334602	[–] 23346 19.3	Lucas vented disc	Luc		2355402	[–] 23554 17.2	95 000 000→ ⊕ ESP	
1.6 HDi 75	02/06→	55 / 75	Bos		2410101	[–] 24101 19	Bosch vented disc	Luc	epad	2355481	[–] 23554 17.2	95 000 000→ ⊕ ESP	
			Gir		2312401	[+] 23124 19.3	solid disc	Luc		82037300			
			Bos		82054200			Luc		82062800			
			Luc		82063300			Luc		91052900	ø 228.6 x 41.5	→60 999 999	
			Bos		82063800			Luc		97012000		→60 999 999	
			Bos		82510100			Luc		84052900	bore ø 22.2 ø 228.6 x 41.5	→60 999 999	
				PRO	92048103	ø 266 x 20.5 x 27.4	Girling/Lucas →Orga 10983 →2006-12-04		PRO	92111703	ø 246.5 x 9 x 35	95 000 000→ ⊕ ESP	
				PRO	92111503	ø 266 x 22 x 34	Bosch Lucas Orga 10984→ 2006-12-04→			TPM0012			
					TPM0012					94010300	ø 229,0 x 50.5	→60 999 999	

N - P

		kW / hp											
PARTNER Combispace (5F) 06/96→10/06													
		561800	Luc		2334602	[–] 23346 19.3	Lucas vented disc	Luc		2355402	[–] 23554 17.2	95 000 000→ ⊕ ESP
1.6 HDi 90	02/06→	66 / 90	Bos		2410101	[–] 24101 19	Bosch vented disc	Luc	epad	2355481	[–] 23554 17.2	95 000 000→ ⊕ ESP
			Gir		2312401	[+] 23124 19.3	solid disc	Luc		82037300		
			Bos		82054200			Luc		82062800		
			Luc		82063300			Luc		91052900	ø 228.6 x 41.5	→60 999 999
			Bos		82063800			Luc		97012000		→60 999 999
			Bos		82510100			Luc		84052900	bore ø 22.2 ø 228.6 x 41.5	→60 999 999
				PRO	92089103	ø 266 x 13 x 27.2	Girling		PRO	92111703	ø 246.5 x 9 x 35	95 000 000→ ⊕ ESP
				PRO	92048103	ø 266 x 20.5 x 27.4	Girling/Lucas →Orga 10983 →2006-12-04			TPM0012		
				PRO	92111503	ø 266 x 22 x 34	Bosch Lucas Orga 10984→ 2006-12-04→			94010300	ø 229,0 x 50.5	→60 999 999
					TPM0012							
		561900	Luc		2334602	[–] 23346 19.3	Lucas vented disc	Luc		2355402	[–] 23554 17.2	95 000 000→ ⊕ ESP
2.0 HDi 4x4	04/04→08/05	66 / 90	Bos		2410101	[–] 24101 19	Bosch vented disc	Luc	epad	2355481	[–] 23554 17.2	95 000 000→ ⊕ ESP
			Gir		2312401	[+] 23124 19.3	solid disc	Luc		82037300		
			Bos		82054200			Luc		82062800		
			Luc		82063300			Luc		91052900	ø 228.6 x 41.5	→60 999 999
			Bos		82063800			Luc		97012000		→60 999 999
			Bos		82510100			Luc		84052900	bore ø 22.2 ø 228.6 x 41.5	→60 999 999
				PRO	92089103	ø 266 x 13 x 27.2	Girling		PRO	92111703	ø 246.5 x 9 x 35	95 000 000→ ⊕ ESP
				PRO	92048103	ø 266 x 20.5 x 27.4	Girling/Lucas			TPM0012		
				PRO	92111503	ø 266 x 22 x 34	Bosch			94010300	ø 229,0 x 50.5	→60 999 999
					TPM0012							
		562000	Luc		2334602	[–] 23346 19.3	Lucas vented disc Orga 9128→ 2001-11-04→	Luc		91052900	ø 228.6 x 41.5	
Electric	01/98→12/01	28 / 38	Bos		2410101	[–] 24101 19	Bosch vented disc Orga 9128→ 2001-11-04→	Luc		97012000		
			Gir		2312401	[+] 23124 19.3	solid disc Girling vented disc →Orga 9127 →2001-11-03	Luc		84052900	bore ø 22.2 ø 228.6 x 41.5	
			Bos		82054200					TPM0012		
			Luc		82063300					94010300	ø 229,0 x 50.5	
			Bos		82063800							
			Bos		82510100							
				PRO	92089103	ø 266 x 13 x 27.2	Girling					
				PRO	92048103	ø 266 x 20.5 x 27.4	Girling/Lucas →Orga 10983 →2006-12-04					
				PRO	92111503	ø 266 x 22 x 34	Bosch Orga 9128→ 2001-11-04→ Lucas Orga 10984→ 2006-12-04→					
PARTNER Kasten (5) 04/96→10/06 → PARTNER Box (5), Page 910													
PARTNER Kasten 04/08→ → PARTNER Box, Page 913													
PARTNER Platform/Chassis 01/09→													
		562100	Ate		2453801	[–] 24538 18.8		Luc		2476501	[–] 24765 16.6	
1.6 HDi	01/09→	55 / 75										
1.6 HDi	01/09→	66 / 90	Ate		82032000			Luc		82075400		
			Ate		82062900			Luc		82063300		
				PRO	92111603	ø 283 x 26 x 34			ABS	92168700	ø 268 x 12 x 73.2	

		kW / hp											
PARTNER Platform/Chassis 01/09→													
		562100		TPM0012									
1.6 HDi	01/09→	55 / 75											
1.6 HDi	01/09→	66 / 90											
PARTNER Pritsche/Fahrgestell 01/09→ → PARTNER Platform/Chassis, Page 916													
PARTNER Tepee 04/08→													
		562200	Ate	2453801	[–] 24538 18.8		Luc	2476501	[–] 24765 16.6	⊕ rear disc brake			
1.6	04/08→	66 / 90											
1.6 HDi	04/08→	66 / 90	Ate	82032000			Luc	82075400		⊕ rear disc brake			
			Ate	82062900			Luc	82063300		⊕ rear disc brake			
				92111603	ø 283 x 26 x 34		Luc	91052900	ø 228.6 x 41.5	⊕ rear drum brake			
				TPM0012				92168700	ø 268 x 12 x 73.2	⊕ rear disc brake			
								94010300	ø 229,0 x 50.5	⊕ rear drum brake			
		562300	Ate	2453801	[–] 24538 18.8		Luc	2476501	[–] 24765 16.6				
1.6	04/08→	78 / 106											
1.6	04/08→	80 / 109	Ate	82032000			Luc	82075400					
1.6	09/08→	81 / 110											
1.6	09/08→	81 / 110	Ate	82062900			Luc	82063300					
1.6	04/10→	88 / 120											
1.6	08/10→	72 / 98											
1.6 Flex	09/08→	81 / 110		92111603	ø 283 x 26 x 34			92168700	ø 268 x 12 x 73.2				
1.6 HDi	04/08→	55 / 75											
1.6 HDi	04/08→	80 / 109											
1.6 HDi	08/10→	82 / 112		TPM0012									
1.6 HDi 90	04/10→	68 / 92											
		562400	Ate	2453801	[–] 24538 18.8		Luc	2476501	[–] 24765 16.6				
1.6 HDi	03/13→	84 / 114											
			Ate	82032000				92168700	ø 268 x 12 x 73.2				
				92111603	ø 283 x 26 x 34								
				TPM0012									
PARTNER Van (5) 04/96→10/06 → PARTNER Box (5), Page 910													
RANCH 04/08→ → PARTNER Tepee, Page 917													
RANCH Combispace (5F) 06/96→10/06 → PARTNER Combispace (5F), Page 914													
RANCH Furgonato (5) 04/96→10/06 → PARTNER Box (5), Page 910													
RANCH Furgonato 04/08→ → PARTNER Box, Page 913													
RANCH Kasten (5) 04/96→10/06 → PARTNER Box (5), Page 910													
RANCH Kasten 04/08→ → PARTNER Box, Page 913													
RANCH MPV / Space wagon (5F) 06/96→10/06 → PARTNER Combispace (5F), Page 914													
RCZ 03/10→													
		562500	Ate	2507001	[o] 25070 17		Luc	2492201	[–] 24922 17.3				
1.6	09/11→	149 / 203											
			Ate	82517900				92129603	ø 290 x 12 x 35				
				TPM0012				TPM0012					
		562600	Ate	2358901	[–] 23589 19		Luc	2492201	[–] 24922 17.3				
1.6 16V	03/10→	115 / 156											
			Ate	82032000			Luc	82504400					
			Ate	82062900			Luc	82063300					
				TPM0012				92129603	ø 290 x 12 x 35				
								TPM0012					
		562700	Ate	2506901	[+] 25069 17		Luc	2492201	[–] 24922 17.3				
1.6 16V	06/10→	147 / 200											
			Ate	82062900			Luc	82504400					
			Ate	82517900			Luc	82063300					
				TPM0012				92129603	ø 290 x 12 x 35				
								TPM0012					
		562800	Ate	2358901	[–] 23589 19		Luc	2492201	[–] 24922 17.3				
1.6 16V	01/11→	121 / 165											
			Ate	82032000				92129603	ø 290 x 12 x 35				
				TPM0012				TPM0012					

N - P

			kW / hp										
RCZ 03/10→													
		562900			TPM0012			Luc		2492201	[–] 24922 17.3	
1.6 THP 270	06/13→	199 / 270							PRO	92129603	ø 290 x 12 x 35	
										TPM0012		
		563000	Ate		2358901	[–] 23589 19	Ø 302 mm	Luc		2492201	[–] 24922 17.3	
2.0 HDi	03/10→	120 / 163	Ate		2506901	[+] 25069 17	Ø 340 mm	Luc		82504400		
			Ate		82032000		Ø 302 mm	Luc		82063300		
			Ate		82062900				PRO	92129603	ø 290 x 12 x 35	
			Ate		82517900		Ø 340 mm			TPM0012		
					TPM0012							

PIAGGIO

PIAGGIO

			kW / hp										
APE TRUCK Pritsche/Fahrgestell 07/94→ → PORTER Platform/Chassis, Page 918													
M500 01/04→													
		563100	Ate		2473001	[+] 24730 10.2							
0.5 D	01/04→	4 / 5											
PORTER Box 07/94→													
		563200	Sum		2078001	[–] 20780 13.4							
1.0	07/94→07/02	35 / 48											
1.2 D	05/95→	26 / 35			92112600	ø 210 x 16 x 37							
1.2 D	01/11→	47 / 64											
1.3	01/11→	52 / 71											
1.3	01/11→	53 / 72											
1.3 16V	06/98→	48 / 65											
1.3 16V 4x4	06/98→	48 / 65											
1.3 i 16V	05/98→	48 / 65											
1.3 i 16V 4x4	05/98→	48 / 65											
1.3 LPG	01/11→	52 / 71											
1.3 LPG	01/11→	53 / 72											
1.3 LPG 16V	06/98→	48 / 64											
1.4 D	04/98→	28 / 38											
ELECTRO	06/98→	11 / 15											
Elektro	01/11→	18 / 24											
PORTER Bus 02/93→													
		563300	Sum		2078001	[–] 20780 13.4							
1.0	02/93→06/04	33 / 45											
1.0	07/94→07/02	35 / 48			92112600	ø 210 x 16 x 37							
1.2 D	01/11→	47 / 64											
1.3	01/11→	52 / 71											
1.3	01/11→	53 / 72											
1.3 LPG	01/11→	52 / 71											
1.3 LPG	01/11→	53 / 72											
Elektro	01/95→	11 / 15											
Elektro	01/11→	18 / 24											
PORTER Dumptruck 01/11→													
		563400	Sum		2078001	[–] 20780 13.4							
1.2 D	01/11→	47 / 64											
1.3	01/11→	52 / 71			92112600	ø 210 x 16 x 37							
1.3	01/11→	53 / 72											
1.3 LPG	01/11→	52 / 71											
1.3 LPG	01/11→	53 / 72											
Elektro	01/11→	18 / 24											
PORTER Kasten 07/94→ → PORTER Box, Page 918													
PORTER Kipper 01/11→ → PORTER Dumptruck, Page 918													
PORTER Platform/Chassis 07/94→													
		563500	Sum		2078001	[–] 20780 13.4							
0.5 D	06/08→	8 / 11											
0.9 D	06/08→	13 / 18			92112600	ø 210 x 16 x 37							
1.0	07/94→	35 / 48											
1.2 D	05/95→	26 / 35											
1.2 D	01/11→	47 / 64											
1.3	01/11→	52 / 71											
1.3	01/11→	53 / 72											
1.3 16V	06/98→	48 / 65											
1.3 16V 4x4	06/98→	48 / 65											
1.3 CNG	01/11→	52 / 71											
1.3 i 16V	05/98→	48 / 65											
1.3 i 16V 4x4	05/98→	48 / 65											
1.3 LPG	01/11→	52 / 71											
1.3 LPG	01/11→	53 / 72											
1.3 LPG 16V	06/98→	48 / 64											
1.4 D	04/98→	28 / 38											
ELECTRIC	06/98→	11 / 15											
Elektro	01/11→	18 / 24											
PORTER Pritsche/Fahrgestell 07/94→ → PORTER Platform/Chassis, Page 918													

		kW / hp											
BREEZE 12/95→04/01													
		563600							Kel		2356102	[–] 23561 17	
2.0 16V	12/95→04/01	98 / 133											
2.4 16V	12/95→04/01	103 / 140											
2.4 16V	12/95→04/01	112 / 152											
NEON II Saloon 08/99→													
		563700	Kel		2304301	[–] 23043 18.6			Kel		2356102	[–] 23561 17	
2.0 16V	08/99→	98 / 133											
2.0 16V	09/99→	112 / 152		PRO	92152403	ø 257 x 20 x 38					92108600	ø 270 x 9 x 53.3	
NEON II Stufenheck 08/99→ → NEON II Saloon, Page 919													
NEON Coupe 10/94→09/99													
		563800	Kel		2304301	[–] 23043 18.6					91063800	ø 200 x 34	⊕ rear drum brake
2.0	10/94→09/99	98 / 133											
2.0	10/94→09/99	107 / 145	Kel		2374001	[–] 23740 15.5							
NEON Saloon 05/94→08/99													
		563900	Kel		2304301	[–] 23043 18.6			Kel		2356102	[–] 23561 17	⊕ rear disc brake 09/97→
2.0 16V	05/94→08/99	98 / 133											
2.0 16V	06/94→08/99	107 / 145	Kel		2374001	[–] 23740 15.5					91063800	ø 200 x 34	⊕ rear drum brake
2.0 16V	04/96→08/99	112 / 152											
NEON Stufenheck 05/94→08/99 → NEON Saloon, Page 919													
VOYAGER / GRAN VOYAGER 01/95→03/01													
		564000	Kel		2304301	[–] 23043 18.6	10/96→		Kel		2510801	[–] 25108 15.9	⊕ ABS 10/96→
2.0 i	01/95→03/01	98 / 133											
2.4 i	01/95→03/01	111 / 151	Kel		2495301	[–] 24593 16.5	→09/96				91056000	ø 250 x 57	
2.5 TD	01/95→03/01	85 / 116											
3.0	01/95→03/01	112 / 152											
3.3 i	01/95→03/01	116 / 158			92108700	ø 282.5 x 23.7 x 38			Ben		97033900		
3.8 i	01/95→03/01	122 / 166											
3.8 i	01/95→03/01	131 / 178									94028100	ø 250 x 69	⊕ rim size 15"
3.8 i AWD	01/95→03/01	122 / 166											
3.8 i AWD	01/95→03/01	131 / 178											
		564100	Kel		2304301	[–] 23043 18.6			Kel		2510801	[–] 25108 15.9	⊕ ABS
3.3 Flex-Fuel	01/98→03/01	116 / 158											
					92108700	ø 282.5 x 23.7 x 38					91056000	ø 250 x 57	
									Ben		97033900		
											94028100	ø 250 x 69	⊕ rim size 15"

		kW / hp											
AZTEK 09/00→08/05													
		564200							Ake		2336101	[+] 23361 15	
3.4	09/00→08/05	138 / 188											
3.4 All-wheel Drive	09/00→08/05	138 / 188											
BONNEVILLE 09/91→09/05													
		564300	Del		2471401	[+] 24714 15.9			Ake		2336101	[+] 23361 15	
3.8	09/91→09/99	176 / 239											
3.8	10/99→09/05	179 / 243											
		564400	Del		2471401	[+] 24714 15.9			Ake		2336101	[+] 23361 15	
3.8	10/94→09/05	153 / 208											
					92091500	ø 278 x 32 x 52							
FIREBIRD Cabriolet 01/93→ → FIREBIRD Convertible, Page 919													
FIREBIRD Convertible 01/93→													
		564500	Del		2471401	[+] 24714 15.9	01/94→						
3.4	01/93→	119 / 162											
G5 Coupe 01/07→12/09													
		564600			2481701	[+] 24817 17	JL9 -brake						
2.2	01/09→12/09	116 / 158											
2.4	01/07→12/08	129 / 175											
G5 Saloon 01/07→													
		564700			2481701	[+] 24817 17	JL9 -brake						
2.2	01/07→	110 / 150											
2.2	01/09→12/10	116 / 158											
2.4	01/07→12/08	129 / 175											
G5 Stufenheck 01/07→ → G5 Saloon, Page 919													
G6 03/04→12/10													
		564800	Bos		2479301	[+] 24793 19.5							
3.5	09/06→12/10	167 / 227											
3.5 GT	03/04→08/06	149 / 203	Bos		82513200								

		kW / hp									
GRAND AM Coupe 01/00→12/01											
564900											
2.4	01/00→12/01	112 / 152		2530401	[+] 25304 14.2						
GRAND PRIX VI Coupe 07/96→											
565000			Wag	2335801	[+] 23358 18	01/97→	Ake	2336101	[+] 23361 15		
3.8 GT	07/96→07/99	145 / 197									
3.8 GT Power	07/96→	179 / 243	Wag	2471701	[+] 24717 17.3	→12/96		92099800	ø 278 x 11 x 50.5	01/97→	
				92091500	ø 278 x 32 x 52	01/97→					
565100			Wag	2335801	[+] 23358 18		Ake	2336101	[+] 23361 15		
3.8 GT	08/99→	149 / 203		92091500	ø 278 x 32 x 52			92099800	ø 278 x 11 x 50.5		
GRAND PRIX VI Saloon 07/96→12/03											
565200			Wag	2335801	[+] 23358 18	01/97→	Ake	2336101	[+] 23361 15		
3.1	07/96→07/99	119 / 162									
3.8	07/96→07/99	145 / 197									
3.8 GT Power	07/96→12/03	179 / 243	Wag	2471701	[+] 24717 17.3	→12/96		92099800	ø 278 x 11 x 50.5	01/97→	
				92091500	ø 278 x 32 x 52	01/97→					
565300			Wag	2335801	[+] 23358 18		Ake	2336101	[+] 23361 15		
3.1	08/99→12/03	131 / 178									
3.8	08/99→12/03	149 / 203		92091500	ø 278 x 32 x 52			92099800	ø 278 x 11 x 50.5		
GRAND PRIX VI Stufenheck 07/96→12/03 → GRAND PRIX VI Saloon, Page 920											
GRAND PRIX Saloon 09/03→12/04											
565400			Sum	2485601	[+] 24856 17.9						
3.8	09/03→12/04	149 / 203									
GRAND PRIX Stufenheck 09/03→12/04 → GRAND PRIX Saloon, Page 920											
MATIZ G2 10/03→12/09											
565500			Ake	2324102	[–] 23241 16.5			91054000	ø 180 x 31		
1.0	10/03→12/09	49 / 67		82061500				97015600			
				92100300	ø 236 x 12.5 x 35.5			83054000	bore ø 17.5 ø 180 x 31		
							Luc	84054000	bore ø 17.5 ø 180 x 31		
								94026200	ø 180 x 40		
MONTANA 04/98→08/05											
565600			Wag	2335801	[+] 23358 18		Ake	2336101	[+] 23361 15		
3.4	04/98→08/05	138 / 188									
3.4 AWD	04/98→08/05	138 / 188		82501100				92099800	ø 278 x 11 x 50.5		
				92091500	ø 278 x 32 x 52			91075100	ø 225 x 45		
SOLSTICE 03/05→											
565700			Bos	2479301	[+] 24793 19.5		Ate	2413701	[–] 24137 16.7		
2.4 VVTi	03/05→	132 / 179									
			Bos	82513200			Ate	2413781	[–] 24137 16.7		
								epad			
SUNFIRE 11/98→10/02											
565800			Kel	2471101	[+] 24711 16.2						
2.2	11/98→10/02	86 / 117									
SUNFIRE Coupe 01/96→10/02											
565900			Kel	2471101	[+] 24711 16.2						
2.2 SE	11/98→10/02	86 / 117									
2.4	01/96→10/02	112 / 152									
TORRENT 08/04→											
566000			Man	2451001	[+] 24510 16.9		Man	2449801	[+] 24498 15.4		
3.4	08/04→	138 / 188									
3.4 All-wheel Drive	08/04→	138 / 188	Man	82077300			Man	82077200			
				92165400	ø 296 x 29 x 51.6			92165500	ø 303 x 20 x 71.7		
								91067100	ø 188.4 x 26		
								97038500			
TRANS SPORT 09/98→											
566100			Wag	2335801	[+] 23358 18		Ake	2336101	[+] 23361 15		
3.4	09/98→	137 / 186									
				92091500	ø 278 x 32 x 52			92099800	ø 278 x 11 x 50.5		

		kW / hp										
911 (991) 12/11→												
566200			Bre		**2500301**	[o] 25003 17.3				**98046300**	L180	
3.4 Carrera	12/11→	257 / 350			**98029500**	L270						
3.8 Carrera S	12/11→	294 / 400										
3.8 Carrera S	07/12→	316 / 430										
566300			Bre		**2500301**	[o] 25003 17.3		Bre		**2455404**	[o] 24554 16.7	
3.4 Carrera 4	11/12→	257 / 350			**98029500**	L270				**98046300**	L180	
3.8 Carrera 4S	11/12→	294 / 400										
3.8 Carrera 4S	11/12→	316 / 430										
566400					**98029500**	L270				**98046300**	L180	
3.8 GT3	08/13→	350 / 475										
911 (996) 09/97→08/05												
566500			Bre		**2332902**	[o] 23329 17		Bre		**2179203**	[o] 21792 15.5	
3.4 Carrera	09/97→09/01	221 / 301			**98022700**	L555				**98022700**	L555	
3.4 Carrera	05/01→08/05	235 / 320		PRO	**92099903**	ø 318 x 28 x 67	left		PRO	**92100103**	ø 299 x 24 x 75	
3.4 Carrera 4	09/97→09/01	221 / 301		PRO	**92100003**	ø 318 x 28 x 67	right			**91063500**	ø 180 x 25	
3.4 Carrera 4	05/01→08/05	235 / 320										
3.6 Carrera	10/01→08/05	235 / 320										
566600			Bre		**2332902**	[o] 23329 17		Bre		**2179203**	[o] 21792 15.5	
3.6 Carrera 4	10/01→08/05	235 / 320			**98022700**	L555				**98022700**	L555	
					92149900	ø 330 x 34 x 69.5	left MY 2002→ ⊖ ceramic brake		PRO	**92100103**	ø 299 x 24 x 75	
					92150000	ø 330 x 34 x 69.5	right MY 2002→ ⊖ ceramic brake			**91063500**	ø 180 x 25	
				PRO	**92099903**	ø 318 x 28 x 67	left					
				PRO	**92100003**	ø 318 x 28 x 67	right					
566700			Bre		**2313901**	[o] 23139 17		Bre		**2332902**	[o] 23329 17	
3.6 Carrera 4S	02/03→08/05	254 / 345			**98022700**	L555				**98022700**	L555	
					92149900	ø 330 x 34 x 69.5	left ⊖ ceramic brake			**98041800**	L500	⊕ ceramic brake
					92150000	ø 330 x 34 x 69.5	right ⊖ ceramic brake			**91063500**	ø 180 x 25	
566800			Bre		**2332902**	[o] 23329 17		Bre		**2179203**	[o] 21792 15.5	
3.6 Carrera S	02/03→08/05	254 / 345			**98022700**	L555				**98022700**	L555	
					92149900	ø 330 x 34 x 69.5	left ⊖ ceramic brake		PRO	**92100103**	ø 299 x 24 x 75	
					92150000	ø 330 x 34 x 69.5	right ⊖ ceramic brake			**91063500**	ø 180 x 25	
566900								Bre		**2332902**	[o] 23329 17	⊖ ceramic brake
3.6 GT2	04/01→08/05	340 / 462								**98041800**	L500	
3.6 GT2	10/03→08/05	355 / 483								**91063500**	ø 180 x 25	
567000			Bre		**2313901**	[o] 23139 17	→MY 2002 ⊖ ceramic brake	Bre		**2332902**	[o] 23329 17	⊖ ceramic brake
3.6 GT3	03/99→08/05	265 / 360	Bre		**2341401**	[o] 23414 17	MY 2004→ ⊖ ceramic brake			**98022700**	L555	→MY 2002 ⊖ ceramic brake
					98022700	L555	→MY 2002 ⊖ ceramic brake			**98037800**	L560	MY 2004→ ⊖ ceramic brake
					98037800	L560	MY 2004→ ⊖ ceramic brake			**91063500**	ø 180 x 25	
567100			Bre		**2313901**	[o] 23139 17		Bre		**2332902**	[o] 23329 17	⊖ ceramic brake
3.6 GT3	03/03→08/05	280 / 381			**98037800**	L560				**91063500**	ø 180 x 25	
567200			Bre		**2313901**	[o] 23139 17		Bre		**2332902**	[o] 23329 17	
3.6 S	08/04→08/05	331 / 450			**98022700**	L555	⊖ ceramic brake			**98022700**	L555	⊖ ceramic brake
3.6 Turbo 4	06/00→08/05	309 / 420			**92149900**	ø 330 x 34 x 69.5	left ⊖ ceramic brake			**98041800**	L500	⊕ ceramic brake
3.6 Turbo 4S	02/03→08/05	331 / 450			**92150000**	ø 330 x 34 x 69.5	right ⊖ ceramic brake			**91063500**	ø 180 x 25	
911 (997) 07/04→12/12												
567300			Bre		**2404901**	[o] 24049 17		Bre		**2179203**	[o] 21792 15.5	
3.6 Carrera	07/04→12/08	239 / 325			**98037200**					**98022700**	L555	

N - P

		kW / hp											
911 (997) 07/04→12/12													
567300				**98037400**	L360		left			**92100103**	ø 299 x 24 x 75	
3.6 Carrera	07/04→12/08	239 / 325		**98041900**	L460		right ⊕ ceramic brake			**91063500**	ø 180 x 25	
				98042000	L395		left ⊕ ceramic brake					
				92099903	ø 318 x 28 x 67		left					
				92100003	ø 318 x 28 x 67		right					
567400			Bre	**2332902**	[o] 23329 17		⊕ ceramic brake	Bre		**2179203**	[o] 21792 15.5	⊖ ceramic brake
3.6 Carrera	07/04→12/08	242 / 329	Bre	**2404901**	[o] 24049 17		⊖ ceramic brake			**98022700**	L555	⊖ ceramic brake
3.6 Carrera 4	09/05→12/08	242 / 329	Bre	**2404903**	[o] 24049 17		⊖ ceramic brake			**98038200**	L515	⊕ ceramic brake
				98037800	L560					**92100103**	ø 299 x 24 x 75	⊖ ceramic brake
				92099903	ø 318 x 28 x 67		left ⊖ ceramic brake					
				92100003	ø 318 x 28 x 67		right ⊖ ceramic brake					
567500			Bre	**2404901**	[o] 24049 17			Bre		**2179203**	[o] 21792 15.5	
3.6 Carrera	08/04→07/05	235 / 320		**98037200**						**98022700**	L555	
				98037400	L360		left			**92100103**	ø 299 x 24 x 75	
				92099903	ø 318 x 28 x 67		left			**91063500**	ø 180 x 25	
				92100003	ø 318 x 28 x 67		right					
567600			Bre	**2445901**	[o] 24459 18.5		⊖ USA ⊖ CDN	Bre		**2445401**	[o] 24454 17.5	
3.6 Carrera	06/08→12/11	254 / 345	Bre	**2445902**	[o] 24459 18.5		⊕ USA ⊕ CDN			**98041700**	L490	⊖ ceramic brake
				98041900	L460		right ⊕ ceramic brake			**91063500**	ø 180 x 25	
				98042000	L395		left ⊕ ceramic brake					
				98045100	L365		⊖ ceramic brake					
567700			Bre	**2404903**	[o] 24049 17			Bre		**2179203**	[o] 21792 15.5	
3.6 Carrera 4	07/04→12/08	239 / 325		**98037800**	L560		01/07→			**98022700**	L555	
				92099903	ø 318 x 28 x 67		left			**92100103**	ø 299 x 24 x 75	
				92100003	ø 318 x 28 x 67		right			**91063500**	ø 180 x 25	
567800			Bre	**2445901**	[o] 24459 18.5		⊖ USA ⊖ CDN	Bre		**2445401**	[o] 24454 17.5	
3.6 Carrera 4	06/08→12/12	254 / 345	Bre	**2445902**	[o] 24459 18.5		⊕ USA ⊕ CDN			**98041700**	L490	
				98045200	L520					**91063500**	ø 180 x 25	
567900				**98037800**	L560					**98041700**	L490	
3.6 GT 2	09/07→12/12	390 / 530								**91063500**	ø 180 x 25	
568000				**98042100**	L555					**98041700**	L490	
3.6 GT2 RS	05/10→12/12	456 / 620								**91063500**	ø 180 x 25	
568100			Bre	**2341401**	[o] 23414 17		⊖ ceramic brake	Bre		**2415404**	[o] 24154 17.7	⊖ ceramic brake
3.6 GT 3	03/06→12/09	305 / 415		**98042100**	L555					**98041700**	L490	
										91063500	ø 180 x 25	
568200			Bre	**2341401**	[o] 23414 17		⊖ ceramic brake	Bre		**2415401**	[o] 24154 17	⊖ ceramic brake
3.6 Turbo	03/06→12/09	353 / 480						Bre		**2445403**	[o] 24454 17	⊖ ceramic brake
3.8 Turbo	09/09→12/12	368 / 500		**98037800**	L560					**98041700**	L490	
3.8 Turbo S	02/10→12/12	390 / 530								**91063500**	ø 180 x 25	
568300			Bre	**2313901**	[o] 23139 17			Bre		**2332902**	[o] 23329 17	
3.6 Turbo 4	09/04→12/09	358 / 487										

		kW / hp										
911 (997) 07/04→12/12												
3.6 Turbo 4	09/04→12/09	568300 358 / 487		98022700	L555			98022700	L555		
				92149900	ø 330 x 34 x 69.5	left					
				92150000	ø 330 x 34 x 69.5	right					
3.8 Carrera 4 GTS	06/09→12/12	568400 300 / 408	Bre	2313901	[o] 23139 17	⊖ ceramic brake	Bre	2404901	[o] 24049 17	⊖ ceramic brake
3.8 Carrera GTS	06/09→12/11	300 / 408		98037900	L365	left ⊖ ceramic brake		98038200	L515	⊖ ceramic brake
				98038000	L388	right ⊖ ceramic brake		91063500	ø 180 x 25	
				92149900	ø 330 x 34 x 69.5	left ⊖ ceramic brake				
				92150000	ø 330 x 34 x 69.5	right ⊖ ceramic brake				
3.8 Carrera 4S	07/04→12/08	568500 261 / 355	Bre	2313901	[o] 23139 17		Bre	2404901	[o] 24049 17	⊖ ceramic brake
				98038300	L550			98038200	L515	
				92149900	ø 330 x 34 x 69.5	left ⊖ ceramic brake		91063500	ø 180 x 25	
				92150000	ø 330 x 34 x 69.5	right ⊖ ceramic brake				
3.8 Carrera 4S	08/05→12/08	568600 280 / 381	Bre	2313901	[o] 23139 17		Bre	2404901	[o] 24049 17	
3.8 Carrera 4S	06/08→12/12	283 / 385		98038300	L550			98038200	L515	
				92149900	ø 330 x 34 x 69.5	left ⊖ ceramic brake		91063500	ø 180 x 25	
				92150000	ø 330 x 34 x 69.5	right ⊖ ceramic brake				
3.8 Carrera 4S	09/05→12/08	568700 264 / 359	Bre	2313901	[o] 23139 17	⊖ ceramic brake	Bre	2404901	[o] 24049 17	⊖ ceramic brake
3.8 Carrera S	07/04→12/08	264 / 359	Bre	2332902	[o] 23329 17	⊕ ceramic brake		98038200	L515	
				98037800	L560	⊕ ceramic brake				
				98038300	L550	⊖ ceramic brake				
				92149900	ø 330 x 34 x 69.5	left ⊖ ceramic brake				
				92150000	ø 330 x 34 x 69.5	right ⊖ ceramic brake				
3.8 Carrera S	07/04→12/08	568800 261 / 355	Bre	2313901	[o] 23139 17		Bre	2404901	[o] 24049 17	⊖ ceramic brake
				98038300	L550			98038200	L515	
				98041900	L460	right ⊕ ceramic brake		91063500	ø 180 x 25	
				98042000	L395	left ⊕ ceramic brake				
				92149900	ø 330 x 34 x 69.5	left ⊖ ceramic brake				
				92150000	ø 330 x 34 x 69.5	right ⊖ ceramic brake				
3.8 Carrera S	08/05→12/08	568900 280 / 381	Bre	2313901	[o] 23139 17		Bre	2404901	[o] 24049 17	⊖ ceramic brake
				98041900	L460	right ⊕ ceramic brake		98038200	L515	
				98042000	L395	left ⊕ ceramic brake		91063500	ø 180 x 25	
				92149900	ø 330 x 34 x 69.5	left ⊖ ceramic brake				
				92150000	ø 330 x 34 x 69.5	right ⊖ ceramic brake				
3.8 Carrera S	06/08→12/11	569000 283 / 385	Bre	2313901	[o] 23139 17		Bre	2404901	[o] 24049 17	
				98037900	L365	left ⊖ ceramic brake		98038200	L515	⊖ ceramic brake
				98038000	L388	right ⊖ ceramic brake		91063500	ø 180 x 25	
				98041900	L460	right ⊕ ceramic brake				
				98042000	L395	left ⊕ ceramic brake				
3.8 GT3	05/09→12/11	569100 320 / 435	Bre	2464101	[o] 24641 17.7	⊖ ceramic brake	Bre	2415404	[o] 24154 17.7	⊖ ceramic brake
3.8 GT3 RS	08/09→12/11	331 / 450		98042100	L555			98041700	L490	
4.0 GT3 RS	07/11→12/12	368 / 500								

		kW / hp											
911 (997) 07/04→12/12													
		569100											
3.8 GT3	05/09→12/11	320 / 435											
3.8 GT3 RS	08/09→12/11	331 / 450											
4.0 GT3 RS	07/11→12/12	368 / 500											
		569200	Bre		**2445901**	[o] 24459 18.5		Bre		**2445401**	[o] 24454 17.5	
3.8 Turbo 4	09/10→12/11	373 / 507			**98045200**	L520				**98041700**	L490	
911 Cabriolet (991) 03/12→12/12 → 911 Convertible (991), Page 924													
911 Cabriolet (996) 02/98→08/05 → 911 Convertible (996), Page 924													
911 Cabriolet (997) 04/05→12/12 → 911 Convertible (997), Page 924													
911 Convertible (991) 03/12→12/12													
		569300	Bre		**2500301**	[o] 25003 17.3				**98046300**	L180	
3.4 Carrera	03/12→	257 / 350											
3.8 Carrera S	03/12→	294 / 400			**98029500**	L270							
3.8 Carrera S	07/12→	316 / 430											
		569400	Bre		**2500301**	[o] 25003 17.3		Bre		**2455404**	[o] 24554 16.7	
3.4 Carrera 4	11/12→	257 / 350											
3.8 Carrera 4S	11/12→	294 / 400											
3.8 Carrera 4S	11/12→	316 / 430			**98029500**	L270				**98046300**	L180	
		569500	Bre		**2313901**	[o] 23139 17		Bre		**2404901**	[o] 24049 17	
3.8 Carrera GTS	03/12→12/12	304 / 413			**98037900**	L365	left			**98038200**	L515	
					98038000	L388	right					
					92149900	ø 330 x 34 x 69.5	left					
					92150000	ø 330 x 34 x 69.5	right					
911 Convertible (996) 02/98→08/05													
		569600	Bre		**2332902**	[o] 23329 17		Bre		**2179203**	[o] 21792 15.5	
3.4 Carrera	02/98→09/01	221 / 301											
3.4 Carrera	05/01→08/05	235 / 320			**98022700**	L555				**98022700**	L555	
3.4 Carrera 4	02/98→09/01	221 / 301											
3.4 Carrera 4	05/01→08/05	235 / 320											
3.6 Carrera	10/01→08/05	235 / 320		PRO	**92099903**	ø 318 x 28 x 67	left		PRO	**92100103**	ø 299 x 24 x 75	
3.6 Carrera 4	10/01→08/05	235 / 320		PRO	**92100003**	ø 318 x 28 x 67	right			**91063500**	ø 180 x 25	
		569700	Bre		**2313901**	[o] 23139 17		Bre		**2332902**	[o] 23329 17	
3.6 Carrera 4S	06/02→08/05	254 / 345			**98022700**	L555				**98022700**	L555	
					92149900	ø 330 x 34 x 69.5	left ⊖ ceramic brake			**98041800**	L500	02/03→ ⊕ ceramic brake
					92150000	ø 330 x 34 x 69.5	right ⊖ ceramic brake			**91063500**	ø 180 x 25	
		569800	Bre		**2332902**	[o] 23329 17		Bre		**2179203**	[o] 21792 15.5	
3.6 Carrera S	06/02→08/05	254 / 345			**98022700**	L555				**98022700**	L555	
					92149900	ø 330 x 34 x 69.5	left ⊖ ceramic brake		PRO	**92100103**	ø 299 x 24 x 75	
					92150000	ø 330 x 34 x 69.5	right ⊖ ceramic brake			**91063500**	ø 180 x 25	
		569900	Bre		**2313901**	[o] 23139 17		Bre		**2332902**	[o] 23329 17	
3.6 S	08/04→08/05	331 / 450										
3.6 Turbo 4	10/03→08/05	309 / 420			**98022700**	L555	⊖ ceramic brake			**98022700**	L555	⊖ ceramic brake
3.6 Turbo 4S	10/03→08/05	331 / 450			**92149900**	ø 330 x 34 x 69.5	left ⊖ ceramic brake			**98041800**	L500	⊕ ceramic brake
					92150000	ø 330 x 34 x 69.5	right ⊖ ceramic brake			**91063500**	ø 180 x 25	
911 Convertible (997) 04/05→12/12													
		570000	Bre		**2404901**	[o] 24049 17		Bre		**2179203**	[o] 21792 15.5	
3.6 Carrera	04/05→07/05	235 / 320			**98037200**					**98022700**	L555	
					98037400	L360	left		PRO	**92100103**	ø 299 x 24 x 75	
				PRO	**92099903**	ø 318 x 28 x 67	left			**91063500**	ø 180 x 25	
				PRO	**92100003**	ø 318 x 28 x 67	right					
		570100	Bre		**2404901**	[o] 24049 17		Bre		**2179203**	[o] 21792 15.5	
3.6 Carrera	04/05→12/08	239 / 325			**98037200**					**98022700**	L555	

N - P

911 Convertible (997) 04/05→12/12

		kW / hp											
3.6 Carrera	04/05→12/08	570100 239 / 325		98037400	L360	left		92100103	ø 299 x 24 x 75	
				98041900	L460	right ⊕ ceramic brake		91063500	ø 180 x 25	
				98042000	L395	left ⊕ ceramic brake				
				92099903	ø 318 x 28 x 67	left				
				92100003	ø 318 x 28 x 67	right				
3.6 Carrera	04/05→12/08	570200 242 / 329	Bre	2332902	[o] 23329 17	⊕ ceramic brake	Bre	2179203	[o] 21792 15.5	⊖ ceramic brake
3.6 Carrera 4	04/05→12/08	242 / 329	Bre	2404901	[o] 24049 17	⊖ ceramic brake		98022700	L555	⊖ ceramic brake
			Bre	2404903	[o] 24049 17	⊖ ceramic brake		98038200	L515	⊕ ceramic brake
				98037800	L560			92100103	ø 299 x 24 x 75	⊖ ceramic brake
				92099903	ø 318 x 28 x 67	left ⊖ ceramic brake				
				92100003	ø 318 x 28 x 67	right ⊖ ceramic brake				
3.6 Carrera	06/08→12/11	570300 254 / 345	Bre	2445901	[o] 24459 18.5	⊖ USA ⊖ CDN	Bre	2445401	[o] 24454 17.5	
			Bre	2445902	[o] 24459 18.5	⊕ USA ⊕ CDN		98041700	L490	⊖ ceramic brake
				98041900	L460	right ⊕ ceramic brake		91063500	ø 180 x 25	
				98042000	L395	left ⊕ ceramic brake				
				98045100	L365	⊖ ceramic brake				
3.6 Carrera 4	04/05→12/08	570400 239 / 325	Bre	2404903	[o] 24049 17	2x	Bre	2179203	[o] 21792 15.5	
				98037800	L560	01/07→		98022700	L555	
				92099903	ø 318 x 28 x 67	left		92100103	ø 299 x 24 x 75	
				92100003	ø 318 x 28 x 67	right		91063500	ø 180 x 25	
3.6 Carrera 4	06/08→12/12	570500 254 / 345	Bre	2445901	[o] 24459 18.5	⊖ USA ⊖ CDN	Bre	2445401	[o] 24454 17.5	
			Bre	2445902	[o] 24459 18.5	⊕ USA ⊕ CDN		98041700	L490	
				98045200	L520			91063500	ø 180 x 25	
3.6 Carrera 4	09/10→12/11	570600 395 / 537	Bre	2445901	[o] 24459 18.5		Bre	2445401	[o] 24454 17.5	
3.8 Turbo 4	09/10→12/11	373 / 507		98045200	L520			98041700	L490	
3.6 Turbo	09/07→12/09	570700 353 / 480	Bre	2341401	[o] 23414 17	⊖ ceramic brake	Bre	2415401	[o] 24154 17	⊖ ceramic brake
							Bre	2445403	[o] 24454 17	⊖ ceramic brake
								98041700	L490	
								91063500	ø 180 x 25	
3.6 Turbo 4	09/07→12/09	570800 309 / 420	Bre	2341401	[o] 23414 17		Bre	2415401	[o] 24154 17	
				98037800	L560		Bre	2445403	[o] 24454 17	
								98041700	L490	
3.8 Carrera 4 GTS	06/09→12/12	570900 300 / 408	Bre	2313901	[o] 23139 17	⊖ ceramic brake	Bre	2404901	[o] 24049 17	⊖ ceramic brake
3.8 Carrera GTS	06/09→12/11	300 / 408		98037900	L365	left ⊖ ceramic brake		98038200	L515	⊖ ceramic brake
				98038000	L388	right ⊖ ceramic brake		91063500	ø 180 x 25	
				92149900	ø 330 x 34 x 69.5	left ⊖ ceramic brake				
				92150000	ø 330 x 34 x 69.5	right ⊖ ceramic brake				
3.8 Carrera 4S	04/05→12/08	571000 261 / 355	Bre	2313901	[o] 23139 17		Bre	2404901	[o] 24049 17	⊖ ceramic brake
				98038300	L550			98038200	L515	
				92149900	ø 330 x 34 x 69.5	left ⊖ ceramic brake		91063500	ø 180 x 25	

		kW / hp										
911 Convertible (997) 04/05→12/12												
571000				92150000	ø 330 x 34 x 69.5	right ⊖ ceramic brake						
3.8 Carrera 4S	04/05→12/08	261 / 355										
571100			Bre	2313901	[o] 23139 17	⊖ ceramic brake	Bre	2404901	[o] 24049 17	⊖ ceramic brake		
3.8 Carrera 4S	04/05→12/10	264 / 359	Bre	2332902	[o] 23329 17	⊕ ceramic brake		98038200	L515			
3.8 Carrera S	04/05→12/08	264 / 359		98037800	L560	⊕ ceramic brake						
				98038300	L550	⊖ ceramic brake						
				92149900	ø 330 x 34 x 69.5	left ⊖ ceramic brake						
				92150000	ø 330 x 34 x 69.5	right ⊖ ceramic brake						
571200			Bre	2313901	[o] 23139 17		Bre	2404901	[o] 24049 17			
3.8 Carrera 4S	08/05→12/08	280 / 381		98038300	L550			98038200	L515			
3.8 Carrera 4S	06/08→12/12	283 / 385		92149900	ø 330 x 34 x 69.5	left ⊖ ceramic brake		91063500	ø 180 x 25			
				92150000	ø 330 x 34 x 69.5	right ⊖ ceramic brake						
571300			Bre	2313901	[o] 23139 17		Bre	2404901	[o] 24049 17	⊖ ceramic brake		
3.8 Carrera S	04/05→12/08	261 / 355		98038300	L550			91063500	ø 180 x 25			
				98041900	L460	right ⊕ ceramic brake						
				98042000	L395	left ⊕ ceramic brake						
				92149900	ø 330 x 34 x 69.5	left ⊖ ceramic brake						
				92150000	ø 330 x 34 x 69.5	right ⊖ ceramic brake						
571400			Bre	2313901	[o] 23139 17		Bre	2404901	[o] 24049 17	⊖ ceramic brake		
3.8 Carrera S	08/05→12/08	280 / 381		98041900	L460	right ⊕ ceramic brake		91063500	ø 180 x 25			
				98042000	L395	left ⊕ ceramic brake						
				92149900	ø 330 x 34 x 69.5	left ⊖ ceramic brake						
				92150000	ø 330 x 34 x 69.5	right ⊖ ceramic brake						
571500			Bre	2313901	[o] 23139 17		Bre	2404901	[o] 24049 17			
3.8 Carrera S	06/08→12/11	283 / 385		98037900	L365	left ⊖ ceramic brake		98038200	L515	⊖ ceramic brake		
				98038000	L388	right ⊖ ceramic brake		91063500	ø 180 x 25			
				98041900	L460	right ⊕ ceramic brake						
				98042000	L395	left ⊕ ceramic brake						
571600			Bre	2341401	[o] 23414 17	⊖ ceramic brake	Bre	2415401	[o] 24154 17	⊖ ceramic brake		
3.8 Turbo	09/09→12/12	368 / 500		98037800	L560		Bre	2445403	[o] 24454 17	⊖ ceramic brake		
3.8 Turbo S	02/10→12/12	390 / 530						98041700	L490			
								91063500	ø 180 x 25			
911 Targa (991) 05/14→												
571700			Bre	2500301	[o] 25003 17.3	⊖ ceramic brake	Bre	2455404	[o] 24554 16.7	⊖ ceramic brake		
3.8 Carrera 4S	05/14→	294 / 400		98029500	L270	⊖ ceramic brake		98046300	L180	⊖ ceramic brake		
911 Targa (996) 12/01→08/05												
571800			Bre	2332902	[o] 23329 17		Bre	2179203	[o] 21792 15.5			
3.6	12/01→08/05	235 / 320		98022700	L555			98022700	L555			
				PRO 92099903	ø 318 x 28 x 67	left		PRO 92100103	ø 299 x 24 x 75			
				PRO 92100003	ø 318 x 28 x 67	right		91063500	ø 180 x 25			
911 Targa (997) 07/06→12/12												
571900			Bre	2404903	[o] 24049 17		Bre	2179203	[o] 21792 15.5			
3.6 Carrera 4	07/06→12/08	239 / 325										

→

		kW / hp										
911 Targa (997) 07/06→12/12												
571900				98037200					98022700	L555		
3.6 Carrera 4	07/06→12/08	239 / 325		98037400	L360	left		PRO	92100103	ø 299 x 24 x 75		
				98037800	L560	01/07→			91063500	ø 180 x 25		
				PRO 92099903	ø 318 x 28 x 67	left						
				PRO 92100003	ø 318 x 28 x 67	right						
572000			Bre	2445901	[o] 24459 18.5	⊖ USA ⊖ CDN	Bre		2445401	[o] 24454 17.5		
3.6 Carrera 4	10/08→12/12	254 / 345	Bre	2445902	[o] 24459 18.5	⊕ USA ⊕ CDN			91063500	ø 180 x 25		
				98045200	L520							
572100			Bre	2313901	[o] 23139 17		Bre		2404901	[o] 24049 17	⊖ ceramic brake	
3.8 Carrera 4S	07/06→12/08	261 / 355		98038300	L550				98038200	L515		
				92149900	ø 330 x 34 x 69.5	left ⊖ ceramic brake			91063500	ø 180 x 25		
				92150000	ø 330 x 34 x 69.5	right ⊖ ceramic brake						
572200			Bre	2313901	[o] 23139 17		Bre		2404901	[o] 24049 17		
3.8 Carrera 4S	10/08→12/12	283 / 385		98038300	L550				98038200	L515		
				92149900	ø 330 x 34 x 69.5	left ⊖ ceramic brake			91063500	ø 180 x 25		
				92150000	ø 330 x 34 x 69.5	right ⊖ ceramic brake						
BOXSTER (981) 04/12→												
572300				98050100	L250		Bre		2454101	[o] 24541 15.5		
2.7	04/12→	195 / 265							98050200	L275		
								PRO	92165303	ø 299 x 20 x 67		
572400			Bre	2445901	[o] 24459 18.5	⊖ ceramic brake	Bre		2454101	[o] 24541 15.5	⊖ ceramic brake	
GTS 3.4	02/14→	243 / 330		98050100	L250	⊖ ceramic brake			98050200	L275		
								PRO	92165303	ø 299 x 20 x 67		
572500			Bre	2445901	[o] 24459 18.5		Bre		2454101	[o] 24541 15.5		
S 3.4	04/12→	232 / 315		98050100	L250				98050200	L275		
								PRO	92165303	ø 299 x 20 x 67		
BOXSTER (986) 09/96→12/04												
572600			Bre	2193702	[o] 21937 15.5		Bre		2179203	[o] 21792 15.5		
2.5	09/96→08/99	150 / 204										
2.7	06/99→12/02	155 / 211										
2.7	08/99→07/02	162 / 220		98022700	L555				98022600	L555		
2.7	07/02→12/04	168 / 228		PRO 92088803	ø 298 x 24 x 67			PRO	92088903	ø 292 x 20 x 67		
									91060800	ø 164 x 20		
572700			Bre	2332902	[o] 23329 17		Bre		2179203	[o] 21792 15.5		
S 3,2	07/02→12/04	191 / 260		98022700	L555				98022600	L555		
				PRO 92099903	ø 318 x 28 x 67	left		PRO	92176703	ø 299 x 24 x 67		
				PRO 92100003	ø 318 x 28 x 67	right			91060800	ø 164 x 20	→MY 2002	
									91063500	ø 180 x 25	MY 2003→	
572800			Bre	2332902	[o] 23329 17		Bre		2179203	[o] 21792 15.5		
S 3.2	08/99→07/02	185 / 252		98022700	L555				98022600	L555		
				PRO 92099903	ø 318 x 28 x 67	left		PRO	92176703	ø 299 x 24 x 67		
				PRO 92100003	ø 318 x 28 x 67	right			91060800	ø 164 x 20		

N - P

		kW / hp										
BOXSTER (986) 09/96→12/04												
		572900	Bre		**2332902**	[o] 23329 17		Bre		**2179203**	[o] 21792 15.5	
S 3.2	01/04→12/04	196 / 266			**98022700**	L555				**98022600**	L555	
				PRO	**92099903**	ø 318 x 28 x 67	left		PRO	**92176703**	ø 299 x 24 x 67	
				PRO	**92100003**	ø 318 x 28 x 67	right			**91063500**	ø 180 x 25	
BOXSTER (987) 11/04→12/11												
		573000	Bre		**2193702**	[o] 21937 15.5		Bre		**2179203**	[o] 21792 15.5	
2.7	11/04→12/06	176 / 240			**98037900**	L365	right	Bre		**2454101**	[o] 24541 15.5	
					98040300	L612	left			**98022600**	L555	
									PRO	**92165303**	ø 299 x 20 x 67	
										91063500	ø 180 x 25	
		573100	Bre		**2193702**	[o] 21937 15.5		Bre		**2179203**	[o] 21792 15.5	
2.7	07/06→12/09	180 / 245			**98037900**	L365	right			**98022600**	L555	
2.9	06/09→12/11	188 / 255			**98040300**	L612	left		PRO	**92165303**	ø 299 x 20 x 67	
										91063500	ø 180 x 25	
		573200	Bre		**2193702**	[o] 21937 15.5		Bre		**2179203**	[o] 21792 15.5	
2.7	09/06→12/08	179 / 243			**98037900**	L365	right			**98040200**	L505	
					98040300	L612	left		PRO	**92165303**	ø 299 x 20 x 67	
		573300	Bre		**2404901**	[o] 24049 17	⊖ ceramic brake	Bre		**2179203**	[o] 21792 15.5	⊖ ceramic brake
S 3.2	11/04→12/06	206 / 280			**98037200**					**98022600**	L555	
S 3.4	07/06→12/09	217 / 295			**98037400**	L360	left		PRO	**92176703**	ø 299 x 24 x 67	
					98041900	L460	right ⊕ ceramic brake			**91063500**	ø 180 x 25	
					98042000	L395	left ⊕ ceramic brake					
				PRO	**92099903**	ø 318 x 28 x 67	left					
				PRO	**92100003**	ø 318 x 28 x 67	right					
		573400	Bre		**2404901**	[o] 24049 17	⊖ ceramic brake	Bre		**2454101**	[o] 24541 15.5	⊖ ceramic brake
S 3.4	08/08→12/09	223 / 303			**98037200**					**98040200**	L505	
S 3.4	06/09→12/11	228 / 310			**98037400**	L360	left		PRO	**92176703**	ø 299 x 24 x 67	
Spyder 3.4	06/10→12/11	235 / 320			**98041900**	L460	right ⊕ ceramic brake			**91063500**	ø 180 x 25	
					98042000	L395	left ⊕ ceramic brake					
				PRO	**92099903**	ø 318 x 28 x 67	left					
				PRO	**92100003**	ø 318 x 28 x 67	right					
		573500	Bre		**2332902**	[o] 23329 17	⊕ ceramic brake	Bre		**2454101**	[o] 24541 15.5	⊖ ceramic brake
Spyder 3.4	06/10→12/11	231 / 314	Bre		**2404901**	[o] 24049 17	⊖ ceramic brake			**98022600**	L555	⊖ ceramic brake
					98037200		⊖ ceramic brake			**98040200**	L505	⊕ ceramic brake
					98041900	L460	right ⊕ ceramic brake					
					98042000	L395	left ⊕ ceramic brake					
				PRO	**92099903**	ø 318 x 28 x 67	left ⊖ ceramic brake					
				PRO	**92100003**	ø 318 x 28 x 67	right ⊖ ceramic brake					
CARRERA GT 07/03→12/06												
		573600			**98047000**	L275				**98037800**	L560	
5.7	07/03→12/06	450 / 612										

N - P

		kW / hp											
CAYENNE (955) 09/02→09/10													
		573700	Bre		2369202	[o] 23692 16.7		Bre		2369402	[o] 23694 16.7	
3.0 TDI	02/09→09/10	176 / 240	Bre	epad	2369281	[o] 23692 16.7		Bre	epad	2369481	[o] 23694 16.7	
3.2	08/03→09/07	177 / 241			98030900	L420				98031000	L255	
3.2	10/03→09/07	184 / 250	Bre		82076500			Bre		82076600		
3.6	02/07→09/10	213 / 290			92121500	ø 330 x 32 x 68.5	left			92122000	ø 330 x 28 x 73.5	
					92121600	ø 330 x 32 x 68.5	right		PRO	92122005	ø 330 x 28 x 73.5	
				PRO	92121505	ø 330 x 32 x 68.5	left			TPM0005		
				PRO	92121605	ø 330 x 32 x 68.5	right			91062400	ø 210 x 30	
					TPM0005					97032200		
		573800	Bre		2369302	[o] 23693 16.7		Bre		2369402	[o] 23694 16.7	
GTS 4.8	10/07→09/10	298 / 405	Bre	epad	2369381	[o] 23693 16.7		Bre	epad	2369481	[o] 23694 16.7	
					98038800	L370				98038900	L240	
					92121700	ø 350 x 34 x 68.8	left			92122000	ø 330 x 28 x 73.5	
					92121800	ø 350 x 34 x 68.8	right		PRO	92122005	ø 330 x 28 x 73.5	
				PRO	92121705	ø 350 x 34 x 68.8	left			TPM0005		
				PRO	92121805	ø 350 x 34 x 68.8	right			91062400	ø 210 x 30	
					TPM0005					97032200		
		573900	Bre		2369302	[o] 23693 16.7		Bre		2369402	[o] 23694 16.7	
S 4.5	09/02→12/06	184 / 250	Bre	epad	2369381	[o] 23693 16.7		Bre	epad	2369481	[o] 23694 16.7	
S 4.5	09/02→09/07	250 / 340			98030900	L420				98031000	L255	
S 4.8	02/07→09/10	283 / 385	Bre		82076500			Bre		82076600		
Turbo 4.5	09/02→09/07	331 / 450			92121700	ø 350 x 34 x 68.8	left			92122000	ø 330 x 28 x 73.5	
					92121800	ø 350 x 34 x 68.8	right		PRO	92122005	ø 330 x 28 x 73.5	
				PRO	92121705	ø 350 x 34 x 68.8	left			TPM0005		
				PRO	92121805	ø 350 x 34 x 68.8	right			91062400	ø 210 x 30	
					TPM0005					97032200		
		574000	Bre		2396101	[o] 23961 17	19" -brake Ø 380 mm	Bre		2401001	[o] 24010 16.7	19" -brake Ø 358 mm
Turbo S 4.5	01/04→09/07	368 / 500	Bre		2455301	[o] 24553 16.1	18"plus -brake Ø 368 mm	Bre		2461401	[o] 24614 16.6	18"plus -brake Ø 358 mm
Turbo S 4.5	03/06→09/07	383 / 521			98037300	L405	19" -brake			98031000	L255	19" -brake
Turbo S 4.8	02/07→09/10	368 / 500			98038800	L370	18"plus -brake			98038900	L240	18"plus -brake
Turbo S 4.8	02/07→09/10	397 / 540			TPM0005				PRO	92151403	ø 358 x 28 x 73.5	
Turbo S 4.8	08/08→09/10	404 / 550								TPM0005		
										91062400	ø 210 x 30	
										97032200		
CAYENNE 06/10→													
		574100	Bre		2468501	[o] 24685 17.1		Bre		2472101	[o] 24721 17.2	
3.0 Diesel	06/10→	155 / 211			98045300	L295				98045400	L140	
3.0 Diesel	06/10→	176 / 239			92121700	ø 350 x 34 x 68.8	left			92122000	ø 330 x 28 x 73.5	
3.0 Diesel	06/11→	180 / 245			92121800	ø 350 x 34 x 68.8	right		PRO	92122005	ø 330 x 28 x 73.5	
3.6	06/10→	220 / 300		PRO	92121705	ø 350 x 34 x 68.8	left			TPM0005		

		kW / hp										
CAYENNE 06/10→												
574100												
3.0 Diesel	06/10→	155 / 211		PRO	92121805	ø 350 x 34 x 68.8	right			91074700	ø 210 x 30	
3.0 Diesel	06/10→	176 / 239			TPM0005					97037500		
3.0 Diesel	06/11→	180 / 245										
3.6	06/10→	220 / 300										
574200			Bre		2500701	[o] 25007 17.1		Bre		2472101	[o] 24721 17.2	
3.0 S	04/11→	245 / 333			98045300	L295				98045400	L140	
3.0 S E-Hybrid	06/10→	245 / 333			TPM0005					92122000	ø 330 x 28 x 73.5	
4.2 S Diesel	10/12→	281 / 382							PRO	92122005	ø 330 x 28 x 73.5	
4.8 S	06/10→	294 / 400								TPM0005		
										91074700	ø 210 x 30	
										97037500		
574300			Bre		2500701	[o] 25007 17.1		Bre		2472102	[o] 24721 17.4	
4.8 GTS	06/12→	309 / 420			98045300	L295				98045400	L140	
4.8 Turbo	06/10→	368 / 500			TPM0005				PRO	92151403	ø 358 x 28 x 73.5	
4.8 Turbo	06/10→	397 / 540								TPM0005		
4.8 Turbo S	10/12→	405 / 550								91074700	ø 210 x 30	
										97037500		
CAYMAN (981) 03/13→												
574400					98050100	L250		Bre		2454101	[o] 24541 15.5	
2.7	03/13→	202 / 275								98050200	L275	
									PRO	92165303	ø 299 x 20 x 67	
574500			Bre		2445901	[o] 24459 18.5	⊖ ceramic brake			98050200	L275	
GTS 3.4	02/14→	250 / 340			98050100	L250						
574600			Bre		2445901	[o] 24459 18.5		Bre		2454101	[o] 24541 15.5	
S 3.4	03/13→	239 / 325			98050100	L250				98050200	L275	
									PRO	92165303	ø 299 x 20 x 67	
CAYMAN (987) 11/05→12/13												
574700			Bre		2193702	[o] 21937 15.5		Bre		2179203	[o] 21792 15.5	
2.7	07/06→12/09	180 / 245			98037900	L365	right			98040200	L505	
					98040300	L612	left			91063500	ø 180 x 25	
				PRO	92099903	ø 318 x 28 x 67	left					
				PRO	92100003	ø 318 x 28 x 67	right					
574800					98050100	L250		Bre		2454101	[o] 24541 15.5	⊖ ceramic brake
2.7	09/12→12/13	205 / 279								98050200	L275	
S 3.4	09/12→12/13	242 / 329							PRO	92165303	ø 299 x 20 x 67	⊖ ceramic brake
S 3.4	09/12→12/13	242 / 329										
574900			Bre		2404901	[o] 24049 17		Bre		2179203	[o] 21792 15.5	
2.9	02/09→12/12	195 / 265			98037900	L365	right			98040200	L505	
					98040300	L612	left			91063500	ø 180 x 25	
				PRO	92099903	ø 318 x 28 x 67	left					
				PRO	92100003	ø 318 x 28 x 67	right					
575000			Bre		2404903	[o] 24049 17	⊖ ceramic brake	Bre		2179203	[o] 21792 15.5	⊖ ceramic brake MY 2010→
R 3.4	11/10→12/12	243 / 330			98037200		⊖ ceramic brake	Bre		2454101	[o] 24541 15.5	⊖ ceramic brake →MY 2009

→

		kW / hp											
CAYMAN (987) 11/05→12/13													
		575000			**98037400**	L360		left ⊖ ceramic brake		**98040200**	L505		⊖ ceramic brake
R 3.4	11/10→12/12	243 / 330		PRO	**92099903**	ø 318 x 28 x 67		left ⊖ ceramic brake		PRO **92176703**	ø 299 x 24 x 67		⊖ ceramic brake
				PRO	**92100003**	ø 318 x 28 x 67		right ⊖ ceramic brake		**91063500**	ø 180 x 25		
		575100	Bre		**2404903**	[o] 24049 17		⊖ ceramic brake 2x	Bre	**2454101**	[o] 24541 15.5		⊖ ceramic brake
S 3,4 Sport	08/08→12/12	223 / 303			**98037200**					**98040200**	L505		
					98037400	L360		left		PRO **92176703**	ø 299 x 24 x 67		
				PRO	**92099903**	ø 318 x 28 x 67		left		**91063500**	ø 180 x 25		
				PRO	**92100003**	ø 318 x 28 x 67		right					
		575200	Bre		**2404901**	[o] 24049 17		⊖ ceramic brake	Bre	**2179203**	[o] 21792 15.5		⊖ ceramic brake
S 3.4	11/05→12/09	217 / 295			**98037200**					**98040200**	L505		
					98037400	L360		left		PRO **92176703**	ø 299 x 24 x 67		⊖ ceramic brake
				PRO	**92099903**	ø 318 x 28 x 67		left		**91063500**	ø 180 x 25		
				PRO	**92100003**	ø 318 x 28 x 67		right					
		575300	Bre		**2404901**	[o] 24049 17		⊖ ceramic brake MY 2010→	Bre	**2179203**	[o] 21792 15.5		⊖ ceramic brake MY 2010→
S 3.4	02/09→12/12	235 / 320	Bre		**2404903**	[o] 24049 17		⊖ ceramic brake →MY 2009	Bre	**2454101**	[o] 24541 15.5		⊖ ceramic brake →MY 2009
					98037200			⊖ ceramic brake		**98040200**	L505		⊖ ceramic brake
					98037400	L360		left ⊖ ceramic brake		PRO **92176703**	ø 299 x 24 x 67		⊖ ceramic brake
				PRO	**92099903**	ø 318 x 28 x 67		left ⊖ ceramic brake		**91063500**	ø 180 x 25		
				PRO	**92100003**	ø 318 x 28 x 67		right ⊖ ceramic brake					
MACAN 02/14→													
		575400	Bre		**2570101**	[o] 25701 16.9			Luc	**2521403**	[+] 25214 17.5		
3.0 S	02/14→	250 / 340			**TPM0008**					**98046500**	L215		
3.0 S Diesel	02/14→	155 / 211								**TPM0008**			
3.0 S Diesel	02/14→	184 / 250											
3.0 S Diesel	02/14→	190 / 258											
		575500	Bre		**2500701**	[o] 25007 17.1				**98046500**	L215		
3.6 Turbo	02/14→	294 / 400			**TPM0008**					**TPM0008**			
PANAMERA 09/09→													
		575600	Bre		**2500701**	[o] 25007 17.1			Bre	**2455401**	[o] 24554 16		
3.0 4S	07/13→	309 / 420			**98045300**	L295				**98045400**	L140		
3.0 S	07/13→	309 / 420											
3.0 S E-Hybrid	07/13→	306 / 416											
4.8 GTS	07/13→	324 / 440											
4.8 Turbo	07/13→	382 / 520											
		575700	Bre		**2500701**	[o] 25007 17.1		⊖ ceramic brake	Bre	**2455401**	[o] 24554 16		⊖ ceramic brake
3.0 D	08/11→	155 / 211											
3.0 D	08/11→	184 / 250			**98045300**	L295		⊖ ceramic brake		**98045000**	L230		⊖ ceramic brake
3.6	05/10→	220 / 300											
3.6	07/13→	228 / 310								**91076700**	ø 180 x 25		
3.6 4	05/10→	220 / 300											
3.6 4	07/13→	228 / 310											
		575800	Bre		**2500701**	[o] 25007 17.1		⊖ ceramic brake	Bre	**2455401**	[o] 24554 16		⊖ ceramic brake
3.0 S E-Hybrid	03/11→	245 / 333											
3.0 S E-Hybrid	03/11→	279 / 380			**98045300**	L295		⊖ ceramic brake		**98045000**	L230		
										91076700	ø 180 x 25		
		575900	Bre		**2455301**	[o] 24553 16.1		⊖ ceramic brake →97AL042783 →A7AL061415	Bre	**2455401**	[o] 24554 16		⊖ ceramic brake
4.8	09/09→	302 / 411											
4.8 4S	09/09→	294 / 400	Bre		**2500701**	[o] 25007 17.1		⊖ ceramic brake 97AL042784→ A7AL061416→		**98045000**	L230		
4.8 4S	09/09→	302 / 411											
4.8 GTS	01/12→	316 / 430			**98038800**	L370		→MY 2010 ⊖ PR I750		**91076700**	ø 180 x 25		
4.8 S	09/09→	294 / 400			**98045300**	L295		MY 2010→ ⊖ PR I750					
		576000	Bre		**2455301**	[o] 24553 16.1		⊖ ceramic brake →A7AL061415	Bre	**2455401**	[o] 24554 16		
4.8 GTS	09/12→	320 / 435	Bre		**2500701**	[o] 25007 17.1		⊖ ceramic brake A7AL061416→		**98045000**	L230		⊕ ceramic brake

N - P

		kW / hp										
PANAMERA 09/09→												
576000												
4.8 GTS	09/12→	320 / 435			**98038800**	L370	⊕ ceramic brake			**98045400**	L140	⊖ ceramic brake
					98045300	L295	⊖ ceramic brake			**91076700**	ø 180 x 25	
576100			Bre		**2455301**	[o] 24553 16.1	⊖ ceramic brake →97AL090414 →A7AL090416	Bre		**2455401**	[o] 24554 16	⊖ ceramic brake
4.8 Turbo	09/09→	368 / 500	Bre		**2500701**	[o] 25007 17.1	⊖ ceramic brake 97AL090415→ A7AL090417→			**98045000**	L230	
					98038800	L370	→MY 2010 ⊖ PR I750			**91076700**	ø 180 x 25	
					98045300	L295	MY 2010→ ⊖ PR I750					
576200			Bre		**2455301**	[o] 24553 16.1	⊖ ceramic brake →97AL090414 →A7AL090416	Bre		**2455402**	[o] 24554 16	⊖ ceramic brake
4.8 Turbo	08/10→	397 / 540	Bre		**2500701**	[o] 25007 17.1	⊖ ceramic brake 97AL090415→ A7AL090417→			**98045000**	L230	
					98038800	L370	→MY 2010 ⊖ PR I750			**91076700**	ø 180 x 25	
					98045300	L295	MY 2010→ ⊖ PR I750					
576300			Bre		**2500701**	[o] 25007 17.1	⊖ ceramic brake	Bre		**2455402**	[o] 24554 16	⊖ ceramic brake
4.8 Turbo S	05/11→	404 / 550			**98045300**	L295	⊖ ceramic brake			**98045000**	L230	
										91076700	ø 180 x 25	

		kW / hp										
RIO 09/10→												
576400			Sum		**2165001**	[+] 21650 15				**91068600**	ø 228.6 x 41.5	
1.2	01/13→	56 / 76										
1.2 CRDi	01/13→	53 / 72										
1.5 D	09/10→	48 / 65			**92138200**	ø 273 x 16 x 37.5				**94034300**	ø 228,6 x 54	

		kW / hp										
ARENA Pick-up 05/02→ → JUMBUCK Pickup, Page 932												
COMPACT (C9_M) 04/96→ → SATRIA (C9_M), Page 934												
GEN-2 PERSONA Saloon 03/08→ → PERSONA Saloon, Page 934												
GEN-2 PERSONA Stufenheck 03/08→ → PERSONA Saloon, Page 934												
GEN 2 (CM_) 06/04→												
576500			Sum		**2165001**	[+] 21650 15	Sumitomo	Bos		**2426004**	[+] 24260 16.3	⊕ rear disc brake
1.3	06/04→	60 / 82										
1.3	06/04→	70 / 95	Bos		**2428801**	[+] 24288 17	Bosch			**94025900**	ø 180 x 46	
1.6	06/04→	82 / 110			**92089400**	ø 236 x 18 x 45						
IMPIAN 09/01→												
576600			Sum		**2165001**	[+] 21650 15	Sumitomo	Luc		**2354901**	[+] 23549 16.8	
1.6	09/01→	76 / 102	Luc		**2192001**	[+] 21920 15.1	Lucas	Luc		**82058900**		
					92082900	ø 256 x 24 x 45.5		Luc		**82063300**		
					92103900	ø 256 x 24 x 45			PRO	**92083003**	ø 260 x 10 x 41	
IPIAN - WAJA 09/01→ → IMPIAN, Page 932												
JUMBUCK Pickup 05/02→												
576700			Sum		**2165001**	[+] 21650 15	Sumitomo			**91045801**	ø 180 x 37	
1.5	05/02→	64 / 86	Luc		**2192001**	[+] 21920 15.1	Lucas			**94025900**	ø 180 x 46	
					92089400	ø 236 x 18 x 45						
JUMBUCK Pick-up 05/02→ → JUMBUCK Pickup, Page 932												
M21 Coupe 01/95→11/00 → PUTRA Coupe, Page 934												
PERDANA 02/95→												
576800			Sum		**2164701**	[+] 21647 16		Ake		**2170602**	[+] 21706 15.5	
2.0 i 16V	02/95→	101 / 137										
2.0 i V6	02/99→	110 / 150										

		kW / hp										
PERDANA 02/95→												
		576800							Ake			
2.0 i 16V	02/95→	101 / 137		92082900	ø 256 x 24 x 45.5					82031100		
2.0 i V6	02/99→	110 / 150		92103900	ø 256 x 24 x 45					92104000	ø 262 x 10 x 61.6	
										91063000	ø 167 x 32	
PERSONA (C9_M) 03/96→ → PERSONA 300 (C9_M), Page 933												
PERSONA 300 (C9_M) 03/96→												
		576900	Sum	2165001	[+] 21650 15					91045801	ø 180 x 37	
1.3	08/00→	55 / 75		92089300	ø 234 x 13 x 45					94025900	ø 180 x 46	
		577000	Sum	2164701	[+] 21647 16				Ake	2187202	[+] 21872 14.5	
1.8 GTi	08/00→	103 / 140										
316 GLXi	03/96→	83 / 113		92135000	ø 256 x 24 x 45					82511600		
										92171203 PRO	ø 260 x 10 x 41	
		577100	Sum	2165001	[+] 21650 15					91045801	ø 180 x 37	
313i	03/96→	55 / 75		92089300	ø 234 x 13 x 45					94025900	ø 180 x 46	→07/00
		577200	Sum	2165001	[+] 21650 15					91045801	ø 180 x 37	
315 GLi/GLSi	03/96→	66 / 90										
315 GLSi	09/96→	64 / 87		92089400	ø 236 x 18 x 45					94025900	ø 180 x 46	→07/00
		577300	Sum	2164701	[+] 21647 16				Ake	2187202	[+] 21872 14.5	
316	03/96→	70 / 95										
318 16V GTI	03/96→	99 / 135								82511600		
										92171203 PRO	ø 260 x 10 x 41	
PERSONA 400 (C9_S) 01/94→												
		577400	Sum	2165001	[+] 21650 15					91045801	ø 180 x 37	
1.3	10/05→	57 / 78										
413	01/94→	55 / 75		92089300	ø 234 x 13 x 45					94025900	ø 180 x 46	
				92089400	ø 236 x 18 x 45	⊕ power steering						
		577500	Sum	2165001	[+] 21650 15					91045801	ø 180 x 37	
415 GLi/GLSi	01/94→	66 / 90		92089400	ø 236 x 18 x 45					94025900	ø 180 x 46	07/00→
		577600	Sum	2164701	[+] 21647 16				Ake	2187202	[+] 21872 14.5	
416 GLXi	01/94→	83 / 113										
418	05/96→	85 / 115		92135000	ø 256 x 24 x 45					82511600		
										92171203 PRO	ø 260 x 10 x 41	
		577700	Sum	2165001	[+] 21650 15					91045801	ø 180 x 37	
420 GLS D	05/96→	48 / 65		92089400	ø 236 x 18 x 45					94025900	ø 180 x 46	12/98→
		577800	Sum	2165001	[+] 21650 15					91045801	ø 180 x 37	02/97→ →07/00
420 TD	09/96→	60 / 82		92089400	ø 236 x 18 x 45					94025900	ø 180 x 46	02/97→ →07/00
PERSONA 400 Hatchback (C9_C, C9_S) 01/94→												
		577900	Sum	2164701	[+] 21647 16				Ake	2187202	[+] 21872 14.5	
1.8	08/00→12/01	99 / 135										
416 GLXi	01/94→	83 / 113										
418 GLXi	05/96→	85 / 115		92135000	ø 256 x 24 x 45					82511600		
										92171203 PRO	ø 260 x 10 x 41	
		578000	Sum	2165001	[+] 21650 15					91045801	ø 180 x 37	
413 GLSi	01/94→	55 / 75		92089300	ø 234 x 13 x 45					94025900	ø 180 x 46	
				92089400	ø 236 x 18 x 45	⊕ power steering						
		578100	Sum	2165001	[+] 21650 15					91045801	ø 180 x 37	
415 GLi/GLSi	01/94→	66 / 90		92089400	ø 236 x 18 x 45					94025900	ø 180 x 46	07/00→
		578200	Luc	2192001	[+] 21920 15.1				Ake	2187202	[+] 21872 14.5	
416 i	12/95→	70 / 95		92082900	ø 256 x 24 x 45.5					82511600		

N - P

		kW / hp										
PERSONA 400 Hatchback (C9_C, C9_S) 01/94→												
416 i	12/95→	578200 70 / 95		92103900	ø 256 x 24 x 45			PRO 92171203	ø 260 x 10 x 41	
420 D	09/96→	578300 60 / 82	Sum	2165001	[+] 21650 15			91045801	ø 180 x 37	02/97→ →07/00
				92089400	ø 236 x 18 x 45			94025900	ø 180 x 46	02/97→ →07/00
420 GLS D	05/96→	578400 48 / 65	Sum	2165001	[+] 21650 15			91045801	ø 180 x 37	
				92089400	ø 236 x 18 x 45			94025900	ø 180 x 46	12/98→
PERSONA 400 Schrägheck (C9_C, C9_S) 01/94→ → PERSONA 400 Hatchback (C9_C, C9_S), Page 933										
PERSONA Saloon (C9_S) 01/94→ → PERSONA 400 (C9_S), Page 933										
PERSONA Saloon 03/08→										
1.6	03/08→	578500 82 / 112					Bos	2426004	[+] 24260 16.3	
PERSONA Stufenheck (C9_S) 01/94→ → PERSONA 400 (C9_S), Page 933										
PERSONA Stufenheck 03/08→ → PERSONA Saloon, Page 934										
PUTRA Coupe 01/95→11/00										
1.8 EXi	01/95→11/00	578600 103 / 140	Sum	2164701	[+] 21647 16		Ake	2187202	[+] 21872 14.5	
				92135000	ø 256 x 24 x 45			82511600		
								PRO 92171203	ø 260 x 10 x 41	
SATRIA (C9_M) 03/96→ → PERSONA 300 (C9_M), Page 933										
SATRIA (C9_M) 04/96→										
1.3	07/96→	578700 55 / 74	Sum	2165001	[+] 21650 15			91045801	ø 180 x 37	
1.3	08/00→	55 / 75		92089300	ø 234 x 13 x 45			94025900	ø 180 x 46	
1.5	04/96→	578800 66 / 89	Sum	2165001	[+] 21650 15			91045801	ø 180 x 37	
1.5	07/00→	64 / 86		92089400	ø 236 x 18 x 45			94025900	ø 180 x 46	
1.6	07/97→	578900 70 / 94	Sum	2164701	[+] 21647 16		Ake	2187202	[+] 21872 14.5	
1.6	07/97→	83 / 111								
1.8 GTi	08/00→	103 / 140		92135000	ø 256 x 24 x 45			82511600		
								PRO 92171203	ø 260 x 10 x 41	
SATRIA NEO 02/07→09/08										
1.3	02/07→09/08	579000 70 / 95	Bos	2428801	[+] 24288 17		Bos	2426004	[+] 24260 16.3	
				92089300	ø 234 x 13 x 45					
1.6	02/07→	579100 81 / 110	Bos	2428801	[+] 24288 17		Bos	2426004	[+] 24260 16.3	
1.6	02/07→	83 / 113								
1.6	02/09→	93 / 126								
1.6 R3	02/09→	108 / 147		92089400	ø 236 x 18 x 45					
SAVVY 10/05→										
1.2	10/05→	579200 55 / 75	Ake	2397401	[–] 23974 17.8			91054000	ø 180 x 31	
			Ake	2397406	[+] 23974 17.8					
WIRA (C9_S) 01/94→ → PERSONA 400 (C9_S), Page 933										
WIRA 08/00→02/02										
1.3	08/00→	579300 55 / 74	Sum	2165001	[+] 21650 15			94025900	ø 180 x 46	
1.3	10/05→	57 / 78		92089300	ø 234 x 13 x 45					
1.5	08/00→	579400 64 / 86	Sum	2165001	[+] 21650 15		Ake	2187202	[+] 21872 14.5	⊕ rear disc brake ⊕ ABS
1.5	10/05→	67 / 91		92089400	ø 236 x 18 x 45			82511600		⊕ rear disc brake ⊕ ABS
								91045801	ø 180 x 37	⊕ rear drum brake
								PRO 92171203	ø 260 x 10 x 41	⊕ rear disc brake
								94025900	ø 180 x 46	⊕ rear drum brake
1.6	08/00→02/02	579500 70 / 95	Sum	2164701	[+] 21647 16		Ake	2187202	[+] 21872 14.5	
1.8	08/00→12/01	99 / 135		92135000	ø 256 x 24 x 45			82511600		

N - P

WIRA 08/00→02/02

		579500											
1.6	08/00→02/02	70 / 95								PRO	92171203	ø 260 x 10 x 41	
1.8	08/00→12/01	99 / 135											

WIRA Hatchback (C9_C, C9_S) 01/94→ → PERSONA 400 Hatchback (C9_C, C9_S), Page 933

WIRA Hatchback 08/00→12/01

		579600	Sum		2165001	[+] 21650 15		Ake		2187202	[+] 21872 14.5	⊕ rear disc brake ⊕ ABS	
1.3	08/00→	55 / 74			92089400	ø 236 x 18 x 45				82511600		⊕ rear disc brake ⊕ ABS	
1.3	10/05→	57 / 78								91045801	ø 180 x 37	⊕ rear drum brake	
1.5	08/00→	64 / 86							PRO	92171203	ø 260 x 10 x 41	⊕ rear disc brake	
1.5	10/05→	67 / 91								94025900	ø 180 x 46	⊕ rear drum brake	
		579700	Sum		2164701	[+] 21647 16		Ake		2187202	[+] 21872 14.5		
1.8	08/00→12/01	99 / 135			92135000	ø 256 x 24 x 45				82511600			
									PRO	92171203	ø 260 x 10 x 41		

WIRA Saloon 08/00→02/02 → WIRA, Page 934

WIRA Schrägheck (C9_C, C9_S) 01/94→ → PERSONA 400 Hatchback (C9_C, C9_S), Page 933

WIRA Schrägheck 08/00→12/01 → WIRA Hatchback, Page 935

WIRA Stufenheck 08/00→02/02 → WIRA, Page 934

G-MODELL (W 461) 04/92→

		579800	Per		2078401	[o] 20784 18		Bos		2302101	[o] 23021 18.9	⊕ rear disc brake Bosch	
230 GE	06/93→	92 / 125			98020900	L265	H000248→	Ate		2390101	[+] 23901 18.8	⊕ rear disc brake Teves	
290 GD/G 290 D	04/92→	70 / 95			98021302	L90	⊕ 1 plug →H000247	Bos		82061400		⊕ rear disc brake Ø 272 mm	
G 290 TD	07/97→	88 / 120	Per		82017000			Bos		82508600		⊕ rear disc brake Ø 258 mm	
					92020300	ø 303 x 16 x 83		Ate		82062900			
					92113400	ø 315 x 30 x 83	→axle R163399	Per		1302001	[o] 13020 7.8	⊕ rear drum brake 260 x 54 -brake	
								Per		1302002	[o] 13020 8.7	⊕ rear drum brake 260 x 54 -brake	
									PRO	92137503	ø 258 x 12 x 96.5	⊕ rear disc brake	
									PRO	92137603	ø 272 x 16 x 96.7	⊕ rear disc brake	
										94002600	ø 260,0 x 64	⊕ rear drum brake 260 x 54 -brake	

G-MODELL (W 463) 09/89→

		579900	Per		2078401	[o] 20784 18		Bos		2302101	[o] 23021 18.9	⊕ rear disc brake Bosch	
300 GD	09/89→	83 / 113			98020900	L265	H000248→	Ate		2390101	[+] 23901 18.8	⊕ rear disc brake Teves	
300 GE	06/90→	125 / 170			98021302	L90	⊕ 1 plug →H000247	Bos		82061400		⊕ rear disc brake Ø 272 mm	
350 G Turbo D	09/91→	100 / 136	Per		82017000			Bos		82508600		⊕ rear disc brake Ø 258 mm	
G 300 TD	08/96→	130 / 177			92020300	ø 303 x 16 x 83		Ate		82062900			
					92113400	ø 315 x 30 x 83	→axle R163399	Per		1302001	[o] 13020 7.8	⊕ rear drum brake 260 x 54 -brake	
								Per		1302002	[o] 13020 8.7	⊕ rear drum brake 260 x 54 -brake	
									PRO	92137503	ø 258 x 12 x 96.5	⊕ rear disc brake	
									PRO	92137603	ø 272 x 16 x 96.7	⊕ rear disc brake	
										94002600	ø 260,0 x 64	⊕ rear drum brake 260 x 54 -brake	
		580000	Per		2078401	[o] 20784 18		Bos		2302101	[o] 23021 18.9	⊕ rear disc brake Bosch	
G 36 AMG	01/95→	200 / 272	Per		82017000			Ate		2390101	[+] 23901 18.8	⊕ rear disc brake Teves	
G 500	04/98→	218 / 296											

		kW / hp										
G-MODELL (W 463) 09/89→												
		580000										
G 36 AMG	01/95→	200 / 272										
G 500	04/98→	218 / 296										
				92113400	ø 315 x 30 x 83	→axle R163399	Bos		**82061400**		⊕ rear disc brake Ø 272 mm
							Bos		**82508600**		⊕ rear disc brake Ø 258 mm
							Ate		**82062900**		⊕ rear disc brake
							Per		**1302001**	[o] 13020 7.8	⊕ rear drum brake
							Per		**1302002**	[o] 13020 8.7	⊕ rear drum brake
								PRO	**92137503**	ø 258 x 12 x 96.5	⊕ rear disc brake
								PRO	**92137603**	ø 272 x 16 x 96.7	⊕ rear disc brake
									94002600	ø 260,0 x 64	⊕ rear drum brake
		580100	Per	**2078401**	[o] 20784 18		Bos		**2302101**	[o] 23021 18.9	Bosch
G 55 AMG	04/99→	260 / 354	Per	**82017000**			Ate		**2390101**	[+] 23901 18.8	Teves
				92113400	ø 315 x 30 x 83	→axle R163399	Bos		**82061400**		Ø 272 mm
							Bos		**82508600**		Ø 258 mm
							Ate		**82062900**		
								PRO	**92137503**	ø 258 x 12 x 96.5	
								PRO	**92137603**	ø 272 x 16 x 96.7	

kW / hp

19 II (B/C53_) 10/96→06/01

		580200	Luc		2146306	[–] 21463 18.2	Lucas	Ben		2097401	[o] 20974 11	⊕ ABS
1.4	10/96→06/01	48 / 65										
1.8	10/96→06/01	86 / 117	Ben		2090506	[+] 20905 18	Bendix	Ben		82029500		⊕ ABS
			Luc		2146304	[+] 21463 18.2	Lucas	Ben		91037901	ø 203.2 x 39	
				PRO	92100903	ø 259 x 20.6 x 41			ABS	92242100	ø 238 x 8 x 74.6	⊕ ABS
										92070300	ø 238 x 8 x 74.6	⊕ ABS
										94019700	ø 203,3 x 50.5	
		580300	Luc		2146306	[–] 21463 18.2		Ben		2097401	[o] 20974 11	⊕ rear disc brake
1.4	10/96→06/01	60 / 82	Ben		2090506	[+] 20905 18		Ben		82029500		⊕ rear disc brake
			Luc		2146304	[+] 21463 18.2		Luc		91031800	ø 180 x 40	⊕ rear drum brake
				PRO	92036103	ø 238 x 12 x 41		Ben		91037400	ø 180 x 40	⊕ rear drum brake
					TPM0004			Luc		84031804	bore ø 20.6 ø 180 x 40	⊕ rear drum brake
								Ben		84037406	bore ø 20.6 ø 180 x 40	⊕ rear drum brake
										94023600	ø 180,2 x 53.5	⊕ rear drum brake
		580400	Luc		2146306	[–] 21463 18.2	Lucas	Ben		2097401	[o] 20974 11	⊕ rear disc brake
1.7	10/96→06/01	69 / 94	Ben		2090506	[+] 20905 18	Bendix	Ben		82029500		
			Luc		2146304	[+] 21463 18.2	Lucas	Luc		91031800	ø 180 x 40	Lucas ⊕ rear drum brake
			Luc		82062800		⊕ ABS	Ben		91037400	ø 180 x 40	Bendix ⊕ rear drum brake
				PRO	92036103	ø 238 x 12 x 41		Ben		91037901	ø 203.2 x 39	Bendix ⊕ rear drum brake
				PRO	92036203	ø 238 x 20 x 41		Ben		97002800		Lucas ⊕ rear drum brake
								Ben		84037404	bore ø 20.6 ø 180 x 40	Bendix ⊕ rear drum brake
									ABS	92242100	ø 238 x 8 x 74.6	
										92070300	ø 238 x 8 x 74.6	
										94013500	ø 180 x 53.5	⊕ rear drum brake
		580500	Luc		2146306	[–] 21463 18.2	Lucas	Ben		2159701	[o] 21597 11	
1.8 16V	10/96→06/01	104 / 141	Ben		2090506	[+] 20905 18	Bendix	Ben		82029500		
			Luc		2146304	[+] 21463 18.2	Lucas		ABS	92242100	ø 238 x 8 x 74.6	
				PRO	92100903	ø 259 x 20.6 x 41				92070300	ø 238 x 8 x 74.6	
		580600	Luc		2146306	[–] 21463 18.2	Lucas	Ben		2097401	[o] 20974 11	⊕ rear disc brake
1.9 D	10/96→06/01	52 / 71										
1.9 D	10/96→06/01	71 / 97	Ben		2090506	[+] 20905 18	Bendix	Ben		82029500		
			Luc		2146304	[+] 21463 18.2	Lucas	Luc		91031800	ø 180 x 40	Lucas ⊕ rear drum brake
			Luc		82062800		⊕ ABS	Ben		91037400	ø 180 x 40	Bendix ⊕ rear drum brake
				PRO	92036103	ø 238 x 12 x 41		Ben		91037901	ø 203.2 x 39	Bendix ⊕ rear drum brake
				PRO	92036203	ø 238 x 20 x 41		Ben		97002800		Lucas ⊕ rear drum brake
									ABS	92242100	ø 238 x 8 x 74.6	
										92070300	ø 238 x 8 x 74.6	
										94013500	ø 180 x 53.5	⊕ rear drum brake

19 II Cabriolet (D53_, 853_) 10/96→06/01

		580700	Luc		2146306	[–] 21463 18.2		Ben		2097401	[o] 20974 11	⊕ rear disc brake
1.7	10/96→06/01	69 / 94	Luc		2146304	[+] 21463 18.2		Ben		82029500		⊕ rear disc brake
				PRO	92036203	ø 238 x 20 x 41	⊖ ABS	Luc		91031800	ø 180 x 40	⊕ rear drum brake

R - S

		kW / hp										
19 II Cabriolet (D53_, 853_) 10/96→06/01												
		580700		PRO	92100903	ø 259 x 20.6 x 41	⊕ ABS	Ben		91037400	ø 180 x 40	⊕ rear drum brake
1.7	10/96→06/01	69 / 94			TPM0004			Luc		84031804	bore ø 20.6 ø 180 x 40	⊕ rear drum brake
								Ben		84037406	bore ø 20.6 ø 180 x 40	⊕ rear drum brake
									ABS	92242100	ø 238 x 8 x 74.6	⊕ rear disc brake
										92070300	ø 238 x 8 x 74.6	⊕ rear disc brake
										94023600	ø 180,2 x 53.5	⊕ rear drum brake
		580800	Luc		2146306	[–] 21463 18.2	Lucas	Ben		2159701	[o] 21597 11	
1.8	10/96→06/01	86 / 117	Ben		2090506	[+] 20905 18	Bendix	Ben		82029500		
			Luc		2146304	[+] 21463 18.2	Lucas		ABS	92242100	ø 238 x 8 x 74.6	
				PRO	92100903	ø 259 x 20.6 x 41				92070300	ø 238 x 8 x 74.6	
19 II Chamade (L53_) 10/96→06/01												
		580900	Luc		2146306	[–] 21463 18.2		Luc		91031800	ø 180 x 40	⊖ ABS
1.4	10/96→06/01	48 / 65	Ben		2090506	[+] 20905 18		Ben		91037400	ø 180 x 40	⊖ ABS
1.9 D	10/96→06/01	71 / 97	Luc		2146304	[+] 21463 18.2			ABS	92242100	ø 238 x 8 x 74.6	⊕ ABS
				PRO	92036103	ø 238 x 12 x 41				94023600	ø 180,2 x 53.5	⊖ ABS
					TPM0004							
		581000	Luc		2146306	[–] 21463 18.2		Ben		2097401	[o] 20974 11	⊕ rear disc brake
1.4	10/96→06/01	60 / 82	Ben		2090506	[+] 20905 18		Ben		82029500		⊕ rear disc brake
			Luc		2146304	[+] 21463 18.2		Luc		91031800	ø 180 x 40	⊕ rear drum brake
				PRO	92036103	ø 238 x 12 x 41		Ben		91037400	ø 180 x 40	⊕ rear drum brake
					TPM0004			Luc		84031804	bore ø 20.6 ø 180 x 40	⊕ rear drum brake
								Ben		84037406	bore ø 20.6 ø 180 x 40	⊕ rear drum brake
										94023600	ø 180,2 x 53.5	⊕ rear drum brake
		581100	Luc		2146306	[–] 21463 18.2		Ben		2097401	[o] 20974 11	⊕ rear disc brake
1.4	10/98→06/01	70 / 95										
1.6	10/96→06/01	55 / 75	Luc		2146304	[+] 21463 18.2		Ben		82029500		⊕ rear disc brake
1.8	10/96→06/01	86 / 117		PRO	92100903	ø 259 x 20.6 x 41		Ben		91037901	ø 203.2 x 39	⊕ rear drum brake
					TPM0004					92070300	ø 238 x 8 x 74.6	⊕ rear disc brake
										94019700	ø 203,3 x 50.5	⊕ rear drum brake
		581200	Luc		2146306	[–] 21463 18.2	Lucas	Ben		2097401	[o] 20974 11	⊕ rear disc brake
1.9 D	07/98→06/01	75 / 102	Ben		2090506	[+] 20905 18	Bendix	Ben		82029500		
			Luc		2146304	[+] 21463 18.2	Lucas	Luc		91031800	ø 180 x 40	Lucas ⊕ rear drum brake
				PRO	92036103	ø 238 x 12 x 41		Ben		91037400	ø 180 x 40	Bendix ⊕ rear drum brake
				PRO	92036203	ø 238 x 20 x 41		Ben		91037901	ø 203.2 x 39	Bendix ⊕ rear drum brake
								Ben		97002800		Lucas ⊕ rear drum brake
								Luc		84031804	bore ø 20.6 ø 180 x 40	Lucas ⊕ rear drum brake
								Ben		84037406	bore ø 20.6 ø 180 x 40	Bendix ⊕ rear drum brake
								Ben		84037902	bore ø 19 ø 203.2 x 39	Bendix ⊕ rear drum brake
									ABS	92242100	ø 238 x 8 x 74.6	
										92070300	ø 238 x 8 x 74.6	
										94013500	ø 180 x 53.5	⊕ rear drum brake

		kW / hp										
19 II Chamade (L53_) 10/96→06/01												
		581200										
1.9 D	07/98→06/01	75 / 102								94019700	ø 203,3 x 50.5	
19 Mk II (B/C53_) 10/96→06/01 → 19 II (B/C53_), Page 937												
19 Mk II Cabriolet (D53_, 853_) 10/96→06/01 → 19 II Cabriolet (D53_, 853_), Page 937												
19 Mk II Chamade (L53_) 10/96→06/01 → 19 II Chamade (L53_), Page 938												
19 Mk II Convertible (D53_, 853_) 10/96→06/01 → 19 II Cabriolet (D53_, 853_), Page 937												
19 Mk II Saloon (L53_) 10/96→06/01 → 19 II Chamade (L53_), Page 938												
AVANTIME (DE0_) 09/01→05/03												
		581300	Luc		2497101	[–] 24971 18.4		Luc		2355406	[–] 23554 16.2	
2.0 16V Turbo (DE0U, DE0V)	11/01→05/03	120 / 163										
2.2 dCi (DE01)	05/02→05/03	110 / 150	Luc		82063500			Luc		82503100		
3.0 V6 (DE04, DE0T)	09/01→05/03	152 / 207			92112300	ø 305 x 28 x 44		Luc		82063300		
					TPM0004					92096300	ø 265 x 10.5 x 54.3	
CAPTUR 06/13→												
		581400	Luc		2397301	[–] 23973 17.3				91069300	ø 228.6 x 42	
0.9 TCe 90	06/13→	66 / 90			TPM0004			Bos		84069300	bore ø 22 ø 228.6 x 42	
		581500	Ate		2491401	[–] 24914 18				91069300	ø 228.6 x 42	
1.2 TCe 120	06/13→	88 / 120										
1.5 dCi 100	06/13→	78 / 106			TPM0004			Bos		84069300	bore ø 22 ø 228.6 x 42	
1.5 dCi 90	06/13→	66 / 90										
CLIO II (BB0/1/2_, CB0/1/2_) 09/98→06/09												
		581600	Luc		2146306	[–] 21463 18.2		Luc		91048000	ø 203.2 x 38	Lucas ⊕ ABS
1.0	09/99→12/06	43 / 58										
1.0	02/00→05/01	40 / 54	Luc		2146304	[+] 21463 18.2		Bos		91053700	ø 180 x 42	Bosch ⊖ ABS
			Luc		82062800		⊕ ABS	Bos		91060200	ø 203.2 x 38	Bosch ⊕ ABS
				PRO	92036203	ø 238 x 20 x 41		Bos		97006400		Bosch ⊖ ABS
					TPM0004			Ben		97010400		Lucas ⊕ ABS
										97031000		Bosch ⊕ ABS
								Luc		83048006	bore ø 20.6 ø 203.2 x 38	Lucas ⊕ ABS
								Luc		84048008	bore ø 20.6 ø 203.2 x 38	Lucas ⊕ ABS
								Luc		84048002	bore ø 17.5 ø 203.2 x 38	Lucas ⊕ ABS
								Bos		84053700	bore ø 19 ø 180 x 42	Bosch ⊖ ABS
								Bos		84060200	bore ø 17.5 ø 203.2 x 38	Bosch ⊕ ABS
										94019700	ø 203,3 x 50.5	⊕ ABS
										94023600	ø 180,2 x 53.5	⊖ ABS
		581700	Luc		2146306	[–] 21463 18.2		Luc		91048000	ø 203.2 x 38	Lucas ⊕ ABS
1.0	06/01→04/05	52 / 71										
1.6 16V	10/01→12/08	82 / 112	Luc		2146304	[+] 21463 18.2		Bos		91053700	ø 180 x 42	Bosch ⊖ ABS
			Luc		82062800		⊕ ABS	Bos		91060200	ø 203.2 x 38	Bosch ⊕ ABS
				PRO	92036103	ø 238 x 12 x 41		Bos		97006400		
				PRO	92036203	ø 238 x 20 x 41	⊕ ABS	Ben		97010400		Lucas ⊕ ABS
				PRO	92100903	ø 259 x 20.6 x 41				97031000		Bosch ⊕ ABS
					TPM0004			Luc		83048006	bore ø 20.6 ø 203.2 x 38	Lucas ⊕ ABS
								Luc		84048008	bore ø 20.6 ø 203.2 x 38	Lucas ⊕ ABS
								Luc		84048002	bore ø 17.5 ø 203.2 x 38	Lucas ⊕ ABS
								Bos		84053700	bore ø 19 ø 180 x 42	Bosch ⊖ ABS
								Bos		84060200	bore ø 17.5 ø 203.2 x 38	Bosch ⊕ ABS
										94019700	ø 203,3 x 50.5	⊕ ABS →12/02

R - S

CLIO II (BB0/1/2_, CB0/1/2_) 09/98→06/09

		kW / hp											
		581700											
1.0	06/01→04/05	52 / 71								94023600	ø 180,2 x 53.5	⊖ ABS	
1.6 16V	10/01→12/08	82 / 112								94027500	ø 203,3 x 50.5	⊕ ABS 12/02→	
		581800	Luc		2146306	[–] 21463 18.2		Ben		2097401	[o] 20974 11		
1.0 Flex	11/05→	57 / 76	Luc		2146304	[+] 21463 18.2		Ben		82029500			
1.2 16V	06/06→	54 / 73	Luc		82062800		⊕ ABS	Luc		91048000	ø 203.2 x 38	Lucas ⊕ ABS	
1.5 dCi	01/04→	74 / 100		PRO	92100903	ø 259 x 20.6 x 41		Bos		91053700	ø 180 x 42	Bosch ⊖ ABS	
1.5 dCi (B/C2J)	08/04→	50 / 68			TPM0004			Bos		91060200	ø 203.2 x 38	Bosch ⊕ ABS	
1.6	11/04→02/09	81 / 110						Bos		97006400		Bosch ⊖ ABS	
1.6 Hi-Flex (CB0H)	01/05→02/10	86 / 117						Ben		97010400		Lucas ⊕ ABS	
										97031000		Bosch ⊕ ABS	
								Luc		83048006	bore ø 20.6 ø 203.2 x 38	Lucas ⊕ ABS	
								Luc		84048008	bore ø 20.6 ø 203.2 x 38	Lucas ⊕ ABS	
								Luc		84048002	bore ø 17.5 ø 203.2 x 38	Lucas ⊕ ABS	
								Bos		84053700	bore ø 19 ø 180 x 42	Bosch ⊖ ABS	
								Bos		84060200	bore ø 17.5 ø 203.2 x 38	Bosch ⊕ ABS	
										92154000	ø 238 x 8 x 74.6		
										94023600	ø 180,2 x 53.5	⊖ ABS	
										94027500	ø 203,3 x 50.5	⊕ ABS	
		581900	Luc		2146306	[–] 21463 18.2		Ben		2097401	[o] 20974 11		
1.2	06/01→10/03	55 / 75	Luc		2146304	[+] 21463 18.2		Ben		82029500			
			Luc		82062800		⊕ ABS	Luc		91048000	ø 203.2 x 38	Lucas ⊕ ABS	
				PRO	92036103	ø 238 x 12 x 41	⊖ ABS	Bos		91053700	ø 180 x 42	Bosch ⊖ ABS	
				PRO	92036203	ø 238 x 20 x 41	⊕ ABS	Bos		91060200	ø 203.2 x 38	Bosch ⊕ ABS	
				PRO	92100903	ø 259 x 20.6 x 41	⊕ ABS ⊕ autom. clim. contr.	Bos		97006400		Bosch ⊖ ABS	
					TPM0004			Ben		97010400		Lucas ⊕ ABS	
										97031000		Bosch ⊕ ABS	
								Luc		83048006	bore ø 20.6 ø 203.2 x 38	Lucas ⊕ ABS	
								Luc		84048008	bore ø 20.6 ø 203.2 x 38	Lucas ⊕ ABS	
								Luc		84048002	bore ø 17.5 ø 203.2 x 38	Lucas ⊕ ABS	
								Bos		84053700	bore ø 19 ø 180 x 42	Bosch ⊖ ABS	
								Bos		84060200	bore ø 17.5 ø 203.2 x 38	Bosch ⊕ ABS	
										92154000	ø 238 x 8 x 74.6		
										94019700	ø 203,3 x 50.5	⊕ ABS →12/02	
										94023600	ø 180,2 x 53.5	⊖ ABS	
										94027500	ø 203,3 x 50.5	⊕ ABS 12/02→	
		582000	Luc		2146306	[–] 21463 18.2		Ben		2097401	[o] 20974 11		
1.2 (BB0A, BB0F, BB10, BB1K, BB28, BB2D, BB2H, CB0A...)	09/98→	43 / 58	Luc		2146304	[+] 21463 18.2		Luc		91048000	ø 203.2 x 38	Lucas ⊕ ABS	
			Luc		82062800		⊕ ABS	Bos		91053700	ø 180 x 42	Bosch ⊖ ABS	
				PRO	92036103	ø 238 x 12 x 41	⊖ ABS	Bos		91060200	ø 203.2 x 38	Bosch ⊕ ABS	
				PRO	92036203	ø 238 x 20 x 41	⊕ ABS →06/01	Bos		97006400		Bosch ⊖ ABS	

CLIO II (BB0/1/2_, CB0/1/2_) 09/98→06/09

582000 1.2 (BB0A, BB0F, BB10, BB1K, BB28, BB2D, BB2H, CB0A...)	09/98→	43 / 58		PRO	92100903	ø 259 x 20.6 x 41	06/01→	Ben		97010400		Lucas ⊕ ABS
					TPM0004					97031000		Bosch ⊕ ABS
								Luc		83048006	bore ø 20.6 ø 203.2 x 38	Lucas ⊕ ABS
								Luc		84048008	bore ø 20.6 ø 203.2 x 38	Lucas ⊕ ABS
								Luc		84048002	bore ø 17.5 ø 203.2 x 38	Lucas ⊕ ABS
								Bos		84053700	bore ø 19 ø 180 x 42	Bosch ⊖ ABS
								Bos		84060200	bore ø 17.5 ø 203.2 x 38	Bosch ⊕ ABS
								Bos		84060201	bore ø 19 ø 203.2 x 38	Bosch ⊕ ABS →10/07
										92081200	ø 238 x 8 x 74.6	
										94019700	ø 203,3 x 50.5	⊕ ABS →02/02
										94023600	ø 180,2 x 53.5	⊖ ABS
										94027500	ø 203,3 x 50.5	⊕ ABS 12/02→
582100 1.2 (BB0A, CB0A)	03/99→05/01	44 / 60	Luc		2146306	[–] 21463 18.2		Luc		91048000	ø 203.2 x 38	Lucas ⊕ ABS
			Luc		2146304	[+] 21463 18.2		Bos		91053700	ø 180 x 42	Bosch ⊖ ABS
			Luc		82062800		⊕ ABS	Bos		91060200	ø 203.2 x 38	Bosch ⊕ ABS
				PRO	92036103	ø 238 x 12 x 41	⊖ ABS	Bos		97006400		Bosch ⊖ ABS
				PRO	92036203	ø 238 x 20 x 41	⊕ ABS	Ben		97010400		Lucas ⊕ ABS
					TPM0004					97031000		Bosch ⊕ ABS
								Luc		83048006	bore ø 20.6 ø 203.2 x 38	Lucas ⊕ ABS
								Luc		84048008	bore ø 20.6 ø 203.2 x 38	Lucas ⊕ ABS
								Luc		84048002	bore ø 17.5 ø 203.2 x 38	Lucas ⊕ ABS
								Bos		84053700	bore ø 19 ø 180 x 42	Bosch ⊖ ABS
								Bos		84060200	bore ø 17.5 ø 203.2 x 38	Bosch ⊕ ABS
								Bos		84060201	bore ø 19 ø 203.2 x 38	Bosch ⊖ ABS
										94019700	ø 203,3 x 50.5	⊕ ABS
										94023600	ø 180,2 x 53.5	⊖ ABS
582200 1.2 16V (BB05, BB0W, BB11, BB27, BB2T, BB2U, BB2V, CB05...)	06/01→	55 / 75	Luc		2146306	[–] 21463 18.2		Ben		2097401	[o] 20974 11	
			Luc		2146304	[+] 21463 18.2		Ben		82029500		
			Luc		82062800		⊕ ABS	Luc		91048000	ø 203.2 x 38	Lucas ⊕ ABS
				PRO	92036103	ø 238 x 12 x 41	⊖ ABS	Bos		91053700	ø 180 x 42	Bosch ⊖ ABS
				PRO	92036203	ø 238 x 20 x 41	⊕ ABS	Bos		91060200	ø 203.2 x 38	Bosch ⊕ ABS
				PRO	92100903	ø 259 x 20.6 x 41	⊕ ABS ⊕ autom. clim. contr.	Bos		97006400		Bosch ⊖ ABS
					TPM0004			Ben		97010400		Lucas ⊕ ABS
										97031000		Bosch ⊕ ABS
								Luc		83048006	bore ø 20.6 ø 203.2 x 38	Lucas ⊕ ABS
								Luc		84048008	bore ø 20.6 ø 203.2 x 38	Lucas ⊕ ABS
								Luc		84048002	bore ø 17.5 ø 203.2 x 38	Lucas ⊕ ABS
								Bos		84053700	bore ø 19 ø 180 x 42	Bosch ⊖ ABS
								Bos		84060200	bore ø 17.5 ø 203.2 x 38	Bosch ⊕ ABS
										92154000	ø 238 x 8 x 74.6	

R - S

		kW / hp											
CLIO II (BB0/1/2_, CB0/1/2_) 09/98→06/09													
1.2 16V (BB05, BB0W, BB11, BB27, BB2T, BB2U, BB2V, CB05...)	06/01→	582200 55 / 75								94019700	ø 203,3 x 50.5	⊕ ABS →02/02	
										94023600	ø 180,2 x 53.5	⊖ ABS	
										94027500	ø 203,3 x 50.5	⊕ ABS 12/02→	
1.2 LPG	09/98→06/09	582300 43 / 58	Luc		2146306	[–] 21463 18.2		Ben		2097401	[o] 20974 11		
			Luc		2146304	[+] 21463 18.2		Luc		91048000	ø 203.2 x 38	Lucas ⊕ ABS	
			Luc		82062800		⊕ ABS	Bos		91053700	ø 180 x 42	Bosch ⊖ ABS	
				PRO	92036103	ø 238 x 12 x 41	⊖ ABS	Bos		91060200	ø 203.2 x 38	Bosch ⊕ ABS	
				PRO	92036203	ø 238 x 20 x 41	⊕ ABS →06/01	Bos		97006400		Bosch ⊖ ABS	
				PRO	92100903	ø 259 x 20.6 x 41	06/01→	Ben		97010400		Lucas ⊕ ABS	
					TPM0004					97031000		Bosch ⊕ ABS	
								Luc		83048006	bore ø 20.6 ø 203.2 x 38	Lucas ⊕ ABS	
								Luc		84048008	bore ø 20.6 ø 203.2 x 38	Lucas ⊕ ABS	
								Luc		84048002	bore ø 17.5 ø 203.2 x 38	Lucas ⊕ ABS	
								Bos		84053700	bore ø 19 ø 180 x 42	Bosch ⊖ ABS	
								Bos		84060200	bore ø 17.5 ø 203.2 x 38	Bosch ⊕ ABS	
										92081200	ø 238 x 8 x 74.6		
										94019700	ø 203,3 x 50.5	⊕ ABS →02/02	
										94023600	ø 180,2 x 53.5	⊖ ABS	
										94027500	ø 203,3 x 50.5	⊕ ABS 12/02→	
1.4 (B/CB0C)	09/98→05/05	582400 55 / 75	Luc		2146306	[–] 21463 18.2		Luc		91048000	ø 203.2 x 38	Lucas ⊕ ABS	
			Luc		2146304	[+] 21463 18.2		Bos		91053700	ø 180 x 42	Bosch ⊖ ABS	
			Luc		82062800		⊕ ABS	Bos		91060200	ø 203.2 x 38	Bosch ⊕ ABS	
				PRO	92036103	ø 238 x 12 x 41	⊖ ABS	Bos		97006400		Bosch ⊖ ABS	
				PRO	92036203	ø 238 x 20 x 41	⊕ ABS	Ben		97010400		Lucas ⊕ ABS	
					TPM0004					97031000		Bosch ⊕ ABS	
								Luc		83048006	bore ø 20.6 ø 203.2 x 38	Lucas ⊕ ABS	
								Luc		84048008	bore ø 20.6 ø 203.2 x 38	Lucas ⊕ ABS	
								Luc		84048002	bore ø 17.5 ø 203.2 x 38	Lucas ⊕ ABS	
								Bos		84053700	bore ø 19 ø 180 x 42	Bosch ⊖ ABS	
								Bos		84060200	bore ø 17.5 ø 203.2 x 38	Bosch ⊕ ABS	
										94017900	ø 200,0 x 55	⊕ ABS 12/02→	
										94023600	ø 180,2 x 53.5	⊖ ABS	
										94027500	ø 203,3 x 50.5	⊕ ABS 02/02→	
1.4 16V (B/CB0L)	10/99→09/04	582500 70 / 95	Luc		2146306	[–] 21463 18.2		Luc		91048000	ø 203.2 x 38	Lucas ⊕ ABS	
			Luc		2146304	[+] 21463 18.2		Bos		91053700	ø 180 x 42	Bosch ⊖ ABS	
			Luc		82062800		⊕ ABS	Bos		91060200	ø 203.2 x 38	Bosch ⊕ ABS	
				PRO	92036103	ø 238 x 12 x 41	⊖ ABS	Bos		97006400		Bosch ⊖ ABS	
				PRO	92036203	ø 238 x 20 x 41	⊕ ABS	Ben		97010400		Lucas ⊕ ABS	
					TPM0004					97031000		Bosch ⊕ ABS	
								Luc		83048006	bore ø 20.6 ø 203.2 x 38	Lucas ⊕ ABS	

CLIO II (BB0/1/2_, CB0/1/2_) 09/98→06/09

			kW / hp										
582500													
1.4 16V (B/CB0L)	10/99→09/04	70 / 95							Luc		84048008	bore ø 20.6 ø 203.2 x 38	Lucas ⊕ ABS
									Luc		84048002	bore ø 17.5 ø 203.2 x 38	Lucas ⊕ ABS
									Bos		84053700	bore ø 19 ø 180 x 42	Bosch ⊖ ABS
									Bos		84060200	bore ø 17.5 ø 203.2 x 38	Bosch ⊕ ABS
											94017900	ø 200,0 x 55	⊕ ABS
											94023600	ø 180,2 x 53.5	⊖ ABS
582600													
1.4 16V (B/CB0P)	08/00→	72 / 98		Luc		2146306	[–] 21463 18.2		Luc		91048000	ø 203.2 x 38	Lucas ⊕ ABS
				Luc		2146304	[+] 21463 18.2		Bos		91053700	ø 180 x 42	Bosch ⊖ ABS
				Luc		82062800		⊕ ABS	Bos		91060200	ø 203.2 x 38	Bosch ⊕ ABS
					PRO	92036203	ø 238 x 20 x 41	→06/01	Bos		97006400		Bosch ⊖ ABS
					PRO	92100903	ø 259 x 20.6 x 41	06/01→	Ben		97010400		Lucas ⊕ ABS
						TPM0004					97031000		Bosch ⊕ ABS
									Luc		83048006	bore ø 20.6 ø 203.2 x 38	Lucas ⊕ ABS
									Luc		84048008	bore ø 20.6 ø 203.2 x 38	Lucas ⊕ ABS
									Luc		84048002	bore ø 17.5 ø 203.2 x 38	Lucas ⊕ ABS
									Bos		84053700	bore ø 19 ø 180 x 42	Bosch ⊖ ABS
									Bos		84060200	bore ø 17.5 ø 203.2 x 38	Bosch ⊕ ABS
											94019700	ø 203,3 x 50.5	⊕ ABS →02/02
											94023600	ø 180,2 x 53.5	⊖ ABS
											94027500	ø 203,3 x 50.5	⊕ ABS 02/02→
582700													
1.5 dCi	06/01→12/06	42 / 57		Luc		2146306	[–] 21463 18.2		Luc		91048000	ø 203.2 x 38	Lucas ⊕ ABS
1.5 dCi (B/CB3M)	06/05→	47 / 64		Luc		2146304	[+] 21463 18.2		Bos		91053700	ø 180 x 42	Bosch ⊖ ABS
1.5 dCi (B/CB3N)	02/07→	62 / 84		Luc		82062800		⊕ ABS	Bos		91060200	ø 203.2 x 38	Bosch ⊕ ABS
					PRO	92100903	ø 259 x 20.6 x 41		Bos		97006400		Bosch ⊖ ABS
						TPM0004			Ben		97010400		Lucas ⊕ ABS
											97031000		Bosch ⊕ ABS
									Luc		83048006	bore ø 20.6 ø 203.2 x 38	Lucas ⊕ ABS
									Luc		84048008	bore ø 20.6 ø 203.2 x 38	Lucas ⊕ ABS
									Luc		84048002	bore ø 17.5 ø 203.2 x 38	Lucas ⊕ ABS
									Bos		84053700	bore ø 19 ø 180 x 42	Bosch ⊖ ABS
									Bos		84060200	bore ø 17.5 ø 203.2 x 38	Bosch ⊕ ABS
											94023600	ø 180,2 x 53.5	⊖ ABS
											94027500	ø 203,3 x 50.5	⊕ ABS
582800													
1.5 dCi (B/CB03)	06/01→10/03	59 / 80		Luc		2146306	[–] 21463 18.2		Ben		2097401	[o] 20974 11	⊕ ESP
1.5 dCi (B/CB08)	06/01→	60 / 82		Luc		2146304	[+] 21463 18.2		Ben		82029500		
				Luc		82062800		⊕ ABS	Luc		91048000	ø 203.2 x 38	Lucas ⊕ ABS
					PRO	92100903	ø 259 x 20.6 x 41		Bos		91053700	ø 180 x 42	Bosch ⊖ ABS
						TPM0004			Bos		91060200	ø 203.2 x 38	Bosch ⊕ ABS
									Bos		97006400		Bosch ⊖ ABS
									Ben		97010400		Lucas ⊕ ABS

R - S

30 kW / hp

CLIO II (BB0/1/2_, CB0/1/2_) 09/98→06/09

1.5 dCi (B/CB03)	06/01→10/03	582800 59 / 80							97031000		Bosch ⊕ ABS
1.5 dCi (B/CB08)	06/01→	60 / 82						Luc	83048006	bore ø 20.6 ø 203.2 x 38	Lucas ⊕ ABS
								Luc	84048008	bore ø 20.6 ø 203.2 x 38	Lucas ⊕ ABS
								Luc	84048002	bore ø 17.5 ø 203.2 x 38	Lucas ⊕ ABS
								Bos	84053700	bore ø 19 ø 180 x 42	Bosch ⊖ ABS
								Bos	84060200	bore ø 17.5 ø 203.2 x 38	Bosch ⊕ ABS
									92154000	ø 238 x 8 x 74.6	⊕ ESP 11/02→
									92231700	ø 238 x 8 x 74.6	⊕ ESP →11/02
									94019700	ø 203,3 x 50.5	⊕ ABS →02/02
									94023600	ø 180,2 x 53.5	⊖ ABS
									94027500	ø 203,3 x 50.5	⊕ ABS 12/02→
1.5 dCi (B/CB07)	06/01→	582900 48 / 65	Luc		2146306	[–] 21463 18.2		Ben	2097401	[o] 20974 11	
			Luc		2146304	[+] 21463 18.2		Luc	91048000	ø 203.2 x 38	Lucas ⊕ ABS
			Luc		82062800		⊕ ABS	Bos	91053700	ø 180 x 42	Bosch ⊖ ABS
				PRO	92100903	ø 259 x 20.6 x 41		Bos	91060200	ø 203.2 x 38	Bosch ⊕ ABS
					TPM0004			Bos	97006400		Bosch ⊖ ABS
								Ben	97010400		Lucas ⊕ ABS
									97031000		Bosch ⊕ ABS
								Luc	83048006	bore ø 20.6 ø 203.2 x 38	Lucas ⊕ ABS
								Luc	84048008	bore ø 20.6 ø 203.2 x 38	Lucas ⊕ ABS
								Luc	84048002	bore ø 17.5 ø 203.2 x 38	Lucas ⊕ ABS
								Bos	84053700	bore ø 19 ø 180 x 42	Bosch ⊖ ABS
								Bos	84060200	bore ø 17.5 ø 203.2 x 38	Bosch ⊕ ABS
									92081200	ø 238 x 8 x 74.6	
									94019700	ø 203,3 x 50.5	⊕ ABS 02/02→
									94023600	ø 180,2 x 53.5	⊖ ABS
									94027500	ø 203,3 x 50.5	⊕ ABS 02/02→
1.6 (B/CB0D)	09/98→05/05	583000 66 / 90	Luc		2146306	[–] 21463 18.2		Luc	91048000	ø 203.2 x 38	Lucas ⊕ ABS
			Luc		2146304	[+] 21463 18.2		Bos	91053700	ø 180 x 42	Bosch ⊖ ABS
			Luc		82062800		⊕ ABS	Bos	91060200	ø 203.2 x 38	Bosch ⊕ ABS
				PRO	92036203	ø 238 x 20 x 41		Bos	97006400		Bosch ⊖ ABS
					TPM0004			Ben	97010400		Lucas ⊕ ABS
									97031000		Bosch ⊕ ABS
								Luc	83048006	bore ø 20.6 ø 203.2 x 38	Lucas ⊕ ABS
								Luc	84048008	bore ø 20.6 ø 203.2 x 38	Lucas ⊕ ABS
								Luc	84048002	bore ø 17.5 ø 203.2 x 38	Lucas ⊕ ABS
								Bos	84053700	bore ø 19 ø 180 x 42	Bosch ⊖ ABS
								Bos	84060200	bore ø 17.5 ø 203.2 x 38	Bosch ⊕ ABS
									94019700	ø 203,3 x 50.5	⊕ ABS →02/02
									94023600	ø 180,2 x 53.5	⊖ ABS

R - S

CLIO II (BB0/1/2_, CB0/1/2_) 09/98→06/09

		kW / hp											
1.6 (B/CB0D)	09/98→05/05	583000 66 / 90									94027500	ø 203,3 x 50.5	⊕ ABS 02/02→
1.6 16V (BB01, BB0H, BB0T, BB14, BB1D, BB1R, BB2KL...)	09/98→	583100 79 / 107	Luc		2146306	[–] 21463 18.2		Luc		91048000	ø 203.2 x 38	Lucas ⊕ ABS
			Luc		2146304	[+] 21463 18.2		Bos		91053700	ø 180 x 42	Bosch ⊖ ABS
			Luc		82062800		⊕ ABS	Bos		91060200	ø 203.2 x 38	Bosch ⊕ ABS
				PRO	92100903	ø 259 x 20.6 x 41		Bos		97006400		Bosch ⊖ ABS
					TPM0004			Ben		97010400		Lucas ⊕ ABS
										97031000		Bosch ⊕ ABS
								Luc		83048006	bore ø 20.6 ø 203.2 x 38	Lucas ⊕ ABS
								Luc		84048008	bore ø 20.6 ø 203.2 x 38	Lucas ⊕ ABS
								Luc		84048002	bore ø 17.5 ø 203.2 x 38	Lucas ⊕ ABS
								Bos		84053700	bore ø 19 ø 180 x 42	Bosch ⊖ ABS
								Bos		84060200	bore ø 17.5 ø 203.2 x 38	Bosch ⊕ ABS
										94019700	ø 203,3 x 50.5	⊕ ABS →02/02
										94023600	ø 180,2 x 53.5	⊖ ABS
										94027500	ø 203,3 x 50.5	⊕ ABS 12/02→
1.6 Flex 1.6 Flex	05/00→12/06 11/04→02/09	583200 81 / 110 85 / 115	Luc		2146306	[–] 21463 18.2		Ben		2097401	[o] 20974 11	
			Luc		2146304	[+] 21463 18.2		Ben		82029500		
				PRO	92100903	ø 259 x 20.6 x 41		Luc		91048000	ø 203.2 x 38	Lucas ⊕ ABS
					TPM0004			Bos		91053700	ø 180 x 42	Bosch ⊖ ABS
								Bos		91060200	ø 203.2 x 38	Bosch ⊕ ABS
								Bos		97006400		Bosch ⊖ ABS
								Ben		97010400		Lucas ⊕ ABS
										97031000		Bosch ⊕ ABS
								Luc		83048006	bore ø 20.6 ø 203.2 x 38	Lucas ⊕ ABS
								Luc		84048008	bore ø 20.6 ø 203.2 x 38	Lucas ⊕ ABS
								Luc		84048002	bore ø 17.5 ø 203.2 x 38	Lucas ⊕ ABS
								Bos		84053700	bore ø 19 ø 180 x 42	Bosch ⊖ ABS
								Bos		84060200	bore ø 17.5 ø 203.2 x 38	Bosch ⊕ ABS
									ABS	92154000	ø 238 x 8 x 74.6	
										94023600	ø 180,2 x 53.5	⊖ ABS
										94027500	ø 203,3 x 50.5	⊕ ABS
1.9 D (B/CB0E)	09/98→05/05	583300 47 / 64	Luc		2146306	[–] 21463 18.2		Luc		91048000	ø 203.2 x 38	Lucas ⊕ ABS
			Luc		2146304	[+] 21463 18.2		Bos		91053700	ø 180 x 42	Bosch ⊖ ABS
			Luc		82062800		⊕ ABS	Bos		91060200	ø 203.2 x 38	Bosch ⊕ ABS
				PRO	92036103	ø 238 x 12 x 41	⊖ ABS	Bos		97006400		Bosch ⊖ ABS
				PRO	92036203	ø 238 x 20 x 41	⊕ ABS	Ben		97010400		Lucas ⊕ ABS
				PRO	92100903	ø 259 x 20.6 x 41	⊕ ABS ⊕ autom. clim. contr.			97031000		Bosch ⊕ ABS
					TPM0004			Luc		83048006	bore ø 20.6 ø 203.2 x 38	Lucas ⊕ ABS
								Luc		84048008	bore ø 20.6 ø 203.2 x 38	Lucas ⊕ ABS
								Luc		84048002	bore ø 17.5 ø 203.2 x 38	Lucas ⊕ ABS

R - S

		kW / hp											
CLIO II (BB0/1/2_, CB0/1/2_) 09/98→06/09													
1.9 D (B/CB0E)	09/98→05/05	583300 47 / 64			**2146306**	[–] 21463 18.2		Bos		**84053700**	bore ø 19 ø 180 x 42	Bosch ⊖ ABS
								Bos		**84060200**	bore ø 17.5 ø 203.2 x 38	Bosch ⊕ ABS
								Bos		**84060201**	bore ø 19 ø 203.2 x 38	⊖ ABS
										94019700	ø 203,3 x 50.5	⊕ ABS →02/02
										94023600	ø 180,2 x 53.5	⊖ ABS
										94027500	ø 203,3 x 50.5	⊕ ABS 02/02→
1.9 D (B/CB0J)	02/00→05/01	583400 48 / 65	Luc		**2146306**	[–] 21463 18.2		Luc		**91048000**	ø 203.2 x 38	Lucas ⊕ ABS
			Luc		**2146304**	[+] 21463 18.2		Bos		**91053700**	ø 180 x 42	Bosch ⊖ ABS
			Luc		**82062800**		⊕ ABS	Bos		**91060200**	ø 203.2 x 38	Bosch ⊕ ABS
				PRO	**92036103**	ø 238 x 12 x 41	⊖ ABS	Bos		**97006400**		Bosch ⊖ ABS
				PRO	**92036203**	ø 238 x 20 x 41	⊕ ABS	Ben		**97010400**		Lucas ⊕ ABS
				PRO	**92100903**	ø 259 x 20.6 x 41	⊕ ABS ⊕ autom. clim. contr.			**97031000**		Bosch ⊕ ABS
					TPM0004			Luc		**83048006**	bore ø 20.6 ø 203.2 x 38	Lucas ⊕ ABS
								Luc		**84048008**	bore ø 20.6 ø 203.2 x 38	Lucas ⊕ ABS
								Luc		**84048002**	bore ø 17.5 ø 203.2 x 38	Lucas ⊕ ABS
								Bos		**84053700**	bore ø 19 ø 180 x 42	Bosch ⊖ ABS
								Bos		**84060200**	bore ø 17.5 ø 203.2 x 38	Bosch ⊕ ABS
										94019700	ø 203,3 x 50.5	⊕ ABS
										94023600	ø 180,2 x 53.5	⊖ ABS
1.9 dTi (B/CB0U)	12/99→05/05	583500 59 / 80	Luc		**2146306**	[–] 21463 18.2		Luc		**91048000**	ø 203.2 x 38	Lucas ⊕ ABS
			Luc		**2146304**	[+] 21463 18.2		Bos		**91053700**	ø 180 x 42	Bosch ⊖ ABS
			Luc		**82062800**		⊕ ABS	Bos		**91060200**	ø 203.2 x 38	Bosch ⊕ ABS
				PRO	**92100903**	ø 259 x 20.6 x 41		Bos		**97006400**		Bosch ⊖ ABS
					TPM0004			Ben		**97010400**		Lucas ⊕ ABS
										97031000		Bosch ⊕ ABS
								Luc		**83048006**	bore ø 20.6 ø 203.2 x 38	Lucas ⊕ ABS
								Luc		**84048008**	bore ø 20.6 ø 203.2 x 38	Lucas ⊕ ABS
								Luc		**84048002**	bore ø 17.5 ø 203.2 x 38	Lucas ⊕ ABS
								Bos		**84053700**	bore ø 19 ø 180 x 42	Bosch ⊖ ABS
								Bos		**84060200**	bore ø 17.5 ø 203.2 x 38	Bosch ⊕ ABS
										94019700	ø 203,3 x 50.5	⊕ ABS →12/02
										94023600	ø 180,2 x 53.5	⊖ ABS
										94027500	ø 203,3 x 50.5	⊕ ABS 12/02→
2.0 16V Sport	01/04→	583600 132 / 179	Luc		**2317203**	[–] 23172 18.3		Ben		**2097401**	[o] 20974 11	
2.0 16V Sport (CB0M)	02/00→	124 / 169	Luc		**82062800**		⊕ ABS	Ben		**82029500**		
				PRO	**92113903**	ø 280 x 24 x 44			ABS	**92154000**	ø 238 x 8 x 74.6	
					TPM0004							
3.0 V6 Sport (CB1A)	11/00→12/02	583700 166 / 226	Lkh		**2034501**	[–] 20345 16.9		Ben		**2150401**	[+] 21504 17	
3.0 V6 Sport (CB1H, CB1U, CB2S)	12/02→	187 / 254			**TPM0004**			Ben		**82029500**		

CLIO II Box (SB0/1/2_) 09/98→10/03

583800													
1.1 (SB0A, SB0F, SB1K, SB2D)	09/98→	43 / 58	Luc		2146306	[–] 21463 18.2		Luc		91048000	ø 203.2 x 38	Lucas ⊕ ABS
			Luc		2146304	[+] 21463 18.2		Bos		91053700	ø 180 x 42	Bosch ⊖ ABS
			Luc		82062800		⊕ ABS	Bos		91060200	ø 203.2 x 38	Bosch ⊕ ABS
				PRO	92036103	ø 238 x 12 x 41		Bos		97006400		
				PRO	92036203	ø 238 x 20 x 41	⊕ ABS	Ben		97010400		Lucas ⊕ ABS
				PRO	92100903	ø 259 x 20.6 x 41				97031000		Bosch ⊕ ABS
					TPM0004			Luc		83048006	bore ø 20.6 ø 203.2 x 38	Lucas ⊕ ABS
								Luc		84048008	bore ø 20.6 ø 203.2 x 38	Lucas ⊕ ABS
								Luc		84048002	bore ø 17.5 ø 203.2 x 38	Lucas ⊕ ABS
								Bos		84053700	bore ø 19 ø 180 x 42	Bosch ⊖ ABS
								Bos		84060200	bore ø 17.5 ø 203.2 x 38	Bosch ⊕ ABS
								Bos		84060201	bore ø 19 ø 203.2 x 38	→10/07 ⊖ ABS
										94019700	ø 203,3 x 50.5	⊕ ABS →12/02
										94023600	ø 180,2 x 53.5	⊖ ABS
										94027500	ø 203,3 x 50.5	12/02→ ⊕ ABS
583900													
1.2 (SB0A, SB0F, SB10)	03/99→10/03	44 / 60	Luc		2146306	[–] 21463 18.2		Luc		91048000	ø 203.2 x 38	Lucas ⊕ ABS
			Luc		2146304	[+] 21463 18.2		Bos		91053700	ø 180 x 42	Bosch ⊖ ABS
			Luc		82062800		⊕ ABS	Bos		91060200	ø 203.2 x 38	Bosch ⊕ ABS
				PRO	92036103	ø 238 x 12 x 41		Bos		97006400		
				PRO	92036203	ø 238 x 20 x 41	⊕ ABS	Ben		97010400		Lucas ⊕ ABS
				PRO	92100903	ø 259 x 20.6 x 41				97031000		Bosch ⊕ ABS
					TPM0004			Luc		83048006	bore ø 20.6 ø 203.2 x 38	Lucas ⊕ ABS
								Luc		84048008	bore ø 20.6 ø 203.2 x 38	Lucas ⊕ ABS
								Luc		84048002	bore ø 17.5 ø 203.2 x 38	Lucas ⊕ ABS
								Bos		84053700	bore ø 19 ø 180 x 42	Bosch ⊖ ABS
								Bos		84060200	bore ø 17.5 ø 203.2 x 38	Bosch ⊕ ABS
								Bos		84060201	bore ø 19 ø 203.2 x 38	Bosch ⊖ ABS
										94019700	ø 203,3 x 50.5	⊕ ABS →12/02
										94023600	ø 180,2 x 53.5	⊖ ABS
										94027500	ø 203,3 x 50.5	12/02→ ⊕ ABS
584000													
1.5 dCi	06/01→10/04	59 / 80	Luc		2146306	[–] 21463 18.2		Luc		91048000	ø 203.2 x 38	Lucas ⊕ ABS
1.5 dCi (SB07)	06/01→	48 / 65	Luc		2146304	[+] 21463 18.2		Bos		91053700	ø 180 x 42	Bosch ⊖ ABS
			Luc		82062800		⊕ ABS	Bos		91060200	ø 203.2 x 38	Bosch ⊕ ABS
				PRO	92100903	ø 259 x 20.6 x 41		Bos		97006400		
					TPM0004			Ben		97010400		Lucas ⊕ ABS
										97031000		Bosch ⊕ ABS
								Luc		83048006	bore ø 20.6 ø 203.2 x 38	Lucas ⊕ ABS
								Luc		84048008	bore ø 20.6 ø 203.2 x 38	Lucas ⊕ ABS
								Luc		84048002	bore ø 17.5 ø 203.2 x 38	Lucas ⊕ ABS
								Bos		84053700	bore ø 19 ø 180 x 42	Bosch ⊖ ABS

R-S

30 kW / hp

CLIO II Box (SB0/1/2_) 09/98→10/03

1.5 dCi 1.5 dCi (SB07)	06/01→10/04 06/01→	584000 59 / 80 48 / 65						Bos		84060200	bore ø 17.5 ø 203.2 x 38	Bosch ⊕ ABS
										94019700	ø 203,3 x 50.5	⊕ ABS →12/02
										94023600	ø 180,2 x 53.5	⊖ ABS
										94027500	ø 203,3 x 50.5	12/02→ ⊕ ABS
1.5 dCi	11/03→	584100 60 / 82	Luc		2146306	[–] 21463 18.2		Luc		91048000	ø 203.2 x 38	Lucas ⊕ ABS
			Luc		2146304	[+] 21463 18.2		Bos		91053700	ø 180 x 42	Bosch ⊖ ABS
			Luc		82062800		⊕ ABS	Bos		91060200	ø 203.2 x 38	Bosch ⊕ ABS
				PRO	92100903	ø 259 x 20.6 x 41		Bos		97006400		
					TPM0004			Ben		97010400		Lucas ⊕ ABS
										97031000		Bosch ⊕ ABS
								Luc		83048006	bore ø 20.6 ø 203.2 x 38	Lucas ⊕ ABS
								Luc		84048008	bore ø 20.6 ø 203.2 x 38	Lucas ⊕ ABS
										94023600	ø 180,2 x 53.5	⊖ ABS
										94027500	ø 203,3 x 50.5	⊕ ABS
1.5 dCi	04/04→	584200 50 / 68	Luc		2146306	[–] 21463 18.2		Luc		91048000	ø 203.2 x 38	Lucas ⊕ ABS
			Luc		2146304	[+] 21463 18.2		Bos		91053700	ø 180 x 42	Bosch ⊖ ABS
			Luc		82062800		⊕ ABS	Bos		91060200	ø 203.2 x 38	Bosch ⊕ ABS
				PRO	92100903	ø 259 x 20.6 x 41		Bos		97006400		
					TPM0004			Ben		97010400		Lucas ⊕ ABS
										97031000		Bosch ⊕ ABS
								Luc		83048006	bore ø 20.6 ø 203.2 x 38	Lucas ⊕ ABS
								Luc		84048008	bore ø 20.6 ø 203.2 x 38	Lucas ⊕ ABS
								Luc		84048002	bore ø 17.5 ø 203.2 x 38	Lucas ⊕ ABS
								Bos		84053700	bore ø 19 ø 180 x 42	Bosch ⊖ ABS
								Bos		84060200	bore ø 17.5 ø 203.2 x 38	Bosch ⊕ ABS
										94023600	ø 180,2 x 53.5	⊖ ABS
										94027500	ø 203,3 x 50.5	⊕ ABS
1.6 (SB0H)	11/03→	584300 79 / 107	Luc		2146306	[–] 21463 18.2		Luc		91048000	ø 203.2 x 38	Lucas ⊕ ABS
			Luc		2146304	[+] 21463 18.2		Bos		91053700	ø 180 x 42	Bosch ⊖ ABS
			Luc		82062800		⊕ ABS	Bos		91060200	ø 203.2 x 38	Bosch ⊕ ABS
				PRO	92036103	ø 238 x 12 x 41		Bos		97006400		
				PRO	92036203	ø 238 x 20 x 41		Ben		97010400		Lucas ⊕ ABS
				PRO	92100903	ø 259 x 20.6 x 41	⊕ ABS ⊕ autom. clim. contr.			97031000		Bosch ⊕ ABS
					TPM0004			Luc		83048006	bore ø 20.6 ø 203.2 x 38	Lucas ⊕ ABS
								Luc		84048008	bore ø 20.6 ø 203.2 x 38	Lucas ⊕ ABS
								Luc		84048002	bore ø 17.5 ø 203.2 x 38	Lucas ⊕ ABS
								Bos		84053700	bore ø 19 ø 180 x 42	Bosch ⊖ ABS
								Bos		84060200	bore ø 17.5 ø 203.2 x 38	Bosch ⊕ ABS
										94023600	ø 180,2 x 53.5	⊖ ABS
										94027500	ø 203,3 x 50.5	⊕ ABS

R - S

kW / hp

CLIO II Box (SB0/1/2_) 09/98→10/03

584400											
1.9 D (SB0E)	09/98→	47 / 64	Luc		2146306	[–] 21463 18.2		Luc		91048000	ø 203.2 x 38	Lucas ⊕ ABS
			Luc		2146304	[+] 21463 18.2		Bos		91053700	ø 180 x 42	Bosch ⊖ ABS
			Luc		82062800		⊕ ABS	Bos		91060200	ø 203.2 x 38	Bosch ⊕ ABS
				PRO	92036103	ø 238 x 12 x 41		Bos		97006400		
				PRO	92036203	ø 238 x 20 x 41		Ben		97010400		Lucas ⊕ ABS
				PRO	92100903	ø 259 x 20.6 x 41	⊕ ABS ⊕ autom. clim. contr.			97031000		Bosch ⊕ ABS
					TPM0004			Luc		83048006	bore ø 20.6 ø 203.2 x 38	Lucas ⊕ ABS
								Luc		84048008	bore ø 20.6 ø 203.2 x 38	Lucas ⊕ ABS
								Luc		84048002	bore ø 17.5 ø 203.2 x 38	Lucas ⊕ ABS
								Bos		84053700	bore ø 19 ø 180 x 42	Bosch ⊖ ABS
								Bos		84060200	bore ø 17.5 ø 203.2 x 38	Bosch ⊕ ABS
								Bos		84060201	bore ø 19 ø 203.2 x 38	Bosch ⊖ ABS
										94019700	ø 203,3 x 50.5	⊕ ABS →12/02
										94023600	ø 180,2 x 53.5	⊖ ABS
										94027500	ø 203,3 x 50.5	12/02→ ⊕ ABS
584500											
1.9 D (SB0J)	02/00→05/01	48 / 65	Luc		2146306	[–] 21463 18.2		Luc		91048000	ø 203.2 x 38	Lucas ⊕ ABS
			Luc		2146304	[+] 21463 18.2		Bos		91053700	ø 180 x 42	Bosch ⊖ ABS
			Luc		82062800		⊕ ABS	Bos		91060200	ø 203.2 x 38	Bosch ⊕ ABS
				PRO	92036103	ø 238 x 12 x 41		Bos		97006400		
				PRO	92036203	ø 238 x 20 x 41		Ben		97010400		Lucas ⊕ ABS
				PRO	92100903	ø 259 x 20.6 x 41	⊕ ABS ⊕ autom. clim. contr.			97031000		Bosch ⊕ ABS
					TPM0004			Luc		83048006	bore ø 20.6 ø 203.2 x 38	Lucas ⊕ ABS
								Luc		84048008	bore ø 20.6 ø 203.2 x 38	Lucas ⊕ ABS
								Luc		84048002	bore ø 17.5 ø 203.2 x 38	Lucas ⊕ ABS
								Bos		84053700	bore ø 19 ø 180 x 42	Bosch ⊖ ABS
								Bos		84060200	bore ø 17.5 ø 203.2 x 38	Bosch ⊕ ABS
								Bos		84060201	bore ø 19 ø 203.2 x 38	Bosch ⊖ ABS
										94019700	ø 203,3 x 50.5	⊕ ABS
										94023600	ø 180,2 x 53.5	⊖ ABS
584600											
1.9 D (SB0R)	03/99→01/00	40 / 54	Luc		2146306	[–] 21463 18.2		Luc		91048000	ø 203.2 x 38	Lucas ⊕ ABS
			Luc		2146304	[+] 21463 18.2		Bos		91053700	ø 180 x 42	Bosch ⊖ ABS
			Luc		82062800		⊕ ABS	Bos		91060200	ø 203.2 x 38	Bosch ⊕ ABS
				PRO	92036103	ø 238 x 12 x 41	⊕ solid disc	Bos		97006400		
				PRO	92036203	ø 238 x 20 x 41	⊕ vented disc	Ben		97010400		Lucas ⊕ ABS
				PRO	92100903	ø 259 x 20.6 x 41	⊕ ABS ⊕ autom. clim. contr.			97031000		Bosch ⊕ ABS
					TPM0004			Luc		83048006	bore ø 20.6 ø 203.2 x 38	Lucas ⊕ ABS
								Luc		84048008	bore ø 20.6 ø 203.2 x 38	Lucas ⊕ ABS
								Luc		84048002	bore ø 17.5 ø 203.2 x 38	Lucas ⊕ ABS
								Bos		84053700	bore ø 19 ø 180 x 42	Bosch ⊖ ABS
								Bos		84060200	bore ø 17.5 ø 203.2 x 38	Bosch ⊕ ABS

R - S

		kW / hp											
CLIO II Box (SB0/1/2_) 09/98→10/03													
		584600											
1.9 D (SB0R)	03/99→01/00	40 / 54								94019700	ø 203,3 x 50.5	⊕ ABS	
										94023600	ø 180,2 x 53.5	⊖ ABS	
		584700	Luc		2146306	[–] 21463 18.2		Luc		91048000	ø 203.2 x 38	Lucas ⊕ ABS	
1.9 DTi (SB0U)	02/00→05/01	59 / 80	Luc		2146304	[+] 21463 18.2		Bos		91053700	ø 180 x 42	Bosch ⊖ ABS	
			Luc		82062800		⊕ ABS	Bos		91060200	ø 203.2 x 38	Bosch ⊕ ABS	
				PRO	92036103	ø 238 x 12 x 41		Bos		97006400			
				PRO	92036203	ø 238 x 20 x 41		Ben		97010400		Lucas ⊕ ABS	
				PRO	92100903	ø 259 x 20.6 x 41	⊕ ABS ⊕ autom. clim. contr.			97031000		Bosch ⊕ ABS	
					TPM0004			Luc		83048006	bore ø 20.6 ø 203.2 x 38	Lucas ⊕ ABS	
								Luc		84048008	bore ø 20.6 ø 203.2 x 38	Lucas ⊕ ABS	
										94019700	ø 203,3 x 50.5	⊕ ABS	
										94023600	ø 180,2 x 53.5	⊖ ABS	
CLIO II Kasten (SB0/1/2_) 09/98→10/03 → CLIO II Box (SB0/1/2_), Page 947													
CLIO III (BR0/1, CR0/1) 01/05→													
		584800	Luc		2397301	[–] 23973 17.3		Luc		2355406	[–] 23554 16.2	⊕ ESP	
1.2	05/05→06/09	43 / 58											
1.2 (BR01, BR03, BR0E, CR0E)	10/05→	57 / 78	Luc		82072200			Luc		82503100		⊕ ESP	
1.2 16V	06/05→	58 / 78											
1.2 16V	06/06→08/10	43 / 58	Luc		82063300			Luc		82063300		⊕ ESP	
1.2 16V	09/10→	76 / 103											
1.2 16V (BR02, BR0J, BR11, CR02, CR0J, CR11)	06/05→	55 / 75		PRO	92119203	ø 260 x 22 x 44		Lkh		91062600	ø 203.2 x 36.5	⊖ ESP	
1.2 16V (BR0P, CR0P)	05/07→	74 / 101											
1.2 16V (BR0R, BR1D, BR1L, CR0R)	06/05→	48 / 65			TPM0004					97031100		⊖ ESP	
1.2 16V Hi-Flex (BR1U, CR1U)	07/08→	55 / 75						Lkh		84062600	bore ø 19 ø 203.2 x 36.5	⊖ ESP	
1.4 16V	06/05→	72 / 98											
1.5 dCi	05/05→	48 / 65								92154400	ø 240 x 8 x 80.8	⊕ ESP	
1.5 dCi	06/05→	47 / 64											
1.5 dCi	11/07→	60 / 82											
1.5 dCi	08/10→	55 / 75								94032300	ø 203 x 50.5	⊖ ESP	
1.5 dCi	08/10→	65 / 88											
1.5 dCi (BR0H, CR0H)	06/05→	78 / 106											
1.5 dCi (BR17, CR17)	06/05→	63 / 86											
1.5 dCi (BR1C, CR1C)	06/05→	76 / 103											
1.5 dCi (C/BR1G)	06/05→	50 / 68											
1.6	01/05→02/10	86 / 117											
1.6 16V (BR05, BR0B, BR0Y, BR15, BR1J, BR1M, BR1Y, CR0B...)	06/05→	82 / 112											
1.6 16V (BR09, BR0T, CR09, CR0T)	06/05→	65 / 88											
1.6 16V GT (BR10, CR10)	06/09→	94 / 128											
1.6 Hi-Flex	05/05→02/10	86 / 117											
		584900	Luc		2397301	[–] 23973 17.3		Luc		2355406	[–] 23554 16.2	⊕ ESP	
1.2 Ethanol	07/08→	55 / 75											
			Luc		82072200			Luc		82503100		⊕ ESP	
				PRO	92119203	ø 260 x 22 x 44		Lkh		91062600	ø 203.2 x 36.5	⊖ ESP	
					TPM0004					97031100		⊖ ESP	
								Lkh		84062600	bore ø 19 ø 203.2 x 36.5	⊖ ESP	
										92154400	ø 240 x 8 x 80.8	⊕ ESP	
										94032300	ø 203 x 50.5	⊖ ESP	
		585000	Ate		2453501	[–] 24535 18.3		Luc		2355406	[–] 23554 16.2	⊕ ESP	
2.0 16V (BR0C, BR0K, CR0C, CR0K)	09/06→	102 / 139											
			Luc		82072200			Luc		82503100		⊕ ESP	
			Luc		82063300			Luc		82063300		⊕ ESP	
				PRO	92119203	ø 260 x 22 x 44		Lkh		91062600	ø 203.2 x 36.5	⊖ ESP	
					TPM0004					97031100		⊖ ESP	
								Lkh		84062600	bore ø 19 ø 203.2 x 36.5	⊖ ESP	
										92154400	ø 240 x 8 x 80.8	⊕ ESP	

R - S

		kW / hp									
CLIO III (BR0/1, CR0/1) 01/05→											
		585000									
2.0 16V (BROC, BROK, CROC, CROK)	09/06→	102 / 139							94032300	ø 203 x 50.5	⊖ ESP
		585100	Bre	2416201	[–] 24162 15.3		Luc	2355406	[–] 23554 16.2	
2.0 16V Sport	02/06→	145 / 197		92167700	ø 312 x 28 x 63		Luc	82503100		
2.0 16V Sport	09/08→	148 / 200		PRO 92119203	ø 260 x 22 x 44		Luc	82063300		
				TPM0004				92154400	ø 240 x 8 x 80.8	
CLIO III Box (SB_, SR_) 06/05→07/10											
		585200	Luc	2397301	[–] 23973 17.3		Luc	2355406	[–] 23554 16.2	⊕ ESP
1.5 dCi	06/05→07/10	63 / 86	Luc	82072200			Luc	82503100		⊕ ESP
1.5 dCi	10/05→10/07	78 / 106	Luc	82063300			Luc	82063300		⊕ ESP
1.5 dCi	10/05→07/10	50 / 68		PRO 92119203	ø 260 x 22 x 44		Lkh	91062600	ø 203.2 x 36.5	⊖ ESP
				TPM0004				97031100		⊖ ESP
							Lkh	84062600	bore ø 19 ø 203.2 x 36.5	⊖ ESP
								92154400	ø 240 x 8 x 80.8	⊕ ESP
								94032300	ø 203 x 50.5	⊖ ESP
CLIO III Kasten (SB_, SR_) 06/05→07/10 → CLIO III Box (SB_, SR_), Page 951											
CLIO IV 11/12→											
		585300	Luc	2397301	[–] 23973 17.3	17" -brake					
0.9 TCe 90	11/12→	66 / 90									
1.2 16V	11/12→	54 / 73	Ate	2570201	[–] 25702 18	15" -brake 16" -brake					
1.5 dCi 75	11/12→	55 / 75									
1.5 dCi 90	11/12→	66 / 90		PRO 92255203	ø 258 x 22 x 44						
		585400	Ate	2471001	[–] 24710 18		Luc	2355406	[–] 23554 16.2	
1.6 RS	03/13→	147 / 200	Ate	82076800				92195900	ø 260 x 8 x 88.1	
				PRO 92195403	ø 320 x 28 x 44					
CLIO Grandtour (KR0/1_) 02/08→											
		585500	Luc	2397301	[–] 23973 17.3		Luc	2355406	[–] 23554 16.2	⊕ ESP
1.2 16V	09/10→	76 / 103	Luc	82072200			Luc	82503100		⊕ ESP
1.2 16V (KR02, KR0J)	02/08→	55 / 75	Luc	82063300			Luc	82063300		⊕ ESP
1.2 16V (KR0E)	02/08→	58 / 78		PRO 92119203	ø 260 x 22 x 44		Lkh	91062600	ø 203.2 x 36.5	⊖ ESP
1.2 16V (KR0P)	02/08→	74 / 101		TPM0004				97031100		⊖ ESP
1.2 16V Hi-Flex (KR0S)	07/08→	55 / 75					Lkh	84062600	bore ø 19 ø 203.2 x 36.5	⊖ ESP
1.4 16V	02/10→	72 / 98						92154400	ø 240 x 8 x 80.8	⊕ ESP
1.5 dCi	02/10→	48 / 65						94032300	ø 203 x 50.5	⊖ ESP
1.5 dCi	08/10→	55 / 75								
1.5 dCi	08/10→	65 / 88								
1.5 dCi (KR0F)	02/08→	63 / 86								
1.5 dCi (KR0G)	02/08→	50 / 68								
1.5 dCi (KR0H)	02/08→	78 / 106								
1.5 dCi (KR1C, KR1N)	02/08→	76 / 103								
1.6 16V (KR0B)	02/08→	82 / 112								
1.6 16V (KR10)	11/08→	94 / 128								
		585600	Luc	2397301	[–] 23973 17.3		Luc	2355406	[–] 23554 16.2	⊕ ESP ⊕ rear disc brake
1.6 16V	02/08→	80 / 109	Luc	82054900			Lkh	91062600	ø 203.2 x 36.5	⊖ ESP ⊕ rear drum brake
				PRO 92119203	ø 260 x 22 x 44		Lkh	84062600	bore ø 19 ø 203.2 x 36.5	⊖ ESP ⊕ rear drum brake
				TPM0004				92154400	ø 240 x 8 x 80.8	⊕ rear disc brake
CLIO Grandtour IV 01/13→											
		585700	Luc	2397301	[–] 23973 17.3	17" -brake					
0.9 TCe 90	01/13→	66 / 90									
1.2 16V	01/13→	54 / 73	Ate	2570201	[–] 25702 18	15" -brake 16" -brake					
1.5 dCi 75	01/13→	55 / 75									
1.5 dCi 90	01/13→	66 / 90		PRO 92255203	ø 258 x 22 x 44						
CLIO Mk II (BB0/1/2_, CB0/1/2_) 09/98→06/09 → CLIO II (BB0/1/2_, CB0/1/2_), Page 939											
DUSTER 06/09→											
		585800	Luc	2397301	[–] 23973 17.3	⊖ ESP		91069300	ø 228.6 x 42	
1.5 dCi	06/09→	66 / 90								

R - S

		kW / hp												
DUSTER 06/09→														
1.5 dCi	02/12→	63 / 85	Ate		2491401	[–] 24914 18	⊕ ESP		Bos		97010100		
1.5 dCi	02/12→	81 / 110											
1.6 16V	01/11→	81 / 110											
1.6 16V (HSAT)	02/12→	75 / 102	Luc		82054900		⊖ ESP						
1.6 Flex	10/11→	85 / 116											
2.0	01/11→	101 / 137	Ate		82032000		⊕ ESP						
2.0	10/11→	102 / 138											
2.0	02/12→	98 / 133			TPM0004								
2.0 4x4	02/12→	99 / 135											
2.0 All-wheel Drive	01/11→	101 / 137											
2.0 Hi-Flex	01/11→	104 / 141											
2.0 Hi-Flex 4x4	01/11→	104 / 141											
		585900	Luc		2397301	[–] 23973 17.3	⊖ ESP				91069300	ø 228.6 x 42	
1.6 16V	02/12→	76 / 104											
			Luc		82054900		⊖ ESP		Bos		97010100		
					TPM0004								
		586000	Ate		2491401	[–] 24914 18					TPM0004		
2.0 4x4	10/11→	102 / 138											
2.0 Flex 4x4	10/11→	105 / 142	Ate		82032000								
					TPM0004								
		586100	Luc		2397301	[–] 23973 17.3					91069300	ø 228.6 x 42	
2.0 Flex	10/11→	105 / 142											
			Luc		82054900				Bos		97010100		
									Bos		84069300	bore ø 22 ø 228.6 x 42	
ESPACE III (JE0_) 11/96→10/02														
		586200	Luc		2188801	[+] 21888 18.4			Luc		91053900	ø 228.6 x 41.5	
1.9 dTi (JE0M)	02/99→10/02	72 / 98											
2.2 12V TD (JE0E, JE0H, JE0P)	11/96→10/00	83 / 113		PRO	92113803	ø 280 x 24 x 44			Luc		84053901	bore ø 22.2 ø 228.6 x 41.5	
											94028300	ø 228,6 x 52.5	
		586300	Luc		2188801	[+] 21888 18.4			Luc		2355401	[–] 23554 15.2	
2.0	09/01→10/02	102 / 139											
				PRO	92113803	ø 280 x 24 x 44			Luc	epad	2355482	[–] 23554 15.2	
									Luc		82503100		
									Luc		82063300		
											92096300	ø 265 x 10.5 x 54.3	
		586400	Luc		2188801	[+] 21888 18.4			Luc		91053900	ø 228.6 x 41.5	
2.0 (JE0A)	11/96→10/00	84 / 114											
2.2 D	11/97→01/00	84 / 114		PRO	92113803	ø 280 x 24 x 44			Luc		97012000		
									Luc		84053901	bore ø 22.2 ø 228.6 x 41.5	
											94028300	ø 228,6 x 52.5	
		586500	Luc		2188801	[+] 21888 18.4			Bre		2041001	[–] 20410 15	→07/00
2.0 16V (JE0N, JE0L, JE02)	10/98→10/02	103 / 140											
				PRO	92113803	ø 280 x 24 x 44			Luc		2355406	[–] 23554 16.2	07/00→
									Bre		82033300		→07/00
									Luc		82503100		07/00→
									Luc		82063300		07/00→
											92096300	ø 265 x 10.5 x 54.3	
		586600	Luc		2497101	[–] 24971 18.4	06/01→		Luc		2355406	[–] 23554 16.2	
2.2 dCi (JE0K)	10/00→10/02	95 / 130											
2.2 dCi (JE0S)	07/00→10/02	85 / 115	Luc		2309902	[+] 23099 18.4	→06/01		Luc		82503100		
			Luc		82063500				Luc		82063300		
					92112300	ø 305 x 28 x 44					92096300	ø 265 x 10.5 x 54.3	
					TPM0004								
		586700	Luc		2497101	[–] 24971 18.4	06/01→		Bre		2041001	[–] 20410 15	→07/00
3.0 V6 24V (JE0G, JE0R)	10/98→10/02	140 / 190											
			Luc		2309903	[+] 23099 18.4	→07/00		Luc		2355406	[–] 23554 16.2	07/00→

→

		kW / hp											
ESPACE III (JE0_) 11/96→10/02													
		586700	Luc		2309902	[+] 23099 18.4	→06/01	Bre		82033300		→07/00
3.0 V6 24V (JE0G, JE0R)	10/98→10/02	140 / 190	Luc		82063500			Luc		82503100		07/00→
					92112200	ø 288 x 28 x 44	→07/00	Luc		82063300		07/00→
					92112300	ø 305 x 28 x 44	07/00→			92096300	ø 265 x 10.5 x 54.3	
					TPM0004							
ESPACE IV (JK0/1_) 11/02→													
		586800	Ate		2324802	[–] 23248 18.3		Ate		2348202	[–] 23482 16.8	
1.9 dCi (JK0U, JK0G)	11/02→	88 / 120										
1.9 dCi (JK0U)	04/03→02/05	85 / 116										
2.0 (JK09)	11/02→	100 / 136	Ate		82032100			Ate		82062900		
2.0 (JK0K)	11/02→02/05	98 / 133										
2.0 (JK0N, JK1D)	04/05→	125 / 170	Ate		82062900			Ate		82503500		
2.0 Turbo (JK0B, JK0N)	11/02→	120 / 163										
				PRO	92174003	ø 308 x 28 x 47			ABS	92159800	ø 300 x 11 x 86.6	
		586900	Ate		2324802	[–] 23248 18.3		Ate		2348202	[–] 23482 16.8	
2.0 dCi (JK01, JK02, JK1J, JK1K)	01/06→	110 / 150										
2.0 dCi (JK02, JK03)	01/06→	96 / 131	Ate		82032100			Ate		82062900		
2.0 dCi (JK03, JK04)	01/06→	127 / 173										
2.2 dCi (JK07)	02/06→	102 / 139	Ate		82062900			Ate		82503500		
2.2 dCi (JK0H)	11/02→	110 / 150										
3.0 dCi (JK0E, JK0Y)	01/06→	133 / 181										
3.0 dCi (JK0J, JK0V)	11/02→	130 / 177										
3.5 V6 (JK00, JK0F, JK0P, JK0S, JK0W)	11/02→	177 / 241		PRO	92119403	ø 324 x 28 x 47			ABS	92159800	ø 300 x 11 x 86.6	
		587000	Ate		2324802	[–] 23248 18.3		Ate		2348202	[–] 23482 16.8	
3.0 dCi	09/05→	120 / 163	Ate		82032100			Ate		82503500		
				PRO	92119403	ø 324 x 28 x 47			ABS	92159800	ø 300 x 11 x 86.6	
ESPACE Mk III (JE0_) 11/96→10/02 → ESPACE III (JE0_), Page 952													
ESPACE Mk IV (JK0/1_) 11/02→ → ESPACE IV (JK0/1_), Page 953													
EURO CLIO III (BR0/1, CR0/1) 01/05→ → CLIO III (BR0/1, CR0/1), Page 950													
FLUENCE (L30_) 02/10→													
		587100	Ate		2491401	[–] 24914 18		Luc		2355406	[–] 23554 16.2	⊖ elect. handbr.
1.5 dCi (L30A)	02/10→	63 / 86										
1.5 dCi (L30B)	02/10→	78 / 106										
1.5 dCi (L30D, L30L)	02/10→	81 / 110	Ate		82032000			Bos		2482001	[–] 24820 15.7	⊕ elect. handbr.
1.5 dCi (L30S)	02/10→	66 / 90										
1.6 16V	02/10→	82 / 111		PRO	92195503	ø 280 x 24 x 44				82076200		⊕ elect. handbr.
1.6 16V (L301, L30F, L30P, L30R)	02/10→	81 / 110										
1.6 Flex	02/11→	85 / 115			TPM0004				ABS	92196000	ø 260 x 8 x 89	
2.0	09/11→	104 / 141										
2.0	05/14→	105 / 143										
2.0 16V	05/11→	101 / 137										
2.0 16V (L30C, L30G, L30T, L30V)	02/10→	103 / 140										
2.0 Flex	02/11→	105 / 143										
Z.E.	02/12→	70 / 95										
		587200	Ate		2491401	[–] 24914 18		Luc		2355406	[–] 23554 16.2	⊖ elect. handbr.
2.0	02/11→	132 / 180	Ate		82032000			Bos		2482001	[–] 24820 15.7	⊕ elect. handbr.
				PRO	92195503	ø 280 x 24 x 44	⊕ elect. handbr.	Bos		2511201	[+] 25112 18.1	
					TPM0004					82076200		⊕ elect. handbr.
GRAND SCÉNIC II (JM0/1_) 04/04→01/09													
		587300	Bos		2393001	[–] 23930 18.1		Luc		2355406	[–] 23554 16.2	
1.5 dCi	04/04→	60 / 82	Bos		82054200				ABS	92154500	ø 270 x 10 x 82	
				PRO	92113903	ø 280 x 24 x 44						
					TPM0004							
		587400	Ate		2453601	[–] 24536 18.3		Luc		2355406	[–] 23554 16.2	
1.5 dCi	06/06→11/08	76 / 103	Ate		82032100				ABS	92223200	ø 274 x 11 x 84.1	
				PRO	92149503	ø 300 x 24 x 43.7						
					TPM0004							
		587500	Bos		2393001	[–] 23930 18.1	→10/05	Luc		2355406	[–] 23554 16.2	
1.5 dCi (JM02, JM13)	04/04→	74 / 101										

R - S

		kW / hp											
GRAND SCÉNIC II (JM0/1_) 04/04→01/09													
1.5 dCi (JM1E)	05/05→	78 / 106	Ate		**2453601**	[–] 24536 18.3	10/05→			**92223200**	ø 274 x 11 x 84.1	
1.6	04/04→	83 / 113	Bos		**82054200**		→10/05					
1.9 dCi (JM0G, JM12, JM1G, JM2C)	04/04→	88 / 120	Ate		**82032100**		10/05→					
1.9 dCi (JM14)	05/05→	96 / 131	Ate		**82062900**		10/05→					
2.0	04/04→	99 / 135		PRO	**92149503**	ø 300 x 24 x 43.7						
2.0	04/04→	120 / 163										
		587600	Ate		**2453601**	[–] 24536 18.3		Luc		**2355406**	[–] 23554 16.2	
1.6	06/06→	77 / 105	Ate		**82032100**					**92223200**	ø 274 x 11 x 84.1	
1.6	06/06→11/08	82 / 112	Ate		**82062900**							
1.6 Flex	06/06→11/08	82 / 112		PRO	**92149503**	ø 300 x 24 x 43.7						
1.9 dCi (JM15)	05/05→	81 / 110										
		587700	Bos		**2393001**	[–] 23930 18.1	→2005-10	Luc		**2355406**	[–] 23554 16.2	
1.9 dCi	05/05→01/09	85 / 116	Ate		**2453601**	[–] 24536 18.3	2005-10→			**92223200**	ø 274 x 11 x 84.1	
			Ate		**82032100**		2005-10→					
				PRO	**92149503**	ø 300 x 24 x 43.7						
					TPM0004							
		587800	Bos		**2393001**	[–] 23930 18.1	→10/05	Luc		**2355406**	[–] 23554 16.2	
2.0 dCi (JM1K)	09/05→	110 / 150	Ate		**2453601**	[–] 24536 18.3	10/05→			**92223200**	ø 274 x 11 x 84.1	
			Bos		**82054200**		→10/05					
			Ate		**82032100**		10/05→					
			Ate		**82062900**		10/05→					
GRAND SCÉNIC III (JZ0/1_) 02/09→												
		587900	Ate		**2471001**	[–] 24710 18		Luc		**2355406**	[–] 23554 16.2	⊖ elect. handbr.
1.2 TCe	04/12→	85 / 116	Ate		**82062900**					**82076200**		⊕ elect. handbr.
			Ate		**82076800**					**92195900**	ø 260 x 8 x 88.1	⊖ elect. handbr.
				PRO	**92195603**	ø 296 x 26 x 43.9			PRO	**92232603**	ø 274 x 11 x 86.2	⊕ elect. handbr.
					TPM0004							
		588000	Ate		**2471001**	[–] 24710 18		Luc		**2355406**	[–] 23554 16.2	⊖ elect. handbr.
1.2 TCe (JZ16)	01/13→	97 / 132	Ate		**82076800**					**82076200**		⊕ elect. handbr.
				PRO	**92195603**	ø 296 x 26 x 43.9				**92195900**	ø 260 x 8 x 88.1	⊖ elect. handbr.
					TPM0004				PRO	**92232603**	ø 274 x 11 x 86.2	⊕ elect. handbr.
		588100	Ate		**2471001**	[–] 24710 18		Luc		**2355406**	[–] 23554 16.2	⊖ elect. handbr.
1.4 16V (JZ0F)	02/09→	96 / 131										
1.5 dCi	02/09→	78 / 106	Ate		**82062900**					**82076200**		⊕ elect. handbr.
1.5 dCi	04/09→	63 / 86										
1.5 dCi	04/09→	81 / 110										
1.5 dCi	11/10→	70 / 95	Ate		**82076800**			Luc		**82503100**		⊖ elect. handbr.
1.6 16V (JZ0U)	02/09→	81 / 109										
1.6 dCi (JZ00, JZ12)	04/11→	96 / 130		PRO	**92195603**	ø 296 x 26 x 43.9			PRO	**92232603**	ø 274 x 11 x 86.2	
1.9 dCi	02/09→	96 / 131										
2.0 16V (JZ0G)	02/09→	103 / 140			**TPM0004**							
		588200	Ate		**2471001**	[–] 24710 18	⊕ rim size 16" rim size 17"	Luc		**2355406**	[–] 23554 16.2	⊖ elect. handbr.
1.6 16V Bifuel	02/09→	81 / 110	Ate		**2491401**	[–] 24914 18	⊕ rim size 15"			**82076200**		⊕ elect. handbr.
			Ate		**82032000**		⊕ rim size 15"	Luc		**82503100**		⊖ elect. handbr.
			Ate		**82062900**				PRO	**92232603**	ø 274 x 11 x 86.2	
			Ate		**82076800**		⊕ rim size 16" rim size 17"					
				PRO	**92195503**	ø 280 x 24 x 44	⊕ rim size 15"					

		kW / hp										
GRAND SCÉNIC III (JZ0/1_) 02/09→												
		588200										
1.6 16V Bifuel	02/09→	81 / 110		PRO	92195603	ø 296 x 26 x 43.9	⊕ rim size 16" rim size 17"					
					TPM0004							
		588300	Ate		2482601	[–] 24826 18		Luc		2355406	[–] 23554 16.2	⊖ elect. handbr.
2.0 dCi (JZ0L)	04/09→	118 / 160										
2.0 dCi (JZ0Y)	02/09→	110 / 150	Ate		82062900			Bos		2482001	[–] 24820 15.7	⊕ elect. handbr.
				PRO	92195403	ø 320 x 28 x 44				82076200		⊕ elect. handbr.
					TPM0004			Luc		82503100		⊖ elect. handbr.
									ABS	92254100	ø 290 x 11 x 90.2	
GRAN TOUR III Combi (KZ0/1) 11/08→ → MEGANE III Grandtour (KZ0/1), Page 978												
GRAN TOUR III Grandtour (KZ0/1) 11/08→ → MEGANE III Grandtour (KZ0/1), Page 978												
KANGOO / GRAND KANGOO (KW0/1_) 02/08→												
		588400	Luc		2397301	[–] 23973 17.3	14" -brake	TRW		2469201	[–] 24692 15	⊕ rear disc brake
1.5 dCi	02/08→	78 / 106										
1.5 dCi	01/09→	48 / 65	Bos		2469301	[–] 24693 18.7	15",16" -brake	Luc		82076100		⊕ rear disc brake
1.5 dCi	11/12→	55 / 75										
1.5 dCi	11/12→	66 / 90	Bos		2469306	[+] 24693 17.6	15",16" -brake			91069300	ø 228.6 x 42	⊕ rear drum brake
1.5 dCi (KW0A)	02/08→	50 / 68										
1.5 dCi (KW0B)	02/08→	63 / 86										
1.5 dCi (KW0C, KW0F)	02/08→	76 / 103	Luc		82054900		14" -brake	Bos		97010100		⊕ rear drum brake
1.5 dCi 110	09/10→	80 / 110										
1.6	01/10→	70 / 95										
1.6 (KW0O, KW0Y)	02/08→	64 / 87			92202400	ø 280 x 24 x 44	15'',16'' -brake	Bos		84069300	bore ø 22 ø 228.6 x 42	⊕ rear disc brake
1.6 16V (KW0D)	02/08→	78 / 106										
1.6 16V Hi-Flex	02/08→	78 / 106		PRO	92241503	ø 258 x 22 x 43.9	14" -brake			97031900		⊕ rear disc brake
					TPM0004							
KANGOO (KC0/1_) 08/97→												
		588500	Bos		2198009	[+] 21980 18	⊕ post veh.	Ben		91052700	ø 228.6 x 42	⊕ incr. payload
1.2 (KC0A, KC0K, KC0F, KC01)	08/97→	43 / 58										
1.2 16V (KC03, KC05, KC06, KC0T, KC0W)	06/01→	55 / 75	Bos		2198003	[+] 21980 18	⊖ post veh.	Ben		91052800	ø 203.2 x 37	⊖ incr. payload
1.4 (KC0C, KC0H, KC0B, KC0M)	08/97→	55 / 75	Bos		82054200			Ben		97010000		⊕ incr. payload
1.5 dCi	07/03→	42 / 57										
1.5 dCi	04/05→06/10	45 / 61	Bos		82063700			Ben		97014300		⊖ incr. payload
1.5 dCi	06/05→	50 / 68										
1.5 dCi	06/05→	62 / 84		PRO	92036203	ø 238 x 20 x 41				84052701	bore ø 22.2 ø 228.6 x 42	⊕ incr. payload
1.5 dCi (KC07)	12/01→	48 / 65										
1.5 dCi (KC08, KC09)	07/02→	60 / 82		PRO	92100903	ø 259 x 20.6 x 41				84052800	bore ø 22.2 ø 203.2 x 37	⊖ incr. payload
1.6	09/99→06/01	66 / 90										
1.6 16V	06/01→	70 / 95										
1.6 16V bivalent	06/05→	60 / 82			TPM0004					94013700	ø 228,6 x 52.5	⊕ incr. payload
1.6 Flex	01/07→	70 / 95										
1.9 dTi (KC0U)	02/00→	59 / 80										
1.9 RXED	09/99→06/01	48 / 65								94027100	ø 203,3 x 50.5	⊖ incr. payload
D 55 1.9 (KC0D)	08/97→	40 / 54										
Elect'road RE	01/02→12/04	22 / 30										
		588600	Bos		2393001	[–] 23930 18.1		Bos		2355702	[–] 23557 16.9	
1.6 16V 4x4 (KC0P, KC0S, KC0L)	10/01→	70 / 95										
1.9 dCi 4x4	10/03→	62 / 84	Bos		82054200			Bos		82054300		
1.9 dCi 4x4 (KC0V)	10/01→	59 / 80										
				PRO	92113903	ø 280 x 24 x 44			PRO	92181203	ø 280 x 12 x 45.7	
					TPM0004							
		588700	Bos		2198009	[+] 21980 18	⊕ post veh.	Ben		91052700	ø 228.6 x 42	⊕ incr. payload
D 65 1.9 (KC0E, KC02, KC0J, KC0N)	08/97→	47 / 64	Bos		2198003	[+] 21980 18	⊖ post veh.	Ben		91052800	ø 203.2 x 37	⊖ incr. payload
			Bos		82054200			Ben		97010000		⊕ incr. payload
			Bos		82063700			Ben		97014300		⊖ incr. payload
				PRO	92100903	ø 259 x 20.6 x 41				84052701	bore ø 22.2 ø 228.6 x 42	⊕ incr. payload
					TPM0004					84052800	bore ø 22.2 ø 203.2 x 37	⊖ incr. payload
										94013700	ø 228,6 x 52.5	⊕ incr. payload
										94027100	ø 203,3 x 50.5	⊖ incr. payload
KANGOO BE BOP (KW0/1_) 02/09→												
		588800	Bos		2469301	[–] 24693 18.7		TRW		2469201	[–] 24692 15	
1.5 dCi	06/09→	80 / 110										
1.5 dCi (KW0F)	02/09→	76 / 103	Bos		2469306	[+] 24693 17.6		Luc		82076100		
1.5 dCi (KW0G)	06/09→	66 / 90										
1.6 (KW0D)	02/09→	78 / 106										

		kW / hp									
KANGOO BE BOP (KW0/1_) 02/09→											
588800			Bos		**82074900**		vented disc	Luc		**82063300**	
1.5 dCi	06/09→	80 / 110		PRO	**92241503**	ø 258 x 22 x 43.9				**91069300**	ø 228.6 x 42
1.5 dCi (KW0F)	02/09→	76 / 103			**TPM0004**			Bos		**84069300**	bore ø 22 ø 228.6 x 42
1.5 dCi (KW0G)	06/09→	66 / 90									
1.6 (KW0D)	02/09→	78 / 106									
588900			Bos		**2469301**	[–] 24693 18.7		TRW		**2469201**	[–] 24692 15
1.5 dCi 75	09/10→	55 / 75	Bos		**2469306**	[+] 24693 17.6		Luc		**82076100**	
			Bos		**82074900**		vented disc	Luc		**82063300**	
				PRO	**92241503**	ø 258 x 22 x 43.9				**91069300**	ø 228.6 x 42
					TPM0004						
KANGOO Express (FC0/1_) 08/97→07/01											
589000			Bos		**2198009**	[+] 21980 18	⊕ post veh.	Ben		**91052700**	ø 228.6 x 42 ⊕ incr. payload
1.0	07/03→	40 / 54	Bos		**2198003**	[+] 21980 18	⊖ post veh.	Ben		**91052800**	ø 203.2 x 37 ⊖ incr. payload
1.2 (FC01, FC0A, FC0F)	08/97→	43 / 58	Bos		**82054200**			Ben		**97010000**	⊕ incr. payload
1.2 (FC1A)	07/98→07/01	44 / 60	Bos		**82063700**			Ben		**97014300**	⊖ incr. payload
1.2 16V (FC05)	10/01→	55 / 75		PRO	**92036203**	ø 238 x 20 x 41				**84052701**	bore ø 22.2 ø 228.6 x 42 ⊕ incr. payload
1.4 (FC0C, FC0B, FC0H, FC0M)	08/97→	55 / 75		PRO	**92100903**	ø 259 x 20.6 x 41				**84052800**	bore ø 22.2 ø 203.2 x 37 ⊖ incr. payload
1.5 dCi	10/05→	45 / 61			**TPM0004**					**94013700**	ø 228,6 x 52.5 ⊕ incr. payload
1.5 dCi (FC07, FC1R)	12/01→	48 / 65								**94027100**	ø 203,3 x 50.5 ⊖ incr. payload
1.5 dCi (FC08, FC09)	04/03→	60 / 82									
1.5 dCi (FC1E)	06/05→	50 / 68									
1.5 dCi (FC1G)	06/05→	62 / 84									
1.5 dCi (FC1R)	12/02→	42 / 57									
1.6 16V	10/01→	70 / 95									
1.6 16V bivalent	06/05→	60 / 82									
1.9 D (FC0J)	09/99→06/03	48 / 65									
1.9 dCi (FC0V)	07/03→	62 / 84									
1.9 dTi (FC0U)	02/00→	59 / 80									
D 55 1.9 (FC0D)	08/97→	40 / 54									
D 65 1.9 (FC0E, FC02, FC0J, FC0N)	08/97→	47 / 64									
589100			Bos		**2198009**	[+] 21980 18		Ben		**91052800**	ø 203.2 x 37 ⊖ incr. payload
1.2 BiFuel	07/98→07/01	43 / 58		PRO	**92036203**	ø 238 x 20 x 41	⊖ ABS	Bos		**97010100**	⊕ incr. payload
				PRO	**92100903**	ø 259 x 20.6 x 41	⊕ ABS			**84052800**	bore ø 22.2 ø 203.2 x 37 ⊖ incr. payload
					TPM0004					**94013700**	ø 228,6 x 52.5 ⊕ incr. payload
										94027100	ø 203,3 x 50.5 ⊖ incr. payload
										97031900	⊕ incr. payload
589200			Bos		**2198009**	[+] 21980 18		Bos		**97010100**	
1.6	09/99→06/01	66 / 90		PRO	**92100903**	ø 259 x 20.6 x 41					
					TPM0004						
589300			Bos		**2393001**	[–] 23930 18.1		Bos		**2355702**	[–] 23557 16.9
1.6 16V 4x4 (FC0L, FC0P, FC0S)	10/01→	70 / 95	Bos		**82054200**			Bos		**82054300**	
1.9 dCi 4x4 (FC0V)	10/01→	59 / 80		PRO	**92113903**	ø 280 x 24 x 44			PRO	**92181203**	ø 280 x 12 x 45.7
1.9 dCi 4x4 (FC0V)	07/03→	62 / 84			**TPM0004**						
589400			Bos		**2198009**	[+] 21980 18		Bos		**97010100**	
1.6 Flex	03/07→	72 / 98		PRO	**92100903**	ø 259 x 20.6 x 41	⊕ ABS			**97031900**	
					TPM0004						
KANGOO Express (FW0/1_) 02/08→											
589500			Luc		**2397301**	[–] 23973 17.3	SWB wheelb. 2313 mm	TRW		**2469201**	[–] 24692 15
1.5 dCi	02/08→	50 / 68	Bos		**2469301**	[–] 24693 18.7	MWB wheelb. 2697 mm	Luc		**82076100**	
1.5 dCi (FW0F)	02/08→	76 / 103					LWB wheelb. 3081 mm				
1.5 dCi 110	09/10→	80 / 110	Bos		**2469306**	[+] 24693 17.6	MWB wheelb. 2697 mm	Luc		**82063300**	
1.5 dCi 75	09/10→	55 / 75					LWB wheelb. 3081 mm				
1.5 dCi 85 (FW0A, FW0B)	02/08→	63 / 86	Luc		**82054100**		SWB wheelb. 2313 mm				
1.5 dCi 90 (FW0G)	06/09→	66 / 90	Bos		**82074900**		MWB wheelb. 2697 mm				
1.6	02/08→	64 / 87					LWB wheelb. 3081 mm				
1.6	09/08→	81 / 110		PRO	**92202400**	ø 280 x 24 x 44	MWB wheelb. 2697 mm ⊕ rim size 15" rim size 16"				
1.6 16V	02/08→	78 / 106					LWB wheelb. 3081 mm				
1.6 16V LPG	02/08→	72 / 98									
Z.E.	10/11→	44 / 60									

kW / hp

KANGOO Express (FW0/1_) 02/08→

		589500									
1.5 dCi	02/08→	50 / 68		PRO	92241503	ø 258 x 22 x 43.9	SWB wheelb. 2313 mm MWB wheelb. 2697 mm ⊕ rim size 14"				
1.5 dCi (FWOF)	02/08→	76 / 103									
1.5 dCi 110	09/10→	80 / 110									
1.5 dCi 75	09/10→	55 / 75			TPM0004						
1.5 dCi 85 (FWOA, FWOB)	02/08→	63 / 86									
1.5 dCi 90 (FWOG)	06/09→	66 / 90									
1.6	02/08→	64 / 87									
1.6	09/08→	81 / 110									
1.6 16V	02/08→	78 / 106									
1.6 16V LPG	02/08→	72 / 98									
Z.E.	10/11→	44 / 60									

KANGOO Rapid (FC0/1_) 08/97→07/01 → KANGOO Express (FC0/1_), Page 956

KOLEOS (HY_) 09/08→

		589600	Sum		2369801	[+] 23698 16		Ake		2387101	[+] 23871 13.8
2.0 dCi (HYOB)	09/08→	130 / 177									
2.0 dCi (HYOK)	09/08→	110 / 150	Sum		82507500			Ake		82507600	
2.0 dCi 4x4 (HYOB)	09/08→	127 / 173									
2.0 dCi 4x4 (HYOK)	09/08→	110 / 150			92222000	ø 320 x 28 x 44				92144000	ø 292 x 16 x 62
2.5 (HYOC, HYON)	09/08→	126 / 171									
2.5 4x4 (HYOC, HYON)	09/08→	126 / 171		PRO	92222003	ø 320 x 28 x 44			PRO	92144003	ø 292 x 16 x 62
										91068200	ø 172 x 32
										97036900	

LAGUNA I (B56_, 556_) 11/93→03/01

		589700	Luc		2317203	[–] 23172 18.3	04/99→	Luc		91048000	ø 203.2 x 38
1.6 16V (B568, B561)	11/97→03/01	79 / 107									
1.9 dTi (B56J)	10/97→03/01	72 / 98	Gir		2138802	[+] 21388 18.3	→04/99			94019600	ø 203,3 x 50
			Luc		82062800						
				PRO	92113903	ø 280 x 24 x 44					
					TPM0004						
		589800	Luc		2317203	[–] 23172 18.3	04/99→	Bre		2041001	[–] 20410 15 ⊕ rear disc brake →08/97
1.8	06/95→02/01	69 / 94	Gir		2138802	[+] 21388 18.3	→04/99	Bre		2196502	[–] 21965 15 ⊕ rear disc brake 08/97→
			Luc		82062800			Bre		82033300	
				PRO	92064803	ø 262 x 22 x 44		Luc		91048000	ø 203.2 x 38 ⊕ rear drum brake
								Bos		97006400	⊕ rear drum brake
								Luc		84048000	bore ø 19 ø 203.2 x 38 ⊕ rear drum brake
									PRO	92064903	ø 265 x 10.5 x 44.4 ⊕ rear disc brake
										94019500	ø 203,3 x 50 ⊕ rear drum brake
										94019600	ø 203,3 x 50 ⊕ rear drum brake ⊕ ABS
		589900	Gir		2138802	[+] 21388 18.3	⊕ ABS	Bre		2041001	[–] 20410 15 ⊕ ABS
1.8 (B56A/B)	11/93→03/01	66 / 90									
2.2 D (B56F/2)	11/93→03/01	61 / 83	Luc		2159502	[+] 21595 18.3	⊖ ABS	Luc		91048000	ø 203.2 x 38 ⊖ ABS
			Luc		82062800				PRO	92064903	ø 265 x 10.5 x 44.4 ⊕ ABS
				PRO	92064803	ø 262 x 22 x 44				TPM0004	⊕ ABS
					TPM0004					94019600	ø 203,3 x 50 ⊖ ABS
		590000	Gir		2138802	[+] 21388 18.3	⊕ ABS	Bre		2041001	[–] 20410 15 ⊕ ABS
1.8 (B56S/T/0)	08/95→03/01	66 / 90	Luc		2159502	[+] 21595 18.3	⊖ ABS	Luc		91048000	ø 203.2 x 38 ⊖ ABS
			Luc		82062800				PRO	92064903	ø 265 x 10.5 x 44.4 ⊕ ABS
				PRO	92064803	ø 262 x 22 x 44	→05/98			TPM0004	⊕ ABS
				PRO	92113903	ø 280 x 24 x 44	05/98→			94019600	ø 203,3 x 50 ⊖ ABS
					TPM0004						
		590100	Gir		2138802	[+] 21388 18.3		Bre		2041001	[–] 20410 15 ⊕ ABS
1.8 (B56Z)	08/95→03/01	69 / 94	Luc		82062800			Luc		91048000	ø 203.2 x 38 ⊖ ABS

R - S

		kW / hp											
LAGUNA I (B56_, 556_) 11/93→03/01													
590100				**92064803**	ø 262 x 22 x 44				**92064903**	ø 265 x 10.5 x 44.4	⊕ ABS
1.8 (B56Z)	08/95→03/01	69 / 94		**TPM0004**					**TPM0004**		⊕ ABS
									94019600	ø 203,3 x 50	⊖ ABS
590200			Luc	**2317203**	[–] 23172 18.3	04/99→	Luc		**91048000**	ø 203.2 x 38	⊖ E3
1.8 16V (B563, B564)	04/98→03/01	88 / 120	Gir	**2138802**	[+] 21388 18.3	→04/99			**94019600**	ø 203,3 x 50	
			Luc	**82062800**							
				92113803	ø 280 x 24 x 44	⊕ E5					
				92113903	ø 280 x 24 x 44	⊖ E5					
				TPM0004							
590300			Luc	**2317203**	[–] 23172 18.3		Bre		**2196502**	[–] 21965 15	
1.9 dCi (B56W)	09/99→03/01	79 / 107	Luc	**82062800**					**92064903**	ø 265 x 10.5 x 44.4	
2.0 (556A)	09/99→02/01	102 / 139		**92113903**	ø 280 x 24 x 44				**TPM0004**		
2.0 16V (556A/B)	09/99→03/01	103 / 140		**TPM0004**							
590400			Luc	**2317203**	[–] 23172 18.3	04/99→	Bre		**2041001**	[–] 20410 15	⊕ rear disc brake →08/97
2.0	11/93→03/01	70 / 95	Gir	**2138802**	[+] 21388 18.3	→04/99	Bre		**2196502**	[–] 21965 15	⊕ rear disc brake 08/97→
			Luc	**2159502**	[+] 21595 18.3	⊖ ABS →09/94	Bre		**82033300**		
			Luc	**82062800**			Luc		**91048000**	ø 203.2 x 38	⊕ rear drum brake
				92064803	ø 262 x 22 x 44		Bos		**97006400**		⊕ rear drum brake
							Luc		**84048000**	bore ø 19 ø 203.2 x 38	⊕ rear drum brake
									92064903	ø 265 x 10.5 x 44.4	⊕ rear disc brake
									94019500	ø 203,3 x 50	⊕ rear drum brake
									94019600	ø 203,3 x 50	⊕ rear drum brake ⊕ ABS
590500			Luc	**2317203**	[–] 23172 18.3	04/99→	Bre		**2041001**	[–] 20410 15	⊕ E4 E5
2.0	06/95→02/01	84 / 114	Gir	**2138802**	[+] 21388 18.3	→04/99	Luc		**91048000**	ø 203.2 x 38	⊖ E4 E5
			Luc	**82062800**					**92065100**	ø 265 x 10.5 x 44.4	⊕ E4 E5
				92065000	ø 262 x 22 x 44	⊕ E4 E5			**TPM0004**		⊕ E4 E5
				92064803	ø 262 x 22 x 44	⊖ E4 E5			**94019600**	ø 203,3 x 50	⊖ E4 E5
				TPM0004							
590600			Gir	**2138802**	[+] 21388 18.3		Bre		**2041001**	[–] 20410 15	→02/97
2.0	06/95→02/01	103 / 140	Luc	**82062800**			Bre		**2196502**	[–] 21965 15	02/97→
2.0 16V (B56D/M)	06/95→03/01	102 / 139		**92113803**	ø 280 x 24 x 44				**92065100**	ø 265 x 10.5 x 44.4	
				TPM0004					**TPM0004**		
590700			Luc	**2317203**	[–] 23172 18.3	04/99→	Luc		**91048000**	ø 203.2 x 38	⊖ E3
2.0	03/99→03/01	80 / 109	Gir	**2138802**	[+] 21388 18.3	→04/99			**94019600**	ø 203,3 x 50	
			Luc	**82062800**							
				92113903	ø 280 x 24 x 44						
				TPM0004							
590800			Gir	**2138802**	[+] 21388 18.3		Bre		**2041001**	[–] 20410 15	⊕ rear disc brake
2.0 (B56C/H/N)	11/93→03/01	83 / 113	Luc	**82062800**			Luc		**91048000**	ø 203.2 x 38	⊕ rear drum brake
				92065000	ø 262 x 22 x 44	⊕ E4			**92064903**	ø 265 x 10.5 x 44.4	⊕ rear disc brake

R-S

LAGUNA I (B56_, 556_) 11/93→03/01

590800												
2.0 (B56C/H/N)	11/93→03/01	83 / 113		PRO	92064803	ø 262 x 22 x 44	⊖ E4			TPM0004		⊕ rear disc brake
					TPM0004					94019600	ø 203,3 x 50	⊕ rear drum brake
590900			Luc		2317203	[–] 23172 18.3	04/99→	Bre		2041001	[–] 20410 15	→02/97
2.2 dT (B569)	03/96→03/01	83 / 113	Gir		2138802	[+] 21388 18.3	→04/99	Bre		2196502	[–] 21965 15	02/97→
			Luc		82062800					92065100	ø 265 x 10.5 x 44.4	→09/99
				PRO	92113803	ø 280 x 24 x 44	→09/99		PRO	92064903	ø 265 x 10.5 x 44.4	09/99→
				PRO	92113903	ø 280 x 24 x 44	09/99→			TPM0004		
					TPM0004							
591000			Gir		2138802	[+] 21388 18.3		Bre		2041001	[–] 20410 15	
3.0 (B56E/R, B565)	11/93→03/01	123 / 167	Luc		82062800					92065100	ø 265 x 10.5 x 44.4	
				PRO	92113803	ø 280 x 24 x 44				TPM0004		
					TPM0004							
591100			Luc		2317203	[–] 23172 18.3	04/99→	Bre		2196502	[–] 21965 15	
3.0 24V (B56V)	03/97→03/01	140 / 190	Gir		2138802	[+] 21388 18.3	→04/99			92065100	ø 265 x 10.5 x 44.4	→09/99
			Luc		82062800				PRO	92064903	ø 265 x 10.5 x 44.4	09/99→
				PRO	92113803	ø 280 x 24 x 44	→09/99			TPM0004		
				PRO	92113903	ø 280 x 24 x 44	09/99→					
					TPM0004							

LAGUNA I I (B56_, 556_) 11/93→03/01 → LAGUNA I (B56_, 556_), Page 957

LAGUNA I Estate (K56_) 09/95→03/01 → LAGUNA I Grandtour (K56_), Page 959

LAGUNA I Grandtour (K56_) 09/95→03/01

591200			Luc		2317203	[–] 23172 18.3	04/99→	Bre		2196502	[–] 21965 15	⊕ rear disc brake
1.6 16V (K568)	11/97→03/01	79 / 107	Gir		2138802	[+] 21388 18.3	→04/99	Bre		82033300		
1.8 16V (K563, K564)	04/98→03/01	88 / 120	Luc		82062800					91050000	ø 228.6 x 41.5	⊕ rear drum brake
				PRO	92113903	ø 280 x 24 x 44		Bos		97012100		⊕ rear drum brake
										84050001	bore ø 22.2 ø 228.6 x 41.5	⊕ rear drum brake
										92065100	ø 265 x 10.5 x 44.4	
										94013700	ø 228,6 x 52.5	⊕ rear drum brake
591300			Luc		2317203	[–] 23172 18.3	04/99→	Bre		2041001	[–] 20410 15	⊕ rear disc brake →08/97
1.8 (K56S/T/0)	09/95→03/01	66 / 90										
1.8 (K56Z)	09/95→03/01	69 / 94										
2.0 (K56C/H)	09/95→03/01	83 / 113	Gir		2138802	[+] 21388 18.3	→04/99	Bre		2196502	[–] 21965 15	⊕ rear disc brake 08/97→
2.2 D (K56F/2, S56F)	09/95→03/01	61 / 83	Luc		82062800			Bre		82033300		
				PRO	92064803	ø 262 x 22 x 44				91050000	ø 228.6 x 41.5	⊕ rear drum brake
				PRO	92113903	ø 280 x 24 x 44		Bos		97012100		⊕ rear drum brake
										84050000	bore ø 20.6 ø 228.6 x 41.5	⊕ rear drum brake
									PRO	92064903	ø 265 x 10.5 x 44.4	⊕ rear disc brake
										94013700	ø 228,6 x 52.5	⊕ rear drum brake
591400			Luc		2317203	[–] 23172 18.3		Bre		2196502	[–] 21965 15	⊕ rear disc brake
1.9 dCi (K56W)	09/99→03/01	79 / 107	Luc		82062800			Bre		82033300		
				PRO	92113903	ø 280 x 24 x 44				91050000	ø 228.6 x 41.5	⊕ rear drum brake
								Bos		97012100		⊕ rear drum brake
									PRO	92064903	ø 265 x 10.5 x 44.4	

R - S

		kW / hp											
LAGUNA I Grandtour (K56_) 09/95→03/01													
		591400											
1.9 dCi (K56W)	09/99→03/01	79 / 107								94013700	ø 228,6 x 52.5	⊕ rear drum brake
		591500	Luc		2317203	[–] 23172 18.3	04/99→	Bre		2196502	[–] 21965 15	⊕ rear disc brake
1.9 dTi (K56J)	10/97→03/01	72 / 98	Gir		2138802	[+] 21388 18.3	→04/99	Bre		82033300		
			Luc		82062800					91050000	ø 228.6 x 41.5	⊕ rear drum brake
				PRO	92113903	ø 280 x 24 x 44		Bos		97012100		⊕ rear drum brake
										84050001	bore ø 22.2 ø 228.6 x 41.5	⊕ rear drum brake
										92065100	ø 265 x 10.5 x 44.4	
				PRO					PRO	92064903	ø 265 x 10.5 x 44.4	
										94013700	ø 228,6 x 52.5	⊕ rear drum brake
		591600	Luc		2317203	[–] 23172 18.3	04/99→	Bre		2196502	[–] 21965 15	⊕ rear disc brake
2.0	10/98→01/01	84 / 114	Gir		2138802	[+] 21388 18.3	→04/99	Bre		82033300		
			Luc		82062800					91050000	ø 228.6 x 41.5	⊕ rear drum brake
				PRO	92064803	ø 262 x 22 x 44		Bos		97012100		⊕ rear drum brake
				PRO	92113903	ø 280 x 24 x 44				84050000	bore ø 20.6 ø 228.6 x 41.5	⊕ rear drum brake
									PRO	92064903	ø 265 x 10.5 x 44.4	⊕ rear disc brake
										94013700	ø 228,6 x 52.5	⊕ rear drum brake
		591700	Luc		2317203	[–] 23172 18.3		Bre		2196502	[–] 21965 15	
2.0 16V (A56A/B)	09/99→03/01	103 / 140	Luc		82062800			Bre		82033300		
				PRO	92113803	ø 280 x 24 x 44				92065100	ø 265 x 10.5 x 44.4	
					TPM0004							
		591800	Luc		2317203	[–] 23172 18.3	04/99→	Bre		2041001	[–] 20410 15	→08/97
2.0 16V (K56D/M)	09/95→03/01	102 / 139										
2.2 dT (K569)	03/96→03/01	83 / 113										
3.0 (K56R, K565)	02/96→03/01	123 / 167	Gir		2138802	[+] 21388 18.3	→04/99	Bre		2196502	[–] 21965 15	08/97→
3.0 24V (K56V)	03/97→03/01	140 / 190										
			Luc		82062800			Bre		82033300		
				PRO	92113803	ø 280 x 24 x 44				92065100	ø 265 x 10.5 x 44.4	
					TPM0004							
LAGUNA I Nevada (K56_) 09/95→03/01 → LAGUNA I Grandtour (K56_), Page 959													
LAGUNA II (BG0/1_) 03/01→05/05													
		591900	Ate		2324502	[–] 23245 18.3	Ø 300 mm	Ate		2348202	[–] 23482 16.8	
1.6	03/01→05/05	76 / 103	Ate		2324802	[–] 23248 18.3	Ø 308 mm	Ate		82503500		
			Ate		2321502	[–] 23215 18.3	Ø 280 mm		PRO	92142203	ø 274 x 11 x 82.3	
			Ate		82032100							
				PRO	92119003	ø 300 x 26 x 47						
					TPM0004							
		592000	Ate		2324502	[–] 23245 18.3	Ø 300 mm	Ate		2348202	[–] 23482 16.8	
1.6 16V (BG0A, BG0L)	03/01→	79 / 107										
1.8 16V (BG04, BG0B, BG0C, BG0V)	03/01→	86 / 117	Ate		2321502	[–] 23215 18.3	Ø 280 mm	Ate		82503500		
1.8 16V (BG06, BG0J, BG0M)	03/01→	85 / 116										
1.8 16V (BG0B, BG0C, BG0J, BG0M, BG0V)	03/01→	89 / 121	Ate		82032100				PRO	92142203	ø 274 x 11 x 82.3	
1.8 16V (BG0B, BG0M)	03/01→	88 / 120		PRO	92118903	ø 280 x 24 x 47						
1.9 dCI (BG0E)	06/01→	77 / 105										
1.9 dCi (BG0R)	10/01→	74 / 100		PRO	92119003	ø 300 x 26 x 47						
2.0 16V (BG00, BG0K, BG0P, BG0W)	08/02→	99 / 135										
					TPM0004							
		592100	Ate		2321502	[–] 23215 18.3		Ate		2348202	[–] 23482 16.8	
1.6 16V (BG1G, BG1H)	02/05→	82 / 112										
1.9 dCi (BG05)	03/04→	68 / 92										

LAGUNA II (BG0/1_) 03/01→05/05

		kW / hp											
592100			Ate		82032100				Ate		82503500		
1.6 16V (BG1G, BG1H)	02/05→	82 / 112		PRO	92118903	ø 280 x 24 x 47				PRO	92142203	ø 274 x 11 x 82.3	
1.9 dCi (BG05)	03/04→	68 / 92			TPM0004								
592200			Ate		2324502	[–] 23245 18.3	Ø 300 mm		Ate		2348202	[–] 23482 16.8	
1.6 LPG	03/01→05/05	76 / 103											
1.6 LPG	03/01→05/05	79 / 107	Ate		2321502	[–] 23215 18.3	Ø 280 mm		Ate		82503500		
1.9 dCi	03/01→	79 / 107											
			Ate		82032100		Ø 300 mm			PRO	92142203	ø 274 x 11 x 82.3	
			Ate		82071800		Ø 280 mm						
				PRO	92118903	ø 280 x 24 x 47							
				PRO	92119003	ø 300 x 26 x 47							
					TPM0004								
592300			Ate		2324502	[–] 23245 18.3			Ate		2348202	[–] 23482 16.8	
1.9 dCi	09/05→	85 / 116											
1.9 dCi	09/05→	92 / 125	Ate		2321502	[–] 23215 18.3			Ate		82503500		
			Ate		82032100					PRO	92142203	ø 274 x 11 x 82.3	
				PRO	92119003	ø 300 x 26 x 47					TPM0004		
592400			Ate		2324502	[–] 23245 18.3			Ate		2348202	[–] 23482 16.8	
1.9 dCi (BG08, BG0G)	03/01→	88 / 120											
1.9 dCi (BG1A, BG1V)	05/05→	96 / 130	Ate		82032100				Ate		82503500		
1.9 dCi (BG1A, BG1W)	01/05→	81 / 110											
2.0 16V IDE (BG0N)	04/01→	103 / 140		PRO	92119003	ø 300 x 26 x 47				PRO	92142203	ø 274 x 11 x 82.3	
2.0 dCi (BG1T)	08/05→	110 / 150											
2.2 dCi (BG09)	04/04→10/05	85 / 116			TPM0004								
592500			Ate		2324502	[–] 23245 18.3	Ø 300 mm		Ate		2348202	[–] 23482 16.8	
2.0 16V	08/02→	98 / 133											
			Ate		2324802	[–] 23248 18.3	Ø 308 mm		Ate		82503500		
			Ate		2321502	[–] 23215 18.3	Ø 280 mm			PRO	92142203	ø 274 x 11 x 82.3	
			Ate		82032100		Ø 300 mm Ø 308 mm						
			Ate		82071800		Ø 280 mm						
					92157700	ø 308 x 28 x 47							
				PRO	92118903	ø 280 x 24 x 47							
				PRO	92119003	ø 300 x 26 x 47							
				PRO	92174003	ø 308 x 28 x 47							
					TPM0004								
592600			Ate		2324502	[–] 23245 18.3	Ø 300 mm		Ate		2348202	[–] 23482 16.8	
2.0 16V	01/05→	125 / 170											
2.0 16V	01/05→	150 / 204	Ate		2324802	[–] 23248 18.3	Ø 308 mm		Ate		82503500		
2.9 V6 24V	09/02→12/05	157 / 210											
			Ate		82032100		Ø 300 mm Ø 308 mm			PRO	92142203	ø 274 x 11 x 82.3	
					92157700	ø 308 x 28 x 47							
				PRO	92119003	ø 300 x 26 x 47							
				PRO	92174003	ø 308 x 28 x 47							
					TPM0004								
592700			Ate		2324802	[–] 23248 18.3			Ate		2348202	[–] 23482 16.8	
2.0 16V Turbo (BG0S, BG0Z, BG1L, BG1M)	01/03→	120 / 163											
			Ate		82032100				Ate		82503500		
					92157700	ø 308 x 28 x 47				PRO	92142203	ø 274 x 11 x 82.3	
					TPM0004								
592800			Ate		2324502	[–] 23245 18.3	Ø 300 mm		Ate		2348202	[–] 23482 16.8	
2.0 dCi (BG14, BG1S)	01/06→	127 / 173											

R - S

		kW / hp									
LAGUNA II (BG0/1_) 03/01→05/05											
592800			Ate		2324802	[–] 23248 18.3	Ø 308 mm	Ate		82503500	
2.0 dCi (BG14, BG1S)	01/06→	127 / 173	Ate		82032100				PRO	92142203	ø 274 x 11 x 82.3
					92157700	ø 308 x 28 x 47					
				PRO	92119003	ø 300 x 26 x 47					
					TPM0004						
592900			Ate		2324502	[–] 23245 18.3	Ø 300 mm	Ate		2348202	[–] 23482 16.8
2.2 dCi	05/05→	102 / 140	Ate		2324802	[–] 23248 18.3	Ø 308 mm	Ate		82503500	
			Ate		82032100		Ø 300 mm		PRO	92142203	ø 274 x 11 x 82.3
					92157700	ø 308 x 28 x 47					
				PRO	92119003	ø 300 x 26 x 47					
				PRO	92174003	ø 308 x 28 x 47					
					TPM0004						
593000			Ate		2324502	[–] 23245 18.3	Ø 300 mm	Ate		2348202	[–] 23482 16.8
2.2 dCi (BG0F)	10/01→	110 / 150	Ate		2324802	[–] 23248 18.3	Ø 308 mm	Ate		82503500	
3.0 V6 24V (BG01, BG02, BG0D, BG0Y)	03/01→	152 / 207	Ate		82032100				PRO	92142203	ø 274 x 11 x 82.3
					92157700	ø 308 x 28 x 47					
				PRO	92119003	ø 300 x 26 x 47					
				PRO	92174003	ø 308 x 28 x 47					
					TPM0004						
LAGUNA II Grandtour (KG0/1_) 03/01→10/05											
593100			Ate		2324502	[–] 23245 18.3	Ø 300 mm	Ate		2348202	[–] 23482 16.8
1.6	03/01→10/05	76 / 103	Ate		2324802	[–] 23248 18.3	Ø 308 mm	Ate		82503500	
			Ate		2321502	[–] 23215 18.3	Ø 280 mm		PRO	92142203	ø 274 x 11 x 82.3
			Ate		82032100						
				PRO	92119003	ø 300 x 26 x 47					
					TPM0004						
593200			Ate		2324502	[–] 23245 18.3	Ø 300 mm	Ate		2348202	[–] 23482 16.8
1.6 16V	02/05→	82 / 112									
1.6 FlexFuel	06/01→10/03	76 / 103	Ate		2321502	[–] 23215 18.3	Ø 280 mm	Ate		82503500	
1.8 16V	03/01→	86 / 117									
1.8 16V	03/01→	89 / 121									
1.9 dCi	03/01→	79 / 107	Ate		82032100		Ø 300 mm		PRO	92142203	ø 274 x 11 x 82.3
2.0	09/02→05/05	95 / 129									
2.0	09/02→05/05	97 / 132	Ate		82071800		Ø 280 mm				
				PRO	92118903	ø 280 x 24 x 47					
				PRO	92119003	ø 300 x 26 x 47					
					TPM0004						
593300			Ate		2324502	[–] 23245 18.3	Ø 300 mm	Ate		2348202	[–] 23482 16.8
1.6 16V (KG0A, KG0L)	03/01→	79 / 107									
1.6 Bifuel	06/05→12/07	79 / 107	Ate		2321502	[–] 23215 18.3	Ø 280 mm	Ate		82503500	
1.8 16V (KG0B, KG0M)	03/01→	88 / 120									
1.8 16V (KG0J)	03/01→	85 / 116									
1.9 dCi (KG0E, KG0R)	10/01→	74 / 100	Ate		82032100				PRO	92142203	ø 274 x 11 x 82.3
1.9 dCI (KG0E)	06/01→	77 / 105									
1.9 dCi (KG1A, KG1W)	01/05→	81 / 110									
2.0 16V	10/04→09/07	98 / 133		PRO	92118903	ø 280 x 24 x 47					
2.0 16V (KG0O, KG0K, KG0W)	08/02→	99 / 135		PRO	92119003	ø 300 x 26 x 47					
					TPM0004						
593400			Ate		2321502	[–] 23215 18.3		Ate		2348202	[–] 23482 16.8
1.9 dCi	08/03→09/07	66 / 90									
1.9 dCi (KG05)	03/04→	68 / 92									

R-S

		kW / hp										
LAGUNA II Grandtour (KG0/1_) 03/01→10/05												
		593400	Ate		82032100				Ate		82503500			
1.9 dCi	08/03→09/07	66 / 90		PRO	92118903	ø 280 x 24 x 47				PRO	92142203	ø 274 x 11 x 82.3	
1.9 dCi (KG05)	03/04→	68 / 92			TPM0004								
		593500	Ate		2324502	[–] 23245 18.3			Ate		2348202	[–] 23482 16.8	
1.9 dCi	09/05→	92 / 125											
1.9 dCi (KG0G)	03/01→	88 / 120											
1.9 dCi (KG12)	08/05→09/07	85 / 116	Ate		82032100				Ate		82503500		
1.9 dCi (KG1V)	05/05→	96 / 130											
2.0 16V IDE (KG0N)	04/01→	103 / 140		PRO	92119003	ø 300 x 26 x 47				PRO	92142203	ø 274 x 11 x 82.3	
2.0 dCi (KG1T)	08/05→	110 / 150											
2.2 dCi (KG09)	04/04→10/05	85 / 116			TPM0004								
		593600	Ate		2324502	[–] 23245 18.3	Ø 300 mm		Ate		2348202	[–] 23482 16.8	
2.0 16V	01/05→	125 / 170											
2.0 16V	01/05→	150 / 204	Ate		2324802	[–] 23248 18.3	Ø 308 mm		Ate		82503500		
2.2 dCi	05/05→	102 / 140											
2.9 V6 24V	09/02→12/05	157 / 210	Ate		82032100		Ø 300 mm Ø 308 mm			PRO	92142203	ø 274 x 11 x 82.3	
					92157700	ø 308 x 28 x 47							
				PRO	92119003	ø 300 x 26 x 47							
				PRO	92174003	ø 308 x 28 x 47							
					TPM0004								
		593700	Ate		2324802	[–] 23248 18.3			Ate		2348202	[–] 23482 16.8	
2.0 16V Turbo (KG0S, KG0Z, KG1L, KG1M)	01/03→	120 / 163											
2.0 dCi (KG1S)	01/06→	127 / 173	Ate		82032100				Ate		82503500		
					92157700	ø 308 x 28 x 47				PRO	92142203	ø 274 x 11 x 82.3	
					TPM0004								
		593800	Ate		2324502	[–] 23245 18.3	Ø 300 mm		Ate		2348202	[–] 23482 16.8	
2.2 dCi (KG0F)	10/01→	110 / 150											
			Ate		2324802	[–] 23248 18.3	Ø 308 mm		Ate		82503500		
			Ate		82032100					PRO	92142203	ø 274 x 11 x 82.3	
					92157700	ø 308 x 28 x 47							
				PRO	92119003	ø 300 x 26 x 47							
				PRO	92174003	ø 308 x 28 x 47							
					TPM0004								
		593900	Ate		2324802	[–] 23248 18.3			Ate		2348202	[–] 23482 16.8	
3.0 V6 24V (KG0D)	03/01→	152 / 207											
			Ate		82032100				Ate		82503500		
					92157700	ø 308 x 28 x 47				PRO	92142203	ø 274 x 11 x 82.3	
				PRO	92174003	ø 308 x 28 x 47							
					TPM0004								
LAGUNA II Sport Tourer (KG0/1_) 03/01→10/05 → LAGUNA II Grandtour (KG0/1_), Page 962												
LAGUNA III (BT0/1) 10/07→												
		594000	Ate		2321502	[–] 23215 18.3			Ate		2413701	[–] 24137 16.7	
1.5 dCi (BT00, BT0A, BT0T, BT1J)	10/07→	81 / 110											
1.6 16V (BT04, BT0D, BT0U)	10/07→	81 / 110	Ate		82071800				Ate	epad	2413781	[–] 24137 16.7	
				PRO	92195503	ø 280 x 24 x 44			Ate		82503500		
					TPM0004								
		594100	Ate		2470901	[–] 24709 18			Ate		2413701	[–] 24137 16.7	
2.0 16V (BT05, BT0F, BT0W)	10/07→	103 / 140											
2.0 16V Hi-Flex (BT1H)	10/07→	103 / 140		PRO	92195603	ø 296 x 26 x 43.9			Ate	epad	2413781	[–] 24137 16.7	
2.0 16V Turbo	10/07→	125 / 170											
2.0 dCi (BT01, BT09, BT12, BT1S)	10/07→	110 / 150			TPM0004				Ate		82503500		
		594200	Ate		2321502	[–] 23215 18.3	⊕ engine BT1A		Ate		2413701	[–] 24137 16.7	
2.0 dCi (BT08, BT0K, BT0J, BT14, BT1A, BT1D)	10/07→	96 / 131											

R - S

		kW / hp											
LAGUNA III (BT0/1) 10/07→													
594200			Ate		2470901	[–] 24709 18	⊕ engine BT08/BT1D	Ate		2413781	[–] 24137 16.7	
2.0 dCi (BT08, BT0K, BT0J, BT14, BT1A, BT1D)	10/07→	96 / 131	Ate		82071800		⊕ engine BT1A	Ate		82503500		
				PRO	92195603	ø 296 x 26 x 43.9						
					TPM0004							
594300			Ate		2487001	[–] 24870 18		Ate		2413701	[–] 24137 16.7	
2.0 dCi (BT0M, BT0N, BT19)	01/08→	127 / 173										
2.0 dCi GT (BT1E, BT1N)	03/08→	131 / 178										
2.0 GT	03/08→	150 / 204										
3.0 dCi (BT03, BT13)	09/08→	173 / 235		PRO	92195403	ø 320 x 28 x 44		Ate		2413781	[–] 24137 16.7	
					TPM0004			Ate		82503500		
594400			Ate		2487001	[–] 24870 18		Ate		2413701	[–] 24137 16.7	
3.5 V6 (BT0C, BT0P)	04/08→	175 / 238										
				PRO	92195403	ø 320 x 28 x 44		Ate		2413781	[–] 24137 16.7	
								Ate		82503500		
LAGUNA III Grandtour (KT0/1) 10/07→													
594500			Ate		2321502	[–] 23215 18.3		Ate		2413701	[–] 24137 16.7	
1.5 dCi (KT0A)	10/07→	81 / 110										
1.6 16V (KT0D)	10/07→	81 / 110										
2.0 dCi (KT01, KT08, KT0K, KT0J, KT1A, KT1D)	10/07→	96 / 131	Ate		82071800			Ate		2413781	[–] 24137 16.7	
				PRO	92195503	ø 280 x 24 x 44		Ate		82503500		
					TPM0004							
594600			Ate		2470901	[–] 24709 18		Ate		2413701	[–] 24137 16.7	
2.0 16V (KT0F, KT0W)	10/07→	103 / 140										
2.0 16V Hi-Flex (KT1H)	10/07→	103 / 140										
2.0 16V Turbo	10/07→	125 / 170		PRO	92195603	ø 296 x 26 x 43.9		Ate		2413781	[–] 24137 16.7	
2.0 dCi (KT01, KT09, KT12, KT1S)	10/07→	110 / 150										
					TPM0004			Ate		82503500		
594700			Ate		2487001	[–] 24870 18		Ate		2413701	[–] 24137 16.7	
2.0 dCi (KT0M, KT0N, KT19)	01/08→	127 / 173										
2.0 GT	03/08→	150 / 204										
3.0 dCi (KT03, KT13)	09/08→	173 / 235		PRO	92195403	ø 320 x 28 x 44		Ate		2413781	[–] 24137 16.7	
					TPM0004			Ate		82503500		
594800			Ate		2470901	[–] 24709 18	⊖ 4-wheel steer.	Ate		2413701	[–] 24137 16.7	
2.0 dCi GT (KT11, KT1E, KT1N)	03/08→	131 / 178	Ate		2487001	[–] 24870 18	⊕ 4-wheel steer.	Ate		2413781	[–] 24137 16.7	
				PRO	92195403	ø 320 x 28 x 44	⊕ 4-wheel steer.	Ate		82503500		
				PRO	92195603	ø 296 x 26 x 43.9	⊖ 4-wheel steer.					
					TPM0004							
594900			Ate		2321502	[–] 23215 18.3		Ate		2413701	[–] 24137 16.7	
3.5 V6 (KT0C, KT0P)	04/08→	175 / 238	Ate		82032100			Ate		2413781	[–] 24137 16.7	
			Ate		82071800			Ate		82503500		
				PRO	92195503	ø 280 x 24 x 44						
LAGUNA III Sportour (KT0/1) 10/07→ → LAGUNA III Grandtour (KT0/1), Page 964													
LAGUNA III Sport Tourer (KT0/1) 10/07→ → LAGUNA III Grandtour (KT0/1), Page 964													
LAGUNA Coupe (DT0/1) 09/08→													
595000			Ate		2321502	[–] 23215 18.3		Ate		2413701	[–] 24137 16.7	
1.5 dCi	03/12→	81 / 110	Ate		82032100			Ate		2413781	[–] 24137 16.7	
				PRO	92195503	ø 280 x 24 x 44		Ate		82503500		
595100			Ate		2470901	[–] 24709 18		Ate		2413701	[–] 24137 16.7	
2.0 16V Turbo	09/08→	125 / 170										
3.5 V6 (DT0P)	09/08→	175 / 238		PRO	92195603	ø 296 x 26 x 43.9		Ate		2413781	[–] 24137 16.7	
					TPM0004			Ate		82503500		
595200			Ate		2470901	[–] 24709 18	⊖ 4-wheel steer.	Ate		2413701	[–] 24137 16.7	
2.0 dCi	09/08→	127 / 173										
2.0 dCi (DT01, DT09, DT12, DT1D)	09/08→	110 / 150	Ate		2487001	[–] 24870 18	⊕ 4-wheel steer.	Ate		2413781	[–] 24137 16.7	

R - S

		kW / hp											
LAGUNA Coupe (DT0/1) 09/08→													
		595200											
2.0 dCi	09/08→	127 / 173		PRO	92195403	ø 320 x 28 x 44	⊕ 4-wheel steer.	Ate		82503500			
2.0 dCi (DT01, DT09, DT12, DT1D)	09/08→	110 / 150		PRO	92195603	ø 296 x 26 x 43.9	⊖ 4-wheel steer.						
					TPM0004								
		595300	Ate		2487001	[–] 24870 18		Ate		2413701	[–] 24137 16.7		
2.0 dCi GT (DT11, DT1E, DT1N)	09/08→	131 / 178		PRO	92195403	ø 320 x 28 x 44		Ate	epad	2413781	[–] 24137 16.7		
2.0 GT	09/08→	150 / 204											
3.0 dCi	01/12→	177 / 241			TPM0004			Ate		82503500			
3.0 dCi (DT03)	09/08→	173 / 235											
LATITUDE (L70_) 07/10→													
		595400	Ate		2470901	[–] 24709 18		Ate		82503500			
1.5 dCi (L70R)	07/10→	81 / 110											
2.5 dCi	05/11→	133 / 181	Ate		82076800				ABS	92233100	ø 300 x 11 x 81.7		
2.5 V6 (L707)	05/11→	130 / 177			TPM0004								
		595500	Ate		2470901	[–] 24709 18		Ate		2526501	[–] 25265 16.2		
2.0 16V (L70B)	02/11→	103 / 140											
2.0 16V eco2 (L70B)	02/11→	103 / 140	Ate		82076800			Ate		82503500			
2.0 dCi (L702, L703, L704, L707)	02/11→	130 / 177											
2.0 dCi 150 (L70H)	02/11→	110 / 150		PRO	92195603	ø 296 x 26 x 43.9			ABS	92233100	ø 300 x 11 x 81.7		
2.0 dCi 175 (L70Y)	05/11→	127 / 173			TPM0004								
		595600	Ate		2487001	[–] 24870 18		Ate		2526501	[–] 25265 16.2		
3.0 dCi 240 (L70G)	02/11→	177 / 241											
					TPM0004			Ate		82503500			
									ABS	92233100	ø 300 x 11 x 81.7		
LOGAN (LS_) 09/04→													
		595700	Luc		2146306	[–] 21463 18.2	Ø 238 mm	Luc		91048000	ø 203.2 x 38	8" -brake	
1.0 Hi-Flex	07/07→	56 / 76											
1.4	09/04→	55 / 75	Luc		2146304	[+] 21463 18.2	Ø 259 mm	Bos		91053700	ø 180 x 42	7" -brake	
1.6	04/07→	82 / 112	Luc		82518600		Ø 259 mm			97031000		8" Bosch -brake	
				PRO	92036103	ø 238 x 12 x 41				97037900		8" TRW -brake	
				PRO	92175103	ø 259 x 12 x 41.4				94019700	ø 203,3 x 50.5	⊖ ABS	
				PRO	92100903	ø 259 x 20.6 x 41				94023600	ø 180,2 x 53.5	⊖ ABS	
					TPM0004								
		595800	Luc		2146306	[–] 21463 18.2	Ø 238 mm	Luc		91048000	ø 203.2 x 38	Lucas	
1.5 dCi	04/07→	50 / 68	Luc		2146304	[+] 21463 18.2	Ø 259 mm	Bos		91060200	ø 203.2 x 38	Bosch	
			Luc		82518600		Ø 259 mm	Ben		97010400		Lucas	
				PRO	92036103	ø 238 x 12 x 41				97031000		Bosch	
				PRO	92175103	ø 259 x 12 x 41.4				94019700	ø 203,3 x 50.5	⊖ ABS	
				PRO	92100903	ø 259 x 20.6 x 41				94023600	ø 180,2 x 53.5		
					TPM0004					94027500	ø 203,3 x 50.5	⊕ ABS	
		595900	Luc		2146306	[–] 21463 18.2	Ø 238 mm						
1.5 dCi	02/08→	63 / 86	Luc		2146304	[+] 21463 18.2	Ø 259 mm						
			Luc		82518600		Ø 259 mm						
				PRO	92036103	ø 238 x 12 x 41							
				PRO	92175103	ø 259 x 12 x 41.4							
				PRO	92100903	ø 259 x 20.6 x 41							
					TPM0004								
		596000	Luc		2146306	[–] 21463 18.2	Ø 238 mm	Luc		91048000	ø 203.2 x 38	Lucas	
1.6	09/04→	64 / 87											
1.6	02/07→	80 / 109											
1.6	04/07→	77 / 105											

R - S

kW / hp												
LOGAN (LS_) 09/04→												
1.6	05/08→	66 / 90	Luc	2146304	[+] 21463 18.2	Ø 259 mm	Bos	91060200	ø 203.2 x 38	Bosch
1.6 Flex	07/07→	82 / 112								
1.6 Flex	07/07→03/10	79 / 107	Luc	82518600		Ø 259 mm	Ben	97010400		Lucas
1.6 Flex	11/07→	68 / 92								
1.6 Flex	11/07→08/12	70 / 95		PRO 92036103	ø 238 x 12 x 41			97031000		Bosch
1.6 Flex	11/13→	78 / 106		PRO 92175103	ø 259 x 12 x 41.4		Bos	84060201	bore ø 19 ø 203.2 x 38	Bosch
				PRO 92100903	ø 259 x 20.6 x 41			94019700	ø 203,3 x 50.5	⊖ ABS
				TPM0004				94023600	ø 180,2 x 53.5	
								94027500	ø 203,3 x 50.5	⊕ ABS
LOGAN Estate (KS_) 04/07→										
		596100	Luc	2146306	[–] 21463 18.2		Luc	91048000	ø 203.2 x 38	Lucas
1.4	10/07→	55 / 75	Luc	2146304	[+] 21463 18.2		Bos	91060200	ø 203.2 x 38	Bosch
			Luc	82508200			Ben	97010400		Lucas
			Luc	82062800		⊕ ABS		97031000		Bosch
				PRO 92036103	ø 238 x 12 x 41	⊖ ABS	Bos	84069300	bore ø 22 ø 228.6 x 42	
				PRO 92175103	ø 259 x 12 x 41.4	⊕ ABS		94023600	ø 180,2 x 53.5	
				TPM0004						
		596200	Luc	2146306	[–] 21463 18.2		Luc	91048000	ø 203.2 x 38	Lucas
1.5 dCi	04/07→	50 / 68	Luc	2146304	[+] 21463 18.2		Bos	91060200	ø 203.2 x 38	Bosch
1.6	04/07→	64 / 87	Luc	82508200			Ben	97010400		Lucas
			Luc	82062800		⊕ ABS		97031000		Bosch
				PRO 92036103	ø 238 x 12 x 41	⊖ ABS		94023600	ø 180,2 x 53.5	
				PRO 92175103	ø 259 x 12 x 41.4	⊕ ABS				
				TPM0004						
		596300	Luc	2397301	[–] 23973 17.3	⊕ ABS 12/08→	Luc	91048000	ø 203.2 x 38	Lucas
1.5 dCi	02/08→	63 / 86	Ate	2467301	[–] 24673 18	⊕ ABS →11/08	Bos	91060200	ø 203.2 x 38	Bosch
			Luc	2146304	[+] 21463 18.2	⊖ ABS		91069300	ø 228.6 x 42	
			Luc	82508200		⊖ ABS	Ben	97010400		Lucas
			Luc	82062800		⊕ ABS		97031000		Bosch
				PRO 92036103	ø 238 x 12 x 41	⊖ ABS		94023600	ø 180,2 x 53.5	
				PRO 92119203	ø 260 x 22 x 44					
				TPM0004						
		596400	Luc	2146306	[–] 21463 18.2		Luc	91048000	ø 203.2 x 38	Lucas
1.6	04/07→	77 / 105	Luc	2146304	[+] 21463 18.2		Bos	91060200	ø 203.2 x 38	Bosch
			Luc	82508200			Ben	97010400		Lucas
			Luc	82062800		⊕ ABS		97031000		Bosch
				PRO 92036103	ø 238 x 12 x 41	⊖ ABS		94023600	ø 180,2 x 53.5	
				TPM0004						
LOGAN EXPRESS 04/07→										
		596500	Luc	2397301	[–] 23973 17.3	⊕ ABS Ø 260 mm	Luc	91048000	ø 203.2 x 38	Lucas
1.5 dCi	04/07→	50 / 68	Ate	2467301	[–] 24673 18	⊖ ABS Ø 259 mm	Bos	91060200	ø 203.2 x 38	Bosch
1.6	04/07→	64 / 87	Luc	82054900		Ø 260 mm		91069300	ø 228.6 x 42	

		kW / hp									
LOGAN EXPRESS 04/07→											
		596500									
1.5 dCi	04/07→	50 / 68		PRO 92100903	ø 259 x 20.6 x 41	⊖ ABS	Ben	97010400		Lucas
1.6	04/07→	64 / 87		PRO 92119203	ø 260 x 22 x 44			97031000		Bosch
				TPM0004			Bos	84069300	bore ø 22 ø 228.6 x 42	
								94023600	ø 180,2 x 53.5	
LOGAN Kombi (KS_) 04/07→ → LOGAN Estate (KS_), Page 966											
MASTER II Box (FD) 07/98→02/12											
		596600	Bos	2330201	[–] 23302 17.5	⊕ rim size 15"	Bos	2366901	[–] 23669 16.8	⊕ rear disc brake	
1.9 dCi 80	11/01→	60 / 82									
1.9 dTI	09/00→	59 / 80	Bos	2361301	[–] 23613 17.8	⊕ rim size 16"	Bos	82063800			
2.2 dCI 90	09/00→	66 / 90									
2.5 D	07/98→01/01	59 / 80	Bos	82076300			Bos	82510100			
2.5 dCi	01/04→	84 / 114									
2.5 dCi	08/06→	74 / 101		92097700	ø 280 x 24 x 61.5	⊕ rim size 15"		91054500	ø 280 x 65	⊕ rear drum brake	
2.5 dCi	08/06→	88 / 120									
2.5 dCi	08/06→	107 / 146		PRO 92115903	ø 305.5 x 28 x 77.8	⊕ rim size 16"		97014600		⊕ rear drum brake	
2.5 dCi 100 (FDOU, FDOV)	10/03→	73 / 99									
2.5 dCi 120	10/01→	84 / 115		TPM0004				83054500	bore ø 23.8 ø 280 x 65	⊕ rear drum brake	
2.8 dTI	07/98→10/01	84 / 114									
3.0 dCi 120	06/05→	85 / 116						84054500	bore ø 23.8 ø 280 x 65	⊕ rear drum brake	
3.0 dCi 140 (HDOS, FDOS, HD1S)	10/03→	100 / 136									
3.0 dCi 160	06/05→	115 / 156						PRO 92111203	ø 305 x 12 x 66.8	⊕ rear disc brake	
								TPM0004			
								94027000	ø 280,0 x 69.5	⊕ rear drum brake	
		596700	Bos	2361301	[–] 23613 17.8		Bos	2366901	[–] 23669 16.8		
2.5 dCi 4x4	10/04→02/12	85 / 115									
				PRO 92115903	ø 305.5 x 28 x 77.8			PRO 92111203	ø 305 x 12 x 66.8		
				TPM0004				TPM0004			
		596800	Bos	2361301	[–] 23613 17.8		Bos	2366901	[–] 23669 16.8	⊕ rear disc brake	
2.8 dTI 4x4	01/02→09/04	84 / 114									
				PRO 92115903	ø 305.5 x 28 x 77.8			PRO 92111203	ø 305 x 12 x 66.8	⊕ rear disc brake	
				TPM0004				TPM0004		⊕ rear disc brake	
MASTER II Bus (JD) 07/98→											
		596900	Bos	2330201	[–] 23302 17.5	⊕ rim size 15"	Bos	2366901	[–] 23669 16.8	⊕ rear disc brake	
1.9 dCi 80	11/01→	60 / 82									
1.9 dTI	09/00→	59 / 80	Bos	2361301	[–] 23613 17.8	⊕ rim size 16"	Bos	82063800			
2.2 dCI 90	09/00→	66 / 90									
2.5 D	07/98→01/01	59 / 80	Bos	82076300			Bos	82510100			
2.5 dCi	01/04→	84 / 114									
2.5 dCi	08/06→	74 / 101		92097700	ø 280 x 24 x 61.5	⊕ rim size 15"		91054500	ø 280 x 65	⊕ rear drum brake	
2.5 dCi	08/06→	88 / 120									
2.5 dCi	08/06→	107 / 146		PRO 92115903	ø 305.5 x 28 x 77.8	⊕ rim size 16"		97014600		⊕ rear drum brake	
2.5 dCi 100 (JDCV)	10/03→	73 / 99									
2.5 dCi 120	10/01→	84 / 115		TPM0004				83054500	bore ø 23.8 ø 280 x 65	⊕ rear drum brake	
2.8 dTI	07/98→10/01	84 / 114									
3.0 dCi 140 (JDOT)	10/03→	100 / 136						84054500	bore ø 23.8 ø 280 x 65	⊕ rear drum brake	
								PRO 92111203	ø 305 x 12 x 66.8	⊕ rear disc brake	
								TPM0004			
								94027000	ø 280,0 x 69.5	⊕ rear drum brake	
MASTER II Kasten (FD) 07/98→02/12 → MASTER II Box (FD), Page 967											
MASTER II Platform/Chassis (ED/HD/UD) 07/98→											
		597000	Bos	2330201	[–] 23302 17.5	⊕ rim size 15"	Bos	2366901	[–] 23669 16.8	⊕ rear disc brake	
2.2 dCI 90	09/00→	66 / 90									
2.5 D	07/98→01/01	59 / 80	Bos	2361301	[–] 23613 17.8	⊕ rim size 16"	Bos	82063800			
2.5 dCi	01/04→	84 / 114									
2.5 dCi	08/06→	74 / 101	Bos	82076300			Bos	82510100			
2.5 dCi	08/06→	88 / 120									
2.5 dCi	08/06→	107 / 146		92097700	ø 280 x 24 x 61.5	⊕ rim size 15"		91054500	ø 280 x 65	⊕ rear drum brake	
2.5 dCi 100 (ED4V, ED8V)	10/03→	73 / 99									
2.5 dCi 120	10/01→	84 / 115		PRO 92115903	ø 305.5 x 28 x 77.8	⊕ rim size 16"		97014600		⊕ rear drum brake	
2.8 dTI	07/98→10/01	84 / 114									
3.0 dCi 120	06/05→	85 / 116		TPM0004				83054500	bore ø 23.8 ø 280 x 65	⊕ rear drum brake	
3.0 dCi 140 (EDOS, UDOS)	10/03→	100 / 136									
3.0 dCi 160	06/05→	115 / 156									

		kW / hp												
MASTER II Platform/Chassis (ED/HD/UD) 07/98→														
		597000												
2.2 dCI 90	09/00→	66 / 90									84054500	bore ø 23.8 ø 280 x 65	⊕ rear drum brake
2.5 D	07/98→01/01	59 / 80								PRO	92111203	ø 305 x 12 x 66.8	⊕ rear disc brake
2.5 dCi	01/04→	84 / 114									TPM0004		
2.5 dCi	08/06→	74 / 101									94027000	ø 280,0 x 69.5	⊕ rear drum brake
2.5 dCi	08/06→	88 / 120											
2.5 dCi	08/06→	107 / 146											
2.5 dCi 100 (ED4V, ED8V)	10/03→	73 / 99											
2.5 dCi 120	10/01→	84 / 115											
2.8 dTI	07/98→10/01	84 / 114											
3.0 dCi 120	06/05→	85 / 116											
3.0 dCi 140 (EDOS, UDOS)	10/03→	100 / 136											
3.0 dCi 160	06/05→	115 / 156											
MASTER II Pritsche/Fahrgestell (ED/HD/UD) 07/98→ → MASTER II Platform/Chassis (ED/HD/UD), Page 967														
MASTER II Van (FD) 07/98→02/12 → MASTER II Box (FD), Page 967														
MASTER III Box (FV) 02/10→														
		597100	Bre		2514701	[+] 25147 18			Bos		2511201	[+] 25112 18.1	⊕ single tyre
2.3 dCi [RWD] (FVOB, FVOC, FVOD)	02/10→	74 / 101	Bos		82076300				Bre		2517201	[+] 25172 18	⊕ dual tyres
2.3 dCi [RWD] (FVOC, FVOD, FVOH, FVOJ)	02/10→	92 / 125			92228600	ø 302 x 28 x 70					92228800	ø 305 x 12 x 71.5	⊕ single tyre
2.3 dCi [RWD] (FVOE, FVOF, FVOJ)	02/10→	107 / 146			TPM0004						92230800	ø 302 x 18 x 50.9	⊕ dual tyres
		597200	Bre		2514701	[+] 25147 18			Bos		2511201	[+] 25112 18.1	
2.3 dCi FWD (FVOA, FVOB, FVOG, FVOK)	02/10→	74 / 101	Bos		82076300						92228700	ø 305 x 12 x 71.5	
2.3 dCi FWD (FVOC, FVOD)	02/10→	92 / 125			92228600	ø 302 x 28 x 70					TPM0004		
2.3 dCi FWD (FVOE, FVOF, FVOH, FVOJ)	02/10→	107 / 146			TPM0004								
MASTER III Bus (JV) 02/11→														
		597300	Bre		2514701	[+] 25147 18			Bos		2511201	[+] 25112 18.1	
2.3 dCi 100 FWD (JVOA, JVOB)	02/11→	74 / 101	Bos		82076300						92228700	ø 305 x 12 x 71.5	
2.3 dCi 125 FWD (JVOC, JVOD, JVOH)	02/11→	92 / 125			92228600	ø 302 x 28 x 70					TPM0004		
2.3 dCi 150	10/12→	110 / 150			TPM0004								
2.3 dCi FWD (JVOF, JVOH)	02/11→	107 / 146											
MASTER III Kasten (FV) 02/10→ → MASTER III Box (FV), Page 968														
MASTER III Platform/Chassis (EV, HV, UV) 02/10→														
		597400	Bre		2514701	[+] 25147 18			Bos		2511201	[+] 25112 18.1	⊕ single tyre
2.3 dCi [RWD] (HVOC, HVOD, UVOC, UVOD, UVOH, UVOJ)	02/10→	92 / 125	Bos		82076300				Bre		2517201	[+] 25172 18	⊕ dual tyres
2.3 dCi [RWD] (UVOC, UVOD, HVOC, HVOD)	02/10→	74 / 101			92228600	ø 302 x 28 x 70					92228800	ø 305 x 12 x 71.5	⊕ single tyre
2.3 dCi [RWD] (UVOF, UVOE)	02/10→	107 / 146			TPM0004						92230800	ø 302 x 18 x 50.9	⊕ dual tyres
		597500	Bre		2514701	[+] 25147 18			Bos		2511201	[+] 25112 18.1	
2.3 dCi FWD (EVOA, EVOB, HVOA, HVOB, HVOG, UVOA, UVOB, UVOG)	02/10→	74 / 101	Bos		82076300						92228700	ø 305 x 12 x 71.5	
2.3 dCi FWD (EVOC, EVOD, EVOJ, HVOC, HVOD, HVOH, HVOJ...)	02/10→	92 / 125			92228600	ø 302 x 28 x 70					TPM0004		
2.3 dCi FWD (EVOE, EVOF, HVOE, HVOF, UVOE, UVOF)	02/10→	107 / 146			TPM0004								
MASTER III Pritsche/Fahrgestell (EV, HV, UV) 02/10→ → MASTER III Platform/Chassis (EV, HV, UV), Page 968														
MEGANE I (BA0/1_) 08/95→08/03														
		597600	Luc		2146306	[–] 21463 18.2			Ben		2097401	[o] 20974 11	⊕ rear disc brake
1.4 16V (BA0D, BA1H, BA0W, BA10)	03/99→08/03	70 / 95	Luc		2146304	[+] 21463 18.2			Ben		82029500		
			Luc		82062800		⊕ ABS				91049500	ø 203.2 x 39	⊕ rear drum brake
				PRO	92100903	ø 259 x 20.6 x 41			Bos		97012100		
											84049501	bore ø 19 ø 203.2 x 39	⊕ rear drum brake
											94019700	ø 203,3 x 50.5	⊕ rear drum brake
		597700	Luc		2146306	[–] 21463 18.2					91049500	ø 203.2 x 39	
1.4 e (BA0E, BA0V)	01/96→08/03	55 / 75	Luc		2146304	[+] 21463 18.2			Bos		97012100		

MEGANE I (BA0/1_) 08/95→08/03

		kW / hp										
1.4 e (BA0E, BA0V)	01/96→08/03	597700 55 / 75	Luc		82062800		⊕ ABS			84049500	bore ø 17.5 ø 203.2 x 39	
				PRO	92036103	ø 238 x 12 x 41	⊕ solid disc			94019700	ø 203,3 x 50.5	
				PRO	92036203	ø 238 x 20 x 41	⊕ vented disc					
				PRO	92100903	ø 259 x 20.6 x 41	⊕ vented disc					
1.4 Eco (BA0T)	01/96→03/99	597800 52 / 71	Luc		2146306	[–] 21463 18.2				91049500	ø 203.2 x 39	
			Luc		2146304	[+] 21463 18.2		Bos		97012100		
			Luc		82062800		⊕ ABS			84049500	bore ø 17.5 ø 203.2 x 39	
				PRO	92036103	ø 238 x 12 x 41	⊕ solid disc			94019700	ø 203,3 x 50.5	
				PRO	92036203	ø 238 x 20 x 41						
				PRO	92100903	ø 259 x 20.6 x 41						
1.6	02/00→09/00	597900 64 / 87	Luc		2146306	[–] 21463 18.2				91049500	ø 203.2 x 39	
1.6 e (BA0F, BA0S)	01/96→03/99	66 / 90										
1.6 i (BA0L)	01/96→03/99	55 / 75	Luc		2146304	[+] 21463 18.2		Bos		97012100		
1.6 LPG	08/95→03/99	66 / 90										
1.9 D Eco (B/SA0U, BA0A)	01/96→08/03	47 / 64	Luc		82062800		⊕ ABS			84049500	bore ø 17.5 ø 203.2 x 39	
				PRO	92036103	ø 238 x 12 x 41				94019700	ø 203,3 x 50.5	
				PRO	92036203	ø 238 x 20 x 41						
				PRO	92100903	ø 259 x 20.6 x 41						
1.6 16V (BA11, BA04, BA0B, BA1J)	03/99→08/03	598000 79 / 107	Luc		2146306	[–] 21463 18.2	Ø 259 mm	Ben		2097401	[o] 20974 11	⊕ rear disc brake
1.6 LPG	10/00→08/02	80 / 109	Luc		2317203	[–] 23172 18.3	Ø 280 mm	Ben		82029500		
			Luc		2146304	[+] 21463 18.2	Ø 259 mm			91049500	ø 203.2 x 39	⊕ rear drum brake
			Luc		82062800		⊕ ABS	Bos		97012100		
				PRO	92100903	ø 259 x 20.6 x 41	⊕ cyl. head			84049501	bore ø 19 ø 203.2 x 39	⊕ rear drum brake
				PRO	92113903	ø 280 x 24 x 44	⊕ countersunk head			94019700	ø 203,3 x 50.5	⊕ rear drum brake
1.8 16V (BA06, BA12, BA1A, BA1M, BA1R)	01/01→08/03	598100 85 / 115	Luc		2146306	[–] 21463 18.2	Ø 259 mm	Ben		2097401	[o] 20974 11	⊕ rear disc brake
1.9 DCi	03/99→08/03	77 / 105	Luc		2317203	[–] 23172 18.3	Ø 280 mm	Ben		82029500		
1.9 dCi (BA05, BA1F)	02/01→08/03	75 / 102										
1.9 DTi	02/00→09/00	60 / 82	Luc		2146304	[+] 21463 18.2	Ø 259 mm			91049500	ø 203.2 x 39	⊕ rear drum brake
1.9 dTi (BA1U)	02/01→08/03	59 / 80	Luc		82062800		⊕ ABS	Bos		97012100		
				PRO	92100903	ø 259 x 20.6 x 41	⊕ cyl. head			94019700	ø 203,3 x 50.5	⊕ rear drum brake
				PRO	92113903	ø 280 x 24 x 44	⊕ countersunk head					
1.9 D	04/96→02/01	598200 69 / 94	Luc		2146306	[–] 21463 18.2				91049500	ø 203.2 x 39	
1.9 dT (B/SA0K, B/SA0Y)	01/96→08/03	66 / 90										
1.9 TDI	09/96→08/03	69 / 94	Luc		2146304	[+] 21463 18.2		Bos		97012100		
2.0 i (BA0G)	01/96→08/03	84 / 114	Luc		82062800		⊕ ABS			84049500	bore ø 17.5 ø 203.2 x 39	
				PRO	92100903	ø 259 x 20.6 x 41				94019700	ø 203,3 x 50.5	
1.9 dTi (BA08, BA0N)	03/97→02/01	598300 72 / 98	Luc		2146306	[–] 21463 18.2	Ø 259 mm	Ben		2097401	[o] 20974 11	⊕ rear disc brake
			Luc		2317203	[–] 23172 18.3	Ø 280 mm	Ben		82029500		
			Luc		2146304	[+] 21463 18.2	Ø 259 mm			91049500	ø 203.2 x 39	⊕ rear drum brake
			Luc		82062800		⊕ ABS	Bos		97012100		
				PRO	92100903	ø 259 x 20.6 x 41	⊕ cyl. head			84049500	bore ø 17.5 ø 203.2 x 39	⊕ rear drum brake
				PRO	92113903	ø 280 x 24 x 44	⊕ countersunk head			94019700	ø 203,3 x 50.5	⊕ rear drum brake
2.0	05/98→05/01	598400 85 / 115	Luc		2146306	[–] 21463 18.2				84049500	bore ø 17.5 ø 203.2 x 39	
			Luc		2146304	[+] 21463 18.2				94019700	ø 203,3 x 50.5	

		kW / hp										
MEGANE I (BA0/1_) 08/95→08/03												
2.0	05/98→05/01	598400 85 / 115		PRO 92100903	ø 259 x 20.6 x 41							
				TPM0004								
2.0 16V (BA0H)	07/96→08/03	598500 108 / 147	Luc	2317203	[–] 23172 18.3	03/99→	Ben	2097401	[o] 20974 11			
			Gir	2138802	[+] 21388 18.3	→03/99	Ben	82029500				
			Luc	82062800		→03/99						
				PRO 92064803	ø 262 x 22 x 44							
2.0 i	03/99→08/03	598600 80 / 109	Luc	2146306	[–] 21463 18.2			91049500	ø 203.2 x 39			
			Luc	2146304	[+] 21463 18.2		Bos	97012100				
			Luc	82062800		⊕ ABS		94019700	ø 203,3 x 50.5			
				PRO 92100903	ø 259 x 20.6 x 41							
MEGANE I Break (KA0/1_) 03/99→08/03 → MEGANE I Grandtour (KA0/1_), Page 974												
MEGANE I Cabriolet (EA0/1_) 10/96→08/03												
1.4 16V (EA0D, EA1H, EA0W, EA10)	03/99→08/03	598700 70 / 95	Luc	2146306	[–] 21463 18.2	Ø 259 mm	Ben	2097401	[o] 20974 11	⊕ rear disc brake		
			Luc	2317203	[–] 23172 18.3	Ø 280 mm	Ben	82029500				
			Luc	2146304	[+] 21463 18.2	Ø 259 mm		91049500	ø 203.2 x 39	⊕ rear drum brake		
			Luc	82062800		⊕ ABS	Bos	97012100				
				PRO 92100903	ø 259 x 20.6 x 41			84049501	bore ø 19 ø 203.2 x 39	⊕ rear drum brake		
				PRO 92113903	ø 280 x 24 x 44			92070300	ø 238 x 8 x 74.6			
								94019700	ø 203,3 x 50.5	⊕ rear drum brake		
1.6 16V (EA0B, EA04, EA11)	03/99→08/03	598800 79 / 107	Luc	2317203	[–] 23172 18.3		Ben	2097401	[o] 20974 11	⊕ rear disc brake		
			Luc	82062800		⊕ ABS	Ben	82029500				
				PRO 92113903	ø 280 x 24 x 44			91049500	ø 203.2 x 39	⊕ rear drum brake		
							Bos	97012100				
								84049501	bore ø 19 ø 203.2 x 39	⊕ rear drum brake		
								92070300	ø 238 x 8 x 74.6			
								94019700	ø 203,3 x 50.5	⊕ rear drum brake		
1.6 e (EA0F)	10/96→03/99	598900 66 / 90	Luc	2146306	[–] 21463 18.2			91049500	ø 203.2 x 39			
			Luc	2146304	[+] 21463 18.2		Bos	97012100				
			Luc	82062800		⊕ ABS		84049500	bore ø 17.5 ø 203.2 x 39			
				PRO 92036203	ø 238 x 20 x 41	→10/97 ⊖ ABS 10/97→ →10/98		94019700	ø 203,3 x 50.5			
				PRO 92100903	ø 259 x 20.6 x 41	⊕ ABS 10/97→ →10/98 11/98→						
2.0 (EA0G)	04/97→08/03	599000 84 / 114	Luc	2146306	[–] 21463 18.2			91049500	ø 203.2 x 39			
2.0 i (EA0G)	03/99→08/03	80 / 109	Luc	2146304	[+] 21463 18.2		Bos	97012100				
			Luc	82062800		⊕ ABS		94019700	ø 203,3 x 50.5			
				PRO 92100903	ø 259 x 20.6 x 41							
2.0 16V 2.0 16V IDE (EA03, EA0P, EA14)	01/02→08/03 11/99→08/03	599100 102 / 139 103 / 140	Luc	2317203	[–] 23172 18.3		Ben	2097401	[o] 20974 11			
			Luc	82062800		⊕ ABS	Ben	82029500				
				PRO 92113903	ø 280 x 24 x 44			92070300	ø 238 x 8 x 74.6			
2.0 16V (EA0H)	10/96→11/99	599200 108 / 147	Luc	2317203	[–] 23172 18.3	03/99→	Ben	2097401	[o] 20974 11			
			Gir	2138802	[+] 21388 18.3	→03/99	Ben	82029500				

R-S

		kW / hp									
MEGANE I Cabriolet (EA0/1_) 10/96→08/03											
599200			Luc		82062800		→03/99		92070300	ø 238 x 8 x 74.6	
2.0 16V (EA0H)	10/96→11/99	108 / 147		PRO	92064803	ø 262 x 22 x 44	→03/99				
				PRO	92113903	ø 280 x 24 x 44	03/99→				
MEGANE I Classic (LA0/1_) 09/96→08/03											
599300			Luc		2146306	[–] 21463 18.2			91049500	ø 203.2 x 39	
1.4 (LA0E, LA0V)	09/96→08/03	55 / 75									
1.6 e (LA0F, LA0S)	09/96→03/99	66 / 90	Luc		2146304	[+] 21463 18.2		Bos	97012100		
1.6 i (LA0L)	09/96→03/99	55 / 75									
1.9 D (LA0A, LA0U)	09/96→08/03	47 / 64	Luc		82062800		⊕ ABS		84049500	bore ø 17.5 ø 203.2 x 39	
				PRO	92036103	ø 238 x 12 x 41			94019700	ø 203,3 x 50.5	
				PRO	92036203	ø 238 x 20 x 41					
				PRO	92100903	ø 259 x 20.6 x 41					
599400			Luc		2146306	[–] 21463 18.2		Ben	2097401	[o] 20974 11	⊕ rear disc brake
1.4 16V (LA0D, LA1H, IA0W, LA10)	03/99→08/03	70 / 95									
			Luc		2146304	[+] 21463 18.2		Ben	82029500		
			Luc		82062800		⊕ ABS		91049500	ø 203.2 x 39	⊕ rear drum brake
				PRO	92113903	ø 280 x 24 x 44		Bos	97012100		
									84049501	bore ø 19 ø 203.2 x 39	⊕ rear drum brake
									94019700	ø 203,3 x 50.5	⊕ rear drum brake
599500			Luc		2146306	[–] 21463 18.2			94019700	ø 203,3 x 50.5	
1.6	02/00→09/00	64 / 87	Luc		2146304	[+] 21463 18.2					
				PRO	92100903	ø 259 x 20.6 x 41					
					TPM0004						
599600			Luc		2146306	[–] 21463 18.2	Ø 259 mm	Ben	2097401	[o] 20974 11	⊕ rear disc brake
1.6 16V (LA04, LA11, LA0B, LA1C, LA1J)	03/99→08/03	79 / 107	Luc		2317203	[–] 23172 18.3	Ø 280 mm	Ben	82029500		
			Luc		2146304	[+] 21463 18.2	Ø 259 mm		91049500	ø 203.2 x 39	⊕ rear drum brake
			Luc		82062800		⊕ ABS	Bos	97012100		
				PRO	92100903	ø 259 x 20.6 x 41			84049501	bore ø 19 ø 203.2 x 39	⊕ rear drum brake
				PRO	92113903	ø 280 x 24 x 44			94019700	ø 203,3 x 50.5	⊕ rear drum brake
599700			Luc		2317203	[–] 23172 18.3		Ben	2097401	[o] 20974 11	
1.8 16V (LA06, LA12, LA1A, LA1M, LA1R)	01/01→08/03	85 / 115	Luc		82062800		⊕ ABS	Ben	82029500		
				PRO	92113903	ø 280 x 24 x 44			94019700	ø 203,3 x 50.5	
599800			Luc		2317203	[–] 23172 18.3		Ben	2097401	[o] 20974 11	⊕ rear disc brake
1.9 dCi	03/99→09/00	77 / 105									
1.9 dCi (LA05, LA1F)	02/01→08/03	75 / 102	Luc		82062800		⊕ ABS	Ben	82029500		
				PRO	92113903	ø 280 x 24 x 44			91049500	ø 203.2 x 39	⊕ rear drum brake
								Bos	97012100		
									94019700	ø 203,3 x 50.5	⊕ rear drum brake
599900			Luc		2146306	[–] 21463 18.2			91049500	ø 203.2 x 39	
1.9 dT (LA0K, LA0Y)	09/96→08/03	66 / 90									
1.9 TDI	09/96→08/03	69 / 94	Luc		2146304	[+] 21463 18.2		Bos	97012100		
			Luc		82062800		⊕ ABS		84049500	bore ø 17.5 ø 203.2 x 39	
				PRO	92100903	ø 259 x 20.6 x 41			94019700	ø 203,3 x 50.5	
600000			Luc		2317203	[–] 23172 18.3		Ben	2097401	[o] 20974 11	⊕ rear disc brake
1.9 dTi (LA08, LA0N)	03/97→02/01	72 / 98	Luc		82062800		⊕ ABS	Ben	82029500		

		kW / hp											
MEGANE I Classic (LA0/1_) 09/96→08/03													
1.9 dTi (LA08, LA0N)	03/97→02/01	600000 72 / 98		PRO	92113903	ø 280 x 24 x 44				91049500	ø 203.2 x 39	⊕ rear drum brake
								Bos		97012100		
										84049500	bore ø 17.5 ø 203.2 x 39	⊕ rear drum brake
										94019700	ø 203,3 x 50.5	⊕ rear drum brake
1.9 dTi (LA1U)	02/01→08/03	600100 59 / 80	Luc		2146306	[–] 21463 18.2		Ben		2097401	[o] 20974 11	⊕ rear disc brake
			Luc		2146304	[+] 21463 18.2		Ben		82029500		
			Luc		82062800		⊕ ABS			91049500	ø 203.2 x 39	⊕ rear drum brake
				PRO	92100903	ø 259 x 20.6 x 41		Bos		97012100		
										94019700	ø 203,3 x 50.5	⊕ rear drum brake
2.0	05/98→05/01	600200 85 / 115	Luc		2146306	[–] 21463 18.2				84049500	bore ø 17.5 ø 203.2 x 39	
			Luc		2146304	[+] 21463 18.2				94019700	ø 203,3 x 50.5	
				PRO	92100903	ø 259 x 20.6 x 41						
					TPM0004							
2.0 i (LA07, LA0G)	09/96→08/03	600300 84 / 114	Luc		2146306	[–] 21463 18.2	→03/99			91049500	ø 203.2 x 39	
			Luc		2317203	[–] 23172 18.3	04/99→	Bos		97012100		
			Luc		2146304	[+] 21463 18.2	→03/99			84049500	bore ø 17.5 ø 203.2 x 39	
			Luc		82062800					94019700	ø 203,3 x 50.5	
				PRO	92100903	ø 259 x 20.6 x 41	→03/99					
				PRO	92113903	ø 280 x 24 x 44	04/99→					
2.0 i (LA0G)	03/99→08/03	600400 80 / 109	Luc		2146306	[–] 21463 18.2	→03/99			91049500	ø 203.2 x 39	
			Luc		2317203	[–] 23172 18.3	04/99→	Bos		97012100		
			Luc		2146304	[+] 21463 18.2	→03/99			94019700	ø 203,3 x 50.5	
			Luc		82062800							
				PRO	92100903	ø 259 x 20.6 x 41	→03/99					
				PRO	92113903	ø 280 x 24 x 44	04/99→					
2.0 RT	10/96→02/99	600500 112 / 152	Luc		2146304	[+] 21463 18.2				91049500	ø 203.2 x 39	
			Luc		82062800		⊕ ABS	Bos		97012100		
				PRO	92100903	ø 259 x 20.6 x 41				94019700	ø 203,3 x 50.5	
2.0 RT	03/01→08/03	600600 103 / 140	Gir		2138802	[+] 21388 18.3		Ben		2097401	[o] 20974 11	
				PRO	92113903	ø 280 x 24 x 44			ABS	92154000	ø 238 x 8 x 74.6	
					TPM0004							
MEGANE I Coach (DA0/1_) 03/96→08/03												
1.4 16V (DA0D, DA1H, DA0W, DA10)	03/99→08/03	600700 70 / 95	Luc		2146306	[–] 21463 18.2	→09/00	Ben		2097401	[o] 20974 11	⊕ rear disc brake
			Luc		2317203	[–] 23172 18.3	09/00→	Ben		82029500		
			Luc		2146304	[+] 21463 18.2	→09/00			91049500	ø 203.2 x 39	⊕ rear drum brake
			Luc		82062800		⊕ ABS	Bos		97012100		
				PRO	92100903	ø 259 x 20.6 x 41	→09/00			84049501	bore ø 19 ø 203.2 x 39	⊕ rear drum brake
				PRO	92113903	ø 280 x 24 x 44	09/00→			92070300	ø 238 x 8 x 74.6	
										94019700	ø 203,3 x 50.5	⊕ rear drum brake
1.6 16V (DA0B, DA04, DA11)	03/99→08/03	600800 79 / 107	Luc		2317203	[–] 23172 18.3		Ben		2097401	[o] 20974 11	⊕ rear disc brake

kW / hp

MEGANE I Coach (DA0/1_) 03/96→08/03

600800 1.6 16V (DA0B, DA04, DA11)	03/99→08/03	79 / 107	Luc		82062800		⊕ ABS	Ben		82029500		
				PRO	92113903	ø 280 x 24 x 44				91049500	ø 203.2 x 39	⊕ rear drum brake
								Bos		97012100		
										84049501	bore ø 19 ø 203.2 x 39	⊕ rear drum brake
										92070300	ø 238 x 8 x 74.6	
										94019700	ø 203,3 x 50.5	⊕ rear drum brake
600900 1.6 e (DA0F)	03/96→03/99	66 / 90	Luc		2146306	[–] 21463 18.2				91049500	ø 203.2 x 39	
			Luc		2146304	[+] 21463 18.2		Bos		97012100		
			Luc		82062800		⊕ ABS			84049500	bore ø 17.5 ø 203.2 x 39	
				PRO	92036203	ø 238 x 20 x 41	→10/97 ⊖ ABS 10/97→ →10/98			94019700	ø 203,3 x 50.5	
				PRO	92100903	ø 259 x 20.6 x 41	⊕ ABS 10/97→ →10/98 11/98→					
601000 1.9 DCi 1.9 dCi (DA05, DA1F)	03/99→09/00 02/01→08/03	77 / 105 75 / 102	Luc		2317203	[–] 23172 18.3	280399→			91049500	ø 203.2 x 39	
			Gir		2138802	[+] 21388 18.3	→280399	Bos		97012100		
			Luc		82062800					94019700	ø 203,3 x 50.5	
				PRO	92113903	ø 280 x 24 x 44						
601100 1.9 dTi (DA0N)	03/97→02/01	72 / 98	Luc		2146306	[–] 21463 18.2	→03/99			91049500	ø 203.2 x 39	
			Luc		2317203	[–] 23172 18.3	280399→	Bos		97012100		
			Gir		2138802	[+] 21388 18.3	03/99→ →280399			84049500	bore ø 17.5 ø 203.2 x 39	
			Luc		2146304	[+] 21463 18.2	→03/99			94019700	ø 203,3 x 50.5	
			Luc		82062800							
				PRO	92100903	ø 259 x 20.6 x 41	→03/99					
				PRO	92113903	ø 280 x 24 x 44	03/99→					
601200 2.0 16V 2.0 16V IDE (DA03, DA0P, DA14)	01/02→08/03 11/99→08/03	102 / 139 103 / 140	Luc		2317203	[–] 23172 18.3		Ben		2097401	[o] 20974 11	
			Luc		82062800		⊕ ABS	Ben		82029500		
				PRO	92113903	ø 280 x 24 x 44				92070300	ø 238 x 8 x 74.6	
601300 2.0 16V (DA0H)	03/96→11/99	108 / 147	Luc		2317203	[–] 23172 18.3	03/99→	Ben		2097401	[o] 20974 11	
			Gir		2138802	[+] 21388 18.3	→03/99	Ben		82029500		
			Luc		82062800					92070300	ø 238 x 8 x 74.6	
				PRO	92064803	ø 262 x 22 x 44	→03/99					
				PRO	92113903	ø 280 x 24 x 44	03/99→					
601400 2.0 i	03/99→08/03	80 / 109	Luc		2146306	[–] 21463 18.2				91049500	ø 203.2 x 39	
			Luc		2146304	[+] 21463 18.2		Bos		97012100		
			Luc		82062800		⊕ ABS			84049500	bore ø 17.5 ø 203.2 x 39	
				PRO	92100903	ø 259 x 20.6 x 41				94019700	ø 203,3 x 50.5	
601500 2.0 i (DA0G)	03/96→08/03	84 / 114	Luc		2146306	[–] 21463 18.2				91049500	ø 203.2 x 39	
			Luc		2146304	[+] 21463 18.2		Bos		97012100		
			Luc		82062800		⊕ ABS			94019700	ø 203,3 x 50.5	
				PRO	92100903	ø 259 x 20.6 x 41						

MEGANE I Coupé (DA0/1_) 03/96→08/03 → MEGANE I Coach (DA0/1_), Page 972

R - S

MEGANE I Grandtour (KA0/1_) 03/99→08/03

		kW / hp											
1.4 16V (KA0D, KA1H, KA0W, KA10)	03/99→08/03	601600 70 / 95	Luc		2146306	[–] 21463 18.2		Luc		2355401	[–] 23554 15.2	⊕ rear disc brake
			Luc		2146304	[+] 21463 18.2		Luc	epad	2355482	[–] 23554 15.2	⊕ rear disc brake
			Luc		82062800		⊕ ABS	Luc		82037300		
				PRO	92100903	ø 259 x 20.6 x 41		Luc		82063300		
										91050000	ø 228.6 x 41.5	⊕ rear drum brake
								Bos		97012100		
										84050000	bore ø 20.6 ø 228.6 x 41.5	⊕ rear drum brake
									PRO	92141403	ø 274 x 11 x 82.2	⊕ rear disc brake
										94013700	ø 228,6 x 52.5	⊕ rear drum brake
		601700										
1.4 e (KA0V)	03/99→08/03	55 / 75								91050000	ø 228.6 x 41.5	
1.6 e (KA0F)	03/99→08/03	66 / 90										
1.9 D (KA0J, KA0R)	04/99→08/03	47 / 64	Luc		2146306	[–] 21463 18.2		Bos		97012100		
			Luc		2146304	[+] 21463 18.2						
			Luc		82062800		⊕ ABS			84050000	bore ø 20.6 ø 228.6 x 41.5	
				PRO	92100903	ø 259 x 20.6 x 41				94013700	ø 228,6 x 52.5	
		601800										
1.6 16V (KA0B, KA04, KA11)	03/99→08/03	79 / 107	Luc		2317203	[–] 23172 18.3		Luc		2355401	[–] 23554 15.2	⊕ rear disc brake
1.9 dTi (KA0N)	03/99→02/01	72 / 98	Gir		2138802	[+] 21388 18.3	→03/99	Luc	epad	2355482	[–] 23554 15.2	⊕ rear disc brake
			Luc		82062800		→03/99	Luc		82037300		
				PRO	92113903	ø 280 x 24 x 44		Luc		82063300		
										91050000	ø 228.6 x 41.5	⊕ rear drum brake
								Bos		97012100		
										84050000	bore ø 20.6 ø 228.6 x 41.5	⊕ rear drum brake
									PRO	92141403	ø 274 x 11 x 82.2	⊕ rear disc brake
										94013700	ø 228,6 x 52.5	⊕ rear drum brake
		601900										
1.6 Bifuel	03/99→09/00	80 / 109	Luc		2317203	[–] 23172 18.3		Luc		2355401	[–] 23554 15.2	⊕ rear disc brake
			Gir		2138802	[+] 21388 18.3		Luc	epad	2355482	[–] 23554 15.2	⊕ rear disc brake
				PRO	92113903	ø 280 x 24 x 44				91050000	ø 228.6 x 41.5	⊕ rear drum brake
					TPM0004					84050000	bore ø 20.6 ø 228.6 x 41.5	⊕ rear drum brake
									PRO	92141403	ø 274 x 11 x 82.2	⊕ rear disc brake
										94013700	ø 228,6 x 52.5	⊕ rear drum brake
		602000										
1.6 Bifuel	04/01→07/03	79 / 107	Luc		2317203	[–] 23172 18.3		Luc		2355401	[–] 23554 15.2	⊕ rear disc brake
				PRO	92113903	ø 280 x 24 x 44		Luc	epad	2355482	[–] 23554 15.2	⊕ rear disc brake
					TPM0004					91050000	ø 228.6 x 41.5	⊕ rear drum brake
									PRO	92141403	ø 274 x 11 x 82.2	⊕ rear disc brake
										94013700	ø 228,6 x 52.5	⊕ rear drum brake
		602100										
1.8 16V (KA0S, KA12, KA1A, KA1M, KA1R)	01/01→08/03	85 / 115	Luc		2317203	[–] 23172 18.3		Luc		2355401	[–] 23554 15.2	⊕ rear disc brake
1.9 dCi	03/99→09/00	77 / 105	Luc		82062800		⊕ ABS	Luc	epad	2355482	[–] 23554 15.2	⊕ rear disc brake
1.9 dCi (KA05, KA1F)	02/01→08/03	75 / 102										
1.9 dTi (KA1U)	02/01→08/03	59 / 80		PRO	92113903	ø 280 x 24 x 44		Luc		82037300		
								Luc		82063300		
										91050000	ø 228.6 x 41.5	⊕ rear drum brake
								Bos		97012100		
									PRO	92141403	ø 274 x 11 x 82.2	⊕ rear disc brake

		kW / hp											
MEGANE I Grandtour (KA0/1_) 03/99→08/03													
		602100											
1.8 16V (KA0S, KA12, KA1A, KA1M, KA1R)	01/01→08/03	85 / 115									94013700	ø 228,6 x 52.5	⊕ rear drum brake
1.9 dCi	03/99→09/00	77 / 105											
1.9 dCi (KA05, KA1F)	02/01→08/03	75 / 102											
1.9 dTi (KA1U)	02/01→08/03	59 / 80											
MEGANE II (BM0/1_, CM0/1_) 11/02→													
		602200	Bos		2393401	[–] 23934 18.1		Luc		2355406	[–] 23554 16.2		
1.4 16V	10/03→	60 / 82											
1.4 16V (BM0B, CM0B)	11/02→	72 / 98		PRO	92119203	ø 260 x 22 x 44			ABS	92154400	ø 240 x 8 x 80.8		
					TPM0004								
		602300	Bos		2393001	[–] 23930 18.1	→2005-10	Luc		2355406	[–] 23554 16.2		
1.5 dCi	10/03→	74 / 101	Ate		2453501	[–] 24535 18.3	2005-10→		ABS	92154400	ø 240 x 8 x 80.8		
			Ate		82032100								
				PRO	92113903	ø 280 x 24 x 44							
					TPM0004								
		602400	Bos		2393001	[–] 23930 18.1	→10/05	Luc		2355406	[–] 23554 16.2		
1.5 dCi	05/05→	63 / 86											
1.5 dCi (BM0F, CM0F)	11/02→	60 / 82	Ate		2453501	[–] 24535 18.3	10/05→		ABS	92154400	ø 240 x 8 x 80.8		
1.6	06/05→	77 / 105											
1.6 16V (BM0C, CM0C)	11/02→	83 / 113											
1.9 dCi	11/02→	85 / 115	Ate		82032100								
1.9 dCi	11/02→12/05	66 / 90											
1.9 dCi	03/04→	68 / 92		PRO	92113903	ø 280 x 24 x 44							
1.9 dCi	05/05→	81 / 110											
1.9 dCi	05/05→	96 / 131											
1.9 dCi (BM0G, CM0G)	11/02→	88 / 120			TPM0004								
2.0 16V (BM0U, CM0U)	11/02→	99 / 135											
2.0 16V Turbo	05/04→	120 / 163											
		602500	Ate		2453501	[–] 24535 18.3		Luc		2355406	[–] 23554 16.2		
1.5 dCi	05/05→	78 / 106											
1.5 dCi	01/07→	76 / 103	Ate		82032100				ABS	92154400	ø 240 x 8 x 80.8		
1.6	05/06→01/11	79 / 107											
1.6 16V	01/06→	82 / 112		PRO	92113903	ø 280 x 24 x 44							
1.6 Bifuel	06/05→02/08	77 / 105											
1.6 Flex	03/06→01/11	81 / 110			TPM0004								
1.6 Flex-Fuel	01/07→	77 / 105											
2.0	06/06→12/10	102 / 138											
		602600	Bre		2416201	[–] 24162 15.3		Luc		2355406	[–] 23554 16.2		
2.0	08/06→	169 / 230											
2.0 Renault Sport	05/04→	165 / 224			92167700	ø 312 x 28 x 63			ABS	92239600	ø 300 x 11 x 103		
					TPM0004								
		602700	Bre		2416201	[–] 24162 15.3		Luc		2355406	[–] 23554 16.2		
2.0 dCi	01/07→	127 / 173			92167700	ø 312 x 28 x 63							
					TPM0004								
		602800	Bos		2393001	[–] 23930 18.1	→10/05	Luc		2355406	[–] 23554 16.2		
2.0 dCi (BM1K, CM1K)	09/05→	110 / 150	Ate		2453501	[–] 24535 18.3	10/05→						
			Ate		82032100								
				PRO	92196803	ø 280 x 24 x 44							
					TPM0004								
MEGANE II Coupé-Cabriolet (EM0/1_) 09/03→													
		602900	Ate		2453501	[–] 24535 18.3		Luc		2355406	[–] 23554 16.2		
1.5 dCi (EM16)	01/07→	76 / 103											
1.5 dCi (EM1E)	03/06→	78 / 106	Ate		82032100				ABS	92154400	ø 240 x 8 x 80.8		
1.6 16V	01/06→	82 / 112											
				PRO	92113903	ø 280 x 24 x 44							
					TPM0004								
		603000	Bos		2393001	[–] 23930 18.1	→2005-10	Luc		2355406	[–] 23554 16.2		
1.6	09/03→	83 / 113											
1.9 dCi	09/03→	85 / 115	Ate		2453501	[–] 24535 18.3	2005-10→		ABS	92154400	ø 240 x 8 x 80.8		
1.9 dCi	09/03→	88 / 120											
1.9 dCi	05/05→	81 / 110											
1.9 dCi	05/05→	96 / 131		PRO	92113903	ø 280 x 24 x 44							
2.0	09/03→02/07	102 / 139											
2.0 16V Turbo	05/04→	120 / 163			TPM0004								

MEGANE II Coupé-Cabriolet (EM0/1_) 09/03→

1.6	06/05→	603100 77 / 105	Bos	2393001	[–] 23930	18.1	→2005-10	Luc	2355406	[–] 23554	16.2
			Ate	2453501	[–] 24535	18.3	2005-10→		92154400	ø 240 x 8 x 80.8	
			Ate	82032100							
				92113903	ø 280 x 24 x 44						
				TPM0004							
2.0	09/03→	603200 99 / 135	Bos	2393001	[–] 23930	18.1	→2005-10	Luc	2355406	[–] 23554	16.2
			Ate	2453501	[–] 24535	18.3	2005-10→		92154400	ø 240 x 8 x 80.8	
			Ate	82032100			2005-10→				
				92113903	ø 280 x 24 x 44						
				TPM0004							
2.0 dCi	09/05→	603300 110 / 150	Bos	2393001	[–] 23930	18.1	→2005-10	Luc	2355406	[–] 23554	16.2
			Ate	2453501	[–] 24535	18.3	2005-10→				
				92196803	ø 280 x 24 x 44						
				TPM0004							

MEGANE II Estate (KM0/1_) 08/03→01/11

1.4	08/03→	603400 72 / 98	Bos	2393001	[–] 23930	18.1	→2005-10	Luc	2355406	[–] 23554	16.2
1.5 dCi	08/03→	60 / 82	Ate	2453501	[–] 24535	18.3	2005-10→		92154500	ø 270 x 10 x 82	
1.5 dCi	02/04→	74 / 101									
1.5 dCi	05/05→	63 / 86									
1.5 dCi (KM16, KM1E)	05/05→	78 / 106		92113903	ø 280 x 24 x 44						
1.6 16V	05/05→07/09	77 / 105									
2.0	08/03→	99 / 135		TPM0004							
1.5 dCi (KM13)	01/07→	603500 76 / 103	Ate	2453501	[–] 24535	18.3		Luc	2355406	[–] 23554	16.2
1.6 16V	01/06→	82 / 112	Ate	82032100					92154500	ø 270 x 10 x 82	
1.6 16V Hi-Flex	02/08→	77 / 105									
1.6 Flex	12/06→08/12	81 / 110		92113903	ø 280 x 24 x 44						
				TPM0004							
1.6	08/03→	603600 83 / 113	Bos	2393001	[–] 23930	18.1	→2005-10	Luc	2355406	[–] 23554	16.2
1.9 dCi	03/04→	68 / 92	Ate	2453501	[–] 24535	18.3	2005-10→		92154500	ø 270 x 10 x 82	
1.9 dCi	04/04→12/05	66 / 90									
1.9 dCi	05/05→	81 / 110									
1.9 dCi	05/05→	85 / 115	Ate	82032100							
1.9 dCi	05/05→	96 / 131									
				92113903	ø 280 x 24 x 44						
				TPM0004							
1.6 16V	05/05→07/09	603700 75 / 102	Bos	2393001	[–] 23930	18.1		Luc	2355406	[–] 23554	16.2
				92113903	ø 280 x 24 x 44				92154500	ø 270 x 10 x 82	
				TPM0004							
1.9 dCi	08/03→	603800 88 / 120	Bos	2393001	[–] 23930	18.1	Bosch	Luc	2355406	[–] 23554	16.2
			Ate	2453501	[–] 24535	18.3	Teves		92154500	ø 270 x 10 x 82	
			Ate	82032100							
				92113903	ø 280 x 24 x 44						
				TPM0004							
2.0	12/06→01/11	603900 102 / 138	Ate	2453501	[–] 24535	18.3		Luc	2355406	[–] 23554	16.2
			Ate	82032100							
				92113903	ø 280 x 24 x 44						
				TPM0004							

R - S

		kW / hp												
MEGANE II Estate (KM0/1_) 08/03→01/11														
		604000	Bos		2393001	[–] 23930 18.1	→2005-10		Luc		2355406	[–] 23554 16.2	
2.0 dCi	09/05→	110 / 150	Ate		2453501	[–] 24535 18.3	2005-10→						
				PRO	92196803	ø 280 x 24 x 44							
MEGANE II Grandtour (KM0/1_) 08/03→01/11 → MEGANE II Estate (KM0/1_), Page 976														
MEGANE II Kombi (KM0/1_) 08/03→01/11 → MEGANE II Estate (KM0/1_), Page 976														
MEGANE II Saloon (LM0/1_) 09/03→														
		604100	Bos		2393401	[–] 23934 18.1			Luc		2355406	[–] 23554 16.2	
1.4	09/03→	60 / 82											
1.4	09/03→	72 / 98		PRO	92119203	ø 260 x 22 x 44				ABS	92154400	ø 240 x 8 x 80.8	
					TPM0004								
		604200	Bos		2393001	[–] 23930 18.1	→2005-10		Luc		2355406	[–] 23554 16.2	
1.5 dCi	09/03→	60 / 82											
1.5 dCi	02/04→	74 / 101	Ate		2453501	[–] 24535 18.3	2005-10→			ABS	92154400	ø 240 x 8 x 80.8	
1.5 dCi	05/05→	63 / 86											
1.5 dCi	05/05→	78 / 106											
1.9 dCi	09/03→12/05	66 / 90		PRO	92113903	ø 280 x 24 x 44							
1.9 dCi	03/04→	68 / 92											
1.9 dCi	05/05→	96 / 131											
1.9 dCi (LM0G, LM1G, LM2C)	09/03→	88 / 120			TPM0004								
1.9 dCi (LM14, LM1D)	05/05→	81 / 110											
		604300	Ate		2453501	[–] 24535 18.3			Luc		2355406	[–] 23554 16.2	
1.5 dCi	01/07→	76 / 103											
1.6	09/07→12/10	80 / 109	Ate		82032100					ABS	92154400	ø 240 x 8 x 80.8	
1.6 16V	01/06→	82 / 112											
1.6 16V	05/06→01/11	79 / 107		PRO	92113903	ø 280 x 24 x 44							
1.6 Bifuel	01/06→12/07	77 / 105											
1.6 Hi-Flex	03/06→	85 / 116			TPM0004								
		604400	Bos		2393001	[–] 23930 18.1	→2005-10		Luc		2355406	[–] 23554 16.2	
1.6	09/03→	75 / 102											
2.0	09/03→	99 / 135	Ate		2453501	[–] 24535 18.3	2005-10→						
			Ate		82032100								
				PRO	92113903	ø 280 x 24 x 44							
					TPM0004								
		604500	Bos		2393001	[–] 23930 18.1			Luc		2355406	[–] 23554 16.2	
1.6	09/03→	83 / 113											
1.6	09/03→11/08	81 / 110		PRO	92113903	ø 280 x 24 x 44				ABS	92154400	ø 240 x 8 x 80.8	
					TPM0004								
		604600	Ate		2453501	[–] 24535 18.3			Luc		2355406	[–] 23554 16.2	
1.6	05/05→	77 / 105											
2.0	09/03→12/10	110 / 150	Ate		82032100								
				PRO	92113903	ø 280 x 24 x 44							
					TPM0004								
		604700	Bos		2393001	[–] 23930 18.1	→2005-10		Luc		2355406	[–] 23554 16.2	
2.0 dCi	09/05→	110 / 150	Ate		2453501	[–] 24535 18.3	2005-10→						
				PRO	92196803	ø 280 x 24 x 44							
					TPM0004								
MEGANE II Sport Tourer (KM0/1_) 08/03→01/11 → MEGANE II Estate (KM0/1_), Page 976														
MEGANE II Stufenheck (LM0/1_) 09/03→ → MEGANE II Saloon (LM0/1_), Page 977														
MEGANE III Coupe (DZ0/1_) 11/08→														
		604800		PRO	92195503	ø 280 x 24 x 44			Luc		2355406	[–] 23554 16.2	⊖ elect. handbr.
1.2 TCe	03/12→	85 / 116			TPM0004				Bos		2482001	[–] 24820 15.7	⊕ elect. handbr.
											82076200		⊕ elect. handbr.
									Luc		82503100		⊖ elect. handbr.
										ABS	92196000	ø 260 x 8 x 89	

		kW / hp											
MEGANE III Coupe (DZ0/1_) 11/08→													
		604900	Ate		2491401	[–] 24914 18		Luc		2355406	[–] 23554 16.2	⊖ elect. handbr.
1.2 TCe (DZ16)	01/13→	97 / 132	Ate		82032000			Bos		2482001	[–] 24820 15.7	⊕ elect. handbr.
				PRO	92195503	ø 280 x 24 x 44				82076200		⊕ elect. handbr.
					TPM0004				ABS	92196000	ø 260 x 8 x 89	
		605000	Ate		2491401	[–] 24914 18		Luc		2355406	[–] 23554 16.2	⊖ elect. handbr.
1.4 TCe (DZ0F, DZ1V)	04/09→	96 / 131										
1.5 dCi (DZ09, DZ0D, DZ1F, DZ1G)	02/09→	81 / 110	Ate		82032000			Bos		2482001	[–] 24820 15.7	⊕ elect. handbr.
1.5 dCi (DZ0A)	11/08→	63 / 86										
1.5 dCi (DZ0B)	02/09→	78 / 106	Ate		82062900					82076200		⊕ elect. handbr.
1.5 dCi (DZ0C, DZ1A)	11/08→	66 / 90										
1.6 16V (DZ0H)	11/08→	74 / 101		PRO	92195503	ø 280 x 24 x 44		Luc		82503100		⊖ elect. handbr.
1.6 16V (DZ0U, DZ1B, DZ1H)	11/08→	81 / 110										
1.6 16V Bifuel (DZ03, DZ1Y)	11/08→	81 / 110			TPM0004				ABS	92196000	ø 260 x 8 x 89	
1.9 dCi (DZ0N, DZ0J, DZ1J, DZ1K)	11/08→	96 / 131										
2.0 CVT (DZ0G, DZ1E)	05/09→	103 / 140										
		605100	Ate		2491401	[–] 24914 18		Luc		2355406	[–] 23554 16.2	⊖ elect. handbr.
1.6 dCi (DZ00)	04/11→	96 / 130	Ate		82032000			Bos		2482001	[–] 24820 15.7	⊕ elect. handbr.
			Ate		82062900					82076200		⊕ elect. handbr.
				PRO	92195503	ø 280 x 24 x 44		Luc		82503100		⊖ elect. handbr.
					TPM0004							
		605200	Ate		2471001	[–] 24710 18		Luc		2355406	[–] 23554 16.2	⊖ elect. handbr.
2.0 dCi	07/12→	120 / 163										
2.0 dCi (DZ0L)	04/09→	118 / 160	Ate		82062900			Bos		2482001	[–] 24820 15.7	⊕ elect. handbr.
2.0 dCi (DZ0Y)	04/09→	110 / 150										
2.0 TCe (DZ0K)	11/08→	132 / 180		PRO	92195603	ø 296 x 26 x 43.9				82076200		⊕ elect. handbr.
					TPM0004			Luc		82503100		⊖ elect. handbr.
									ABS	92196000	ø 260 x 8 x 89	
		605300	Bre		2309203	[–] 23092 16		Luc		2355406	[–] 23554 16.2	⊖ elect. handbr.
2.0 R.S.	11/08→	195 / 265										
2.0 TCe (DZ1N)	05/09→	184 / 250			TPM0004			Bos		2482001	[–] 24820 15.7	⊕ elect. handbr.
										82076200		⊕ elect. handbr.
								Luc		82503100		⊖ elect. handbr.
		605400	Ate		2471001	[–] 24710 18		Luc		2355406	[–] 23554 16.2	⊖ elect. handbr.
2.0 TCe	06/12→	140 / 190	Ate		82076800			Bos		2482001	[–] 24820 15.7	⊕ elect. handbr.
				PRO	92195603	ø 296 x 26 x 43.9				82076200		⊕ elect. handbr.
									ABS	92196000	ø 260 x 8 x 89	
		605500	Bre		2416201	[–] 24162 15.3		Luc		2355406	[–] 23554 16.2	⊖ elect. handbr.
2.0 TCe 220	11/13→	162 / 220			TPM0004			Bos		2482001	[–] 24820 15.7	⊕ elect. handbr.
										82076200		⊕ elect. handbr.
MEGANE III Grandtour (KZ0/1) 11/08→												
		605600	Ate		2491401	[–] 24914 18		Luc		2355406	[–] 23554 16.2	⊖ elect. handbr.
1.2 TCe	03/12→	85 / 116		PRO	92195503	ø 280 x 24 x 44		Bos		2482001	[–] 24820 15.7	⊕ elect. handbr.
					TPM0004					82076200		⊕ elect. handbr.
								Luc		82503100		⊖ elect. handbr.
									ABS	92196000	ø 260 x 8 x 89	
		605700	Ate		2491401	[–] 24914 18		Luc		2355406	[–] 23554 16.2	⊖ elect. handbr.
1.2 TCe (KZ16)	01/13→	97 / 132										
1.5 dCi	03/09→	63 / 86	Ate		82032000			Bos		2482001	[–] 24820 15.7	⊕ elect. handbr.
1.5 dCi	11/13→	70 / 95		PRO	92195503	ø 280 x 24 x 44				82076200		⊕ elect. handbr.
					TPM0004				ABS	92195900	ø 260 x 8 x 88.1	

		kW / hp											
MEGANE III Grandtour (KZ0/1) 11/08→													
		605800	Ate		2491401	[–] 24914 18		Luc		2355406	[–] 23554 16.2	⊖ elect. handbr.
1.4 TCe (KZ0F, KZ1V)	05/09→	96 / 130	Ate		82032000			Bos		2482001	[–] 24820 15.7	⊕ elect. handbr.
				PRO	92195503	ø 280 x 24 x 44				82076200		⊕ elect. handbr.
					TPM0004			Luc		82503100		⊖ elect. handbr.
									ABS	92195900	ø 260 x 8 x 88.1	
		605900	Ate		2491401	[–] 24914 18		Luc		2355406	[–] 23554 16.2	⊖ elect. handbr.
1.5 dCi (KZ09, KZ0D, KZ1G, KZ1M, KZ1W)	02/09→	81 / 110	Ate		82032000			Bos		2482001	[–] 24820 15.7	⊕ elect. handbr.
1.5 dCi (KZ0C, KZ1A)	05/09→	66 / 90										
1.5 dCi (KZ1M, KZ1W)	02/09→	78 / 106	Ate		82062900					82076200		⊕ elect. handbr.
1.6 16V (KZ0H)	05/09→	74 / 101						Luc		82503100		⊖ elect. handbr.
1.6 16V (KZ0U, KZ1B, KZ1U)	05/09→	81 / 110		PRO	92195503	ø 280 x 24 x 44						
1.6 16V Bifuel (KZ03)	11/08→	81 / 110							ABS	92195900	ø 260 x 8 x 88.1	
1.9 dCi (KZ0J, KZ0N, KZ1S)	05/09→	96 / 131										
2.0 CVT (KZ0G, KZ1P)	05/09→	103 / 140			TPM0004							
		606000	Ate		2491401	[–] 24914 18		Luc		2355406	[–] 23554 16.2	⊖ elect. handbr.
1.6 dCi (KZ00, KZ12)	04/11→	96 / 130	Ate		82032000			Bos		2482001	[–] 24820 15.7	⊕ elect. handbr.
			Ate		82062900					82076200		⊕ elect. handbr.
				PRO	92195503	ø 280 x 24 x 44		Luc		82503100		⊖ elect. handbr.
					TPM0004				ABS	92195900	ø 260 x 8 x 88.1	
		606100	Ate		2471001	[–] 24710 18		Luc		2355406	[–] 23554 16.2	⊖ elect. handbr.
2.0 dCi	07/12→	120 / 163										
2.0 dCi (KZ0L)	04/09→	118 / 160	Ate		82062900			Bos		2482001	[–] 24820 15.7	⊕ elect. handbr.
2.0 TCe (KZ0K, KZ1T)	11/08→	132 / 180		PRO	92195603	ø 296 x 26 x 43.9				82076200		⊕ elect. handbr.
					TPM0004			Luc		82503100		⊖ elect. handbr.
									ABS	92195900	ø 260 x 8 x 88.1	
		606200	Ate		2471001	[–] 24710 18		Luc		2355406	[–] 23554 16.2	⊖ elect. handbr.
2.0 dCi (KZ0Y)	10/10→	110 / 150	Ate		82062900			Bos		2482001	[–] 24820 15.7	⊕ elect. handbr.
			Ate		82076800					82076200		⊕ elect. handbr.
				PRO	92195603	ø 296 x 26 x 43.9		Luc		82503100		⊖ elect. handbr.
					TPM0004				ABS	92195900	ø 260 x 8 x 88.1	
		606300	Ate		2471001	[–] 24710 18		Luc		2355406	[–] 23554 16.2	⊕ elect. handbr.
2.0 TCe	09/12→	140 / 190	Ate		82076800			Bos		2482001	[–] 24820 15.7	⊖ elect. handbr.
				PRO	92195603	ø 296 x 26 x 43.9				82076200		⊕ elect. handbr.
					TPM0004				ABS	92195900	ø 260 x 8 x 88.1	
		606400	Ate		2491401	[–] 24914 18		Luc		2355406	[–] 23554 16.2	⊖ elect. handbr.
2.0 TCe	09/12→	162 / 220	Ate		82032000			Bos		2482001	[–] 24820 15.7	⊕ elect. handbr. →2014-02
				PRO	92195403	ø 320 x 28 x 44				82076200		⊕ elect. handbr.
					TPM0004				ABS	92195900	ø 260 x 8 x 88.1	
MEGANE III Hatchback (BZ0_) 11/08→													
		606500	Ate		2491401	[–] 24914 18		Luc		2355406	[–] 23554 16.2	⊖ elect. handbr.
1.2 TCe	03/12→	85 / 116										
1.4 TCe (BZ0F, BZ1V)	04/09→	96 / 131		PRO	92195503	ø 280 x 24 x 44		Bos		2482001	[–] 24820 15.7	⊕ elect. handbr.
1.6 TCe	01/11→	96 / 131										
					TPM0004					82076200		⊕ elect. handbr.
								Luc		82503100		⊖ elect. handbr.
									ABS	92196000	ø 260 x 8 x 89	
		606600	Ate		2491401	[–] 24914 18		Luc		2355406	[–] 23554 16.2	⊖ elect. handbr.
1.2 TCe (BZ16)	01/13→	97 / 132										
1.5 dCi	11/13→	70 / 95										

R - S

		kW / hp											
MEGANE III Hatchback (BZ0_) 11/08→													
		606600	Ate		**82032000**			Bos		**2482001**	[–] 24820 15.7	⊕ elect. handbr.
1.2 TCe (BZ16)	01/13→	97 / 132		PRO	**92195503**	ø 280 x 24 x 44				**82076200**		⊕ elect. handbr.
1.5 dCi	11/13→	70 / 95			**TPM0004**				ABS	**92196000**	ø 260 x 8 x 89	
		606700	Ate		**2491401**	[–] 24914 18		Luc		**2355406**	[–] 23554 16.2	⊖ elect. handbr.
1.5 dCi	02/09→	78 / 106										
1.5 dCi	12/09→	63 / 86	Ate		**82032000**			Bos		**2482001**	[–] 24820 15.7	⊕ elect. handbr.
1.5 dCi (BZ09, BZ0D)	02/09→	81 / 110										
1.5 dCi (BZ0C)	11/08→	66 / 90	Ate		**82062900**					**82076200**		⊕ elect. handbr.
1.6 16V	11/08→	82 / 111										
1.6 16V (BZ0H)	11/08→	74 / 101		PRO	**92195503**	ø 280 x 24 x 44		Luc		**82503100**		⊖ elect. handbr.
1.6 16V (BZ1B, BZ1H)	11/08→	81 / 110										
1.6 16V Bifuel (BZ03)	11/08→	81 / 110			**TPM0004**				ABS	**92196000**	ø 260 x 8 x 89	
1.9 dCi (BZ0N, BZ0J)	11/08→	96 / 131										
2.0	01/11→	105 / 143										
2.0 CVT (BZ0G, BZ1P)	02/09→	103 / 140										
		606800	Ate		**2491401**	[–] 24914 18		Luc		**2355406**	[–] 23554 16.2	⊖ elect. handbr.
1.6 dCi (BZ00, BZ12)	04/11→	96 / 130										
			Ate		**82032000**			Bos		**2482001**	[–] 24820 15.7	⊕ elect. handbr.
			Ate		**82062900**					**82076200**		⊕ elect. handbr.
				PRO	**92195503**	ø 280 x 24 x 44						
					TPM0004							
		606900	Ate		**2471001**	[–] 24710 18		Luc		**2355406**	[–] 23554 16.2	⊖ elect. handbr.
2.0 dCi	07/12→	120 / 163										
2.0 dCi (BZ0L)	04/09→	118 / 160	Ate		**82062900**			Bos		**2482001**	[–] 24820 15.7	⊕ elect. handbr.
2.0 TCe (BZ0K)	11/08→	132 / 180										
				PRO	**92195603**	ø 296 x 26 x 43.9				**82076200**		⊕ elect. handbr.
					TPM0004			Luc		**82503100**		⊖ elect. handbr.
									ABS	**92196000**	ø 260 x 8 x 89	
		607000	Ate		**2471001**	[–] 24710 18		Luc		**2355406**	[–] 23554 16.2	⊖ elect. handbr.
2.0 dCi (BZ0Y)	10/10→	110 / 150										
			Ate		**82062900**			Bos		**2482001**	[–] 24820 15.7	⊕ elect. handbr.
			Ate		**82076800**					**82076200**		⊕ elect. handbr.
				PRO	**92195603**	ø 296 x 26 x 43.9		Luc		**82503100**		⊖ elect. handbr.
					TPM0004				ABS	**92195900**	ø 260 x 8 x 88.1	
		607100	Ate		**2471001**	[–] 24710 18		Luc		**2355406**	[–] 23554 16.2	⊕ elect. handbr.
2.0 TCe	06/12→	140 / 190										
			Ate		**82076800**			Bos		**2482001**	[–] 24820 15.7	⊖ elect. handbr.
				PRO	**92195603**	ø 296 x 26 x 43.9				**82076200**		⊕ elect. handbr.
					TPM0004				ABS	**92195900**	ø 260 x 8 x 88.1	
MEGANE III Schrägheck (BZ0_) 11/08→ → MEGANE III Hatchback (BZ0_), Page 979													
MEGANE CC (EZ0/1_) 06/10→													
		607200	Ate		**2491401**	[–] 24914 18		Luc		**2355406**	[–] 23554 16.2	⊖ elect. handbr.
1.2 TCe (EZ16)	01/13→	97 / 132										
			Ate		**82032000**			Bos		**2482001**	[–] 24820 15.7	⊕ elect. handbr.
				PRO	**92195503**	ø 280 x 24 x 44				**82076200**		⊕ elect. handbr.
					TPM0004				ABS	**92195900**	ø 260 x 8 x 88.1	
		607300	Ate		**2491401**	[–] 24914 18		Luc		**2355406**	[–] 23554 16.2	⊖ elect. handbr.
1.4 TCe (EZ0F, EZ1V)	06/10→	96 / 131										
1.5 dCi (EZ09, EZ1G, EZ0D)	06/10→	81 / 110	Ate		**82032000**			Bos		**2482001**	[–] 24820 15.7	⊕ elect. handbr.
1.6 16V (EZ0U, EZ1U)	06/10→	81 / 110										
1.6 dCi (EZ00)	04/11→	96 / 130	Ate		**82062900**					**82076200**		⊕ elect. handbr.
1.9 dCi (EZ0J, EZ1S)	06/10→	96 / 131										
2.0 CVT (EZ0G, EZ1E, EZ1P)	06/10→	103 / 140		PRO	**92195503**	ø 280 x 24 x 44		Luc		**82503100**		⊖ elect. handbr.
					TPM0004				ABS	**92195900**	ø 260 x 8 x 88.1	
		607400	Ate		**2471001**	[–] 24710 18		Luc		**2355406**	[–] 23554 16.2	⊖ elect. handbr.
2.0 dCi (EZ0L)	06/10→	118 / 160										
			Ate		**82062900**			Bos		**2482001**	[–] 24820 15.7	⊕ elect. handbr.

R-S

		kW / hp											
MEGANE CC (EZ0/1_) 06/10→													
607400													
2.0 dCi (EZ0L)	06/10→	118 / 160		PRO	92195603	ø 296 x 26 x 43.9				82076200		⊕ elect. handbr.
					TPM0004				Luc	82503100		⊖ elect. handbr.
				ABS	92195900	ø 260 x 8 x 88.1						
607500			Bre		2416201	[–] 24162 15.3		Luc		2355406	[–] 23554 16.2	⊖ elect. handbr.
2.0 TCe (EZ1T)	06/10→	132 / 180						Bos		2482001	[–] 24820 15.7	⊕ elect. handbr.
										82076200		⊕ elect. handbr.
								Luc		82503100		⊖ elect. handbr.
607600			Ate		2471001	[–] 24710 18		Luc		2355406	[–] 23554 16.2	⊕ elect. handbr.
2.0 Turbo	10/11→	195 / 265	Ate		82076800			Bos		2482001	[–] 24820 15.7	⊖ elect. handbr.
				PRO	92195603	ø 296 x 26 x 43.9				82076200		⊕ elect. handbr.
				ABS	92195900	ø 260 x 8 x 88.1						
MEGANE Scenic (JA0/1_) 10/96→10/99													
607700			Luc		2146306	[–] 21463 18.2	→09/98	Luc		2355401	[–] 23554 15.2	⊕ rear disc brake
1.4 i (JA0E)	01/97→09/99	55 / 75										
1.6 i (JA0L)	01/97→09/99	55 / 75	Luc		2317203	[–] 23172 18.3	09/99→	Luc	epad	2355482	[–] 23554 15.2	⊕ rear disc brake
			Gir		2138802	[+] 21388 18.3	09/98→	Luc		82037300		
			Luc		2146304	[+] 21463 18.2	→09/98	Luc		82063300		
			Luc		82062800					91050000	ø 228.6 x 41.5	⊕ rear drum brake
				PRO	92064803	ø 262 x 22 x 44	09/98→	Bos		97012100		
				PRO	92100903	ø 259 x 20.6 x 41	→09/98			84050000	bore ø 20.6 ø 228.6 x 41.5	⊕ rear drum brake
				PRO	92113903	ø 280 x 24 x 44	09/99→		PRO	92141403	ø 274 x 11 x 82.2	⊕ rear disc brake
										94013700	ø 228,6 x 52.5	⊕ rear drum brake
607800			Luc		2317203	[–] 23172 18.3		Luc		2355401	[–] 23554 15.2	⊕ rear disc brake
1.6 16V (JA0B, JA04, JA11)	04/98→10/99	79 / 107	Luc		82062800		⊕ ABS	Luc	epad	2355482	[–] 23554 15.2	⊕ rear disc brake
				PRO	92113903	ø 280 x 24 x 44		Luc		82037300		
								Luc		82063300		
										91050000	ø 228.6 x 41.5	⊕ rear drum brake
								Bos		97012100		
										84050000	bore ø 20.6 ø 228.6 x 41.5	⊕ rear drum brake
									PRO	92141403	ø 274 x 11 x 82.2	⊕ rear disc brake
										94013700	ø 228,6 x 52.5	⊕ rear drum brake
607900			Luc		2146306	[–] 21463 18.2	→09/98			91050000	ø 228.6 x 41.5	
1.6 e (JA0F)	10/96→10/99	66 / 90	Luc		2317203	[–] 23172 18.3	09/98→	Bos		97012100		
			Gir		2138802	[+] 21388 18.3	⊕ autom.			84050000	bore ø 20.6 ø 228.6 x 41.5	
			Luc		2146304	[+] 21463 18.2	→09/98			94013700	ø 228,6 x 52.5	
			Luc		82062800							
				PRO	92064803	ø 262 x 22 x 44	→09/98 ⊕ autom.					
				PRO	92100903	ø 259 x 20.6 x 41	→09/98					
				PRO	92113903	ø 280 x 24 x 44	09/98→					
608000			Luc		2317203	[–] 23172 18.3	09/99→	Luc		2355401	[–] 23554 15.2	⊕ rear disc brake
1.9 D (JA0J)	03/97→09/99	47 / 64	Gir		2138802	[+] 21388 18.3		Luc	epad	2355482	[–] 23554 15.2	⊕ rear disc brake

R - S

MEGANE Scenic (JA0/1_) 10/96→10/99

		kW / hp									
1.9 D (JA0J)	03/97→09/99	608000 47 / 64	Luc	82062800			Luc	82037300		
				PRO 92064803	ø 262 x 22 x 44		Luc	82063300		
				PRO 92113803	ø 280 x 24 x 44	⊕ rim 5 hole		91050000	ø 228.6 x 41.5	⊕ rear drum brake
				PRO 92113903	ø 280 x 24 x 44	09/99→ ⊕ rim 4 hole	Bos	97012100		
				TPM0004				84050000	bore ø 20.6 ø 228.6 x 41.5	⊕ rear drum brake
								PRO 92141403	ø 274 x 11 x 82.2	⊕ rear disc brake
								94013700	ø 228,6 x 52.5	⊕ rear drum brake
1.9 dT (JA0K, JA0Y)	01/97→09/99	608100 66 / 90	Luc	2317203	[–] 23172 18.3	09/99→	Luc	2355401	[–] 23554 15.2	⊕ rear disc brake
2.0 i (JA0G)	01/97→09/99	84 / 114	Gir	2138802	[+] 21388 18.3		Luc	epad 2355482	[–] 23554 15.2	⊕ rear disc brake
			Luc	82062800			Luc	82037300		
				PRO 92064803	ø 262 x 22 x 44		Luc	82063300		
				PRO 92113803	ø 280 x 24 x 44	09/99→ ⊕ rim 5 hole		91050000	ø 228.6 x 41.5	⊕ rear drum brake
				PRO 92113903	ø 280 x 24 x 44	09/99→ ⊕ rim 4 hole	Bos	97012100		
				TPM0004				84050000	bore ø 20.6 ø 228.6 x 41.5	⊕ rear drum brake
								PRO 92141403	ø 274 x 11 x 82.2	⊕ rear disc brake
								94013700	ø 228,6 x 52.5	⊕ rear drum brake
1.9 dTi (JA0N)	04/97→09/99	608200 72 / 98	Luc	2317203	[–] 23172 18.3	04/99→	Luc	2355401	[–] 23554 15.2	⊕ rear disc brake
			Gir	2138802	[+] 21388 18.3	→03/99	Luc	epad 2355482	[–] 23554 15.2	⊕ rear disc brake
			Luc	82062800			Luc	82037300		
				PRO 92064803	ø 262 x 22 x 44		Luc	82063300		
				PRO 92113903	ø 280 x 24 x 44	09/99→		91050000	ø 228.6 x 41.5	⊕ rear drum brake
							Bos	97012100		
								84050000	bore ø 20.6 ø 228.6 x 41.5	⊕ rear drum brake
								PRO 92141403	ø 274 x 11 x 82.2	⊕ rear disc brake
								94013700	ø 228,6 x 52.5	⊕ rear drum brake
2.0 i (JA0G)	01/99→09/99	608300 80 / 109	Gir	2138802	[+] 21388 18.3		Luc	2355401	[–] 23554 15.2	⊕ rear disc brake
			Luc	82062800			Luc	epad 2355482	[–] 23554 15.2	⊕ rear disc brake
				PRO 92064803	ø 262 x 22 x 44		Luc	82037300		
				TPM0004			Luc	82063300		
								91050000	ø 228.6 x 41.5	⊕ rear drum brake
							Bos	97012100		
								84050000	bore ø 20.6 ø 228.6 x 41.5	⊕ rear drum brake
								PRO 92141403	ø 274 x 11 x 82.2	⊕ rear disc brake
								94013700	ø 228,6 x 52.5	⊕ rear drum brake
2.0 RXE 4x4	05/97→10/99	608400 84 / 114	Luc	2317203	[–] 23172 18.3	09/99→	Luc	2355401	[–] 23554 15.2	⊕ rear disc brake
			Gir	2138802	[+] 21388 18.3	→09/99	Luc	epad 2355482	[–] 23554 15.2	⊕ rear disc brake
			Luc	82062800			Luc	82037300		
				PRO 92064803	ø 262 x 22 x 44	→09/99	Luc	82063300		
				PRO 92113803	ø 280 x 24 x 44	09/99→ ⊕ rim 5 hole		91050000	ø 228.6 x 41.5	⊕ rear drum brake
				PRO 92113903	ø 280 x 24 x 44	09/99→ ⊕ rim 4 hole	Bos	97012100		

		kW / hp										
MEGANE Scenic (JA0/1_) 10/96→10/99												
		608400										
2.0 RXE 4x4	05/97→10/99	84 / 114		TPM0004				92141403	ø 274 x 11 x 82.2	⊕ rear disc brake		
								94013700	ø 228,6 x 52.5	⊕ rear drum brake		
MODUS / GRAND MODUS (F/JP0_) 09/04→												
		608500	Luc	2397301	[–] 23973 17.3		Luc	2355406	[–] 23554 16.2	⊕ ABS		
1.2	04/11→	76 / 103										
1.2 (FP0C, FP0K, FP0P)	05/05→	48 / 65	Luc	82072200			Luc	82503100		⊕ ABS		
1.2 (JP0C, JP0K, FP0C, FP0K, FP0P, JP0P, JP0T)	12/04→	55 / 75										
1.2 (JP0S)	12/04→	58 / 78	Luc	82063300			Luc	82063300		⊕ ABS		
1.2 16V (JP0W)	05/07→	74 / 101										
1.2 16V Hi-Flex	10/08→	55 / 75										
1.4 (JP01, JP0J)	12/04→	72 / 98		92119203	ø 260 x 22 x 44		Lkh	91062600	ø 203.2 x 36.5	⊖ ABS		
1.5 dCi (FP0D, JP0D)	09/04→	60 / 82										
1.5 dCi (FP0E, JP0E)	12/04→	48 / 65		TPM0004				97031100		⊖ ABS		
1.5 dCi (FP0F, JP0F)	12/04→	63 / 86										
1.5 dCi (FP0G, JP0G)	12/04→	50 / 68					Lkh	84062600	bore ø 19 ø 203.2 x 36.5	⊖ ABS		
1.5 dCi (JP02)	05/07→	76 / 103										
1.5 dCi (JP0G, JP0H)	05/05→	78 / 106										
1.5 dCi 75	10/10→	55 / 75						92154400	ø 240 x 8 x 80.8	⊕ ABS		
1.5 dCi 90	10/10→	65 / 88										
1.6 (JP03, JP0B, JP0U, JP0Y, JP1G)	12/04→	82 / 112						94032300	ø 203 x 50.5	SWB		
1.6 (JP0L, JP0V)	12/04→	65 / 88										
PULSE 01/12→												
		608600		92239903	ø 259.7 x 22 x 43.9							
1.2	01/12→	56 / 76										
1.5	01/12→	47 / 64										
SAFRANE II (B54_) 07/96→12/00												
		608700	Luc	2317203	[–] 23172 18.3	04/99→	Bre	2041001	[–] 20410 15			
2.0 16V (B54L)	07/96→12/00	100 / 136										
			Gir	2138802	[+] 21388 18.3	→04/99	Bre	82033300				
				92065000	ø 262 x 22 x 44	→01/98		92065100	ø 265 x 10.5 x 44.4			
				92113803	ø 280 x 24 x 44	01/98→		TPM0004				
				TPM0004								
		608800	Luc	2317203	[–] 23172 18.3	04/99→	Bre	2041001	[–] 20410 15			
2.2 dT (B54G)	07/96→12/00	83 / 113										
2.5 20V (B54F)	07/96→12/00	121 / 165	Gir	2138802	[+] 21388 18.3	→04/99	Bre	82033300				
2.9 24V (B54N)	03/99→12/00	140 / 190		92113803	ø 280 x 24 x 44			92065100	ø 265 x 10.5 x 44.4			
				TPM0004				TPM0004				
		608900	Gir	2138802	[+] 21388 18.3		Bre	2041001	[–] 20410 15			
3.0 V6 (B54M)	07/96→12/00	123 / 167		92113803	ø 280 x 24 x 44		Bre	82033300				
				TPM0004				92065100	ø 265 x 10.5 x 44.4			
								TPM0004				
SAFRANE Mk II (B54_) 07/96→12/00 → SAFRANE II (B54_), Page 983												
SANDERO/STEPWAY 11/07→												
		609000	Luc	2146306	[–] 21463 18.2	→10/08 Ø 238 mm	Luc	91048000	ø 203.2 x 38	8" -brake		
1.0 Hi-Flex	11/07→	57 / 78										
1.5 dCi	02/08→	47 / 64	Luc	2146304	[+] 21463 18.2	Ø 259 mm	Bos	91053700	ø 180 x 42	7" -brake		
1.6	11/07→	68 / 92										
1.6	11/07→	79 / 107										
1.6	12/07→	75 / 102	Luc	82518600		Ø 259 mm		97031000		8" Bosch -brake		
1.6	12/07→	76 / 103										
1.6	02/08→	80 / 109		92036103	ø 238 x 12 x 41	→10/08		97037900		8" TRW -brake		
1.6 Flex	08/08→	82 / 112		92175103	ø 259 x 12 x 41.4			94019700	ø 203,3 x 50.5	⊖ ABS		
				92100903	ø 259 x 20.6 x 41			94023600	ø 180,2 x 53.5	⊖ ABS		
				TPM0004								
		609100	Luc	2146304	[+] 21463 18.2		Luc	91048000	ø 203.2 x 38	8" -brake		
1.4	02/09→	55 / 75										
1.6	02/09→	64 / 87	Luc	82518600		Ø 259 mm	Bos	91053700	ø 180 x 42	7" -brake		
1.6	05/09→	66 / 90										
1.6	11/10→	62 / 84		92175103	ø 259 x 12 x 41.4			97031000		8" Bosch -brake		
				92100903	ø 259 x 20.6 x 41			97037900		8" TRW -brake		
				TPM0004				94019700	ø 203,3 x 50.5	⊖ ABS		

R - S

		kW / hp											
SANDERO/STEPWAY 11/07→													
		609100											
1.4	02/09→	55 / 75											
1.6	02/09→	64 / 87											
1.6	05/09→	66 / 90											
1.6	11/10→	62 / 84											
										94023600	ø 180,2 x 53.5	⊖ ABS	
SCALA 04/09→													
		609200		PRO	92239903	ø 259.7 x 22 x 43.9							
1.5	04/09→	63 / 86											
1.5	04/09→	73 / 99											
1.6	09/11→	81 / 110											
		609300	Luc		2440301	[+] 24403 17.3							
1.5	02/13→	74 / 101		PRO	92239903	ø 259.7 x 22 x 43.9							
SCÉNIC I (JA0/1_) 09/99→09/03													
		609400	Luc		2317203	[–] 23172 18.3		Luc		2355401	[–] 23554 15.2	⊕ rear disc brake	
1.4 16V (JA0D, JA1H, JaOW, JA10)	09/99→08/03	70 / 95	Gir		2138802	[+] 21388 18.3	→09/99	Luc	epad	2355482	[–] 23554 15.2	⊕ rear disc brake	
			Luc		82062800			Luc		82037300			
				PRO	92064803	ø 262 x 22 x 44	→09/99	Luc		82063300			
				PRO	92113903	ø 280 x 24 x 44				91050000	ø 228.6 x 41.5	⊕ rear drum brake	
								Bos		97012100			
										84050000	bore ø 20.6 ø 228.6 x 41.5	⊕ rear drum brake	
									PRO	92141403	ø 274 x 11 x 82.2	⊕ rear disc brake	
										94013700	ø 228,6 x 52.5	⊕ rear drum brake	
		609500	Luc		2317203	[–] 23172 18.3		Luc		2355401	[–] 23554 15.2	⊕ rear disc brake	
1.6	09/99→09/03	79 / 107											
1.6	03/01→08/03	75 / 102											
1.6 16V	09/99→08/03	85 / 116	Luc		82062800		⊕ ABS	Luc	epad	2355482	[–] 23554 15.2	⊕ rear disc brake	
1.6 BiFuel	09/99→04/01	79 / 107											
1.6 BiFuel	03/01→08/03	75 / 102		PRO	92113903	ø 280 x 24 x 44		Luc		82037300			
								Luc		82063300			
										91050000	ø 228.6 x 41.5	⊕ rear drum brake	
								Bos		97012100			
									PRO	92141403	ø 274 x 11 x 82.2	⊕ rear disc brake	
										94013700	ø 228,6 x 52.5	⊕ rear drum brake	
		609600	Luc		2317203	[–] 23172 18.3		Luc		2355401	[–] 23554 15.2	⊕ rear disc brake	
1.6	06/01→09/03	81 / 110		PRO	92113903	ø 280 x 24 x 44		Luc	epad	2355482	[–] 23554 15.2	⊕ rear disc brake	
								Luc		82037300			
								Luc		82063300			
										91050000	ø 228.6 x 41.5	⊕ rear drum brake	
								Bos		97012100			
									PRO	92141403	ø 274 x 11 x 82.2	⊕ rear disc brake	
										94013700	ø 228,6 x 52.5	⊕ rear drum brake	
		609700	Luc		2317203	[–] 23172 18.3		Luc		2355401	[–] 23554 15.2	⊕ rear disc brake	
1.8 16V (JA12, JA1R, JA1M, JA1A)	01/01→08/03	85 / 115											
1.8 4x4	07/00→04/01	85 / 116	Luc		82062800		⊕ ABS	Luc	epad	2355482	[–] 23554 15.2	⊕ rear disc brake	
1.9 dCi (JA05, JA1F)	09/99→08/03	75 / 102											
1.9 dTi (JA1U)	02/01→08/03	59 / 80		PRO	92113803	ø 280 x 24 x 44	⊕ rim 5 hole	Luc		82037300			
2.0 16V (JA1B, JA1D)	07/00→08/03	102 / 139		PRO	92113903	ø 280 x 24 x 44	⊕ rim 4 hole	Luc		82063300			
					TPM0004					91050000	ø 228.6 x 41.5	⊕ rear drum brake	
								Bos		97012100			
									PRO	92141403	ø 274 x 11 x 82.2	⊕ rear disc brake	
										94013700	ø 228,6 x 52.5	⊕ rear drum brake	

R - S

		kW / hp										
SCÉNIC I (JA0/1_) 09/99→09/03												
		609800	Luc		2317203	[–] 23172 18.3				91050000	ø 228.6 x 41.5	⊕ rear drum brake
1.9 D	09/99→03/01	47 / 64		PRO	92113903	ø 280 x 24 x 44		Bos		97012100		
										84050000	bore ø 20.6 ø 228.6 x 41.5	⊕ rear drum brake
										94013700	ø 228,6 x 52.5	⊕ rear drum brake
		609900	Luc		2317203	[–] 23172 18.3	→02/03	Luc		2355401	[–] 23554 15.2	⊕ rear disc brake
1.9 dCi RX4	11/00→08/03	75 / 102										
1.9 dCi RX4	12/02→08/03	74 / 101										
2.0 16V RX4	06/00→08/03	102 / 139	Luc		82062800		⊕ ABS	Luc	epad	2355482	[–] 23554 15.2	⊕ rear disc brake
				PRO	92113803	ø 280 x 24 x 44	⊕ rim 5 hole	Luc		82037300		
				PRO	92113903	ø 280 x 24 x 44	⊕ rim 4 hole	Luc		82063300		
					TPM0004					91050000	ø 228.6 x 41.5	⊕ rear drum brake
								Bos		97012100		
									PRO	92141403	ø 274 x 11 x 82.2	⊕ rear disc brake
										94013700	ø 228,6 x 52.5	⊕ rear drum brake
		610000	Luc		2317203	[–] 23172 18.3		Luc		2355401	[–] 23554 15.2	⊕ rear disc brake
1.9 dTi (JAON)	09/99→08/03	72 / 98	Luc		82062800		⊕ ABS	Luc	epad	2355482	[–] 23554 15.2	⊕ rear disc brake
				PRO	92064803	ø 262 x 22 x 44	→09/99	Luc		82037300		
				PRO	92113903	ø 280 x 24 x 44		Luc		82063300		
										91050000	ø 228.6 x 41.5	⊕ rear drum brake
								Bos		97012100		
										84050000	bore ø 20.6 ø 228.6 x 41.5	⊕ rear drum brake
									PRO	92141403	ø 274 x 11 x 82.2	⊕ rear disc brake
										94013700	ø 228,6 x 52.5	⊕ rear drum brake
		610100	Luc		2317203	[–] 23172 18.3		Luc		2355401	[–] 23554 15.2	⊕ rear disc brake
2.0 16V	09/99→08/03	103 / 140	Luc		82062800		→09/99	Luc	epad	2355482	[–] 23554 15.2	⊕ rear disc brake
				PRO	92113803	ø 280 x 24 x 44	⊕ rim 5 hole	Luc		82037300		
				PRO	92113903	ø 280 x 24 x 44	⊕ rim 4 hole	Luc		82063300		
					TPM0004					91050000	ø 228.6 x 41.5	⊕ rear drum brake
								Bos		97012100		
									PRO	92141403	ø 274 x 11 x 82.2	⊕ rear disc brake
										94013700	ø 228,6 x 52.5	⊕ rear drum brake
SCÉNIC II (JM0/1_) 06/03→07/10												
		610200	Bos		2393001	[–] 23930 18.1	→10/05	Luc		2355406	[–] 23554 16.2	
1.4 (JM0B, JM0H, JM1A)	06/03→	72 / 98										
1.5 dCi (JM02, JM13)	11/03→	74 / 101	Ate		2453601	[–] 24536 18.3	10/05→		ABS	92154500	ø 270 x 10 x 82	
1.5 dCi (JM1F)	05/05→	63 / 86										
1.6 BiFuel	08/03→05/06	83 / 113										
1.9 dCi (JM14)	05/05→	96 / 131	Bos		82054200		→10/05					
2.0 (JM05, JM0U, JM1N, JM1U, JM2V)	06/03→	99 / 135	Ate		82032100		10/05→					
2.0 16V Turbo (JM0W)	05/04→	120 / 163	Ate		82062900		10/05→					
				PRO	92149503	ø 300 x 24 x 43.7						
		610300	Bos		2393001	[–] 23930 18.1	→10/05	Luc		2355406	[–] 23554 16.2	
1.5 dCi (JM0F)	06/03→	60 / 82	Ate		2453601	[–] 24536 18.3	10/05→		ABS	92154500	ø 270 x 10 x 82	
			Bos		82054200		→10/05					
			Ate		82032100		10/05→					

R - S

		kW / hp										
SCÉNIC II (JM0/1_) 06/03→07/10												
610300			Ate		**82062900**		10/05→					
1.5 dCi (JM0F)	06/03→	60 / 82		PRO	**92113903**	ø 280 x 24 x 44						
610400			Ate		**2453501**	[–] 24535 18.3		Luc		**2355406**	[–] 23554 16.2	
1.5 dCi (JM16)	01/07→	76 / 103										
1.6 16V (JM1R)	01/07→	82 / 112	Ate		**82032100**				ABS	**92154500**	ø 270 x 10 x 82	
			Ate		**82062900**							
				PRO	**92113903**	ø 280 x 24 x 44						
610500			Bos		**2393001**	[–] 23930 18.1	→10/05	Luc		**2355406**	[–] 23554 16.2	
1.5 dCi (JM1E)	05/05→	78 / 106										
1.9 dCi (JM0G, JM12, JM1G, JM2C)	06/03→	88 / 120	Ate		**2453601**	[–] 24536 18.3	10/05→		ABS	**92154500**	ø 270 x 10 x 82	
2.0	06/03→07/10	103 / 140	Bos		**82054200**		→10/05					
			Ate		**82032100**		10/05→					
				PRO	**92149503**	ø 300 x 24 x 43.7						
610600			Ate		**2453601**	[–] 24536 18.3		Luc		**2355406**	[–] 23554 16.2	
1.6	06/06→	77 / 105	Ate		**82032100**				ABS	**92154500**	ø 270 x 10 x 82	
			Ate		**82062900**							
				PRO	**92113903**	ø 280 x 24 x 44						
610700			Bos		**2393001**	[–] 23930 18.1	→10/05	Luc		**2355406**	[–] 23554 16.2	
1.6 (JM0C, JM0J, JM1B)	06/03→	83 / 113	Ate		**2453601**	[–] 24536 18.3	10/05→		ABS	**92154500**	ø 270 x 10 x 82	
			Bos		**82054200**		→10/05					
			Ate		**82032100**		10/05→					
			Ate		**82062900**		10/05→					
				PRO	**92113903**	ø 280 x 24 x 44						
				PRO	**92149503**	ø 300 x 24 x 43.7	LWB					
610800			Ate		**2453501**	[–] 24535 18.3		Luc		**2355406**	[–] 23554 16.2	
1.6 FlexFuel	06/07→	85 / 116	Ate		**82032100**				ABS	**92154500**	ø 270 x 10 x 82	
				PRO	**92113903**	ø 280 x 24 x 44						
					TPM0004							
610900			Ate		**2453601**	[–] 24536 18.3		Luc		**2355406**	[–] 23554 16.2	
1.6 Hi-Flex	03/05→07/10	81 / 110	Ate		**82032100**				ABS	**92154500**	ø 270 x 10 x 82	
			Ate		**82062900**							
				PRO	**92149503**	ø 300 x 24 x 43.7						
611000			Ate		**2453601**	[–] 24536 18.3		Luc		**2355406**	[–] 23554 16.2	
1.9 D	06/06→	85 / 116										
1.9 dCi	06/03→	92 / 125	Ate		**82032100**				ABS	**92154500**	ø 270 x 10 x 82	
1.9 dCi	04/04→10/08	72 / 98										
1.9 dCi (JM15)	05/05→	81 / 110		PRO	**92149503**	ø 300 x 24 x 43.7						
611100			Ate		**2453601**	[–] 24536 18.3		Luc		**2355406**	[–] 23554 16.2	
2.0	02/08→04/09	101 / 138	Ate		**82032100**				ABS	**92154500**	ø 270 x 10 x 82	
				PRO	**92149503**	ø 300 x 24 x 43.7						
					TPM0004							
611200			Bos		**2393001**	[–] 23930 18.1	→10/05	Luc		**2355406**	[–] 23554 16.2	
2.0 dCi (JM1K)	09/05→	110 / 150	Ate		**2453601**	[–] 24536 18.3	10/05→		ABS	**92154500**	ø 270 x 10 x 82	
			Bos		**82054200**		→10/05					

R-S

		kW / hp											
SCÉNIC II (JM0/1_) 06/03→07/10													
611200			Ate		**82032100**		10/05→						
2.0 dCi (JM1K)	09/05→	110 / 150	Ate		**82062900**		10/05→						
SCÉNIC III (JZ0/1_) 02/09→													
611300			Ate		**2471001**	[–] 24710 18		Luc		**2355406**	[–] 23554 16.2	⊖ elect. handbr.
1.2 TCe	04/12→	85 / 116	Ate		**82062900**			Bos		**2482001**	[–] 24820 15.7	⊕ elect. handbr.
			Ate		**82076800**					**82076200**		⊕ elect. handbr.
				PRO	**92195603**	ø 296 x 26 x 43.9			ABS	**92195900**	ø 260 x 8 x 88.1	⊖ elect. handbr.
					TPM0004				PRO	**92232603**	ø 274 x 11 x 86.2	⊕ elect. handbr.
611400			Ate		**2471001**	[–] 24710 18		Luc		**2355406**	[–] 23554 16.2	⊖ elect. handbr.
1.2 TCe (JZ16)	01/13→	97 / 132	Ate		**82076800**			Bos		**2482001**	[–] 24820 15.7	⊕ elect. handbr.
				PRO	**92195603**	ø 296 x 26 x 43.9				**82076200**		⊕ elect. handbr.
					TPM0004				ABS	**92195900**	ø 260 x 8 x 88.1	⊖ elect. handbr.
611500			Ate		**2471001**	[–] 24710 18		Luc		**2355406**	[–] 23554 16.2	⊕ elect. handbr.
1.4 16V (JZ0F)	02/09→	96 / 131	Ate		**82062900**			Bos		**2482001**	[–] 24820 15.7	⊖ elect. handbr.
			Ate		**82076800**					**82076200**		⊕ elect. handbr.
				PRO	**92195603**	ø 296 x 26 x 43.9		Luc		**82503100**		⊖ elect. handbr.
					TPM0004				ABS	**92195900**	ø 260 x 8 x 88.1	
611600			Ate		**2471001**	[–] 24710 18	⊕ rim size 16" rim size 17"	Luc		**2355406**	[–] 23554 16.2	⊖ elect. handbr.
1.5 dCi	02/09→	78 / 106										
1.5 dCi	04/09→	63 / 86										
1.5 dCi	04/09→	81 / 110	Ate		**2491401**	[–] 24914 18	⊕ rim size 15"	Bos		**2482001**	[–] 24820 15.7	⊕ elect. handbr.
1.5 dCi	11/10→	70 / 95										
1.6 E85 (JZ03)	02/09→	81 / 110	Ate		**82032000**		⊕ rim size 15"			**82076200**		⊕ elect. handbr.
			Ate		**82062900**			Luc		**82503100**		⊖ elect. handbr.
			Ate		**82076800**		⊕ rim size 16" rim size 17"		ABS	**92195900**	ø 260 x 8 x 88.1	
				PRO	**92195503**	ø 280 x 24 x 44	⊕ rim size 15"					
				PRO	**92195603**	ø 296 x 26 x 43.9	⊕ rim size 16" rim size 17"					
					TPM0004							
611700			Ate		**2471001**	[–] 24710 18	⊕ rim size 16" rim size 17"	Luc		**2355406**	[–] 23554 16.2	⊖ elect. handbr.
1.6 16V (JZ0U)	02/09→	81 / 110	Ate		**2491401**	[–] 24914 18	⊕ rim size 15"	Bos		**2482001**	[–] 24820 15.7	⊕ elect. handbr.
			Ate		**82032000**		⊕ rim size 15"			**82076200**		⊕ elect. handbr.
			Ate		**82062900**			Luc		**82503100**		⊖ elect. handbr.
			Ate		**82062900**		⊕ rim size 15"		ABS	**92195900**	ø 260 x 8 x 88.1	
			Ate		**82076800**		⊕ rim size 16" rim size 17"					
				PRO	**92195503**	ø 280 x 24 x 44	⊕ rim size 15"					
				PRO	**92195603**	ø 296 x 26 x 43.9	⊕ rim size 16" rim size 17"					
					TPM0004							
611800			Ate		**2471001**	[–] 24710 18		Luc		**2355406**	[–] 23554 16.2	⊖ elect. handbr.
1.6 dCi (JZ00, JZ12)	04/11→	96 / 130	Ate		**82062900**			Bos		**2482001**	[–] 24820 15.7	⊕ elect. handbr.
			Ate		**82076800**					**82076200**		⊕ elect. handbr.
				PRO	**92195603**	ø 296 x 26 x 43.9			ABS	**92195900**	ø 260 x 8 x 88.1	
					TPM0004							
611900			Ate		**2471001**	[–] 24710 18		Luc		**2355406**	[–] 23554 16.2	⊖ elect. handbr.
1.9 dCi	02/09→	96 / 131										
2.0 16V (JZ0G, JZ1E)	02/09→	103 / 140										
2.0 dCi (JZ0L)	04/09→	118 / 160										

R - S

		kW / hp											
SCÉNIC III (JZ0/1_) 02/09→													
2.0 dCi (JZ0Y)	02/09→	110 / 150	Ate		82062900			Bos		2482001	[–] 24820 15.7	⊕ elect. handbr.
			Ate		82076800					82076200		⊕ elect. handbr.
				PRO	92195603	ø 296 x 26 x 43.9		Luc		82503100		⊖ elect. handbr.
					TPM0004				ABS	92195900	ø 260 x 8 x 88.1	
SPORT SPIDER (EF0_) 03/95→10/99													
		612000	Gir		2138802	[+] 21388 18.3		Ben		2150401	[+] 21504 17	
2.0 16V	03/95→10/99	110 / 150			TPM0004					TPM0004		
SYMBOL I (LB0/1/2_) 02/98→02/09 → THALIA I (LB0/1/2_), Page 988													
SYMBOL II (LU1/2_) 09/08→ → THALIA II (LU1/2_), Page 989													
THALIA I (LB0/1/2_) 02/98→02/09													
		612100	Luc		2146306	[–] 21463 18.2		Luc		91048000	ø 203.2 x 38	Lucas ⊕ ABS
1.2	02/98→10/03	43 / 58	Luc		2146304	[+] 21463 18.2		Bos		91053700	ø 180 x 42	Bosch ⊖ ABS
			Luc		82062800		⊕ ABS	Bos		91060200	ø 203.2 x 38	Bosch ⊕ ABS
				PRO	92036103	ø 238 x 12 x 41		Bos		97006400		
				PRO	92036203	ø 238 x 20 x 41	⊕ ABS	Ben		97010400		Lucas ⊕ ABS
				PRO	92100903	ø 259 x 20.6 x 41				97031000		Bosch ⊕ ABS
								Luc		84048002	bore ø 17.5 ø 203.2 x 38	Lucas ⊕ ABS
								Bos		84053700	bore ø 19 ø 180 x 42	Bosch ⊖ ABS
								Bos		84060200	bore ø 17.5 ø 203.2 x 38	Bosch ⊕ ABS
										94019700	ø 203,3 x 50.5	
										94023600	ø 180,2 x 53.5	
		612200	Luc		2146306	[–] 21463 18.2		Luc		91048000	ø 203.2 x 38	Lucas ⊕ ABS
1.2 16V	04/02→	55 / 75										
1.4	08/00→	55 / 75	Luc		2146304	[+] 21463 18.2		Bos		91053700	ø 180 x 42	Bosch ⊖ ABS
			Luc		82062800		⊕ ABS	Bos		91060200	ø 203.2 x 38	Bosch ⊕ ABS
				PRO	92036103	ø 238 x 12 x 41		Ben		97010400		Lucas ⊕ ABS
				PRO	92036203	ø 238 x 20 x 41				97031000		Bosch ⊕ ABS
				PRO	92100903	ø 259 x 20.6 x 41		Bos		84060201	bore ø 19 ø 203.2 x 38	⊖ ABS
										94019700	ø 203,3 x 50.5	Lucas
										94023600	ø 180,2 x 53.5	Bosch
										94027500	ø 203,3 x 50.5	12/02→ ⊕ ABS
		612300	Luc		2146306	[–] 21463 18.2		Luc		91048000	ø 203.2 x 38	Lucas ⊕ ABS
1.4 16V	08/00→	72 / 98										
1.5 dCi	06/01→	60 / 82										
1.5 dCi	04/02→	48 / 65	Luc		2146304	[+] 21463 18.2		Bos		91053700	ø 180 x 42	Bosch ⊖ ABS
1.6 16V	04/02→	79 / 107										
1.6 Flex	05/00→10/04	81 / 110	Luc		82062800		⊕ ABS	Bos		91060200	ø 203.2 x 38	Bosch ⊕ ABS
				PRO	92036103	ø 238 x 12 x 41		Ben		97010400		Lucas ⊕ ABS
				PRO	92036203	ø 238 x 20 x 41				97031000		Bosch ⊕ ABS
				PRO	92100903	ø 259 x 20.6 x 41				94019700	ø 203,3 x 50.5	Lucas
										94023600	ø 180,2 x 53.5	Bosch
										94027500	ø 203,3 x 50.5	12/02→
		612400	Luc		2146306	[–] 21463 18.2		Luc		91048000	ø 203.2 x 38	Lucas ⊕ ABS
1.5 dCi	02/03→	50 / 68										
1.5 dCi	04/04→11/09	58 / 79	Luc		2146304	[+] 21463 18.2		Bos		91053700	ø 180 x 42	Bosch ⊖ ABS
1.5 dCi	06/05→	47 / 64										
1.6	01/04→12/08	82 / 112	Luc		82062800		⊕ ABS	Bos		91060200	ø 203.2 x 38	Bosch ⊕ ABS

		kW / hp										
THALIA I (LB0/1/2_) 02/98→02/09												
		612400			92036103	ø 238 x 12 x 41		Ben		97010400		Lucas ⊕ ABS
1.5 dCi	02/03→	50 / 68										
1.5 dCi	04/04→11/09	58 / 79			92036203	ø 238 x 20 x 41				97031000		Bosch ⊕ ABS
1.5 dCi	06/05→	47 / 64										
1.6	01/04→12/08	82 / 112			92100903	ø 259 x 20.6 x 41				94019700	ø 203,3 x 50.5	Lucas
										94023600	ø 180,2 x 53.5	Bosch
										94027500	ø 203,3 x 50.5	
		612500	Luc		2146306	[–] 21463 18.2		Luc		91048000	ø 203.2 x 38	Lucas ⊕ ABS
1.6	03/98→	66 / 90	Luc		2146304	[+] 21463 18.2		Bos		91053700	ø 180 x 42	Bosch ⊖ ABS
			Luc		82062800		⊕ ABS	Bos		91060200	ø 203.2 x 38	Bosch ⊕ ABS
					92036203	ø 238 x 20 x 41		Ben		97010400		Lucas ⊕ ABS
					92100903	ø 259 x 20.6 x 41				97031000		Bosch ⊕ ABS
										94019700	ø 203,3 x 50.5	Lucas
										94023600	ø 180,2 x 53.5	Bosch
		612600	Luc		2146306	[–] 21463 18.2		Luc		91048000	ø 203.2 x 38	Lucas ⊕ ABS
1.6 Flex	11/04→02/09	81 / 110	Luc		2146304	[+] 21463 18.2		Bos		91053700	ø 180 x 42	Bosch ⊖ ABS
1.9 D	02/98→05/01	48 / 65	Luc		82062800		⊕ ABS	Bos		91060200	ø 203.2 x 38	Bosch ⊕ ABS
					92036103	ø 238 x 12 x 41		Ben		97010400		Lucas ⊕ ABS
					92036203	ø 238 x 20 x 41				97031000		Bosch ⊕ ABS
					92100903	ø 259 x 20.6 x 41				94019700	ø 203,3 x 50.5	Lucas
										94023600	ø 180,2 x 53.5	Bosch
		612700	Luc		2146306	[–] 21463 18.2		Ben		2097401	[o] 20974 11	
2.0	09/01→	124 / 169	Luc		2146304	[+] 21463 18.2		Luc		91048000	ø 203.2 x 38	Lucas ⊕ ABS
			Luc		82062800		⊕ ABS	Bos		91053700	ø 180 x 42	Bosch ⊖ ABS
					92036103	ø 238 x 12 x 41		Bos		91060200	ø 203.2 x 38	Bosch ⊕ ABS
					92036203	ø 238 x 20 x 41		Ben		97010400		Lucas ⊕ ABS
					92100903	ø 259 x 20.6 x 41				97031000		Bosch ⊕ ABS
										92070300	ø 238 x 8 x 74.6	
										94019700	ø 203,3 x 50.5	Lucas
										94023600	ø 180,2 x 53.5	Bosch
		612800	Lkh		2034501	[–] 20345 16.9		Ben		2150401	[+] 21504 17	
3.0 V6 Turbo Sport	04/00→09/01	169 / 230										
3.0 V6 Turbo Sport	06/02→	187 / 254			TPM0004			Ben		82029500		
THALIA II (LU1/2_) 09/08→												
		612900	Luc		2397301	[–] 23973 17.3		Luc		2355406	[–] 23554 16.2	⊕ ESP
1.2 16V (LU2V)	09/08→	55 / 75	Luc		82063300			Luc		82503100		⊕ ESP
					92119203	ø 260 x 22 x 44		Luc		82063300		⊕ ESP
					TPM0004			Lkh		91062600	ø 203.2 x 36.5	⊖ ESP
										97031100		⊖ ESP
								Lkh		84062600	bore ø 19 ø 203.2 x 36.5	⊖ ESP
										92154400	ø 240 x 8 x 80.8	⊕ ESP
		613000	Luc		2397301	[–] 23973 17.3		Luc		2355406	[–] 23554 16.2	⊕ ESP
1.5 dCi	09/08→	47 / 64										
1.5 dCi	09/08→	62 / 85	Luc		82072200			Luc		82503100		⊕ ESP
1.5 dCi	01/09→	48 / 65										
1.5 dCi	01/09→	66 / 90										
1.6	01/09→	48 / 65										

R - S

kW / hp												
THALIA II (LU1/2_) 09/08→												
1.6	01/09→	66 / 90	Luc		82063300			Luc		82063300		⊕ ESP
1.6 16V	09/08→	77 / 105		PRO	92119203	ø 260 x 22 x 44		Lkh		91062600	ø 203.2 x 36.5	⊖ ESP
1.6 16V (LU1A, LU1B, LU1D, LU2M)	01/09→	79 / 107			TPM0004					97031100		⊖ ESP
								Lkh		84062600	bore ø 19 ø 203.2 x 36.5	⊖ ESP
									ABS	92154400	ø 240 x 8 x 80.8	⊕ ESP
		613100	Luc		2397301	[–] 23973 17.3		Luc		2355406	[–] 23554 16.2	⊕ ESP
1.6 Flex	03/09→	85 / 115										
1.6 Flex	04/09→	70 / 95	Luc		82072200			Luc		82503100		⊕ ESP
				PRO	92119203	ø 260 x 22 x 44		Lkh		91062600	ø 203.2 x 36.5	⊖ ESP
					TPM0004					97031100		⊖ ESP
								Lkh		84062600	bore ø 19 ø 203.2 x 36.5	⊖ ESP
TONDAR 90 (LS_) 09/04→ → LOGAN (LS_), Page 965												
TONDAR 90 Kombi (KS_) 04/07→ → LOGAN Estate (KS_), Page 966												
TRAFIC II Box (FL) 03/01→												
		613200	Luc		2309902	[+] 23099 18.4		Luc		2398001	[–] 23980 17	
1.9 dCi	03/01→	75 / 102										
1.9 dCi	04/01→07/03	59 / 80	Luc		82063500			Luc		82063300		
1.9 dCi 100 (FLOC)	03/01→	74 / 101										
1.9 dCi 80 (FLOB)	03/01→	60 / 82		PRO	92116003	ø 305.5 x 28 x 49.7			ABS	92153700	ø 280 x 12 x 102.2	
2.0 (FLOA)	03/01→	88 / 120										
2.0 16V	08/06→	86 / 117			TPM0004							
2.0 dCi 115 (FLO1, FLOU)	08/06→	84 / 114										
2.0 dCi 90 (FLOH)	08/06→	66 / 90										
2.5 dCi	08/07→	84 / 114										
2.5 dCi 135 (FLOD)	05/03→	99 / 135										
2.5 dCi 145 (FLOJ)	08/06→	107 / 146										
2.5 DTi	03/03→07/03	99 / 135										
TRAFIC II Bus (JL) 03/01→												
		613300	Luc		2309902	[+] 23099 18.4		Luc		2398001	[–] 23980 17	
1.9 dCi	04/01→07/03	59 / 80										
1.9 dCi	06/01→	75 / 102	Luc		82063500			Luc		82063300		
1.9 dCI 100 (JLOC)	03/01→	74 / 101										
1.9 dCI 80 (JLOB)	03/01→	60 / 82		PRO	92116003	ø 305.5 x 28 x 49.7			ABS	92153700	ø 280 x 12 x 102.2	
2.0 (JLOA)	03/01→	88 / 120										
2.0 16V	08/06→	86 / 117			TPM0004							
2.0 dCi 115 (JLOH)	08/06→	84 / 114										
2.0 dCi 90 (JLOH)	08/06→	66 / 90										
2.5 dCi 115	02/08→	84 / 114										
2.5 dCi 135 (JLOD)	05/03→	99 / 135										
2.5 dCi 145 (JLOJ)	08/06→	107 / 146										
2.5 DTi	03/03→07/03	99 / 135										
TRAFIC II Kasten (FL) 03/01→ → TRAFIC II Box (FL), Page 990												
TRAFIC II Platform/Chassis (EL) 03/01→												
		613400	Luc		2309902	[+] 23099 18.4		Luc		2398001	[–] 23980 17	
1.9 dCi	09/01→07/03	59 / 80										
1.9 dCi 100 (ELOC)	03/01→	74 / 101	Luc		82063500			Luc		82063300		
1.9 dCi 80 (ELOB)	03/01→	60 / 82										
2.0 (ELOA)	03/01→	88 / 120		PRO	92116003	ø 305.5 x 28 x 49.7			ABS	92153700	ø 280 x 12 x 102.2	
2.0 dCi 115 (ELOH)	08/06→	84 / 114										
2.0 dCi 90 (ELOH)	08/06→	66 / 90			TPM0004							
2.5 dCi	08/07→	84 / 114										
2.5 dCi 135 (ELOD)	03/01→	99 / 135										
2.5 dCi 145 (ELOJ)	08/06→	107 / 146										
TRAFIC II Pritsche/Fahrgestell (EL) 03/01→ → TRAFIC II Platform/Chassis (EL), Page 990												
TRAFIC II Van (FL) 03/01→ → TRAFIC II Box (FL), Page 990												
TRAFIC III Box 05/14→												
		613500			TPM0004							
1.6 dCi 115	05/14→	85 / 116										
1.6 dCi 120	05/14→	88 / 120										
1.6 dCi 140	05/14→	103 / 140										
1.6 dCi 90	05/14→	66 / 90										
TRAFIC III Kasten 05/14→ → TRAFIC III Box, Page 990												
TRAFIC Box (FL) 03/01→ → TRAFIC II Box (FL), Page 990												
TRAFIC Box (TXX) 05/89→03/01												
		613600	Ben		2048802	[+] 20488 18.5	Fist-type cal.			91029700	ø 255 x 45	
1.9 D	06/97→03/01	44 / 60	Ben		2092602	[+] 20926 18.5	45 mm piston Ø Fist-type cal. (2 pist.)			91049700	ø 254 x 57	
				PRO	92017203	ø 252 x 24 x 53.5		Ben		91049900	ø 255 x 45	⊕ autom adjustm.
								Ben		97006800		Bendix
								Luc		97013800		Lucas

R - S

		kW / hp									
TRAFIC Box (TXX) 05/89→03/01											
1.9 D	06/97→03/01	613600 44 / 60							94030800	ø 255 x 56	
2.5 D	05/89→03/01	613700 55 / 75	Ben	2048802	[+] 20488	18.5	Fist-type cal.	Luc	91015700	ø 254 x 56	→08/94
2.5 D 4x4	05/89→03/01	55 / 75	Ben	2092602	[+] 20926	18.5	45 mm piston Ø Fist-type cal. (2 pist.)		91029700	ø 255 x 45	
			PRO	92017203	ø 252 x 24 x 53.5				91049700	ø 254 x 57	09/94→
								Ben	91049900	ø 255 x 45	⊕ autom adjustm.
								Ben	97006800		Bendix
								Luc	97006900		→09/94 Lucas
								Luc	97013800		10/94→ Lucas
									84015701	bore ø 25.4 ø 254 x 56	→08/94
TRAFIC Bus (TXW) 05/89→03/01											
1.9 D	06/97→03/01	613800 44 / 60	Ben	2048802	[+] 20488	18.5	Fist-type cal.		91029700	ø 255 x 45	
			Ben	2092602	[+] 20926	18.5	45 mm piston Ø Fist-type cal. (2 pist.)		91049700	ø 254 x 57	
			PRO	92017203	ø 252 x 24 x 53.5			Ben	91049900	ø 255 x 45	⊕ autom adjustm.
								Ben	97006800		Bendix
								Luc	97013800		Lucas
									94030800	ø 255 x 56	
2.5 D	05/89→03/01	613900 55 / 75	Ben	2048802	[+] 20488	18.5	Fist-type cal.	Luc	91015700	ø 254 x 56	→08/94
			Ben	2092602	[+] 20926	18.5	45 mm piston Ø Fist-type cal. (2 pist.)		91029700	ø 255 x 45	
			PRO	92017203	ø 252 x 24 x 53.5				91049700	ø 254 x 57	09/94→
								Ben	91049900	ø 255 x 45	⊕ autom adjustm.
								Ben	97006800		Bendix
								Luc	97006900		→09/94 Lucas
								Luc	97013800		10/94→ Lucas
									84015701	bore ø 25.4 ø 254 x 56	→08/94
									94030800	ø 255 x 56	
2.5 D 4x4	08/89→03/01	614000 55 / 75	Ben	2048802	[+] 20488	18.5	Fist-type cal.	Luc	91015700	ø 254 x 56	→08/94
			Ben	2092602	[+] 20926	18.5	45 mm piston Ø Fist-type cal. (2 pist.)		91029700	ø 255 x 45	
			PRO	92017203	ø 252 x 24 x 53.5				91049700	ø 254 x 57	09/94→
								Ben	91049900	ø 255 x 45	⊕ autom adjustm.
								Ben	97006800		Bendix
								Luc	97006900		→09/94 Lucas
								Luc	97013800		10/94→ Lucas
									94030800	ø 255 x 56	
TRAFIC Kasten (FL) 03/01→ → TRAFIC II Box (FL), Page 990											
TRAFIC Kasten (TXX) 05/89→03/01 → TRAFIC Box (TXX), Page 990											
TRAFIC Platform/Chassis (PXX) 05/89→03/01											
2.5 D	05/89→03/01	614100 51 / 69	Ben	2048802	[+] 20488	18.5	Fist-type cal.	Luc	91015700	ø 254 x 56	→08/94
			Ben	2092602	[+] 20926	18.5	45 mm piston Ø Fist-type cal. (2 pist.)		91029700	ø 255 x 45	
			PRO	92017203	ø 252 x 24 x 53.5				91049700	ø 254 x 57	09/94→
								Ben	91049900	ø 255 x 45	⊕ autom adjustm.
								Ben	97006800		Bendix

R - S

		kW / hp										
TRAFIC Platform/Chassis (PXX) 05/89→03/01												
2.5 D	05/89→03/01	614100 51 / 69						Luc		97006900		→09/94 Lucas
								Luc		97013800		10/94→ Lucas
2.5 D	05/98→03/01	614200 55 / 75	Ben		2048802	[+] 20488 18.5	Fist-type cal.			91029700	ø 255 x 45	
2.5 D 4x4	09/94→01/99	58 / 79	Ben		2092602	[+] 20926 18.5	45 mm piston Ø Fist-type cal. (2 pist.)			91049700	ø 254 x 57	
				PRO	92017203	ø 252 x 24 x 53.5		Ben		91049900	ø 255 x 45	⊕ autom adjustm.
								Ben		97006800		Bendix
								Luc		97013800		Lucas
TRAFIC Pritsche/Fahrgestell (PXX) 05/89→03/01 → TRAFIC Platform/Chassis (PXX), Page 991												
TRAFIC Van (TXX) 05/89→03/01 → TRAFIC Box (TXX), Page 990												
TWINGO I (C06_) 05/96→												
1.0	03/01→05/07	614300 50 / 70	Luc		2146306	[–] 21463 18.2		Ben		91037400	ø 180 x 40	⊖ ABS
1.2	09/98→08/00	44 / 60	Luc		2146304	[+] 21463 18.2		Luc		91048000	ø 203.2 x 38	⊕ ABS
1.2 LPG	10/03→	44 / 60	Luc		82508200			Bos		97006400		⊖ ABS
				PRO	92036103	ø 238 x 12 x 41		Ben		97010400		⊕ ABS
								Ben		84037409	bore ø 20.6 ø 180 x 40	⊖ ABS
								Luc		84048002	bore ø 17.5 ø 203.2 x 38	⊕ ABS
										94013500	ø 180 x 53.5	⊖ ABS
										94019700	ø 203,3 x 50.5	⊕ ABS
1.2 (C066, C068)	05/96→	614400 43 / 58	Ben		2063402	[–] 20634 15	→09/98	Ben		91037400	ø 180 x 40	⊖ ABS →07/98 ⊕ ABS
			Luc		2146306	[–] 21463 18.2	09/98→	Luc		91048000	ø 203.2 x 38	⊕ ABS 07/98→
			Ben		2109601	[+] 21096 15	→09/98	Bos		97006400		⊖ ABS →07/98 ⊕ ABS
			Luc		2146304	[+] 21463 18.2	09/98→	Ben		97010400		⊕ ABS 07/98→
			Ben		82033200		→09/98	Ben		84037408	bore ø 20.6 ø 180 x 40	→07/98 ⊕ ABS
			Luc		82508200		09/98→	Ben		84037409	bore ø 20.6 ø 180 x 40	⊖ ABS
				PRO	92036003	ø 238 x 8 x 41	⊕ man. →09/98	Luc		84048002	bore ø 17.5 ø 203.2 x 38	07/98→ ⊕ ABS
				PRO	92036103	ø 238 x 12 x 41	⊕ man. 09/98→ →09/00 ⊕ autom.			94013500	ø 180 x 53.5	⊖ ABS →07/98 ⊕ ABS
				PRO	92175103	ø 259 x 12 x 41.4	⊕ man. →11/03			94019700	ø 203,3 x 50.5	07/98→ ⊕ ABS
				PRO	92100903	ø 259 x 20.6 x 41	09/00→ →07/07			94027500	ø 203,3 x 50.5	12/02→ ⊕ ABS
1.2 (C067)	05/96→	614500 40 / 54	Ben		2063402	[–] 20634 15	⊕ man.	Ben		91037400	ø 180 x 40	⊖ ABS →07/98 ⊕ ABS
			Luc		2146306	[–] 21463 18.2	⊕ autom.	Luc		91048000	ø 203.2 x 38	⊕ ABS 07/98→
			Ben		2109601	[+] 21096 15	⊕ man.	Bos		97006400		⊖ ABS →07/98 ⊕ ABS
			Luc		2146304	[+] 21463 18.2	⊕ autom.	Ben		97010400		⊕ ABS 07/98→
			Ben		82033200		⊕ man.	Ben		84037408	bore ø 20.6 ø 180 x 40	→07/98 ⊕ ABS
			Luc		82508200		⊕ autom.	Ben		84037409	bore ø 20.6 ø 180 x 40	⊖ ABS
				PRO	92036003	ø 238 x 8 x 41	⊕ man.	Luc		84048002	bore ø 17.5 ø 203.2 x 38	07/98→ ⊕ ABS
				PRO	92036103	ø 238 x 12 x 41	⊕ autom.			94013500	ø 180 x 53.5	⊖ ABS →07/98 ⊕ ABS
										94019700	ø 203,3 x 50.5	07/98→ ⊕ ABS
										94027500	ø 203,3 x 50.5	12/02→ ⊕ ABS
1.2 16V (C060)	08/04→	614600 44 / 60	Luc		2146306	[–] 21463 18.2	Lucas	Ben		91037400	ø 180 x 40	⊖ ABS
			Luc		2146304	[+] 21463 18.2	Lucas	Luc		91048000	ø 203.2 x 38	⊕ ABS
			Luc		82508200		Lucas	Bos		97006400		⊖ ABS

		kW / hp										
TWINGO I (C06_) 05/96→												
614600												
1.2 16V (C060)	08/04→	44 / 60		PRO	92175103	ø 259 x 12 x 41.4		Ben		97010400		⊕ ABS
				PRO	92100903	ø 259 x 20.6 x 41		Ben		84037409	bore ø 20.6 ø 180 x 40	⊖ ABS
								Luc		84048002	bore ø 17.5 ø 203.2 x 38	⊕ ABS
										94013500	ø 180 x 53.5	⊖ ABS
										94019700	ø 203,3 x 50.5	⊕ ABS
										94027500	ø 203,3 x 50.5	⊕ ABS
614700			Luc		2146306	[–] 21463 18.2	Lucas	Ben		91037400	ø 180 x 40	⊖ ABS
1.2 16V (C06C, C06D, C06K)	01/01→	55 / 75	Luc		2146304	[+] 21463 18.2	Lucas	Luc		91048000	ø 203.2 x 38	⊕ ABS
			Luc		82508200		Lucas	Bos		97006400		⊖ ABS
				PRO	92036103	ø 238 x 12 x 41	⊕ reinf. susp.	Ben		97010400		⊕ ABS
				PRO	92175103	ø 259 x 12 x 41.4	⊖ reinf. susp. 11/03→	Ben		84037409	bore ø 20.6 ø 180 x 40	⊖ ABS
				PRO	92100903	ø 259 x 20.6 x 41	⊖ reinf. susp. →10/03	Luc		84048002	bore ø 17.5 ø 203.2 x 38	⊕ ABS
										94013500	ø 180 x 53.5	⊖ ABS
										94019700	ø 203,3 x 50.5	⊕ ABS
										94027500	ø 203,3 x 50.5	12/02→ ⊖ spec.purp.veh.
TWINGO I Box (S06_) 05/96→												
614800			Ben		2063402	[–] 20634 15	→09/98	Ben		91037400	ø 180 x 40	⊖ ABS →07/98 ⊕ ABS
1.2 (S066, S068)	05/96→	43 / 58	Luc		2146306	[–] 21463 18.2	09/98→	Luc		91048000	ø 203.2 x 38	⊕ ABS 07/98→
			Ben		2109601	[+] 21096 15	→09/98	Bos		97006400		⊖ ABS →07/98 ⊕ ABS
			Luc		2146304	[+] 21463 18.2	09/98→	Ben		97010400		⊕ ABS 07/98→
			Ben		82033200		→09/98	Ben		84037408	bore ø 20.6 ø 180 x 40	→07/98 ⊕ ABS
			Luc		82508200		09/98→	Ben		84037409	bore ø 20.6 ø 180 x 40	⊖ ABS
				PRO	92036003	ø 238 x 8 x 41	⊕ man. →09/98	Luc		84048002	bore ø 17.5 ø 203.2 x 38	07/98→ ⊕ ABS
				PRO	92036103	ø 238 x 12 x 41	⊕ man. 09/98→ →09/00 ⊕ autom.			94013500	ø 180 x 53.5	⊖ ABS →07/98 ⊕ ABS
				PRO	92100903	ø 259 x 20.6 x 41	⊕ man. 09/00→			94019700	ø 203,3 x 50.5	07/98→ ⊕ ABS
										94027500	ø 203,3 x 50.5	12/02→ ⊕ ABS
TWINGO I Kasten (S06_) 05/96→ → TWINGO I Box (S06_), Page 993												
TWINGO I Société (S06_) 05/96→ → TWINGO I Box (S06_), Page 993												
TWINGO I Van (S06_) 05/96→ → TWINGO I Box (S06_), Page 993												
TWINGO II (CN0_) 03/07→												
614900			Luc		2146304	[+] 21463 18.2				91071400	ø 203 x 38	Bosch →12/12
1.2 (CN0D)	03/07→	43 / 58	Luc		82508200		vented disc			91080700	ø 203 x 38.2	Teves 12/12→
			Luc		82508200					97037900		Bosch →12/12
			Luc		82518600		solid disc			84071400	bore ø 17.5 ø 203 x 38	Bosch →12/12
				PRO	92175103	ø 259 x 12 x 41.4				94033800	ø 203,3 x 50.5	
				PRO	92100903	ø 259 x 20.6 x 41						
					TPM0004							
615000			Luc		2146304	[+] 21463 18.2				91071400	ø 203 x 38	Bosch →12/12
1.2 16V (CN04, CN0A, CN0B)	03/07→	55 / 75	Luc		82508200					91080700	ø 203 x 38.2	Teves 12/12→
1.2 Turbo (CN0C, CN0F)	03/07→	74 / 100										
1.5 dCi (CN0E)	03/07→	47 / 64										
1.5 dCi (CN0U)	04/08→	62 / 84		PRO	92100903	ø 259 x 20.6 x 41				97037900		Bosch →12/12
					TPM0004					84071400	bore ø 17.5 ø 203 x 38	Bosch →12/12

		kW / hp											
TWINGO II (CN0_) 03/07→													
		615000											
1.2 16V (CN04, CN0A, CN0B)	03/07→	55 / 75								94033800	ø 203,3 x 50.5		
1.2 Turbo (CN0C, CNOF)	03/07→	74 / 100											
1.5 dCi (CN0E)	03/07→	47 / 64											
1.5 dCi (CN0U)	04/08→	62 / 84											
		615100	Luc		2146304	[+] 21463 18.2				91071400	ø 203 x 38	Bosch →12/12	
1.2 16V (CN0K, CN0V)	03/07→	56 / 76		PRO	92100903	ø 259 x 20.6 x 41				91080700	ø 203 x 38.2	Teves 12/12→	
					TPM0004					97037900		Bosch →12/12	
										84071400	bore ø 17.5 ø 203 x 38	Bosch →12/12	
										94033800	ø 203,3 x 50.5		
		615200	Luc		2146304	[+] 21463 18.2				91071400	ø 203 x 38		
1.2 TCe 100 (CN0P)	02/11→	75 / 102	Luc		82508200					97037900			
				PRO	92100903	ø 259 x 20.6 x 41				94033800	ø 203,3 x 50.5		
					TPM0004								
		615300	Luc		2146304	[+] 21463 18.2				91071400	ø 203 x 38	Bosch →12/12	
1.5 dCi 75	10/10→	55 / 75	Luc		82508200					91080700	ø 203 x 38.2	Teves 12/12→	
1.5 dCi 90	10/10→	63 / 86		PRO	92100903	ø 259 x 20.6 x 41				97037900		Bosch →12/12	
					TPM0004					94033800	ø 203,3 x 50.5		
		615400	Ate		2321502	[–] 23215 18.3			Luc	2355406	[–] 23554 16.2		
1.6 RS (CN0N, CN0R, CNOS)	05/08→	98 / 133	Ate		82032100				Luc	82503100			
			Ate		82062900				Luc	82063300			
				PRO	92113903	ø 280 x 24 x 44				92154400	ø 240 x 8 x 80.8		
					TPM0004								
VEL SATIS (BJ0_) 06/02→													
		615500	Ate		2324802	[–] 23248 18.3			Ate	2348202	[–] 23482 16.8		
2.0 16 V Turbo	04/04→	125 / 170											
2.0 dCi (BJ03, BJ0B)	01/06→	127 / 173											
2.0 dCi (BJ03)	08/05→	110 / 150	Ate		82032100				Ate	82503500			
2.0 Turbo	04/05→	108 / 147											
2.2 dCi	12/04→	83 / 113		PRO	92119403	ø 324 x 28 x 47				92159800	ø 300 x 11 x 86.6		
2.2 dCi (BJ0E, BJ0F, BJ0G, BJ0H)	09/04→	102 / 140											
2.2 dCi (BJ0H)	04/04→	85 / 116			TPM0004								
3.0 dCi (BJ0S)	06/06→	133 / 181											
3.5 (BJ01)	10/04→	170 / 231											
		615600	Ate		2324802	[–] 23248 18.3			Ate	2348202	[–] 23482 16.8		
2.0 16V Turbo (BJ0K)	06/02→	120 / 163											
2.2 dCi (BJ0E, BJ0F)	06/02→	110 / 150	Ate		82032100				Ate	82503500			
3.0 dCi (BJ0J, BJ0N)	06/02→	130 / 177											
3.5 V6 (BJ0R, BJ0V, BJ0U)	06/02→	177 / 241		PRO	92119403	ø 324 x 28 x 47				92159800	ø 300 x 11 x 86.6	2002-09→	
										92175700	ø 300 x 11 x 82.2	→2002-09	
					TPM0004								
										92175703	ø 300 x 11 x 82.2	→2002-09	
WIND (E4M_) 07/10→													
		615700	Ate		2321502	[–] 23215 18.3			Luc	2355406	[–] 23554 16.2		
1.2 (E4MF)	07/10→	74 / 101											
1.2 TCe 100 (E4MA)	02/11→	75 / 102	Ate		82062900				Luc	82503100			
1.6 (E4MB, E4MC)	07/10→	98 / 133		PRO	92113903	ø 280 x 24 x 44			Luc	82063300			
					TPM0004					92154400	ø 240 x 8 x 80.8		
ZOE 06/12→													
		615800	Luc		82054900					91069300	ø 228.6 x 42		
ZOE	06/12→	65 / 88											

QM5 12/06→

			615900											
2.0 dCi	12/06→	110 / 150	Sum		2369801	[+] 23698 16			Ake		2387101	[+] 23871 13.8	
2.0 dCi 4x4	12/06→	110 / 150	Sum		82507500				Ake		82507600		
2.0 dCi 4x4	09/07→	127 / 173			92222000	ø 320 x 28 x 44					92144000	ø 292 x 16 x 62	
2.5	12/06→	126 / 171		PRO	92222003	ø 320 x 28 x 44				PRO	92144003	ø 292 x 16 x 62	
2.5 4x4	12/06→	126 / 171									91068200	ø 172 x 32	
											97036900		

MASCOTT Box Body / Estate 01/99→10/10

			616000											
110.35	01/99→06/04	78 / 106	Bre		2912112	[o] 29121 20.3			Bre		2912112	[o] 29121 20.3	
110.50	01/99→06/04	78 / 106			98028500	L260					98028500	L260	
120.35 (A02100003)	05/04→10/10	85 / 115			93117400	ø 290 x 22 x 42.5					93117600	ø 290 x 22 x 78	
130.35	01/99→06/04	92 / 125							Bre		91059000	ø 172 x 42	
140.35	01/01→06/04	103 / 140							Bre		97035000		
150.35	11/02→10/10	78 / 106											
150.35 (A02300161)	10/01→06/04	107 / 146											
160.35 (A02100013)	05/04→10/10	115 / 156											
90.35	01/99→12/01	63 / 86											
			616100											
110.55	01/99→06/04	78 / 106	Brembo PF 2.52 - brake		2916002	[o] 29160 19.9			Bre		2912112	[o] 29121 20.3	
120.55 (A02300005)	05/04→10/10	85 / 115									98028500	L260	
130.55	01/99→06/04	92 / 125									93117600	ø 290 x 22 x 78	
140.55	01/01→06/04	103 / 140			98028500	L260			Bre		91059000	ø 172 x 42	
150.55 (A02300164)	10/01→06/04	107 / 146			93117500	ø 290 x 26 x 42.5			Bre		97035000		
150.65 (A00300166)	10/01→06/04	107 / 146											
160.55 (A02300015)	05/04→10/10	115 / 156											

MASCOTT Dumptruck 01/00→06/04

			616200											
110	01/00→06/04	78 / 106	Bre		2912112	[o] 29121 20.3			Bre		2912112	[o] 29121 20.3	
90	01/00→06/04	78 / 106			98028500	L260					98028500	L260	
					93117400	ø 290 x 22 x 42.5					93117600	ø 290 x 22 x 78	
									Bre		91059000	ø 172 x 42	
									Bre		97035000		

MASCOTT Kasten/Kombi 01/99→10/10 → MASCOTT Box Body / Estate, Page 995

MASCOTT Kipper 01/00→06/04 → MASCOTT Dumptruck, Page 995

MASCOTT Platform/Chassis 01/99→12/10

			616300											
110	01/99→06/04	78 / 106	Brembo PF 2.52 - brake		2916002	[o] 29160 19.9			Bre		2912112	[o] 29121 20.3	
120.55 (A00300005, A01300005)	05/04→12/10	85 / 115									98028500	L260	
120.65 (A00500007)	05/04→12/10	85 / 115			98028500	L260					93117600	ø 290 x 22 x 78	
130	01/99→06/04	92 / 125			93117500	ø 290 x 26 x 42.5			Bre		91059000	ø 172 x 42	
150.35 (A00300164)	10/01→06/04	107 / 146							Bre		97035000		
160.55 (A00300015, A01300015)	05/04→12/10	115 / 156											
160.65 (A00500017, A01500017, B03200017)	05/04→12/10	115 / 156											
			616400											
120.35 (A00100003, A01100003)	05/04→12/10	85 / 115	Bre		2912112	[o] 29121 20.3			Bre		2912112	[o] 29121 20.3	
140	01/01→06/04	103 / 140			98028500	L260					98028500	L260	
150.35 (A00300161)	10/01→06/04	107 / 146			93117400	ø 290 x 22 x 42.5					93117600	ø 290 x 22 x 78	
160.35 (A00100013, A01100013)	05/04→12/10	115 / 156							Bre		91059000	ø 172 x 42	
90	01/99→12/01	63 / 86							Bre		97035000		

MASCOTT Pritsche/Fahrgestell 01/99→12/10 → MASCOTT Platform/Chassis, Page 995

Maxity 03/07→

			616500											
110.28	03/07→	81 / 110	Bre		2922902	[+] 29229 21.4			Bre		2392103	[+] 23921 20.1	
110.28	03/07→	81 / 110											

R - S

		kW / hp									
Maxity 03/07→											
110.32	03/07→	81 / 110		93117500	ø 290 x 26 x 42.5		Bre	82505900			
110.32	03/07→	81 / 110						93117600	ø 290 x 22 x 78		
110.35	03/07→	81 / 110									
110.35	03/07→	81 / 110									
130.35	03/07→	96 / 130									
130.35	03/07→	96 / 130									
150.35	03/07→	110 / 150									
150.35	03/07→	110 / 150									
		616600					Bre	2912113	[+] 29121 20.3		
130.45	03/07→	96 / 130									
130.45	03/07→	96 / 130									
150.45	03/07→	110 / 150									
150.45	03/07→	110 / 150									
MESSENGER Box Body / Estate 09/90→06/99											
		616700	Ben	2907102	[–] 29071 17			15253xx	15253 8		
B 110.45 4x4 (4x4F06)	09/96→06/99	78 / 106									
B 120.35	09/96→06/99	90 / 122	Ben	2998501	[+] 29985 17						
B 120.55 (FN60F7)	09/96→06/99	90 / 122									
				93085800	ø 276 x 24 x 44						
		616800	Ben	2907102	[–] 29071 17	01/93→		15253xx	15253 8		
B 80.35 (FN40B5)	09/90→06/99	55 / 75									
B 80.35 (FN40B5)	09/90→06/99	56 / 76	Ben	2998501	[+] 29985 17	01/93→					
B 80.45 (FN40A5)	09/90→06/99	55 / 75									
B 80.45 (FN40A5)	09/90→06/99	56 / 76		93085700	ø 276 x 24 x 44	→12/92					
				93085800	ø 276 x 24 x 44	01/93→					
MESSENGER Dumptruck 09/96→06/99											
		616900	Ben	2907102	[–] 29071 17			15253xx	15253 8		
B 120.35	09/96→06/99	90 / 122									
B 120.55	09/96→06/99	90 / 122	Ben	2998501	[+] 29985 17						
B 120.65	09/96→06/99	90 / 122									
				93085800	ø 276 x 24 x 44						
MESSENGER Kasten/Kombi 09/90→06/99 → MESSENGER Box Body / Estate, Page 996											
MESSENGER Kipper 09/96→06/99 → MESSENGER Dumptruck, Page 996											
MESSENGER Platform/Chassis 09/90→06/99											
		617000	Ben	2907102	[–] 29071 17			15253xx	15253 8		
B 110.45 16V 4x4 (4x4F06)	09/96→06/99	78 / 106									
B 110.45 4x4 (4x4F06)	09/96→06/99	78 / 106	Ben	2998501	[+] 29985 17						
B 120.35 (FN40B7)	09/96→06/99	90 / 122									
B 120.55 (FN60F7)	09/96→06/99	90 / 122									
B 120.65 (FN60F8)	09/96→06/99	90 / 122		93085800	ø 276 x 24 x 44						
		617100	Ben	2907102	[–] 29071 17	01/93→		15253xx	15253 8		
B 80.35 (FN40B5)	09/90→06/99	55 / 75									
B 80.35 (FN40B5)	09/90→06/99	56 / 76	Ben	2998501	[+] 29985 17	01/93→					
B 80.45 (FN40A5)	09/90→06/99	55 / 75									
B 80.45 (FN40A5)	09/90→06/99	56 / 76		93085700	ø 276 x 24 x 44	→12/92					
				93085800	ø 276 x 24 x 44	01/93→					
MESSENGER Pritsche/Fahrgestell 09/90→06/99 → MESSENGER Platform/Chassis, Page 996											
MESSENGER Sattelschlepper 09/96→06/99 → MESSENGER Truck Tractor, Page 996											
MESSENGER Truck Tractor 09/96→06/99											
		617200	Ben	2907102	[–] 29071 17			15253xx	15253 8		
B 120.55T (FN60F7)	09/96→06/99	90 / 122									
			Ben	2998501	[+] 29985 17						
				93085800	ø 276 x 24 x 44						

		kW / hp									
GHOST 08/08→											
		617300		TPM0003				98042500	L1066		
6.6 V12	08/08→	420 / 571						TPM0003			
								91058700	ø 185 x 30		
								97032200			
PHANTOM 08/02→											
		617400	Ate	2379101	[o] 23791 20.8		Ate	2373001	[o] 23730 17.3		
6.75	08/02→	338 / 460									

		kW / hp											
PHANTOM 08/02→													
617400			Ate		2379181	[o] 23791 20.8		Ate		2373081	[o] 23730 17.3	
6.75	08/02→	338 / 460	Ate		82504100			Ate		82057500		
										91058700	ø 185 x 30	
										97032200		
PHANTOM Coupe 01/07→													
617500			Ate		2379101	[o] 23791 20.8		Ate		2373001	[o] 23730 17.3	
6.75 V12	01/07→	338 / 460	Ate		2379181	[o] 23791 20.8		Ate		2373081	[o] 23730 17.3	
			Ate		82504100			Ate		82057500		
										91058700	ø 185 x 30	
										97032200		
PHANTOM Drophead Coupe 03/06→													
617600			Ate		2379101	[o] 23791 20.8		Ate		2373001	[o] 23730 17.3	
6.75 V12	03/06→	338 / 460	Ate		2379181	[o] 23791 20.8		Ate		2373081	[o] 23730 17.3	
			Ate		82504100			Ate		82057500		
										91058700	ø 185 x 30	
										97032200		
PHANTOM Saloon 08/02→ → PHANTOM, Page 996													
PHANTOM Stufenheck 08/02→ → PHANTOM, Page 996													
SILVER SERAPH 03/98→09/02													
617700			Ate		2148401	[o] 21484 20.8						
5.4	03/98→09/02	240 / 326										
SILVER SERAPH Saloon 03/98→09/02 → SILVER SERAPH, Page 997													
SILVER SERAPH Stufenheck 03/98→09/02 → SILVER SERAPH, Page 997													

		kW / hp											
25 (RF) 09/99→05/05													
617800			Luc		2151503	[+] 21515 18		Ake		2131201	[+] 21312 13	⊕ rear disc brake
1.1	09/99→06/01	55 / 75										
1.1	11/99→05/05	44 / 60										
1.1 16V	01/04→05/05	55 / 75	Luc		82058500		solid disc	Ake		82028400		⊕ rear disc brake
1.4 16V	10/99→05/05	62 / 84										
1.4 16V	10/99→05/05	76 / 103	Luc		82061100		vented disc	Ake		82063000		
1.6 16V	10/99→05/05	80 / 109										
1.8 16V	10/99→05/05	85 / 116										
1.8 16V	02/00→05/05	107 / 146			92090100	ø 262 x 13 x 44.6				91043900	ø 203.2 x 38	⊕ rear drum brake
2.0 iDT	10/99→05/05	74 / 101										
2.0 iDT	01/02→12/04	83 / 113		PRO	92060903	ø 262 x 21 x 44.6		Lkh		97013500		⊕ rear drum brake
										92060800	ø 239 x 10 x 48.1	⊕ rear disc brake
										94017600	ø 203,0 x 45.5	⊕ rear drum brake
45 (RT) 02/00→05/05													
617900			Luc		2151503	[+] 21515 18		Ake		2131201	[+] 21312 13	⊕ rear disc brake
1.4	02/00→05/05	76 / 103										
1.6	02/00→05/05	80 / 109	Luc		82058500		⊖ ABS	Ake		82028400		⊕ rear disc brake
2.0 iDT	02/00→05/05	74 / 101										
2.0 iDT	01/04→05/05	83 / 113			92090100	ø 262 x 13 x 44.6		Ake		82063000		
				PRO	92060903	ø 262 x 21 x 44.6				91043900	ø 203.2 x 38	⊕ rear drum brake
								Lkh		97013500		⊕ rear drum brake
										83043900	bore ø 19 ø 203.2 x 38	
										92060800	ø 239 x 10 x 48.1	⊕ rear disc brake
										94017600	ø 203,0 x 45.5	⊕ rear drum brake
618000			Luc		2151503	[+] 21515 18		Ake		2131201	[+] 21312 13	⊕ rear disc brake
1.8	02/00→05/05	86 / 117										

R - S

		kW / hp										
45 (RT) 02/00→05/05												
2.0 V6	02/00→05/05	110 / 150	Luc		82058500		⊖ ABS	Ake		82028400		⊕ rear disc brake
					92090100	ø 262 x 13 x 44.6		Ake		82063000		
				PRO	92060903	ø 262 x 21 x 44.6				91043900	ø 203.2 x 38	⊕ rear drum brake
								Lkh		97013500		⊕ rear drum brake
										92060800	ø 239 x 10 x 48.1	⊕ rear disc brake
										94017600	ø 203,0 x 45.5	⊕ rear drum brake
45 Saloon (RT) 02/00→05/05												
		618100	Luc		2151503	[+] 21515 18		Ake		2131201	[+] 21312 13	⊕ rear disc brake
1.4	02/00→05/05	76 / 103										
1.6	02/00→05/05	80 / 109										
2.0 iDT	02/00→05/05	74 / 101	Luc		82058500		⊖ ABS	Ake		82028400		⊕ rear disc brake
2.0 iDT	01/04→05/05	83 / 113										
					92090100	ø 262 x 13 x 44.6		Ake		82063000		
				PRO	92060903	ø 262 x 21 x 44.6				91043900	ø 203.2 x 38	⊕ rear drum brake
								Lkh		97013500		⊕ rear drum brake
										83043900	bore ø 19 ø 203.2 x 38	
										92060800	ø 239 x 10 x 48.1	⊕ rear disc brake
										94017600	ø 203,0 x 45.5	⊕ rear drum brake
		618200	Luc		2151503	[+] 21515 18		Ake		2131201	[+] 21312 13	⊕ rear disc brake
1.8	02/00→05/05	86 / 117										
2.0 V6	02/00→05/05	110 / 150	Luc		82058500		⊖ ABS	Ake		82028400		⊕ rear disc brake
					92090100	ø 262 x 13 x 44.6		Ake		82063000		
				PRO	92060903	ø 262 x 21 x 44.6				91043900	ø 203.2 x 38	⊕ rear drum brake
								Lkh		97013500		⊕ rear drum brake
										92060800	ø 239 x 10 x 48.1	⊕ rear disc brake
										94017600	ø 203,0 x 45.5	⊕ rear drum brake
45 Stufenheck (RT) 02/00→05/05 → 45 Saloon (RT), Page 998												
75 (RJ) 02/99→05/05												
		618300	Ate		2311203	[o] 23112 19.1		Ate		2193402	[o] 21934 17.3	
1.8	02/99→05/05	88 / 120										
1.8 Turbo	05/03→05/05	110 / 150			98026500	L1120		Ate	epad	2193481	[o] 21934 17.3	
2.0 CDT	02/99→05/05	85 / 115										
2.0 CDTi	02/03→05/05	96 / 131										
2.0 V6	02/99→05/05	110 / 150	Ate		82032000					98026600	L850	
2.5 V6	02/99→10/01	129 / 175										
2.5 V6	10/01→05/05	130 / 177	Ate		82062900			Ate		82028700		
					92103400	ø 284 x 22 x 38.2		Ate		82062900		
										92103500	ø 280 x 10 x 61.8	
										91060300	ø 160 x 20	
										97036100		
		618400	Ate		2318302	[o] 23183 20.3		Ate		2193402	[o] 21934 17.3	
4.6 V8	10/04→05/05	191 / 260	Ate	epad	2318381	[o] 23183 20.3		Ate	epad	2193481	[o] 21934 17.3	
			Ate		82028600			Ate		82028700		
			Ate		82062900			Ate		82062900		
				PRO	92170303	ø 325 x 25 x 35						
75 Saloon (RJ) 02/99→05/05 → 75 (RJ), Page 998												
75 Stufenheck (RJ) 02/99→05/05 → 75 (RJ), Page 998												
75 Tourer (RJ) 08/01→05/05												
		618500	Ate		2311203	[o] 23112 19.1		Ate		2193402	[o] 21934 17.3	
1.8	08/01→05/05	88 / 120										
1.8 Turbo	05/03→05/05	110 / 150			98026500	L1120		Ate	epad	2193481	[o] 21934 17.3	
2.0 CDT	08/01→05/05	85 / 115										

kW / hp

75 Tourer (RJ) 08/01→05/05

2.0 CDTi	02/03→05/05	96 / 131	Ate		82032000					98026600	L850	
2.0 V6	08/01→05/05	110 / 150	Ate		82062900				Ate	82028700		
2.5 V6	08/01→05/05	130 / 175			92103400	ø 284 x 22 x 38.2			Ate	82062900		
										92103500	ø 280 x 10 x 61.8	
										91060300	ø 160 x 20	
										97036100		
		618600	Ate		2318302	[o] 23183 20.3			Ate	2193402	[o] 21934 17.3	
4.6 V8	10/03→05/05	191 / 260	Ate	epad	2318381	[o] 23183 20.3			Ate	2193481	[o] 21934 17.3	
			Ate		82028600				Ate	82028700		
			Ate		82062900				Ate	82062900		
				PRO	92170303	ø 325 x 25 x 35						

200 (RF) 11/95→03/00

		618700	Luc		2151503	[+] 21515 18			Ake	2131201	[+] 21312 13	⊕ rear disc brake
211	01/98→03/00	44 / 60			92070600	ø 262 x 22 x 47.4			Ake	82028400		⊕ rear disc brake
									Ake	82063000		
										91043900	ø 203.2 x 38	⊕ rear drum brake
									Lkh	97030600		⊕ rear drum brake
										92060800	ø 239 x 10 x 48.1	⊕ rear disc brake
										94017600	ø 203,0 x 45.5	⊕ rear drum brake
		618800	Luc		2151503	[+] 21515 18			Ake	2131201	[+] 21312 13	⊕ rear disc brake
214 i	11/95→03/00	55 / 75			92090100	ø 262 x 13 x 44.6			Ake	82028400		⊕ rear disc brake
214 Si	11/95→03/00	76 / 103			92070600	ø 262 x 22 x 47.4	⊕ ABS		Ake	82063000		
				PRO	92060903	ø 262 x 21 x 44.6				91043900	ø 203.2 x 38	⊕ rear drum brake
									Lkh	97030600		⊕ rear drum brake
										83043900	bore ø 19 ø 203.2 x 38	⊕ rear drum brake
										92060800	ø 239 x 10 x 48.1	⊕ rear disc brake
										94017600	ø 203,0 x 45.5	⊕ rear drum brake
		618900	Luc		2151503	[+] 21515 18			Ake	2131201	[+] 21312 13	⊕ rear disc brake
216 Si	11/95→03/00	82 / 112			92090100	ø 262 x 13 x 44.6			Ake	82028400		⊕ rear disc brake
218 K Vi	11/95→03/00	107 / 146			92070600	ø 262 x 22 x 47.4	⊕ ABS		Ake	82063000		
218 Si	08/99→03/00	88 / 120		PRO	92060903	ø 262 x 21 x 44.6				91043900	ø 203.2 x 38	⊕ rear drum brake
220 D/SD	11/95→03/00	63 / 86							Lkh	97030600		⊕ rear drum brake
220 SDi	11/95→03/00	77 / 105								92060800	ø 239 x 10 x 48.1	⊕ rear disc brake
										94017600	ø 203,0 x 45.5	⊕ rear drum brake

200 Coupe (XW) 10/92→06/99

		619000	Luc		2151503	[+] 21515 18	⊕ ABS →12/95 01/96→		Ake	2131201	[+] 21312 13	⊕ rear disc brake
216	10/92→06/99	90 / 122	Luc		2152001	[+] 21520 18	→12/95		Ake	82028400		⊕ rear disc brake
			Luc		82058500		→12/95 ⊖ ABS		Ake	82063000		
					92070500	ø 238 x 13.5 x 47.5	→12/95			91043900	ø 203.2 x 38	⊕ rear drum brake
					92070600	ø 262 x 22 x 47.4	⊕ ABS →12/95 01/96→		Lkh	97030600		⊕ rear drum brake

R - S

		kW / hp										
200 Coupe (XW) 10/92→06/99												
		619000										
216	10/92→06/99	90 / 122								83043900	bore ø 19 ø 203.2 x 38	⊕ rear drum brake
										92060800	ø 239 x 10 x 48.1	⊕ rear disc brake
										94017600	ø 203,0 x 45.5	⊕ rear drum brake
		619100	Luc		2151503	[+] 21515 18		Ake		2131201	[+] 21312 13	⊕ rear drum brake
220 GSi	05/94→06/99	100 / 136										
220 Turbo	10/92→06/99	147 / 200			92070600	ø 262 x 22 x 47.4		Ake		82028400		⊕ rear disc brake
								Ake		82063000		
										91043900	ø 203.2 x 38	⊕ rear drum brake
								Lkh		97030600		⊕ rear drum brake
										92060800	ø 239 x 10 x 48.1	⊕ rear disc brake
										94017600	ø 203,0 x 45.5	⊕ rear drum brake
400 (RT) 05/95→03/00												
		619200	Luc		2151503	[+] 21515 18		Ake		2131201	[+] 21312 13	⊕ rear disc brake
414	03/96→12/99	55 / 75										
414 Si	05/95→03/00	76 / 103			92090100	ø 262 x 13 x 44.6		Ake		82048500		⊕ rear disc brake
416 Si	05/95→03/00	82 / 112										
416 Si	05/95→03/00	83 / 113		PRO	92060903	ø 262 x 21 x 44.6		Ake		82063000		
416 Si	05/95→03/00	85 / 116								91043900	ø 203.2 x 38	⊕ rear drum brake
420 D	11/95→03/00	63 / 86						Lkh		97030600		
420 Di	05/95→03/00	77 / 105								83043900	bore ø 19 ø 203.2 x 38	
										92060800	ø 239 x 10 x 48.1	⊕ rear disc brake
										94017600	ø 203,0 x 45.5	⊕ rear drum brake
		619300	Luc		2151503	[+] 21515 18		Ake		2131201	[+] 21312 13	⊕ rear disc brake
420 Si Lux	12/95→03/00	100 / 136			92090100	ø 262 x 13 x 44.6		Ake		82048500		⊕ rear disc brake
				PRO	92060903	ø 262 x 21 x 44.6		Ake		82063000		
										91043900	ø 203.2 x 38	⊕ rear drum brake
								Lkh		97030600		
										92060800	ø 239 x 10 x 48.1	⊕ rear disc brake
										94017600	ø 203,0 x 45.5	⊕ rear drum brake
400 Hatchback (RT) 05/95→03/00												
		619400	Luc		2151503	[+] 21515 18		Ake		2131201	[+] 21312 13	⊕ rear disc brake
414 Si	05/95→03/00	76 / 103										
416 Si	05/95→03/00	82 / 112			92090100	ø 262 x 13 x 44.6		Ake		82048500		⊕ rear disc brake
416 Si	06/95→03/00	83 / 113										
420 D	11/95→03/00	63 / 86		PRO	92060903	ø 262 x 21 x 44.6		Ake		82063000		
420 Di	05/95→03/00	77 / 105								91043900	ø 203.2 x 38	⊕ rear drum brake
								Lkh		97030600		
										83043900	bore ø 19 ø 203.2 x 38	→AD74464 ⊖ ABS
										92060800	ø 239 x 10 x 48.1	⊕ rear disc brake
										94017600	ø 203,0 x 45.5	⊕ rear drum brake
		619500	Luc		2151503	[+] 21515 18		Ake		2131201	[+] 21312 13	⊕ rear disc brake
416 Si	06/95→03/00	85 / 116										
					92090100	ø 262 x 13 x 44.6		Ake		82048500		⊕ rear disc brake
				PRO	92060903	ø 262 x 21 x 44.6		Ake		82063000		
										91043900	ø 203.2 x 38	⊕ rear drum brake
								Lkh		97030600		

		kW / hp									
400 Hatchback (RT) 05/95→03/00											
		619500							83043900	bore ø 19 ø 203.2 x 38	
416 Si	06/95→03/00	85 / 116							92060800	ø 239 x 10 x 48.1	⊕ rear disc brake
									94017600	ø 203,0 x 45.5	⊕ rear drum brake
		619600	Luc		2151503	[+] 21515 18		Ake	2131201	[+] 21312 13	⊕ rear disc brake
420 Si Lux	12/95→03/00	100 / 136			92090100	ø 262 x 13 x 44.6		Ake	82048500		⊕ rear disc brake
				PRO	92060903	ø 262 x 21 x 44.6		Ake	82063000		
									91043900	ø 203.2 x 38	⊕ rear drum brake
								Lkh	97030600		
									92060800	ø 239 x 10 x 48.1	⊕ rear disc brake
									94017600	ø 203,0 x 45.5	⊕ rear drum brake
400 Schrägheck (RT) 05/95→03/00 → 400 Hatchback (RT), Page 1000											
600 (RH) 08/93→02/99											
		619700	Ake		2165101	[+] 21651 17.3	Akebono	Ake	2171901	[+] 21719 14.6	
618 i/Si	03/96→02/99	85 / 115									
620 Sdi	12/94→02/99	77 / 105	Ake		2187901	[+] 21879 18.5	Akebono	Ake	82063000		
620 Si	08/93→02/99	96 / 131									
620 Ti Vitesse	07/94→02/99	147 / 200									
623 Si	08/93→02/99	116 / 158	Ake		82058100		optional		92081700	ø 260 x 10 x 48.6	
			Ake		82060700		optional				
					92081500	ø 259 x 23 x 34	Lucas				
					92081600	ø 282 x 23 x 34	Akebono				
800 (XS) 02/88→02/99											
		619800	Luc		2151503	[+] 21515 18	01/93→	Luc	2168202	[+] 21682 14.5	
820 16V Turbo (RS)	01/92→02/99	132 / 180	Luc		2499601	[+] 24996 17.4	→12/92				
		619900	Ake		2144601	[+] 21446 17.5	Akebono →02/92	Luc	2168202	[+] 21682 14.5	03/92→
820 I/SI (RS)	01/92→02/99	100 / 136	Luc		2151503	[+] 21515 18	03/92→	Luc	2008701	[+] 20087 14	Lucas →02/92
			Luc		2124501	[+] 21245 17.4	Lucas →02/92		82512500		Lucas →02/92
			Luc		82061100		Lucas →02/92				
		620000	Luc		2151503	[+] 21515 18	03/92→	Luc	2168202	[+] 21682 14.5	03/92→
825 D/SD (XS)	01/90→02/99	87 / 118	Luc		2124501	[+] 21245 17.4	→02/92	Luc	2008701	[+] 20087 14	→02/92
			Luc		82061100		→02/92		82512500		→02/92
		620100	Luc		2151503	[+] 21515 18		Luc	2168202	[+] 21682 14.5	
825 Si Lux (RS)	04/96→02/99	129 / 175									
		620200	Luc		2151503	[+] 21515 18	03/92→	Luc	2168202	[+] 21682 14.5	03/92→
827 SI/Sterling (XS) CAT	02/88→02/99	124 / 169						Luc	2008701	[+] 20087 14	Lucas →02/92
									82512500		Lucas →02/92
800 Coupe 08/92→02/99											
		620300	Luc		2151503	[+] 21515 18		Luc	2168202	[+] 21682 14.5	
825 SD	09/93→02/99	87 / 118									
825 Si (RS)	04/96→02/99	129 / 175									
827 24V (RS)	08/92→02/99	124 / 169									
800 Hatchback (XS) 01/92→02/99											
		620400	Luc		2151503	[+] 21515 18	01/93→	Luc	2168202	[+] 21682 14.5	
820 16V Turbo (RS)	01/92→02/99	132 / 180	Luc		2499601	[+] 24996 17.4	→12/92				
		620500	Luc		2151503	[+] 21515 18		Luc	2168202	[+] 21682 14.5	
820 I/SI (XS)	01/93→02/99	100 / 136									
		620600	Luc		2151503	[+] 21515 18	03/92→	Luc	2168202	[+] 21682 14.5	03/92→
825 D/SD (XS)	01/92→02/99	87 / 118	Luc		2124501	[+] 21245 17.4	→02/92	Luc	2008701	[+] 20087 14	→02/92
			Luc		82061100		→02/92		82512500		→02/92

R-S

		kW / hp											
800 Hatchback (XS) 01/92→02/99													
		620700	Luc		2151503	[+] 21515 18	03/92→	Luc		2168202	[+] 21682 14.5	03/92→
827 24V I/SI (RS) CAT	01/92→02/99	124 / 169	Luc		2499601	[+] 24996 17.4	→12/92	Luc		2008701	[+] 20087 14	Lucas →02/92
										82512500		Lucas →02/92
800 Schrägheck (XS) 01/92→02/99 → 800 Hatchback (XS), Page 1001												
CABRIOLET (XW) 01/92→11/99												
		620800	Luc		2151503	[+] 21515 18	⊕ ABS →12/95 01/96→	Ake		2131201	[+] 21312 13	⊕ rear disc brake
214 1.4	01/92→11/99	66 / 90										
214 1.4i 16V	01/93→11/99	76 / 103										
216 1.6i	01/92→11/99	90 / 122	Luc		2152001	[+] 21520 18	→12/95	Ake		82063000		
			Luc		82058500		→12/95 ⊖ ABS			91043900	ø 203.2 x 38	⊕ rear drum brake
					92070500	ø 238 x 13.5 x 47.5	→12/95	Lkh		97030600		
					92070600	ø 262 x 22 x 47.4	⊕ ABS →12/95 01/96→			83043900	bore ø 19 ø 203.2 x 38	⊕ rear drum brake
										92060800	ø 239 x 10 x 48.1	⊕ rear disc brake
										94017600	ø 203,0 x 45.5	⊕ rear drum brake
		620900	Luc		2151503	[+] 21515 18		Ake		2131201	[+] 21312 13	⊕ rear disc brake
216 1.6i 16V	01/96→11/99	82 / 111			92090100	ø 262 x 13 x 44.6		Ake		82063000		
					92070600	ø 262 x 22 x 47.4	⊕ ABS			91043900	ø 203.2 x 38	⊕ rear drum brake
				PRO	92060903	ø 262 x 21 x 44.6		Lkh		97030600		
										83043900	bore ø 19 ø 203.2 x 38	⊕ rear drum brake
										92060800	ø 239 x 10 x 48.1	⊕ rear disc brake
										94017600	ø 203,0 x 45.5	⊕ rear drum brake
CITYROVER 01/04→06/05												
		621000			2455501	[–] 24555 16				91039001	ø 200 x 32	⊕ rear drum brake
1.4 Elegance	01/04→06/05	62 / 84	Luc		82061100							
					92158900	ø 231 x 20 x 40.5						
COUPE 03/96→11/99												
		621100	Luc		2151503	[+] 21515 18		Ake		2131201	[+] 21312 13	⊕ ABS
1.6 16 V	03/96→11/99	82 / 111	Luc		82058500		⊖ ABS	Ake		82028400		⊕ ABS
			Luc		82061100		⊕ ABS	Ake		82063000		
					92090100	ø 262 x 13 x 44.6	⊖ ABS			91043900	ø 203.2 x 38	⊖ ABS
				PRO	92060903	ø 262 x 21 x 44.6	⊕ ABS	Lkh		97013500		⊖ ABS
										92060800	ø 239 x 10 x 48.1	⊕ ABS
										94017600	ø 203,0 x 45.5	⊖ ABS
		621200	Luc		2151503	[+] 21515 18		Ake		2131201	[+] 21312 13	
1.8 16 V	03/96→11/99	107 / 145	Luc		82061100			Ake		82028400		
				PRO	92060903	ø 262 x 21 x 44.6		Ake		82063000		
										92060800	ø 239 x 10 x 48.1	
MINI 01/92→11/00												
		621300	Lkh		2003801	[–] 20038 13.8	disc-/drum brake	Lkh		91005700	ø 177.8 x 32	
1.3 Cooper S	11/96→11/00	63 / 86	Lkh		82042600			Lkh		97001300		
1300	10/92→11/00	37 / 50	Lkh		97001300					94017100	ø 177,8 x 47.5	
					92092600	ø 213 x 9.5 x 61.1				94017200	ø 177,8 x 47.5	⊕ S
					94017100	ø 177,8 x 47.5	drum brake					

		kW / hp										
MINI 01/92→11/00												
		621400	Lkh		2003801	[–] 20038 13.8	disc-/drum brake	Lkh		91005700	ø 177.8 x 32	
1300	01/92→11/00	46 / 63	Lkh		82042600			Lkh		97001300		
			Lkh		97001300					83005700	bore ø 19 ø 177.8 x 32	
					92092600	ø 213 x 9.5 x 61.1				94017100	ø 177,8 x 47.5	
					94017100	ø 177,8 x 47.5	drum brake			94017200	ø 177,8 x 47.5	⊕ S
MINI Cabriolet (XN) 11/96→05/01 → MINI Convertible (XN), Page 1003												
MINI Convertible (XN) 11/96→05/01												
		621500	Lkh		2003801	[–] 20038 13.8	disc-/drum brake	Lkh		91005700	ø 177.8 x 32	
1.3	11/96→05/01	63 / 86	Lkh		82042600			Lkh		97001300		
1.3 S	02/98→05/01	46 / 63	Lkh		97001300					94017100	ø 177,8 x 47.5	
					92092600	ø 213 x 9.5 x 61.1				94017200	ø 177,8 x 47.5	⊕ S
					94017100	ø 177,8 x 47.5	drum brake					
MINI-MOKE 09/86→												
		621600	Lkh		2003801	[–] 20038 13.8	disc-/drum brake	Lkh		91005700	ø 177.8 x 32	
1.0	09/86→	26 / 35	Lkh		82042600			Lkh		97001300		
1.0	09/86→	29 / 40	Lkh		97001300					94017100	ø 177,8 x 47.5	
					92092600	ø 213 x 9.5 x 61.1				94017200	ø 177,8 x 47.5	⊕ S
					94017100	ø 177,8 x 47.5	drum brake					
STREETWISE 08/03→05/05												
		621700	Luc		2151503	[+] 21515 18		Ake		2131201	[+] 21312 13	⊕ rear disc brake
1.4	08/03→05/05	62 / 84	Luc		82058500			Ake		82028400		⊕ rear disc brake
					92090100	ø 262 x 13 x 44.6		Ake		82063000		
										91043900	ø 203.2 x 38	⊕ rear drum brake
								Lkh		97030600		
										92060800	ø 239 x 10 x 48.1	⊕ rear disc brake
										94017600	ø 203,0 x 45.5	⊕ rear drum brake
		621800	Luc		2151503	[+] 21515 18		Ake		2131201	[+] 21312 13	⊕ rear disc brake
1.4	08/03→05/05	76 / 103										
1.6	01/04→05/05	80 / 109	Luc		82061100			Ake		82028400		⊕ rear disc brake
1.8	08/03→05/05	86 / 117		PRO	92060903	ø 262 x 21 x 44.6		Ake		82063000		
2.0 TD	08/03→05/05	74 / 101								91043900	ø 203.2 x 38	⊕ rear drum brake
								Lkh		97030600		
										92060800	ø 239 x 10 x 48.1	⊕ rear disc brake
										94017600	ø 203,0 x 45.5	⊕ rear drum brake

		kW / hp										
9-2X Estate 09/04→12/06												
		621900	Tok		2386501	[+] 23865 16.4		Ake		2357202	[+] 23572 13.8	
2.0 AWD	09/04→12/05	169 / 230			92139500	ø 294 x 24 x 56.7				92082000	ø 265.5 x 10 x 67.4	
2.5 AWD	09/04→12/06	123 / 167		PRO	92094603	ø 276.5 x 24 x 56.8						
9-2X Kombi 09/04→12/06 → 9-2X Estate, Page 1003												

		kW / hp									
9-3 (YS3D) 02/98→09/02											
622000			Ate	2311701	[+] 23117 20.2		Ate	2105002	[–] 21050 15.2	
2.0 i	02/98→09/02	96 / 131	Ate	82032000			Ate	82025700		
2.0 Turbo	02/98→09/02	136 / 185	Ate	82062900			Ate	82062900		
2.0 Turbo	01/01→09/02	110 / 150	PRO	92075603	ø 288 x 25 x 42		PRO	92075703	ø 286 x 10 x 69.2	
2.2 TiD	02/98→11/00	85 / 115		TPM0007				91018400	ø 160 x 24.5	
2.2 TiD	11/00→09/02	92 / 125						97008400		
2.3	09/99→01/02	169 / 230								
2.3 i	02/98→09/02	110 / 150								
622100			Ate	2311701	[+] 23117 20.2		Ate	2105002	[–] 21050 15.2	
2.0 SE Turbo	02/98→09/02	147 / 200	Ate	82032000			Ate	82025700		
2.0 Turbo	10/98→09/02	113 / 154	Ate	82062900			Ate	82062900		
2.0 Turbo	10/99→09/02	151 / 205	PRO	92075603	ø 288 x 25 x 42	⊖ sports susp.	PRO	92075703	ø 286 x 10 x 69.2	
2.3 Turbo	10/98→09/02	165 / 224	PRO	92110903	ø 308 x 25 x 42	⊕ sports susp.		91018400	ø 160 x 24.5	
				TPM0007				97008400		
9-3 (YS3F) 09/02→											
622200			Ate	2391201	[–] 23912 18.5	17" -brake	Ate	2413701	[–] 24137 16.7	
1,8t	09/02→	110 / 150	Ate	2022401	[o] 20224 20.9	16"+ -brake	Ate	2413781	[–] 24137 16.7	
1,8t BioPower	05/09→	129 / 175	Ate	2340404	[o] 23404 20.4	16" -brake →41022027	Ate	82062900		
1.8 i	01/04→	90 / 122	Ate	2373807	[o] 23738 20.6	15" -brake 16" -brake	Ate	82503500		
1.9 TiD	09/04→	88 / 120	Ate	2415501	[o] 24155 20.6	51046734→ 15" -brake 16" -brake	PRO	92118503	ø 278 x 12 x 41.5	15" -brake
1.9 TiD	09/04→	110 / 150	Ate	82032000		51046734→ 56012432→ 15" -brake 16" -brake	PRO	92118403	ø 292 x 20 x 41.5	16" -brake
1.9 TTiD	12/07→	118 / 160	Ate	82055100		→51046733 →56012431 15" -brake		TPM0008		
1.9 TTiD	12/07→	132 / 180	Ate	82062900						
2.0 t	09/02→	129 / 175	Ate	82071800		16"+ -brake 17" -brake				
2.0 t	09/02→	154 / 210	Ate	82501200		16" -brake →51046733 →56012431				
2.0 t	05/09→	177 / 241	PRO	92118303	ø 302 x 28 x 45	16" -brake				
2.0 t BioPower	09/02→	154 / 210	PRO	92118703	ø 285 x 25 x 41.9	15" -brake				
2.0 t BioPower	01/07→	129 / 175	PRO	92118803	ø 314 x 28 x 44.9	16"+ -brake				
2.0 t BioPower	05/09→	147 / 200	PRO	92242403	ø 345 x 30 x 45.4	17" -brake				
2.2 TiD	09/02→	92 / 125		TPM0007						
2.8 Turbo V6	03/05→	169 / 230								
2.8 Turbo V6	03/05→	184 / 250								
2.8 Turbo V6	12/07→	188 / 256								
622300			Ate	2340404	[o] 23404 20.4	16" -brake	Ate	2413701	[–] 24137 16.7	
1,8t BioPower	01/07→	110 / 150	Ate	2373807	[o] 23738 20.6		Ate	2413781	[–] 24137 16.7	
2.0 Turbo Performance	04/04→	185 / 252	Ate	82062900			Ate	82062900		
			PRO	92118303	ø 302 x 28 x 45		Ate	82503500		
							PRO	92118403	ø 292 x 20 x 41.5	
622400			Ate	2391201	[–] 23912 18.5	17" -brake	Ate	2413701	[–] 24137 16.7	
1.9 TTiD	12/07→	96 / 130	Ate	2022401	[o] 20224 20.9	16"+ -brake	Ate	2413781	[–] 24137 16.7	
2.0 t	01/07→	120 / 163	Ate	2340404	[o] 23404 20.4	16" -brake →41022027	Ate	82503500		
2.0 t	01/11→	162 / 220	Ate	2373807	[o] 23738 20.6	15" -brake 16" -brake	PRO	92118503	ø 278 x 12 x 41.5	15" -brake
2.0 t Bio Power	01/07→	120 / 163	Ate	2415501	[o] 24155 20.6	51046734→ 15" -brake 16" -brake	PRO	92118403	ø 292 x 20 x 41.5	16" -brake
2.0 t Bio Power	01/11→	162 / 220	Ate	82032000		51046734→ 56012432→ 15" -brake 16" -brake		TPM0008		
			Ate	82055100		→51046733 →56012431 15" -brake				

kW / hp

9-3 (YS3F) 09/02→

622400													
1.9 TTiD	12/07→	96 / 130	Ate		82071800		16" + -brake 17" -brake						
2.0 t	01/07→	120 / 163											
2.0 t	01/11→	162 / 220	Ate		82501200		16" -brake →51046733 →56012431						
2.0 t Bio Power	01/07→	120 / 163											
2.0 t Bio Power	01/11→	162 / 220		PRO	92118303	ø 302 x 28 x 45	16" -brake						
				PRO	92118703	ø 285 x 25 x 41.9	15" -brake						
				PRO	92118803	ø 314 x 28 x 44.9	16" + -brake						
				PRO	92242403	ø 345 x 30 x 45.4	17" -brake						
					TPM0007								
622500			Ate		2022401	[o] 20224 20.9		Ate		2413701	[–] 24137 16.7		
2.0 t BioPower	06/07→	145 / 197	Ate		82062900			Ate	epad	2413781	[–] 24137 16.7		
				PRO	92118303	ø 302 x 28 x 45	⊖ sports susp. 16" -brake ⊕ USA ⊕ CDN	Ate		82062900			
				PRO	92118803	ø 314 x 28 x 44.9	⊕ sports susp. 16" + -brake ⊖ USA ⊖ CDN	Ate		82503500			
									PRO	92118503	ø 278 x 12 x 41.5		
									PRO	92118403	ø 292 x 20 x 41.5		
622600			Ate		2391201	[–] 23912 18.5	17" -brake	Ate		2413701	[–] 24137 16.7		
2.0 t BioPower XWD	01/08→	120 / 163											
2.0 t BioPower XWD	01/08→	154 / 210	Ate		2022401	[o] 20224 20.9	16" + -brake	Ate	epad	2413781	[–] 24137 16.7		
2.0 t XWD	01/07→	120 / 163	Ate		2340404	[o] 23404 20.4	16" -brake →41022027	Ate		82062900			
			Ate		2373807	[o] 23738 20.6	15" -brake 16" -brake	Ate		82503500			
			Ate		2415501	[o] 24155 20.6	51046734→ 15" -brake 16" -brake		PRO	92118503	ø 278 x 12 x 41.5	15" -brake	
			Ate		82032000		51046734→ 56012432→ 15" -brake 16" -brake		PRO	92118403	ø 292 x 20 x 41.5	16" + -brake MY 2006→	
			Ate		82055100		→51046733 →56012431 15" -brake			TPM0008			
			Ate		82062900								
			Ate		82071800		16" + -brake 17" -brake						
			Ate		82501200		16" -brake →51046733 →56012431						
				PRO	92118303	ø 302 x 28 x 45	16" -brake						
				PRO	92118703	ø 285 x 25 x 41.9	15" -brake						
				PRO	92118803	ø 314 x 28 x 44.9	16" + -brake						
				PRO	92242403	ø 345 x 30 x 45.4	17" -brake						
					TPM0007								
622700			Ate		2391201	[–] 23912 18.5	17" -brake	Ate		2413701	[–] 24137 16.7		
2.0 t BioPower XWD	01/08→	162 / 220											
2.0 t XWD	01/08→	162 / 220	Ate		2022401	[o] 20224 20.9	16" + -brake	Ate	epad	2413781	[–] 24137 16.7		
2.8 Turbo V6 XWD	05/08→	206 / 280	Ate		2340404	[o] 23404 20.4	16" -brake →41022027	Ate		82503500			
			Ate		2373807	[o] 23738 20.6	15" -brake 16" -brake		PRO	92118503	ø 278 x 12 x 41.5	15" -brake	
			Ate		2415501	[o] 24155 20.6	51046734→ 15" -brake 16" -brake		PRO	92118403	ø 292 x 20 x 41.5	16" + -brake MY 2006→	
			Ate		82032000		51046734→ 56012432→ 15" -brake 16" -brake			TPM0008			
			Ate		82055100		→51046733 →56012431 15" -brake						
			Ate		82071800		16" + -brake 17" -brake						
			Ate		82501200		16" -brake →51046733 →56012431						
				PRO	92118303	ø 302 x 28 x 45	16" -brake						
				PRO	92118703	ø 285 x 25 x 41.9	15" -brake						
				PRO	92118803	ø 314 x 28 x 44.9	16" + -brake						

R-S

		kW / hp										
9-3 (YS3F) 09/02→												
622700												
2.0 t BioPower XWD	01/08→	162 / 220		PRO	92242403	ø 345 x 30 x 45.4	17" -brake					
2.0 t XWD	01/08→	162 / 220			TPM0007							
2.8 Turbo V6 XWD	05/08→	206 / 280										
622800			Ate		2391201	[–] 23912 18.5	17" -brake	Ate		2413701	[–] 24137 16.7	
2.0 Turbo XWD	01/08→	154 / 210	Ate		2022401	[o] 20224 20.9	16"+ -brake	Ate	epad	2413781	[–] 24137 16.7	
			Ate		2340404	[o] 23404 20.4	16" -brake →41022027	Ate		82062900		
			Ate		2373807	[o] 23738 20.6	15" -brake 16" -brake	Ate		82503500		
			Ate		2415501	[o] 24155 20.6	51046734→ 15" -brake 16" -brake		PRO	92118503	ø 278 x 12 x 41.5	15" -brake
			Ate		82032000		51046734→ 56012432→ 15" -brake 16" -brake		PRO	92118403	ø 292 x 20 x 41.5	16" 16"+ -brake
			Ate		82055100		→51046733 →56012431 15" -brake			TPM0008		
			Ate		82062900							
			Ate		82071800		16"+ -brake 17" -brake					
			Ate		82501200		16" -brake →51046733 →56012431					
				PRO	92118303	ø 302 x 28 x 45	16" -brake					
				PRO	92118703	ø 285 x 25 x 41.9	15" -brake					
				PRO	92118803	ø 314 x 28 x 44.9	16"+ -brake					
				PRO	92242403	ø 345 x 30 x 45.4	17" -brake					
					TPM0007							
622900			Ate		2391201	[–] 23912 18.5	17'' -brake	Ate		2413701	[–] 24137 16.7	
2.0 t XWD	05/09→	177 / 241	Ate		2340404	[o] 23404 20.4	16'' -brake 81002995→	Ate	epad	2413781	[–] 24137 16.7	
			Ate		2373807	[o] 23738 20.6	15'' -brake	Ate		82503500		
			Ate		82032000		15'' -brake		PRO	92118503	ø 278 x 12 x 41.5	16'' -brake
			Ate		82071800		16''+ -brake		PRO	92118403	ø 292 x 20 x 41.5	16'' -brake
				PRO	92118303	ø 302 x 28 x 45	16'' -brake					
				PRO	92118703	ø 285 x 25 x 41.9	15'' -brake					
				PRO	92118803	ø 314 x 28 x 44.9	16''+ -brake					
				PRO	92242403	ø 345 x 30 x 45.4	17'' -brake					
					TPM0007							
623000			Ate		2022401	[o] 20224 20.9		Ate		2413701	[–] 24137 16.7	
2.8 Turbo V6	04/08→	203 / 276		PRO	92118803	ø 314 x 28 x 44.9		Ate	epad	2413781	[–] 24137 16.7	
									PRO	92118403	ø 292 x 20 x 41.5	
9-3 Cabriolet (YS3D) 02/98→08/03												
623100			Ate		2311701	[+] 23117 20.2		Ate		2105002	[–] 21050 15.2	
2.0 i	02/98→08/03	96 / 131	Ate		82032000			Ate		82025700		
2.3	09/99→01/02	169 / 230	Ate		82062900			Ate		82062900		
2.3 i	02/98→08/03	110 / 150		PRO	92075603	ø 288 x 25 x 42			PRO	92075703	ø 286 x 10 x 69.2	
2.3 Turbo	10/99→08/03	165 / 224								91018400	ø 160 x 24.5	
										97008400		
623200			Ate		2311701	[+] 23117 20.2		Ate		2105002	[–] 21050 15.2	
2.0 SE Turbo	02/98→08/03	147 / 200	Ate		82032000			Ate		82025700		
2.0 Turbo	02/98→08/03	136 / 185	Ate		82062900			Ate		82062900		
2.0 Turbo	10/98→08/03	113 / 154										
2.0 Turbo	10/99→08/03	151 / 205										
2.0 Turbo	01/01→08/03	110 / 150										

		kW / hp									
9-3 Cabriolet (YS3D) 02/98→08/03											
		623200									
2.0 SE Turbo	02/98→08/03	147 / 200		PRO	92075603	ø 288 x 25 x 42	⊖ sports susp.		PRO	92075703	ø 286 x 10 x 69.2
2.0 Turbo	02/98→08/03	136 / 185								91018400	ø 160 x 24.5
2.0 Turbo	10/98→08/03	113 / 154		PRO	92110903	ø 308 x 25 x 42	⊕ sports susp.				
2.0 Turbo	10/99→08/03	151 / 205								97008400	
2.0 Turbo	01/01→08/03	110 / 150									
9-3 Cabriolet (YS3F) 08/03→ → 9-3 Convertible (YS3F), Page 1007											
9-3 Convertible (YS3F) 08/03→											
		623300	Ate		2391201	[–] 23912 18.5	17" -brake	Ate		2413701	[–] 24137 16.7 ⊕ CDN ⊕ USA
1,8t	08/03→	110 / 150	Ate		2022401	[o] 20224 20.9	16+" -brake ⊖ USA ⊖ CDN	Ate	epad	2413781	[–] 24137 16.7 ⊕ CDN ⊕ USA
1,8t BioPower	01/07→	110 / 150	Ate		2373807	[o] 23738 20.6	15" -brake ⊕ CDN ⊕ USA 16" -brake	Ate		82062900	
1,8t BioPower	01/07→	129 / 175	Ate		2415501	[o] 24155 20.6	16" -brake ⊖ USA ⊖ CDN	Ate		82503500	
1.9 TiD	01/06→	110 / 150	Ate		82032000		15" -brake 16" -brake 51046734→ 56012432→		PRO	92118503	ø 278 x 12 x 41.5 15" -brake
1.9 TTiD	12/07→	96 / 130	Ate		82055100		→51046733 →56012431 15" -brake		PRO	92118403	ø 292 x 20 x 41.5 16" -brake
1.9 TTiD	12/07→	118 / 160	Ate		82062900					TPM0008	
1.9 TTiD	12/07→	132 / 180	Ate		82071800		16+" -brake 17" -brake				
2.0	04/06→09/07	143 / 194	Ate		82501200		16" -brake →51043733 →56012431				
2.0 t	08/03→	129 / 175		PRO	92118303	ø 302 x 28 x 45	16" -brake				
2.0 t	08/03→	154 / 210		PRO	92118703	ø 285 x 25 x 41.9	15" -brake				
2.0 t	01/11→	120 / 163		PRO	92118803	ø 314 x 28 x 44.9	16+" -brake				
2.0 t	01/11→	162 / 220		PRO	92242403	ø 345 x 30 x 45.4	17" -brake				
2.0 t BioPower	01/07→	129 / 175			TPM0007						
2.0 t BioPower	06/07→	147 / 200									
2.0 t BioPower	01/11→	120 / 163									
2.0 t BioPower	01/11→	162 / 220									
2.0 Turbo Performance	04/04→	185 / 252									
2.8 Turbo V6	02/06→	169 / 230									
2.8 Turbo V6	02/06→	184 / 250									
2.8 Turbo V6	12/07→	188 / 256									
2.8 Turbo V6	02/09→	203 / 276									
2.8 Turbo V6	02/09→	206 / 280									
		623400	Ate		2340404	[o] 23404 20.4	16'' -brake →41022027	Ate		2413701	[–] 24137 16.7
1.8 i	01/04→	90 / 122	Ate		2373807	[o] 23738 20.6	15'' -brake →51046733	Ate	epad	2413781	[–] 24137 16.7
1.9 TiD	09/04→	88 / 120	Ate		82032000		16'' -brake 15'' -brake 51046733→ 56012431→	Ate		82503500	
			Ate		82055100		15'' -brake →51046733 →56012431		PRO	92118503	ø 278 x 12 x 41.5 15'' -brake
			Ate		82071800		16''+ -brake →41022027		PRO	92118403	ø 292 x 20 x 41.5 16'' -brake
			Ate		82501200		16'' -brake →51046733 →56012431				
				PRO	92118303	ø 302 x 28 x 45	16'' -brake 41022028→				
				PRO	92118703	ø 285 x 25 x 41.9	15'' -brake				
				PRO	92118803	ø 314 x 28 x 44.9	16''+ -brake →41022027				
					TPM0007						
9-3 Estate 03/05→											
		623500	Ate		2391201	[–] 23912 18.5	17" -brake	Ate		2413701	[–] 24137 16.7
1.8 i	03/05→	90 / 122	Ate		2022401	[o] 20224 20.9	16"+ -brake	Ate	epad	2413781	[–] 24137 16.7
2.0 t	03/05→	110 / 150	Ate		2340404	[o] 23404 20.4	16"+ -brake →41022027	Ate		82062900	
2.0 t	03/05→	129 / 175	Ate		2373807	[o] 23738 20.6	15" -brake	Ate		82503500	
2.0 t	03/05→	154 / 209	Ate		2415501	[o] 24155 20.6	16" -brake		PRO	92118503	ø 278 x 12 x 41.5 15" -brake
2.0 t BioPower	01/07→	129 / 175	Ate		82032000		15" -brake 16" -brake 51046734→ 56012432→		PRO	92118403	ø 292 x 20 x 41.5 16" -brake
			Ate		82055100		15" -brake →51046733 →56012431			TPM0008	
			Ate		82062900						
			Ate		82071800		16"+ -brake 17" -brake				
			Ate		82501200		16" -brake →51046733 →56012431				
				PRO	92118303	ø 302 x 28 x 45	16" -brake				

R - S

kW / hp

9-3 Estate 03/05→

623500													
1.8 i	03/05→	90 / 122		PRO	92118703	ø 285 x 25 x 41.9	15" -brake						
2.0 t	03/05→	110 / 150		PRO	92118803	ø 314 x 28 x 44.9	16"+ -brake						
2.0 t	03/05→	129 / 175		PRO	92242403	ø 345 x 30 x 45.4	17" -brake						
2.0 t	03/05→	154 / 209			TPM0007								
2.0 t BioPower	01/07→	129 / 175											
623600			Ate		2391201	[–] 23912 18.5	17" -brake	Ate		2413701	[–] 24137 16.7	
1.8 t	03/05→	110 / 150											
1.9 TiD	03/05→	88 / 120	Ate		2022401	[o] 20224 20.9	16"+ -brake	Ate	epad	2413781	[–] 24137 16.7	
1.9 TiD	03/05→	110 / 150											
1.9 TTiD	12/07→	132 / 180	Ate		2373807	[o] 23738 20.6	15" -brake	Ate		82062900		
2.0 t	02/09→	147 / 200											
2.0 t Bio Power	02/09→	147 / 200	Ate		2415501	[o] 24155 20.6	16" -brake	Ate		82503500		
2.8 Turbo V6	03/05→	169 / 230											
2.8 Turbo V6	03/05→	184 / 250	Ate		82032000		15" -brake 16" -brake 51046734→ 56012432→		PRO	92118503	ø 278 x 12 x 41.5	15" -brake
2.8 Turbo V6	12/07→	188 / 256											
			Ate		82055100		15" -brake →51046733 →56012431		PRO	92118403	ø 292 x 20 x 41.5	16" -brake
			Ate		82062900								
										TPM0008			
			Ate		82071800		16"+ -brake 17" -brake						
			Ate		82501200		16" -brake →51046733 →56012431						
				PRO	92118303	ø 302 x 28 x 45	16" -brake						
				PRO	92118703	ø 285 x 25 x 41.9	15" -brake						
				PRO	92118803	ø 314 x 28 x 44.9	16"+ -brake						
				PRO	92242403	ø 345 x 30 x 45.4	17" -brake						
					TPM0007								
623700			Ate		2022401	[o] 20224 20.9	⊕ sports susp. 16"+ -brake	Ate		2413701	[–] 24137 16.7	
1.8 t BioPower	01/07→	110 / 150											
			Ate		2373807	[o] 23738 20.6	⊖ sports susp.	Ate	epad	2413781	[–] 24137 16.7	
			Ate		82062900			Ate		82062900		
				PRO	92118303	ø 302 x 28 x 45	⊖ sports susp. 16" -brake	Ate		82503500		
				PRO	92118703	ø 285 x 25 x 41.9	⊖ sports susp. 15" -brake		PRO	92118503	ø 278 x 12 x 41.5	
				PRO	92118803	ø 314 x 28 x 44.9	⊕ sports susp. 16"+ -brake		PRO	92118403	ø 292 x 20 x 41.5	
623800			Ate		2391201	[–] 23912 18.5	17" -brake	Ate		2413701	[–] 24137 16.7	
1.9 TTiD	12/07→	96 / 130											
1.9 TTiD	12/07→	118 / 160	Ate		2022401	[o] 20224 20.9	16"+ -brake	Ate	epad	2413781	[–] 24137 16.7	
2.0 t	01/07→	120 / 163											
2.0 t	01/11→	162 / 220	Ate		2373807	[o] 23738 20.6	15" -brake	Ate		82503500		
2.0 t BioPower	01/11→	120 / 163											
2.0 t BioPower	01/11→	162 / 220	Ate		2415501	[o] 24155 20.6	16" -brake		PRO	92118503	ø 278 x 12 x 41.5	15" -brake
			Ate		82032000		15" -brake 16" -brake 51046734→ 56012432→		PRO	92118403	ø 292 x 20 x 41.5	16" -brake
			Ate		82055100		15" -brake →51046733 →56012431						
										TPM0008			
			Ate		82071800		16"+ -brake 17" -brake						
			Ate		82501200		16" -brake →51046733 →56012431						
				PRO	92118303	ø 302 x 28 x 45	16" -brake						
				PRO	92118703	ø 285 x 25 x 41.9	15" -brake						
				PRO	92118803	ø 314 x 28 x 44.9	16"+ -brake						
				PRO	92242403	ø 345 x 30 x 45.4	17" -brake						
					TPM0007								
623900			Ate		2022401	[o] 20224 20.9		Ate		2413701	[–] 24137 16.7	
2.0	04/06→09/07	143 / 194											
2.0 t BioPower	06/07→	145 / 197	Ate		82062900			Ate	epad	2413781	[–] 24137 16.7	
				PRO	92118303	ø 302 x 28 x 45	⊖ sports susp. 16" -brake ⊕ USA ⊕ CDN	Ate		82062900		

R-S

kW / hp

9-3 Estate 03/05→

623900													
2.0	04/06→09/07	143 / 194		PRO	92118803	ø 314 x 28 x 44.9	⊕ sports susp. 16"+ -brake ⊖ USA ⊖ CDN	Ate		82503500			
2.0 t BioPower	06/07→	145 / 197							PRO	92118503	ø 278 x 12 x 41.5		
									PRO	92118403	ø 292 x 20 x 41.5		
624000			Ate		2391201	[–] 23912 18.5	17" -brake	Ate		2413701	[–] 24137 16.7		
2.0 t	05/09→	177 / 241											
2.0 t XWD	05/09→	177 / 241	Ate		2340404	[o] 23404 20.4	16"+ -brake 81002995→	Ate	epad	2413781	[–] 24137 16.7		
			Ate		2373807	[o] 23738 20.6	16" -brake 81002995→	Ate		82503500			
			Ate		82032000		15" -brake 16" -brake		PRO	92118503	ø 278 x 12 x 41.5	15" -brake	
			Ate		82071800		17" -brake		PRO	92118403	ø 292 x 20 x 41.5	16" -brake	
				PRO	92118303	ø 302 x 28 x 45	16" -brake						
				PRO	92118703	ø 285 x 25 x 41.9	15" -brake						
				PRO	92118803	ø 314 x 28 x 44.9	16"+ -brake						
				PRO	92242403	ø 345 x 30 x 45.4	17" -brake						
					TPM0007								
624100			Ate		2391201	[–] 23912 18.5	17" -brake	Ate		2413701	[–] 24137 16.7		
2.0 t BioPower XWD	01/11→	120 / 163	Ate		2022401	[o] 20224 20.9	16"+ -brake	Ate	epad	2413781	[–] 24137 16.7		
			Ate		2373807	[o] 23738 20.6	15" -brake	Ate		82062900			
			Ate		2415501	[o] 24155 20.6	16" -brake	Ate		82503500			
			Ate		82032000		15" -brake 16" -brake 51046734→ 56012432→		PRO	92118503	ø 278 x 12 x 41.5	15" -brake	
			Ate		82055100		15" -brake →51046733 →56012431		PRO	92118403	ø 292 x 20 x 41.5	16"+ -brake MY 2006→	
			Ate		82062900					TPM0008			
			Ate		82071800		16"+ -brake 17" -brake						
			Ate		82501200		16" -brake →51046733 →56012431						
				PRO	92118303	ø 302 x 28 x 45	16" -brake						
				PRO	92118703	ø 285 x 25 x 41.9	15" -brake						
				PRO	92118803	ø 314 x 28 x 44.9	16"+ -brake						
				PRO	92242403	ø 345 x 30 x 45.4	17" -brake						
					TPM0007								
624200			Ate		2391201	[–] 23912 18.5	17" -brake	Ate		2413701	[–] 24137 16.7		
2.0 t BioPower XWD	01/11→	162 / 220											
2.0 t XWD	01/07→	120 / 163	Ate		2022401	[o] 20224 20.9	16"+ -brake	Ate	epad	2413781	[–] 24137 16.7		
2.0 t XWD	01/11→	162 / 220											
2.8 Turbo V6 XWD	05/08→	206 / 280	Ate		2373807	[o] 23738 20.6	15" -brake	Ate		82503500			
			Ate		2415501	[o] 24155 20.6	16" -brake		PRO	92118503	ø 278 x 12 x 41.5	15" -brake	
			Ate		82032000		15" -brake 16" -brake 51046734→ 56012432→		PRO	92118403	ø 292 x 20 x 41.5	16"+ -brake MY 2006→	
			Ate		82055100		15" -brake →51046733 →56012431			TPM0008			
			Ate		82071800		16"+ -brake 17" -brake						
			Ate		82501200		16" -brake →51046733 →56012431						
				PRO	92118303	ø 302 x 28 x 45	16" -brake						
				PRO	92118703	ø 285 x 25 x 41.9	15" -brake						
				PRO	92118803	ø 314 x 28 x 44.9	16"+ -brake						
				PRO	92242403	ø 345 x 30 x 45.4	17" -brake						
					TPM0007								

R-S

		kW / hp										
9-3 Estate 03/05→												
		624300	Ate		**2391201**	[–] 23912 18.5	17" -brake	Ate		**2413701**	[–] 24137 16.7	
2.0 t Bio Power XWD	06/08→	154 / 209										
2.0 t XWD	06/08→	154 / 209	Ate		**2022401**	[o] 20224 20.9	16"+ -brake	Ate		**2413781**	[–] 24137 16.7	
			Ate		**2340404**	[o] 23404 20.4	16"+ -brake →41022027	Ate		**82062900**		
			Ate		**2373807**	[o] 23738 20.6	15" -brake	Ate		**82503500**		
			Ate		**2415501**	[o] 24155 20.6	16" -brake			**92118503**	ø 278 x 12 x 41.5	15" -brake
			Ate		**82032000**		15" -brake 16" -brake 51046734→ 56012432→			**92118403**	ø 292 x 20 x 41.5	16"+ -brake MY 2006→
			Ate		**82055100**		15" -brake →51046733 →56012431			**TPM0008**		
			Ate		**82062900**							
			Ate		**82071800**		16"+ -brake 17" -brake					
			Ate		**82501200**		16" -brake →51046733 →56012431					
					92118303	ø 302 x 28 x 45	16" -brake					
					92118703	ø 285 x 25 x 41.9	15" -brake					
					92118803	ø 314 x 28 x 44.9	16"+ -brake					
					92242403	ø 345 x 30 x 45.4	17" -brake					
					TPM0007							
		624400	Ate		**2022401**	[o] 20224 20.9		Ate		**2413701**	[–] 24137 16.7	
2.8 Turbo V6	05/08→	203 / 276						Ate		**2413781**	[–] 24137 16.7	
					92118803	ø 314 x 28 x 44.9				**92118403**	ø 292 x 20 x 41.5	
9-3 Kombi 03/05→ → 9-3 Estate, Page 1007												
9-3 Saloon (YS3F) 09/02→ → 9-3 (YS3F), Page 1004												
9-3 Stufenheck (YS3F) 09/02→ → 9-3 (YS3F), Page 1004												
9-3X 02/09→												
		624500	Ate		**2391201**	[–] 23912 18.5	17" -brake Ø 345 mm	Ate		**2413701**	[–] 24137 16.7	
1.9 TTiD	02/09→	132 / 180										
2.0 t BioPower XWD	02/09→	154 / 209										
2.0 t BioPower XWD	01/11→	162 / 220	Ate		**2022401**	[o] 20224 20.9	16+" -brake Ø 314 mm	Ate		**2413781**	[–] 24137 16.7	
2.0 t XWD	02/09→	154 / 209										
			Ate		**2373807**	[o] 23738 20.6	15" -brake Ø 285 mm	Ate		**82503500**		
							16" -brake Ø 302 mm ⊕ USA ⊕ CDN					
			Ate		**2415501**	[o] 24155 20.6	16" -brake Ø 302 mm ⊖ USA ⊖ CDN			**92118503**	ø 278 x 12 x 41.5	15" -brake
			Ate		**82071800**		16" + 17" -brake			**92118403**	ø 292 x 20 x 41.5	16"/16+" -brake
					92118303	ø 302 x 28 x 45	16" -brake			**TPM0008**		
					92118703	ø 285 x 25 x 41.9	15" -brake					
					92118803	ø 314 x 28 x 44.9	16+" -brake					
					92242403	ø 345 x 30 x 45.4	17" -brake					
					TPM0007							
9-3X Estate 02/09→ → 9-3X, Page 1010												
9-3X Kombi 02/09→ → 9-3X, Page 1010												
9-5 (YS3E) 09/97→												
		624600	Ate		**2311701**	[+] 23117 20.2		Ate		**2309102**	[–] 23091 15.2	→X3025751
1.9 TiD	01/06→	110 / 150										
2.0 t	09/97→	110 / 150										
2.0 t	07/00→	136 / 185	Ate		**82032000**			Ate		**2193404**	[o] 21934 16.3	X3025752→
2.0 t Biopower	09/05→	132 / 179										
2.0 t BioPower	01/05→	110 / 150	Ate		**82062900**			Ate		**82025700**		→X3025751
2.0 Turbo SE	10/98→07/00	141 / 192										
2.2 TiD	03/02→	88 / 120										
2.3 t	09/97→	125 / 170			**92075603**	ø 288 x 25 x 42		Ate		**82029300**		X3025752→
2.3 t	01/01→	136 / 185										
2.3 Turbo	06/03→08/05	224 / 305			**92110903**	ø 308 x 25 x 42	⊕ rim size 16"	Ate		**82062900**		X3025752→
										92100200	ø 286 x 10 x 69	X3025752→
										92075703	ø 286 x 10 x 69.2	→X3025751

		kW / hp									
9-5 (YS3E) 09/97→											
		624600									
1.9 TiD	01/06→	110 / 150						**91018400**	ø 160 x 24.5	
2.0 t	09/97→	110 / 150						**97008400**		
2.0 t	07/00→	136 / 185								
2.0 t Biopower	09/05→	132 / 179								
2.0 t BioPower	01/05→	110 / 150								
2.0 Turbo SE	10/98→07/00	141 / 192								
2.2 TiD	03/02→	88 / 120								
2.3 t	09/97→	125 / 170								
2.3 t	01/01→	136 / 185								
2.3 Turbo	06/03→08/05	224 / 305								
		624700	Ate		**2311701**	[+] 23117 20.2		Ate	**2309102**	[–] 23091 15.2	→X3025751
2.3 t BioPower	11/06→	152 / 207	Ate		**82032000**			Ate	**2193404**	[o] 21934 16.3	X3025752→
2.3 Turbo	04/08→	188 / 256	Ate		**82062900**			Ate	**82025700**		→X3025751
3.0 TiD	07/01→	130 / 177		PRO	**92075603**	ø 288 x 25 x 42		Ate	**82029300**		X3025752→
				PRO	**92110903**	ø 308 x 25 x 42	⊕ rim size 16"	Ate	**82062900**		X3025752→
									92100200	ø 286 x 10 x 69	X3025752→
									92075703	ø 286 x 10 x 69.2	→X3025751
									92164900	ø 300 x 20 x 69.1	
									91018400	ø 160 x 24.5	
									97008400		
		624800	Ate		**2311701**	[+] 23117 20.2		Ate	**2309102**	[–] 23091 15.2	→X3025751
2.3 t BioPower	01/07→	136 / 185	Ate		**82032000**			Ate	**2193404**	[o] 21934 16.3	X3025752→
2.3 Turbo	04/08→	134 / 182	Ate		**82062900**			Ate	**82025700**		→X3025751
				PRO	**92075603**	ø 288 x 25 x 42		Ate	**82029300**		X3025752→
				PRO	**92110903**	ø 308 x 25 x 42	⊕ rim size 16"	Ate	**82062900**		X3025752→
									92100200	ø 286 x 10 x 69	
									91018400	ø 160 x 24.5	
									97008400		
		624900	Ate		**2311502**	[o] 23115 19.6	⊕ USA ⊕ CDN	Ate	**2309102**	[–] 23091 15.2	→X3025751
2.3 Turbo	10/99→09/01	169 / 230	Ate		**2311701**	[+] 23117 20.2	⊖ USA ⊖ CDN	Ate	**2193404**	[o] 21934 16.3	X3025752→
2.3 Turbo	07/03→	162 / 220	Ate		**82032000**			Ate	**82025700**		→X3025751
			Ate		**82062900**			Ate	**82029300**		X3025752→
				PRO	**92075603**	ø 288 x 25 x 42		Ate	**82062900**		X3025752→
				PRO	**92110903**	ø 308 x 25 x 42	⊕ rim size 16"		**92100200**	ø 286 x 10 x 69	X3025752→
									92075703	ø 286 x 10 x 69.2	→X3025751
									91018400	ø 160 x 24.5	
									97008400		
		625000	Ate		**2311502**	[o] 23115 19.6	⊕ USA ⊕ CDN	Ate	**2309102**	[–] 23091 15.2	→X3025751
2.3 Turbo	09/01→	184 / 250	Ate		**2311701**	[+] 23117 20.2	⊖ USA ⊖ CDN	Ate	**2193404**	[o] 21934 16.3	X3025752→
2.3 Turbo	11/05→	191 / 260	Ate		**82032000**			Ate	**82025700**		→X3025751
3.0 V6t	01/98→	147 / 200	Ate		**82062900**			Ate	**82029300**		X3025752→
				PRO	**92075603**	ø 288 x 25 x 42		Ate	**82062900**		X3025752→
				PRO	**92110903**	ø 308 x 25 x 42	⊕ rim size 16"		**92100200**	ø 286 x 10 x 69	X3025752→
									92075703	ø 286 x 10 x 69.2	→X3025751
									92164900	ø 300 x 20 x 69.1	

R - S

		kW / hp											
9-5 (YS3E) 09/97→													
		625000											
2.3 Turbo	09/01→	184 / 250											
2.3 Turbo	11/05→	191 / 260											
3.0 V6t	01/98→	147 / 200											
											91018400	ø 160 x 24.5	
											97008400		
9-5 (YS3G) 05/10→													
		625100	Man		2441201	[+] 24412 19.1	17" -brake	TRW		2442101	[+] 24421 17.3	17" -brake ⊕ CDN ⊕ MEX ⊕ USA
1.6 Turbo	05/10→	132 / 180											
2.0 t BioPower	05/10→	162 / 220	Man		2441501	[+] 24415 19.1	16" -brake	TRW		2442102	[+] 24421 17.3	16" -brake 17" -brake
2.0 t BioPower XWD	05/10→	162 / 220					17" -brake ⊕ MEX ⊕ CDN ⊕ USA					
2.0 TiD	05/10→	118 / 160											
2.0 TTiD	05/10→	140 / 190	TRW		2441801	[+] 24418 17.2	17+" -brake	Luc		82503900		16" -brake 17" -brake
2.0 TTiD XWD	05/10→	140 / 190										
2.0 Turbo	05/10→	162 / 220										
2.0 Turbo XWD	05/10→	162 / 220	Man		82503800		16" -brake			82513400		17" -brake ⊕ CDN ⊕ MEX ⊕ USA
2.8 Turbo V6 XWD	05/10→	221 / 301					17" -brake ⊖ CDN ⊖ MEX ⊖ USA					
			Luc		82504200		18" -brake			92222903	ø 292 x 12 x 48	16" -brake
				PRO	92186903	ø 296 x 30 x 51	16" -brake		PRO	92187303	ø 315 x 23 x 48	17" -brake 17+" -brake 18+" -brake
				PRO	92187003	ø 321 x 30 x 50.9	17" -brake					
				PRO	92187103	ø 337 x 30 x 50.9	17+" -brake					
9-5 Estate (YS3E) 10/98→													
		625200	Ate		2311701	[+] 23117 20.2		Ate		2309102	[–] 23091 15.2	→X3025751
1.9 TiD	01/06→	110 / 150										
1.9 TiD	01/07→	129 / 175	Ate		82032000			Ate		2193404	[o] 21934 16.3	X3025752→
2.0 t	10/98→	110 / 150										
2.0 t	10/98→	141 / 192	Ate		82062900			Ate		82025700		→X3025751
2.0 t	07/00→07/01	136 / 185										
2.0 t Biopower	09/05→	132 / 179		PRO	92075603	ø 288 x 25 x 42		Ate		82029300		X3025752→
2.0 t BioPower	01/06→	110 / 150										
2.2 TiD	03/02→	88 / 120		PRO	92110903	ø 308 x 25 x 42	⊕ rim size 16"	Ate		82062900		X3025752→
2.3 t	10/98→	125 / 170										
2.3 t	01/01→	136 / 185								92100200	ø 286 x 10 x 69	X3025752→
2.3 t BioPower	01/07→	136 / 185							PRO	92075703	ø 286 x 10 x 69.2	→X3025751
2.3 Turbo	06/03→08/05	224 / 305								91018400	ø 160 x 24.5	
										97008400		
		625300	Ate		2311701	[+] 23117 20.2		Ate		2309102	[–] 23091 15.2	→X3025751
2.3 t BioPower	11/06→	152 / 207										
2.3 t BioPower	11/06→	154 / 210	Ate		82032000			Ate		2193404	[o] 21934 16.3	X3025752→
2.3 Turbo	04/08→	188 / 256										
3.0 TiD	07/01→	130 / 177	Ate		82062900			Ate		82025700		→X3025751
				PRO	92075603	ø 288 x 25 x 42		Ate		82029300		X3025752→
				PRO	92110903	ø 308 x 25 x 42	⊕ rim size 16"	Ate		82062900		X3025752→
										92100200	ø 286 x 10 x 69	X3025752→
									PRO	92075703	ø 286 x 10 x 69.2	→X3025751
										92164900	ø 300 x 20 x 69.1	
										91018400	ø 160 x 24.5	
										97008400		
		625400	Ate		2311502	[o] 23115 19.6	⊕ USA ⊕ CDN	Ate		2309102	[–] 23091 15.2	→X3025751
2.3 Turbo	10/99→09/01	169 / 230										
2.3 Turbo	07/03→	162 / 220	Ate		2311701	[+] 23117 20.2	⊖ USA ⊖ CDN	Ate		2193404	[o] 21934 16.3	X3025752→
			Ate		82032000			Ate		82025700		→X3025751
			Ate		82062900			Ate		82029300		X3025752→
				PRO	92075603	ø 288 x 25 x 42		Ate		82062900		X3025752→
				PRO	92110903	ø 308 x 25 x 42	⊕ rim size 16"			92100200	ø 286 x 10 x 69	X3025752→
									PRO	92075703	ø 286 x 10 x 69.2	→X3025751
										91018400	ø 160 x 24.5	
										97008400		

9-5 Estate (YS3E) 10/98→

		625500	kW / hp
2.3 Turbo	09/01→	184 / 250	
2.3 Turbo	01/06→	191 / 260	
3.0 V6t	10/98→	147 / 200	

Ate		2311502	[o] 23115 19.6	⊕USA ⊕CDN	Ate		2309102	[–] 23091 15.2	→X3025751
Ate		2311701	[+] 23117 20.2	⊖USA ⊖CDN	Ate		2193404	[o] 21934 16.3	X3025752→
Ate		82032000			Ate		82025700		→X3025751
Ate		82062900			Ate		82029300		X3025752→
	PRO	92075603	ø 288 x 25 x 42		Ate		82062900		X3025752→
	PRO	92110903	ø 308 x 25 x 42	⊕rim size 16"			92100200	ø 286 x 10 x 69	X3025752→
						PRO	92075703	ø 286 x 10 x 69.2	→X3025751
							92164900	ø 300 x 20 x 69.1	
							91018400	ø 160 x 24.5	
							97008400		

9-5 Kombi (YS3E) 10/98→ → 9-5 Estate (YS3E), Page 1012

9-5 Saloon (YS3E) 09/97→ → 9-5 (YS3E), Page 1010

9-5 Stufenheck (YS3E) 09/97→ → 9-5 (YS3E), Page 1010

9-7X 12/05→

		625600	kW / hp
4.2	12/05→	213 / 290	
5.3	12/05→	220 / 299	

		2444801	[+] 24448 16.8				2444501	[+] 24445 16.9	
		92226200	ø 325 x 29 x 54						

300/350 09/98→

		625700	kW / hp
1.6 D	09/98→	66 / 90	
1.6 HDi 4x4	07/06→02/11	66 / 90	
1.6 HDi 4x4	07/06→02/11	81 / 110	

Luc		2430201	[–] 24302 15.5						

PS10/ANIBAL 12/02→

		625800	kW / hp
2.8 D 4x4	03/03→	78 / 106	
2.8 D 4x4	03/03→	92 / 125	
2.8 TD	12/02→	92 / 125	

Luc		2074105	[–] 20741 15		Luc		2466301	[–] 24663 14	

PS10/ANIBAL Pickup 12/02→

		625900	kW / hp
2.8 TD	12/02→	78 / 106	
2.8 TD	12/02→	92 / 125	
2.8 TD All-wheel Drive	09/04→12/08	92 / 125	

Luc		2074105	[–] 20741 15		Luc		2466301	[–] 24663 14	

PS10/ANIBAL Pick-up 12/02→ → PS10/ANIBAL Pickup, Page 1013

ALHAMBRA (7V8, 7V9) 04/96→03/10

		626000	kW / hp
1.8 T 20V	10/97→03/10	110 / 150	

Ate		2184802	[–] 21848 19.7	→7M-W-070000	Luc		2344605	[+] 23446 16.5	7M-2-500001→ PR MC0,MG8
Ate		2184903	[+] 21849 20.6	7M-X-000001→ →7M-1-530756	Luc		2355403	[+] 23554 17.2	→7M-1-530756 PR ML1,MF7,M3L,D3E
Ate		2326903	[+] 23269 20.1	7M-2-500001→ PR MC0,MG8	Luc		82037300		→7M-1-530756 PR ML1,MF7,M3L,D3E
Ate		82029300		7M-2-500001→ PR MC0,MG8	Luc		82059600		7M-2-500001→ PR MC0,MG8
Ate		82062900			Luc		82062800		
		92109900	ø 313 x 26 x 56.2	7M-2-500001→ PR MC0,MG8	Luc		82062800		→7M-1-530756 PR ML1,MF7,M3L,D3E
	PRO	92074203	ø 288 x 25 x 55.3	→7M-1-530756	Luc		82063300		7M-2-500001→ PR MC0,MG8
	PRO	92109903	ø 313 x 26 x 56.2	7M-2-500001→ PR MC0,MG8		PRO	92074303	ø 268 x 10 x 45.7	→7M-1-530756 PR ML1,MF7,M3L,D3E
						PRO	92098103	ø 294 x 13.5 x 41	7M-2-500001→ PR MC0,MG8

		626100	kW / hp
1.9 TDI	04/96→03/10	66 / 90	
1.9 TDI	08/96→06/00	81 / 110	
1.9 TDI	06/00→03/10	85 / 115	
2.0 i	04/96→03/10	85 / 115	

Ate		2184802	[–] 21848 19.7	→7M-W-070000	Luc		2344605	[+] 23446 16.5	⊕rim size 16" PR MC0,MG8
Ate		2184903	[+] 21849 20.6	⊕rim size 15" →7M-1-530756	Luc		2355403	[+] 23554 17.2	⊕rim size 15" PR ML1,MF7,M3L,D3E

		kW / hp											
ALHAMBRA (7V8, 7V9) 04/96→03/10													
		626100	Ate		2341801	[+] 23418 19.6	⊕ rim size 16" 7M-2-500001→ PR MF7,ML1,M3L,D3E	Luc		82037300		PR ML1,MF7,M3L,D3E
1.9 TDI	04/96→03/10	66 / 90										
1.9 TDI	08/96→06/00	81 / 110						Luc		82059600		⊕ rim size 16" PR MC0,MG8
1.9 TDI	06/00→03/10	85 / 115	Ate		82062900							
2.0 i	04/96→03/10	85 / 115						Luc		82062800		PR ML1,MF7,M3L,D3E
			Ate		82508900		⊕ rim size 16" 7M-2-500001→ PR MF7,ML1,M3L,D3E		PRO	92074303	ø 268 x 10 x 45.7	⊕ rim size 15" PR ML1,MF7,M3L,D3E
				PRO	92074203	ø 288 x 25 x 55.3	⊕ rim size 15" →7M-1-530756		PRO	92098103	ø 294 x 13.5 x 41	⊕ rim size 16" PR MC0,MG8
				PRO	92109803	ø 300 x 26 x 56	⊕ rim size 16" 7M-2-500001→ PR MF7,ML1,M3L,D3E					
		626200	Ate		2326903	[+] 23269 20.1	⊕ rim size 16" PR MC0,MG8,M3L	Luc		2355403	[+] 23554 17.2	
1.9 TDI	11/02→11/08	96 / 131										
1.9 TDI	05/05→05/07	110 / 150	Ate		2341801	[+] 23418 19.6	⊕ rim size 16" PR MF7,ML1,M3L,D3E	Luc		82037300		
2.0 TDI	11/05→03/10	103 / 140										
			Luc		82059600		PR MC0,MG8,M3L	Luc		82062800		
			Ate		82029300		⊕ rim size 16" PR MC0,MG8,M3L		PRO	92074303	ø 268 x 10 x 45.7	⊕ rim size 15" PR ML1,MF7,M3L,D3E
			Ate		82062900				PRO	92098103	ø 294 x 13.5 x 41	⊕ rim size 16" PR MC0,MG8,M3L
			Ate		82508900		⊕ rim size 16" PR MF7,ML1,M3L,D3E					
					92109900	ø 313 x 26 x 56.2	⊕ rim size 16" PR MC0,MG8,M3L					
				PRO	92109803	ø 300 x 26 x 56	⊕ rim size 16" PR MF7,ML1,M3L,D3E					
				PRO	92109903	ø 313 x 26 x 56.2	⊕ rim size 16" PR MC0,MG8,M3L					
		626300	Ate		2326903	[+] 23269 20.1		Luc		2344605	[+] 23446 16.5	
1.9 TDI 4motion	06/00→03/10	85 / 115										
1.9 Tdi 4x4	06/05→11/08	96 / 131	Ate		82029300			Luc		82059600		
2.8 V6	06/00→03/10	150 / 204										
2.8 V6 4motion	06/00→03/10	150 / 204	Ate		82062900			Luc		82063300		
					92109900	ø 313 x 26 x 56.2			PRO	92098103	ø 294 x 13.5 x 41	
				PRO	92109903	ø 313 x 26 x 56.2						
ALHAMBRA (710) 06/10→													
		626400	Ate		2433301	[+] 24333 20.6	Ø 312 mm PR 1LJ	Luc		2448301	[–] 24483 17.2	
1.4 TSI	06/10→	110 / 150										
2.0 TDI	06/10→	103 / 140	TRW		2473801	[+] 24738 20	Ø 314 mm PR 1LX,1LW	Luc	epad	2448381	[–] 24483 17.2	
2.0 TDI	06/10→	125 / 170										
2.0 TDI	06/10→05/11	100 / 136	Ate		82076800		Ø 312 mm PR 1LJ	Luc		82509000		
2.0 TDI All-wheel Drive	05/11→	85 / 115										
2.0 TDI	05/11→	103 / 140		PRO	92120503	ø 312 x 25 x 49.7	PR 1LJ		PRO	92140803	ø 282 x 12 x 48.5	
2.0 TSI	11/10→	147 / 200		PRO	92232403	ø 314 x 30 x 49.6	PR 1LW			TPM0008		
					TPM0008							
		626500	Ate		2433301	[+] 24333 20.6	PR 1LJ	Luc		2448301	[–] 24483 17.2	
1.8 TFSI	11/12→	118 / 160										
2.0 TDI	11/12→	130 / 177	TRW		2473801	[+] 24738 20	PR 1LW	Luc	epad	2448381	[–] 24483 17.2	
			Ate		82076800		PR 1LJ	Luc		82509000		
				PRO	92120503	ø 312 x 25 x 49.7	PR 1LJ		PRO	92140803	ø 282 x 12 x 48.5	
				PRO	92232403	ø 314 x 30 x 49.6	PR 1LW			TPM0008		
					TPM0008							
ALTEA (5P1) 03/04→05/09													
		626600	Ate		2358701	[+] 23587 20.3		Luc		2355402	[–] 23554 17.2	
1.2 TSI	04/10→	77 / 105										
1.4 TSI	11/07→	92 / 125	Ate	epad	2358781	[+] 23587 20.3		Luc	epad	2355481	[–] 23554 17.2	
1.6 TDI	10/09→	77 / 105										
1.6 TDI	11/10→	66 / 90	Ate		82062900			Luc		82037300		
1.8 TFSI	01/07→	118 / 160										
1.9 TDI	04/04→	77 / 105	Ate		82076800			Luc		82063300		
1.9 TDI	08/09→	66 / 90										
2.0 FSI	05/04→03/09	110 / 150		PRO	92120803	ø 288 x 25 x 49.8			PRO	92120903	ø 255 x 10 x 51.6	
2.0 TDI	11/05→	103 / 140		PRO	92120805	ø 288 x 25 x 49.8				TPM0008		
2.0 TDI 16V	03/04→	103 / 140			TPM0008							

30 kW / hp

ALTEA (5P1) 03/04→05/09

		626700	Ate		2313101	[+] 23131 19.7		Luc		2355402	[–] 23554 17.2	
1.4 16V	05/06→	63 / 86										
1.6	03/04→	75 / 102	Ate	epad	2313181	[+] 23131 19.7		Luc	epad	2355481	[–] 23554 17.2	
1.6 LPG	09/09→	75 / 102										
			Ate		82062900			Luc		82037300		
				PRO	92120703	ø 280 x 22 x 49.9		Luc		82063300		
				PRO	92120705	ø 280 x 22 x 49.9			PRO	92120903	ø 255 x 10 x 51.6	
					TPM0008					TPM0008		
		626800	Ate		2313101	[+] 23131 19.7	PR 1ZF Ø 280 mm	Luc		2355402	[–] 23554 17.2	PR 1KD,1KΩ Ø 255 mm PR 1KZ,1KJ Ø 286 mm
2.0 TDI	03/04→05/09	100 / 136										PR 1KF Ø 256 mm
			Ate	epad	2313181	[+] 23131 19.7	PR 1ZF Ø 280 mm	Luc	epad	2355481	[–] 23554 17.2	PR 1KD,1KΩ Ø 255 mm PR 1KZ,1KJ Ø 286 mm
			Ate		2358701	[+] 23587 20.3	PR 1ZE Ø 288 mm PR 1LJ Ø 312 mm					PR 1KF Ø 256 mm
			Ate	epad	2358781	[+] 23587 20.3	PR 1ZE Ø 288 mm PR 1LJ Ø 312 mm	Bos		2456301	[–] 24563 17.7	Ø 272 mm PR 1KS
			Ate		82062900			Luc		82037300		PR 1KD,1KΩ,1KF,1KJ PR 1KZ
			Ate		82076800		PR 1ZE Ø 288 mm PR 1LJ Ø 312 mm	Bos		82054300		Ø 272 mm PR 1KS
								Luc		82063300		PR 1KD,1KΩ,1KJ,1KF PR 1KZ
				PRO	92120503	ø 312 x 25 x 49.7	PR 1LJ		PRO	92120903	ø 255 x 10 x 51.6	PR 1KD,1KΩ
				PRO	92120703	ø 280 x 22 x 49.9	PR 1ZF		PRO	92121103	ø 256 x 12 x 48.4	PR 1KF
				PRO	92120705	ø 280 x 22 x 49.9	PR 1ZF		PRO	92140803	ø 282 x 12 x 48.5	PR 1KZ,1KJ
				PRO	92120803	ø 288 x 25 x 49.8	PR 1ZE		PRO	92224903	ø 272 x 10 x 48.3	PR 1KS
				PRO	92120805	ø 288 x 25 x 49.8	PR 1ZE					
					TPM0008					TPM0008		
		626900	Ate		2358701	[+] 23587 20.3		Luc		2355402	[–] 23554 17.2	PR 1KD Ø 255 mm PR 1KZ,1KJ Ø 286 mm
2.0 TDI	03/06→	125 / 170										
			Ate	epad	2358781	[+] 23587 20.3		Luc	epad	2355481	[–] 23554 17.2	PR 1KD Ø 255 mm PR 1KZ,1KJ Ø 286 mm
			Ate		82062900			Luc		82037300		
			Ate		82076800			Luc		82063300		
				PRO	92120503	ø 312 x 25 x 49.7			PRO	92120903	ø 255 x 10 x 51.6	PR 1KD
					TPM0008				PRO	92140803	ø 282 x 12 x 48.5	PR 1KZ,1KJ
										TPM0008		
		627000	Ate		2358701	[+] 23587 20.3		Luc		2355402	[–] 23554 17.2	
2.0 TFSI	04/06→05/09	147 / 200										
			Ate	epad	2358781	[+] 23587 20.3		Luc	epad	2355481	[–] 23554 17.2	
			Ate		82062900			Luc		82037300		
			Ate		82076800			Luc		82063300		
				PRO	92120503	ø 312 x 25 x 49.7			PRO	92140803	ø 282 x 12 x 48.5	
					TPM0008					TPM0008		

ALTEA XL (5P5, 5P8) 10/06→12/12

		627100	Ate		2358701	[+] 23587 20.3		Luc		2355402	[–] 23554 17.2	
1.2 TSI	04/10→	77 / 105										
1.4 TSI	11/07→	92 / 125	Ate	epad	2358781	[+] 23587 20.3		Luc	epad	2355481	[–] 23554 17.2	
1.4 TSI	09/09→12/12	89 / 121										
1.6 TDI	10/09→	77 / 105										
1.6 TDI	11/10→	66 / 90	Ate		82062900			Luc		82037300		
1.8 TFSI	01/07→	118 / 160										
1.9 TDI	10/06→	77 / 105	Ate		82076800			Luc		82063300		
1.9 TDI	08/09→	66 / 90										
2.0 FSI	10/06→03/09	110 / 150										
2.0 TDI	10/06→	103 / 140		PRO	92120803	ø 288 x 25 x 49.8			PRO	92120903	ø 255 x 10 x 51.6	
2.0 TDI 16V	10/06→	103 / 140		PRO	92120805	ø 288 x 25 x 49.8						
					TPM0008					TPM0008		
		627200	Ate		2313101	[+] 23131 19.7	PR 1ZF Ø 280 mm	Luc		2355402	[–] 23554 17.2	PR 1KD,1KΩ Ø 255 mm PR 1KZ,1KJ Ø 286 mm
1.4 16V	10/06→	63 / 86										
1.6 Multifuel	10/06→	75 / 102										PR 1KF Ø 256 mm
2.0 TDI	11/06→03/09	100 / 136										

R-S

ALTEA XL (5P5, 5P8) 10/06→12/12

2.0 TDI 4x4	06/07→	103 / 140	Ate		2313181	[+] 23131	19.7	PR 1ZF Ø 280 mm	Luc		2355481	[–] 23554	17.2	PR 1KD,1KΩ Ø 255 mm
2.0 TDI 4x4	06/07→	125 / 170												PR 1KZ,1KJ Ø 286 mm
2.0 TFSI	10/06→05/09	147 / 200												PR 1KF Ø 256 mm
2.0 TFSI 4x4	06/07→05/09	147 / 200	Ate		2358701	[+] 23587	20.3	PR 1ZE Ø 288 mm	Bos		2456301	[–] 24563	17.7	Ø 272 mm PR 1KS
2.0 TFSI 4x4	05/09→	155 / 211						PR 1LJ Ø 312 mm						
			Ate		2358781	[+] 23587	20.3	PR 1ZE Ø 288 mm	Luc		82037300			PR 1KD,1KQ,1KF,1KJ PR 1KZ
								PR 1LJ Ø 312 mm	Bos		82054300			Ø 272 mm PR 1KS
			Ate		82062900				Luc		82063300			PR 1KD,1KQ,1KJ,1KF PR 1KZ
			Ate		82076800			PR 1ZE Ø 288 mm						
								PR 1LJ Ø 312 mm						
				PRO	92120503	ø 312 x 25 x 49.7		PR 1LJ		PRO	92120903	ø 255 x 10 x 51.6		PR 1KD,1KQ
				PRO	92120703	ø 280 x 22 x 49.9		PR 1ZF		PRO	92121103	ø 256 x 12 x 48.4		PR 1KF
				PRO	92120705	ø 280 x 22 x 49.9		PR 1ZF		PRO	92140803	ø 282 x 12 x 48.5		PR 1KZ,1KJ
				PRO	92120803	ø 288 x 25 x 49.8		PR 1ZE		PRO	92224903	ø 272 x 10 x 48.3		PR 1KS
				PRO	92120805	ø 288 x 25 x 49.8		PR 1ZE						
					TPM0008						TPM0008			
		627300	Ate		2313101	[+] 23131	19.7		Luc		2355402	[–] 23554	17.2	
1.6	10/06→	75 / 102												
1.6 LPG	09/09→	75 / 102	Ate		2313181	[+] 23131	19.7		Luc		2355481	[–] 23554	17.2	
			Ate		82062900				Luc		82037300			
				PRO	92120703	ø 280 x 22 x 49.9			Luc		82063300			
				PRO	92120705	ø 280 x 22 x 49.9				PRO	92120903	ø 255 x 10 x 51.6		
					TPM0008						TPM0008			
		627400	Ate		2313101	[+] 23131	19.7	PR 1ZF	Luc		2355402	[–] 23554	17.2	PR 1KD
1.8	09/09→12/12	125 / 170												
1.8	09/09→12/12	157 / 214	Ate		2313181	[+] 23131	19.7	PR 1ZF	Luc		2355481	[–] 23554	17.2	PR 1KD
			Ate		2358701	[+] 23587	20.3	PR 1ZE,1ZA,1LJ	Bos		2456301	[–] 24563	17.7	PR 1KS
			Ate		2358781	[+] 23587	20.3	PR 1ZE,1ZA,1LJ	Bos		82054300			
			Ate		82076800			PR 1ZE,1ZA,1LJ		PRO	92120903	ø 255 x 10 x 51.6		PR 1KD
				PRO	92120503	ø 312 x 25 x 49.7		PR 1ZA,1LJ		PRO	92224903	ø 272 x 10 x 48.3		PR 1KS
				PRO	92120703	ø 280 x 22 x 49.9		PR 1ZF						
				PRO	92120705	ø 280 x 22 x 49.9		PR 1ZF						
				PRO	92120803	ø 288 x 25 x 49.8		PR 1ZE						
				PRO	92120805	ø 288 x 25 x 49.8		PR 1ZE						
					TPM0008						TPM0008			
		627500	Ate		2358701	[+] 23587	20.3		Luc		2355402	[–] 23554	17.2	
2.0 TDI	06/07→	125 / 170	Ate		2358781	[+] 23587	20.3		Luc		2355481	[–] 23554	17.2	
			Ate		82062900				Luc		82037300			
			Ate		82076800				Luc		82063300			
				PRO	92120503	ø 312 x 25 x 49.7				PRO	92120903	ø 255 x 10 x 51.6		
					TPM0008						TPM0008			
		627600	Ate		2313101	[+] 23131	19.7	PR 1ZF	Luc		2355402	[–] 23554	17.2	PR 1KD
2.0 TDI 16V 4x4	10/10→	103 / 140	Ate		2313181	[+] 23131	19.7	PR 1ZF	Luc		2355481	[–] 23554	17.2	PR 1KD
			Ate		2358701	[+] 23587	20.3	PR 1ZE,1ZA	Bos		2456301	[–] 24563	17.7	PR 1KS
			Ate		2358781	[+] 23587	20.3	PR 1ZE,1ZA	Bos		82054300			PR 1KD,1KS
			Ate		82076800			PR 1ZE,1ZA		PRO	92120903	ø 255 x 10 x 51.6		PR 1KD
				PRO	92120503	ø 312 x 25 x 49.7		PR 1ZA		PRO	92224903	ø 272 x 10 x 48.3		PR 1KS

30 kW / hp

ALTEA XL (5P5, 5P8) 10/06→12/12

627600												
2.0 TDI 16V 4x4	10/10→	103 / 140		PRO	92120703	ø 280 x 22 x 49.9	PR 1ZF			TPM0008		
				PRO	92120705	ø 280 x 22 x 49.9	PR 1ZF					
				PRO	92120803	ø 288 x 25 x 49.8	PR 1ZE					
				PRO	92120805	ø 288 x 25 x 49.8	PR 1ZE					
					TPM0008							

AROSA (6H) 05/97→06/04

627700			VW		2186602	[–] 21866 17.2				91018200	ø 180 x 31	⊖ ABS →6H-X-090001
1.0	05/97→06/04	37 / 50										
1.0	10/98→01/01	37 / 50	Ate		82062900					91044700	ø 200 x 40	⊕ ABS 6H-V-000001→
												⊖ ABS 6H-X-090001→
				PRO	92071903	ø 239 x 10 x 33.5		Ate		97000500		⊖ ABS →6H-X-090001
					TPM0008			Ate		97006500		⊕ ABS 6H-V-000001→
												⊖ ABS 6H-X-090001→
										84018202	bore ø 15.9 ø 180 x 31	⊖ ABS →6H-X-090001
										84044705	bore ø 15.9 ø 200 x 40	⊖ ABS 6H-X-090001→
										84044706	bore ø 17.5 ø 200 x 40	⊕ ABS
										84044708	bore ø 15.9 ø 200 x 40	⊖ ABS
										94022700	ø 180,0 x 41	05/99→
										94022800	ø 200,0 x 50.5	⊕ ABS 6H-V-000001→
												⊖ ABS 6H-X-090001→
										94006600	ø 180,0 x 38.5	→6N-X-027500
627800			VW		2186602	[–] 21866 17.2				91018200	ø 180 x 31	⊖ ABS →6H-X-090001
1.4	05/97→06/04	44 / 60	Ate		82062900					91044700	ø 200 x 40	⊕ ABS 6H-V-000001→
												⊖ ABS 6H-X-090001→
				PRO	92072003	ø 239 x 18 x 34.1		Ate		97000500		⊖ ABS →6H-X-090001
					TPM0008			Ate		97006500		⊕ ABS 6H-V-000001→
												⊖ ABS 6H-X-090001→
										84018202	bore ø 15.9 ø 180 x 31	⊖ ABS →6H-X-090001
										84044705	bore ø 15.9 ø 200 x 40	⊖ ABS 6H-X-090001→
										84044706	bore ø 17.5 ø 200 x 40	⊕ ABS
										84044708	bore ø 15.9 ø 200 x 40	⊖ ABS
										94022700	ø 180,0 x 41	05/99→
										94022800	ø 200,0 x 50.5	⊕ ABS 6H-V-000001→
												⊖ ABS 6H-X-090001→
										94006600	ø 180,0 x 38.5	→6N-X-027500
627900			Luc		2194502	[–] 21945 16.2		Luc		2355402	[–] 23554 17.2	
1.4 16V	01/00→06/04	74 / 100	Luc		82062800			Luc		2355481	[–] 23554 17.2	
				PRO	92036803	ø 256 x 20 x 38.7		Luc		82037300		
					TPM0008			Luc		82063300		
									PRO	92098203	ø 232 x 9 x 39.4	
628000			VW		2186602	[–] 21866 17.2	VW II			91018200	ø 180 x 31	⊖ ABS →6H-X-090001
1.4 TDI	01/00→06/04	55 / 75	Luc		2194502	[–] 21945 16.2	Lucas			91044700	ø 200 x 40	⊕ ABS 6H-V-000001→
												⊖ ABS 6H-X-090001→
			Luc		82062800			Ate		97000500		⊖ ABS →6H-X-090001
			Ate		82062900			Ate		97006500		⊕ ABS 6H-V-000001→
												⊖ ABS 6H-X-090001→
				PRO	92036803	ø 256 x 20 x 38.7	Lucas			84018202	bore ø 15.9 ø 180 x 31	⊖ ABS →6H-X-090001
				PRO	92072003	ø 239 x 18 x 34.1	VW II			84044705	bore ø 15.9 ø 200 x 40	⊖ ABS 6H-X-090001→
					TPM0008					84044708	bore ø 15.9 ø 200 x 40	⊖ ABS

R - S

		kW / hp											
AROSA (6H) 05/97→06/04													
1.4 TDI	01/00→06/04	628000 55 / 75								94022700	ø 180,0 x 41		
										94022800	ø 200,0 x 50.5	⊕ ABS 6H-V-000001→ ⊖ ABS 6H-X-090001→	
										94006600	ø 180,0 x 38.5	→6N-X-027500	
1.7 SDI	08/97→06/04	628100 44 / 60	VW		2186602	[–] 21866 17.2				91018200	ø 180 x 31	⊖ ABS →6H-X-090001	
			Ate		82062900					91044700	ø 200 x 40	⊕ ABS 6H-V-000001→ ⊖ ABS 6H-X-090001→	
				PRO	92072003	ø 239 x 18 x 34.1			Ate	97000500		⊖ ABS →6H-X-090001	
					TPM0008				Ate	97006500		⊕ ABS 6H-V-000001→ ⊖ ABS 6H-X-090001→	
										84018202	bore ø 15.9 ø 180 x 31	⊖ ABS →6H-X-090001	
										84044705	bore ø 15.9 ø 200 x 40	⊖ ABS 6H-X-090001→	
										84044706	bore ø 17.5 ø 200 x 40	⊕ ABS	
										94022700	ø 180,0 x 41	05/99→	
										94022800	ø 200,0 x 50.5	⊕ ABS 6H-V-000001→ ⊖ ABS 6H-X-090001→	
										94006600	ø 180,0 x 38.5	→6N-X-027500	
CORDOBA (6K1, 6K2) 02/93→10/99													
1.0 i	09/96→06/99	628200 37 / 50	Kel		2088708	[–] 20887 17.3	→6K-W-000500			91018200	ø 180 x 31	⊖ ABS	
1.4 i 16V	09/96→06/99	74 / 101	VW		2186601	[–] 21866 15.3	6K-W-000500→			91044700	ø 200 x 40	⊕ ABS	
			VW		2186603	[–] 21866 19.7	⊕ ABS →6K-W-000500 ⊕ reinf.brake →6K-W-000500		Ate	97000500		⊖ ABS	
			Kel		82026700				Ate	97006500		⊕ ABS	
			Ate		82062900		→6K-W-000500 ⊕ ABS			83044701	bore ø 19 ø 200 x 40	⊕ ABS	
				PRO	92009303	ø 239 x 10 x 38.6	→6K-W-000500			84018205	bore ø 17.5 ø 180 x 31	⊖ ABS	
				PRO	92010603	ø 239 x 12 x 35	⊕ ABS →6K-W-000500 ⊕ reinf.brake →6K-W-000500			84044703	bore ø 19 ø 200 x 40	⊕ ABS	
				PRO	92012103	ø 239 x 20 x 38.7	6K-W-000500→			84044706	bore ø 17.5 ø 200 x 40	⊕ ABS	
										94006600	ø 180,0 x 38.5	⊖ ABS	
										94006700	ø 200,0 x 49.8	⊕ ABS	
1.4	12/97→04/99	628300 40 / 54	Kel		2088708	[–] 20887 17.3	6K-TR099021→ →6K-V-241400			91018200	ø 180 x 31	⊖ ABS	
			Kel		2088710	[–] 20887 19.7	⊕ ABS →6K-TR046588 ⊕ reinf.brake →6K-TR046588			91044700	ø 200 x 40	⊕ ABS	
			Kel		2088902	[–] 20889 17.3	→6K-TR099020		Ate	97000500		⊖ ABS	
			VW		2186601	[–] 21866 15.3	6K-V-241400→		Ate	97006500		⊕ ABS	
			VW		2186603	[–] 21866 19.7	⊕ ABS 6K-TR046589→ →6K-V-241400 ⊕ reinf.brake 6K-TR046589→ →6K-V-241400			83044701	bore ø 19 ø 200 x 40	⊕ ABS	
			Kel		82026700					84018205	bore ø 17.5 ø 180 x 31	⊖ ABS	
			Ate		82062900		6K-TR046589→ →6K-V-241400 ⊕ ABS			84044703	bore ø 19 ø 200 x 40	⊕ ABS	
										84044706	bore ø 17.5 ø 200 x 40	⊕ ABS	
				PRO	92009303	ø 239 x 10 x 38.6	→6K-V-241400			94006600	ø 180,0 x 38.5	⊖ ABS	
				PRO	92010603	ø 239 x 12 x 35	⊕ ABS →6K-V-241400 ⊕ reinf.brake →6K-V-241400			94006700	ø 200,0 x 49.8	⊕ ABS	
				PRO	92012103	ø 239 x 20 x 38.7	6K-V-241400→						
1.4 i	06/94→06/99	628400 44 / 60	Kel		2088708	[–] 20887 17.3	6K-TR099021→ →6K-V-241400			91018200	ø 180 x 31	⊖ ABS	
			Kel		2088710	[–] 20887 19.7	⊕ ABS →6K-TR046588 ⊕ reinf.brake →6K-TR046588			91044700	ø 200 x 40	⊕ ABS	
			Kel		2088902	[–] 20889 17.3	→6K-TR099020		Ate	97000500		⊖ ABS	
			VW		2186601	[–] 21866 15.3	6K-V-241400→		Ate	97006500		⊕ ABS	
			VW		2186603	[–] 21866 19.7	⊕ ABS 6K-TR046589→ →6K-V-241400 ⊕ reinf.brake 6K-TR046589→ →6K-V-241400			83044701	bore ø 19 ø 200 x 40	⊕ ABS	
										84018200	bore ø 17.5 ø 180 x 31	⊖ ABS	

30 kW / hp

CORDOBA (6K1, 6K2) 02/93→10/99

1.4 i	06/94→06/99	628400 44 / 60	Kel		82026700					84018205	bore ø 17.5 ø 180 x 31	⊖ ABS
			Ate		82062900		6K-TR046589→ →6K-V-241400 ⊕ ABS			84044703	bore ø 19 ø 200 x 40	⊕ ABS
				PRO	92009303	ø 239 x 10 x 38.6	→6K-V-241400			84044706	bore ø 17.5 ø 200 x 40	⊕ ABS
				PRO	92010603	ø 239 x 12 x 35	⊕ ABS →6K-V-241400 ⊕ reinf.brake →6K-V-241400			94006600	ø 180,0 x 38.5	⊖ ABS
				PRO	92012103	ø 239 x 20 x 38.7	6K-V-241400→			94006700	ø 200,0 x 49.8	⊕ ABS
1.6 i	02/93→06/99	628500 55 / 75	Kel		2088710	[–] 20887 19.7	→6K-TR046558			91018200	ø 180 x 31	⊖ ABS
			VW		2186603	[–] 21866 19.7	6K-TR046559→			91044700	ø 200 x 40	⊕ ABS
			Kel		82026700			Ate		97000500		⊖ ABS
			Luc		82062800			Ate		97006500		⊕ ABS
			Ate		82062900		6K-TR046559→			83044701	bore ø 19 ø 200 x 40	⊕ ABS
				PRO	92010603	ø 239 x 12 x 35				84018200	bore ø 17.5 ø 180 x 31	⊖ ABS
				PRO	92036803	ø 256 x 20 x 38.7	PR 1ZK			84018205	bore ø 17.5 ø 180 x 31	⊖ ABS
										84044703	bore ø 19 ø 200 x 40	⊕ ABS
										84044706	bore ø 17.5 ø 200 x 40	⊕ ABS
										94006600	ø 180,0 x 38.5	⊖ ABS
										94006700	ø 200,0 x 49.8	⊕ ABS
1.6 i	05/94→06/99	628600 55 / 75	Kel		2088707	[–] 20887 15.3	⊖ Lucas			91018200	ø 180 x 31	⊖ ABS
			VW		2186601	[–] 21866 15.3	⊖ Lucas			91044700	ø 200 x 40	⊕ ABS
			Luc		2194502	[–] 21945 16.2	Lucas	Ate		97000500		⊖ ABS
			Kel		82026700			Ate		97006500		⊕ ABS
			Kel		82026700		⊖ Lucas			83044701	bore ø 19 ø 200 x 40	⊕ ABS
			Luc		82062800					84018200	bore ø 17.5 ø 180 x 31	⊖ ABS
			Ate		82062900		6K-TR046559→			84018205	bore ø 17.5 ø 180 x 31	⊖ ABS
				PRO	92012103	ø 239 x 20 x 38.7	⊖ Lucas			84044703	bore ø 19 ø 200 x 40	⊕ ABS
				PRO	92036803	ø 256 x 20 x 38.7	PR 1ZK Lucas			84044706	bore ø 17.5 ø 200 x 40	⊕ ABS
										94006600	ø 180,0 x 38.5	⊖ ABS
										94006700	ø 200,0 x 49.8	⊕ ABS
1.6 i	07/96→10/99	628700 74 / 101	VW		2186601	[–] 21866 15.3	Ø 239 mm ⊕ disc-th. 20 mm			91018200	ø 180 x 31	⊖ ABS
			VW		2186603	[–] 21866 19.7	Ø 239 mm ⊕ disc-th. 12 mm			91044700	ø 200 x 40	⊕ ABS
			Luc		2194502	[–] 21945 16.2	Ø 256 mm	Ate		97000500		⊖ ABS
			Luc		82062800			Ate		97006500		⊕ ABS
			Ate		82062900					83044701	bore ø 19 ø 200 x 40	⊕ ABS
				PRO	92010603	ø 239 x 12 x 35	⊕ 2186603			84018205	bore ø 17.5 ø 180 x 31	⊖ ABS
				PRO	92012103	ø 239 x 20 x 38.7	⊕ 2186601			84044703	bore ø 19 ø 200 x 40	⊕ ABS
				PRO	92036803	ø 256 x 20 x 38.7	⊕ 2194502			84044706	bore ø 17.5 ø 200 x 40	⊕ ABS
										94006600	ø 180,0 x 38.5	⊖ ABS
										94006700	ø 200,0 x 49.8	⊕ ABS
1.8 i	02/93→06/99	628800 66 / 90	Kel		2088707	[–] 20887 15.3	6K-ZR003514→ →6K-ZR157804			91018200	ø 180 x 31	⊖ ABS
			Kel		2088710	[–] 20887 19.7	→6K-TR046558			91044700	ø 200 x 40	⊕ ABS
			VW		2186601	[–] 21866 15.3	6K-W-000500→	Ate		97000500		⊖ ABS

R - S

		kW / hp										
CORDOBA (6K1, 6K2) 02/93→10/99												
1.8 i	02/93→06/99	628800 66 / 90	VW	2186603	[–] 21866 19.7	6K-TR046559→ →6K-ZR003513 6K-ZR157805→ →6K-W-000500	Ate	97006500		⊕ ABS
			Kel	82026700		6K-ZR003514→ →6K-ZR157804		83044701	bore ø 19 ø 200 x 40	⊕ ABS
			Ate	82062900				84018200	bore ø 17.5 ø 180 x 31	⊖ ABS
			PRO	92010603	ø 239 x 12 x 35	→6K-ZR003513 6K-ZR157805→ →6K-W-000500		84018205	bore ø 17.5 ø 180 x 31	⊖ ABS
			PRO	92012103	ø 239 x 20 x 38.7	6K-ZR003514→ →6K-ZR157804 →6K-W-000500		84044703	bore ø 19 ø 200 x 40	⊕ ABS
								84044706	bore ø 17.5 ø 200 x 40	⊕ ABS
								94006600	ø 180,0 x 38.5	⊖ ABS
								94006700	ø 200,0 x 49.8	⊕ ABS
1.9 SDI	08/96→06/99	628900 47 / 64	VW	2186601	[–] 21866 15.3	vented disc		91018200	ø 180 x 31	⊖ ABS
			VW	2186603	[–] 21866 19.7	solid disc		91044700	ø 200 x 40	⊕ ABS
			Ate	82062900			Ate	97000500		⊖ ABS
			PRO	92010603	ø 239 x 12 x 35		Ate	97006500		⊕ ABS
			PRO	92012103	ø 239 x 20 x 38.7			83044701	bore ø 19 ø 200 x 40	⊕ ABS
								84018205	bore ø 17.5 ø 180 x 31	⊖ ABS
								84044703	bore ø 19 ø 200 x 40	⊕ ABS
								84044706	bore ø 17.5 ø 200 x 40	⊕ ABS
								94006600	ø 180,0 x 38.5	⊖ ABS
								94006700	ø 200,0 x 49.8	⊕ ABS
1.9 TDI	08/96→06/99	629000 66 / 90	Luc	2194502	[–] 21945 16.2		Luc	2355401	[–] 23554 15.2	⊕ rear disc brake
1.9 TDI	03/97→06/99	81 / 110	Luc	82062800			Luc	2355482	[–] 23554 15.2	⊕ rear disc brake
			PRO	92036803	ø 256 x 20 x 38.7		Luc	82033000		
							Luc	82062800		
								91044700	ø 200 x 40	⊕ rear drum brake
							Ate	97006500		⊕ rear drum brake
								83044701	bore ø 19 ø 200 x 40	⊕ rear drum brake
								84044703	bore ø 19 ø 200 x 40	⊕ rear drum brake
								84044706	bore ø 17.5 ø 200 x 40	⊕ rear drum brake
							PRO	92154203	ø 226 x 10 x 71.5	⊕ rear disc brake
							PRO	92041803	ø 226 x 10 x 71.5	⊕ rear disc brake
								94006700	ø 200,0 x 49.8	⊕ rear drum brake
2.0 i	02/93→06/99	629100 85 / 115	Luc	2016801	[–] 20168 16.2	→6K-TR184566	Luc	2355401	[–] 23554 15.2	
			Luc	2194502	[–] 21945 16.2	6K-TR184567→	Luc	2355482	[–] 23554 15.2	
			Luc	82062800			Luc	82033000		
			PRO	92036803	ø 256 x 20 x 38.7		Luc	82062800		
							PRO	92154203	ø 226 x 10 x 71.5	
							PRO	92041803	ø 226 x 10 x 71.5	
2.0 i 16V	08/96→06/99	629200 110 / 150	Luc	2016804	[–] 20168 19.6		Luc	2355402	[–] 23554 17.2	
			Luc	82062800			Luc	2355481	[–] 23554 17.2	
				92043500	ø 280 x 22 x 39.2		Luc	82033000		
							Luc	82062800		

		kW / hp										
CORDOBA (6K1, 6K2) 02/93→10/99												
		629200										
2.0 i 16V	08/96→06/99	110 / 150							PRO	92154203	ø 226 x 10 x 71.5	
									PRO	92041803	ø 226 x 10 x 71.5	
CORDOBA (6K2) 06/99→10/02												
		629300	VW		2186601	[–] 21866 15.3				91044700	ø 200 x 40	
1.0	06/99→10/02	37 / 50		PRO	92012103	ø 239 x 20 x 38.7		Ate		97006500		
1.0 16V	05/00→10/02	51 / 69			TPM0008					84044706	bore ø 17.5 ø 200 x 40	
1.4	06/99→10/02	44 / 60								TPM0008		
1.4 16V	05/00→10/02	55 / 75								94022800	ø 200,0 x 50.5	
1.6	06/99→10/02	55 / 75										
1.9 SDI	06/99→10/02	50 / 68										
		629400	Luc		2016804	[–] 20168 19.6	→08/02 PR 1LV,1LW	Luc		2355402	[–] 23554 17.2	⊕ rear disc brake
1.4 16V	02/00→10/02	74 / 100										
1.6	06/99→10/02	74 / 101	Ate		2313001	[–] 23130 19.7	09/02→ PR 1LQ,1ZF	Luc	epad	2355481	[–] 23554 17.2	⊕ rear disc brake
1.9 TDI	06/99→10/02	66 / 90	Ate	epad	2313081	[–] 23130 19.7	09/02→ PR 1LQ,1ZF	Luc		82033000		
			VW		2186601	[–] 21866 15.3	→08/02 PR 1LG	Luc		82062800		
			Luc		2194502	[–] 21945 16.2	→08/02 PR 1ZK			91044700	ø 200 x 40	⊕ rear drum brake
			Luc		2358102	[+] 23581 19	09/02→ PR 1LN,1ZH	Ate		97006500		⊕ rear drum brake
			Luc		82055400		09/02→ PR 1LN,1ZH			83044701	bore ø 19 ø 200 x 40	⊕ rear drum brake
			Luc		82062800		→08/02 PR 1LV,1LW,1ZK			84044703	bore ø 19 ø 200 x 40	⊕ rear drum brake
			Ate		82062900		09/02→ PR 1LQ/1ZF		PRO	92098203	ø 232 x 9 x 39.4	⊕ rear disc brake
			Luc		82063500		09/02→ PR 1LN/1ZH			TPM0008		
					92043500	ø 280 x 22 x 39.2	→08/02 PR 1LV,1LW			94022800	ø 200,0 x 50.5	⊕ rear drum brake
				PRO	92012103	ø 239 x 20 x 38.7	→08/02 PR 1LG					
				PRO	92036803	ø 256 x 20 x 38.7	→08/02 PR 1ZK					
				PRO	92082203	ø 256 x 22 x 36.5	09/02→ PR 1LQ,1ZF					
				PRO	92106603	ø 288 x 25 x 34.4	09/02→ PR 1LN,1ZH					
					TPM0008							
		629500			TPM0008					TPM0008		
1.8 i	06/99→09/02	66 / 90										
		629600	Luc		2016804	[–] 20168 19.6	→08/02 PR 1LV,1LW	Luc		2355402	[–] 23554 17.2	⊕ rear disc brake
1.8 T 20V Cupra	07/00→10/02	115 / 156	Luc		2194502	[–] 21945 16.2	→08/02 PR 1ZK	Luc	epad	2355481	[–] 23554 17.2	⊕ rear disc brake
			Luc		82055400		09/02→ PR 1LN,1ZH	Luc		82033000		
			Luc		82062800		→08/02 PR 1LV,1LW,1ZK	Luc		82062800		
			Ate		82062900		09/02→ PR 1LQ/1ZF		PRO	92098203	ø 232 x 9 x 39.4	
			Luc		82063500		09/02→ PR 1LN/1ZH			TPM0008		
					92043500	ø 280 x 22 x 39.2						
					TPM0008							
		629700	Luc		2016804	[–] 20168 19.6	→08/02 PR 1LV,1LW	Luc		2355402	[–] 23554 17.2	⊕ rear disc brake
1.9 TDI	06/99→10/02	81 / 110	Ate		2313001	[–] 23130 19.7	09/02→ PR 1LQ,1ZF	Luc	epad	2355481	[–] 23554 17.2	⊕ rear disc brake
			Ate	epad	2313081	[–] 23130 19.7	09/02→ PR 1LQ,1ZF	Luc		82033000		
			VW		2186601	[–] 21866 15.3	→08/02 PR 1LG	Luc		82062800		
			Luc		2194502	[–] 21945 16.2	→08/02 PR 1ZK		PRO	92098203	ø 232 x 9 x 39.4	⊕ rear disc brake
			Luc		2358102	[+] 23581 19	09/02→ PR 1LN,1ZH			TPM0008		
			Luc		82055400		09/02→ PR 1LN,1ZH					

R - S

		kW / hp												
CORDOBA (6K2) 06/99→10/02														
		629700	Luc		82062800		→08/02 PR 1LV,1LW,1ZK							
1.9 TDI	06/99→10/02	81 / 110	Ate		82062900		09/02→ PR 1LQ/1ZF							
			Luc		82063500		09/02→ PR 1LN/1ZH							
					92043500	ø 280 x 22 x 39.2	→08/02 PR 1LV,1LW							
				PRO	92012103	ø 239 x 20 x 38.7	→08/02 PR 1LG							
				PRO	92036803	ø 256 x 20 x 38.7	→08/02 PR 1ZK							
				PRO	92082203	ø 256 x 22 x 36.5	09/02→ PR 1LQ,1ZF							
				PRO	92106603	ø 288 x 25 x 34.4	09/02→ PR 1LN,1ZH							
					TPM0008									
CORDOBA (6L2) 09/02→12/09														
		629800	Ate		2313001	[–] 23130 19.7		Luc		2355402	[–] 23554 17.2	⊕ rear disc brake		
1.2	10/02→06/06	47 / 64												
1.2 12V	05/06→11/09	51 / 70	Ate	epad	2313081	[–] 23130 19.7		Luc	epad	2355481	[–] 23554 17.2	⊕ rear disc brake		
1.4 16V	09/02→12/07	55 / 75												
1.4 16V	05/06→11/09	63 / 86												
1.4 TDI	05/05→11/09	51 / 70	Ate		82062900			Luc		82037300				
1.4 TDI	06/05→11/09	59 / 80												
1.9 SDI	09/02→11/09	47 / 64		PRO	92082203	ø 256 x 22 x 36.5		Luc		82062800				
					TPM0008					91044700	ø 200 x 40	⊕ rear drum brake		
								Ate		97006500		⊕ rear drum brake		
										83044701	bore ø 19 ø 200 x 40	→6L-7-108000		
										84044703	bore ø 19 ø 200 x 40	→6L-7-108000		
										84044706	bore ø 17.5 ø 200 x 40	6L-7-108001→		
									PRO	92082503	ø 232 x 9 x 39.3	⊕ rear disc brake		
										TPM0008				
										94023800	ø 200,0 x 50.5	⊕ rear drum brake		
		629900	Ate		2313001	[–] 23130 19.7	PR 1LQ,1ZF	Luc		2355402	[–] 23554 17.2	⊕ rear disc brake		
1.4 16V	10/02→11/09	74 / 100												
1.6	04/03→11/09	74 / 101	Ate	epad	2313081	[–] 23130 19.7	PR 1LQ,1ZF	Luc	epad	2355481	[–] 23554 17.2	⊕ rear disc brake		
1.6	09/05→12/09	75 / 102												
1.6 16V	11/06→11/09	77 / 105	Luc		2358102	[+] 23581 19	PR 1LN,1ZH	Luc		82037300				
1.9 TDI	09/02→11/09	74 / 100												
2.0	09/02→11/09	85 / 115	Luc		82055400		PR 1LN,1ZH	Luc		82062800				
			Ate		82062900		PR 1LQ/1ZF			91044700	ø 200 x 40	⊕ rear drum brake		
			Luc		82063500		PR 1LN/1ZH	Ate		97006500		⊕ rear drum brake		
				PRO	92082203	ø 256 x 22 x 36.5	PR 1LQ,1ZF			83044701	bore ø 19 ø 200 x 40	→6L-7-108000		
				PRO	92106603	ø 288 x 25 x 34.4	PR 1LN,1ZH			84044703	bore ø 19 ø 200 x 40	→6L-7-108000		
					TPM0008					84044706	bore ø 17.5 ø 200 x 40	6L-7-108001→		
									PRO	92082503	ø 232 x 9 x 39.3	⊕ rear disc brake		
										TPM0008				
										94023800	ø 200,0 x 50.5	⊕ rear drum brake		
		630000	Ate		2313001	[–] 23130 19.7				91044700	ø 200 x 40			
1.4 TDI	10/02→12/05	55 / 75												
			Ate	epad	2313081	[–] 23130 19.7		Ate		97006500				
			Ate		82062900					83044701	bore ø 19 ø 200 x 40	→6L-7-108000		
				PRO	92082203	ø 256 x 22 x 36.5				84044703	bore ø 19 ø 200 x 40	→6L-7-108000		
					TPM0008					84044706	bore ø 17.5 ø 200 x 40	6L-7-108001→		
										94023800	ø 200,0 x 50.5			

			30 kW / hp										
CORDOBA (6L2) 09/02→12/09													
		630100	Luc		2358102	[+] 23581 19		Luc		2355402	[–] 23554 17.2	⊕ rear disc brake
1.9 TDI	10/02→11/09	96 / 131	Luc		82063500			Luc	epad	2355481	[–] 23554 17.2	⊕ rear disc brake
				PRO	92106603	ø 288 x 25 x 34.4		Luc		82037300		
					TPM0008			Luc		82062800		
									PRO	92082503	ø 232 x 9 x 39.3	
										TPM0008		
CORDOBA Saloon (6K1, 6K2) 02/93→10/99 → CORDOBA (6K1, 6K2), Page 1018												
CORDOBA Saloon (6L2) 09/02→12/09 → CORDOBA (6L2), Page 1022												
CORDOBA Stufenheck (6K1, 6K2) 02/93→10/99 → CORDOBA (6K1, 6K2), Page 1018												
CORDOBA Stufenheck (6L2) 09/02→12/09 → CORDOBA (6L2), Page 1022												
CORDOBA Vario (6K5) 08/96→06/99												
		630200	VW		2186601	[–] 21866 15.3				91044700	ø 200 x 40	PR 1KB,1KM
1.4	12/97→04/99	40 / 54										
1.4 i	09/96→06/99	44 / 60		PRO	92012103	ø 239 x 20 x 38.7		Ate		97006500		
					TPM0008					83044701	bore ø 19 ø 200 x 40	PR 1KM
										84044703	bore ø 19 ø 200 x 40	PR 1KM
										84044706	bore ø 17.5 ø 200 x 40	PR 1KB
										TPM0008		
										94022800	ø 200,0 x 50.5	
		630300	Luc		2016804	[–] 20168 19.6	PR 1LV,1LW	Luc		2355402	[–] 23554 17.2	⊕ rear disc brake
1.6 i	09/96→06/99	55 / 75										
1.6 i	05/97→06/99	55 / 75	VW		2186601	[–] 21866 15.3	PR 1LG	Luc	epad	2355481	[–] 23554 17.2	⊕ rear disc brake
			Luc		2194502	[–] 21945 16.2	PR 1ZK	Luc		82033000		
			Luc		82062800		PR 1LV,1LW,1ZK	Luc		82062800		
					92043500	ø 280 x 22 x 39.2	PR 1LV,1LW			91044700	ø 200 x 40	PR 1KB,1KM
				PRO	92012103	ø 239 x 20 x 38.7	PR 1LG	Ate		97006500		PR 1KB,1KM
				PRO	92036803	ø 256 x 20 x 38.7	PR 1ZK			83044701	bore ø 19 ø 200 x 40	PR 1KM
					TPM0008					84044703	bore ø 19 ø 200 x 40	PR 1KM
										84044706	bore ø 17.5 ø 200 x 40	PR 1KB
									PRO	92098203	ø 232 x 9 x 39.4	⊕ rear disc brake
										TPM0008		
										94022800	ø 200,0 x 50.5	PR 1KB,1KM
		630400	VW		2186601	[–] 21866 15.3	Ø 239 mm ⊕ disc-th. 20 mm			91044700	ø 200 x 40	PR 1KB,1KM
1.6 i	09/96→06/99	74 / 101	VW		2186603	[–] 21866 19.7	Ø 239 mm ⊕ disc-th. 12 mm	Ate		97006500		PR 1KB,1KM
			Luc		2194502	[–] 21945 16.2	Ø 256 mm			83044701	bore ø 19 ø 200 x 40	PR 1KM
			Luc		82062800					84044703	bore ø 19 ø 200 x 40	PR 1KM
			Ate		82062900					84044706	bore ø 17.5 ø 200 x 40	PR 1KB
				PRO	92010603	ø 239 x 12 x 35	⊕ 2186603			TPM0008		
				PRO	92012103	ø 239 x 20 x 38.7	⊕ 2186601			94022800	ø 200,0 x 50.5	PR 1KB,1KM
				PRO	92036803	ø 256 x 20 x 38.7	⊕ 2194502					
					TPM0008							
		630500			TPM0008					TPM0008		
1.8 i	08/96→06/99	66 / 90										
		630600	VW		2186601	[–] 21866 15.3	vented disc			91044700	ø 200 x 40	PR 1KB,1KM
1.9 SDI	09/96→06/99	47 / 64										

R - S

		kW / hp												
CORDOBA Vario (6K5) 08/96→06/99														
1.9 SDI	09/96→06/99	630600 47 / 64	VW		2186603	[–] 21866 19.7	solid disc		Ate		97006500		PR 1KB,1KM
			Ate		82062900						83044701	bore ø 19 ø 200 x 40	PR 1KM
				PRO	92010603	ø 239 x 12 x 35					84044703	bore ø 19 ø 200 x 40	PR 1KM
				PRO	92012103	ø 239 x 20 x 38.7					84044706	bore ø 17.5 ø 200 x 40	PR 1KB
					TPM0008						TPM0008		
											94022800	ø 200,0 x 50.5	PR 1KB,1KM
1.9 TDI	08/96→06/99	630700 66 / 90	Luc		2194502	[–] 21945 16.2			Luc		2355401	[–] 23554 15.2	⊕ rear disc brake
1.9 TDI	07/97→06/99	81 / 110	Luc		82062800				Luc	epad	2355482	[–] 23554 15.2	⊕ rear disc brake
				PRO	92036803	ø 256 x 20 x 38.7			Luc		82033000		
					TPM0008				Luc		82062800		
											91044700	ø 200 x 40	PR 1KB,1KM
									Ate		97006500		PR 1KB,1KM
											83044701	bore ø 19 ø 200 x 40	PR 1KM
											84044703	bore ø 19 ø 200 x 40	PR 1KM
											84044706	bore ø 17.5 ø 200 x 40	PR 1KB
										PRO	92154203	ø 226 x 10 x 71.5	⊕ rear disc brake
										PRO	92041803	ø 226 x 10 x 71.5	⊕ rear disc brake
											TPM0008		
											94022800	ø 200,0 x 50.5	PR 1KB,1KM
CORDOBA Vario (6K5) 06/99→12/02														
1.4	06/99→12/02	630800 44 / 60	VW		2186601	[–] 21866 15.3					91044700	ø 200 x 40	⊕ rear drum brake
				PRO	92012103	ø 239 x 20 x 38.7			Ate		97006500		
											94022800	ø 200,0 x 50.5	
1.4	02/00→12/02	630900 74 / 101	Luc		2016804	[–] 20168 19.6	→08/02 PR 1LV,1LW		Luc		2355402	[–] 23554 17.2	⊕ rear disc brake
			Ate		2313001	[–] 23130 19.7	09/02→ PR 1LQ,1ZF		Luc	epad	2355481	[–] 23554 17.2	⊕ rear disc brake
			Ate	epad	2313081	[–] 23130 19.7	09/02→ PR 1LQ,1ZF		Luc		82033000		
			VW		2186601	[–] 21866 15.3	→08/02 PR 1LG				91044700	ø 200 x 40	⊕ rear drum brake
			Luc		2194502	[–] 21945 16.2	→08/02 PR 1ZK		Ate		97006500		⊕ rear drum brake
			Luc		2358102	[+] 23581 19	09/02→ PR 1LN,1ZH			PRO	92098203	ø 232 x 9 x 39.4	⊕ rear disc brake
					92043500	ø 280 x 22 x 39.2	→08/02 PR 1LV,1LW				94022800	ø 200,0 x 50.5	⊕ rear drum brake
				PRO	92012103	ø 239 x 20 x 38.7	→08/02 PR 1LG						
				PRO	92036803	ø 256 x 20 x 38.7	→08/02 PR 1ZK						
				PRO	92082203	ø 256 x 22 x 36.5	09/02→ PR 1LQ,1ZF						
				PRO	92106603	ø 288 x 25 x 34.4	09/02→ PR 1LN,1ZH						
1.4 16V	06/99→12/02	631000 55 / 75	VW		2186601	[–] 21866 15.3					91044700	ø 200 x 40	
				PRO	92012103	ø 239 x 20 x 38.7			Ate		97006500		
					TPM0008						TPM0008		
1.6	06/99→12/02	631100 55 / 75	VW		2186601	[–] 21866 15.3					91044700	ø 200 x 40	⊕ rear drum brake
				PRO	92012103	ø 239 x 20 x 38.7			Ate		97006500		
					TPM0008						TPM0008		

30 kW / hp

CORDOBA Vario (6K5) 06/99→12/02

631100													
1.6	06/99→12/02	55 / 75								94022800	ø 200,0 x 50.5		
631200			Luc		2016804	[–] 20168 19.6	→08/02 PR 1LV,1LW	Luc		2355402	[–] 23554 17.2	⊕ rear disc brake
1.6	06/99→12/02	74 / 101										
1.9 SDI	06/99→12/02	50 / 68	Ate		2313001	[–] 23130 19.7	09/02→ PR 1LQ,1ZF	Luc		2355481	[–] 23554 17.2	⊕ rear disc brake
1.9 TDI	06/99→12/02	66 / 90										
1.9 TDI	06/99→12/02	81 / 110	Ate		2313081	[–] 23130 19.7	09/02→ PR 1LQ,1ZF	Luc		82033000		
			VW		2186601	[–] 21866 15.3	→08/02 PR 1LG	Luc		82062800		
			Luc		2194502	[–] 21945 16.2	→08/02 PR 1ZK			91044700	ø 200 x 40	⊕ rear drum brake
			Luc		2358102	[+] 23581 19	09/02→ PR 1LN,1ZH	Ate		97006500		⊕ rear drum brake
			Luc		82055400		09/02→ PR 1LN,1ZH			92098203	ø 232 x 9 x 39.4	⊕ rear disc brake
			Luc		82062800		→08/02 PR 1LV,1LW,1ZK			94022800	ø 200,0 x 50.5	⊕ rear drum brake
			Ate		82062900		09/02→ PR 1LQ/1ZF					
			Luc		82063500		09/02→ PR 1LN/1ZH					
					92043500	ø 280 x 22 x 39.2	→08/02 PR 1LV,1LW					
				PRO	92012103	ø 239 x 20 x 38.7	→08/02 PR 1LG					
				PRO	92036803	ø 256 x 20 x 38.7	→08/02 PR 1ZK					
				PRO	92082203	ø 256 x 22 x 36.5	09/02→ PR 1LQ,1ZF					
				PRO	92106603	ø 288 x 25 x 34.4	09/02→ PR 1LN,1ZH					

EXEO (3R2) 12/08→12/12

631300			Ate		2301802	[+] 23018 20.4		Luc		2355401	[–] 23554 15.2		
1.6	03/09→09/10	75 / 102											
			Ate		2301881	[+] 23018 20.4		Luc		2355482	[–] 23554 15.2		
			Luc		82062800			Luc		82037300			
								Luc		82063300			
									PRO	92106203	ø 245 x 10 x 39.9		
631400			Ate		2301802	[+] 23018 20.4		Luc		2355401	[–] 23554 15.2		
1.8 T	12/08→05/10	110 / 150											
1.8 TSI	05/10→	118 / 160	Ate		2301881	[+] 23018 20.4		Luc		2355482	[–] 23554 15.2		
2.0 TDI	02/09→	125 / 170											
			Ate		82029300			Luc		82037300			
			Ate		82062900			Luc		82063300			
				PRO	92106103	ø 312 x 25 x 46.4			PRO	92106303	ø 255 x 12 x 39.9		
				PRO	92106105	ø 312 x 25 x 46.4							
					TPM0008								
631500			Ate		2301802	[+] 23018 20.4		Luc		2355401	[–] 23554 15.2		
1.8 TSI	09/10→	88 / 120											
2.0 TDI	12/08→	88 / 120	Ate		2301881	[+] 23018 20.4		Luc		2355482	[–] 23554 15.2		
2.0 TDI	12/08→	105 / 143											
			Ate		82029300			Luc		82037300			
			Ate		82062900			Luc		82063300			
					TPM0008				PRO	92106203	ø 245 x 10 x 39.9		
631600			Luc		2194504	[+] 21945 19.6	PR 1LZ	Luc		2355401	[–] 23554 15.2	PR 1KD,1KP	
2.0	09/09→12/12	149 / 203											
			Ate		2301802	[+] 23018 20.4	PR 1LB,1LT	Luc		2355482	[–] 23554 15.2	PR 1KD,1KP	
			Ate		2301881	[+] 23018 20.4	PR 1LB,1LT	Luc		2391401	[o] 23914 17.2	PR 1KW	
			Ate		2376302	[+] 23763 20.3	PR 1LA	Luc		2391481	[o] 23914 17.2	PR 1KW	
			Ate		2376381	[+] 23763 20.3	PR 1LA		PRO	92106203	ø 245 x 10 x 39.9	PR 1KD	
			Ate		82029300		PR 1LB,1LT		PRO	92106303	ø 255 x 12 x 39.9	PR 1KP	

R - S

		kW / hp										
EXEO (3R2) 12/08→12/12												
631600			Ate		82071800		PR 1LA		PRO	92137003	ø 288 x 12 x 35.8	PR 1KW
2.0	09/09→12/12	149 / 203		PRO	92057603	ø 288 x 25 x 46.2	PR 1LZ					
				PRO	92057605	ø 288 x 25 x 46.2	PR 1LZ					
				PRO	92083503	ø 280 x 22 x 46.2	PR 1LZ					
				PRO	92083505	ø 280 x 22 x 46.2	PR 1LZ					
				PRO	92106103	ø 312 x 25 x 46.4	PR 1LT					
				PRO	92106105	ø 312 x 25 x 46.4	PR 1LT					
				PRO	92106703	ø 320 x 30 x 46.5	PR 1LA					
				PRO	92106705	ø 320 x 30 x 46.5	PR 1LA					
				TPM	TPM0008							
631700			Ate		2301802	[+] 23018 20.4		Luc		2355401	[–] 23554 15.2	
2.0 TFSI	03/09→	147 / 200	Ate	epad	2301881	[+] 23018 20.4		Luc	epad	2355482	[–] 23554 15.2	
			Ate		82029300			Luc		82063300		
			Ate		82062900				PRO	92106303	ø 255 x 12 x 39.9	
				PRO	92106103	ø 312 x 25 x 46.4						
				PRO	92106105	ø 312 x 25 x 46.4						
				TPM	TPM0008							
631800			Ate		2376302	[+] 23763 20.3		Luc		2391401	[o] 23914 17.2	
2.0 TFSI	05/10→	155 / 211	Ate	epad	2376381	[+] 23763 20.3		Luc	epad	2391481	[o] 23914 17.2	
			Ate		82062900			Luc		82509000		
			Ate		82071800			Luc		82063300		
				PRO	92106703	ø 320 x 30 x 46.5			PRO	92137003	ø 288 x 12 x 35.8	
				PRO	92106705	ø 320 x 30 x 46.5						
				TPM	TPM0008							
EXEO ST (3R5) 05/09→09/10												
631900			Ate		2301802	[+] 23018 20.4		Luc		2355401	[–] 23554 15.2	
1.6	06/09→09/10	75 / 102	Ate	epad	2301881	[+] 23018 20.4		Luc	epad	2355482	[–] 23554 15.2	
			Luc		82062800			Luc		82037300		
									PRO	92106203	ø 245 x 10 x 39.9	
632000			Ate		2301802	[+] 23018 20.4		Luc		2355401	[–] 23554 15.2	
1.8 T	06/09→05/10	110 / 150										
1.8 TSI	05/10→	118 / 160										
2.0 TDI	05/09→	125 / 170	Ate	epad	2301881	[+] 23018 20.4		Luc	epad	2355482	[–] 23554 15.2	
			Ate		82029300			Luc		82037300		
			Ate		82062900				PRO	92106303	ø 255 x 12 x 39.9	
				PRO	92106103	ø 312 x 25 x 46.4						
				PRO	92106105	ø 312 x 25 x 46.4						
				TPM	TPM0008							
632100			Ate		2301802	[+] 23018 20.4		Luc		2355401	[–] 23554 15.2	
1.8 TSI	09/10→	88 / 120										
2.0 TDI	05/09→	105 / 143										
2.0 TDI	07/09→	88 / 120	Ate	epad	2301881	[+] 23018 20.4		Luc	epad	2355482	[–] 23554 15.2	
			Ate		82029300			Luc		82037300		
			Ate		82062900				PRO	92106203	ø 245 x 10 x 39.9	

		kW / hp										
EXEO ST (3R5) 05/09→09/10												
632100				TPM0008								
1.8 TSI	09/10→	88 / 120										
2.0 TDI	05/09→	105 / 143										
2.0 TDI	07/09→	88 / 120										
632200			Ate	2376302	[+] 23763 20.3		Luc	2391401	[o] 23914 17.2			
2.0 TFSI	06/09→	147 / 200	Ate	2376381	[+] 23763 20.3		Luc	2391481	[o] 23914 17.2			
2.0 TFSI	05/10→	155 / 211	Ate	82062900			Luc	82509000				
			Ate	82071800				92137003	ø 288 x 12 x 35.8			
				92106703	ø 320 x 30 x 46.5							
				92106705	ø 320 x 30 x 46.5							
				TPM0008								
IBIZA II (6K1) 03/93→08/99												
632300			Kel	2088708	[–] 20887 17.3			91018200	ø 180 x 31	⊖ ABS		
1.0 i	09/96→08/99	37 / 50	Kel	82026700				91044700	ø 200 x 40	⊕ ABS		
				92009303	ø 239 x 10 x 38.6		Ate	97000500		⊖ ABS		
				TPM0008			Ate	97006500		⊕ ABS		
								84018205	bore ø 17.5 ø 180 x 31	⊖ ABS		
								84044706	bore ø 17.5 ø 200 x 40	⊕ ABS		
								94006600	ø 180,0 x 38.5	⊖ ABS		
								94006700	ø 200,0 x 49.8	⊕ ABS		
632400			Kel	2088708	[–] 20887 17.3	→6K-W-000500		91018200	ø 180 x 31	⊖ ABS		
1.3 i	03/93→08/99	40 / 54	VW	2186601	[–] 21866 15.3	6K-W-000500→		91044700	ø 200 x 40	⊕ ABS		
			VW	2186603	[–] 21866 19.7	⊕ ABS →6K-W-000500 ⊕ reinf.brake →6K-W-000500	Ate	97000500		⊖ ABS		
			Kel	82026700		→6K-W-000500	Ate	97006500		⊕ ABS		
			Ate	82062900		→6K-W-000500 ⊕ ABS		84018200	bore ø 17.5 ø 180 x 31	⊖ ABS		
				92009303	ø 239 x 10 x 38.6	→6K-W-000500		84018205	bore ø 17.5 ø 180 x 31	⊖ ABS		
				92010603	ø 239 x 12 x 35	⊕ ABS →6K-W-000500 ⊕ reinf.brake →6K-W-000500		84044706	bore ø 17.5 ø 200 x 40	⊕ ABS		
				92012103	ø 239 x 20 x 38.7	6K-W-000500→		94006600	ø 180,0 x 38.5	⊖ ABS		
				TPM0008				94006700	ø 200,0 x 49.8	⊕ ABS		
632500			Kel	2088708	[–] 20887 17.3	6K-TR099021→ →6K-V-241400		91018200	ø 180 x 31	⊖ ABS		
1.4	12/97→04/99	40 / 54	Kel	2088710	[–] 20887 19.7	⊕ ABS →6K-TR046588 ⊕ reinf.brake →6K-TR046588		91044700	ø 200 x 40	⊕ ABS		
			Kel	2088902	[–] 20889 17.3	→6K-TR099020	Ate	97000500		⊖ ABS		
			VW	2186601	[–] 21866 15.3	6K-V-241400→	Ate	97006500		⊕ ABS		
			VW	2186603	[–] 21866 19.7	⊕ ABS 6K-TR046589→ →6K-V-241400 ⊕ reinf.brake 6K-T-R046589→ →6K-V-241400		84044706	bore ø 17.5 ø 200 x 40	⊕ ABS		
								94006600	ø 180,0 x 38.5	⊖ ABS		
			Kel	82026700				94006700	ø 200,0 x 49.8	⊕ ABS		
			Ate	82062900		6K-TR046589→ →6K-V-241400 ⊕ ABS						
				92009303	ø 239 x 10 x 38.6	→6K-V-241400						
				92010603	ø 239 x 12 x 35	⊕ ABS →6K-V-241400 ⊕ reinf.brake →6K-V-241400						
				92012103	ø 239 x 20 x 38.7	6K-V-241400→						
				TPM0008								
632600			Kel	2088708	[–] 20887 17.3	6K-TR099021→ →6K-V-241400		91018200	ø 180 x 31	⊖ ABS		
1.4 i	09/93→08/99	44 / 60	Kel	2088710	[–] 20887 19.7	⊕ ABS →6K-TR046588 ⊕ reinf.brake →6K-TR046588		91044700	ø 200 x 40	⊕ ABS		

R - S

		kW / hp											
IBIZA II (6K1) 03/93→08/99													
1.4 i	09/93→08/99	632600 44 / 60	Kel		**2088902**	[–] 20889 17.3	→6K-TR099020	Ate		**97000500**		⊖ ABS
			VW		**2186601**	[–] 21866 15.3	6K-V-241400→	Ate		**97006500**		⊕ ABS
			VW		**2186603**	[–] 21866 19.7	⊕ ABS 6K-TR046589→ →6K-V-241400			**84018200**	bore ø 17.5 ø 180 x 31	⊖ ABS
							⊕ reinf.brake 6K-T-R046589→ →6K-V-241400			**84018205**	bore ø 17.5 ø 180 x 31	⊖ ABS
			Kel		**82026700**					**84044706**	bore ø 17.5 ø 200 x 40	⊕ ABS
			Ate		**82062900**		6K-TR046589→ →6K-V-241400 ⊕ ABS			**94006600**	ø 180,0 x 38.5	⊖ ABS
				PRO	**92009303**	ø 239 x 10 x 38.6	→6K-V-241400			**94006700**	ø 200,0 x 49.8	⊕ ABS
				PRO	**92010603**	ø 239 x 12 x 35	⊕ ABS →6K-V-241400					
							⊕ reinf.brake →6K-V-241400					
				PRO	**92012103**	ø 239 x 20 x 38.7	6K-V-241400→					
					TPM0008							
1.4 i 16V	06/97→08/99	632700 74 / 101	Kel		**2088708**	[–] 20887 17.3	→6K-W000500			**91018200**	ø 180 x 31	⊖ ABS
			VW		**2186601**	[–] 21866 15.3	6K-W000500→			**91044700**	ø 200 x 40	⊕ ABS
			VW		**2186603**	[–] 21866 19.7	⊕ ABS →6K-W000500	Ate		**97000500**		⊖ ABS
							⊕ reinf.brake →6K-W000500	Ate		**97006500**		⊕ ABS
			Kel		**82026700**		→6K-W-000500			**84018200**	bore ø 17.5 ø 180 x 31	⊖ ABS
			Ate		**82062900**		→6K-W000500 ⊕ ABS			**84018205**	bore ø 17.5 ø 180 x 31	⊖ ABS
				PRO	**92009303**	ø 239 x 10 x 38.6	→6K-W000500			**84044706**	bore ø 17.5 ø 200 x 40	⊕ ABS
				PRO	**92010603**	ø 239 x 12 x 35	⊕ ABS →6K-W000500			**94006600**	ø 180,0 x 38.5	⊖ ABS
							⊕ reinf.brake →6K-W000500			**94006700**	ø 200,0 x 49.8	⊕ ABS
				PRO	**92012103**	ø 239 x 20 x 38.7	6K-W000500→					
					TPM0008							
1.6 i	03/93→08/99	632800 55 / 75	Kel		**2088710**	[–] 20887 19.7	→6K-TR046558			**91018200**	ø 180 x 31	⊖ ABS
			VW		**2186601**	[–] 21866 15.3	vented disc			**91044700**	ø 200 x 40	⊕ ABS
			VW		**2186603**	[–] 21866 19.7	6K-TR046559→ solid disc	Ate		**97000500**		⊖ ABS
			Kel		**82026700**			Ate		**97006500**		⊕ ABS
			Luc		**82062800**					**84018200**	bore ø 17.5 ø 180 x 31	⊖ ABS
			Ate		**82062900**		6K-TR046559→			**84018205**	bore ø 17.5 ø 180 x 31	⊖ ABS
				PRO	**92010603**	ø 239 x 12 x 35				**84044706**	bore ø 17.5 ø 200 x 40	⊕ ABS
				PRO	**92012103**	ø 239 x 20 x 38.7				**94006600**	ø 180,0 x 38.5	⊖ ABS
					TPM0008					**94006700**	ø 200,0 x 49.8	⊕ ABS
1.6 i	09/94→06/99	632900 55 / 75	Kel		**2088707**	[–] 20887 15.3	⊖ Lucas			**91018200**	ø 180 x 31	⊖ ABS
			VW		**2186601**	[–] 21866 15.3	⊖ Lucas			**91044700**	ø 200 x 40	⊕ ABS
			Luc		**2194502**	[–] 21945 16.2	Lucas	Ate		**97000500**		⊖ ABS
			Kel		**82026700**			Ate		**97006500**		⊕ ABS
			Luc		**82062800**					**84018200**	bore ø 17.5 ø 180 x 31	⊖ ABS
			Ate		**82062900**		6K-TR046559→			**84018205**	bore ø 17.5 ø 180 x 31	⊖ ABS
				PRO	**92012103**	ø 239 x 20 x 38.7	⊖ Lucas			**84044706**	bore ø 17.5 ø 200 x 40	⊕ ABS
				PRO	**92036803**	ø 256 x 20 x 38.7	PR 1ZK Lucas			**94006600**	ø 180,0 x 38.5	⊖ ABS
					TPM0008					**94006700**	ø 200,0 x 49.8	⊕ ABS
1.6 i	04/96→08/99	633000 74 / 101	VW		**2186601**	[–] 21866 15.3	Ø 239 mm ⊕ disc-th. 20 mm			**91018200**	ø 180 x 31	⊖ ABS
			VW		**2186603**	[–] 21866 19.7	Ø 239 mm ⊕ disc-th. 12 mm			**91044700**	ø 200 x 40	⊕ ABS
			Luc		**2194502**	[–] 21945 16.2	Ø 256 mm	Ate		**97000500**		⊖ ABS

			kW / hp										
IBIZA II (6K1) 03/93→08/99													
1.6 i	04/96→08/99	633000	74 / 101	Luc	82062800			Ate	97006500		⊕ ABS
				Ate	82062900				84018200	bore ø 17.5 ø 180 x 31	⊖ ABS
				PRO	92010603	ø 239 x 12 x 35	⊕ 2186603		84018205	bore ø 17.5 ø 180 x 31	⊖ ABS
				PRO	92012103	ø 239 x 20 x 38.7	⊕ 2186601		84044706	bore ø 17.5 ø 200 x 40	⊕ ABS
				PRO	92036803	ø 256 x 20 x 38.7	⊕ 2194502		94006600	ø 180,0 x 38.5	⊖ ABS
					TPM0008				94006700	ø 200,0 x 49.8	⊕ ABS
1.8 i	03/93→08/99	633100	66 / 90	Kel	2088707	[–] 20887 15.3	6K-ZR003514→ →6K-ZR157804		91018200	ø 180 x 31	⊖ ABS
				Kel	2088710	[–] 20887 19.7	→6K-TR046558		91044700	ø 200 x 40	⊕ ABS
				VW	2186601	[–] 21866 15.3	6K-W-000500→	Ate	97000500		⊖ ABS
				VW	2186603	[–] 21866 19.7	6K-TR046559→ →6K-ZR003513 6K-ZR157805→ →6K-W-000500	Ate	97006500		⊕ ABS
				Kel	82026700				84018200	bore ø 17.5 ø 180 x 31	⊖ ABS
				Ate	82062900				84018205	bore ø 17.5 ø 180 x 31	⊖ ABS
				PRO	92010603	ø 239 x 12 x 35	→6K-ZR003513 6K-ZR157805→ →6K-W-000500		84044706	bore ø 17.5 ø 200 x 40	⊕ ABS
				PRO	92012103	ø 239 x 20 x 38.7	6K-ZR003514→ →6K-ZR157804 6K-W-000500→		94006600	ø 180,0 x 38.5	⊖ ABS
					TPM0008				94006700	ø 200,0 x 49.8	⊕ ABS
1.9 SDI	08/96→08/99	633200	47 / 64	VW	2186601	[–] 21866 15.3	vented disc		91018200	ø 180 x 31	⊖ ABS
				VW	2186603	[–] 21866 19.7	solid disc		91044700	ø 200 x 40	⊕ ABS
				Ate	82062900			Ate	97000500		⊖ ABS
				PRO	92010603	ø 239 x 12 x 35		Ate	97006500		⊕ ABS
				PRO	92012103	ø 239 x 20 x 38.7			84018205	bore ø 17.5 ø 180 x 31	⊖ ABS
					TPM0008				84044706	bore ø 17.5 ø 200 x 40	⊕ ABS
									94006600	ø 180,0 x 38.5	⊖ ABS
									94006700	ø 200,0 x 49.8	⊕ ABS
1.9 TDI	08/96→08/99	633300	66 / 90	Luc	2194502	[–] 21945 16.2		Luc	2355401	[–] 23554 15.2	⊕ rear disc brake
1.9 TDI	02/97→08/99		81 / 110	Luc	82062800			Luc	2355482	[–] 23554 15.2	⊕ rear disc brake
				PRO	92036803	ø 256 x 20 x 38.7		Luc	82033000		
					TPM0008			Luc	82062800		
									91044700	ø 200 x 40	⊕ rear drum brake
								Ate	97006500		⊕ rear drum brake
									84044706	bore ø 17.5 ø 200 x 40	⊕ rear drum brake
								PRO	92154203	ø 226 x 10 x 71.5	⊕ rear disc brake
								PRO	92041803	ø 226 x 10 x 71.5	⊕ rear disc brake
									94006700	ø 200,0 x 49.8	⊕ rear drum brake
2.0 i	03/93→08/99	633400	85 / 115	Luc	2016801	[–] 20168 16.2	→6K-TR184566	Luc	2355401	[–] 23554 15.2	
				Luc	2194502	[–] 21945 16.2	6K-TR184567→	Luc	2355482	[–] 23554 15.2	
				Luc	82062800			Luc	82033000		
				PRO	92036803	ø 256 x 20 x 38.7		Luc	82062800		
					TPM0008			PRO	92154203	ø 226 x 10 x 71.5	
								PRO	92041803	ø 226 x 10 x 71.5	
2.0 i 16V	08/96→08/99	633500	110 / 150	Luc	2016804	[–] 20168 19.6		Luc	2355402	[–] 23554 17.2	

R - S

		kW / hp										
IBIZA II (6K1) 03/93→08/99												
		633500	Luc	82062800			Luc	2355481	[–] 23554 17.2	
2.0 i 16V	08/96→08/99	110 / 150		92043500	ø 280 x 22 x 39.2		Luc	82033000		
				TPM0008			Luc	82062800		
								92154203	ø 226 x 10 x 71.5	
								92041803	ø 226 x 10 x 71.5	
IBIZA III (6K1) 08/99→02/02												
		633600	VW	2186601	[–] 21866 15.3			91044700	ø 200 x 40	
1.0	08/99→02/02	37 / 50								
1.0	06/00→02/02	50 / 68		92012103	ø 239 x 20 x 38.7		Ate	97006500		
1.0 16V	10/99→02/02	51 / 69								
1.4	08/99→02/02	44 / 60		TPM0008				84044706	bore ø 17.5 ø 200 x 40	
1.4 16V	05/00→02/02	55 / 75								
1.9 SDI	08/99→02/02	50 / 68						TPM0008		
								94022800	ø 200,0 x 50.5	
		633700	VW	2186601	[–] 21866 15.3	PR 1LG	Luc	2355402	[–] 23554 17.2	⊕ rear disc brake
1.4 16V	08/99→02/02	74 / 100	Luc	2194502	[–] 21945 16.2	PR 1ZK	Luc	2355481	[–] 23554 17.2	⊕ rear disc brake
			Luc	82062800		Lucas	Luc	82033000		
				92012103	ø 239 x 20 x 38.7	PR 1LG	Luc	82062800		
				92036803	ø 256 x 20 x 38.7	PR 1ZK		91044700	ø 200 x 40	⊕ rear drum brake
				TPM0008			Ate	97006500		⊕ rear drum brake
								83044701	bore ø 19 ø 200 x 40	⊕ rear drum brake
								84044703	bore ø 19 ø 200 x 40	⊕ rear drum brake
								92098203	ø 232 x 9 x 39.4	⊕ rear disc brake
								TPM0008		
								94022800	ø 200,0 x 50.5	⊕ rear drum brake ⊕ ABS
		633800	VW	2186601	[–] 21866 15.3	PR 1LG	Luc	2355402	[–] 23554 17.2	⊕ rear disc brake
1.6	08/99→02/02	55 / 75								
1.9 TDI	08/99→02/02	66 / 90	Luc	2194502	[–] 21945 16.2	PR 1ZK	Luc	2355481	[–] 23554 17.2	⊕ rear disc brake
			Luc	82062800		Lucas	Luc	82033000		
				92012103	ø 239 x 20 x 38.7	PR 1LG	Luc	82062800		
				92036803	ø 256 x 20 x 38.7	PR 1ZK		91044700	ø 200 x 40	⊕ rear drum brake
				TPM0008			Ate	97006500		⊕ rear drum brake
								84044706	bore ø 17.5 ø 200 x 40	⊕ rear drum brake
								92098203	ø 232 x 9 x 39.4	⊕ rear disc brake
								TPM0008		
								94022800	ø 200,0 x 50.5	⊕ rear drum brake ⊕ ABS
		633900	Luc	2194502	[–] 21945 16.2			91044700	ø 200 x 40	
1.6	08/99→02/02	74 / 101	Luc	82062800			Ate	97006500		
				92036803	ø 256 x 20 x 38.7			83044701	bore ø 19 ø 200 x 40	⊕ engine AKL ⊕ man. ⊕ engine APF,AEH,AUR
				TPM0008				84044703	bore ø 19 ø 200 x 40	⊕ engine AKL ⊕ man. ⊕ engine APF,AEH,AUR
								84044706	bore ø 17.5 ø 200 x 40	⊕ engine AKL ⊕ autom.
								TPM0008		
								94022800	ø 200,0 x 50.5	
		634000	Bre	2138102	[–] 21381 15	⊕ Cupra R	Luc	2355402	[–] 23554 17.2	
1.8 T 20V Cupra	07/00→02/02	115 / 156								

		kW / hp											
IBIZA III (6K1) 08/99→02/02													
		634000	Luc		2194502	[–] 21945 16.2	⊖ Cupra R	Luc		2355481	[–] 23554 17.2	
1.8 T 20V Cupra	07/00→02/02	115 / 156	Luc		82062800			Luc		82033000		
					92043500	ø 280 x 22 x 39.2	⊖ Cupra R	Luc		82062800		
					TPM0008				PRO	92098203	ø 232 x 9 x 39.4	
										TPM0008		
		634100	Luc		2016804	[–] 20168 19.6		Luc		2355402	[–] 23554 17.2	
1.9 TDI	08/99→02/02	81 / 110	Luc		82062800			Luc		2355481	[–] 23554 17.2	
					92043500	ø 280 x 22 x 39.2		Luc		82033000		
					TPM0008			Luc		82062800		
									PRO	92098203	ø 232 x 9 x 39.4	
										TPM0008		
IBIZA IV (6L1) 02/02→11/09													
		634200	Ate		2313001	[–] 23130 19.7				91044700	ø 200 x 40	
1.2	02/02→06/06	47 / 64										
1.2	06/07→05/08	44 / 60	Ate		2313081	[–] 23130 19.7		Ate		97006500		⊕ rear drum brake
1.2 12V	05/06→11/09	51 / 70	Ate		2313101	[+] 23131 19.7				84044703	bore ø 19 ø 200 x 40	→6L-7-108000
			Ate		2313181	[+] 23131 19.7				84044706	bore ø 17.5 ø 200 x 40	6L-7-108001→
			Ate		82062900					TPM0008		
				PRO	92082203	ø 256 x 22 x 36.5				94023800	ø 200,0 x 50.5	
					TPM0008							
		634300	Ate		2313001	[–] 23130 19.7		Luc		2355402	[–] 23554 17.2	⊕ rear disc brake
1.4 16V	02/02→12/07	55 / 75										
1.4 16V	02/02→11/09	74 / 100	Ate		2313081	[–] 23130 19.7		Luc		2355481	[–] 23554 17.2	⊕ rear disc brake
1.4 16V	05/06→11/09	63 / 86										
1.4 TDI	05/02→12/05	55 / 75										
1.4 TDI	05/05→11/09	51 / 70	Ate		2313101	[+] 23131 19.7		Luc		2382301	[+] 23823 17.2	⊕ rear disc brake
1.4 TDI	06/05→11/09	59 / 80										
1.6	02/03→11/09	74 / 101	Ate		2313181	[+] 23131 19.7		Luc		82037300		⊕ rear disc brake
1.6 16V	11/06→11/09	77 / 105										
1.9 SDI	02/02→12/05	47 / 64										
1.9 TDI	02/02→11/09	74 / 100	Ate		82062900			Luc		82062800		⊕ rear disc brake
				PRO	92082203	ø 256 x 22 x 36.5				91044700	ø 200 x 40	⊕ rear drum brake
					TPM0008			Ate		97006500		⊕ rear drum brake
										84044703	bore ø 19 ø 200 x 40	⊕ rear drum brake →6L-7-108000
										84044706	bore ø 17.5 ø 200 x 40	6L-7-108001→
									PRO	92082503	ø 232 x 9 x 39.3	⊕ rear disc brake
										TPM0008		
										94023800	ø 200,0 x 50.5	⊕ rear drum brake
		634400	Ate		2191102	[–] 21911 20.6	Teves	Luc		2355402	[–] 23554 17.2	
1.8 T Cupra R	01/04→02/08	132 / 180	Lkh		2497401	[–] 24974 16.7	AP Racing	Luc		2355481	[–] 23554 17.2	
			Ate		2339201	[+] 23392 20.6		Luc		2382301	[+] 23823 17.2	
			Ate		82029300		Teves	Luc		82037300		
			Ate		82062900		Teves	Luc		82062800		
				PRO	92098503	ø 312 x 25 x 34			PRO	92082503	ø 232 x 9 x 39.3	
					TPM0008					TPM0008		
		634500	Luc		2358101	[–] 23581 19		Luc		2355402	[–] 23554 17.2	
1.8 T FR	12/03→05/08	110 / 150										
1.9 TDI	02/02→11/09	96 / 131	Luc		2358102	[+] 23581 19		Luc		2355481	[–] 23554 17.2	
2.0	04/02→11/09	85 / 116										

30 kW / hp													
IBIZA IV (6L1) 02/02→11/09													
634500													
1.8 T FR	12/03→05/08	110 / 150	Luc		**82055400**				Luc		**2382301**	[+] 23823 17.2	
1.9 TDI	02/02→11/09	96 / 131	Luc		**82063500**				Luc		**82037300**		
2.0	04/02→11/09	85 / 116		PRO	**92106603**	ø 288 x 25 x 34.4			Luc		**82062800**		
					TPM0008					PRO	**92082503**	ø 232 x 9 x 39.3	
											TPM0008		
634600			Ate		**2191102**	[–] 21911 20.6	Teves		Luc		**2355402**	[–] 23554 17.2	
1.9 TDI Cupra R	03/04→02/08	118 / 160	Lkh		**2497401**	[–] 24974 16.7	AP Racing		Luc	epad	**2355481**	[–] 23554 17.2	
			Ate		**82029300**		Teves		Luc		**2382301**	[+] 23823 17.2	
			Ate		**82062900**		Teves		Luc		**82037300**		
				PRO	**92098503**	ø 312 x 25 x 34			Luc		**82062800**		
					TPM0008					PRO	**92082503**	ø 232 x 9 x 39.3	
											TPM0008		
IBIZA V (6J5) 03/08→													
634700			Ate		**2313001**	[–] 23130 19.7			Luc		**2355402**	[–] 23554 17.2	⊕ ESP
1.2	03/08→	51 / 70											
1.4	03/08→	63 / 85	Ate	epad	**2313081**	[–] 23130 19.7			Luc	epad	**2355481**	[–] 23554 17.2	⊕ ESP
1.4 TDI	07/08→06/10	59 / 80	Ate		**2313101**	[+] 23131 19.7			Luc		**82037300**		⊕ ESP
			Ate	epad	**2313181**	[+] 23131 19.7			Luc		**82063300**		⊕ ESP
			Ate		**82062900**						**91044700**	ø 200 x 40	⊖ ESP
				PRO	**92082203**	ø 256 x 22 x 36.5			Ate		**97006500**		⊖ ESP
					TPM0008						**84044703**	bore ø 19 ø 200 x 40	⊖ ESP
										PRO	**92082503**	ø 232 x 9 x 39.3	⊕ ESP
											TPM0008		
											94023800	ø 200,0 x 50.5	⊖ ESP
634800			Ate		**2313001**	[–] 23130 19.7					**91044700**	ø 200 x 40	
1.2	07/09→	44 / 60											
1.2 TDI	05/10→	55 / 75	Ate	epad	**2313081**	[–] 23130 19.7			Ate		**97006500**		
			Ate		**2313101**	[+] 23131 19.7					**84044703**	bore ø 19 ø 200 x 40	
			Ate	epad	**2313181**	[+] 23131 19.7					**TPM0008**		
			Ate		**82062900**						**94023800**	ø 200,0 x 50.5	
				PRO	**92082203**	ø 256 x 22 x 36.5							
					TPM0008								
634900			Ate		**2313001**	[–] 23130 19.7			Luc		**2355402**	[–] 23554 17.2	
1.2 TSI	09/10→	77 / 105											
1.2 TSI	08/12→	63 / 86	Ate	epad	**2313081**	[–] 23130 19.7			Luc	epad	**2355481**	[–] 23554 17.2	
1.6	05/08→	77 / 105											
1.6 LPG	05/11→	60 / 81	Ate		**2313101**	[+] 23131 19.7			Luc		**82037300**		
1.6 TDI	05/09→	66 / 90											
1.6 TDI	05/10→06/10	55 / 75	Ate	epad	**2313181**	[+] 23131 19.7			Luc		**82063300**		
1.9 TDI	07/08→06/10	66 / 90											
			Ate		**82062900**					PRO	**92082503**	ø 232 x 9 x 39.3	
				PRO	**92082203**	ø 256 x 22 x 36.5					**TPM0008**		
					TPM0008								
635000			Ate		**2358701**	[+] 23587 20.3			Luc		**2355402**	[–] 23554 17.2	
1.4 TSI	06/09→	110 / 150											
1.6 TDI	05/09→	77 / 105	Ate	epad	**2358781**	[+] 23587 20.3			Luc	epad	**2355481**	[–] 23554 17.2	
1.9 TDI	03/08→06/10	77 / 105											
2.0	10/08→	85 / 115											
2.0 TDI	01/10→	105 / 143	Ate		**82062900**				Luc		**82037300**		

		kW / hp									
IBIZA V (6J5) 03/08→											
		635000	Ate		**82076800**			Luc		**82063300**		
1.4 TSI	06/09→	110 / 150		PRO	**92106603**	ø 288 x 25 x 34.4			PRO	**92082503**	ø 232 x 9 x 39.3	
1.6 TDI	05/09→	77 / 105			**TPM0008**					**TPM0008**		
1.9 TDI	03/08→06/10	77 / 105										
2.0	10/08→	85 / 115										
2.0 TDI	01/10→	105 / 143										
		635100	Ate		**2313001**	[–] 23130 19.7	PR 1ZG	Luc		**2355402**	[–] 23554 17.2	PR 1KT,1KV
1.4 TSI	10/13→	103 / 140	Ate	epad	**2313081**	[–] 23130 19.7	PR 1ZG	Luc	epad	**2355481**	[–] 23554 17.2	PR 1KT,1KV
			Lkh		**2497401**	[–] 24974 16.7	PR 1LV		PRO	**92082503**	ø 232 x 9 x 39.3	PR 1KT,1KV
			Ate		**2358701**	[+] 23587 20.3	15" -brake			**TPM0008**		
			Ate	epad	**2358781**	[+] 23587 20.3	15" -brake			**94023800**	ø 200,0 x 50.5	PR 1KM
			Ate		**82076800**		15" -brake					
				PRO	**92082203**	ø 256 x 22 x 36.5	PR 1ZG					
				PRO	**92098503**	ø 312 x 25 x 34	PR 1LV					
				PRO	**92106603**	ø 288 x 25 x 34.4	15" -brake					
					TPM0008							
IBIZA V SPORTCOUPE (6J1) 07/08→											
		635200	Ate		**2313001**	[–] 23130 19.7		Luc		**2355402**	[–] 23554 17.2	⊕ ESP
1.2	07/08→	51 / 70	Ate	epad	**2313081**	[–] 23130 19.7		Luc	epad	**2355481**	[–] 23554 17.2	⊕ ESP
1.4	07/08→	63 / 85	Ate		**2313101**	[+] 23131 19.7		Luc		**82037300**		⊕ ESP
1.4 TDI	07/08→06/10	59 / 80	Ate	epad	**2313181**	[+] 23131 19.7		Luc		**82063300**		⊕ ESP
			Ate		**82062900**					**91044700**	ø 200 x 40	⊖ ESP
				PRO	**92082203**	ø 256 x 22 x 36.5		Ate		**97006500**		⊖ ESP
					TPM0008					**84044703**	bore ø 19 ø 200 x 40	⊖ ESP
									PRO	**92082503**	ø 232 x 9 x 39.3	⊕ ESP
										TPM0008		
										94023800	ø 200,0 x 50.5	⊖ ESP
		635300	Ate		**2313001**	[–] 23130 19.7				**91044700**	ø 200 x 40	
1.2	07/09→	44 / 60	Ate	epad	**2313081**	[–] 23130 19.7		Ate		**97006500**		
1.2 TDI	05/10→	55 / 75	Ate		**2313101**	[+] 23131 19.7				**84044703**	bore ø 19 ø 200 x 40	
			Ate	epad	**2313181**	[+] 23131 19.7				**TPM0008**		
			Ate		**82062900**					**94023800**	ø 200,0 x 50.5	
				PRO	**92082203**	ø 256 x 22 x 36.5						
					TPM0008							
		635400	Ate		**2313001**	[–] 23130 19.7		Luc		**2355402**	[–] 23554 17.2	
1.2 TSI	09/10→	77 / 105	Ate	epad	**2313081**	[–] 23130 19.7		Luc	epad	**2355481**	[–] 23554 17.2	
1.6	07/08→	77 / 105	Ate		**2313101**	[+] 23131 19.7		Luc		**82037300**		
1.6 LPG	05/11→	60 / 81	Ate	epad	**2313181**	[+] 23131 19.7		Luc		**82063300**		
1.6 TDI	05/09→	66 / 90	Ate		**82062900**				PRO	**92082503**	ø 232 x 9 x 39.3	
1.6 TDI	05/10→06/10	55 / 75		PRO	**92082203**	ø 256 x 22 x 36.5				**TPM0008**		
1.9 TDI	07/08→06/10	66 / 90			**TPM0008**							
		635500	Ate		**2313001**	[–] 23130 19.7	PR 1ZG	Luc		**2355402**	[–] 23554 17.2	PR 1KT,1KV
1.2 TSI	08/12→	63 / 86	Ate	epad	**2313081**	[–] 23130 19.7	PR 1ZG	Luc	epad	**2355481**	[–] 23554 17.2	PR 1KT,1KV
1.4 TSI	10/13→	103 / 140										

		kW / hp											
IBIZA V SPORTCOUPE (6J1) 07/08→													
		635500	Lkh		**2497401**	[–] 24974 16.7	PR 1LV		PRO	**92082503**	ø 232 x 9 x 39.3	PR 1KT,1KV
1.2 TSI	08/12→	63 / 86										
1.4 TSI	10/13→	103 / 140	Ate		**2358701**	[+] 23587 20.3	15" -brake			**TPM0008**		
			Ate	epad	**2358781**	[+] 23587 20.3	15" -brake			**94023800**	ø 200,0 x 50.5	PR 1KM
			Ate		**82076800**		15" -brake					
				PRO	**92082203**	ø 256 x 22 x 36.5	PR 1ZG					
				PRO	**92098503**	ø 312 x 25 x 34	PR 1LV					
				PRO	**92106603**	ø 288 x 25 x 34.4	15" -brake					
					TPM0008							
		635600	Ate		**2358701**	[+] 23587 20.3		Luc		**2355402**	[–] 23554 17.2	
1.4 TSI	06/09→	110 / 150										
1.4 TSI Cupra	06/09→	132 / 180	Ate	epad	**2358781**	[+] 23587 20.3		Luc	epad	**2355481**	[–] 23554 17.2	
1.6 TDI	05/09→	77 / 105										
1.9 TDI	07/08→06/10	77 / 105										
2.0	10/08→	85 / 115	Ate		**82062900**			Luc		**82037300**		
2.0 TDI	01/10→	105 / 143										
			Ate		**82076800**			Luc		**82063300**		
				PRO	**92106603**	ø 288 x 25 x 34.4			PRO	**92082503**	ø 232 x 9 x 39.3	
					TPM0008					**TPM0008**		
IBIZA V ST (6J8) 03/10→													
		635700	Ate		**2313001**	[–] 23130 19.7				**91044700**	ø 200 x 40	
1.2	05/10→	44 / 60										
1.2 TDI	04/10→	55 / 75	Ate	epad	**2313081**	[–] 23130 19.7		Ate		**97006500**		
			Ate		**2313101**	[+] 23131 19.7				**84044703**	bore ø 19 ø 200 x 40	
			Ate	epad	**2313181**	[+] 23131 19.7				**TPM0008**		
			Ate		**82062900**					**94023800**	ø 200,0 x 50.5	
				PRO	**92082203**	ø 256 x 22 x 36.5						
					TPM0008							
		635800	Ate		**2313001**	[–] 23130 19.7		Luc		**2355402**	[–] 23554 17.2	⊕ ESP
1.2	05/10→	51 / 70										
1.4	03/10→	63 / 85	Ate	epad	**2313081**	[–] 23130 19.7		Luc	epad	**2355481**	[–] 23554 17.2	⊕ ESP
			Ate		**2313101**	[+] 23131 19.7		Luc		**82037300**		⊕ ESP
			Ate	epad	**2313181**	[+] 23131 19.7		Luc		**82063300**		⊕ ESP
			Ate		**82062900**					**91044700**	ø 200 x 40	⊖ ESP
				PRO	**92082203**	ø 256 x 22 x 36.5		Ate		**97006500**		⊖ ESP
					TPM0008					**84044703**	bore ø 19 ø 200 x 40	⊖ ESP
									PRO	**92082503**	ø 232 x 9 x 39.3	⊕ ESP
										TPM0008		
										94023800	ø 200,0 x 50.5	⊖ ESP
		635900	Ate		**2313001**	[–] 23130 19.7		Luc		**2355402**	[–] 23554 17.2	
1.2 TSI	09/10→	77 / 105										
1.2 TSI	09/12→	63 / 86	Ate	epad	**2313081**	[–] 23130 19.7		Luc	epad	**2355481**	[–] 23554 17.2	
1.6	02/12→	77 / 105										
1.6 TDI	03/10→	66 / 90	Ate		**2313101**	[+] 23131 19.7		Luc		**82037300**		
			Ate	epad	**2313181**	[+] 23131 19.7		Luc		**82063300**		
			Ate		**82062900**				PRO	**92082503**	ø 232 x 9 x 39.3	
				PRO	**92082203**	ø 256 x 22 x 36.5				**TPM0008**		
					TPM0008							
		636000	Ate		**2358701**	[+] 23587 20.3		Luc		**2355402**	[–] 23554 17.2	
1.4 TSI	02/12→	110 / 150										
1.6 TDI	03/10→	77 / 105										

		kW / hp											
IBIZA V ST (6J8) 03/10→													
		636000	Ate		2358781	[+] 23587 20.3		Luc		2355481	[–] 23554 17.2	
1.4 TSI	02/12→	110 / 150	Ate		82062900			Luc		82037300		
1.6 TDI	03/10→	77 / 105	Ate		82076800			Luc		82063300		
				PRO	92106603	ø 288 x 25 x 34.4			PRO	92082503	ø 232 x 9 x 39.3	
					TPM0008					TPM0008		
		636100	Ate		2313001	[–] 23130 19.7	PR 1ZG	Luc		2355402	[–] 23554 17.2	PR 1KT,1KV
1.4 TSI	10/13→	103 / 140	Ate	epad	2313081	[–] 23130 19.7	PR 1ZG	Luc	epad	2355481	[–] 23554 17.2	PR 1KT,1KV
			Lkh		2497401	[–] 24974 16.7	PR 1LV		PRO	92082503	ø 232 x 9 x 39.3	PR 1KT,1KV
			Ate		2358701	[+] 23587 20.3	15" -brake			TPM0008		
			Ate	epad	2358781	[+] 23587 20.3	15" -brake			94023800	ø 200,0 x 50.5	PR 1KM
			Ate		82076800		15" -brake					
				PRO	92082203	ø 256 x 22 x 36.5	PR 1ZG					
				PRO	92098503	ø 312 x 25 x 34	PR 1LV					
				PRO	92106603	ø 288 x 25 x 34.4	15" -brake					
					TPM0008							
IBIZA Mk II (6K1) 03/93→08/99 → IBIZA II (6K1), Page 1027													
IBIZA Mk III (6K1) 08/99→02/02 → IBIZA III (6K1), Page 1030													
IBIZA Mk IV (6L1) 02/02→11/09 → IBIZA IV (6L1), Page 1031													
INCA (6K9) 11/95→06/03													
		636200	Luc		2194502	[–] 21945 16.2		Ate		91052400	ø 230 x 32	
1.4 16V	04/00→06/03	55 / 75	Luc		82062800			Ate		97011300		
1.6	08/99→04/02	70 / 95		PRO	92036803	ø 256 x 20 x 38.7		Ate		84052401	bore ø 20.6 ø 230 x 32	
										94029500	ø 230 x 39	
		636300	Luc		2016804	[–] 20168 19.6	→9K-T-011100	Ate		91044400	ø 230 x 40	→9K-X-023407
1.4 i	11/95→06/03	44 / 60	Luc		2194502	[–] 21945 16.2	9K-T-011101→	Ate		91052400	ø 230 x 32	9K-X-023408→
1.9 D	11/95→06/03	47 / 64	Luc		82062800			Ate		97006600		→9K-X-023407
1.9 SDI	11/95→06/03	47 / 64		PRO	92041703	ø 256 x 13 x 39.2	→9K-T-011100	Ate		97011300		9K-X-023408→
				PRO	92036803	ø 256 x 20 x 38.7	9K-T-011101→	Ate		84044400	bore ø 20.6 ø 230 x 40	→9K-X-023407
								Ate		84052401	bore ø 20.6 ø 230 x 32	9K-X-023408→
										94029500	ø 230 x 39	9K-X-023408→
										94018900	ø 230,0 x 51	→9K-X-023407
		636400	Luc		2194502	[–] 21945 16.2		Ate		91044400	ø 230 x 40	→9K-X-023407
1.6 i	06/97→09/00	55 / 75	Luc		82062800			Ate		91052400	ø 230 x 32	9K-X-023408→
1.7 D	09/96→06/03	42 / 57		PRO	92036803	ø 256 x 20 x 38.7		Ate		97006600		→9K-X-023407
1.9 TDI	09/96→06/03	66 / 90						Ate		97011300		9K-X-023408→
								Ate		84044400	bore ø 20.6 ø 230 x 40	→9K-X-023407
								Ate		84052401	bore ø 20.6 ø 230 x 32	9K-X-023408→
										94029500	ø 230 x 39	9K-X-023408→
										94018900	ø 230,0 x 51	→9K-X-023407
LEON (1M1) 11/99→06/06													
		636500	Ate		2313001	[–] 23130 19.7	→1M-YB071087 →1M-YR006417	Luc		2355402	[–] 23554 17.2	
1.4 16V	11/99→06/06	55 / 75											

		kW / hp											
LEON (1M1) 11/99→06/06													
		636500	Ate		**2313081**	[–] 23130 19.7	→1M-YB071087 →1M-YR006417	Luc		**2355481**	[–] 23554 17.2	
1.4 16V	11/99→06/06	55 / 75	Ate		**2313101**	[+] 23131 19.7	1M-YB071088→ 1M-YR006418→	Luc		**82037300**		
			Ate		**2313181**	[+] 23131 19.7	1M-YB071088→ 1M-YR006418→	Luc		**82063300**		
			Ate		**82062900**				PRO	**92082503**	ø 232 x 9 x 39.3	
				PRO	**92082203**	ø 256 x 22 x 36.5				**TPM0008**		
					TPM0008							
		636600	Ate		**2313001**	[–] 23130 19.7		Luc		**2355402**	[–] 23554 17.2	
1.6	11/99→06/06	74 / 100										
1.6	10/05→06/06	75 / 102	Ate		**2313081**	[–] 23130 19.7		Luc		**2355481**	[–] 23554 17.2	
			Ate		**2313101**	[+] 23131 19.7		Luc		**82037300**		Ø 232 mm PR 1KK,1KP
			Ate		**2313181**	[+] 23131 19.7		Luc		**82502100**		Ø 256 mm PR 1KY,2EE,2EM
			Ate		**82062900**			Luc		**82063300**		
				PRO	**92082203**	ø 256 x 22 x 36.5	PR 1LQ		PRO	**92082503**	ø 232 x 9 x 39.3	PR 1KP,1KK
				PRO	**92082303**	ø 280 x 22 x 36.5	PR 1LR,1LS		PRO	**92098603**	ø 256 x 22 x 36.7	PR 1KY,2EE,2EM
					TPM0008					**TPM0008**		
		636700	Ate		**2313001**	[–] 23130 19.7		Luc		**2355402**	[–] 23554 17.2	
1.6 16 V	09/00→06/06	77 / 105										
1.9 SDI	11/99→06/06	50 / 68	Ate		**2313081**	[–] 23130 19.7		Luc		**2355481**	[–] 23554 17.2	
1.9 TDI	11/99→06/06	66 / 90										
1.9 TDI	11/99→06/06	81 / 110	Ate		**2313101**	[+] 23131 19.7		Luc		**82037300**		
			Ate		**2313181**	[+] 23131 19.7		Luc		**82063300**		
			Ate		**82062900**				PRO	**92082503**	ø 232 x 9 x 39.3	
				PRO	**92082203**	ø 256 x 22 x 36.5	PR 1LQ			**TPM0008**		
				PRO	**92082303**	ø 280 x 22 x 36.5	PR 1LS					
					TPM0008							
		636800	Ate		**2313001**	[–] 23130 19.7		Luc		**2355402**	[–] 23554 17.2	
1.8 20V	11/99→06/06	92 / 125	Ate		**2313081**	[–] 23130 19.7		Luc		**2355481**	[–] 23554 17.2	
			Ate		**2313101**	[+] 23131 19.7		Luc		**82037300**		
			Ate		**2313181**	[+] 23131 19.7		Luc		**82063300**		
			Ate		**82029300**				PRO	**92082503**	ø 232 x 9 x 39.3	
			Ate		**82062900**					**TPM0008**		
				PRO	**92082303**	ø 280 x 22 x 36.5						
					TPM0008							
		636900	Ate		**2339201**	[+] 23392 20.6		Luc		**2355402**	[–] 23554 17.2	
1.8 20V T	11/99→06/06	132 / 180	Ate		**82029300**			Luc		**2355481**	[–] 23554 17.2	
			Ate		**82062900**			Luc		**82037300**		
				PRO	**92098503**	ø 312 x 25 x 34		Luc		**82063300**		
					TPM0008				PRO	**92082503**	ø 232 x 9 x 39.3	
										TPM0008		
		637000	Ate		**2191102**	[–] 21911 20.6		Luc		**2355402**	[–] 23554 17.2	
1.8 20V T 4	11/99→06/06	132 / 180	Ate		**2339201**	[+] 23392 20.6		Luc		**2355481**	[–] 23554 17.2	
			Ate		**82029300**			Luc		**82502100**		
			Ate		**82062900**			Luc		**82063300**		

		kW / hp									
LEON (1M1) 11/99→06/06											
	637000			92098503	ø 312 x 25 x 34	PR 1LJ,1ZQ			92098603	ø 256 x 22 x 36.7	
1.8 20V T 4	11/99→06/06	132 / 180		92106603	ø 288 x 25 x 34.4	PR 1LE,1LN,1ZE,1ZH PR 1ZD			TPM0008		
				TPM0008							
	637100		Ate	2339201	[+] 23392 20.6	Ø 312 mm	Luc		2355402	[–] 23554 17.2	
1.8 T Cupra R	02/02→06/06	154 / 209	Bre	2414301	[+] 24143 15	Ø 323 mm	Luc		2355481	[–] 23554 17.2	
			Ate	82029300		Teves	Luc		82502100		
			Ate	82062900		Teves	Luc		82063300		
				92098503	ø 312 x 25 x 34	Teves			92098603	ø 256 x 22 x 36.7	
				92168903	ø 323 x 28 x 34.2	Brembo -brake			TPM0008		
				TPM0008							
	637200		Bre	2414301	[+] 24143 15	Ø 323 mm	Luc		2355402	[–] 23554 17.2	
1.8 T Cupra R	07/03→06/06	165 / 225		92168903	ø 323 x 28 x 34.2	Brembo -brake	Luc		2355481	[–] 23554 17.2	
				TPM0008			Luc		82502100		
							Luc		82063300		
									92098603	ø 256 x 22 x 36.7	
									TPM0008		
	637300		Ate	2191102	[–] 21911 20.6		Luc		2355402	[–] 23554 17.2	
1.8 Turbo 4x4	05/02→05/03	154 / 209									
2.8	05/02→06/04	150 / 204	Ate	2339201	[+] 23392 20.6		Luc		2355481	[–] 23554 17.2	
			Ate	82029300			Luc		82502100		
			Ate	82062900			Luc		82063300		
				92098503	ø 312 x 25 x 34				92098603	ø 256 x 22 x 36.7	
				TPM0008					TPM0008		
	637400		Ate	2339201	[+] 23392 20.6		Luc		2355402	[–] 23554 17.2	
1.9 TDI	02/01→06/06	110 / 150									
1.9 TDI	05/03→06/06	96 / 130	Ate	82029300			Luc		2355481	[–] 23554 17.2	
			Ate	82062900			Luc		82037300		
				92106603	ø 288 x 25 x 34.4		Luc		82063300		
				TPM0008					92082503	ø 232 x 9 x 39.3	
									TPM0008		
	637500		Ate	2313001	[–] 23130 19.7		Luc		2355402	[–] 23554 17.2	
1.9 TDI	10/05→06/06	74 / 100	Ate	2313081	[–] 23130 19.7		Luc		2355481	[–] 23554 17.2	
			Ate	2313101	[+] 23131 19.7		Luc		82037300		
			Ate	2313181	[+] 23131 19.7		Luc		82063300		
			Ate	82062900					92082503	ø 232 x 9 x 39.3	
				92082303	ø 280 x 22 x 36.5				TPM0008		
				TPM0008							
	637600		Ate	2339201	[+] 23392 20.6		Luc		2355402	[–] 23554 17.2	
1.9 TDI Syncro	05/02→06/06	110 / 150									
2.8 Cupra 4	02/01→06/06	150 / 204	Ate	82029300			Luc		2355481	[–] 23554 17.2	
			Ate	82062900			Luc		82502100		
				92098503	ø 312 x 25 x 34		Luc		82063300		
				TPM0008					92098603	ø 256 x 22 x 36.7	

R - S

		kW / hp											
LEON (1M1) 11/99→06/06													
		637600											
1.9 TDI Syncro	05/02→06/06	110 / 150								TPM0008			
2.8 Cupra 4	02/01→06/06	150 / 204											
		637700	Ate		2191102	[–] 21911 20.6		Luc		2355402	[–] 23554 17.2		
2.3 VR5	09/00→11/03	125 / 170											
			Ate		2339201	[+] 23392 20.6		Luc		2355481	[–] 23554 17.2		
			Ate		82029300			Luc		82037300		Ø 232 mm PR 1KK,1KP	
			Ate		82062900			Luc		82502100		Ø 256 mm PR 1KY,2EE,2EM	
				PRO	92098503	ø 312 x 25 x 34	PR 1LJ,1ZQ	Luc		82063300			
				PRO	92106603	ø 288 x 25 x 34.4	PR 1LE,1LN,1ZE,1ZH PR 1ZD		PRO	92082503	ø 232 x 9 x 39.3	PR 1KP,1KK	
					TPM0008				PRO	92098603	ø 256 x 22 x 36.7	PR 1KY,2EE,2EM	
										TPM0008			
LEON (1P1) 05/05→05/10													
		637800	Ate		2313101	[+] 23131 19.7		Luc		2355402	[–] 23554 17.2		
1.2 TSI	02/10→	77 / 105											
			Ate	epad	2313181	[+] 23131 19.7		Luc	epad	2355481	[–] 23554 17.2		
				PRO	92120703	ø 280 x 22 x 49.9		Luc		82037300			
				PRO	92120705	ø 280 x 22 x 49.9			PRO	92120903	ø 255 x 10 x 51.6		
					TPM0008					TPM0008			
		637900	Ate		2313101	[+] 23131 19.7		Luc		2355402	[–] 23554 17.2		
1.4 16V	06/06→	63 / 86											
1.6	07/05→	75 / 102											
1.6 LPG	12/09→	75 / 102	Ate	epad	2313181	[+] 23131 19.7		Luc	epad	2355481	[–] 23554 17.2		
1.6 MultiFuel	11/10→	75 / 102											
1.6 TDI	02/10→	77 / 105	Ate		82062900			Luc		82037300			
1.6 TDI	11/10→	66 / 90											
1.9 TDi	10/05→	81 / 110		PRO	92120703	ø 280 x 22 x 49.9		Luc		82063300			
1.9 TDI	07/05→	77 / 105											
1.9 TDI	06/07→	66 / 90		PRO	92120705	ø 280 x 22 x 49.9			PRO	92120903	ø 255 x 10 x 51.6		
					TPM0008					TPM0008			
		638000	Ate		2358701	[+] 23587 20.3		Luc		2355402	[–] 23554 17.2		
1.4 TSI	11/07→	92 / 125											
1.8 TSI	06/07→	118 / 160											
2.0 FSI	07/05→05/10	110 / 150	Ate	epad	2358781	[+] 23587 20.3		Luc	epad	2355481	[–] 23554 17.2		
2.0 TDI	10/05→	103 / 140											
2.0 TDI 16V	07/05→	103 / 140	Ate		82062900			Luc		82037300			
				PRO	92120803	ø 288 x 25 x 49.8		Luc		82063300			
				PRO	92120805	ø 288 x 25 x 49.8			PRO	92120903	ø 255 x 10 x 51.6		
					TPM0008					TPM0008			
		638100	Ate		2313101	[+] 23131 19.7	PR 1ZF,1ZM	Luc		2355402	[–] 23554 17.2	PR 1KD	
1.8	09/08→12/09	96 / 130											
1.8	09/09→	119 / 162	Ate	epad	2313181	[+] 23131 19.7	PR 1ZF,1ZM	Luc	epad	2355481	[–] 23554 17.2	PR 1KD	
2.0 FSI	09/09→	157 / 214											
			Ate		2358701	[+] 23587 20.3	PR 1ZE,1ZA,1LJ	Bos		2456301	[–] 24563 17.7	PR 1KS,1KT	
			Ate	epad	2358781	[+] 23587 20.3	PR 1ZE,1ZA,1LJ	Luc		2391401	[o] 23914 17.2	PR 1KZ,1KY	
			Ate		2391301	[+] 23913 20.3	PR 1LB	Luc	epad	2391481	[o] 23914 17.2	PR 1KZ,1KY	
			Ate		82076800		PR 1ZE,1ZA,1LJ	Bos		82054300		PR 1KS,1KT	
				PRO	92120503	ø 312 x 25 x 49.7	PR 1ZA,1LJ		PRO	92120903	ø 255 x 10 x 51.6	PR 1KD	
				PRO	92120603	ø 345 x 30 x 49.9	PR 1LB		PRO	92140803	ø 282 x 12 x 48.5	PR 1KZ,1KY	
				PRO	92120703	ø 280 x 22 x 49.9	PR 1ZF,1ZM		PRO	92224903	ø 272 x 10 x 48.3	PR 1KS,1KT	
				PRO	92120705	ø 280 x 22 x 49.9	PR 1ZF,1ZM			TPM0008			
				PRO	92120803	ø 288 x 25 x 49.8	PR 1ZE						
				PRO	92120805	ø 288 x 25 x 49.8	PR 1ZE						
					TPM0008								

LEON (1P1) 05/05→05/10

2.0 Cupra R	09/09→	638200 195 / 265	Ate		2380101	[+] 23801 20.3		Luc		2391401	[o] 23914 17.2	
2.0 TFSI	11/06→	177 / 240	Ate	epad	2380181	[+] 23801 20.3		Luc	epad	2391481	[o] 23914 17.2	
			Ate		82062900			Luc		82509000		
				PRO	92120603	ø 345 x 30 x 49.9			PRO	92140803	ø 282 x 12 x 48.5	
					TPM0008					TPM0008		
2.0 TDI	07/05→05/10	638300 100 / 136	Ate		2358701	[+] 23587 20.3		Luc		2355402	[–] 23554 17.2	
			Ate	epad	2358781	[+] 23587 20.3		Luc	epad	2355481	[–] 23554 17.2	
			Ate		82062900			Luc		82037300		
			Ate		82076800			Luc		82063300		
				PRO	92120803	ø 288 x 25 x 49.8			PRO	92120903	ø 255 x 10 x 51.6	
				PRO	92120805	ø 288 x 25 x 49.8				TPM0008		
					TPM0008							
2.0 TDI	05/06→	638400 125 / 170	Ate		2358701	[+] 23587 20.3		Luc		2355402	[–] 23554 17.2	
			Ate	epad	2358781	[+] 23587 20.3		Luc	epad	2355481	[–] 23554 17.2	
			Ate		82062900			Luc		82037300		
			Ate		82076800			Luc		82063300		
				PRO	92120503	ø 312 x 25 x 49.7			PRO	92120903	ø 255 x 10 x 51.6	
					TPM0008					TPM0008		
2.0 TFSI	05/05→03/09	638500 147 / 200	Ate		2358701	[+] 23587 20.3		Luc		2355402	[–] 23554 17.2	PR 1KD Ø 255 mm
2.0 TFSI	09/05→05/06	136 / 185	Ate	epad	2358781	[+] 23587 20.3		Luc	epad	2355481	[–] 23554 17.2	PR 1KD Ø 255 mm
			Ate		82062900			Luc		2391401	[o] 23914 17.2	PR 1KZ,1KY Ø 286 mm
			Ate		82076800			Luc	epad	2391481	[o] 23914 17.2	PR 1KZ,1KY Ø 286 mm
				PRO	92120503	ø 312 x 25 x 49.7		Luc		82037300		PR 1KD
					TPM0008			Luc		82509000		PR 1KZ,1KY Ø 286 mm
								Luc		82063300		PR 1KD
									PRO	92120903	ø 255 x 10 x 51.6	PR 1KD
									PRO	92140803	ø 282 x 12 x 48.5	PR 1KZ,1KY
										TPM0008		
2.0 TFSI	06/09→	638600 155 / 211	Ate		2358701	[+] 23587 20.3		Bos		2456301	[–] 24563 17.7	PR 1KS,1KT
			Ate	epad	2358781	[+] 23587 20.3		Luc		2391401	[o] 23914 17.2	PR 1KZ,1KY Ø 286 mm
			Ate		82062900			Luc	epad	2391481	[o] 23914 17.2	PR 1KZ,1KY Ø 286 mm
			Ate		82076800			Bos		82054300		PR 1KS,1KT
				PRO	92120503	ø 312 x 25 x 49.7		Luc		82509000		PR 1KZ,1KY Ø 286 mm
					TPM0008				PRO	92140803	ø 282 x 12 x 48.5	PR 1KZ,1KY
									PRO	92224903	ø 272 x 10 x 48.3	PR 1KS,1KT
										TPM0008		

LEON (5F1) 09/12→

1.2 TSI	12/12→	638700 63 / 86	TRW		2568301	[+] 25683 20.3		Luc		2355402	[–] 23554 17.2	
1.2 TSI	01/13→	77 / 105		PRO	92120803	ø 288 x 25 x 49.8		Luc	epad	2355481	[–] 23554 17.2	
				PRO	92120805	ø 288 x 25 x 49.8			PRO	92120903	ø 255 x 10 x 51.6	

R - S

		kW / hp										
LEON (5F1) 09/12→												
		638700		TPM0008				TPM0008				
1.2 TSI	12/12→	63 / 86										
1.2 TSI	01/13→	77 / 105										
		638800	TRW	2568301	[+] 25683 20.3		Luc	2355402	[–] 23554 17.2			
1.2 TSI	04/14→	81 / 110										
1.4 TSI	05/14→	92 / 125		98050800	L170		Luc	2355481	[–] 23554 17.2			
1.4 TSI	05/14→	110 / 150										
				92120803	ø 288 x 25 x 49.8			92120903	ø 255 x 10 x 51.6			
				92120805	ø 288 x 25 x 49.8			TPM0008				
				TPM0008								
		638900	TRW	2473801	[+] 24738 20	PR 1LJ	Luc	2511001	[–] 25110 17.5	PR 1KS		
1.4 TGI	02/13→	81 / 110										
2.0 Cupra	10/13→	195 / 265	TRW	2568301	[+] 25683 20.3	PR 1ZE,1ZA	Luc	2355402	[–] 23554 17.2	PR 1KD		
2.0 Cupra	10/13→	206 / 280										
				92120503	ø 312 x 25 x 49.7	PR 1ZA	Luc	2355481	[–] 23554 17.2	PR 1KD		
				92120803	ø 288 x 25 x 49.8	PR 1ZE	Luc	2391401	[o] 23914 17.2	PR 1KW		
				92120805	ø 288 x 25 x 49.8	PR 1ZE	Luc	2391481	[o] 23914 17.2	PR 1KW		
				92229803	ø 340 x 30 x 49.7	PR 1LJ	Ate	82503500		PR 1KW		
				TPM0008				92120903	ø 255 x 10 x 51.6	PR 1KD		
								92224903	ø 272 x 10 x 48.3	PR 1KS		
								92140703	ø 310 x 22 x 48.5	PR 1KW		
								TPM0008				
		639000	TRW	2568301	[+] 25683 20.3		Luc	2511001	[–] 25110 17.5	PR 1KS Ø 272 mm		
1.4 TSI	09/12→	103 / 140										
1.4 TSI	11/12→	90 / 122		92120503	ø 312 x 25 x 49.7	PR 1ZA	Luc	2355402	[–] 23554 17.2	PR 1KD Ø 255 mm		
1.6 TDI	11/12→	66 / 90										
1.6 TDI	11/12→	77 / 105		92120803	ø 288 x 25 x 49.8		Luc	2355481	[–] 23554 17.2	PR 1KD Ø 255 mm		
1.6 TDI	09/13→	81 / 110										
1.8 TSI	02/13→	132 / 180		92120805	ø 288 x 25 x 49.8			92120903	ø 255 x 10 x 51.6			
2.0 TDI	09/12→	135 / 184										
2.0 TDI	10/12→	110 / 150		TPM0008				92224903	ø 272 x 10 x 48.3	PR 1KS		
2.0 TDI	05/13→	81 / 110										
2.0 TDI	05/13→	105 / 143						TPM0008				
LEON SC (5F5) 01/13→												
		639100	TRW	2568301	[+] 25683 20.3		Luc	2511001	[–] 25110 17.5	PR 1KS Ø 272 mm		
1.2 TSI	01/13→	63 / 86										
1.2 TSI	02/13→	77 / 105		92120503	ø 312 x 25 x 49.7	PR 1ZA	Luc	2355402	[–] 23554 17.2	PR 1KD Ø 255 mm		
1.4 TSI	02/13→	90 / 122										
1.4 TSI	02/13→	103 / 140		92120803	ø 288 x 25 x 49.8		Luc	2355481	[–] 23554 17.2	PR 1KD Ø 255 mm		
1.6 TDI	02/13→	66 / 90										
1.6 TDI	02/13→	77 / 105		92120805	ø 288 x 25 x 49.8			92120903	ø 255 x 10 x 51.6			
1.6 TDI	09/13→	81 / 110										
1.8 TSI	02/13→	132 / 180		TPM0008				92224903	ø 272 x 10 x 48.3	PR 1KS		
2.0 TDI	02/13→	110 / 150										
2.0 TDI	03/13→	135 / 184						TPM0008				
2.0 TDI	05/13→	105 / 143										
		639200	TRW	2568301	[+] 25683 20.3		Luc	2355402	[–] 23554 17.2			
1.2 TSI	05/14→	81 / 110										
1.4 TSI	05/14→	92 / 125		98050800	L170		Luc	2355481	[–] 23554 17.2			
1.4 TSI	05/14→	110 / 150										
				92120803	ø 288 x 25 x 49.8			92120903	ø 255 x 10 x 51.6			
				92120805	ø 288 x 25 x 49.8			TPM0008				
				TPM0008								
		639300	TRW	2473801	[+] 24738 20	PR 1LJ	Luc	2511001	[–] 25110 17.5	PR 1KS		
2.0 Cupra	10/13→	195 / 265										
2.0 Cupra	10/13→	206 / 280	TRW	2568301	[+] 25683 20.3	PR 1ZE,1ZA	Luc	2355402	[–] 23554 17.2	PR 1KD		
2.0 TDI	02/13→	81 / 110										
				92120503	ø 312 x 25 x 49.7	PR 1ZA	Luc	2355481	[–] 23554 17.2	PR 1KD		
				92120803	ø 288 x 25 x 49.8	PR 1ZE	Luc	2391401	[o] 23914 17.2	PR 1KW		
				92120805	ø 288 x 25 x 49.8	PR 1ZE	Luc	2391481	[o] 23914 17.2	PR 1KW		
				92229803	ø 340 x 30 x 49.7	PR 1LJ	Ate	82503500		PR 1KW		

		kW / hp											
LEON SC (5F5) 01/13→													
639300				**TPM0008**					**92120903**	ø 255 x 10 x 51.6	PR 1KD		
2.0 Cupra	10/13→	195 / 265							**92224903**	ø 272 x 10 x 48.3	PR 1KS		
2.0 Cupra	10/13→	206 / 280							**92140703**	ø 310 x 22 x 48.5	PR 1KW		
2.0 TDI	02/13→	81 / 110							**TPM0008**				
LEON ST (5F8) 08/13→													
639400			TRW	**2473801**	[+] 24738 20	PR 1LJ			Luc	**2511001**	[–] 25110 17.5	PR 1KS	
1.2 TSI	08/13→	77 / 105	TRW	**2568301**	[+] 25683 20.3	PR 1ZE,1ZA			Luc	**2355402**	[–] 23554 17.2	PR 1KD	
1.2 TSI	11/13→	63 / 86		**92120503**	ø 312 x 25 x 49.7	PR 1ZA			Luc	**2355481**	[–] 23554 17.2	PR 1KD	
1.4 TGI	10/13→	81 / 110		**92120803**	ø 288 x 25 x 49.8	PR 1ZE			Luc	**2391401**	[o] 23914 17.2	PR 1KW	
1.4 TSI	10/13→	90 / 122		**92120805**	ø 288 x 25 x 49.8	PR 1ZE			Luc	**2391481**	[o] 23914 17.2	PR 1KW	
1.4 TSI	10/13→	103 / 140		**92229803**	ø 340 x 30 x 49.7	PR 1LJ			Ate	**82503500**		PR 1KW	
1.6 TDI	09/13→	81 / 110		**TPM0008**									
1.6 TDI	10/13→	77 / 105											
1.6 TDI	11/13→	66 / 90											
1.6 TDI 4Drive	04/14→	77 / 105											
1.8 TSI	10/13→	132 / 180											
2.0 TDI	08/13→	135 / 184											
2.0 TDI	10/13→	105 / 143											
2.0 TDI	10/13→	110 / 150											
2.0 TDI	11/13→	81 / 110											
639500			TRW	**2568301**	[+] 25683 20.3				Luc	**2355402**	[–] 23554 17.2		
1.2 TSI	05/14→	81 / 110		**98050800**	L170				Luc	**2355481**	[–] 23554 17.2		
1.4 TSI	05/14→	92 / 125		**92120803**	ø 288 x 25 x 49.8					**92120903**	ø 255 x 10 x 51.6		
1.4 TSI	05/14→	110 / 150		**92120805**	ø 288 x 25 x 49.8					**TPM0008**			
				TPM0008									
639600			TRW	**2568301**	[+] 25683 20.3				Luc	**2511001**	[–] 25110 17.5		
2.0 TDI 4Drive	04/14→	110 / 150		**98050800**	L170					**92224903**	ø 272 x 10 x 48.3		
				92120803	ø 288 x 25 x 49.8					**TPM0008**			
				92120805	ø 288 x 25 x 49.8								
				TPM0008									
Mii (KF1_) 10/11→													
639700			Ate	**2313001**	[–] 23130 19.7					**91044700**	ø 200 x 40		
1.0	10/11→	44 / 60	Ate	**2313081**	[–] 23130 19.7				Ate	**97006500**			
1.0	10/11→	55 / 75		**92239403**	ø 255.9 x 22 x 36.6					**84044706**	bore ø 17.5 ø 200 x 40		
1.0 EcoFuel	11/12→	50 / 68		**TPM0008**						**TPM0008**			
										94022800	ø 200,0 x 50.5		
TOLEDO (1L) 05/91→03/99 → TOLEDO I (1L), Page 1041													
TOLEDO (1L) 05/91→03/99 → TOLEDO I (1L), Page 1041													
TOLEDO I (1L) 05/91→03/99													
639800			Kel	**2088710**	[–] 20887 19.7	→1L-TR002434				**91018200**	ø 180 x 31	→1L-ZD310000	
1.6 i	05/91→03/99	54 / 73	VW	**2186601**	[–] 21866 15.3	1L-W-012701→				**91044700**	ø 200 x 40	1L-ZD310001→	
1.6 i	01/93→03/99	55 / 75	VW	**2186603**	[–] 21866 19.7	1L-TR002435→ →1L-W-012700			Ate	**97000500**		→1L-ZD310000	
1.6 i	11/96→03/99	74 / 101	Kel	**82026700**		→1L-TR002434			Ate	**97006500**		1L-ZD310001→	
			Ate	**82062900**		1L-TR002435→ →1L-W-012700				**84018200**	bore ø 17.5 ø 180 x 31	→1L-ZD310000	
				92010603	ø 239 x 12 x 35	→1L-W-012700				**84018205**	bore ø 17.5 ø 180 x 31	→1L-ZD310000	
				92012103	ø 239 x 20 x 38.7	1L-W-012701→				**84044706**	bore ø 17.5 ø 200 x 40	1L-ZD310001→	

R - S

		kW / hp												
TOLEDO I (1L) 05/91→03/99														
		639800			**TPM0008**						**94006600**	ø 180,0 x 38.5	→1L-ZD310000
1.6 i	05/91→03/99	54 / 73											
1.6 i	01/93→03/99	55 / 75									**94006700**	ø 200,0 x 49.8	1L-ZD310001→
1.6 i	11/96→03/99	74 / 101											
		639900	Luc		**2016801**	[–] 20168 16.2	→1L-TR031348		Luc		**2355401**	[–] 23554 15.2	→1L-ZD328000
1.8 16V	05/91→03/99	92 / 125											
1.8 16V	05/91→03/99	98 / 133	Luc		**2194502**	[–] 21945 16.2	1L-TR031349→		Luc		**2355402**	[–] 23554 17.2	1L-ZD328001→
			Luc		**82037300**				Luc		**2355481**	[–] 23554 17.2	1L-ZD328001→
			Luc		**82062800**				Luc		**2355482**	[–] 23554 15.2	→1L-ZD328000
				PRO	**92036803**	ø 256 x 20 x 38.7			Luc		**82033000**		
					TPM0008				Luc		**82062800**		
										PRO	**92154203**	ø 226 x 10 x 71.5	
										PRO	**92041803**	ø 226 x 10 x 71.5	
		640000	Kel		**2088710**	[–] 20887 19.7	→1L-TR002434				**91044700**	ø 200 x 40	
1.9 D	05/91→03/99	50 / 68											
			VW		**2186601**	[–] 21866 15.3	1L-W-012701→		Ate		**97006500**		
			VW		**2186603**	[–] 21866 19.7	1L-TR002435→ →1L-W-012700				**84044706**	bore ø 17.5 ø 200 x 40	
			Kel		**82026700**		→1L-TR002434 1L-W-012701→				**94006700**	ø 200,0 x 49.8	
			Ate		**82062900**		1L-TR002435→ →1L-W-012700						
				PRO	**92010603**	ø 239 x 12 x 35	→1L-W-012700						
				PRO	**92012103**	ø 239 x 20 x 38.7	1L-W-012701→						
					TPM0008								
		640100	Kel		**2088710**	[–] 20887 19.7	→1L-TR002434				**91044700**	ø 200 x 40	
1.9 D	12/95→03/99	47 / 64											
1.9 TD	05/91→03/99	55 / 75	VW		**2186601**	[–] 21866 15.3	1L-W-012701→		Ate		**97006500**		
			VW		**2186603**	[–] 21866 19.7	1L-TR002435→ →1L-W-012700				**84044706**	bore ø 17.5 ø 200 x 40	
			Kel		**82026700**		→1L-TR002434				**94006700**	ø 200,0 x 49.8	
			Ate		**82062900**		1L-TR002435→ →1L-W-012700						
				PRO	**92010603**	ø 239 x 12 x 35	→1L-W-012700						
				PRO	**92012103**	ø 239 x 20 x 38.7	1L-W-012701→						
					TPM0008								
		640200	Luc		**2016801**	[–] 20168 16.2	1L-TR017000→ →1L-TR031348				**91044700**	ø 200 x 40	
1.9 TDI	08/95→03/99	66 / 90											
1.9 TDI	11/96→03/99	81 / 110	Luc		**2016804**	[–] 20168 19.6	→1L-TR016999		Ate		**97006500**		
			Luc		**2194502**	[–] 21945 16.2	1L-TR031349→				**84044706**	bore ø 17.5 ø 200 x 40	
			Luc		**82037300**						**94006700**	ø 200,0 x 49.8	
			Luc		**82062800**								
				PRO	**92041703**	ø 256 x 13 x 39.2	→1L-TR016999						
				PRO	**92036803**	ø 256 x 20 x 38.7	1L-TR017000→						
					TPM0008								
		640300	Luc		**2016801**	[–] 20168 16.2	→1L-TR031348		Luc		**2355401**	[–] 23554 15.2	⊕ rear disc brake →1L-ZD328000
2.0 i	05/91→03/99	85 / 115											
			Luc		**2194502**	[–] 21945 16.2	1L-TR031349→		Luc		**2355402**	[–] 23554 17.2	1L-ZD328001→
			Luc		**82037300**				Luc		**2355481**	[–] 23554 17.2	1L-ZD328001→
			Luc		**82062800**				Luc		**2355482**	[–] 23554 15.2	⊕ rear disc brake →1L-ZD328000
				PRO	**92036803**	ø 256 x 20 x 38.7			Luc		**82033000**		
					TPM0008				Luc		**82062800**		

		kW / hp										
TOLEDO I (1L) 05/91→03/99												
		640300										
2.0 i	05/91→03/99	85 / 115							PRO	92154203	ø 226 x 10 x 71.5	
									PRO	92041803	ø 226 x 10 x 71.5	
		640400	Luc		2016804	[–] 20168 19.6			Luc	2355402	[–] 23554 17.2	
2.0 i 16V	11/93→03/99	110 / 150	Luc		82037300				Luc	2355481	[–] 23554 17.2	
			Luc		82062800				Luc	82033000		
					92057100	ø 280 x 22 x 28.2			Luc	82062800		
					TPM0008				ABS	92153800	ø 226 x 10 x 71.2	⊕ rim 5 hole
										92057200	ø 226 x 10 x 71.2	⊕ rim 5 hole
TOLEDO II (1M2) 04/99→05/06												
		640500	Ate		2313001	[–] 23130 19.7			Luc	2355402	[–] 23554 17.2	
1.4 16V	07/99→05/06	55 / 75										
1.6	04/99→09/00	74 / 100	Ate		2313081	[–] 23130 19.7			Luc	2355481	[–] 23554 17.2	
1.6	08/05→05/06	75 / 102										
1.6 16V	09/00→05/06	77 / 105										
1.8 20V	04/99→05/06	92 / 125	Ate		2313101	[+] 23131 19.7			Luc	82037300		Ø 232 mm PR 1KK,1KP
1.9 SDI	11/99→06/04	50 / 68										
1.9 TDi	08/05→05/06	74 / 101	Ate		2313181	[+] 23131 19.7			Luc	82502100		Ø 256 mm PR 1KY,2EE
1.9 TDI	04/99→05/06	66 / 90										
1.9 TDI	04/99→05/06	81 / 110										
			Ate		82062900				Luc	82063300		
				PRO	92082203	ø 256 x 22 x 36.5	PR 1LQ		PRO	92082503	ø 232 x 9 x 39.3	PR 1KP,1KK
				PRO	92082303	ø 280 x 22 x 36.5	PR 1LR,1LS		PRO	92098603	ø 256 x 22 x 36.7	PR 1KY,2EE
					TPM0008					TPM0008		
		640600	Ate		2339201	[+] 23392 20.6			Luc	2355402	[–] 23554 17.2	
1.8 20VT	05/01→05/06	132 / 180										
1.9 TDI	10/00→05/06	110 / 150	Ate		82029300				Luc	2355481	[–] 23554 17.2	
1.9 TDI	05/03→05/06	96 / 130										
2.3 V5 20V	05/01→05/06	125 / 170	Ate		82062900				Luc	82037300		Ø 232 mm PR 1KK,1KP
				PRO	92098503	ø 312 x 25 x 34	PR 1LJ,1ZQ		Luc	82502100		Ø 256 mm PR 1KY,2EE
				PRO	92106603	ø 288 x 25 x 34.4	PR 1LE,1LN,1ZE,1ZH		Luc	82063300		
					TPM0008				PRO	92082503	ø 232 x 9 x 39.3	PR 1KP,1KK
									PRO	92098603	ø 256 x 22 x 36.7	PR 1KY,2EE
										TPM0008		
		640700	Ate		2339201	[+] 23392 20.6			Luc	2355402	[–] 23554 17.2	
1.8 All-wheel Drive	05/01→04/04	132 / 179										
1.8 All-wheel Drive	05/02→05/03	154 / 209	Ate		82029300				Luc	2355481	[–] 23554 17.2	
1.8 All-wheel Drive	05/03→10/05	165 / 224										
			Ate		82062900				Luc	82502100		
				PRO	92098503	ø 312 x 25 x 34	PR 1LJ,1ZQ		Luc	82063300		
				PRO	92106603	ø 288 x 25 x 34.4	PR 1LE,1LN,1ZE,1ZH		PRO	92098603	ø 256 x 22 x 36.7	
					TPM0008					TPM0008		
		640800	Ate		2191102	[–] 21911 20.6			Luc	2355402	[–] 23554 17.2	
2.3 V5	04/99→05/01	110 / 150										
			Ate		2339201	[+] 23392 20.6			Luc	2355481	[–] 23554 17.2	
			Ate		82029300				Luc	82037300		Ø 232 mm PR 1KK,1KP
			Ate		82062900				Luc	82502100		Ø 256 mm PR 1KY,2EE
				PRO	92098503	ø 312 x 25 x 34	PR 1LJ,1ZQ		Luc	82063300		
				PRO	92106603	ø 288 x 25 x 34.4	PR 1LE,1LN,1ZE,1ZH		PRO	92082503	ø 232 x 9 x 39.3	PR 1KP,1KK
					TPM0008				PRO	92098603	ø 256 x 22 x 36.7	PR 1KY,2EE
										TPM0008		
		640900	Ate		2339201	[+] 23392 20.6			Luc	2355402	[–] 23554 17.2	
2.8	10/00→07/01	150 / 204										

		kW / hp										
TOLEDO II (1M2) 04/99→05/06												
640900			Ate		82029300			Luc		2355481	[–] 23554 17.2	
2.8	10/00→07/01	150 / 204	Ate		82062900			Luc		82037300		Ø 232 mm PR 1KK,1KP
				PRO	92106603	ø 288 x 25 x 34.4		Luc		82502100		Ø 256 mm PR 1KY,2EE
					TPM0008			Luc		82063300		
									PRO	92082503	ø 232 x 9 x 39.3	PR 1KP,1KK
									PRO	92098603	ø 256 x 22 x 36.7	PR 1KY,2EE
										TPM0008		
641000			Ate		2339201	[+] 23392 20.6		Luc		2355402	[–] 23554 17.2	
2.8 4x4	05/02→04/04	150 / 204	Ate		82029300			Luc		2355481	[–] 23554 17.2	
			Ate		82062900			Luc		82502100		
				PRO	92098503	ø 312 x 25 x 34		Luc		82063300		
					TPM0008				PRO	92098603	ø 256 x 22 x 36.7	
										TPM0008		
TOLEDO II Saloon (1M2) 04/99→05/06 → TOLEDO II (1M2), Page 1043												
TOLEDO II Stufenheck (1M2) 04/99→05/06 → TOLEDO II (1M2), Page 1043												
TOLEDO III (5P2) 04/04→05/09												
641100			Ate		2313101	[+] 23131 19.7	PR 1ZF	Luc		2355402	[–] 23554 17.2	PR 1KD
1.4 16V	05/06→05/09	63 / 86	Ate	epad	2313181	[+] 23131 19.7	PR 1ZF	Luc	epad	2355481	[–] 23554 17.2	PR 1KD
			Ate		2358701	[+] 23587 20.3	PR 1ZE	Luc		2391401	[o] 23914 17.2	PR 1KZ,1KJ,1KF
			Ate	epad	2358781	[+] 23587 20.3	PR 1ZE	Luc	epad	2391481	[o] 23914 17.2	PR 1KZ,1KJ,1KF
			Ate		82076800		PR 1ZE	Luc		82509000		PR 1KZ,1KJ,1KF
				PRO	92120703	ø 280 x 22 x 49.9	PR 1ZF		PRO	92120903	ø 255 x 10 x 51.6	PR 1KD
				PRO	92120705	ø 280 x 22 x 49.9	PR 1ZF		PRO	92121103	ø 256 x 12 x 48.4	PR 1KF
				PRO	92120803	ø 288 x 25 x 49.8	PR 1ZE		PRO	92140803	ø 282 x 12 x 48.5	PR 1KJ,1KZ
				PRO	92120805	ø 288 x 25 x 49.8	PR 1ZE			TPM0008		
					TPM0008							
641200			Ate		2313101	[+] 23131 19.7		Luc		2355402	[–] 23554 17.2	
1.6	10/04→05/09	75 / 102	Ate	epad	2313181	[+] 23131 19.7		Luc	epad	2355481	[–] 23554 17.2	
			Ate		82062900			Luc		82037300		
				PRO	92120703	ø 280 x 22 x 49.9		Luc		82063300		
				PRO	92120705	ø 280 x 22 x 49.9			PRO	92120903	ø 255 x 10 x 51.6	
					TPM0008				PRO	92121103	ø 256 x 12 x 48.4	
									PRO	92140803	ø 282 x 12 x 48.5	
										TPM0008		
641300			Ate		2358701	[+] 23587 20.3		Luc		2355402	[–] 23554 17.2	
1.8 TFSI	01/07→05/09	118 / 160										
1.9 TDI	10/04→05/09	77 / 105										
2.0 FSI	10/04→05/09	110 / 150	Ate	epad	2358781	[+] 23587 20.3		Luc	epad	2355481	[–] 23554 17.2	
2.0 TDI	09/04→05/09	100 / 136										
2.0 TDI	11/05→05/09	103 / 140	Ate		82062900			Luc		82037300		
2.0 TDI	01/06→05/09	125 / 170										
2.0 TDI 16V	04/04→05/09	103 / 140	Ate		82076800			Luc		82063300		
				PRO	92120803	ø 288 x 25 x 49.8			PRO	92120903	ø 255 x 10 x 51.6	
				PRO	92120805	ø 288 x 25 x 49.8			PRO	92121103	ø 256 x 12 x 48.4	
					TPM0008				PRO	92140803	ø 282 x 12 x 48.5	

TOLEDO III (5P2) 04/04→05/09

641300													
1.8 TFSI	01/07→05/09	118 / 160								TPM0008			
1.9 TDI	10/04→05/09	77 / 105											
2.0 FSI	10/04→05/09	110 / 150											
2.0 TDI	09/04→05/09	100 / 136											
2.0 TDI	11/05→05/09	103 / 140											
2.0 TDI	01/06→05/09	125 / 170											
2.0 TDI 16V	04/04→05/09	103 / 140											
641400			Ate		2358701	[+] 23587	20.3		Luc		2355402	[–] 23554	17.2
2.0 TFSI	11/05→05/09	147 / 200	Ate	epad	2358781	[+] 23587	20.3		Luc	epad	2355481	[–] 23554	17.2
			Ate		82062900				Luc		82063300		
			Ate		82076800					PRO	92140803	ø 282 x 12 x 48.5	
				PRO	92120803	ø 288 x 25 x 49.8					TPM0008		
				PRO	92120805	ø 288 x 25 x 49.8							
					TPM0008								

TOLEDO IV (KG3) 07/12→

641500			Ate		2313001	[–] 23130	19.7		Luc		2355402	[–] 23554	17.2
1.2	07/12→	55 / 75											
1.2 TSI	07/12→	63 / 86	Ate	epad	2313081	[–] 23130	19.7		Luc	epad	2355481	[–] 23554	17.2
			Ate		82062900				Luc		82037300		
				PRO	92082203	ø 256 x 22 x 36.5				PRO	92082503	ø 232 x 9 x 39.3	
					TPM0008						TPM0008		
641600			Ate		2358701	[+] 23587	20.3		Luc		2355402	[–] 23554	17.2
1.2 TSI	07/12→	77 / 105											
1.4 TSI	07/12→	90 / 122	Ate	epad	2358781	[+] 23587	20.3		Luc	epad	2355481	[–] 23554	17.2
1.6	07/13→	77 / 105											
1.6 TDI	07/12→	77 / 105	Ate		82062900				Luc		82037300		
			Ate		82076800					PRO	92082503	ø 232 x 9 x 39.3	
				PRO	92106603	ø 288 x 25 x 34.4					TPM0008		
					TPM0008								
641700			Ate		2313001	[–] 23130	19.7	14" -brake	Luc		2355402	[–] 23554	17.2 ⊕ rear disc brake
1.6 TDI	06/13→	66 / 90	Ate	epad	2313081	[–] 23130	19.7	14" -brake	Luc	epad	2355481	[–] 23554	17.2 ⊕ rear disc brake
			Ate		2358701	[+] 23587	20.3	15" -brake			91080100	ø 228.4 x 32.5	⊕ rear drum brake
			Ate	epad	2358781	[+] 23587	20.3	15" -brake		PRO	92082503	ø 232 x 9 x 39.3	⊕ rear disc brake
			Ate		82076800			15" -brake			TPM0008		
				PRO	92082203	ø 256 x 22 x 36.5		14" -brake					
				PRO	92106603	ø 288 x 25 x 34.4		15" -brake					
					TPM0008								

TOLEDO Mk II (1M2) 04/99→05/06 → TOLEDO II (1M2), Page 1043

CITIGO 10/11→

641800			Ate		2313001	[–] 23130	19.7				91044700	ø 200 x 40	
1.0	10/11→	44 / 60											
1.0	10/11→	55 / 75	Ate	epad	2313081	[–] 23130	19.7		Ate		97006500		
				PRO	92239403	ø 255.9 x 22 x 36.6					84044706	bore ø 17.5 ø 200 x 40	
					TPM0008						TPM0008		
											94022800	ø 200,0 x 50.5	
641900			Ate		2313001	[–] 23130	19.7	PR 1LA			91044700	ø 200 x 40	
1.0 CNG	11/12→	50 / 68											

		kW / hp											
CITIGO 10/11→													
		641900	Ate		**2313081**	[–] 23130 19.7	PR 1LA			**94022800**	ø 200,0 x 50.5	
1.0 CNG	11/12→	50 / 68	Ate		**2313101**	[+] 23131 19.7	PR 1ZQ					
			Ate		**2313181**	[+] 23131 19.7	PR 1ZQ					
				PRO	**92239403**	ø 255.9 x 22 x 36.6						
FABIA (6Y2) 08/99→03/08													
		642000	VW		**2186602**	[–] 21866 17.2				**91044700**	ø 200 x 40	
1.0	12/99→08/02	37 / 50	VW		**2186801**	[+] 21868 17.2		Ate		**97006500**		
			Ate		**82062900**					**94023800**	ø 200,0 x 50.5	
				PRO	**92106803**	ø 239 x 18 x 34.9						
					TPM0008							
		642100	Ate		**2313001**	[–] 23130 19.7	PR 1LQ,1LR.9U0 Ø 256 mm	Luc		**2355402**	[–] 23554 17.2	⊕ rear disc brake
1.2	08/02→03/08	40 / 54	Ate		**2313081**	[–] 23130 19.7	PR 1LQ,1LR.9U0 Ø 256 mm	Luc		**2355481**	[–] 23554 17.2	⊕ rear disc brake
			VW		**2186602**	[–] 21866 17.2	PR 1LM,9U0,1LB Ø 239 mm			**91044700**	ø 200 x 40	⊕ rear drum brake
			VW		**2186801**	[+] 21868 17.2	PR 1LM,9U1 Ø 239 mm	Ate		**97006500**		⊕ rear drum brake
			Ate		**2313101**	[+] 23131 19.7	PR 1LQ,9U1 Ø 256 mm		PRO	**92082503**	ø 232 x 9 x 39.3	⊕ rear disc brake
			Ate		**2313181**	[+] 23131 19.7	PR 1LQ,9U1 Ø 256 mm			**TPM0008**		
			Ate		**82062900**					**94023800**	ø 200,0 x 50.5	⊕ rear drum brake
				PRO	**92082203**	ø 256 x 22 x 36.5	PR 1LQ,1LR					
				PRO	**92106803**	ø 239 x 18 x 34.9	PR 1LM,1LB					
					TPM0008							
		642200	Ate		**2313001**	[–] 23130 19.7	PR 1LQ,1LR.9U0 Ø 256 mm	Luc		**2355402**	[–] 23554 17.2	⊕ rear disc brake
1.2	01/03→03/08	47 / 64	Ate		**2313081**	[–] 23130 19.7	PR 1LQ,1LR.9U0 Ø 256 mm	Luc		**2355481**	[–] 23554 17.2	⊕ rear disc brake
			VW		**2186602**	[–] 21866 17.2	PR 1LM,9U0 Ø 239 mm			**91044700**	ø 200 x 40	⊕ rear drum brake
			VW		**2186801**	[+] 21868 17.2	PR 1LM,9U1 Ø 239 mm	Ate		**97006500**		⊕ rear drum brake
			Ate		**2313101**	[+] 23131 19.7	PR 1LQ,9U1 Ø 256 mm		PRO	**92082503**	ø 232 x 9 x 39.3	⊕ rear disc brake
			Ate		**2313181**	[+] 23131 19.7	PR 1LQ,9U1 Ø 256 mm			**TPM0008**		
			Ate		**82062900**					**94023800**	ø 200,0 x 50.5	⊕ rear drum brake
				PRO	**92082203**	ø 256 x 22 x 36.5	PR 1LQ,1LR					
				PRO	**92106803**	ø 239 x 18 x 34.9	PR 1LM					
					TPM0008							
		642300	Ate		**2313001**	[–] 23130 19.7		Luc		**2355402**	[–] 23554 17.2	⊕ rear disc brake
1.4	08/99→05/03	50 / 68										
1.4	08/00→08/02	44 / 60	Ate		**2313081**	[–] 23130 19.7		Luc		**2355481**	[–] 23554 17.2	⊕ rear disc brake
1.4	02/06→10/06	59 / 80										
1.4 16V	12/99→03/08	55 / 75										
1.4 TDI	04/03→03/08	55 / 75	Ate		**2313101**	[+] 23131 19.7				**91044700**	ø 200 x 40	⊕ rear drum brake
1.4 TDI	10/05→03/08	51 / 70										
1.4 TDI	10/05→03/08	59 / 80										
1.9 SDI	12/99→03/08	47 / 64	Ate		**2313181**	[+] 23131 19.7		Ate		**97006500**		⊕ rear drum brake
			Ate		**82062900**				PRO	**92082503**	ø 232 x 9 x 39.3	⊕ rear disc brake
				PRO	**92082203**	ø 256 x 22 x 36.5				**TPM0008**		
					TPM0008					**94023800**	ø 200,0 x 50.5	⊕ rear drum brake
		642400	Ate		**2313001**	[–] 23130 19.7		Luc		**2355402**	[–] 23554 17.2	
1.4 16V	12/99→03/08	74 / 100										
1.9 TDI	01/00→03/08	74 / 100	Ate		**2313081**	[–] 23130 19.7		Luc		**2355481**	[–] 23554 17.2	
2.0	12/99→03/08	85 / 116										
			Ate		**2313101**	[+] 23131 19.7			PRO	**92082503**	ø 232 x 9 x 39.3	

kW / hp

FABIA (6Y2) 08/99→03/08

642400			Ate		2313181	[+] 23131 19.7				TPM0008			
1.4 16V	12/99→03/08	74 / 100		epad									
1.9 TDI	01/00→03/08	74 / 100	Ate		82062900								
2.0	12/99→03/08	85 / 116		PRO	92082203	ø 256 x 22 x 36.5							
					TPM0008								
642500			Luc		2358101	[–] 23581 19		Luc		2355402	[–] 23554 17.2		
1.9 TDI RS	06/03→03/08	96 / 130	Luc		82055400			Luc	epad	2355481	[–] 23554 17.2		
			Luc		82063500				PRO	92082503	ø 232 x 9 x 39.3		
				PRO	92106603	ø 288 x 25 x 34.4				TPM0008			
					TPM0008								

FABIA 12/06→

642600			Ate		2313001	[–] 23130 19.7	PR 1LQ+9U0,1LR+9U0 PR 1ZG Ø 256 mm			91044700	ø 200 x 40		
1.2	12/06→	44 / 60	Ate	epad	2313081	[–] 23130 19.7	PR 1LQ+9U0,1LR+9U0 PR 1ZG Ø 256 mm	Ate		97006500			
			VW		2186602	[–] 21866 17.2	PR 1LB+9U0,1LM+9U0 Ø 239 mm			84044703	bore ø 19 ø 200 x 40	→09/09	
			VW		2186801	[+] 21868 17.2	PR 1LB+9U1,1LM+9U1 Ø 239 mm			94023800	ø 200,0 x 50.5		
			Ate		2313101	[+] 23131 19.7	PR 1LQ+9U1,1LR+9U1 Ø 256 mm						
			Ate	epad	2313181	[+] 23131 19.7	PR 1LQ+9U1,1LR+9U1 Ø 256 mm						
			Ate		82062900		Teves						
				PRO	92082203	ø 256 x 22 x 36.5	PR 1LQ,1LR,1ZG						
				PRO	92106803	ø 239 x 18 x 34.9	PR 1LB,1LM						
					TPM0008								
642700			Ate		2313001	[–] 23130 19.7				91044700	ø 200 x 40		
1.2	01/07→	51 / 70	Ate	epad	2313081	[–] 23130 19.7		Ate		97006500			
			Ate		2313101	[+] 23131 19.7				84044703	bore ø 19 ø 200 x 40	→09/09	
			Ate	epad	2313181	[+] 23131 19.7				94023800	ø 200,0 x 50.5		
			Ate		82062900								
				PRO	92082203	ø 256 x 22 x 36.5							
					TPM0008								
642800			Ate		2313001	[–] 23130 19.7	⊖ IND-made ⊕ IND-made →2011-08-06			91044700	ø 200 x 40		
1.2 12V	11/11→	44 / 60											
1.2 12V	11/11→	55 / 75	Ate	epad	2313081	[–] 23130 19.7	⊖ IND-made ⊕ IND-made →2011-08-06	Ate		97006500			
			TRW		2568101	[–] 25681 18	⊕ IND 2011-08-07→			94023800	ø 200,0 x 50.5		
			Ate		82062900								
				PRO	92082203	ø 256 x 22 x 36.5							
					TPM0008								
642900			Ate		2313001	[–] 23130 19.7		Luc		2355402	[–] 23554 17.2		
1.2 TDI	05/10→	55 / 75											
1.2 TSI	03/10→	63 / 86	Ate	epad	2313081	[–] 23130 19.7		Luc	epad	2355481	[–] 23554 17.2		
1.6 TDI	03/10→	66 / 90											
1.6 TDI	04/10→	55 / 75	Ate		82062900			Luc		82037300			
				PRO	92082203	ø 256 x 22 x 36.5		Luc		82063300			
					TPM0008					91044700	ø 200 x 40		
								Ate		97006500			
									PRO	92082503	ø 232 x 9 x 39.3		

R-S

30 kW / hp

FABIA 12/06→

		642900									TPM0008		
1.2 TDI	05/10→	55 / 75											
1.2 TSI	03/10→	63 / 86									94023800	ø 200,0 x 50.5	
1.6 TDI	03/10→	66 / 90											
1.6 TDI	04/10→	55 / 75											
		643000	Ate		2358701	[+] 23587 20.3			Luc		2355402	[–] 23554 17.2	
1.2 TSI	03/10→	77 / 105											
1.6 TDI	03/10→	77 / 105	Ate	epad	2358781	[+] 23587 20.3			Luc	epad	2355481	[–] 23554 17.2	
			Ate		82062900				Luc		82037300		
			Ate		82076800				Luc		82063300		
				PRO	92106603	ø 288 x 25 x 34.4					91044700	ø 200 x 40	
					TPM0008				Ate		97006500		
										PRO	92082503	ø 232 x 9 x 39.3	
											TPM0008		
											94023800	ø 200,0 x 50.5	
		643100	Ate		2313001	[–] 23130 19.7			Luc		2355402	[–] 23554 17.2	
1.4	01/07→	63 / 86											
1.4 TDI	01/07→	59 / 80	Ate	epad	2313081	[–] 23130 19.7			Luc	epad	2355481	[–] 23554 17.2	
1.4 TDI	02/07→	51 / 70	Ate		2313101	[+] 23131 19.7			Luc		82037300		
			Ate	epad	2313181	[+] 23131 19.7			Luc		82063300		
			Ate		82062900						91044700	ø 200 x 40	
				PRO	92082203	ø 256 x 22 x 36.5			Ate		97006500		
					TPM0008						84044703	bore ø 19 ø 200 x 40	→09/09
										PRO	92082503	ø 232 x 9 x 39.3	
											TPM0008		
											94023800	ø 200,0 x 50.5	
		643200	Ate		2358701	[+] 23587 20.3			Luc		2355402	[–] 23554 17.2	
1.4 TSI RS	05/10→	132 / 180											
			Ate	epad	2358781	[+] 23587 20.3			Luc	epad	2355481	[–] 23554 17.2	
			Ate		82062900				Luc		82037300		
			Ate		82076800				Luc		82063300		
				PRO	92106603	ø 288 x 25 x 34.4				PRO	92082503	ø 232 x 9 x 39.3	
					TPM0008						TPM0008		
		643300	Ate		2313001	[–] 23130 19.7			Luc		2355402	[–] 23554 17.2	
1.6	04/07→	77 / 105											
			Ate	epad	2313081	[–] 23130 19.7			Luc	epad	2355481	[–] 23554 17.2	
			Ate		2313101	[+] 23131 19.7			Luc		82037300		
			Ate	epad	2313181	[+] 23131 19.7			Luc		82063300		
			Luc		82055400						91044700	ø 200 x 40	
			Ate		82062900				Ate		97006500		
				PRO	92082203	ø 256 x 22 x 36.5					84044703	bore ø 19 ø 200 x 40	→09/09
					TPM0008					PRO	92082503	ø 232 x 9 x 39.3	
											TPM0008		
											94023800	ø 200,0 x 50.5	
		643400	Luc		2358101	[–] 23581 19			Luc		2355402	[–] 23554 17.2	
1.9 TDI	04/07→	77 / 105	Luc		2358102	[+] 23581 19			Luc	epad	2355481	[–] 23554 17.2	
			Luc		82055400		PR 1LN		Luc		82037300		

R - S

		kW / hp											
FABIA 12/06→													
		643400	Luc		82063500			Luc		82063300			
1.9 TDI	04/07→	77 / 105		PRO	92106603	ø 288 x 25 x 34.4				91044700	ø 200 x 40		
					TPM0008			Ate		97006500			
										84044703	bore ø 19 ø 200 x 40	→09/09	
									PRO	92082503	ø 232 x 9 x 39.3		
										TPM0008			
										94023800	ø 200,0 x 50.5		
FABIA Combi (6Y5) 04/00→12/07													
		643500	VW		2186602	[–] 21866 17.2				91044700	ø 200 x 40		
1.0	11/00→08/02	37 / 50	VW		2186801	[+] 21868 17.2		Ate		97006500			
			Ate		82062900					84044703	bore ø 19 ø 200 x 40		
				PRO	92106803	ø 239 x 18 x 34.9				94023800	ø 200,0 x 50.5		
					TPM0008								
		643600	Ate		2313001	[–] 23130 19.7	PR 1LQ,1LR.9U0 Ø 256 mm	Luc		2355402	[–] 23554 17.2	⊕ rear disc brake	
1.2	07/01→12/07	40 / 54											
1.2	01/03→12/07	47 / 64	Ate	epad	2313081	[–] 23130 19.7	PR 1LQ,1LR.9U0 Ø 256 mm	Luc	epad	2355481	[–] 23554 17.2	⊕ rear disc brake	
			VW		2186602	[–] 21866 17.2	PR 1LM,9U0 Ø 239 mm	Luc		82037300		⊕ rear disc brake	
			VW		2186801	[+] 21868 17.2	PR 1LM,9U1 Ø 239 mm	Luc		82063300		⊕ rear disc brake	
			Ate		2313101	[+] 23131 19.7	PR 1LQ,9U1 Ø 256 mm			91044700	ø 200 x 40	⊕ rear drum brake	
			Ate	epad	2313181	[+] 23131 19.7	PR 1LQ,9U1 Ø 256 mm	Ate		97006500		⊕ rear drum brake	
			Ate		82062900					84044703	bore ø 19 ø 200 x 40	⊕ rear drum brake	
				PRO	92082203	ø 256 x 22 x 36.5	PR 1LQ,1LR		PRO	92082503	ø 232 x 9 x 39.3	⊕ rear disc brake	
				PRO	92106803	ø 239 x 18 x 34.9	PR 1LM			TPM0008			
					TPM0008					94023800	ø 200,0 x 50.5	⊕ rear drum brake	
		643700	Ate		2313001	[–] 23130 19.7		Luc		2355402	[–] 23554 17.2	⊕ rear disc brake	
1.4	04/00→03/03	44 / 60											
1.4	04/00→05/03	50 / 68	Ate	epad	2313081	[–] 23130 19.7		Luc	epad	2355481	[–] 23554 17.2	⊕ rear disc brake	
1.4 16V	05/00→12/07	55 / 75											
1.4 16V	04/06→12/07	59 / 80											
1.4 TDI	04/03→12/07	55 / 75	Ate		2313101	[+] 23131 19.7		Luc		82037300		⊕ rear disc brake	
1.4 TDI	10/05→12/07	51 / 70											
1.4 TDI	10/05→12/07	59 / 80											
1.9 SDI	04/00→12/07	47 / 64	Ate	epad	2313181	[+] 23131 19.7		Luc		82063300		⊕ rear disc brake	
			Ate		82062900					91044700	ø 200 x 40	⊕ rear drum brake	
				PRO	92082203	ø 256 x 22 x 36.5		Ate		97006500		⊕ rear drum brake	
					TPM0008					84044703	bore ø 19 ø 200 x 40	⊕ rear drum brake	
									PRO	92082503	ø 232 x 9 x 39.3	⊕ rear disc brake	
										TPM0008			
										94023800	ø 200,0 x 50.5	⊕ rear drum brake	
		643800	Ate		2313001	[–] 23130 19.7		Luc		2355402	[–] 23554 17.2		
1.4 16V	04/00→12/07	74 / 100											
1.9 TDI	04/00→12/07	74 / 100	Ate	epad	2313081	[–] 23130 19.7		Luc	epad	2355481	[–] 23554 17.2		
2.0	04/00→12/07	85 / 116											
			Ate		2313101	[+] 23131 19.7		Luc		82037300			
			Ate	epad	2313181	[+] 23131 19.7		Luc		82063300			
			Ate		82062900				PRO	92082503	ø 232 x 9 x 39.3		
				PRO	92082203	ø 256 x 22 x 36.5				TPM0008			
					TPM0008								

R - S

kW / hp

FABIA Combi 10/07→

643900													
1.2	10/07→	44 / 60	Ate		2313001	[–] 23130 19.7	PR 1LQ+9U0,1LR+9U0 PR 1ZG Ø 256 mm			91044700	ø 200 x 40	
			Ate	epad	2313081	[–] 23130 19.7	PR 1LQ+9U0,1LR+9U0 PR 1ZG Ø 256 mm	Ate		97006500		
			VW		2186602	[–] 21866 17.2	PR 1LB+9U0,1LM+9U0 Ø 239 mm			84044703	bore ø 19 ø 200 x 40	→09/09
			VW		2186801	[+] 21868 17.2	PR 1LB+9U1,1LM+9U1 Ø 239 mm			94023800	ø 200,0 x 50.5	
			Ate		2313101	[+] 23131 19.7	PR 1LQ+9U1,1LR+9U1 Ø 256 mm					
			Ate	epad	2313181	[+] 23131 19.7	PR 1LQ+9U1,1LR+9U1 Ø 256 mm					
			Ate		82062900		Teves					
				PRO	92082203	ø 256 x 22 x 36.5	PR 1LQ,1LR,1ZG					
				PRO	92106803	ø 239 x 18 x 34.9	PR 1LB,1LM					
					TPM0008							
644000													
1.2	10/07→	51 / 70	Ate		2313001	[–] 23130 19.7				91044700	ø 200 x 40	
			Ate	epad	2313081	[–] 23130 19.7		Ate		97006500		
			Ate		2313101	[+] 23131 19.7				84044703	bore ø 19 ø 200 x 40	→09/09
			Ate	epad	2313181	[+] 23131 19.7				94023800	ø 200,0 x 50.5	
			Ate		82062900							
				PRO	92082203	ø 256 x 22 x 36.5						
					TPM0008							
644100													
1.2 12V	11/11→	44 / 60	Ate		2313001	[–] 23130 19.7	⊖ IND-made ⊕ IND-made →2011-08-06			91044700	ø 200 x 40	
			Ate	epad	2313081	[–] 23130 19.7	⊖ IND-made ⊕ IND-made →2011-08-06	Ate		97006500		
			TRW		2568101	[–] 25681 18	⊕ IND 2011-08-07→			94023800	ø 200,0 x 50.5	
			Ate		82062900							
				PRO	92082203	ø 256 x 22 x 36.5						
					TPM0008							
644200													
1.2 TDI	05/10→	55 / 75	Ate		2313001	[–] 23130 19.7		Luc		2355402	[–] 23554 17.2	
1.2 TSI	03/10→	63 / 86										
1.6 TDI	03/10→	66 / 90	Ate	epad	2313081	[–] 23130 19.7		Luc	epad	2355481	[–] 23554 17.2	
1.6 TDI	04/10→	55 / 75	Ate		82062900			Luc		82037300		
				PRO	92082203	ø 256 x 22 x 36.5		Luc		82063300		
					TPM0008					91044700	ø 200 x 40	
								Ate		97006500		
									PRO	92082503	ø 232 x 9 x 39.3	
										TPM0008		
										94023800	ø 200,0 x 50.5	
644300													
1.2 TSI	03/10→	77 / 105	Ate		2358701	[+] 23587 20.3		Luc		2355402	[–] 23554 17.2	
1.6 TDI	03/10→	77 / 105	Ate	epad	2358781	[+] 23587 20.3		Luc	epad	2355481	[–] 23554 17.2	
			Ate		82062900			Luc		82037300		
			Ate		82076800			Luc		82063300		
				PRO	92106603	ø 288 x 25 x 34.4				91044700	ø 200 x 40	
					TPM0008			Ate		97006500		
									PRO	92082503	ø 232 x 9 x 39.3	
										TPM0008		

R-S

		kW / hp											
FABIA Combi 10/07→													
		644300											
1.2 TSI	03/10→	77 / 105								94023800	ø 200,0 x 50.5		
1.6 TDI	03/10→	77 / 105											
		644400	Ate		2313001	[–] 23130 19.7		Luc		2355402	[–] 23554 17.2		
1.4	10/07→	63 / 86	Ate	epad	2313081	[–] 23130 19.7		Luc	epad	2355481	[–] 23554 17.2		
			Ate		2313101	[+] 23131 19.7		Luc		82037300			
			Ate	epad	2313181	[+] 23131 19.7		Luc		82063300			
			Luc		82055400					91044700	ø 200 x 40		
			Ate		82062900			Ate		97006500			
				PRO	92082203	ø 256 x 22 x 36.5				84044703	bore ø 19 ø 200 x 40	→09/09	
					TPM0008				PRO	92082503	ø 232 x 9 x 39.3		
										TPM0008			
										94023800	ø 200,0 x 50.5		
		644500	Ate		2313001	[–] 23130 19.7		Luc		2355402	[–] 23554 17.2		
1.4 TDI	10/07→	51 / 70											
1.4 TDI	10/07→	59 / 80	Ate	epad	2313081	[–] 23130 19.7		Luc	epad	2355481	[–] 23554 17.2		
1.6	10/07→	77 / 105	Ate		2313101	[+] 23131 19.7		Luc		82037300			
			Ate	epad	2313181	[+] 23131 19.7		Luc		82063300			
			Ate		82062900					91044700	ø 200 x 40		
				PRO	92082203	ø 256 x 22 x 36.5		Ate		97006500			
					TPM0008					84044703	bore ø 19 ø 200 x 40	→09/09	
									PRO	92082503	ø 232 x 9 x 39.3		
										TPM0008			
										94023800	ø 200,0 x 50.5		
		644600	Ate		2358701	[+] 23587 20.3		Luc		2355402	[–] 23554 17.2		
1.4 TSI RS	05/10→	132 / 180	Ate	epad	2358781	[+] 23587 20.3		Luc	epad	2355481	[–] 23554 17.2		
			Ate		82062900			Luc		82037300			
			Ate		82076800			Luc		82063300			
				PRO	92106603	ø 288 x 25 x 34.4			PRO	92082503	ø 232 x 9 x 39.3		
					TPM0008					TPM0008			
		644700	Luc		2358101	[–] 23581 19		Luc		2355402	[–] 23554 17.2		
1.9 TDI	10/07→	77 / 105	Luc		2358102	[+] 23581 19		Luc	epad	2355481	[–] 23554 17.2		
			Luc		82055400			Luc		82037300			
			Luc		82063500			Luc		82063300			
				PRO	92106603	ø 288 x 25 x 34.4				91044700	ø 200 x 40		
					TPM0008			Ate		97006500			
										84044703	bore ø 19 ø 200 x 40	→09/09	
									PRO	92082503	ø 232 x 9 x 39.3		
										TPM0008			
										94023800	ø 200,0 x 50.5		
FABIA Praktik 07/01→12/07													
		644800	Ate		2313001	[–] 23130 19.7	PR 1LQ,1LR.9U0 Ø 256 mm	Luc		2355402	[–] 23554 17.2	⊕ rear disc brake	
1.2	07/01→12/07	40 / 54											
1.2	01/03→12/07	47 / 64	Ate	epad	2313081	[–] 23130 19.7	PR 1LQ,1LR.9U0 Ø 256 mm	Luc	epad	2355481	[–] 23554 17.2	⊕ rear disc brake	

30 kW / hp

FABIA Praktik 07/01→12/07

		644800	VW		2186602	[–] 21866 17.2	PR 1LM,9U0 Ø 239 mm	Luc		82037300			⊕ rear disc brake
1.2	07/01→12/07	40 / 54												
1.2	01/03→12/07	47 / 64	VW		2186801	[+] 21868 17.2	PR 1LM,9U1 Ø 239 mm	Luc		82063300			⊕ rear disc brake
			Ate		2313101	[+] 23131 19.7	PR 1LQ,9U1 Ø 256 mm			91044700	ø 200 x 40		⊕ rear drum brake
			Ate	epad	2313181	[+] 23131 19.7	PR 1LQ,9U1 Ø 256 mm	Ate		97006500			⊕ rear drum brake
			Ate		82062900					84044703	bore ø 19 ø 200 x 40		⊕ rear drum brake
				PRO	92082203	ø 256 x 22 x 36.5	PR 1LQ,1LR		PRO	92082503	ø 232 x 9 x 39.3		⊕ rear disc brake
				PRO	92106803	ø 239 x 18 x 34.9	PR 1LM			TPM0008			
					TPM0008					94023800	ø 200,0 x 50.5		⊕ rear drum brake
		644900	Ate		2313001	[–] 23130 19.7		Luc		2355402	[–] 23554 17.2		⊕ rear disc brake
1.4	07/01→05/03	50 / 68												
1.4 TDI	10/05→12/07	51 / 70	Ate	epad	2313081	[–] 23130 19.7		Luc	epad	2355481	[–] 23554 17.2		⊕ rear disc brake
1.9 SDI	07/01→12/07	47 / 64												
			Ate		2313101	[+] 23131 19.7		Luc		82037300			⊕ rear disc brake
			Ate	epad	2313181	[+] 23131 19.7		Luc		82063300			⊕ rear disc brake
			Ate		82062900					91044700	ø 200 x 40		⊕ rear drum brake
				PRO	92082203	ø 256 x 22 x 36.5		Ate		97006500			⊕ rear drum brake
					TPM0008					84044703	bore ø 19 ø 200 x 40		⊕ rear drum brake
									PRO	92082503	ø 232 x 9 x 39.3		⊕ rear disc brake
										TPM0008			
										94023800	ø 200,0 x 50.5		⊕ rear drum brake

FABIA Saloon (6Y3) 10/99→12/07

		645000	VW		2186602	[–] 21866 17.2				91044700	ø 200 x 40		
1.0	11/00→08/02	37 / 50	VW		2186801	[+] 21868 17.2		Ate		97006500			
			Ate		82062900					84044703	bore ø 19 ø 200 x 40		
				PRO	92106803	ø 239 x 18 x 34.9				94023800	ø 200,0 x 50.5		
					TPM0008								
		645100	Ate		2313001	[–] 23130 19.7	PR 1LQ,1LR.9U0 Ø 256 mm	Luc		2355402	[–] 23554 17.2		⊕ rear disc brake
1.2	07/01→12/07	40 / 54												
1.2	01/03→12/07	47 / 64	Ate	epad	2313081	[–] 23130 19.7	PR 1LQ,1LR.9U0 Ø 256 mm	Luc	epad	2355481	[–] 23554 17.2		⊕ rear disc brake
			VW		2186602	[–] 21866 17.2	PR 1LM,9U0 Ø 239 mm	Luc		82037300			⊕ rear disc brake
			VW		2186801	[+] 21868 17.2	PR 1LM,9U1 Ø 239 mm	Luc		82063300			⊕ rear disc brake
			Ate		2313101	[+] 23131 19.7	PR 1LQ,9U1 Ø 256 mm			91044700	ø 200 x 40		⊕ rear drum brake
			Ate	epad	2313181	[+] 23131 19.7	PR 1LQ,9U1 Ø 256 mm	Ate		97006500			⊕ rear drum brake
			Ate		82062900					84044703	bore ø 19 ø 200 x 40		⊕ rear drum brake
				PRO	92082203	ø 256 x 22 x 36.5	PR 1LQ,1LR		PRO	92082503	ø 232 x 9 x 39.3		⊕ rear disc brake
				PRO	92106803	ø 239 x 18 x 34.9	PR 1LM			TPM0008			
					TPM0008					94023800	ø 200,0 x 50.5		⊕ rear drum brake
		645200	Ate		2313001	[–] 23130 19.7		Luc		2355402	[–] 23554 17.2		⊕ rear disc brake
1.4	04/00→08/02	44 / 60												
1.4	07/01→05/03	50 / 68	Ate	epad	2313081	[–] 23130 19.7		Luc	epad	2355481	[–] 23554 17.2		⊕ rear disc brake
1.4 16V	10/99→12/07	55 / 75												
1.4 16V	04/06→12/07	59 / 80												
1.4 TDI	04/03→12/07	55 / 75	Ate		2313101	[+] 23131 19.7		Luc		82037300			⊕ rear disc brake
1.4 TDI	10/05→12/07	51 / 70												
1.4 TDI	10/05→12/07	59 / 80												
1.9 SDI	11/99→12/07	47 / 64	Ate	epad	2313181	[+] 23131 19.7		Luc		82063300			⊕ rear disc brake
			Ate		82062900					91044700	ø 200 x 40		⊕ rear drum brake
				PRO	92082203	ø 256 x 22 x 36.5		Ate		97006500			⊕ rear drum brake

FABIA Saloon (6Y3) 10/99→12/07

645200														
1.4	04/00→08/02	44 / 60			TPM0008						84044703	bore ø 19 ø 200 x 40	⊕ rear drum brake
1.4	07/01→05/03	50 / 68								PRO	92082503	ø 232 x 9 x 39.3	⊕ rear disc brake
1.4 16V	10/99→12/07	55 / 75									TPM0008		
1.4 16V	04/06→12/07	59 / 80									94023800	ø 200,0 x 50.5	⊕ rear drum brake
1.4 TDI	04/03→12/07	55 / 75											
1.4 TDI	10/05→12/07	51 / 70											
1.4 TDI	10/05→12/07	59 / 80											
1.9 SDI	11/99→12/07	47 / 64											
645300													
1.4 16V	12/99→12/07	74 / 100	Ate		2313001	[–] 23130 19.7		Luc		2355402	[–] 23554 17.2	
1.9 TDI	01/00→12/07	74 / 100											
2.0	12/99→12/07	85 / 116	Ate	epad	2313081	[–] 23130 19.7		Luc	epad	2355481	[–] 23554 17.2	
			Ate		2313101	[+] 23131 19.7		Luc		82037300		
			Ate	epad	2313181	[+] 23131 19.7		Luc		82063300		
			Ate		82062900				PRO	92082503	ø 232 x 9 x 39.3	
				PRO	92082203	ø 256 x 22 x 36.5				TPM0008		
					TPM0008							

FABIA Stufenheck (6Y3) 10/99→12/07 → FABIA Saloon (6Y3), Page 1052

FELICIA I Fun (797) 10/95→04/02

645400			Gir		2166201	[–] 21662 17.8				91044700	ø 200 x 40	
1.3	10/95→04/02	43 / 58	Luc		82062800			Ate		97006500		
					92090200	ø 236 x 12.7 x 45.6				94006700	ø 200,0 x 49.8	
645500			Gir		2166201	[–] 21662 17.8				91044700	ø 200 x 40	
1.3	06/97→04/02	40 / 54										
1.3	06/97→04/02	50 / 68	Luc		82062800			Ate		97006500		
					92090200	ø 236 x 12.7 x 45.6				83044701	bore ø 19 ø 200 x 40	⊖ ABS
										84044705	bore ø 15.9 ø 200 x 40	⊕ ABS
										84044707	bore ø 22.2 ø 200 x 40	⊖ ABS
										94006700	ø 200,0 x 49.8	
645600			Gir		2166201	[–] 21662 17.8				91044700	ø 200 x 40	
1.6	06/97→04/02	55 / 75										
1.9 D	06/97→04/02	47 / 64	Luc		82062800			Ate		97006500		
					92090200	ø 236 x 12.7 x 45.6				83044701	bore ø 19 ø 200 x 40	⊕ reinf.brake
										84044705	bore ø 15.9 ø 200 x 40	⊕ ABS
										84044707	bore ø 22.2 ø 200 x 40	⊕ reinf.brake
										94006700	ø 200,0 x 49.8	

FELICIA II (6U1) 01/98→06/01

645700			Gir		2166201	[–] 21662 17.8				91044700	ø 200 x 40	
1.3	01/98→06/01	40 / 54										
1.3	01/98→06/01	50 / 68	Luc		82062800			Ate		97006500		
					92090200	ø 236 x 12.7 x 45.6				83044701	bore ø 19 ø 200 x 40	⊖ ABS
										84044705	bore ø 15.9 ø 200 x 40	⊕ ABS
										84044707	bore ø 22.2 ø 200 x 40	⊖ ABS
										94006700	ø 200,0 x 49.8	
645800			Gir		2166201	[–] 21662 17.8				91044700	ø 200 x 40	
1.3	01/98→06/01	43 / 58										
			Luc		82062800			Ate		97006500		
					92090200	ø 236 x 12.7 x 45.6				84044705	bore ø 15.9 ø 200 x 40	⊕ ABS
										84044707	bore ø 22.2 ø 200 x 40	⊖ ABS
										94006700	ø 200,0 x 49.8	
645900			Gir		2166201	[–] 21662 17.8				91044700	ø 200 x 40	
1.6	01/98→06/01	55 / 75										

R - S

		kW / hp											
FELICIA II (6U1) 01/98→06/01													
1.9 D	01/98→06/01	47 / 64	Luc		82062800			Ate		97006500		
					92090200	ø 236 x 12.7 x 45.6				84044705	bore ø 15.9 ø 200 x 40	⊕ ABS
										94006700	ø 200,0 x 49.8	
FELICIA II Estate (6U5) 01/98→06/01													
		646000	Gir		2166201	[–] 21662 17.8				91044700	ø 200 x 40	
1.3	01/98→06/01	50 / 68	Luc		82062800			Ate		97006500		
					92090200	ø 236 x 12.7 x 45.6				83044701	bore ø 19 ø 200 x 40	⊖ ABS
										84044705	bore ø 15.9 ø 200 x 40	⊕ ABS
										84044707	bore ø 22.2 ø 200 x 40	⊖ ABS
										94006700	ø 200,0 x 49.8	
		646100	Gir		2166201	[–] 21662 17.8				91044700	ø 200 x 40	
1.6	01/98→06/01	55 / 75										
1.9 D	01/98→06/01	47 / 64	Luc		82062800			Ate		97006500		
					92090200	ø 236 x 12.7 x 45.6				84044705	bore ø 15.9 ø 200 x 40	⊕ ABS
										94006700	ø 200,0 x 49.8	
FELICIA II Kombi (6U5) 01/98→06/01 → FELICIA II Estate (6U5), Page 1054													
FELICIA Fun (797) 10/95→04/02 → FELICIA I Fun (797), Page 1053													
FELICIA Mk II (6U1) 01/98→06/01 → FELICIA II (6U1), Page 1053													
FELICIA Mk II Estate (6U5) 01/98→06/01 → FELICIA II Estate (6U5), Page 1054													
FELICIA Mk II Kombi (6U5) 01/98→06/01 → FELICIA II Estate (6U5), Page 1054													
FELICIA Pickup (797) 10/95→04/02 → FELICIA I Fun (797), Page 1053													
LAURA (1Z3) 02/04→12/10 → OCTAVIA (1Z3), Page 1056													
OCTAVIA (1U2) 09/96→12/10													
		646200	Ate		2313001	[–] 23130 19.7		Luc		2355402	[–] 23554 17.2	⊕ rear disc brake
1.4	04/99→03/01	44 / 60										
1.4 16V	09/00→12/10	55 / 75	Ate	epad	2313081	[–] 23130 19.7		Luc	epad	2355481	[–] 23554 17.2	⊕ rear disc brake
1.6	09/96→09/04	55 / 75										
1.6	11/00→12/10	75 / 102	Ate		2313101	[+] 23131 19.7		Luc		82037300		
1.9 SDI	06/97→12/03	50 / 68	Ate	epad	2313181	[+] 23131 19.7		Luc		82063300		
			Ate		82062900			Ate		91052400	ø 230 x 32	⊕ rear drum brake
				PRO	92082203	ø 256 x 22 x 36.5		Ate		97011300		⊕ rear drum brake
					TPM0008					84052402	bore ø 20.6 ø 230 x 32	⊕ rear drum brake
									PRO	92082503	ø 232 x 9 x 39.3	⊕ rear disc brake
										TPM0008		
										94024300	ø 230,0 x 39	⊕ rear drum brake
		646300	Ate		2313001	[–] 23130 19.7		Luc		2355402	[–] 23554 17.2	⊕ rear disc brake
1.6	02/97→12/07	74 / 101										
			Ate	epad	2313081	[–] 23130 19.7		Luc	epad	2355481	[–] 23554 17.2	⊕ rear disc brake
			Ate		2313101	[+] 23131 19.7		Luc		82037300		
			Ate	epad	2313181	[+] 23131 19.7		Luc		82063300		
			Ate		82062900			Ate		91052400	ø 230 x 32	⊕ rear drum brake
				PRO	92082203	ø 256 x 22 x 36.5		Ate		97011300		⊕ rear drum brake
					TPM0008			Ate		84052400	bore ø 19 ø 230 x 32	⊕ rear drum brake
										84052402	bore ø 20.6 ø 230 x 32	⊕ rear drum brake
									PRO	92082503	ø 232 x 9 x 39.3	⊕ rear disc brake
										TPM0008		

		kW / hp											
OCTAVIA (1U2) 09/96→12/10													
		646300											
1.6	02/97→12/07	74 / 101									**94024300**	ø 230,0 x 39	⊕ rear drum brake
		646400	Ate		**2313001**	[–] 23130 19.7			Luc		**2355402**	[–] 23554 17.2	
1.8	09/96→07/00	92 / 125											
1.9 TDI	08/97→01/06	81 / 110	Ate	epad	**2313081**	[–] 23130 19.7			Luc	epad	**2355481**	[–] 23554 17.2	
2.0	04/99→05/07	85 / 116											
			Ate		**2313101**	[+] 23131 19.7			Luc		**82037300**		
			Ate	epad	**2313181**	[+] 23131 19.7			Luc		**82063300**		
			Ate		**82062900**					PRO	**92082503**	ø 232 x 9 x 39.3	
				PRO	**92082303**	ø 280 x 22 x 36.5					**TPM0008**		
					TPM0008								
		646500	Ate		**2191102**	[–] 21911 20.6			Luc		**2355402**	[–] 23554 17.2	
1.8 T	08/97→12/10	110 / 150											
1.9 TDI	09/02→09/04	96 / 130	Ate		**2339201**	[+] 23392 20.6			Luc	epad	**2355481**	[–] 23554 17.2	
			Ate		**82029300**				Luc		**82037300**		
			Ate		**82062900**				Luc		**82063300**		
				PRO	**92106603**	ø 288 x 25 x 34.4				PRO	**92082503**	ø 232 x 9 x 39.3	
					TPM0008						**TPM0008**		
		646600	Ate		**2191102**	[–] 21911 20.6			Luc		**2355402**	[–] 23554 17.2	
1.8 T 4x4	05/01→05/06	110 / 150											
			Ate		**2339201**	[+] 23392 20.6			Luc	epad	**2355481**	[–] 23554 17.2	
			Ate		**82029300**				Luc		**82037300**		
			Ate		**82062900**				Luc		**82063300**		
				PRO	**92106603**	ø 288 x 25 x 34.4				PRO	**92105803**	ø 239 x 9 x 33.5	
					TPM0008						**TPM0008**		
		646700	Ate		**2313001**	[–] 23130 19.7			Luc		**2355402**	[–] 23554 17.2	⊕ rear disc brake
1.9 TDI	09/96→03/10	66 / 90											
			Ate	epad	**2313081**	[–] 23130 19.7			Luc	epad	**2355481**	[–] 23554 17.2	⊕ rear disc brake
			Ate		**2313101**	[+] 23131 19.7			Luc		**82037300**		
			Ate	epad	**2313181**	[+] 23131 19.7			Luc		**82063300**		
			Ate		**82062900**				Ate		**91052400**	ø 230 x 32	⊕ rear drum brake PR 1KN,1KG
				PRO	**92082303**	ø 280 x 22 x 36.5			Ate		**97011300**		⊕ rear drum brake PR 1KN,1KG
					TPM0008				Ate		**84052400**	bore ø 19 ø 230 x 32	⊕ rear drum brake PR 1KG, 1KN
											84052402	bore ø 20.6 ø 230 x 32	⊕ rear drum brake PR 1KN,1KG
										PRO	**92082503**	ø 232 x 9 x 39.3	⊕ rear disc brake
											TPM0008		
											94024300	ø 230,0 x 39	⊕ rear drum brake PR 1KN,1KG
		646800	Ate		**2313001**	[–] 23130 19.7			Luc		**2355402**	[–] 23554 17.2	⊕ rear disc brake
1.9 TDI	10/05→12/10	74 / 100											
			Ate	epad	**2313081**	[–] 23130 19.7			Luc	epad	**2355481**	[–] 23554 17.2	⊕ rear disc brake
			Ate		**2313101**	[+] 23131 19.7			Luc		**82037300**		
			Ate	epad	**2313181**	[+] 23131 19.7			Luc		**82063300**		
			Ate		**82062900**				Ate		**91052400**	ø 230 x 32	⊕ rear drum brake PR 1KN,1KG
				PRO	**92082303**	ø 280 x 22 x 36.5			Ate		**97011300**		⊕ rear drum brake PR 1KN,1KG
					TPM0008						**84052402**	bore ø 20.6 ø 230 x 32	⊕ rear drum brake PR 1KN,1KG
										PRO	**92082503**	ø 232 x 9 x 39.3	⊕ rear disc brake
											TPM0008		

R - S

		kW / hp											
OCTAVIA (1U2) 09/96→12/10													
1.9 TDI	10/05→12/10	646800 74 / 100								94024300	ø 230,0 x 39		⊕ rear drum brake PR 1KN,1KG
RS 1.8 T	05/01→01/06	646900 132 / 180	Ate		2339201	[+] 23392 20.6		Luc		2355402	[–] 23554 17.2		
			Ate		82029300			Luc		2355481	[–] 23554 17.2		
			Ate		82062900			Luc		82502100			
				PRO	92098503	ø 312 x 25 x 34		Luc		82063300			
					TPM0008				PRO	92098603	ø 256 x 22 x 36.7		
										TPM0008			
OCTAVIA (1Z3) 02/04→12/10													
1.2 TSI	02/10→	647000 77 / 105	Ate		2313101	[+] 23131 19.7		Luc		2355402	[–] 23554 17.2		
1.4	05/04→05/06	55 / 75											
1.4	06/04→	59 / 80	Ate	epad	2313181	[+] 23131 19.7		Luc	epad	2355481	[–] 23554 17.2		
1.6 TDI	06/09→	77 / 105											
			Ate		82062900			Luc		82037300			
				PRO	92120703	ø 280 x 22 x 49.9		Luc		82062800			
				PRO	92120705	ø 280 x 22 x 49.9			PRO	92120903	ø 255 x 10 x 51.6		
					TPM0008					TPM0008			
1.4 TSI	11/08→	647100 90 / 122	Ate		2313101	[+] 23131 19.7		Bos		2456301	[–] 24563 17.7		PR 1KS,1KT
			Ate	epad	2313181	[+] 23131 19.7		Luc		2391401	[o] 23914 17.2		PR 1KF Ø 256 mm
			Ate		82062900			Luc	epad	2391481	[o] 23914 17.2		PR 1KF Ø 256 mm
				PRO	92120703	ø 280 x 22 x 49.9		Bos		82054300			PR 1KS,1KT
				PRO	92120705	ø 280 x 22 x 49.9		Luc		82509000			PR 1KF Ø 256 mm
					TPM0008				PRO	92121103	ø 256 x 12 x 48.4		PR 1KF
									PRO	92224903	ø 272 x 10 x 48.3		PR 1KS,1KT
										TPM0008			
1.6	06/04→	647200 75 / 102	Ate		2313101	[+] 23131 19.7		Luc		2355402	[–] 23554 17.2		PR 1KD Ø 253 mm
			Ate	epad	2313181	[+] 23131 19.7		Luc	epad	2355481	[–] 23554 17.2		PR 1KD Ø 253 mm
			Ate		82062900			Luc		2391401	[o] 23914 17.2		PR 1KF Ø 256 mm
				PRO	92120703	ø 280 x 22 x 49.9		Luc	epad	2391481	[o] 23914 17.2		PR 1KF Ø 256 mm
				PRO	92120705	ø 280 x 22 x 49.9		Luc		82037300			PR 1KD Ø 253 mm
					TPM0008			Luc		82509000			PR 1KF Ø 256 mm
								Luc		82062800			PR 1KD
									PRO	92120903	ø 255 x 10 x 51.6		PR 1KD
									PRO	92121103	ø 256 x 12 x 48.4		PR 1KF
										TPM0008			
1.6 FSI	02/04→10/08	647300 85 / 115	Ate		2313101	[+] 23131 19.7		Luc		2391401	[o] 23914 17.2		
			Ate	epad	2313181	[+] 23131 19.7		Luc	epad	2391481	[o] 23914 17.2		
			Ate		82062900			Luc		82509000			
				PRO	92120703	ø 280 x 22 x 49.9			PRO	92121103	ø 256 x 12 x 48.4		
				PRO	92120705	ø 280 x 22 x 49.9				TPM0008			
					TPM0008								
1.6 LPG	08/09→	647400 75 / 102	Ate		2313101	[+] 23131 19.7		Bos		2456301	[–] 24563 17.7		PR 1KS,1KT
			Ate	epad	2313181	[+] 23131 19.7		Luc		2391401	[o] 23914 17.2		PR 1KP Ø 286 mm PR 1KF Ø 256 mm

OCTAVIA (1Z3) 02/04→12/10

			kW / hp											
1.6 LPG	08/09→	647400	75 / 102	Ate		82062900			Luc		2391481	[o] 23914 17.2	PR 1KP Ø 286 mm PR 1KF Ø 256 mm
					PRO	92120503	ø 312 x 25 x 49.7		Bos		82054300		PR 1KS,1KT
					PRO	92120703	ø 280 x 22 x 49.9		Luc		82509000		PR 1KP Ø 286 mm PR 1KF Ø 256 mm
					PRO	92120705	ø 280 x 22 x 49.9		Luc		82063300		PR 1KF
						TPM0008				PRO	92121103	ø 256 x 12 x 48.4	PR 1KF
										PRO	92224903	ø 272 x 10 x 48.3	PR 1KS,1KT
											TPM0008		
1.6 MultiFuel	01/08→	647500	75 / 102	Ate		2313101	[+] 23131 19.7		Luc		2355402	[–] 23554 17.2	PR 1KD Ø 253 mm
				Ate	epad	2313181	[+] 23131 19.7		Luc	epad	2355481	[–] 23554 17.2	PR 1KD Ø 253 mm
				Ate		82062900			Bos		2456301	[–] 24563 17.7	PR 1KS,1KT
					PRO	92120703	ø 280 x 22 x 49.9		Luc		2391401	[o] 23914 17.2	PR 1KP Ø 286 mm PR 1KF Ø 256 mm
					PRO	92120705	ø 280 x 22 x 49.9		Luc	epad	2391481	[o] 23914 17.2	PR 1KP Ø 286 mm PR 1KF Ø 256 mm
						TPM0008			Luc		82037300		PR 1KD Ø 253 mm
									Bos		82054300		PR 1KS,1KT
									Luc		82509000		PR 1KP Ø 286 mm PR 1KF Ø 256 mm
									Luc		82062800		PR 1KD
										PRO	92120903	ø 255 x 10 x 51.6	PR 1KD
										PRO	92121103	ø 256 x 12 x 48.4	PR 1KF
										PRO	92224903	ø 272 x 10 x 48.3	PR 1KS,1KT
											TPM0008		
1.8 TSI	06/07→	647600	118 / 160	Ate		2358701	[+] 23587 20.3		Bos		2456301	[–] 24563 17.7	PR 1KS,1KT
1.8 TSI	03/09→		112 / 152										
2.0 TDI 16V	02/04→		103 / 140	Ate	epad	2358781	[+] 23587 20.3		Luc		2391401	[o] 23914 17.2	PR 1KF Ø 256 mm
				Ate		82062900			Luc	epad	2391481	[o] 23914 17.2	PR 1KF Ø 256 mm
				Ate		82076800			Bos		82054300		PR 1KS,1KT
					PRO	92120803	ø 288 x 25 x 49.8		Luc		82509000		PR 1KF Ø 256 mm
					PRO	92120805	ø 288 x 25 x 49.8			PRO	92121103	ø 256 x 12 x 48.4	PR 1KF
						TPM0008				PRO	92224903	ø 272 x 10 x 48.3	PR 1KS,1KT
											TPM0008		
1.9 TDI	06/04→12/10	647700	77 / 105	Ate		2313101	[+] 23131 19.7	PR 1ZF,1ZM Ø 280 mm	Luc		2355402	[–] 23554 17.2	PR 1KD Ø 253 mm
				Ate	epad	2313181	[+] 23131 19.7	PR 1ZF,1ZM Ø 280 mm	Luc	epad	2355481	[–] 23554 17.2	PR 1KD Ø 253 mm
				Ate		2358701	[+] 23587 20.3	PR 1ZE Ø 288 mm	Luc		2391401	[o] 23914 17.2	PR 1KF Ø 256 mm
				Ate	epad	2358781	[+] 23587 20.3	PR 1ZE Ø 288 mm	Luc	epad	2391481	[o] 23914 17.2	PR 1KF Ø 256 mm
				Ate		82062900			Luc		82037300		PR 1KD Ø 253 mm
				Ate		82076800		PR 1ZE Ø 288 mm	Luc		82509000		PR 1KF Ø 256 mm
					PRO	92120703	ø 280 x 22 x 49.9	PR 1ZF,1ZM	Luc		82062800		PR 1KD
					PRO	92120705	ø 280 x 22 x 49.9	PR 1ZF,1ZM		PRO	92120903	ø 255 x 10 x 51.6	PR 1KD
					PRO	92120803	ø 288 x 25 x 49.8	PR 1ZE		PRO	92121103	ø 256 x 12 x 48.4	PR 1KF
					PRO	92120805	ø 288 x 25 x 49.8	PR 1ZE			TPM0008		
						TPM0008							
2.0 FSI	11/04→	647800	110 / 150	Ate		2358701	[+] 23587 20.3		Luc		2391401	[o] 23914 17.2	
2.0 TDI	02/04→05/10		100 / 136										

R - S

			kW / hp											
OCTAVIA (1Z3) 02/04→12/10														
2.0 TDI	11/05→	103 / 140	647900	Ate		**2358781**	[+] 23587 20.3		Luc		**2391481**	[o] 23914 17.2	
				Ate		**82062900**			Luc		**82509000**		
				Ate		**82076800**				PRO	**92121103**	ø 256 x 12 x 48.4	
					PRO	**92120803**	ø 288 x 25 x 49.8				**TPM0008**		
					PRO	**92120805**	ø 288 x 25 x 49.8						
						TPM0008							
2.0 RS	10/05→	147 / 200	647900	Ate		**2358701**	[+] 23587 20.3		Luc		**2391401**	[o] 23914 17.2	
				Ate		**2358781**	[+] 23587 20.3		Luc		**2391481**	[o] 23914 17.2	
				Ate		**82062900**			Luc		**82509000**		
				Ate		**82076800**			Luc		**82063300**		
					PRO	**92120503**	ø 312 x 25 x 49.7			PRO	**92140803**	ø 282 x 12 x 48.5	
						TPM0008					**TPM0008**		
2.0 TDI	03/10→	81 / 110	648000	Ate		**2358701**	[+] 23587 20.3		Bos		**2456301**	[–] 24563 17.7	
				Ate		**2358781**	[+] 23587 20.3		Bos		**82054300**		
				Ate		**82062900**				PRO	**92224903**	ø 272 x 10 x 48.3	
				Ate		**82076800**					**TPM0008**		
					PRO	**92120803**	ø 288 x 25 x 49.8						
					PRO	**92120805**	ø 288 x 25 x 49.8						
						TPM0008							
2.0 TDI RS	04/06→	125 / 170	648100	Ate		**2358701**	[+] 23587 20.3		Luc		**2391401**	[o] 23914 17.2	Lucas
				Ate		**2358781**	[+] 23587 20.3		Luc		**2391481**	[o] 23914 17.2	Lucas
				Ate		**82062900**			Luc		**82509000**		Lucas
				Ate		**82076800**			Luc		**82063300**		Lucas
					PRO	**92120503**	ø 312 x 25 x 49.7			PRO	**92140803**	ø 282 x 12 x 48.5	Lucas
						TPM0008					**TPM0008**		
OCTAVIA (5E3) 11/12→														
1.2 TSI	11/12→	63 / 86	648200	TRW		**2473801**	[+] 24738 20	PR 1LG Ø 340 mm	Luc		**2511001**	[–] 25110 17.5	PR 1KS,1KT Ø 272 mm
1.2 TSI	11/12→	77 / 105		TRW		**2568301**	[+] 25683 20.3	PR 1ZE Ø 288 mm	Luc		**2355402**	[–] 23554 17.2	PR 1KD
1.4 TSI	11/12→	103 / 140						PR 1ZA Ø 312 mm					
1.6 TDI	11/12→	66 / 90			PRO	**92120503**	ø 312 x 25 x 49.7	PR 1ZA	Luc		**2355481**	[–] 23554 17.2	PR 1KD
1.6 TDI	11/12→	77 / 105			PRO	**92120803**	ø 288 x 25 x 49.8	PR 1ZE		PRO	**92120903**	ø 255 x 10 x 51.6	PR 1KD
1.8 TSI	11/12→	132 / 180			PRO	**92120805**	ø 288 x 25 x 49.8	PR 1ZE		PRO	**92224903**	ø 272 x 10 x 48.3	PR 1KS,1KT
2.0 TDI	11/12→	105 / 143			PRO	**92229803**	ø 340 x 30 x 49.7	PR 1ZB			**TPM0008**		
2.0 TDI	11/12→	110 / 150				**TPM0008**							
2.0 TDI RS	05/13→	135 / 184											
2.0 TSI RS	05/13→	162 / 220											
1.6 TDI	05/13→	81 / 110	648300	Ate		**2313101**	[+] 23131 19.7	PR 1ZF	Luc		**2355402**	[–] 23554 17.2	PR 1KD
				Ate		**2313181**	[+] 23131 19.7	PR 1ZF	Luc		**2355481**	[–] 23554 17.2	PR 1KD
				Ate		**2358701**	[+] 23587 20.3	PR 1ZE,1LL,1ZB	Bos		**2456301**	[–] 24563 17.7	PR 1KS,1KT
				Ate		**2358781**	[+] 23587 20.3	PR 1ZE,1LL,1ZB	Luc		**2391401**	[o] 23914 17.2	PR 1KP,1KF
				Ate		**82076800**		PR 1ZE,1LL,1ZB	Luc		**2391481**	[o] 23914 17.2	PR 1KP,1KF
					PRO	**92120503**	ø 312 x 25 x 49.7	PR 1LL,1ZB	Bos		**82054300**		PR 1KS,1KT
					PRO	**92120703**	ø 280 x 22 x 49.9	PR 1ZF	Luc		**82509000**		PR 1KD,1KP,1KF

R-S

		kW / hp										
OCTAVIA (5E3) 11/12→												
		648300		PRO	92120705	ø 280 x 22 x 49.9	PR 1ZF		PRO	92120903	ø 255 x 10 x 51.6	PR 1KD
1.6 TDI	05/13→	81 / 110		PRO	92120803	ø 288 x 25 x 49.8	PR 1ZE		PRO	92121103	ø 256 x 12 x 48.4	PR 1KF
				PRO	92120805	ø 288 x 25 x 49.8	PR 1ZE		PRO	92140803	ø 282 x 12 x 48.5	PR 1KP
					TPM0008				PRO	92224903	ø 272 x 10 x 48.3	PR 1KS,1KT
										TPM0008		
OCTAVIA Combi (1U5) 07/98→12/10												
		648400	Ate		2313001	[–] 23130 19.7		Luc		2355402	[–] 23554 17.2	⊕ rear disc brake
1.4 16V	08/00→12/10	55 / 75										
1.6	07/98→09/04	55 / 75	Ate	epad	2313081	[–] 23130 19.7		Luc	epad	2355481	[–] 23554 17.2	⊕ rear disc brake
			Ate		2313101	[+] 23131 19.7		Luc		82037300		
			Ate	epad	2313181	[+] 23131 19.7		Luc		82063300		
			Ate		82062900			Ate		91052400	ø 230 x 32	⊕ rear drum brake
				PRO	92082203	ø 256 x 22 x 36.5		Ate		97011300		⊕ rear drum brake
					TPM0008					84052402	bore ø 20.6 ø 230 x 32	⊕ rear drum brake
									PRO	92082503	ø 232 x 9 x 39.3	⊕ rear disc brake
										TPM0008		
										94024300	ø 230,0 x 39	⊕ rear drum brake
		648500	Ate		2313001	[–] 23130 19.7		Luc		2355402	[–] 23554 17.2	⊕ rear disc brake
1.6	07/98→12/07	74 / 101										
1.6	09/00→12/10	75 / 102										
1.9 SDI	07/98→12/03	50 / 68	Ate	epad	2313081	[–] 23130 19.7		Luc	epad	2355481	[–] 23554 17.2	⊕ rear disc brake
			Ate		2313101	[+] 23131 19.7		Luc		82037300		
			Ate	epad	2313181	[+] 23131 19.7		Luc		82063300		
			Ate		82062900			Ate		91052400	ø 230 x 32	⊕ rear drum brake
				PRO	92082203	ø 256 x 22 x 36.5		Ate		97011300		⊕ rear drum brake
					TPM0008			Ate		84052400	bore ø 19 ø 230 x 32	⊕ rear drum brake
										84052402	bore ø 20.6 ø 230 x 32	⊕ rear drum brake
									PRO	92082503	ø 232 x 9 x 39.3	⊕ rear disc brake
										TPM0008		
										94024300	ø 230,0 x 39	⊕ rear drum brake
		648600	Ate		2313001	[–] 23130 19.7		Luc		2355402	[–] 23554 17.2	
1.8 20V	07/98→07/00	92 / 125										
1.9 TDI	07/98→01/06	81 / 110										
2.0	04/99→05/07	85 / 116	Ate	epad	2313081	[–] 23130 19.7		Luc	epad	2355481	[–] 23554 17.2	
			Ate		2313101	[+] 23131 19.7		Luc		82037300		
			Ate	epad	2313181	[+] 23131 19.7		Luc		82063300		
			Ate		82062900				PRO	92082503	ø 232 x 9 x 39.3	
				PRO	92082303	ø 280 x 22 x 36.5				TPM0008		
					TPM0008							
		648700	Ate		2191102	[–] 21911 20.6		Luc		2355402	[–] 23554 17.2	
1.8 T	07/98→12/10	110 / 150										
1.9 TDI	09/02→09/04	96 / 130	Ate		2339201	[+] 23392 20.6		Luc	epad	2355481	[–] 23554 17.2	
			Ate		82029300			Luc		82037300		
			Ate		82062900			Luc		82063300		
				PRO	92106603	ø 288 x 25 x 34.4			PRO	92082503	ø 232 x 9 x 39.3	
					TPM0008					TPM0008		

R - S

		kW / hp										
OCTAVIA Combi (1U5) 07/98→12/10												
		648800	Ate		2191102	[–] 21911 20.6		Luc		2355402	[–] 23554 17.2	
1.8 T 4x4	05/01→05/06	110 / 150	Ate		2339201	[+] 23392 20.6		Luc		2355481	[–] 23554 17.2	
			Ate		82029300			Luc		82037300		
			Ate		82062900			Luc		82063300		
				PRO	92106603	ø 288 x 25 x 34.4			PRO	92105803	ø 239 x 9 x 33.5	
					TPM0008					TPM0008		
		648900	Ate		2313001	[–] 23130 19.7		Luc		2355402	[–] 23554 17.2	⊕ rear disc brake
1.9 TDI	07/98→03/10	66 / 90	Ate	epad	2313081	[–] 23130 19.7		Luc	epad	2355481	[–] 23554 17.2	⊕ rear disc brake
			Ate		2313101	[+] 23131 19.7		Luc		82037300		
			Ate	epad	2313181	[+] 23131 19.7		Luc		82063300		
			Ate		82062900			Ate		91052400	ø 230 x 32	⊕ rear drum brake
				PRO	92082303	ø 280 x 22 x 36.5		Ate		97011300		⊕ rear drum brake
					TPM0008			Ate		84052400	bore ø 19 ø 230 x 32	⊕ rear drum brake
										84052402	bore ø 20.6 ø 230 x 32	⊕ rear drum brake
									PRO	92082503	ø 232 x 9 x 39.3	⊕ rear disc brake
										TPM0008		
										94024300	ø 230,0 x 39	⊕ rear drum brake
		649000	Ate		2313001	[–] 23130 19.7		Luc		2355402	[–] 23554 17.2	⊕ rear disc brake
1.9 TDI	08/00→12/10	74 / 100	Ate	epad	2313081	[–] 23130 19.7		Luc	epad	2355481	[–] 23554 17.2	⊕ rear disc brake
			Ate		2313101	[+] 23131 19.7		Luc		82037300		
			Ate	epad	2313181	[+] 23131 19.7		Luc		82063300		
			Ate		82062900				PRO	92082503	ø 232 x 9 x 39.3	⊕ rear disc brake
				PRO	92082303	ø 280 x 22 x 36.5				TPM0008		
					TPM0008					94024300	ø 230,0 x 39	⊕ rear drum brake
		649100	Ate		2313001	[–] 23130 19.7		Luc		2355402	[–] 23554 17.2	
1.9 TDI 4x4	11/99→02/06	66 / 90										
1.9 TDI 4x4	09/00→01/06	74 / 100										
2.0 4x4	01/00→12/10	88 / 120	Ate	epad	2313081	[–] 23130 19.7		Luc	epad	2355481	[–] 23554 17.2	
2.0 4x4	08/00→09/04	85 / 116										
			Ate		2313101	[+] 23131 19.7		Luc		82037300		
			Ate	epad	2313181	[+] 23131 19.7		Luc		82063300		
			Ate		82062900				PRO	92105803	ø 239 x 9 x 33.5	
				PRO	92082303	ø 280 x 22 x 36.5				TPM0008		
					TPM0008							
		649200	Ate		2339201	[+] 23392 20.6		Luc		2355402	[–] 23554 17.2	
RS 1.8 T	08/02→01/06	132 / 180	Ate		82029300			Luc	epad	2355481	[–] 23554 17.2	
			Ate		82062900			Luc		82502100		
				PRO	92098503	ø 312 x 25 x 34		Luc		82063300		
					TPM0008				PRO	92098603	ø 256 x 22 x 36.7	
										TPM0008		
OCTAVIA Combi (1Z5) 02/04→12/10												
		649300	Ate		2313101	[+] 23131 19.7		Luc		2355402	[–] 23554 17.2	
1.2 TSI	02/10→	77 / 105										
1.4	05/06→	59 / 80										
1.6	09/04→	75 / 102	Ate	epad	2313181	[+] 23131 19.7		Luc	epad	2355481	[–] 23554 17.2	
1.6 LPG	08/09→	75 / 102										
1.6 MultiFuel	01/08→	75 / 102										

OCTAVIA Combi (1Z5) 02/04→12/10

		kW / hp											
		649300	Ate		82062900			Luc		82037300			
1.2 TSI	02/10→	77 / 105											
1.4	05/06→	59 / 80		PRO	92120703	ø 280 x 22 x 49.9		Luc		82062800			
1.6	09/04→	75 / 102											
1.6 LPG	08/09→	75 / 102		PRO	92120705	ø 280 x 22 x 49.9			PRO	92120903	ø 255 x 10 x 51.6		
1.6 MultiFuel	01/08→	75 / 102											
					TPM0008					TPM0008			
		649400	Ate		2313101	[+] 23131 19.7		Luc		2355402	[–] 23554 17.2		
1.4	05/04→05/06	55 / 75											
			Ate	epad	2313181	[+] 23131 19.7		Luc	epad	2355481	[–] 23554 17.2		
			Ate		82062900			Luc		82037300			
				PRO	92120703	ø 280 x 22 x 49.9		Bos		82054300			
				PRO	92120705	ø 280 x 22 x 49.9		Luc		82062800			
					TPM0008				PRO	92120903	ø 255 x 10 x 51.6		
										TPM0008			
		649500	Ate		2313101	[+] 23131 19.7		Bos		2456301	[–] 24563 17.7		PR 1KS,1KT
1.4 TSI	11/08→	90 / 122											
			Ate	epad	2313181	[+] 23131 19.7		Luc		2391401	[o] 23914 17.2		PR 1KF Ø 256 mm
			Ate		82062900			Luc	epad	2391481	[o] 23914 17.2		PR 1KF Ø 256 mm
				PRO	92120703	ø 280 x 22 x 49.9		Bos		82054300			PR 1KS,1KT
				PRO	92120705	ø 280 x 22 x 49.9		Luc		82509000			PR 1KF Ø 256 mm
					TPM0008				PRO	92121103	ø 256 x 12 x 48.4		PR 1KF
									PRO	92224903	ø 272 x 10 x 48.3		PR 1KS,1KT
										TPM0008			
		649600	Ate		2313101	[+] 23131 19.7		Luc		2391401	[o] 23914 17.2		
1.6 FSI	02/04→10/08	85 / 115											
			Ate	epad	2313181	[+] 23131 19.7		Luc	epad	2391481	[o] 23914 17.2		
			Ate		82062900			Luc		82509000			
				PRO	92120703	ø 280 x 22 x 49.9			PRO	92121103	ø 256 x 12 x 48.4		
				PRO	92120705	ø 280 x 22 x 49.9				TPM0008			
					TPM0008								
		649700	Ate		2313101	[+] 23131 19.7		Luc		2355402	[–] 23554 17.2		PR 1KD Ø 253 mm
1.6 TDI	06/09→	77 / 105											
			Ate	epad	2313181	[+] 23131 19.7		Luc	epad	2355481	[–] 23554 17.2		PR 1KD Ø 253 mm
			Ate		82062900			Bos		2456301	[–] 24563 17.7		PR 1KS,1KT
				PRO	92120703	ø 280 x 22 x 49.9		Luc		82037300			PR 1KD Ø 253 mm
				PRO	92120705	ø 280 x 22 x 49.9		Bos		82054300			PR 1KS,1KT
					TPM0008			Luc		82062800			PR 1KD
									PRO	92120903	ø 255 x 10 x 51.6		PR 1KD
									PRO	92224903	ø 272 x 10 x 48.3		PR 1KS,1KT
										TPM0008			
		649800	Ate		2313101	[+] 23131 19.7	PR 1ZF,1ZM Ø 280 mm	Bos		2456301	[–] 24563 17.7		PR 1KS,1KT
1.6 TDI 4x4	06/09→	77 / 105											
1.8 TSI 4x4	11/08→	118 / 160	Ate	epad	2313181	[+] 23131 19.7	PR 1ZF,1ZM Ø 280 mm	Luc		2391401	[o] 23914 17.2		PR 1KP Ø 286 mm
1.8 TSI 4x4	03/09→	112 / 152											PR 1KF Ø 256 mm
1.9 TDI 4x4	11/04→12/10	77 / 105											
2.0 FSI 4x4	11/04→	110 / 150	Ate		2358701	[+] 23587 20.3	PR 1ZE Ø 288 mm	Luc	epad	2391481	[o] 23914 17.2		PR 1KP Ø 286 mm
2.0 TDI 16V 4x4	05/10→	103 / 140					PR 1LL,1LP Ø 312 mm						PR 1KF Ø 256 mm
2.0 TDI 4x4	07/06→	103 / 140	Ate	epad	2358781	[+] 23587 20.3	PR 1ZE Ø 288 mm	Bos		82054300			PR 1KS,1KT
							PR 1LL,1LP Ø 312 mm						
			Ate		82062900			Luc		82509000			PR 1KP Ø 286 mm
													PR 1KF Ø 256 mm
			Ate		82076800		PR 1ZE Ø 288 mm	Luc		82063300			PR 1KF
							PR 1LL,1LP Ø 312 mm						

R - S

OCTAVIA Combi (1Z5) 02/04→12/10

		kW / hp											
		649800											
1.6 TDI 4x4	06/09→	77 / 105		PRO	92120503	ø 312 x 25 x 49.7	PR 1LL,1LP		PRO	92121103	ø 256 x 12 x 48.4	PR 1KF
1.8 TSI 4x4	11/08→	118 / 160		PRO	92120703	ø 280 x 22 x 49.9	PR 1ZF,1ZM		PRO	92224903	ø 272 x 10 x 48.3	PR 1KS,1KT
1.8 TSI 4x4	03/09→	112 / 152		PRO	92120705	ø 280 x 22 x 49.9	PR 1ZF,1ZM			TPM0008		
1.9 TDI 4x4	11/04→12/10	77 / 105		PRO	92120803	ø 288 x 25 x 49.8	PR 1ZE					
2.0 FSI 4x4	11/04→	110 / 150		PRO	92120805	ø 288 x 25 x 49.8	PR 1ZE					
2.0 TDI 16V 4x4	05/10→	103 / 140			TPM0008							
2.0 TDI 4x4	07/06→	103 / 140										
		649900	Ate		2358701	[+] 23587 20.3		Bos		2456301	[–] 24563 17.7	PR 1KS,1KT
1.8 TSI	06/07→	118 / 160	Ate	epad	2358781	[+] 23587 20.3		Luc		2391401	[o] 23914 17.2	PR 1KF Ø 256 mm
			Ate		82062900			Luc	epad	2391481	[o] 23914 17.2	PR 1KF Ø 256 mm
			Ate		82076800			Bos		82054300		PR 1KS,1KT
				PRO	92120803	ø 288 x 25 x 49.8		Luc		82509000		PR 1KF Ø 256 mm
				PRO	92120805	ø 288 x 25 x 49.8			PRO	92121103	ø 256 x 12 x 48.4	PR 1KF
					TPM0008				PRO	92224903	ø 272 x 10 x 48.3	PR 1KS,1KT
										TPM0008		
		650000	Ate		2358701	[+] 23587 20.3		Bos		2456301	[–] 24563 17.7	
1.8 TSI	03/09→	112 / 152	Ate	epad	2358781	[+] 23587 20.3		Bos		82054300		
2.0 TDI	03/10→	81 / 110	Ate		82062900				PRO	92224903	ø 272 x 10 x 48.3	
2.0 TDI 4x4	05/11→	81 / 110	Ate		82076800					TPM0008		
				PRO	92120803	ø 288 x 25 x 49.8						
				PRO	92120805	ø 288 x 25 x 49.8						
					TPM0008							
		650100	Ate		2313101	[+] 23131 19.7	PR 1ZF,1ZM Ø 280 mm	Luc		2355402	[–] 23554 17.2	
1.9 TDI	09/04→12/10	77 / 105	Ate	epad	2313181	[+] 23131 19.7	PR 1ZF,1ZM Ø 280 mm	Luc	epad	2355481	[–] 23554 17.2	
			Ate		2358701	[+] 23587 20.3	PR 1ZE Ø 288 mm	Luc		82037300		
			Ate	epad	2358781	[+] 23587 20.3	PR 1ZE Ø 288 mm	Luc		82062800		
			Ate		82062900				PRO	92120903	ø 255 x 10 x 51.6	
			Ate		82076800		PR 1ZE Ø 288 mm			TPM0008		
				PRO	92120703	ø 280 x 22 x 49.9	PR 1ZF,1ZM					
				PRO	92120705	ø 280 x 22 x 49.9	PR 1ZF,1ZM					
				PRO	92120803	ø 288 x 25 x 49.8	PR 1ZE					
				PRO	92120805	ø 288 x 25 x 49.8	PR 1ZE					
					TPM0008							
		650200	Ate		2358701	[+] 23587 20.3		Luc		2391401	[o] 23914 17.2	
2.0 FSI	11/04→	110 / 150	Ate	epad	2358781	[+] 23587 20.3		Luc	epad	2391481	[o] 23914 17.2	
2.0 TDI	11/05→	103 / 140	Ate		82062900			Luc		82509000		
2.0 TDI 16V	02/04→05/10	100 / 136	Ate		82076800				PRO	92121103	ø 256 x 12 x 48.4	
				PRO	92120803	ø 288 x 25 x 49.8				TPM0008		
				PRO	92120805	ø 288 x 25 x 49.8						
					TPM0008							
		650300	Ate		2358701	[+] 23587 20.3		Luc		2391401	[o] 23914 17.2	
2.0 RS	10/05→	147 / 200										

OCTAVIA Combi (1Z5) 02/04→12/10

		kW / hp											
650300			Ate		2358781	[+] 23587 20.3		Luc		2391481	[o] 23914 17.2	
2.0 RS	10/05→	147 / 200		epad					epad			
			Ate		82062900			Luc		82509000		
			Ate		82076800			Luc		82063300		
				PRO	92120503	ø 312 x 25 x 49.7			PRO	92140803	ø 282 x 12 x 48.5	
					TPM0008					TPM0008		
650400			Ate		2358701	[+] 23587 20.3		Bos		2456301	[–] 24563 17.7	PR 1KS,1KT
2.0 TDI 16V	02/04→	103 / 140	Ate	epad	2358781	[+] 23587 20.3		Luc		2391401	[o] 23914 17.2	PR 1KF Ø 256 mm
			Ate		82062900			Luc	epad	2391481	[o] 23914 17.2	PR 1KF Ø 256 mm
			Ate		82076800			Bos		82054300		PR 1KS,1KT
				PRO	92120803	ø 288 x 25 x 49.8		Luc		82509000		PR 1KF Ø 256 mm
				PRO	92120805	ø 288 x 25 x 49.8			PRO	92224903	ø 272 x 10 x 48.3	PR 1KS,1KT
					TPM0008					TPM0008		
650500			Ate		2358701	[+] 23587 20.3		Bos		2456301	[–] 24563 17.7	Bosch
2.0 TDI RS	04/06→	125 / 170	Ate	epad	2358781	[+] 23587 20.3		Luc		2391401	[o] 23914 17.2	Lucas
			Ate		82062900			Luc	epad	2391481	[o] 23914 17.2	Lucas
			Ate		82076800			Bos		82054300		Bosch
				PRO	92120503	ø 312 x 25 x 49.7		Luc		82509000		Lucas
					TPM0008			Luc		82063300		Lucas
									PRO	92140803	ø 282 x 12 x 48.5	Lucas
									PRO	92224903	ø 272 x 10 x 48.3	Bosch
										TPM0008		

OCTAVIA Combi (5E5) 11/12→

		kW / hp											
650600			TRW		2473801	[+] 24738 20	PR 1LG Ø 340 mm	Luc		2511001	[–] 25110 17.5	PR 1KS,1KT Ø 272 mm
1.2 TSI	11/12→	63 / 86										
1.2 TSI	11/12→	77 / 105	TRW		2568301	[+] 25683 20.3	PR 1ZE Ø 288 mm	Luc		2355402	[–] 23554 17.2	PR 1KD
1.4 TSI	11/12→	103 / 140					PR 1ZA Ø 312 mm					
1.6 TDI	11/12→	66 / 90										
1.6 TDI	11/12→	77 / 105		PRO	92120503	ø 312 x 25 x 49.7	PR 1ZA	Luc	epad	2355481	[–] 23554 17.2	PR 1KD
1.6 TDI 4x4	11/12→	77 / 105										
1.8 TSI	11/12→	132 / 180		PRO	92120803	ø 288 x 25 x 49.8	PR 1ZE		PRO	92120903	ø 255 x 10 x 51.6	PR 1KD
1.8 TSI 4x4	11/12→	132 / 180										
2.0 TDI	11/12→	105 / 143		PRO	92120805	ø 288 x 25 x 49.8	PR 1ZE		PRO	92224903	ø 272 x 10 x 48.3	PR 1KS,1KT
2.0 TDI	11/12→	110 / 150										
2.0 TDI 4x4	11/12→	110 / 150		PRO	92229803	ø 340 x 30 x 49.7	PR 1ZB			TPM0008		
2.0 TDI RS	05/13→	135 / 184										
2.0 TSI RS	11/12→	162 / 220			TPM0008							
650700			Ate		2313101	[+] 23131 19.7	PR 1ZF	Luc		2355402	[–] 23554 17.2	PR 1KD
1.6 TDI	05/13→	81 / 110	Ate	epad	2313181	[+] 23131 19.7	PR 1ZF	Luc	epad	2355481	[–] 23554 17.2	PR 1KD
			Ate		2358701	[+] 23587 20.3	PR 1ZE,1LL,1ZB	Bos		2456301	[–] 24563 17.7	PR 1KS,1KT
			Ate	epad	2358781	[+] 23587 20.3	PR 1ZE,1LL,1ZB	Luc		2391401	[o] 23914 17.2	PR 1KP,1KF
			Ate		82076800		PR 1ZE,1LL,1ZB	Luc	epad	2391481	[o] 23914 17.2	PR 1KP,1KF
				PRO	92120503	ø 312 x 25 x 49.7	PR 1LL,1ZB	Bos		82054300		PR 1KS,1KT
				PRO	92120703	ø 280 x 22 x 49.9	PR 1ZF	Luc		82509000		PR 1KD,1KP,1KF
				PRO	92120705	ø 280 x 22 x 49.9	PR 1ZF		PRO	92120903	ø 255 x 10 x 51.6	PR 1KD
				PRO	92120803	ø 288 x 25 x 49.8	PR 1ZE		PRO	92121103	ø 256 x 12 x 48.4	PR 1KF
				PRO	92120805	ø 288 x 25 x 49.8	PR 1ZE		PRO	92140803	ø 282 x 12 x 48.5	PR 1KP
					TPM0008				PRO	92224903	ø 272 x 10 x 48.3	PR 1KS,1KT

R - S

		kW / hp										
OCTAVIA Combi (5E5) 11/12→												
		650700										
1.6 TDI	05/13→	81 / 110							TPM0008			
PRAKTIK (5J) 03/06→03/10 → ROOMSTER (5J), Page 1065												
RAPID (NA2) 10/11→												
		650800	TRW		2568101	[–] 25681 18			TPM0008			
1.6	10/11→	77 / 105										
1.6 TDI	10/11→	77 / 105			TPM0008							
RAPID (NH3) 07/12→												
		650900	Ate		2313001	[–] 23130 19.7		Luc	2355402	[–] 23554 17.2		
1.2	07/12→	55 / 75										
1.2 TSI	07/12→	63 / 86	Ate		2313081	[–] 23130 19.7		Luc	2355481	[–] 23554 17.2		
			Ate		82062900			Luc	82037300			
				PRO	92082203	ø 256 x 22 x 36.5			91080100	ø 228.4 x 32.5	PR 1KL	
					TPM0008				PRO 92082503	ø 232 x 9 x 39.3		
									TPM0008			
		651000	Ate		2358701	[+] 23587 20.3		Luc	2355402	[–] 23554 17.2		
1.2 TSI	07/12→	77 / 105										
1.4 TSI	07/12→	90 / 122	Ate		2358781	[+] 23587 20.3		Luc	2355481	[–] 23554 17.2		
1.6	07/12→	77 / 105										
1.6 TDI	07/12→	77 / 105	Ate		82062900			Luc	82037300			
			Ate		82076800				PRO 92082503	ø 232 x 9 x 39.3		
				PRO	92106603	ø 288 x 25 x 34.4			TPM0008			
					TPM0008							
		651100	Ate		2313001	[–] 23130 19.7	PR 1ZG Ø 256 mm	Luc	2355402	[–] 23554 17.2		
1.6 TDI	08/13→	66 / 90	Ate		2313081	[–] 23130 19.7	PR 1ZG Ø 256 mm	Luc	2355481	[–] 23554 17.2		
			Ate		2358701	[+] 23587 20.3	PR 1ZC Ø 288 mm	Luc	82037300			
			Ate		2358781	[+] 23587 20.3	PR 1ZC Ø 288 mm		91080100	ø 228.4 x 32.5	PR 1KL	
			Ate		82062900				PRO 92082503	ø 232 x 9 x 39.3		
			Ate		82076800		PR 1ZC		TPM0008			
				PRO	92082203	ø 256 x 22 x 36.5	PR 1ZG					
				PRO	92106603	ø 288 x 25 x 34.4	PR 1ZC					
					TPM0008							
RAPID Spaceback (NH1) 07/12→												
		651200	Ate		2313001	[–] 23130 19.7		Luc	2355402	[–] 23554 17.2		
1.2 TSI	07/12→	63 / 86	Ate		2313081	[–] 23130 19.7		Luc	2355481	[–] 23554 17.2		
			Ate		82062900			Luc	82037300			
				PRO	92082203	ø 256 x 22 x 36.5			91080100	ø 228.4 x 32.5	PR 1KL	
					TPM0008				PRO 92082503	ø 232 x 9 x 39.3		
									TPM0008			
		651300	Ate		2358701	[+] 23587 20.3		Luc	2355402	[–] 23554 17.2		
1.2 TSI	07/12→	77 / 105										
1.4 TSI	07/12→	90 / 122	Ate		2358781	[+] 23587 20.3		Luc	2355481	[–] 23554 17.2		
1.6 TDI	07/12→	77 / 105	Ate		82062900			Luc	82037300			
			Ate		82076800				PRO 92082503	ø 232 x 9 x 39.3		
				PRO	92106603	ø 288 x 25 x 34.4			TPM0008			
					TPM0008							
		651400	Ate		2313001	[–] 23130 19.7	PR 1ZG Ø 256 mm	Luc	2355402	[–] 23554 17.2		
1.6 TDI	08/13→	66 / 90										

R - S

30 kW / hp

RAPID Spaceback (NH1) 07/12→

651400													
1.6 TDI	08/13→	66 / 90	Ate	epad	2313081	[–] 23130 19.7	PR 1ZG Ø 256 mm	Luc	epad	2355481	[–] 23554 17.2	
			Ate		2358701	[+] 23587 20.3	PR 1ZC Ø 288 mm	Luc		82037300		
			Ate	epad	2358781	[+] 23587 20.3	PR 1ZC Ø 288 mm			91080100	ø 228.4 x 32.5	PR 1KL
			Ate		82062900				PRO	92082503	ø 232 x 9 x 39.3	
			Ate		82076800		PR 1ZC			TPM0008		
				PRO	92082203	ø 256 x 22 x 36.5	PR 1ZG					
				PRO	92106603	ø 288 x 25 x 34.4	PR 1ZC					
					TPM0008							

ROOMSTER (5J) 03/06→03/10

651500													
1.2	05/06→01/07	47 / 64	Ate		2313101	[+] 23131 19.7		Ate		91052400	ø 230 x 32	
1.2	01/07→	51 / 70	Ate	epad	2313181	[+] 23131 19.7		Ate		97011300		
			Ate		82062900					TPM0008		
				PRO	92082203	ø 256 x 22 x 36.5				94024300	ø 230,0 x 39	
					TPM0008							
651600													
1.2 TDI	03/10→	55 / 75	Ate		2358701	[+] 23587 20.3		Luc		2355402	[–] 23554 17.2	
1.2 TSI	03/10→	77 / 105											
1.6 TDI	03/10→	77 / 105	Ate	epad	2358781	[+] 23587 20.3		Luc	epad	2355481	[–] 23554 17.2	
			Ate		82076800			Luc		82037300		
				PRO	92106603	ø 288 x 25 x 34.4		Luc		82063300		
					TPM0008				PRO	92082503	ø 232 x 9 x 39.3	
										TPM0008		
651700													
1.2 TSI	03/10→	63 / 86	Ate		2313001	[–] 23130 19.7		Ate		91052400	ø 230 x 32	
			Ate	epad	2313081	[–] 23130 19.7		Ate		97011300		
			Ate		82062900					TPM0008		
				PRO	92082203	ø 256 x 22 x 36.5				94024300	ø 230,0 x 39	
					TPM0008							
651800													
1.4	09/06→	63 / 86	Ate		2313101	[+] 23131 19.7		Luc		2355402	[–] 23554 17.2	
			Ate	epad	2313181	[+] 23131 19.7		Luc	epad	2355481	[–] 23554 17.2	
			Ate		82062900			Luc		82037300		
				PRO	92082203	ø 256 x 22 x 36.5		Luc		82063300		
					TPM0008				PRO	92082503	ø 232 x 9 x 39.3	
										TPM0008		
651900													
1.4 TDI	07/06→03/10	51 / 70	Luc		2358102	[+] 23581 19		Ate		91052400	ø 230 x 32	
			Luc		82055400			Ate		97011300		
			Luc		82063500					TPM0008		
				PRO	92106603	ø 288 x 25 x 34.4				94024300	ø 230,0 x 39	
					TPM0008							
652000													
1.4 TDI	09/06→03/10	59 / 80	Luc		2358102	[+] 23581 19		Luc		2355402	[–] 23554 17.2	⊕ rear disc brake
			Luc		82055400			Luc	epad	2355481	[–] 23554 17.2	⊕ rear disc brake
			Luc		82063500			Luc		82037300		
				PRO	92106603	ø 288 x 25 x 34.4		Luc		82063300		

R - S

		kW / hp										
ROOMSTER (5J) 03/06→03/10												
652000												
1.4 TDI	09/06→03/10	59 / 80		TPM0008			Ate	91052400	ø 230 x 32	⊕ rear drum brake
							Ate	97011300		⊕ rear drum brake
								92082503	ø 232 x 9 x 39.3	⊕ rear disc brake
								TPM0008		
								94024300	ø 230,0 x 39	⊕ rear drum brake
652100			Luc	2358102	[+] 23581 19		Luc	2355402	[–] 23554 17.2	
1.6	09/06→	77 / 105	Luc	82055400			Luc	2355481	[–] 23554 17.2	
1.9 TDI	09/06→03/10	77 / 105	Luc	82063500			Luc	82037300		
				92106603	ø 288 x 25 x 34.4		Luc	82063300		
				TPM0008				92082503	ø 232 x 9 x 39.3	
								TPM0008		
652200			Ate	2358701	[+] 23587 20.3		Ate	91052400	ø 230 x 32	
1.6 TDI	03/10→	66 / 90	Ate	2358781	[+] 23587 20.3		Ate	97011300		
			Ate	82076800				TPM0008		
				92106603	ø 288 x 25 x 34.4			94024300	ø 230,0 x 39	
				TPM0008						
652300			Ate	2313001	[–] 23130 19.7	PR 1LQ+9U0,1LR+9U0 PR 1ZG Ø 256 mm	Luc	2355402	[–] 23554 17.2	⊕ rear disc brake
1.9 TDI	03/06→05/06	74 / 101	Ate	2313081	[–] 23130 19.7	PR 1LQ+9U0,1LR+9U0 PR 1ZG Ø 256 mm	Luc	2355481	[–] 23554 17.2	⊕ rear disc brake
			Luc	2358101	[–] 23581 19	PR 1LN+9U0 Ø 288 mm	Luc	82037300		
			Ate	2313101	[+] 23131 19.7	PR 1LR+9U1 Ø 256 mm	Luc	82063300		
			Ate	2313181	[+] 23131 19.7	PR 1LR+9U1 Ø 256 mm	Ate	91052400	ø 230 x 32	⊕ rear drum brake
			Luc	2358102	[+] 23581 19	PR 1LN+9U1 Ø 288 mm	Ate	97011300		⊕ rear drum brake
			Luc	82055400		PR 1LN		92082503	ø 232 x 9 x 39.3	⊕ rear disc brake
			Ate	82062900		PR 1LR,1LQ,1ZG		TPM0008		
			Luc	82063500		PR 1LN		94024300	ø 230,0 x 39	⊕ rear drum brake
				92082203	ø 256 x 22 x 36.5	PR 1LQ,1LR,1ZG				
				92106603	ø 288 x 25 x 34.4	PR 1LN				
				TPM0008						
ROOMSTER Praktik (5J) 03/07→03/10										
652400			Ate	2313101	[+] 23131 19.7		Ate	91052400	ø 230 x 32	
1.2	03/07→	51 / 70	Ate	2313181	[+] 23131 19.7		Ate	97011300		
			Ate	82062900				TPM0008		
				92082203	ø 256 x 22 x 36.5			94024300	ø 230,0 x 39	
				TPM0008						
652500			Ate	2358701	[+] 23587 20.3		Luc	2355402	[–] 23554 17.2	
1.2 TDI	03/10→	55 / 75	Ate	2358781	[+] 23587 20.3		Luc	2355481	[–] 23554 17.2	
			Ate	82076800			Luc	82037300		
				92106603	ø 288 x 25 x 34.4		Luc	82063300		
				TPM0008				92082503	ø 232 x 9 x 39.3	
								TPM0008		

kW / hp

ROOMSTER Praktik (5J) 03/07→03/10

1.2 TSI	03/10→	652600 63 / 86	Ate		2313001	[–] 23130 19.7		Ate		91052400	ø 230 x 32	
			Ate	epad	2313081	[–] 23130 19.7		Ate		97011300		
			Ate		82062900					TPM0008		
				PRO	92082203	ø 256 x 22 x 36.5				94024300	ø 230,0 x 39	
					TPM0008							
1.4	03/07→	652700 63 / 86	Ate		2313101	[+] 23131 19.7		Luc		2355402	[–] 23554 17.2	
			Ate	epad	2313181	[+] 23131 19.7		Luc	epad	2355481	[–] 23554 17.2	
			Ate		82062900			Luc		82037300		
				PRO	92082203	ø 256 x 22 x 36.5		Luc		82063300		
					TPM0008				PRO	92082503	ø 232 x 9 x 39.3	
										TPM0008		
1.4 TDI	03/07→03/10	652800 51 / 70	Luc		2358102	[+] 23581 19		Ate		91052400	ø 230 x 32	
			Luc		82055400			Ate		97011300		
			Luc		82063500					TPM0008		
				PRO	92106603	ø 288 x 25 x 34.4				94024300	ø 230,0 x 39	
					TPM0008							
1.4 TDI	03/07→03/10	652900 59 / 80	Luc		2358102	[+] 23581 19		Luc		2355402	[–] 23554 17.2	⊕ rear disc brake
			Luc		82055400			Luc	epad	2355481	[–] 23554 17.2	⊕ rear disc brake
			Luc		82063500			Luc		82037300		
				PRO	92106603	ø 288 x 25 x 34.4		Luc		82063300		
					TPM0008			Ate		91052400	ø 230 x 32	⊕ rear drum brake
								Ate		97011300		⊕ rear drum brake
									PRO	92082503	ø 232 x 9 x 39.3	⊕ rear disc brake
										TPM0008		
										94024300	ø 230,0 x 39	⊕ rear drum brake
1.6 TDI	03/10→	653000 66 / 90	Ate		2358701	[+] 23587 20.3		Ate		91052400	ø 230 x 32	
			Ate	epad	2358781	[+] 23587 20.3		Ate		97011300		
			Ate		82076800					TPM0008		
				PRO	92106603	ø 288 x 25 x 34.4				94024300	ø 230,0 x 39	
					TPM0008							

SUPERB (3T4) 03/08→

1.4 TSI	07/08→	653100 92 / 125	Ate		2358701	[+] 23587 20.3		Bos		2456301	[–] 24563 17.7	PR 1KS Ø 272 mm
			Ate	epad	2358781	[+] 23587 20.3		Luc		2391401	[o] 23914 17.2	PR 1KJ Ø 286 mm
			Ate		82062900			Luc	epad	2391481	[o] 23914 17.2	PR 1KJ Ø 286 mm
			Ate		82076800			Bos		82054300		PR 1KS Ø 272 mm
				PRO	92120503	ø 312 x 25 x 49.7		Luc		82509000		PR 1KJ Ø 286 mm
					TPM0008			Luc		82062800		
									PRO	92140803	ø 282 x 12 x 48.5	PR 1KJ
									PRO	92224903	ø 272 x 10 x 48.3	PR 1KS
										TPM0008		

R - S

kW / hp

SUPERB (3T4) 03/08→

		653200	Ate	2358701	[+] 23587 20.3		Bos	2456301	[–] 24563 17.7	
1.6 TDI	09/10→	77 / 105	Ate	2358781	[+] 23587 20.3		Bos	82054300		
			Ate	82062900			Luc	82062800		
			Ate	82076800				92224903	ø 272 x 10 x 48.3	
				92120503	ø 312 x 25 x 49.7			TPM0008		
				TPM0008						
		653300	Ate	2358701	[+] 23587 20.3		Luc	2391401	[o] 23914 17.2	
1.8 TSI	03/08→	118 / 160								
1.8 TSI	03/09→	112 / 152								
1.8 TSI 4x4	11/08→	118 / 160	Ate	2358781	[+] 23587 20.3		Luc	2391481	[o] 23914 17.2	
1.8 TSI 4x4	03/09→	112 / 152								
2.0 TDI	03/08→	103 / 140	Ate	82062900			Luc	82509000		
2.0 TDI	07/08→	125 / 170								
2.0 TDI 16V	01/09→	103 / 140								
2.0 TDI 16V 4x4	11/10→	103 / 140	Ate	82076800			Luc	82062800		
2.0 TDI 4x4	09/08→	125 / 170								
2.0 TSI	05/10→	147 / 200		92120503	ø 312 x 25 x 49.7			92140803	ø 282 x 12 x 48.5	
				TPM0008				TPM0008		
		653400	Ate	2358701	[+] 23587 20.3		Bos	2456301	[–] 24563 17.7	PR 1KS Ø 272 mm
1.9 TDI	03/08→	77 / 105	Ate	2358781	[+] 23587 20.3		Luc	2391401	[o] 23914 17.2	PR 1KF Ø 256 mm
			Ate	82062900			Luc	2391481	[o] 23914 17.2	PR 1KF Ø 256 mm
			Ate	82076800			Bos	82054300		PR 1KS Ø 272 mm
				92120803	ø 288 x 25 x 49.8		Luc	82509000		PR 1KF Ø 256 mm
				92120805	ø 288 x 25 x 49.8		Luc	82062800		
				TPM0008				92121103	ø 256 x 12 x 48.4	PR 1KF
								92224903	ø 272 x 10 x 48.3	PR 1KS
								TPM0008		
		653500	Ate	2380101	[+] 23801 20.3		Luc	2391402	[o] 23914 17.2	
3.6 FSI 4x4	04/09→	191 / 260								
3.6 V6 4x4	11/08→	191 / 260	Ate	2380181	[+] 23801 20.3		Luc	2391482	[o] 23914 17.2	
			Ate	82062900			Luc	82502000		
			Ate	82071800			Luc	82062800		
				92120603	ø 345 x 30 x 49.9			92140703	ø 310 x 22 x 48.5	
				TPM0008				TPM0008		

SUPERB (3U4) 12/01→03/08

		653600	Ate	2301802	[+] 23018 20.4		Luc	2355402	[–] 23554 17.2	
1.8 T	12/01→03/08	110 / 150								
1.9 TDI	12/01→03/08	96 / 130	Ate	2301881	[+] 23018 20.4		Luc	2355481	[–] 23554 17.2	
1.9 TDI	08/02→10/05	74 / 101								
1.9 TDI	10/05→05/07	77 / 105								
1.9 TDI	01/07→03/08	85 / 115	Ate	82029300			Luc	82037300		
2.0	12/01→03/08	85 / 115								
2.0	02/06→03/08	91 / 124	Ate	82062900			Luc	82062800		
2.0 TDI	10/05→03/08	103 / 140								
				92120803	ø 288 x 25 x 49.8	2005-05-30→		92057503	ø 245 x 10 x 63.9	
				92120805	ø 288 x 25 x 49.8	2005-05-30→				
				92121003	ø 288 x 25 x 46.5	→2005-05-29				
		653700	Ate	2301802	[+] 23018 20.4		Luc	2355402	[–] 23554 17.2	
2.5 TDI	12/01→08/03	114 / 155								
2.5 TDI	06/03→03/08	120 / 163	Ate	2301881	[+] 23018 20.4		Luc	2355481	[–] 23554 17.2	
2.8 V6	12/01→03/08	142 / 193								
2.8 V6	06/02→03/08	140 / 190	Ate	82029300			Luc	82037300		
			Ate	82062900			Luc	82062800		
				92106103	ø 312 x 25 x 46.4	→2005-05-29		92057503	ø 245 x 10 x 63.9	

		kW / hp											
SUPERB (3U4) 12/01→03/08													
		653700											
2.5 TDI	12/01→08/03	114 / 155		PRO	92106105	ø 312 x 25 x 46.4	→2005-05-29						
2.5 TDI	06/03→03/08	120 / 163		PRO	92120503	ø 312 x 25 x 49.7	2005-05-30→						
2.8 V6	12/01→03/08	142 / 193											
2.8 V6	06/02→03/08	140 / 190											
SUPERB Estate (3T5) 10/09→11/10													
		653800	Ate		2358701	[+] 23587 20.3		Bos		2456301	[–] 24563 17.7	PR 1KS Ø 272 mm	
1.4 TSI	10/09→	92 / 125											
1.6 TDI	09/10→	77 / 105	Ate	epad	2358781	[+] 23587 20.3		Luc	epad	2391401	[o] 23914 17.2	PR 1KJ Ø 286 mm	
1.8 TSI	10/09→	112 / 152											
1.8 TSI	10/09→	118 / 160	Ate		82062900			Luc	epad	2391481	[o] 23914 17.2	PR 1KJ Ø 286 mm	
2.0 TDI	10/09→	125 / 170											
2.0 TDI	10/09→03/10	103 / 140	Ate		82076800			Bos		82054300		PR 1KS Ø 272 mm	
2.0 TDI 16V	10/09→	103 / 140		PRO	92120503	ø 312 x 25 x 49.7		Luc		82509000		PR 1KJ Ø 286 mm	
2.0 TSI	05/10→	147 / 200			TPM0008			Luc		82062800			
									PRO	92140803	ø 282 x 12 x 48.5	PR 1KJ	
									PRO	92224903	ø 272 x 10 x 48.3	PR 1KS	
										TPM0008			
		653900	Ate		2358701	[+] 23587 20.3		Luc		2391402	[o] 23914 17.2		
1.8 TSI 4x4	10/09→	112 / 152											
1.8 TSI 4x4	10/09→	118 / 160	Ate	epad	2358781	[+] 23587 20.3		Luc	epad	2391482	[o] 23914 17.2		
2.0 TDI 16V 4x4	11/10→	103 / 140											
2.0 TDI 4x4	10/09→	125 / 170	Ate		82062900			Luc		82502000			
			Ate		82076800			Luc		82062800			
				PRO	92120503	ø 312 x 25 x 49.7			PRO	92140703	ø 310 x 22 x 48.5		
					TPM0008					TPM0008			
		654000	Ate		2358701	[+] 23587 20.3		Bos		2456301	[–] 24563 17.7	PR 1KS Ø 272 mm	
1.9 TDI	10/09→11/10	77 / 105											
			Ate	epad	2358781	[+] 23587 20.3		Luc	epad	2391401	[o] 23914 17.2	PR 1KF Ø 256 mm	
			Ate		82062900			Luc	epad	2391481	[o] 23914 17.2	PR 1KF Ø 256 mm	
			Ate		82076800			Bos		82054300		PR 1KS Ø 272 mm	
				PRO	92120803	ø 288 x 25 x 49.8		Luc		82509000		PR 1KF Ø 256 mm	
				PRO	92120805	ø 288 x 25 x 49.8		Luc		82062800			
					TPM0008				PRO	92121103	ø 256 x 12 x 48.4	PR 1KF	
									PRO	92224903	ø 272 x 10 x 48.3	PR 1KS	
										TPM0008			
		654100	Ate		2380101	[+] 23801 20.3		Luc		2391402	[o] 23914 17.2		
3.6 V6 4x4	10/09→	191 / 260											
			Ate	epad	2380181	[+] 23801 20.3		Luc	epad	2391482	[o] 23914 17.2		
			Ate		82062900			Luc		82502000			
			Ate		82071800			Luc		82062800			
				PRO	92120603	ø 345 x 30 x 49.9			PRO	92140703	ø 310 x 22 x 48.5		
					TPM0008					TPM0008			
SUPERB Kombi (3T5) 10/09→11/10 → SUPERB Estate (3T5), Page 1069													
SUPERB Saloon (3U4) 12/01→03/08 → SUPERB (3U4), Page 1068													
SUPERB Stufenheck (3U4) 12/01→03/08 → SUPERB (3U4), Page 1068													
YETI (5L) 05/09→													
		654200	Ate		2313101	[+] 23131 19.7		Luc		2355402	[–] 23554 17.2		
1.2 TSI	09/09→	77 / 105											
1.4 TSI	06/10→	90 / 122	Ate	epad	2313181	[+] 23131 19.7		Luc	epad	2355481	[–] 23554 17.2		
1.6 TDI	11/10→	77 / 105											
2.0 TDI	11/09→	81 / 110		PRO	92120703	ø 280 x 22 x 49.9		Luc		82037300			
				PRO	92120705	ø 280 x 22 x 49.9			PRO	92120903	ø 255 x 10 x 51.6		

		kW / hp											
YETI (5L) 05/09→													
		654200			TPM0008					TPM0008			
1.2 TSI	09/09→	77 / 105											
1.4 TSI	06/10→	90 / 122											
1.6 TDI	11/10→	77 / 105											
2.0 TDI	11/09→	81 / 110											
		654300	Ate		2358701	[+] 23587 20.3		Bos		2456301	[–] 24563 17.7	2009-11-02→	
1.8 TSI 4x4	05/09→	118 / 160											
2.0 TDI 4x4	05/09→	103 / 140	Ate	epad	2358781	[+] 23587 20.3		Luc		2391401	[o] 23914 17.2	→2009-11-01	
			Ate		82076800			Luc	epad	2391481	[o] 23914 17.2	→2009-11-01	
				PRO	92120803	ø 288 x 25 x 49.8		Bos		82054300		2009-11-02→	
				PRO	92120805	ø 288 x 25 x 49.8		Luc		82509000		→2009-11-01	
					TPM0008				PRO	92140803	ø 282 x 12 x 48.5	→2009-11-01	
									PRO	92224903	ø 272 x 10 x 48.3	2009-11-02→	
										TPM0008			
		654400	Ate		2358701	[+] 23587 20.3		Bos		2456301	[–] 24563 17.7		
1.8 TSI 4x4	11/09→	112 / 152											
2.0 TDI	11/11→	103 / 140	Ate	epad	2358781	[+] 23587 20.3		Bos		82054300			
			Ate		82076800				PRO	92224903	ø 272 x 10 x 48.3		
				PRO	92120803	ø 288 x 25 x 49.8				TPM0008			
				PRO	92120805	ø 288 x 25 x 49.8							
					TPM0008								
		654500	Ate		2313101	[+] 23131 19.7		Bos		2456301	[–] 24563 17.7		
2.0 TDI 4x4	11/09→	81 / 110											
			Ate	epad	2313181	[+] 23131 19.7		Bos		82054300			
				PRO	92120703	ø 280 x 22 x 49.9			PRO	92224903	ø 272 x 10 x 48.3		
				PRO	92120705	ø 280 x 22 x 49.9				TPM0008			
					TPM0008								
		654600	Ate		2358701	[+] 23587 20.3		Bos		2456301	[–] 24563 17.7		
2.0 TDI 4x4	11/09→	125 / 170											
			Ate	epad	2358781	[+] 23587 20.3		Bos		82054300			
			Ate		82076800				PRO	92224903	ø 272 x 10 x 48.3		
				PRO	92120503	ø 312 x 25 x 49.7				TPM0008			
					TPM0008								

		kW / hp											
CABRIO (450) 03/00→01/04													
		654700	Bos		2199901	[+] 21999 15.8				91057400	ø 203.2 x 32		
0.6 (450.400, S10LD2)	01/01→01/04	45 / 61		PRO	92097603	ø 280 x 9 x 38				97015400			
0.6 (450.432)	06/02→01/04	52 / 71											
0.6 (450.433, S10LA1)	03/00→01/04	40 / 55								84057401	bore ø 22.2 ø 203.2 x 32		
0.7	01/01→01/03	40 / 54											
0.7 (450.400)	01/03→01/04	45 / 61								94022400	ø 203,0 x 39		
0.7 (450.414)	01/03→01/04	55 / 75											
0.8 CDI (450.401, 450.402, 450.403, S10LC1)	03/01→01/04	30 / 41											
CITY-COUPE (450) 07/98→01/04													
		654800	Bos		2199901	[+] 21999 15.8				91057400	ø 203.2 x 32		
0.6 (450.330, 450.332)	06/02→01/04	52 / 71											
0.6 (450.333, 450.335)	01/01→01/04	45 / 61		PRO	92097603	ø 280 x 9 x 38				97015400			
0.7	07/98→01/04	33 / 45											
0.7 (450.314)	01/03→01/04	55 / 75								84057401	bore ø 22.2 ø 203.2 x 32		
0.7 (450.336, 450.352, 450.353)	01/03→01/04	45 / 61											
0.7 (450.347)	01/03→01/04	37 / 50								94022400	ø 203,0 x 39		
0.8 CDI (450.300, 450.301, 450.302, 450.303, 450.306...)	11/99→01/04	30 / 41											
		654900	Bos		2199901	[+] 21999 15.8				91057400	ø 203.2 x 32		
0.6 (450.341, S1CLA1)	07/98→01/04	40 / 55											
0.6 (450.342, S1CLB1)	07/98→01/04	33 / 45											

		kW / hp											
CITY-COUPE (450) 07/98→01/04													
		654900											
0.6 (450.341, S1CLA1)	07/98→01/04	40 / 55		PRO	92097603	ø 280 x 9 x 38				97015400		
0.6 (450.342, S1CLB1)	07/98→01/04	33 / 45								84057400	bore ø 17.5 ø 203.2 x 32	
										94022400	ø 203,0 x 39	
CROSSBLADE (450) 06/02→12/03													
		655000	Bos		2199901	[+] 21999 15.8				91057400	ø 203.2 x 32	
0.6 (450.418)	06/02→12/03	52 / 71		PRO	92097603	ø 280 x 9 x 38				97015400		
										84057400	bore ø 17.5 ø 203.2 x 32	
										94022400	ø 203,0 x 39	
FORFOUR (454) 01/04→06/06													
		655100	Luc		2192003	[+] 21920 17.4		Luc		2354901	[+] 23549 16.8	⊕ rear disc brake
1.1 (454.030)	01/04→06/06	55 / 75										
1.1 (454.033)	02/05→06/06	47 / 64	Luc		82058900			Luc		82058900		
1.3 (454.031)	01/04→06/06	70 / 95										
1.5 CDI (454.000)	09/04→06/06	50 / 68	Luc		82063500			Luc		82063300		
				PRO	92134803	ø 256 x 24 x 45.6				91068800	ø 203 x 38	⊕ rear drum brake
										97037400		⊕ rear drum brake
								Luc		84068800	bore ø 19 ø 203 x 38	
									PRO	92134903	ø 250 x 10 x 38.4	⊕ rear disc brake
		655200	Luc		2192003	[+] 21920 17.4		Luc		2354901	[+] 23549 16.8	
1.5 (454.032)	01/04→06/06	80 / 109										
1.5 (454.032)	01/04→06/06	90 / 122	Luc		82058900			Luc		82058900		
1.5 CDI (454.001)	09/04→06/06	70 / 95										
			Luc		82063500			Luc		82063300		
				PRO	92134803	ø 256 x 24 x 45.6			PRO	92134903	ø 250 x 10 x 38.4	
		655300	Luc		2198304	[+] 21983 16.5		Luc		2354901	[+] 23549 16.8	
1.5 BRABUS (454.034)	05/05→06/06	130 / 177										
			Luc		82058900			Luc		82058900		
			Luc		82063500			Luc		82063300		
					92204400	ø 281 x 26 x 46.5			PRO	92134903	ø 250 x 10 x 38.4	
FORTWO Cabrio (450) 01/04→01/07													
		655400	Bos		2199901	[+] 21999 15.8				91057400	ø 203.2 x 32	
0.6 Brabus (450.433, 450.432)	01/04→12/06	55 / 75		PRO	92155503	ø 280 x 9.7 x 38				94022400	ø 203,0 x 39	
		655500	Bos		2199901	[+] 21999 15.8				91057400	ø 203.2 x 32	
0.7 (450.414, 450.441, 450.442, 450.443, 450.452)	01/04→01/07	45 / 61		PRO	92097603	ø 280 x 9 x 38				97015400		
0.7 (450.452)	01/04→01/07	55 / 75										
0.8 CDI (450.401, 450.402, 450.403)	01/04→01/07	30 / 41								94022400	ø 203,0 x 39	
		655600	Bos		2199901	[+] 21999 15.8				97031800		
0.8 D	09/04→01/07	33 / 45		PRO	92155503	ø 280 x 9.7 x 38				94035600	ø 203,0 x 40	
FORTWO Cabrio (451) 01/07→													
		655700	Bos		2199901	[+] 21999 15.8				91066600	ø 203.2 x 32	
0.8 CDi (451.400)	01/07→	33 / 45										
0.8 CDi (451.401)	08/09→	40 / 54		PRO	92155503	ø 280 x 9.7 x 38				97031800		
1.0 (451.431, 451.480)	01/07→	52 / 71										
1.0 Brabus	04/12→	88 / 120										
1.0 Brabus (451.433)	01/08→	72 / 98								84066600	bore ø 20.6 ø 203.2 x 32	
1.0 Turbo (451.432)	01/07→	62 / 84										
1.0 Turbo Brabus (451.433)	07/10→	75 / 102										
electric drive	12/11→12/12	35 / 48								94035600	ø 203,0 x 40	
electric drive	01/13→	55 / 75										
electric drive (451.490, 451.491)	12/10→12/12	20 / 27										
electric drive (451.491)	11/09→12/11	30 / 41										
electric drive Brabus	01/13→	60 / 82										
		655800	Bos		2199901	[+] 21999 15.8	→2013-04			97031800		
Electric	09/11→	22 / 30		PRO	92155503	ø 280 x 9.7 x 38				94035600	ø 203,0 x 40	

		kW / hp										
FORTWO Coupe (450) 01/04→02/07												
		655900	Bos		**2199901**	[+] 21999 15.8				**91057400**	ø 203.2 x 32	
0.6 (450.330)	01/04→02/07	45 / 61		PRO	**92155503**	ø 280 x 9.7 x 38				**94022400**	ø 203,0 x 39	
		656000	Bos		**2199901**	[+] 21999 15.8				**97031800**		
0.7	09/04→12/06	34 / 45										
0.8 D	09/04→12/06	33 / 45		PRO	**92155503**	ø 280 x 9.7 x 38				**94035600**	ø 203,0 x 40	
		656100	Bos		**2199901**	[+] 21999 15.8				**91057400**	ø 203.2 x 32	
0.7 (450.314)	01/04→01/07	55 / 75										
0.7 (450.331)	01/04→01/07	37 / 50										
0.7 (450.335, 450.336, 450.341, 450.342, 450.343...)	01/04→01/07	45 / 61		PRO	**92097603**	ø 280 x 9 x 38				**97015400**		
0.8 CDI (450.300, 450.301, 450.302, 450.303, 450.306)	01/04→01/07	30 / 41								**94022400**	ø 203,0 x 39	
FORTWO Coupe (451) 01/07→12/12												
		656200	Bos		**2199901**	[+] 21999 15.8				**91066600**	ø 203.2 x 32	
0.8 CDi (451.300)	01/07→	33 / 45										
0.8 CDi (451.301)	08/09→	40 / 54										
1.0	01/10→	88 / 120		PRO	**92155503**	ø 280 x 9.7 x 38				**97031800**		
1.0 (451.330, 451.334)	01/07→	45 / 61										
1.0 (451.331, 451.380)	01/07→	52 / 71								**84066600**	bore ø 20.6 ø 203.2 x 32	
1.0 Brabus (451.333)	01/08→	72 / 98										
1.0 Turbo (451.332)	01/07→	62 / 84										
1.0 Turbo Brabus (451.333)	07/10→	75 / 102								**94035600**	ø 203,0 x 40	
electric drive	12/11→12/12	35 / 48										
electric drive	01/13→	55 / 75										
electric drive (451.390, 451.391)	12/10→12/12	20 / 27										
electric drive (451.391)	11/09→12/11	30 / 41										
electric drive Brabus	01/13→	60 / 82										
		656300	Bos		**2199901**	[+] 21999 15.8				**97031800**		
electric drive	09/11→12/12	22 / 30		PRO	**92155503**	ø 280 x 9.7 x 38				**94035600**	ø 203,0 x 40	
ROADSTER (452) 04/03→11/05												
		656400	Bos		**2199901**	[+] 21999 15.8				**91057400**	ø 203.2 x 32	
0.7 (452.432)	04/03→11/05	45 / 61										
0.7 (452.434)	04/03→11/05	60 / 82										
0.7 Brabus (452.437)	12/03→11/05	74 / 101		PRO	**92097603**	ø 280 x 9 x 38				**97015400**		
										84057401	bore ø 22.2 ø 203.2 x 32	
										94022400	ø 203,0 x 39	
ROADSTER Coupe (452) 04/03→11/05												
		656500	Bos		**2199901**	[+] 21999 15.8				**91057400**	ø 203.2 x 32	
0.7 (452.332)	06/03→11/05	45 / 61										
				PRO	**92097603**	ø 280 x 9 x 38				**97015400**		
										94022400	ø 203,0 x 39	
		656600	Bos		**2199901**	[+] 21999 15.8				**91057400**	ø 203.2 x 32	
0.7 (452.334)	04/03→11/05	60 / 82										
0.7 Brabus (452.337)	12/03→11/05	74 / 101		PRO	**92097603**	ø 280 x 9 x 38				**97015400**		
										84057401	bore ø 22.2 ø 203.2 x 32	
										94022400	ø 203,0 x 39	

		kW / hp										
ACTYON I 11/05→												
		656700	Man		**2356901**	[+] 23569 17		San		**2367301**	[+] 23673 15	⊕ ABS
2.0 Xdi	11/05→	104 / 141										
2.0 Xdi	07/07→	100 / 136										
2.3	11/06→	110 / 150	Man		**82072100**			Luc		**91015700**	ø 254 x 56	⊖ ABS
2.3 4x4	11/06→	110 / 150										
200 Xdi 4WD	10/06→	104 / 141		PRO	**92203203**	ø 294 x 28 x 56.5	⊕ ABS		PRO	**92198703**	ø 299 x 10 x 68	⊕ ABS
200 Xdi 4WD	07/07→	100 / 136								**94022500**	ø 203,0 x 44	⊖ ABS
										91077600	ø 190 x 25	⊕ ABS
ACTYON SPORTS I (QJ) 04/07→												
		656800	Man		**2435101**	[+] 24351 17.6		Ake		**2493401**	[+] 24934 15.5	
2.0 Xdi	09/11→	114 / 155										
2.0 Xdi 4WD	09/11→	114 / 155										
		656900	Man		**2356901**	[+] 23569 17		San		**2367301**	[+] 23673 15	⊕ ABS
2.0 Xdi 4WD	04/07→	104 / 141										

		kW / hp										
ACTYON SPORTS I (QJ) 04/07→												
656900			Man		82072100			Luc		91015700	ø 254 x 56	⊖ ABS
2.0 Xdi 4WD	04/07→	104 / 141		PRO	92203203	ø 294 x 28 x 56.5	⊕ ABS		PRO	92198703	ø 299 x 10 x 68	⊕ ABS
										94022500	ø 203,0 x 44	⊖ ABS
										91077600	ø 190 x 25	⊕ ABS
ACTYON SPORTS II 10/12→												
657000					TPM0001			San		2367301	[+] 23673 15	⊕ rear disc brake
2.0 Xdi	10/12→	114 / 155						Luc		91015700	ø 254 x 56	⊕ rear drum brake
2.0 Xdi 4WD	10/12→	114 / 155								83015702	bore ø 25.4 ø 254 x 56	⊕ rear drum brake
									PRO	92198703	ø 299 x 10 x 68	⊕ rear disc brake
										91077600	ø 190 x 25	⊕ rear disc brake
ISTANA Box 06/95→												
657100			Ben		2157302	[–] 21573 14				91044300	ø 254 x 57	
2.9 D	06/95→	90 / 122			92038900	ø 238.5 x 16 x 79		Luc		97009000		
					92087300	ø 263 x 24 x 82				94011600	ø 254,0 x 65	
ISTANA Bus 06/95→												
657200			Ben		2157302	[–] 21573 14				91044300	ø 254 x 57	
2.3	06/95→	110 / 150										
2.9 D	06/95→	90 / 122			92038900	ø 238.5 x 16 x 79		Luc		97009000		
					92087300	ø 263 x 24 x 82				94011600	ø 254,0 x 65	
ISTANA Kasten 06/95→ → ISTANA Box, Page 1073												
KORANDO (KJ) 12/96→												
657300			Luc		2323101	[+] 23231 15.8	⊕ W.I. mech.	Luc		2323701	[–] 23237 14.5	
2.0	05/97→	94 / 128										
2.3	05/97→	103 / 140										
2.3	01/99→	105 / 143	Luc		2323001	[+] 23230 15.8	⊕ W.I. elec.	Luc		2324201	[+] 23242 14.2	
2.3	01/02→	110 / 150										
2.3 D (KJ)	12/96→	58 / 79			92138400	ø 278 x 24 x 41				92138500	ø 299 x 10.5 x 67.5	
2.3 TDiC	07/98→	74 / 101										
2.9 D	06/97→10/00	73 / 99										
2.9 D (KJ)	12/96→	72 / 98										
2.9 TD	04/98→	88 / 120										
3.2	06/97→	162 / 220										
3.2	01/99→	156 / 212										
3.2 (KJ)	12/96→	154 / 209										
KORANDO 11/10→												
657400			Man		2435101	[+] 24351 17.6		Ake		2493401	[+] 24934 15.5	
2.0	02/12→	110 / 150										
2.0 e-XDi	11/10→	129 / 175										
2.0 e-XDi	02/12→	110 / 150										
2.0 e-XDi 4WD	11/10→	129 / 175										
2.0 e-XDi 4WD	02/12→	110 / 150										
657500			Man		2435101	[+] 24351 17.6						
2.0 4WD	02/12→	110 / 150										
KORANDO Cabrio (KJ) 06/97→												
657600			Luc		2323101	[+] 23231 15.8	⊕ W.I. mech.	Luc		2323701	[–] 23237 14.5	
2.3	11/97→	103 / 140										
2.3	02/99→	105 / 143										
2.3	01/02→	110 / 150	Luc		2323001	[+] 23230 15.8	⊕ W.I. elec.	Luc		2324201	[+] 23242 14.2	
2.9 D	11/97→	72 / 98										
2.9 TD	04/98→	88 / 120										
3.2	06/97→	162 / 220			92138400	ø 278 x 24 x 41				92138500	ø 299 x 10.5 x 67.5	
3.2	01/99→	156 / 212										
3.2 4x4	06/97→11/02	154 / 209										
KYRON 05/05→												
657700			Man		2356901	[+] 23569 17		San		2367301	[+] 23673 15	⊕ rear disc brake
2.0 Xdi	05/05→	104 / 141										
2.3	01/10→	110 / 150		PRO	92203203	ø 294 x 28 x 56.5	⊕ ABS →09/12	Luc		91015700	ø 254 x 56	⊕ rear drum brake
					TPM0001					83015702	bore ø 25.4 ø 254 x 56	⊕ rear drum brake
									PRO	92198703	ø 299 x 10 x 68	⊕ rear disc brake
										TPM0001		⊕ rear disc brake
										91077600	ø 190 x 25	⊕ rear disc brake
657800			Man		2356901	[+] 23569 17		San		2367301	[+] 23673 15	⊖ multi link axle ⊕ rear disc brake
2.0 Xdi	01/10→	100 / 136										
2.0 Xdi 4x4	05/05→	104 / 141										

		kW / hp											
KYRON 05/05→													
2.0 Xdi 4x4	01/10→	100 / 136		PRO	92203203	ø 294 x 28 x 56.5	⊕ ABS →09/12	Man		2393101	[+] 23931 15	multi link axle ⊕ rear disc brake
					TPM0001			Luc		91015700	ø 254 x 56	⊕ rear drum brake
										83015702	bore ø 25.4 ø 254 x 56	⊕ rear drum brake
									PRO	92198703	ø 299 x 10 x 68	⊕ rear disc brake
										TPM0001		⊕ rear disc brake
										91077600	ø 190 x 25	⊕ rear disc brake
		657900	Man		2356901	[+] 23569 17		San		2367301	[+] 23673 15	⊕ ABS ⊕ man. ⊕ rear disc brake
2.7 Xdi	05/05→	121 / 165										
2.7 Xdi	03/06→	120 / 163	Man		82072100			Man		2393101	[+] 23931 15	⊕ ABS ⊕ autom. ⊕ rear disc brake
				PRO	92203203	ø 294 x 28 x 56.5	⊕ ABS →09/12	Luc		91015700	ø 254 x 56	⊕ rear drum brake
					TPM0001					83015702	bore ø 25.4 ø 254 x 56	⊕ rear drum brake
									PRO	92198703	ø 299 x 10 x 68	⊖ multi link axle ⊕ rear disc brake
										TPM0001		⊕ rear disc brake
										91077600	ø 190 x 25	⊕ rear disc brake
		658000	Man		2356901	[+] 23569 17		Man		2393101	[+] 23931 15	
3.2 M320 4WD	03/08→	162 / 220		PRO	92203203	ø 294 x 28 x 56.5	⊕ ABS →09/12			TPM0001		
					TPM0001							
MUSSO (FJ) 10/95→												
		658100	Sum		2172502	[+] 21725 15.6	Sumitomo	Luc		2323701	[–] 23237 14.5	Lucas
2.0	10/96→	93 / 126										
2.3	10/96→	103 / 140										
2.3	04/03→	110 / 150	Luc		2323101	[+] 23231 15.8	⊕ W.I. mech. Lucas	Luc		2324201	[+] 23242 14.2	Lucas
2.3 D	10/95→	59 / 80										
2.3 TDiC All-wheel Drive	05/97→10/03	74 / 101	Luc		2323001	[+] 23230 15.8	⊕ W.I. elec. Lucas	Ake		2405001	[+] 24050 15.2	Akebono
2.9 D	03/96→	73 / 99										
2.9 TD	04/98→	88 / 120										
2.9 TD	04/98→	108 / 147										
3.2	06/96→	162 / 220			92138400	ø 278 x 24 x 41				92138500	ø 299 x 10.5 x 67.5	
MUSSO SPORTS 08/04→												
		658200	Luc		2323101	[+] 23231 15.8	⊕ W.I. mech.	Luc		2323701	[–] 23237 14.5	
2.9 D	08/04→09/07	88 / 120										
2.9 D 4x4	08/04→	88 / 120	Luc		2323001	[+] 23230 15.8	⊕ W.I. elec.	Luc		2324201	[+] 23242 14.2	
					92138400	ø 278 x 24 x 41				92138500	ø 299 x 10.5 x 67.5	
MUSSO SPORTS Pickup 08/04→ → MUSSO SPORTS, Page 1074												
MUSSO SPORTS Pick-up 08/04→ → MUSSO SPORTS, Page 1074												
REXTON (GAB_) 04/02→												
		658300	Sum		2172502	[+] 21725 15.6	cal. (1 pist.)	Luc		2324201	[+] 23242 14.2	
2.3 RX230 4x4	05/02→	110 / 150	Man		2356901	[+] 23569 17	cal. (2 pist.)	San		2367301	[+] 23673 15	
			Man		82072100			Luc		91015700	ø 254 x 56	⊖ ABS
					92162600	ø 294 x 26 x 32.6	⊕ ABS 01/04→			92138500	ø 299 x 10.5 x 67.5	
				PRO	92203203	ø 294 x 28 x 56.5	⊕ ABS →12/03					
				PRO	92229003	ø 294 x 26 x 55.3	⊖ ABS 01/04→					
		658400	Sum		2172502	[+] 21725 15.6	cal. (1 pist.)	Luc		2324201	[+] 23242 14.2	
2.7 D 4x4	05/06→	137 / 186										
2.7 Xdi	08/04→	120 / 163	Man		2356901	[+] 23569 17	cal. (2 pist.)	San		2367301	[+] 23673 15	
2.7 Xdi	03/05→08/06	121 / 165										
2.7 Xdi 4x4	03/11→	118 / 160										
2.7 Xdi Turbo 4x4	03/11→	132 / 180	Man		82072100			Luc		91015700	ø 254 x 56	⊖ ABS
					92162600	ø 294 x 26 x 32.6	⊖ ABS			92138500	ø 299 x 10.5 x 67.5	
										91077600	ø 190 x 25	
		658500	Sum		2172502	[+] 21725 15.6	cal. (1 pist.)	Luc		2324201	[+] 23242 14.2	
2.8 RX280 4x4	03/03→	142 / 193	Man		2356901	[+] 23569 17	cal. (2 pist.)	San		2367301	[+] 23673 15	

		kW / hp									
REXTON (GAB_) 04/02→											
658500			Man		82072100					92138500	ø 299 x 10.5 x 67.5	
2.8 RX280 4x4	03/03→	142 / 193										
658600			Sum		2172502	[+] 21725 15.6	cal. (1 pist.)	Luc		2324201	[+] 23242 14.2	
2.9 TD	04/02→	88 / 120	Man		2356901	[+] 23569 17	cal. (2 pist.)	San		2367301	[+] 23673 15	
			Man		82072100			Luc		91015700	ø 254 x 56	⊖ ABS
					92138400	ø 278 x 24 x 41				92138500	ø 299 x 10.5 x 67.5	
					92162600	ø 294 x 26 x 32.6	⊕ ABS 01/04→					
				PRO	92203203	ø 294 x 28 x 56.5	⊕ ABS →12/03					
				PRO	92229003	ø 294 x 26 x 55.3	⊖ ABS 01/04→					
658700			Sum		2172502	[+] 21725 15.6	cal. (1 pist.)	Luc		2324201	[+] 23242 14.2	
3.2	04/02→	162 / 220	Man		2356901	[+] 23569 17	cal. (2 pist.)	San		2367301	[+] 23673 15	
			Man		82072100			Luc		91015700	ø 254 x 56	⊕ ABS
					92162600	ø 294 x 26 x 32.6	⊕ ABS 01/04→			92138500	ø 299 x 10.5 x 67.5	
				PRO	92203203	ø 294 x 28 x 56.5	⊕ ABS →12/03			91077600	ø 190 x 25	
				PRO	92229003	ø 294 x 26 x 55.3	⊖ ABS 01/04→					
RODIUS II 07/13→											
658800			Man		2372601	[+] 23726 16.5		Man		2393101	[+] 23931 15	
2.0 Xdi	07/13→	114 / 155										
2.0 Xdi 4WD	07/13→	114 / 155		PRO	92203003	ø 300 x 28 x 68		Man		82072300		
					TPM0001					TPM0001		
RODIUS 05/05→											
658900			Man		2372601	[+] 23726 16.5		Man		2393101	[+] 23931 15	
2.7 Xdi	05/05→	120 / 163										
2.7 Xdi	05/05→	121 / 165										
2.7 Xdi 4WD	05/05→	120 / 163										
2.7 Xdi 4WD	05/05→	121 / 165		PRO	92203003	ø 300 x 28 x 68		Man		82072300		
					TPM0001			Luc		91015700	ø 254 x 56	
										TPM0001		
659000			Man		2372601	[+] 23726 16.5		Man		2393101	[+] 23931 15	
3.2	05/05→	162 / 220										
3.2 4WD	07/07→	162 / 220		PRO	92203003	ø 300 x 28 x 68		Man		82072300		
					TPM0001					TPM0001		
STAVIC 02/05→											
659100			Man		2372601	[+] 23726 16.5		Man		2393101	[+] 23931 15	
2.7 270 sXDi	02/05→	121 / 165										
2.7 270 sXDi 4x4	02/05→	121 / 165		PRO	92203003	ø 300 x 28 x 68		Man		82072300		
3.2 4x4	02/05→	162 / 220						Luc		91015700	ø 254 x 56	

		kW / hp									
BRZ 06/12→											
659200			Tok		2576001	[+] 25760 16.7		Ake		2427101	[+] 24271 14.7	15" -brake
2.0	06/12→	147 / 200	Tok		82502900			NBK		2485401	[+] 24854 16	16" -brake
					92139500	ø 294 x 24 x 56.7	16" -brake	Ake		82518100		lower
				PRO	92094603	ø 276.5 x 24 x 56.8	15" -brake			92200000	ø 286 x 10 x 63	15" -brake
FORESTER (SF) 07/97→09/02											
659300			Ake		2355802	[+] 23558 17		Ake		2357202	[+] 23572 13.8	⊕ rear disc brake
2.0	08/97→09/02	90 / 122										
2.0	06/98→09/02	92 / 125	Ake		82501700			Ake		82502600		⊕ rear disc brake
				PRO	92094603	ø 276.5 x 24 x 56.8				91045901	ø 228.6 x 36	⊕ rear drum brake

		kW / hp											
FORESTER (SF) 07/97→09/02													
		659300								97030400		
2.0	08/97→09/02	90 / 122								92082000	ø 265.5 x 10 x 67.4	⊕ rear disc brake
2.0	06/98→09/02	92 / 125								94031000	ø 228,4 x 43	
										91055400	ø 170 x 32	
		659400	Ake		2355802	[+] 23558 17		Ake		2357202	[+] 23572 13.8	⊕ rear disc brake
2.0 S Turbo	06/98→04/01	125 / 170										
2.0 S Turbo	04/01→09/02	130 / 177	Ake		82501700			Ake		82502600		⊕ rear disc brake
2.5 AWD	07/97→05/02	123 / 167										
2.5 Turbo AWD	09/98→05/02	160 / 218		PRO	92094603	ø 276.5 x 24 x 56.8				91045901	ø 228.6 x 36	⊕ rear drum brake
										97030400		
										92082000	ø 265.5 x 10 x 67.4	⊕ rear disc brake
										91055400	ø 170 x 32	
FORESTER (SG) 09/02→													
		659500	Tok		2386501	[+] 23865 16.4		Ake		82502600		
2.0	09/02→	92 / 125										
			Tok		82502900					91045901	ø 228.6 x 36	
				PRO	92094603	ø 276.5 x 24 x 56.8				94031000	ø 228,4 x 43	
		659600	Tok		2386501	[+] 23865 16.4		Ake		2357202	[+] 23572 13.8	⊕ rear disc brake →05/03
2.0 S Turbo	09/02→	130 / 177										
			Tok		82502900			Ake		2433101	[+] 24331 14	⊕ rear disc brake 06/03→
					92139500	ø 294 x 24 x 56.7		Ake		82502600		⊕ rear disc brake
										92082000	ø 265.5 x 10 x 67.4	⊕ rear disc brake
										94031000	ø 228,4 x 43	⊕ rear drum brake
										91055400	ø 170 x 32	
										97035800		
		659700	Tok		2386501	[+] 23865 16.4		Ake		2357202	[+] 23572 13.8	
2.0 X	09/05→	116 / 158										
			Tok		82502900			Ake		82502600		
				PRO	92094603	ø 276.5 x 24 x 56.8				91045901	ø 228.6 x 36	
										94031000	ø 228,4 x 43	
		659800	Tok		2386501	[+] 23865 16.4		Ake		2357202	[+] 23572 13.8	⊕ rear disc brake
2.5	12/03→	155 / 211										
2.5 RX Nato AWD	11/02→08/05	115 / 156	Tok		82502900			Ake		82502600		⊕ rear disc brake
					92139500	ø 294 x 24 x 56.7				92082000	ø 265.5 x 10 x 67.4	⊕ rear disc brake
										94031000	ø 228,4 x 43	⊕ rear drum brake
										91055400	ø 170 x 32	
										97035800		
		659900	Tok		2386501	[+] 23865 16.4		Ake		2357202	[+] 23572 13.8	
2.5 All-wheel Drive	07/05→	121 / 165										
			Tok		82502900			Ake		82502600		
					92139500	ø 294 x 24 x 56.7				92082000	ø 265.5 x 10 x 67.4	
										91055400	ø 170 x 32	
		660000	Tok		2386501	[+] 23865 16.4		Ake		2433101	[+] 24331 14	
2.5 XT	09/05→	169 / 230										
			Tok		82502900			Ake		82502600		
					92139500	ø 294 x 24 x 56.7				92082000	ø 265.5 x 10 x 67.4	
										91055400	ø 170 x 32	

		kW / hp											
FORESTER (SH) 01/08→													
		660100	Tok		2386501	[+] 23865 16.4		Ake		2427101	[+] 24271 14.7	
2.0 AWD	01/08→	110 / 150										
2.0 AWD	01/10→	110 / 150	Tok		82502900			Ake		82518100		
				PRO	92094603	ø 276.5 x 24 x 56.8				92200000	ø 286 x 10 x 63	
										91068300	ø 190 x 32	
		660200	Tok		2386501	[+] 23865 16.4		Ake		2427101	[+] 24271 14.7	
2.0 D AWD	09/08→	108 / 147										
2.5 AWD	06/08→	169 / 230										
2.5 AWD	09/08→	123 / 165	Tok		82502900			Ake		82518100		
2.5 AWD	01/09→	126 / 171										
					92139500	ø 294 x 24 x 56.7				92200000	ø 286 x 10 x 63	
										91068300	ø 190 x 32	
FORESTER (SJ) 03/13→													
		660300	Tok		2386501	[+] 23865 16.4	16" -brake	Bre		2158001	[+] 21580 14.3	
2.0 D	03/13→	108 / 147										
			Ake		2422201	[+] 24222 18	17" -brake	Ake		2427101	[+] 24271 14.7	
			Tok		2576001	[+] 25760 16.7	16" -brake			82505300		
			Tok		82502900		16" -brake	Ake		82518100		
					92139500	ø 294 x 24 x 56.7	16" -brake		PRO	92262003	ø 274 x 10 x 62	
				PRO	92236503	ø 315.5 x 30 x 56.9	17" -brake					
		660400	Tok		2386501	[+] 23865 16.4		Ake		2427101	[+] 24271 14.7	
2.0 X	03/13→	110 / 150										
			Tok		2576001	[+] 25760 16.7		Ake		82518100		
			Tok		82502900				PRO	92262003	ø 274 x 10 x 62	
					92139500	ø 294 x 24 x 56.7						
		660500	Ake		2422201	[+] 24222 18		Bre		2158001	[+] 21580 14.3	
2.0 XT	03/13→	177 / 241										
2.5 XT	03/13→		Tok		82502900			Ake		82518100		
				PRO	92236503	ø 315.5 x 30 x 56.9						
IMPREZA Coupe (GFC) 11/95→12/00													
		660600	Ake		2149501	[+] 21495 17	⊖ ABS	Ake		2170301	[+] 21703 15	⊕ rear disc brake ⊕ ABS
1.6	12/96→12/00	66 / 90										
1.6 AWD	12/96→12/00	66 / 90	Ake		2378001	[+] 23780 17	⊕ ABS			82060800		⊕ rear disc brake ⊕ ABS
			Ake		82501700			Ake		82502600		
					92081800	ø 242 x 18 x 52.8	⊕ rim size 13"			91045901	ø 228.6 x 36	⊕ rear drum brake
					92081900	ø 260 x 24 x 56.8	⊕ rim size 14"			97030400		
										92082000	ø 265.5 x 10 x 67.4	⊕ rear disc brake ⊕ ABS
										94031000	ø 228,4 x 43	
		660700	Ake		2149501	[+] 21495 17		Ake		2170301	[+] 21703 15	
1.6	09/98→09/00	70 / 95										
					92081800	ø 242 x 18 x 52.8				91045901	ø 228.6 x 36	
										92082000	ø 265.5 x 10 x 67.4	
		660800	Ake		2149501	[+] 21495 17	→12/98	Ake		2170301	[+] 21703 15	⊕ rear disc brake ⊕ ABS →12/98
2.0	09/98→09/00	92 / 125										
2.0 AWD	12/95→12/00	85 / 115	Ake		2378001	[+] 23780 17	01/99→	Ake		2357202	[+] 23572 13.8	⊕ rear disc brake ⊕ ABS 01/99→
2.0 i	11/95→09/00	85 / 116										
			Ake		82501700					82060800		⊕ rear disc brake ⊕ ABS →12/98
								Ake		82502600		⊕ rear disc brake ⊕ ABS 01/99→
										91045901	ø 228.6 x 36	⊕ rear drum brake
										97030400		
										92082000	ø 265.5 x 10 x 67.4	⊕ rear disc brake

		kW / hp											
IMPREZA Coupe (GFC) 11/95→12/00													
		660800											
2.0	09/98→09/00	92 / 125											
2.0 AWD	12/95→12/00	85 / 115											
2.0 i	11/95→09/00	85 / 116											
		660900	Sum		2130701	[+] 21307 14.5		Ake		2357202	[+] 23572 13.8		
2.0 AWD	09/98→09/00	206 / 280											
			Tok		82502900					92142100	ø 266 x 18 x 67		
					92139500	ø 294 x 24 x 56.7				91055400	ø 170 x 32		
		661000	Ake		2148201	[+] 21482 17	→01/97	Ake		2170301	[+] 21703 15	⊕ rear disc brake	
2.0 Turbo AWD	12/96→12/00	155 / 211	Ake		2355802	[+] 23558 17	01/97→			82060800		⊕ rear disc brake	
			Ake		82501700		01/97→	Ake		82502600			
				PRO	92094603	ø 276.5 x 24 x 56.8				91045901	ø 228.6 x 36	⊕ rear drum brake	
										92082000	ø 265.5 x 10 x 67.4	⊕ rear disc brake	
										94031000	ø 228,4 x 43		
										91055400	ø 170 x 32		
										97035800			
		661100	Ake		2378001	[+] 23780 17				91045901	ø 228.6 x 36		
2.2 AWD	09/98→09/00	96 / 131											
2.2 i	09/98→09/00	96 / 131			92081900	ø 260 x 24 x 56.8				94031000	ø 228,4 x 43		
IMPREZA Estate (GD, GG) 12/00→08/05													
		661200			2437201	[+] 24372 17.9		Ake		2357202	[+] 23572 13.8		
1.5	06/01→08/05	74 / 101											
1.5	10/05→	81 / 110						Ake		82502600			
1.5 AWD	10/05→	81 / 110								91045901	ø 228.6 x 36		
		661300	Tok		2386501	[+] 23865 16.4		Ake		2357202	[+] 23572 13.8	⊕ rear disc brake	
1.5 AWD	05/06→	77 / 105			2437201	[+] 24372 17.9		Ake		82502600		⊕ rear disc brake	
										91045901	ø 228.6 x 36	⊕ rear drum brake	
										94031000	ø 228,4 x 43	⊕ rear drum brake	
		661400	Ake		2355802	[+] 23558 17	→10/02 Ø 277 mm	Ake		2357202	[+] 23572 13.8	⊕ rear disc brake	
1.6 AWD	12/00→	70 / 95	Ake		2378001	[+] 23780 17	Ø 260 mm	Ake		82502600		⊕ rear disc brake	
			Tok		2386501	[+] 23865 16.4	11/02→ Ø 277 mm			91045901	ø 228.6 x 36	⊕ rear drum brake	
			Ake		82501700		→10/02 Ø 277 mm			94031000	ø 228,4 x 43	⊕ rear drum brake	
					92081900	ø 260 x 24 x 56.8							
		661500	Ake		2355802	[+] 23558 17	→09/06	Ake		2357202	[+] 23572 13.8		
2.0 AWD	12/00→	92 / 125	Ake		2378001	[+] 23780 17	Ø 260 mm	Ake		82502600			
			Tok		2386501	[+] 23865 16.4	07/03→			92082000	ø 265.5 x 10 x 67.4		
			Ake		82501700		→09/06			91055400	ø 170 x 32		
										97035800			
		661600	Bre		2309204	[+] 23092 15		Ake		2338101	[+] 23381 15.5		
2.0 AWD	10/05→	184 / 250			92167900	ø 326 x 30 x 53			PRO	92173603	ø 290 x 18 x 67.4		
										91055400	ø 170 x 32		
										97035800			
		661700	Tok		2386501	[+] 23865 16.4		Ake		2433101	[+] 24331 14		
2.0 i R AWD	09/05→	118 / 160						Ake		82503300			
										91055400	ø 170 x 32		
										97035800			

		kW / hp											
IMPREZA Estate (GD, GG) 12/00→08/05													
2.0 Turbo AWD	12/00→	661800 160 / 218	Sum		2130701	[+] 21307 14.5		Ake		2338102	[+] 23381 17	
					92167900	ø 326 x 30 x 53				92142100	ø 266 x 18 x 67	
										91055400	ø 170 x 32	
										97035800		
2.0 WRX STi AWD	10/05→	661900 206 / 280	Bre		2309204	[+] 23092 15		Bre		2158001	[+] 21580 14.3	
								Ake		2338102	[+] 23381 17	Brembo
										92142100	ø 266 x 18 x 67	
2.0 WRX Turbo AWD	12/02→	662000 165 / 225	Sum		2130701	[+] 21307 14.5		Ake		2338102	[+] 23381 17	
					92139500	ø 294 x 24 x 56.7			PRO	92173603	ø 290 x 18 x 67.4	
										91055400	ø 170 x 32	
										97035800		
2.2	06/01→08/05	662100 94 / 128	Tok		2386501	[+] 23865 16.4		Ake		2357202	[+] 23572 13.8	→11/02
								Ake		2433101	[+] 24331 14	11/02→ ⊕ ABS Akebono
								Ake		82502600		→11/02
								Ake		82503300		11/02→ ⊕ ABS Akebono
2.5 AWD	10/05→	662200 221 / 300	Bre		2309204	[+] 23092 15		Ake		2338102	[+] 23381 17	
2.5 WRX AWD	09/05→	662300 169 / 230	Sum		2130701	[+] 21307 14.5		Ake		2338102	[+] 23381 17	
										92142100	ø 266 x 18 x 67	
IMPREZA Estate (GF) 08/92→12/00													
1.5 L 1.6 i 1.6 i AWD	09/98→09/00 06/98→12/00 06/98→12/00	662400 66 / 90 70 / 95 70 / 95	Ake		2378001	[+] 23780 17		Ake		2170301	[+] 21703 15	⊕ rear disc brake ⊕ ABS
			Ake		82501700					82060800		⊕ rear disc brake ⊕ ABS
					92081800	ø 242 x 18 x 52.8	⊕ rim size 13"			91045901	ø 228.6 x 36	⊕ rear drum brake
					92081900	ø 260 x 24 x 56.8	⊕ rim size 14"			97030400		
										92082000	ø 265.5 x 10 x 67.4	⊕ rear disc brake ⊕ ABS
										94031000	ø 228,4 x 43	
										91055400	ø 170 x 32	
1.6 i AWD	08/92→12/00	662500 66 / 90	Ake		2149501	[+] 21495 17	→08/96	Ake		2170301	[+] 21703 15	⊕ rear disc brake ⊕ ABS
			Ake		2378001	[+] 23780 17	09/96→			91045901	ø 228.6 x 36	⊕ rear drum brake
					82060800					97030400		
			Ake		82501700					92082000	ø 265.5 x 10 x 67.4	⊕ rear disc brake ⊕ ABS
					92081800	ø 242 x 18 x 52.8	⊕ rim size 13"			94031000	ø 228,4 x 43	
					92081900	ø 260 x 24 x 56.8	⊕ rim size 14"			91055400	ø 170 x 32	
1.8 i AWD	08/92→12/00	662600 76 / 103	Ake		2149501	[+] 21495 17	→08/96	Ake		2170301	[+] 21703 15	⊕ rear disc brake ⊕ ABS
			Ake		2378001	[+] 23780 17	09/96→			82060800		⊕ rear disc brake ⊕ ABS
			Ake		82501700					91045901	ø 228.6 x 36	⊕ rear drum brake
					92081800	ø 242 x 18 x 52.8	⊕ rim size 13"			97030400		
					92081900	ø 260 x 24 x 56.8	⊕ rim size 14"			92082000	ø 265.5 x 10 x 67.4	⊕ rear disc brake ⊕ ABS
										94031000	ø 228,4 x 43	
										91055400	ø 170 x 32	
2.0 i	09/98→09/00	662700 92 / 125	Ake		2149501	[+] 21495 17		Ake		2170301	[+] 21703 15	

R-S

		kW / hp										
IMPREZA Estate (GF) 08/92→12/00												
662700												
2.0 i	09/98→09/00	92 / 125	Ake	82501700					Ake	82060800		
				92081900	ø 260 x 24 x 56.8				91045901	ø 228.6 x 36		
									92082000	ø 265.5 x 10 x 67.4		
									94031000	ø 228,4 x 43		
									91055400	ø 170 x 32		
662800												
2.0 i 16V AWD	06/98→12/00	92 / 125	Ake	2149501	[+] 21495 17	→12/98			Ake	2170301	[+] 21703 15	⊕ rear disc brake ⊕ ABS →12/98
			Ake	2378001	[+] 23780 17	01/99→			Ake	2357202	[+] 23572 13.8	⊕ rear disc brake ⊕ ABS 01/99→
			Ake	82501700						82060800		⊕ rear disc brake ⊕ ABS →12/98
				92081800	ø 242 x 18 x 52.8	⊕ rim size 13"			91045901	ø 228.6 x 36		⊕ rear drum brake
				92081900	ø 260 x 24 x 56.8	⊕ rim size 14"			97030400			
									92082000	ø 265.5 x 10 x 67.4		⊕ rear disc brake →12/98
									92142100	ø 266 x 18 x 67		01/99→ ⊕ rear disc brake
									94031000	ø 228,4 x 43		⊕ rear drum brake
									91055400	ø 170 x 32		⊕ rear disc brake
662900												
2.0 i AWD	12/95→12/00	85 / 116	Ake	2149501	[+] 21495 17	→12/98			Ake	2170301	[+] 21703 15	⊕ rear disc brake ⊕ ABS →12/98
			Ake	2378001	[+] 23780 17	01/99→			Ake	2357202	[+] 23572 13.8	⊕ rear disc brake ⊕ ABS 01/99→
			Ake	82501700						82060800		⊕ rear disc brake ⊕ ABS →12/98
				92081800	ø 242 x 18 x 52.8	⊕ rim size 13"			91045901	ø 228.6 x 36		⊕ rear drum brake
				92081900	ø 260 x 24 x 56.8	⊕ rim size 14"			97030400			
									92082000	ø 265.5 x 10 x 67.4		⊕ rear disc brake
									94031000	ø 228,4 x 43		
									91055400	ø 170 x 32		
663000												
2.0 i Turbo AWD	03/94→12/00	155 / 211	Sum	2185401	[+] 21854 15				Ake	2357202	[+] 23572 13.8	
2.0 Turbo GT AWD	06/98→12/00	160 / 218	Ake	82501700						82060800		
				92139500	ø 294 x 24 x 56.7				97030400			
									92142100	ø 266 x 18 x 67		
									91055400	ø 170 x 32		
									97035800			
663100												
2.2 GX AWD	09/98→09/00	96 / 131	Ake	2378001	[+] 23780 17					91045901	ø 228.6 x 36	
			Ake	82501700						94031000	ø 228,4 x 43	
				92081900	ø 260 x 24 x 56.8							
IMPREZA Hatchback (GP) 06/12→												
663200												
1.6 i	06/12→	84 / 114	Tok	2386501	[+] 23865 16.4				Ake	2427101	[+] 24271 14.7	
1.6 i AWD	06/12→	84 / 114	Tok	82502900					Ake	82518100		
				92094603	ø 276.5 x 24 x 56.8				92262003	ø 274 x 10 x 62		
									91080500	ø 169.8 x 35		→07/12
663300												
2.0 AWD	06/12→	/ 150	Tok	2386501	[+] 23865 16.4				Ake	2427101	[+] 24271 14.7	
			Tok	2576001	[+] 25760 16.7				Ake	82518100		
			Tok	82502900						92262003	ø 274 x 10 x 62	
				92094603	ø 276.5 x 24 x 56.8					91080500	ø 169.8 x 35	→07/12

IMPREZA Hatchback (GR, GH, G3) 12/07→

		kW / hp												
		663400	Tok		2386501	[+] 23865 16.4		Ake		2427101	[+] 24271 14.7	⊕ rear disc brake
1.5 All-wheel Drive	02/08→	79 / 107										
1.5 F	02/08→	79 / 107	Tok		82502900			Ake		82518100		⊕ rear disc brake
				PRO	92094603	ø 276.5 x 24 x 56.8				92200000	ø 286 x 10 x 63	⊕ rear disc brake
										94036000	ø 254,0 x 48.5	⊕ rear drum brake
										91068300	ø 190 x 32	
		663500	Tok		2386501	[+] 23865 16.4		Ake		2427101	[+] 24271 14.7	
2.0 All-wheel Drive	12/07→	118 / 160										
2.0 i All-wheel Drive	01/08→	110 / 150	Tok		82502900			Ake		82518100		
				PRO	92094603	ø 276.5 x 24 x 56.8				92200000	ø 286 x 10 x 63	
										91068300	ø 190 x 32	
		663600	Tok		2386501	[+] 23865 16.4		Ake		2427101	[+] 24271 14.7	
2.0 D All-wheel Drive	01/09→	110 / 150										
2.0 D All-wheel Drive	01/11→	80 / 109										
2.5 All-wheel Drive	01/08→	169 / 230	Tok		82502900			Ake		82518100		
2.5 WRX SE AWD	01/11→	195 / 265										
2.5 WRX SE AWD	06/12→	195 / 265			92139500	ø 294 x 24 x 56.7				92200000	ø 286 x 10 x 63	
										91068300	ø 190 x 32	
		663700	Bre		2309204	[+] 23092 15	Brembo	Bre		2158001	[+] 21580 14.3	Brembo 17" -brake
2.5 All-wheel Drive	01/08→	221 / 301										
2.5 STI CS400	04/10→	294 / 400	Ake		2422201	[+] 24222 18	⊖ Brembo	NBK		2485401	[+] 24854 16	⊖ Brembo 16" -brake
2.5 WRX STI AWD	06/12→	224 / 305		PRO	92194303	ø 326 x 30 x 52.7	Brembo			82505300		⊖ Brembo 16" -brake
				PRO	92199203	ø 316 x 30 x 56.5	⊖ Brembo		PRO	92243703	ø 316 x 20 x 63.2	Brembo 17" -brake
										91068300	ø 190 x 32	

IMPREZA Hatchback 12/02→12/07

		663800	Ake		2355802	[+] 23558 17		Ake		2357202	[+] 23572 13.8	
2.0 i All-wheel Drive	12/02→12/07	92 / 125										
2.0 i All-wheel Drive	10/05→12/07	118 / 160	Tok		82502900			Ake		82502600		
2.0 i WRX All-wheel Drive	12/02→09/05	168 / 228										
2.0 WRX STi All-wheel Drive	12/02→09/05	195 / 265		PRO	92094603	ø 276.5 x 24 x 56.8				92082000	ø 265.5 x 10 x 67.4	
2.5 All-wheel Drive	12/02→09/05	112 / 152								91055400	ø 170 x 32	

IMPREZA Kombi (GD, GG) 12/00→08/05 → IMPREZA Estate (GD, GG), Page 1078

IMPREZA Kombi (GF) 08/92→12/00 → IMPREZA Estate (GF), Page 1079

IMPREZA Saloon (GC) 08/92→12/00

		663900	Ake		2149501	[+] 21495 17	⊖ ABS	Ake		2170301	[+] 21703 15	⊕ rear disc brake ⊕ ABS
1.6 i	08/92→12/00	66 / 90										
1.6 i	06/98→12/00	70 / 95	Ake		2378001	[+] 23780 17	⊕ ABS			82060800		⊕ rear disc brake ⊕ ABS
1.6 i AWD	08/92→12/00	66 / 90										
1.6 i AWD	06/98→12/00	70 / 95	Ake		82501700					91045901	ø 228.6 x 36	⊕ rear drum brake
1.8 i AWD	08/92→12/00	76 / 103			92081800	ø 242 x 18 x 52.8	⊕ rim size 13"			97030400		
					92081900	ø 260 x 24 x 56.8	⊕ rim size 14"			92082000	ø 265.5 x 10 x 67.4	⊕ rear disc brake ⊕ ABS
										94031000	ø 228,4 x 43	
		664000	Sum		2130701	[+] 21307 14.5		Ake		2357202	[+] 23572 13.8	
2.0 AWD	09/98→09/00	206 / 280										
			Tok		82502900					92142100	ø 266 x 18 x 67	
					92139500	ø 294 x 24 x 56.7				91055400	ø 170 x 32	
		664100	Ake		2149501	[+] 21495 17		Ake		2170301	[+] 21703 15	
2.0 i	09/98→09/00	92 / 125										
			Ake		82501700					82060800		
					92081900	ø 260 x 24 x 56.8				91045901	ø 228.6 x 36	
										92082000	ø 265.5 x 10 x 67.4	
										94031000	ø 228,4 x 43	
										91055400	ø 170 x 32	

R - S

		kW / hp										
IMPREZA Saloon (GC) 08/92→12/00												
664200			Ake		2149501	[+] 21495 17	→12/98	Ake		2170301	[+] 21703 15	⊕ rear disc brake ⊕ ABS →12/98
2.0 i AWD	10/95→12/00	85 / 115	Ake		2378001	[+] 23780 17	01/99→	Ake		2357202	[+] 23572 13.8	⊕ rear disc brake ⊕ ABS 01/99→
			Ake		82501700					82060800		⊕ rear disc brake ⊕ ABS →12/98
								Ake		82502600		⊕ rear disc brake ⊕ ABS 01/99→
										91045901	ø 228.6 x 36	⊕ rear drum brake
										97030400		
										92082000	ø 265.5 x 10 x 67.4	⊕ rear disc brake
										94031000	ø 228,4 x 43	⊕ rear drum brake
664300			Ake		2149501	[+] 21495 17	→12/98	Ake		2170301	[+] 21703 15	⊕ rear disc brake ⊕ ABS →12/98
2.0 i AWD	06/98→12/00	92 / 125	Ake		2378001	[+] 23780 17	01/99→	Ake		2357202	[+] 23572 13.8	⊕ rear disc brake ⊕ ABS 01/99→
			Ake		82501700					82060800		⊕ rear disc brake ⊕ ABS →12/98
								Ake		82502600		⊕ rear disc brake ⊕ ABS 01/99→
										91045901	ø 228.6 x 36	⊕ rear drum brake
										97030400		
										92082000	ø 265.5 x 10 x 67.4	⊕ rear disc brake
										94031000	ø 228,4 x 43	
664400			Sum		2185401	[+] 21854 15	→01/97	Ake		2170301	[+] 21703 15	⊕ rear disc brake
2.0 Turbo GT AWD	03/94→12/00	155 / 211	Ake		2355802	[+] 23558 17	01/97→	Ake		2357202	[+] 23572 13.8	
			Ake		82501700		01/97→			82060800		⊕ rear disc brake
					92139500	ø 294 x 24 x 56.7				91045901	ø 228.6 x 36	⊕ rear drum brake
										97030400		
										92082000	ø 265.5 x 10 x 67.4	⊕ rear disc brake
										91055400	ø 170 x 32	
										97035800		
664500			Sum		2130701	[+] 21307 14.5		Ake		2170301	[+] 21703 15	⊕ rear disc brake
2.0 Turbo GT AWD	06/98→12/00	160 / 218	Sum		2185401	[+] 21854 15		Ake		2357202	[+] 23572 13.8	
			Ake		82501700					82060800		⊕ rear disc brake
					92139500	ø 294 x 24 x 56.7				97030400		
										92082000	ø 265.5 x 10 x 67.4	⊕ rear disc brake
										91055400	ø 170 x 32	
										97035800		
664600			Ake		2378001	[+] 23780 17				91045901	ø 228.6 x 36	
2.2 GX AWD	09/98→09/00	96 / 131	Ake		82501700					94031000	ø 228,4 x 43	
					92081900	ø 260 x 24 x 56.8						
IMPREZA Saloon (GD, GG) 12/00→09/06												
664700			Tok		2386501	[+] 23865 16.4	→06/02	Ake		2357202	[+] 23572 13.8	
1.5	06/01→09/05	74 / 101			2437201	[+] 24372 17.9	07/02→	Ake		82502600		
1.6	06/01→09/06	70 / 95	Tok		82502900					91045901	ø 228.6 x 36	
					92081900	ø 260 x 24 x 56.8				92082000	ø 265.5 x 10 x 67.4	
										94031000	ø 228,4 x 43	

R-S

IMPREZA Saloon (GD, GG) 12/00→09/06

1.5 1.6	06/01→09/05 06/01→09/06	664700 74 / 101 70 / 95							91055400	ø 170 x 32	
1.5 1.5 AWD	10/05→ 10/05→	664800 81 / 110 81 / 110			2437201	[+] 24372 17.9		Ake	2357202	[+] 23572 13.8	
			Ake		82501700			Ake	82502600		
					92081900	ø 260 x 24 x 56.8			91045901	ø 228.6 x 36	
									92082000	ø 265.5 x 10 x 67.4	
									94031000	ø 228,4 x 43	
									91055400	ø 170 x 32	
1.5 AWD	05/06→	664900 77 / 105			2437201	[+] 24372 17.9		Ake	2357202	[+] 23572 13.8	
			Tok		82502900			Ake	82502600		
					92081900	ø 260 x 24 x 56.8			91045901	ø 228.6 x 36	
									92082000	ø 265.5 x 10 x 67.4	
									94031000	ø 228,4 x 43	
									91055400	ø 170 x 32	
1.6 AWD	12/00→	665000 70 / 95	Tok		2386501	[+] 23865 16.4	→06/02	Ake	2357202	[+] 23572 13.8	
					2437201	[+] 24372 17.9	07/02→	Ake	82502600		
			Ake		82501700				91045901	ø 228.6 x 36	
					92081900	ø 260 x 24 x 56.8			92082000	ø 265.5 x 10 x 67.4	
									94031000	ø 228,4 x 43	
									91055400	ø 170 x 32	
2.0 AWD 2.0 WRX Turbo AWD	10/05→ 12/02→	665100 184 / 250 165 / 225	Sum		2130701	[+] 21307 14.5		Ake	2338102	[+] 23381 17	
					92167900	ø 326 x 30 x 53			PRO 92173603	ø 290 x 18 x 67.4	
									91055400	ø 170 x 32	
									97035800		
2.0 AWD	10/05→	665200 206 / 280	Sum		2130701	[+] 21307 14.5		Ake	2338102	[+] 23381 17	
					92167900	ø 326 x 30 x 53			PRO 92173603	ø 290 x 18 x 67.4	
									91055400	ø 170 x 32	
2.0 i AWD	12/00→	665300 92 / 125	Ake		2355802	[+] 23558 17	→09/06	Ake	2357202	[+] 23572 13.8	→10/02
			Ake		82501700		→09/06	Ake	2433101	[+] 24331 14	11/02→ →09/05 ⊕ ABS Akebono
				PRO	92094603	ø 276.5 x 24 x 56.8		Ake	82502600		→10/02
								Ake	82503300		11/02→ →09/05 ⊕ ABS Akebono
									92082000	ø 265.5 x 10 x 67.4	
									91055400	ø 170 x 32	
									97035800		
2.0 i AWD 2.0 i WRX AWD	12/01→11/02 12/02→09/05	665400 150 / 204 168 / 228	Ake		2355802	[+] 23558 17		Ake	2357202	[+] 23572 13.8	
			Tok		82502900			Ake	82502600		
				PRO	92094603	ø 276.5 x 24 x 56.8			92082000	ø 265.5 x 10 x 67.4	
									91055400	ø 170 x 32	
2.0 i R AWD	09/05→	665500 118 / 160	Tok		2386501	[+] 23865 16.4		Ake	2433101	[+] 24331 14	
			Tok		82502900			Ake	82502600		
				PRO	92094603	ø 276.5 x 24 x 56.8		Ake	82503300		

R - S

		kW / hp											
IMPREZA Saloon (GD, GG) 12/00→09/06													
665500													
2.0 i R AWD	09/05→	118 / 160								92082000	ø 265.5 x 10 x 67.4	
										91055400	ø 170 x 32	
										97035800		
665600			Bre		2309204	[+] 23092 15		Bre		2158001	[+] 21580 14.3	
2.0 WRX STi AWD	11/01→	195 / 265			92167900	ø 326 x 30 x 53	→04/04		PRO	92173703	ø 316 x 20 x 67	→04/04
2.0 WRX STi AWD	02/04→	235 / 320		PRO	92194303	ø 326 x 30 x 52.7	05/04→		PRO	92227803	ø 316 x 20 x 67.5	05/04→
										91055400	ø 170 x 32	
										97035800		
665700			Sum		2130701	[+] 21307 14.5		Ake		2338102	[+] 23381 17	
2.0 WRX Turbo AWD	12/00→	160 / 218	Tok		82502900					92142100	ø 266 x 18 x 67	
					92167900	ø 326 x 30 x 53			PRO	92173603	ø 290 x 18 x 67.4	
										91055400	ø 170 x 32	
										97035800		
665800			Tok		2386501	[+] 23865 16.4		Ake		2357202	[+] 23572 13.8	→11/02
2.2	06/01→08/05	94 / 128	Tok		82502900			Ake		2433101	[+] 24331 14	11/02→ ⊕ ABS Akebono
				PRO	92094603	ø 276.5 x 24 x 56.8		Ake		82502600		→11/02
								Ake		82503300		11/02→ ⊕ ABS Akebono
										92082000	ø 265.5 x 10 x 67.4	
										91055400	ø 170 x 32	
665900			Ake		2355802	[+] 23558 17	→10/02	Ake		2357202	[+] 23572 13.8	→10/02
2.5 AWD	03/01→09/05	130 / 177	Tok		2386501	[+] 23865 16.4	11/02→	Ake		2433101	[+] 24331 14	11/02→
			Tok		82502900			Ake		82502600		→10/02
				PRO	92094603	ø 276.5 x 24 x 56.8		Ake		82503300		11/02→
										92082000	ø 265.5 x 10 x 67.4	
										91055400	ø 170 x 32	
										97035800		
666000			Bre		2309204	[+] 23092 15		Bre		2158001	[+] 21580 14.3	
2.5 AWD	10/05→	221 / 300		PRO	92194303	ø 326 x 30 x 52.7			PRO	92227803	ø 316 x 20 x 67.5	
2.5 WRX STi AWD	09/05→	206 / 280								91055400	ø 170 x 32	
666100			Tok		2386501	[+] 23865 16.4		Ake		2357202	[+] 23572 13.8	
2.5 i AWD	12/02→09/05	112 / 152	Tok		82502900			Ake		2433101	[+] 24331 14	
				PRO	92094603	ø 276.5 x 24 x 56.8		Ake		82502600		
								Ake		82503300		
										92082000	ø 265.5 x 10 x 67.4	
										91055400	ø 170 x 32	
										97035800		
666200			Sum		2130701	[+] 21307 14.5		Ake		2338102	[+] 23381 17	
2.5 i WRX AWD	09/05→	169 / 230			92081900	ø 260 x 24 x 56.8				92142100	ø 266 x 18 x 67	
										91055400	ø 170 x 32	

IMPREZA Saloon (GR) 02/08→

		666300	Tok		2386501	[+] 23865 16.4		Ake		2427101	[+] 24271 14.7	⊕ rear disc brake
1.5	02/08→	79 / 107										
1.5 AWD	02/08→	79 / 107	Tok		82502900			Ake		82518100		⊕ rear disc brake
				PRO	92094603	ø 276.5 x 24 x 56.8				92200000	ø 286 x 10 x 63	⊕ rear disc brake
										94036000	ø 254,0 x 48.5	⊕ rear drum brake
										91068300	ø 190 x 32	
		666400	Tok		2386501	[+] 23865 16.4		Ake		2427101	[+] 24271 14.7	
2.0 AWD	01/11→	125 / 170										
2.0 i AWD	01/11→	110 / 150	Tok		82502900			Ake		82518100		
				PRO	92094603	ø 276.5 x 24 x 56.8				92200000	ø 286 x 10 x 63	
										91068300	ø 190 x 32	
		666500	Tok		2386501	[+] 23865 16.4		Ake		2427101	[+] 24271 14.7	
2.5 WRX SE AWD	01/11→	195 / 265										
			Tok		82502900			Ake		82518100		
					92139500	ø 294 x 24 x 56.7				92200000	ø 286 x 10 x 63	
										91068300	ø 190 x 32	
		666600	Bre		2309204	[+] 23092 15	Brembo	Bre		2158001	[+] 21580 14.3	Brembo 17" -brake
2.5 WRX STI AWD	01/11→	221 / 301										
2.5 WRX STI AWD	06/12→	224 / 305	Ake		2422201	[+] 24222 18	⊖ Brembo	NBK		2485401	[+] 24854 16	⊖ Brembo 16" -brake
				PRO	92194303	ø 326 x 30 x 52.7	Brembo			82505300		⊖ Brembo 16" -brake
				PRO	92199203	ø 316 x 30 x 56.5	⊖ Brembo		PRO	92243703	ø 316 x 20 x 63.2	Brembo 17" -brake
										91068300	ø 190 x 32	

IMPREZA Schrägheck (GP) 06/12→ → IMPREZA Hatchback (GP), Page 1080

IMPREZA Schrägheck (GR, GH, G3) 12/07→ → IMPREZA Hatchback (GR, GH, G3), Page 1081

IMPREZA Schrägheck 12/02→12/07 → IMPREZA Hatchback, Page 1081

IMPREZA Stufenheck (GC) 08/92→12/00 → IMPREZA Saloon (GC), Page 1081

IMPREZA Stufenheck (GD, GG) 12/00→09/06 → IMPREZA Saloon (GD, GG), Page 1082

IMPREZA Stufenheck (GR) 02/08→ → IMPREZA Saloon (GR), Page 1085

JUSTY II (JMA, MS) 10/95→11/03

		666700	Bos		2329601	[+] 23296 15				91074800	ø 200 x 32	
1.3 4x4	04/01→11/03	63 / 86										
					92069000	ø 231 x 17 x 50				94032600	ø 200 x 40	
		666800	Sum		2133301	[+] 21333 15	05/96→ →06/98			91039001	ø 200 x 32	→06/98
1.3 GX 4x4	10/95→11/03	50 / 68										
			Bos		2329601	[+] 23296 15	07/98→ →09/00			91074800	ø 200 x 32	07/98→
					82044500		05/96→ →06/98			94032600	ø 200 x 40	
					92069000	ø 231 x 17 x 50						

JUSTY III (G3X) 09/03→

		666900	Bos		2329601	[+] 23296 15				91065200	ø 200 x 29	
1.3	09/03→	69 / 94										
1.5	09/03→	73 / 99	Bos		2360501	[+] 23605 15.5				97032500		
				PRO	92135303	ø 253 x 17 x 49.1				84065200	bore ø 15.9 ø 200 x 29	

JUSTY IV 01/07→

		667000	Sum		2350701	[+] 23507 15	⊕ rim size 14" ⊕ autom.			91067900	ø 180 x 28	
1.0	01/07→	51 / 69										
			Luc		2428303	[+] 24283 16.5	⊕ rim size 14" ⊕ man.			94036400	ø 180,0 x 33.5	
			Sum		2526201	[+] 25262 15.4	⊕ rim size 13"					
			Luc		82512900		⊕ rim size 14" ⊕ man.					
					92129100	ø 234 x 16 x 41	⊕ rim size 13"					
					92165600	ø 246 x 17 x 41.9	⊕ rim size 14" ⊕ autom.					

		kW / hp										
JUSTY IV 01/07→												
1.0	01/07→	667000 51 / 69		PRO	92204503	ø 254 x 22 x 42	⊕ rim size 14" ⊕ man.					
1.3 AWD	03/08→	667100 67 / 91	Sum		2350701	[+] 23507 15				91071800	ø 180 x 27	
				PRO	92204503	ø 254 x 22 x 42						
JUSTY Mk II (JMA, MS) 10/95→11/03 → JUSTY II (JMA, MS), Page 1085												
LEGACY II (BD, BG) 09/94→03/99												
2.0 i	09/94→03/99	667200 85 / 116	Ake		2149501	[+] 21495 17		Ake		2170301	[+] 21703 15	
			Ake		2378001	[+] 23780 17				82060800		
			Ake		82501700					91045901	ø 228.6 x 36	
					92081900	ø 260 x 24 x 56.8				92082000	ø 265.5 x 10 x 67.4	
										94031000	ø 228,4 x 43	
										91055400	ø 170 x 32	
										97035800		
2.0 i 4WD 2.2 i 4WD	09/94→03/99 09/94→03/99	667300 85 / 116 94 / 128	Ake		2149501	[+] 21495 17		Ake		2170301	[+] 21703 15	
			Ake		2378001	[+] 23780 17				82060800		
			Ake		82501700					92082000	ø 265.5 x 10 x 67.4	
					92081900	ø 260 x 24 x 56.8				94031000	ø 228,4 x 43	
										91055400	ø 170 x 32	
										97035800		
2.2 i 4WD	06/96→03/99	667400 96 / 131	Ake		2149501	[+] 21495 17		Ake		2170301	[+] 21703 15	⊕ rear disc brake
			Ake		2378001	[+] 23780 17				82060800		⊕ rear disc brake
			Ake		82501700					91045901	ø 228.6 x 36	⊕ rear drum brake
					92081900	ø 260 x 24 x 56.8				92082000	ø 265.5 x 10 x 67.4	⊕ rear disc brake
										94031000	ø 228,4 x 43	⊕ rear drum brake
										91055400	ø 170 x 32	⊕ rear disc brake
										97035800		⊕ rear disc brake
2.5 i 4WD	06/96→03/99	667500 110 / 150	Ake		2355802	[+] 23558 17		Ake		2170301	[+] 21703 15	
			Ake		82501700					82060800		
				PRO	92094603	ø 276.5 x 24 x 56.8				92082000	ø 265.5 x 10 x 67.4	
										91055400	ø 170 x 32	
										97035800		
LEGACY III (BE, BH) 10/98→08/03												
2.0	04/99→08/03	667600 92 / 125	Ake		2355802	[+] 23558 17	Ø 276.5 mm	Ake		2170301	[+] 21703 15	→07/00
			Ake		2378001	[+] 23780 17	Ø 260 mm	Ake		2357202	[+] 23572 13.8	08/00→
			Ake		82501700		Ø 276.5 mm			82060800		→07/00
					92081900	ø 260 x 24 x 56.8	⊕ 2378001	Ake		82502600		08/00→
				PRO	92094603	ø 276.5 x 24 x 56.8	⊕ 2355802			92082000	ø 265.5 x 10 x 67.4	→07/00
										92158800	ø 290 x 10 x 67.5	08/00→
										91055400	ø 170 x 32	
										97035800		
2.0 AWD 2.0 RSK AWD 3.0 H6 AWD	06/02→08/03 08/00→08/03 08/00→08/03	667700 206 / 280 191 / 260 154 / 209	Ake		2355802	[+] 23558 17		Ake		2357202	[+] 23572 13.8	
			Ake		82501700			Ake		82502600		

R - S

		kW / hp									
LEGACY III (BE, BH) 10/98→08/03											
		667700									
2.0 AWD	06/02→08/03	206 / 280							92082000	ø 265.5 x 10 x 67.4	
2.0 RSK AWD	08/00→08/03	191 / 260							91055400	ø 170 x 32	
3.0 H6 AWD	08/00→08/03	154 / 209							97035800		
		667800	Ake		2355802	[+] 23558 17		Ake	2170301	[+] 21703 15	→07/00
2.5	10/98→08/03	115 / 156	Ake		82501700			Ake	2357202	[+] 23572 13.8	08/00→
				PRO	92094603	ø 276.5 x 24 x 56.8			82060800		→07/00
								Ake	82502600		08/00→
									92082000	ø 265.5 x 10 x 67.4	→07/00
									92158800	ø 290 x 10 x 67.5	08/00→
									91055400	ø 170 x 32	
									97035800		
LEGACY III Estate (BE, BH) 12/98→08/03											
		667900	Ake		2355802	[+] 23558 17	Ø 276.5 mm	Ake	2170301	[+] 21703 15	→07/00
2.0 AWD	12/98→08/03	92 / 125	Ake		2378001	[+] 23780 17	Ø 260 mm	Ake	2357202	[+] 23572 13.8	08/00→
			Ake		82501700		Ø 276.5 mm		82060800		→07/00
					92081900	ø 260 x 24 x 56.8	⊕ 2378001	Ake	82502600		08/00→
				PRO	92094603	ø 276.5 x 24 x 56.8	⊕ 2355802		92082000	ø 265.5 x 10 x 67.4	→07/00
									92158800	ø 290 x 10 x 67.5	08/00→
									91055400	ø 170 x 32	
									97035800		
		668000	Ake		2355802	[+] 23558 17		Ake	2357202	[+] 23572 13.8	
2.0 AWD	06/02→08/03	206 / 280	Ake		82501700			Ake	82502600		
2.0 RSK AWD	08/00→08/03	191 / 260							92082000	ø 265.5 x 10 x 67.4	
3.0 H6 AWD	08/00→08/03	154 / 209							91055400	ø 170 x 32	
									97035800		
		668100	Ake		2355802	[+] 23558 17		Ake	2170301	[+] 21703 15	→07/00
2.5 AWD	12/98→08/03	115 / 156	Ake		82501700			Ake	2357202	[+] 23572 13.8	08/00→
				PRO	92094603	ø 276.5 x 24 x 56.8			82060800		→07/00
								Ake	82502600		08/00→
									92082000	ø 265.5 x 10 x 67.4	→07/00
									92158800	ø 290 x 10 x 67.5	08/00→
									91055400	ø 170 x 32	
									97035800		
LEGACY III Kombi (BE, BH) 12/98→08/03 → LEGACY III Estate (BE, BH), Page 1087											
LEGACY IV (BL, BP) 09/03→12/09 → LEGACY IV, Page 1087											
LEGACY IV 09/03→12/09											
		668200	Tok		2386501	[+] 23865 16.4		Ake	2427101	[+] 24271 14.7	
2.0	09/03→	101 / 138									
2.0	06/05→	121 / 165	Tok		82502900			Ake	82502600		
2.0 D	02/08→	110 / 150									
2.0 R	09/07→	110 / 150		PRO	92094603	ø 276.5 x 24 x 56.8			92167800	ø 274 x 10 x 67.5	
2.5	09/03→	121 / 165							91080400	ø 169.8 x 36	
		668300	Ake		2422201	[+] 24222 18		Ake	2357202	[+] 23572 13.8	
2.0	06/05→	132 / 179									
2.0	06/05→	140 / 190									

		kW / hp										
LEGACY IV 09/03→12/09												
2.0 Turbo AWD	09/03→11/06	180 / 245	Tok		82502900			Ake		82503600		
3.0 R	09/03→	180 / 245		PRO	92236503	ø 315.5 x 30 x 56.9			PRO	92173603	ø 290 x 18 x 67.4	
										91080400	ø 169.8 x 36	
		668400	Tok		2386501	[+] 23865 16.4		Ake		2427101	[+] 24271 14.7	
2.5 i	09/07→	127 / 173	Tok		82502900			Ake		82502600		
				PRO	92094603	ø 276.5 x 24 x 56.8				92167800	ø 274 x 10 x 67.5	
		668500	Ake		2422201	[+] 24222 18		Ake		2357202	[+] 23572 13.8	
2.5 STI AWD	09/06→12/09	194 / 264										
2.5 T AWD	09/06→12/09	184 / 250		PRO	92236503	ø 315.5 x 30 x 56.9			PRO	92173603	ø 290 x 18 x 67.4	
										91080400	ø 169.8 x 36	
LEGACY IV Estate (BL, BP, B13_) 09/03→12/09												
		668600	Tok		2386501	[+] 23865 16.4		Ake		2427101	[+] 24271 14.7	
2.0 AWD	09/03→	101 / 138										
2.0 D AWD	02/08→	110 / 150	Tok		82502900			Ake		82502600		
2.0 R AWD	09/07→	110 / 150										
2.5 AWD	09/03→	121 / 165		PRO	92094603	ø 276.5 x 24 x 56.8				92167800	ø 274 x 10 x 67.5	
										91080400	ø 169.8 x 36	
		668700	Ake		2422201	[+] 24222 18		Ake		2357202	[+] 23572 13.8	
2.0 AWD	06/05→	121 / 165										
2.0 AWD	06/05→	132 / 179	Tok		82502900			Ake		82503600		
2.0 AWD	06/05→	140 / 190										
2.0 Turbo AWD	09/03→11/06	180 / 245										
3.0 R AWD	09/03→	180 / 245		PRO	92236503	ø 315.5 x 30 x 56.9			PRO	92173603	ø 290 x 18 x 67.4	
										91080400	ø 169.8 x 36	
		668800	Tok		2386501	[+] 23865 16.4		Ake		2427101	[+] 24271 14.7	
2.5 i AWD	01/08→	127 / 173	Tok		82502900			Ake		82502600		
				PRO	92094603	ø 276.5 x 24 x 56.8				92167800	ø 274 x 10 x 67.5	
		668900	Ake		2422201	[+] 24222 18		Ake		2357202	[+] 23572 13.8	
2.5 STI AWD	09/06→12/09	194 / 264										
2.5 T AWD	09/06→12/09	184 / 250		PRO	92236503	ø 315.5 x 30 x 56.9			PRO	92173603	ø 290 x 18 x 67.4	
										91080400	ø 169.8 x 36	
LEGACY IV Kombi (BL, BP, B13_) 09/03→12/09 → LEGACY IV Estate (BL, BP, B13_), Page 1088												
LEGACY V (BM, BR) 09/09→ → LEGACY V, Page 1088												
LEGACY V 09/09→												
		669000	Tok		2386501	[+] 23865 16.4		Ake		2427101	[+] 24271 14.7	
2.0 D AWD	09/09→	110 / 150	Tok		82502900					92200000	ø 286 x 10 x 63	
					92139500	ø 294 x 24 x 56.7						
		669100	Tok		2386501	[+] 23865 16.4		Ake		2427101	[+] 24271 14.7	
2.0 i AWD	09/09→	110 / 150										
2.5 i AWD	09/09→	123 / 167	Tok		82502900			Ake		82503600		
				PRO	92094603	ø 276.5 x 24 x 56.8				92200000	ø 286 x 10 x 63	
		669200	Ake		2422201	[+] 24222 18		NBK		2485401	[+] 24854 16	
2.5 GT AWD	07/10→	195 / 265										
3.6 AWD	09/10→	191 / 260		PRO	92236503	ø 315.5 x 30 x 56.9						
LEGACY V Estate (BM, BR) 09/09→												
		669300	Tok		2386501	[+] 23865 16.4		Ake		2427101	[+] 24271 14.7	
2.0 D	09/09→	110 / 150										
2.0 D	01/13→	108 / 147	Tok		82502900			Ake		82518100		
					92139500	ø 294 x 24 x 56.7				92200000	ø 286 x 10 x 63	
		669400	Tok		2386501	[+] 23865 16.4		Ake		2427101	[+] 24271 14.7	
2.0 i	09/09→	110 / 150										
			Tok		82502900			Ake		82518100		

		kW / hp										
LEGACY V Estate (BM, BR) 09/09→												
2.0 i	09/09→	669400 110 / 150		PRO	92094603	ø 276.5 x 24 x 56.8				92200000	ø 286 x 10 x 63	
2.5 GT	07/10→	669500 195 / 265	Ake		2422201	[+] 24222 18		NBK		2485401	[+] 24854 16	
			Ake		82503600					82505300		
				PRO	92236503	ø 315.5 x 30 x 56.9						
2.5 i	09/09→	669600 123 / 167	Tok		2386501	[+] 23865 16.4		Ake		2427101	[+] 24271 14.7	
			Tok		82502900			Ake		82518100		
					92139500	ø 294 x 24 x 56.7	16" -brake			92200000	ø 286 x 10 x 63	
				PRO	92094603	ø 276.5 x 24 x 56.8	15" -brake					
2.5 i AWD	07/12→	669700 127 / 173	Tok		2576001	[+] 25760 16.7		Ake		2427101	[+] 24271 14.7	
			Tok		82502900			Ake		82518100		
					92139500	ø 294 x 24 x 56.7	16" -brake			92200000	ø 286 x 10 x 63	
				PRO	92094603	ø 276.5 x 24 x 56.8	15" -brake					
LEGACY V Kombi (BM, BR) 09/09→ → LEGACY V Estate (BM, BR), Page 1088												
LEGACY Mk II (BD, BG) 09/94→03/99 → LEGACY II (BD, BG), Page 1086												
LEGACY Mk III (BE, BH) 10/98→08/03 → LEGACY III (BE, BH), Page 1086												
LEGACY Mk III Estate (BE, BH) 12/98→08/03 → LEGACY III Estate (BE, BH), Page 1087												
LEGACY Mk III Kombi (BE, BH) 12/98→08/03 → LEGACY III Estate (BE, BH), Page 1087												
LEGACY OUTBACK (BG) 01/96→12/99												
2.5	01/96→12/99	669800 110 / 150	Ake		2148201	[+] 21482 17	→05/96	Ake		2170301	[+] 21703 15	
			Ake		2355802	[+] 23558 17	06/96→			82060800		
			Ake		82501700		06/96→			92082000	ø 265.5 x 10 x 67.4	
				PRO	92094603	ø 276.5 x 24 x 56.8				91055400	ø 170 x 32	
										97035800		
LIBERO Bus (E10, E12) 08/86→02/00												
1.2 4WD (E12, KJ8)	08/86→02/00	669900 38 / 52	Sum		2095802	[–] 20958 16				91040900	ø 180 x 31	
					92048800	ø 212 x 18 x 36.5						
1.2 i 4WD (E12, FA)	08/91→02/00	670000 40 / 54	Sum		2095802	[–] 20958 16	→07/94			91050800	ø 180 x 31	
			Ben		2429201	[+] 24292 14.8	07/94→					
LIBERTY II (BD, BG) 09/94→03/99 → LEGACY II (BD, BG), Page 1086												
LIBERTY III (BE, BH) 10/98→08/03 → LEGACY III (BE, BH), Page 1086												
LIBERTY III Estate (BE, BH) 12/98→08/03 → LEGACY III Estate (BE, BH), Page 1087												
LIBERTY III Kombi (BE, BH) 12/98→08/03 → LEGACY III Estate (BE, BH), Page 1087												
LIBERTY III Saloon (BE, BH) 10/98→08/03 → LEGACY III (BE, BH), Page 1086												
LIBERTY III Stufenheck (BE, BH) 10/98→08/03 → LEGACY III (BE, BH), Page 1086												
LIBERTY IV (BL, BP) 09/03→12/09 → LEGACY IV, Page 1087												
LIBERTY IV Estate (BL, BP, B13_) 09/03→12/09 → LEGACY IV Estate (BL, BP, B13_), Page 1088												
LIBERTY IV Kombi (BL, BP, B13_) 09/03→12/09 → LEGACY IV Estate (BL, BP, B13_), Page 1088												
LIBERTY IV Saloon (BL, BP) 09/03→12/09 → LEGACY IV, Page 1087												
LIBERTY IV Stufenheck (BL, BP) 09/03→12/09 → LEGACY IV, Page 1087												
LIBERTY V (BM, BR) 09/09→ → LEGACY V, Page 1088												
LIBERTY V Estate (BM, BR) 09/09→ → LEGACY V Estate (BM, BR), Page 1088												
LIBERTY V Kombi (BM, BR) 09/09→ → LEGACY V Estate (BM, BR), Page 1088												
LIBERTY V Saloon (BM, BR) 09/09→ → LEGACY V, Page 1088												
LIBERTY V Stufenheck (BM, BR) 09/09→ → LEGACY V, Page 1088												
LIBERTY OUTBACK (BE, BH) 10/00→08/03 → OUTBACK (BE, BH), Page 1090												
LIBERTY OUTBACK (BG) 01/96→12/99 → LEGACY OUTBACK (BG), Page 1089												
LIBERTY OUTBACK Estate (BE, BH) 10/00→08/03 → OUTBACK (BE, BH), Page 1090												

30 kW / hp

LIBERTY OUTBACK Estate (BG) 01/96→12/99 → LEGACY OUTBACK (BG), Page 1089

LIBERTY OUTBACK Kombi (BE, BH) 10/00→08/03 → OUTBACK (BE, BH), Page 1090

LIBERTY OUTBACK Kombi (BG) 01/96→12/99 → LEGACY OUTBACK (BG), Page 1089

OUTBACK (BE, BH) 10/00→08/03

2.5	10/00→08/03	670100 115 / 156	Ake		2355802	[+] 23558 17		Ake		2357202	[+] 23572 13.8
			Ake		82501700			Ake		82502600	
					92139500	ø 294 x 24 x 56.7				92158800	ø 290 x 10 x 67.5
				PRO	92094603	ø 276.5 x 24 x 56.8					
3.0 H6	10/00→08/03	670200 154 / 209	Ake		2355802	[+] 23558 17		Ake		2357202	[+] 23572 13.8
			Ake		82501700			Ake		82502600	
					92139500	ø 294 x 24 x 56.7				92158800	ø 290 x 10 x 67.5

OUTBACK (BL, BP) 09/03→09/09

2.0	09/03→10/05	670300 101 / 137	Tok		2386501	[+] 23865 16.4		Ake		2427101	[+] 24271 14.7
			Ake		82503600			Ake		82502600	
				PRO	92094603	ø 276.5 x 24 x 56.8				92167800	ø 274 x 10 x 67.5
										91080400	ø 169.8 x 36
2.0 D 2.5	09/08→09/09 09/08→09/09	670400 110 / 150 127 / 173	Tok		2386501	[+] 23865 16.4		Ake		2427101	[+] 24271 14.7
			Ake		82503600			Ake		82502600	
				PRO	92094603	ø 276.5 x 24 x 56.8				92200000	ø 286 x 10 x 63
2.5	11/03→09/09	670500 121 / 165	Ake		2355802	[+] 23558 17	Akebono	Ake		2427101	[+] 24271 14.7
			Tok		2386501	[+] 23865 16.4	Tokico	Ake		82502600	
			Tok		82502900		Tokico			92167800	ø 274 x 10 x 67.5
			Ake		82503600		Akebono			91080400	ø 169.8 x 36
					92139500	ø 294 x 24 x 56.7					
3.0 All-wheel Drive AWD	11/03→09/09	670600 180 / 245	Ake		2422201	[+] 24222 18		Ake		2357202	[+] 23572 13.8
					92139500	ø 294 x 24 x 56.7		Ake		82502600	
									PRO	92173603	ø 290 x 18 x 67.4
										91080400	ø 169.8 x 36

OUTBACK (BM, BR) 09/09→

2.0 D	09/09→	670700 110 / 150	Tok		2386501	[+] 23865 16.4	→04/10	Ake		2427101	[+] 24271 14.7
			Tok		2576001	[+] 25760 16.7	04/10→	Ake		82502600	
			Ake		82501700					92200000	ø 286 x 10 x 63
					92139500	ø 294 x 24 x 56.7					
2.0 D	01/13→	670800 108 / 147	Tok		2386501	[+] 23865 16.4		Ake		2427101	[+] 24271 14.7
			Tok		82502900					92200000	ø 286 x 10 x 63
					92139500	ø 294 x 24 x 56.7					
2.5 i	09/09→	670900 123 / 167	Tok		2386501	[+] 23865 16.4	→04/10	Ake		2427101	[+] 24271 14.7
			Tok		2576001	[+] 25760 16.7	04/10→	Ake		82502600	
			Tok		82502900		16" -brake			92200000	ø 286 x 10 x 63
			Ake		82503600						
					92139500	ø 294 x 24 x 56.7	16" -brake				
				PRO	92236503	ø 315.5 x 30 x 56.9	17" -brake				

R - S

		kW / hp										
OUTBACK (BM, BR) 09/09→												
		671000	Tok		2386501	[+] 23865 16.4	⊕ EU	Ake		2427101	[+] 24271 14.7	
2.5 i AWD	01/13→	127 / 173	Tok		2576001	[+] 25760 16.7	⊖ EU			92200000	ø 286 x 10 x 63	
			Tok		82502900		16" -brake					
			Ake		82503600		17" -brake					
					92139500	ø 294 x 24 x 56.7	16" -brake					
				PRO	92236503	ø 315.5 x 30 x 56.9	17" -brake					
		671100	Ake		2422201	[+] 24222 18		NBK		2485401	[+] 24854 16	
3.6 R	09/09→	191 / 260	Ake		82503600			Ake		82502600		
				PRO	92236503	ø 315.5 x 30 x 56.9						
OUTBACK Estate (BL, BP) 09/03→09/09 → OUTBACK (BL, BP), Page 1090												
OUTBACK Estate (BM, BR) 09/09→ → OUTBACK (BM, BR), Page 1090												
OUTBACK Kombi (BL, BP) 09/03→09/09 → OUTBACK (BL, BP), Page 1090												
OUTBACK Kombi (BM, BR) 09/09→ → OUTBACK (BM, BR), Page 1090												
SUMO Bus (E10, E12) 08/86→02/00 → LIBERO Bus (E10, E12), Page 1089												
TREZIA 03/11→												
		671200	Ake		2433601	[–] 24336 17.5		Ake		2461001	[+] 24610 14.3	⊕ rear disc brake
1.3	03/11→	73 / 99	Ake		82074400			Ake		82509700		⊕ rear disc brake
1.4 D	03/11→	66 / 90			92199300	ø 275 x 22 x 46.5				91076900	ø 228.6 x 37	⊕ rear drum brake
				PRO					PRO	92224003	ø 259 x 9 x 30.4	⊕ rear disc brake
										97034800		⊕ rear drum brake
TRIBECA (B9) 01/05→												
		671300	Ake		2422201	[+] 24222 18		NBK		2485401	[+] 24854 16	
3.0	01/05→	184 / 250										
3.0	10/06→	180 / 245	Ake		82503600					82505300		
3.6	09/07→	190 / 258										
3.6	01/12→	188 / 256		PRO	92199203	ø 316 x 30 x 56.5				91073900	ø 210 x 40	
VANILLE Autobus/Autocar (E10, E12) 08/86→02/00 → LIBERO Bus (E10, E12), Page 1089												
VANILLE Bus (E10, E12) 08/86→02/00 → LIBERO Bus (E10, E12), Page 1089												
XV 03/12→												
		671400	Tok		2576001	[+] 25760 16.7		Ake		2427101	[+] 24271 14.7	
1.6 i	03/12→	84 / 114										
2.0 D	03/12→	80 / 109	Tok		82502900			Ake		82518100		
2.0 D	03/12→	108 / 147										
2.0 i	03/12→	110 / 150			92139500	ø 294 x 24 x 56.7			PRO	92262003	ø 274 x 10 x 62	
										91080500	ø 169.8 x 35	
XV CROSSTREK 03/12→ → XV, Page 1091												

		kW / hp										
AERIO (ER) 10/01→ → LIANA (ER), Page 1096												
AERIO Estate (ER) 07/01→12/07 → LIANA Estate (ER), Page 1096												
AERIO Kombi (ER) 07/01→12/07 → LIANA Estate (ER), Page 1096												
AERIO Ranchera familiar (ER) 07/01→12/07 → LIANA Estate (ER), Page 1096												
ALTO III (EF) 09/94→06/02												
		671500	Sum		2133301	[+] 21333 15				91067700	ø 180 x 31	
1.0	09/94→06/02	39 / 53			82044500					97013400		
1.0	01/00→06/02	43 / 58			92069000	ø 231 x 17 x 50						
					94026000	ø 180 x 40						
		671600	Ake		2379501	[+] 23795 15				91039001	ø 200 x 32	
1.3	10/98→09/00	63 / 86										

R - S

		kW / hp										
ALTO III (EF) 09/94→06/02												
1.3	10/98→09/00	671600 63 / 86		92093200	ø 235 x 20 x 49.5			94026300	ø 200 x 40	
1.6	10/98→09/00	671700 71 / 97	Sum	2340001	[+] 23400 16.5	→01/99		91039001	ø 200 x 32	
			Ake	2379501	[+] 23795 15	02/99→		94026300	ø 200 x 40	
				92093200	ø 235 x 20 x 49.5					
ALTO IV (FF) 06/02→12/08												
1.1	06/02→12/08	671800 46 / 63	Sum	2350701	[+] 23507 15			91067700	ø 180 x 31	
			Sum	82076700				97013400		
				92113300	ø 231 x 17 x 49			94032500	ø 180 x 34.5	
ALTO V (GF) 01/09→												
1.0	01/09→	671900 50 / 68	Sum	2350801	[+] 23508 17			91075200	ø 180 x 26	
			Bos	82514000						
				92204100	ø 231 x 20 x 51.4					
ALTO Mk III (EF) 09/94→06/02 → ALTO III (EF), Page 1091												
ALTO Mk IV (FF) 06/02→12/08 → ALTO IV (FF), Page 1092												
BALENO (EG) 07/95→05/02												
1.3	09/96→05/02	672000 52 / 71	Sum	2340001	[+] 23400 16.5	→01/97	Ake	2155901	[–] 21559 12.5	⊕ rear disc brake
1.3 i 16V	07/95→05/02	63 / 85								
1.6 i 16V	07/95→05/02	72 / 98	Ake	2379501	[+] 23795 15	02/97→	Ake	82051600		⊕ rear disc brake
1.6 i 16V 4x4	07/95→05/02	72 / 98	Ake	82501600		02/97→		91039001	ø 200 x 32	⊕ rear drum brake
			Sum	82510000		→01/97		97016400		
				92093200	ø 235 x 20 x 49.5			92153300	ø 240 x 10 x 33	⊕ rear disc brake
								94026300	ø 200 x 40	
1.8 GTX	03/96→05/02	672100 89 / 121	Sum	2340001	[+] 23400 16.5	→01/97	Ake	2155901	[–] 21559 12.5	
1.8 i 4x4	03/96→05/02	89 / 121	Ake	2379501	[+] 23795 15	02/97→	Ake	82051600		
			Ake	82501600		02/97→		92153300	ø 240 x 10 x 33	
			Sum	82510000		→01/97				
				92104500	ø 246 x 20 x 50					
1.9 TD	04/98→05/02	672200 55 / 75	Ake	2379501	[+] 23795 15		Ake	2155901	[–] 21559 12.5	
			Ake	82501600			Ake	82051600		
				92093200	ø 235 x 20 x 49.5			92153300	ø 240 x 10 x 33	
BALENO Estate (EG) 08/96→05/02												
1.3 16V	03/97→05/02	672300 63 / 86	Ake	2379501	[+] 23795 15		Ake	2155901	[–] 21559 12.5	⊕ rear disc brake
			Ake	82501600			Ake	82051600		⊕ rear disc brake
				92093200	ø 235 x 20 x 49.5			91039001	ø 200 x 32	⊕ rear drum brake
								97016400		
								92153300	ø 240 x 10 x 33	⊕ rear disc brake
								94026300	ø 200 x 40	
1.6 i 16V	08/96→05/02	672400 72 / 98	Sum	2340001	[+] 23400 16.5	→01/97	Ake	2155901	[–] 21559 12.5	⊕ rear disc brake
1.6 i 16V 4x4	08/96→05/02	72 / 98								
1.6 i 16V 4x4	08/96→05/02	73 / 99	Ake	2379501	[+] 23795 15	02/97→	Ake	82051600		⊕ rear disc brake
			Ake	82501600		02/97→		91039001	ø 200 x 32	⊕ rear drum brake
			Sum	82510000		→01/97		97016400		
				92093200	ø 235 x 20 x 49.5			92153300	ø 240 x 10 x 33	⊕ rear disc brake
								94026300	ø 200 x 40	→10/01

BALENO Estate (EG) 08/96→05/02

672500													
1.6 i 16V	08/96→05/02	73 / 99	Sum		2340001	[+] 23400 16.5	→01/97	Ake		2155901	[–] 21559 12.5	⊕ rear disc brake
			Ake		2379501	[+] 23795 15	02/97→	Ake		82051600		⊕ rear disc brake
			Ake		82501600		02/97→	Bos		91064500	ø 200 x 32	⊕ rear drum brake
			Sum		82510000		→01/97			92153300	ø 240 x 10 x 33	⊕ rear disc brake
					92104500	ø 246 x 20 x 50				94026300	ø 200 x 40	⊕ rear drum brake
672600													
1.8 i 16V	08/96→05/02	89 / 121	Sum		2340001	[+] 23400 16.5	→01/97	Ake		2155901	[–] 21559 12.5	
1.8 i 16V 4x4	08/96→05/02	89 / 121	Ake		2379501	[+] 23795 15	02/97→	Ake		82051600		
			Ake		82501600		02/97→			92153300	ø 240 x 10 x 33	
			Sum		82510000		→01/97					
					92104500	ø 246 x 20 x 50						
672700													
1.9 TD	04/98→05/02	55 / 75	Ake		2379501	[+] 23795 15		Ake		2155901	[–] 21559 12.5	
			Ake		82501600			Ake		82051600		
					92093200	ø 235 x 20 x 49.5				92153300	ø 240 x 10 x 33	

BALENO Hatchback (EG) 07/95→05/02

672800													
1.3	09/96→05/02	52 / 71	Sum		2340001	[+] 23400 16.5	→01/97	Ake		2155901	[–] 21559 12.5	⊕ rear disc brake	
1.3 i 16V	07/95→05/02	63 / 85	Ake		2379501	[+] 23795 15	02/97→	Ake		82051600		⊕ rear disc brake	
1.6 i 16V	07/95→05/02	72 / 98	Ake		82501600		02/97→			91039001	ø 200 x 32	⊕ rear drum brake	
1.6 i 16V 4x4	07/95→05/02	72 / 98	Sum		82510000		→01/97			97016400			
					92093200	ø 235 x 20 x 49.5				92153300	ø 240 x 10 x 33	⊕ rear disc brake	
										94026300	ø 200 x 40		
672900													
1.8 GTX	03/96→05/02	89 / 121	Sum		2340001	[+] 23400 16.5	→01/97	Ake		2155901	[–] 21559 12.5		
1.8 i 4x4	03/96→05/02	89 / 121	Ake		2379501	[+] 23795 15	02/97→	Ake		82051600			
			Ake		82501600		02/97→			92153300	ø 240 x 10 x 33		
			Sum		82510000		→01/97						
					92104500	ø 246 x 20 x 50							
673000													
1.9 TD	04/98→05/02	55 / 75	Ake		2379501	[+] 23795 15		Ake		2155901	[–] 21559 12.5		
			Ake		82501600			Ake		82051600			
					92093200	ø 235 x 20 x 49.5				92153300	ø 240 x 10 x 33		

BALENO Kombi (EG) 08/96→05/02 → BALENO Estate (EG), Page 1092

BALENO Saloon (EG) 07/95→05/02 → BALENO (EG), Page 1092

BALENO Schrägheck (EG) 07/95→05/02 → BALENO Hatchback (EG), Page 1093

BALENO Stufenheck (EG) 07/95→05/02 → BALENO (EG), Page 1092

CARRY Box (FD) 02/99→

673100													
1.3	03/99→	58 / 79	Sum		2350701	[+] 23507 15				91042300	ø 220 x 36		
1.3 16 V	03/00→	58 / 79	Sum		82076700					97013600			
1.3 4x4	02/99→09/04	56 / 76		PRO	92179103	ø 231 x 17 x 44				94037800	ø 220 x 54		

CARRY Kasten (FD) 02/99→ → CARRY Box (FD), Page 1093

CARRY Pickup (FD) 10/00→07/05

673200													
1.3 4x4	10/00→07/05	58 / 79	Sum		2350701	[+] 23507 15				91042300	ø 220 x 36		
			Sum		82076700					97013600			
										94037800	ø 220 x 54		

CARRY Pick-up (FD) 10/00→07/05 → CARRY Pickup (FD), Page 1093

CULTUS II Fastback (EA, MA) 03/89→12/05 → SWIFT II Hatchback (EA, MA), Page 1097

R - S

		kW / hp														
CULTUS II Hatchback (EA, MA) 03/89→12/05 → SWIFT II Hatchback (EA, MA), Page 1097																
CULTUS II Schrägheck (EA, MA) 03/89→12/05 → SWIFT II Hatchback (EA, MA), Page 1097																
CULTUS II Stufenheck (AH, AJ) 03/89→05/01 → SWIFT II Saloon (AH, AJ), Page 1097																
ESCUDO II (JT) 04/05→ → GRAND VITARA II (JT), Page 1094																
ESCUDO Cabrio (ET, TA) 07/90→10/02 → VITARA Cabrio (ET, TA), Page 1100																
ESCUDO Veículo todo terreno aberto (ET, TA) 07/90→10/02 → VITARA Cabrio (ET, TA), Page 1100																
ESTEEM (EG) 07/95→05/02 → BALENO (EG), Page 1092																
ESTEEM Estate (EG) 08/96→05/02 → BALENO Estate (EG), Page 1092																
ESTEEM Kombi (EG) 08/96→05/02 → BALENO Estate (EG), Page 1092																
GRAND ESCUDO I (FT, GT) 03/98→09/05 → GRAND VITARA I (FT, GT), Page 1094																
GRAND ESCUDO II (JT) 04/05→ → GRAND VITARA II (JT), Page 1094																
GRAND VITARA (INC XL-7) I (FT, GT) 03/98→09/05 → GRAND VITARA I (FT, GT), Page 1094																
GRAND VITARA I (FT, GT) 03/98→09/05																
		673300	Ake		2190701	[+] 21907 15.4					91057600	ø 220 x 40	
1.6	03/98→07/03	69 / 94											
2.0 4x4	03/98→07/03	94 / 128	Sum		2331401	[+] 23314 14.5					97032900		
			Ake		82052600								
					92136800	ø 286 x 17 x 28.9							
				PRO	92170503	ø 310 x 22 x 29.5							
		673400	Ake		2190701	[+] 21907 15.4					91057600	ø 220 x 40	
1.6 4x4	02/00→09/02	73 / 99											
					92136800	ø 286 x 17 x 28.9					97032900		
		673500	Sum		2331401	[+] 23314 14.5					91057600	ø 220 x 40	
2.0 HDI 110	07/01→09/05	80 / 109											
2.0 TD	03/98→07/03	64 / 87											
2.0 TD 4x4	04/00→09/05	63 / 86	Ake		82052600						97032900		
2.5 V6 24V	04/01→07/03	116 / 158											
2.5 V6 24V (FT)	04/98→07/03	106 / 144		PRO	92170503	ø 310 x 22 x 29.5							
2.7 4x4	04/03→07/03	135 / 184											
		673600	Ake		2430101	[–] 24301 16.4					91057600	ø 220 x 40	
2.0 HDI 110 16V	07/01→09/05	80 / 109											
			Sum		2331401	[+] 23314 14.5					97032900		
			Ake		82052600								
				PRO	92170503	ø 310 x 22 x 29.5							
		673700	Sum		2331401	[+] 23314 14.5					97032900		
2.7 4x4	09/01→07/03	127 / 173											
			Ake		82052600								
				PRO	92170503	ø 310 x 22 x 29.5							
GRAND VITARA II (JT) 04/05→																
		673800	Tok		2434601	[+] 24346 17					91068700	ø 254 x 41	
1.6 All-wheel Drive	04/05→	78 / 106											
1.6 All-wheel Drive	09/05→	73 / 99											
1.9 DDiS	10/05→	95 / 129			92156500	ø 295 x 25 x 49					97032900		
2.0 All-wheel Drive	10/05→	103 / 140											
		673900	Tok		2434601	[+] 24346 17			Ake		2487101	[+] 24871 13.8	
2.4 All-wheel Drive	01/09→	122 / 166											
2.4 All-wheel Drive	01/09→	124 / 169											
3.2 All-wheel Drive	01/09→	171 / 233			92156500	ø 295 x 25 x 49					92222200	ø 308 x 16 x 57	
											91077000	ø 200 x 37	
GRAND VITARA XL-7 I (FT, GT) 03/98→09/05 → GRAND VITARA I (FT, GT), Page 1094																
GRAND VITARA XL-7 II (JT) 04/05→ → GRAND VITARA II (JT), Page 1094																
IGNIS (FH) 10/00→12/05																
		674000	Sum		2350701	[+] 23507 15			NBK		2404001	[+] 24040 14.4	
1.3	10/00→09/03	61 / 83											
			Sum		82076700				NBK		82510800		
					92131200	ø 257 x 17 x 49.3					91058500	ø 180 x 26	
											97013400		
											94032500	ø 180 x 34.5	
		674100	Sum		2350701	[+] 23507 15			NBK		2404001	[+] 24040 14.4	⊕ ABS
1.3 4WD	10/00→09/03	61 / 83											

		kW / hp										
IGNIS (FH) 10/00→12/05												
674100			Bos		**2360501**	[+] 23605 15.5				**91065200**	ø 200 x 29	⊖ ABS
1.3 4WD	10/00→09/03	61 / 83		PRO	**92135303**	ø 253 x 17 x 49.1						
674200			Sum		**2350701**	[+] 23507 15						
1.5	08/03→12/05	83 / 113										
IGNIS II 09/03→												
674300			Sum		**2350701**	[+] 23507 15				**91065200**	ø 200 x 29	
1.3	09/03→	69 / 94										
1.3 4x4	09/03→	69 / 94	Bos		**2360501**	[+] 23605 15.5				**84065200**	bore ø 15.9 ø 200 x 29	
1.3 DDiS	09/03→	51 / 70										
1.5	09/03→	73 / 99										
1.5 4x4	09/03→	73 / 99	Sum		**82076700**							
				PRO	**92135303**	ø 253 x 17 x 49.1						
674400			Sum		**2350701**	[+] 23507 15			NBK	**2404001**	[+] 24040 14.4	⊕ sports susp.
1.5 Sport	12/03→	80 / 109	Sum		**82076700**				NBK	**82510800**		⊕ sports susp.
					92131200	ø 257 x 17 x 49.3				**91065200**	ø 200 x 29	⊖ sports susp.
										84065200	bore ø 15.9 ø 200 x 29	⊖ sports susp.
JIMNY (FJ) 09/98→07/04												
674500			Sum		**2114202**	[–] 21142 15.5				**91042300**	ø 220 x 36	
0.7	09/00→07/04	47 / 64		PRO	**92066003**	ø 289 x 10 x 45.7				**97013600**		
0.7 4x4	09/98→07/04	47 / 64								**94037800**	ø 220 x 54	
1.0	09/98→10/03	39 / 53										
674600			Sum		**2114202**	[–] 21142 15.5				**91042300**	ø 220 x 36	
1.3	08/04→	63 / 86			**92237300**	ø 289.6 x 10 x 46	JSAFJB43V00203805→			**94037800**	ø 220 x 54	
				PRO	**92066003**	ø 289 x 10 x 45.7	→JSAFJB43V00203804					
674700			Sum		**2114202**	[–] 21142 15.5				**91042300**	ø 220 x 36	
1.3 16V	09/98→	59 / 80										
1.3 16V 4WD	09/98→	59 / 80	Ake		**82501600**					**97013600**		
					92237300	ø 289.6 x 10 x 46	MY 2005→ 00203805→			**94037800**	ø 220 x 54	⊕ J-made →MY 1999 ⊕ E-made →MY 2004
				PRO	**92066003**	ø 289 x 10 x 45.7	→MY 2004 →00203804					
674800			Sum		**2114202**	[–] 21142 15.5				**91042300**	ø 220 x 36	
1.3 16V	02/01→	60 / 82										
1.3 16V 4WD	02/01→	60 / 82	Ake		**82501600**					**97013600**		
					92237300	ø 289.6 x 10 x 46	MY 2005→			**94037800**	ø 220 x 54	⊕ J-made ⊕ E-made →MY 2004
				PRO	**92066003**	ø 289 x 10 x 45.7	→MY 2004					
674900			Sum		**2114202**	[–] 21142 15.5				**91042300**	ø 220 x 36	
1.3 16V 4x4	08/05→	63 / 86	Ake		**82501600**					**97013600**		
					92237300	ø 289.6 x 10 x 46				**94037800**	ø 220 x 54	⊕ J-made
675000			Sum		**2114202**	[–] 21142 15.5				**91042300**	ø 220 x 36	
1.3 4x4	09/98→08/00	63 / 86										
1.3 4x4	09/00→08/02	65 / 88	Ake		**82501600**					**97013600**		
				PRO	**92066003**	ø 289 x 10 x 45.7				**94037800**	ø 220 x 54	
675100			Ake		**2190701**	[+] 21907 15.4				**91042300**	ø 220 x 36	
1.5 DDiS 4WD	12/03→	48 / 65	Ake		**82501600**					**97013600**		
			Tok		**82519200**					**94037800**	ø 220 x 54	⊕ J-made ⊕ E-made →MY 2004
					92076400	ø 287 x 17 x 46	→MY 2004					
675200			Ake		**2190701**	[+] 21907 15.4				**91042300**	ø 220 x 36	
1.5 DDiS 4x4	08/05→	63 / 86	Ake		**82501600**					**97013600**		
			Tok		**82519200**					**94037800**	ø 220 x 54	⊕ J-made
JIMNY (SJ) 11/88→12/04 → SAMURAI (SJ), Page 1096												

		kW / hp											
KIZASHI (FR) 10/10→													
		675300	Ake		**2520201**	[+] 25202 16.8		Ake		**2171901**	[+] 21719 14.6	
2.4	10/10→	131 / 178										
2.4	10/10→	134 / 182										
2.4	04/12→	138 / 188										
2.4 4WD	04/12→	138 / 188										
2.4 4x4	10/10→	131 / 178										
LANDY (SC25) 01/07→12/09													
		675400	Tok		**2422701**	[+] 24227 16.5		Ake		**2387101**	[+] 23871 13.8	
2.0	01/07→12/09	102 / 139										
2.0 4WD	01/07→12/09	96 / 131										
LIANA (ER) 10/01→													
		675500	NBK		**2381701**	[+] 23817 17				**91039001**	ø 200 x 32	
1.3	03/02→	66 / 90										
1.4 DDiS	04/04→	66 / 90										
1.6	03/02→	76 / 103	NBK		**82511200**					**97016400**		
1.6	01/05→	79 / 107										
1.6 4WD	03/02→	76 / 103			**92104500**	ø 246 x 20 x 50				**94026300**	ø 200 x 40	
1.6 4WD	04/02→	78 / 106										
1.6 4WD	01/05→12/07	79 / 107										
1.6 i	04/02→	78 / 106										
1.8 i	10/01→	92 / 125										
		675600	Ake		**2483001**	[+] 24830 15.5						
2.3	04/04→	114 / 155										
LIANA Estate (ER) 07/01→12/07													
		675700	NBK		**2381701**	[+] 23817 17				**91039001**	ø 200 x 32	
1.3	07/01→12/07	66 / 90										
1.4 DDiS	04/04→12/07	66 / 90										
1.6	07/01→12/07	76 / 103	NBK		**82511200**					**97016400**		
1.6	01/05→12/07	79 / 107										
1.6 4WD	07/01→12/07	76 / 103			**92104500**	ø 246 x 20 x 50				**94026300**	ø 200 x 40	
1.6 4WD	04/02→12/07	78 / 106										
1.6 4WD	01/05→12/07	79 / 107										
1.6 i	04/02→12/07	78 / 106										
1.8 i	10/01→12/07	92 / 125										
LIANA Kombi (ER) 07/01→12/07 → LIANA Estate (ER), Page 1096													
LIANA Saloon (ER) 10/01→ → LIANA (ER), Page 1096													
LIANA Stufenheck (ER) 10/01→ → LIANA (ER), Page 1096													
SAMURAI (SJ) 11/88→12/04													
		675800	Sum		**2114202**	[–] 21142 15.5	Sumitomo			**91041200**	ø 220 x 40	
1.0 All-wheel Drive (SJ 410)	11/88→12/04	33 / 45										
1.3 (SJ 413)	11/88→12/04	47 / 64	Luc		**2466301**	[–] 24663 14	Lucas	Luc		**84041200**	bore ø 22.2 ø 228.6 x 42	
1.3 All-wheel Drive	01/00→12/04	59 / 80										
1.3 All-wheel Drive (SJ 413)	11/88→12/04	44 / 60										
1.3 All-wheel Drive (SJ 413)	11/88→12/04	51 / 70			**92036600**	ø 289 x 10 x 46						
		675900	Luc		**2466301**	[–] 24663 14	Lucas			**91033800**	ø 228.6 x 40	
1.9 D	09/00→12/04	46 / 63										
					92036600	ø 289 x 10 x 46						
		676000	Sum		**2114202**	[–] 21142 15.5	Sumitomo			**91033800**	ø 228.6 x 40	
1.9 TD	11/98→12/04	46 / 63										
1.9 TD	11/98→12/04	47 / 64	Luc		**2466301**	[–] 24663 14	Lucas					
					92036600	ø 289 x 10 x 46						
S-Cross 08/13→ → SX4 S-Cross, Page 1100													
SIERRA (SJ) 11/88→12/04 → SAMURAI (SJ), Page 1096													
SIERRA II Pickup (SJ) 12/88→02/00													
		676100	Sum		**2114202**	[–] 21142 15.5	Sumitomo			**91041200**	ø 220 x 40	
All-wheel Drive	12/88→02/00	33 / 45										
			Luc		**2466301**	[–] 24663 14	Lucas	Luc		**84041200**	bore ø 22.2 ø 228.6 x 42	
					92036600	ø 289 x 10 x 46						
SIERRA II Pick-up (SJ) 12/88→02/00 → SIERRA II Pickup (SJ), Page 1096													
SIERRA Geländewagen offen (SJ) 01/89→07/99 → SIERRA Open Off-Road Vehicle (SJ), Page 1096													
SIERRA Open Off-Road Vehicle (SJ) 01/89→07/99													
		676200	Ate		**2133601**	[–] 21336 15						
1.3	01/89→07/99	51 / 69										
					92036600	ø 289 x 10 x 46						
SPLASH 01/08→													
		676300	Luc		**2397302**	[+] 23973 17.3		Bos		**91064500**	ø 200 x 32	
1.0	01/08→	48 / 65										
1.0	06/11→	50 / 68	Luc		**82075700**			Bos		**97032000**		
1.2	01/08→	63 / 86										
1.2 VVT	09/10→	69 / 94										
1.2 VVT	06/11→	66 / 90		PRO	**92148903**	ø 252 x 20 x 40		Bos		**84064502**	bore ø 19 ø 200 x 32	
1.2 VVT	08/12→	67 / 91										
1.3 CDTI	01/08→	55 / 75										

		kW / hp											
SUPER CARRY Bus (ED) 10/85→03/99													
		676400	Sum		2073101	[–] 21731 15.2	⊕ rim 4 hole			91041300	ø 220 x 40	
1.0	10/92→03/99	31 / 42										
1.0	09/94→03/99	30 / 41	Sum		2114202	[–] 21142 15.5	⊕ rim 5 hole					
1.0 (SK)	10/85→03/99	33 / 45										
			Ake		2330301	[–] 23303 15.2						
					92036600	ø 289 x 10 x 46	⊕ rim 5 hole					
					92043800	ø 215 x 10 x 33	⊕ rim 4 hole					
SWIFT II Hatchback (EA, MA) 03/89→12/05													
		676500	Ake		2173001	[o] 21730 14	⊕ EA			91042600	ø 180 x 26	⊕ EA ⊕ MA ⊖ ABS
1.0 (SF310, AA44)	03/89→05/01	37 / 50										
1.0 i (SF310, AA44)	01/95→12/05	39 / 53	Sum		2133301	[+] 21333 15	⊕ MA →320339			91074800	ø 200 x 32	⊕ MA ⊕ ABS
1.3 (SF413, AB35)	03/89→05/01	50 / 68										
1.3 4WD (SF413, AA35)	03/89→05/01	50 / 68	Bos		2329601	[+] 23296 15	⊕ MA 320340→			94032600	ø 200 x 40	⊕ MA 06/96→ ⊕ ABS
1.3 GTi (SF413, AA34)	03/89→05/01	74 / 101										
					82044500		⊕ MA →320339			94019300	ø 180,0 x 36	⊕ EA ⊕ MA →06/96
			Ake		82501600		⊕ EA					⊕ MA 06/96→ ⊖ ABS
					92069000	ø 231 x 17 x 50	⊕ MA					
		676600	Sum		2133301	[+] 21333 15	→320339			91042600	ø 180 x 26	⊖ ABS
1.3	06/01→12/03	63 / 86										
			Bos		2329601	[+] 23296 15	320340→			91074800	ø 200 x 32	⊕ ABS
					82044500		→320339			94032600	ø 200 x 40	⊕ ABS
					92069000	ø 231 x 17 x 50				94019300	ø 180,0 x 36	⊖ ABS
SWIFT II Saloon (AH, AJ) 03/89→05/01													
		676700	Ake		2173001	[o] 21730 14	W 109.3 mm →12/97			91039001	ø 200 x 32	⊕ rear drum brake ⊕ ABS
1.3 (SF413, AH35, MA)	03/89→05/01	50 / 68										
			Sum		2133301	[+] 21333 15	W 107 mm →12/97			91042600	ø 180 x 26	⊕ rear drum brake
			Bos		2329601	[+] 23296 15	01/97→			97016400		⊕ rear drum brake ⊕ ABS
					82044500		W 107 mm →12/97			94032600	ø 200 x 40	⊕ rear drum brake
					92069000	ø 231 x 17 x 50						
		676800	Ake		2134401	[+] 21344 16	→12/97			91039001	ø 200 x 32	⊕ rear drum brake ⊕ ABS
1.6 i (SF416, AH14)	01/90→05/01	68 / 92										
1.6 i 4WD (SF416, AJ14)	01/90→05/01	68 / 92	Bos		2329601	[+] 23296 15	01/97→			91042600	ø 180 x 26	⊕ rear drum brake
					92069100	ø 250 x 18.5 x 47				97016400		⊕ rear drum brake ⊕ ABS
										94032600	ø 200 x 40	⊕ rear drum brake
SWIFT II Schrägheck (EA, MA) 03/89→12/05 → SWIFT II Hatchback (EA, MA), Page 1097													
SWIFT II Stufenheck (AH, AJ) 03/89→05/01 → SWIFT II Saloon (AH, AJ), Page 1097													
SWIFT III (MZ, EZ) 02/05→													
		676900	Luc		2397302	[+] 23973 17.3		Bos		91064500	ø 200 x 32	⊕ HU-made
1.3	02/05→	68 / 92										
1.3 DDiS	08/05→	51 / 69	Luc		82075700					91078600	ø 200 x 32	⊕ J-made
1.5	02/05→	75 / 102	Luc		82063300			Bos		84064502	bore ø 19 ø 200 x 32	⊕ HU-made
				PRO	92148903	ø 252 x 20 x 40						
		677000	Luc		2397302	[+] 23973 17.3				91039001	ø 200 x 32	⊕ J-made
1.3 4x4	02/05→	68 / 92										
			Luc		82075700			Bos		91064500	ø 200 x 32	⊕ HU-made
			Luc		82063300			Bos		84064502	bore ø 19 ø 200 x 32	
				PRO	92148903	ø 252 x 20 x 40				94026300	ø 200 x 40	⊕ J-made
		677100	Luc		2397302	[+] 23973 17.3				91039001	ø 200 x 32	⊕ J-made
1.3 4x4	01/06→	66 / 90										
			Luc		82075700			Bos		91064500	ø 200 x 32	
			Luc		82063300			Bos		84064502	bore ø 19 ø 200 x 32	⊕ HU-made
				PRO	92148903	ø 252 x 20 x 40				94026300	ø 200 x 40	⊕ J-made

		kW / hp											
SWIFT III (MZ, EZ) 02/05→													
		677200	Luc		**2397302**	[+] 23973 17.3		Bos		**91064500**	ø 200 x 32	⊕ HU-made
1.3 DDiS	08/05→	55 / 75	Luc		**82075700**					**91078600**	ø 200 x 32	⊕ J-made
			Luc		**82063300**			Bos		**84064502**	bore ø 19 ø 200 x 32	
				PRO	**92148903**	ø 252 x 20 x 40						
		677300	Luc		**2397302**	[+] 23973 17.3				**91039001**	ø 200 x 32	⊕ J-made
1.5 4x4	02/05→	74 / 101	Luc		**82075700**			Bos		**91064500**	ø 200 x 32	⊕ HU-made
			Luc		**82063300**					**94026300**	ø 200 x 40	⊕ J-made
				PRO	**92148903**	ø 252 x 20 x 40						
		677400	JiW		**2396302**	[+] 23963 15.5	⊕ J-made	Ake		**2171901**	[+] 21719 14.6	
1.6	05/06→	92 / 125	Luc		**2397302**	[+] 23973 17.3				**92222300**	ø 278 x 9 x 43.4	
			Luc		**82075700**							
				PRO	**92204703**	ø 276 x 20 x 40						
SWIFT IV (FZ, NZ) 10/10→													
		677500	Luc		**2428303**	[+] 24283 16.5				**2525801**	[+] 25258 14.3	⊕ rear disc brake
1.2	10/10→	66 / 90										
1.2	10/10→	69 / 94	Luc		**82512900**				PRO	**92231403**	ø 259 x 9 x 43.2	⊕ rear disc brake
1.2	08/12→	67 / 91										
1.2 4WD	08/12→	67 / 91		PRO	**92232803**	ø 256 x 22 x 40.1	⊖ cruise control		PRO	**92242303**	ø 259 x 9 x 43.4	⊕ rear disc brake
1.2 4x4	10/10→	66 / 90										
1.2 4x4	10/10→	69 / 94										
1.3 DDiS	10/10→	55 / 75		PRO	**92255303**	ø 272 x 22 x 40				**TPM0012**		
1.4	02/11→	70 / 95										
1.4	01/12→	75 / 100										
					TPM0012							
		677600	JiW		**2396201**	[+] 23962 15.5				**2525801**	[+] 25258 14.3	⊕ rear disc brake
1.6	01/12→	100 / 136	Luc		**2428303**	[+] 24283 16.5			PRO	**92231403**	ø 259 x 9 x 43.2	⊕ rear disc brake
			Luc		**82512900**				PRO	**92242303**	ø 259 x 9 x 43.4	⊕ rear disc brake
				PRO	**92232803**	ø 256 x 22 x 40.1	⊖ cruise control			**TPM0012**		
				PRO	**92255303**	ø 272 x 22 x 40						
					TPM0012							

SWIFT Mk II Hatchback (EA, MA) 03/89→12/05 → SWIFT II Hatchback (EA, MA), Page 1097

SWIFT Mk II Saloon (AH, AJ) 03/89→05/01 → SWIFT II Saloon (AH, AJ), Page 1097

SWIFT Mk II Schrägheck (EA, MA) 03/89→12/05 → SWIFT II Hatchback (EA, MA), Page 1097

SWIFT Mk II Stufenheck (AH, AJ) 03/89→05/01 → SWIFT II Saloon (AH, AJ), Page 1097

SX4 (GY) 06/06→													
		677700	Sum		**2163301**	[+] 21633 17	⊕ J-made	Ake		**2172001**	[+] 21720 14.6	
1.5	06/06→	73 / 99										
1.6 DDIS	04/07→	66 / 90	Hit		**2428001**	[+] 24280 16	⊕ J-made			**91067500**	ø 220 x 35	⊕ HU-made
1.9 DDiS	06/06→	88 / 120										
1.9 DDiS 4x4	06/06→	88 / 120	Luc		**2439101**	[+] 24391 16	⊕ HU-made ⊕ RUS-made	Bos		**97032000**		
			Luc		**82055900**		⊕ HU-made ⊕ RUS-made	Bos		**84067500**	bore ø 19 ø 220 x 35	
			Luc		**82506500**		⊕ HU-made ⊕ RUS-made			**92222300**	ø 278 x 9 x 43.4	⊕ J-made
					92156600	ø 280 x 22 x 47	⊕ HU-made					
					92222100	ø 279.8 x 22 x 47	⊕ J-made					
		677800	Sum		**2163301**	[+] 21633 17	⊕ J-made	Ake		**2172001**	[+] 21720 14.6	
1.5 VVT	07/10→	82 / 112										
1.6 VVT 4x4	07/09→	82 / 112	Hit		**2428001**	[+] 24280 16	⊕ J-made			**91067500**	ø 220 x 35	⊕ HU-made
2.0	01/10→	112 / 152										
2.0 16V 4x4	01/10→	112 / 152	Luc		**2439101**	[+] 24391 16	⊕ HU-made ⊕ RUS-made	Bos		**97032000**		
			Luc		**82055900**		⊕ HU-made ⊕ RUS-made			**92222300**	ø 278 x 9 x 43.4	⊕ J-made
			Luc		**82506500**		⊕ HU-made ⊕ RUS-made					
					92156600	ø 280 x 22 x 47	⊕ HU-made					

		kW / hp										
SX4 (GY) 06/06→												
		677800			**92222100**	ø 279.8 x 22 x 47	⊕ J-made					
1.5 VVT	07/10→	82 / 112										
1.6 VVT 4x4	07/09→	82 / 112										
2.0	01/10→	112 / 152										
2.0 16V 4x4	01/10→	112 / 152										
		677900	Hit		**2428001**	[+] 24280 16	⊕ J-made			**91067500**	ø 220 x 35	
1.6	06/06→	74 / 101										
2.0	06/06→	107 / 146	Luc		**2439101**	[+] 24391 16	⊕ HU-made ⊕ RUS-made	Bos		**97032000**		
2.0 4x4	06/06→	107 / 146										
			Luc		**82055900**		⊕ HU-made ⊕ RUS-made					
			Luc		**82506500**		⊕ HU-made ⊕ RUS-made					
					92156600	ø 280 x 22 x 47						
		678000	Sum		**2163301**	[+] 21633 17	⊕ J-made	Ake		**2172001**	[+] 21720 14.6	
1.6 VVT	06/06→	79 / 107										
			Hit		**2428001**	[+] 24280 16	⊕ J-made			**91067500**	ø 220 x 35	⊕ HU-made
			Luc		**2439101**	[+] 24391 16	⊕ HU-made ⊕ RUS-made	Bos		**97032000**		
			Luc		**82055900**		⊕ HU-made ⊕ RUS-made	Bos		**84067500**	bore ø 19 ø 220 x 35	
			Luc		**82506500**		⊕ HU-made ⊕ RUS-made			**92222300**	ø 278 x 9 x 43.4	⊕ J-made
					92156600	ø 280 x 22 x 47						
					92222100	ø 279.8 x 22 x 47	⊕ J-made					
		678100	Sum		**2163301**	[+] 21633 17	⊕ J-made	Ake		**2172001**	[+] 21720 14.6	
1.6 VVT	07/09→	88 / 120										
1.6 VVT 4x4	07/09→	88 / 120	Hit		**2428001**	[+] 24280 16	⊕ J-made			**91067500**	ø 220 x 35	⊕ HU-made
2.0 DDiS 4x4	07/09→	99 / 135	Luc		**2439101**	[+] 24391 16	⊕ HU-made ⊕ RUS-made			**92222300**	ø 278 x 9 x 43.4	⊕ J-made
			Luc		**82506500**		⊕ HU-made ⊕ RUS-made					
					92156600	ø 280 x 22 x 47	⊕ HU-made					
					92222100	ø 279.8 x 22 x 47	⊕ J-made					
		678200	Sum		**2163301**	[+] 21633 17	⊕ J-made	Ake		**2172001**	[+] 21720 14.6	
1.6 VVT 4x4	06/06→	79 / 107										
			Hit		**2428001**	[+] 24280 16	⊕ J-made			**91067500**	ø 220 x 35	⊕ J-made ⊕ HU-made
			Luc		**2439101**	[+] 24391 16	⊕ HU-made ⊕ RUS-made	Bos		**97032000**		
			Luc		**82055900**		⊕ HU-made ⊕ RUS-made	Bos		**84067500**	bore ø 19 ø 220 x 35	⊕ HU-made ⊕ J-made
			Luc		**82506500**		⊕ HU-made ⊕ RUS-made			**92222300**	ø 278 x 9 x 43.4	⊕ J-made
					92156600	ø 280 x 22 x 47	⊕ HU-made					
					92222100	ø 279.8 x 22 x 47	⊕ J-made					
		678300	Sum		**2163301**	[+] 21633 17	⊕ J-made	Ake		**2172001**	[+] 21720 14.6	
2.0 DDiS	07/09→	99 / 135										
			Luc		**2439101**	[+] 24391 16	⊕ HU-made ⊕ RUS-made			**91067500**	ø 220 x 35	⊕ HU-made
			Luc		**82506500**		⊕ HU-made ⊕ RUS-made			**92222300**	ø 278 x 9 x 43.4	⊕ J-made
					92156600	ø 280 x 22 x 47	⊕ HU-made					
					92222100	ø 279.8 x 22 x 47	⊕ J-made					
SX4 Saloon (GY) 10/07→												
		678400	Sum		**2163301**	[+] 21633 17	⊕ J-made	Ake		**2172001**	[+] 21720 14.6	
1.6	10/07→	74 / 101										
1.6	10/07→	75 / 102	Hit		**2428001**	[+] 24280 16	⊕ J-made			**91067500**	ø 220 x 35	⊕ J-made
1.6	10/07→	88 / 120										
2.0	10/07→01/10	107 / 146										
2.0	01/10→	112 / 152	Luc		**82055900**		⊕ HU-made ⊕ RUS-made			**92222300**	ø 278 x 9 x 43.4	⊕ J-made
					92222100	ø 279.8 x 22 x 47	⊕ J-made					
		678500	Sum		**2163301**	[+] 21633 17	⊕ J-made	Ake		**2172001**	[+] 21720 14.6	
1.6	10/07→	79 / 107										
			Hit		**2428001**	[+] 24280 16	⊕ J-made			**91067500**	ø 220 x 35	⊕ J-made
			Luc		**82055900**		⊕ HU-made ⊕ RUS-made	Bos		**84067500**	bore ø 19 ø 220 x 35	

R - S

		kW / hp										
SX4 Saloon (GY) 10/07→												
		678500										
1.6	10/07→	79 / 107		92222100	ø 279.8 x 22 x 47	⊕ J-made		92222300	ø 278 x 9 x 43.4	⊕ J-made
SX4 S-Cross 08/13→												
		678600										
1.6	08/13→	88 / 120						2525801	[+] 25258 14.3	
1.6	08/13→	88 / 120								
1.6 DDiS	08/13→	88 / 120								
1.6 DDiS	08/13→	88 / 120								
SX4 Stufenheck (GY) 10/07→ → SX4 Saloon (GY), Page 1099												
VITARA Cabrio (ET, TA) 07/90→10/02												
		678700	Ake	2150001	[+] 21500 14.8			91051300	ø 254 x 47	
1.6 16V (TA03)	10/99→10/02	69 / 94	Ake	82052600						
1.6 i 16V	07/90→03/99	71 / 97	PRO	92066003	ø 289 x 10 x 45.7					
		678800	Luc	2466301	[–] 24663 14	2 VALVE -brake		91033800	ø 228.6 x 40	220x36 -brake ⊕ I
1.9 D (ET)	08/96→03/99	55 / 75	Ake	2150001	[+] 21500 14.8			84033800	bore ø 22.2 ø 228.6 x 40	220x36 -brake ⊕ II
			Ake	82052600						
			PRO	92066003	ø 289 x 10 x 45.7					
		678900	Sum	2331401	[+] 23314 14.5			91051300	ø 254 x 47	
2.0 16V	12/96→03/99	97 / 132	Sum	82062000				94025400	ø 253,5 x 54	
				92149000	ø 310 x 22 x 46					
WAGON R 07/03→08/05												
		679000	Bos	2360501	[+] 23605 15.5			91051400	ø 180 x 26	
1.0	07/03→08/05	39 / 53	PRO	92135303	ø 253 x 17 x 49.1			94032400	ø 180 x 41	
		679100	Bos	2360501	[+] 23605 15.5					
1.0	06/04→08/05	44 / 60								
1.2	06/04→08/05	59 / 80	PRO	92135303	ø 253 x 17 x 49.1					
WAGON R+ (EM) 02/98→05/00												
		679200		2366201	[+] 23662 15			91051400	ø 180 x 26	
1.0 (MA61)	02/98→05/00	48 / 65								
1.2	02/98→05/00	51 / 69		82509100				97037100		
1.2 4WD	02/98→05/00	51 / 69		92113300	ø 231 x 17 x 49			94032400	ø 180 x 41	
WAGON R+ (MM) 05/00→07/05												
		679300	Bos	2360501	[+] 23605 15.5			91058000	ø 180 x 26	
0.7	08/00→07/03	40 / 54								
0.7	08/00→07/05	47 / 64	PRO	92110803	ø 246.5 x 12 x 44.2	→12/02		94023900	ø 180,0 x 34.5	→12/02
			PRO	92135303	ø 253 x 17 x 49.1	01/03→				
		679400	Bos	2360501	[+] 23605 15.5			91058000	ø 180 x 26	
0.7 FT-S	08/03→	44 / 60	PRO	92135303	ø 253 x 17 x 49.1					
		679500		2366201	[+] 23662 15			91058000	ø 180 x 26	
1.0	08/00→07/03	51 / 69								
1.0 XT Plus	08/00→07/01	74 / 101		92113300	ø 231 x 17 x 49					
		679600	Bos	2360501	[+] 23605 15.5			91058500	ø 180 x 26	→02/03
1.3	05/00→12/04	56 / 76								
1.3	08/01→	65 / 88	Bos	82063800				91065200	ø 200 x 29	03/03→
			Bos	82510100				97013400		→02/03
			PRO	92110803	ø 246.5 x 12 x 44.2			84065200	bore ø 15.9 ø 200 x 29	03/03→
			PRO	92135303	ø 253 x 17 x 49.1	⊕ ABS	Luc	84065201	bore ø 15.9 ø 200 x 29	03/03→
								94023900	ø 180,0 x 34.5	
								94024000	ø 180,0 x 34.5	⊖ ABS
								94027800	ø 200 x 38	4G000001→

WAGON R+ (MM) 05/00→07/05

		679700	Bos		2360501	[+] 23605 15.5				91065200	ø 200 x 29	
1.3	09/03→	69 / 94										
1.3 DDiS	09/03→	51 / 70	Bos		82063800					84065200	bore ø 15.9 ø 200 x 29	
			Bos		82510100					94023900	ø 180,0 x 34.5	
				PRO	92110803	ø 246.5 x 12 x 44.2				94024000	ø 180,0 x 34.5	⊖ ABS
				PRO	92135303	ø 253 x 17 x 49.1	⊕ ABS			94027800	ø 200 x 38	4G000001→
		679800	Bos		2360501	[+] 23605 15.5				91058500	ø 180 x 26	→12/02
1.3 4WD	10/01→	56 / 76	Bos		82063800					91065200	ø 200 x 29	01/03→
			Bos		82510100					97013400		→02/03
				PRO	92110803	ø 246.5 x 12 x 44.2				84065200	bore ø 15.9 ø 200 x 29	03/03→
				PRO	92135303	ø 253 x 17 x 49.1	⊕ ABS	Luc		84065201	bore ø 15.9 ø 200 x 29	03/03→
		679900	Bos		2360501	[+] 23605 15.5				91065200	ø 200 x 29	
1.3 4WD	09/03→	69 / 94	Bos		82063800					84065200	bore ø 15.9 ø 200 x 29	
			Bos		82510100							
				PRO	92110803	ø 246.5 x 12 x 44.2						
				PRO	92135303	ø 253 x 17 x 49.1	⊕ ABS					

R-S

		kW / hp											
B-LINE (40_V2) 06/98→ → INDICA (40_V2), Page 1102													
Gurkha 08/95→12/00 → SIERRA, Page 1102													
INDICA (40_V2) 06/98→													
		680000	Luc		2124502	[o] 21245 17.4							
1.4 D	10/98→	39 / 53											
1.4 D	07/03→	37 / 50	Luc		2124501	[+] 21245 17.4							
1.4 Elegance	07/03→	62 / 84											
1.4 i	10/98→	55 / 75											
1.4 L	06/98→09/02	44 / 60	Luc		82061100								
1.4 TD	07/03→	52 / 71											
1.4 TD LS	06/98→06/03	46 / 63											
INDIGO (4_V2) 01/03→													
		680100	Sum		2133301	[+] 21333 15					91042700	ø 180 x 31	
1.4	01/03→	62 / 85											
1.4 D	01/03→	46 / 62			82044500								
					92158900	ø 231 x 20 x 40.5	⊕ ABS						
		680200	Sum		2133301	[+] 21333 15					91042700	ø 180 x 31	
1.4 TD	07/03→	52 / 71			82044500								
INDIGO MARINA (4_V2) 01/03→12/10													
		680300	Sum		2133301	[+] 21333 15					91042700	ø 180 x 31	
1.4	01/03→12/10	62 / 85											
1.4 D	01/03→12/10	46 / 62			82044500								
1.4 TD	07/03→12/10	52 / 71											
LOADBETA 08/94→12/06													
		680400	Luc		2124502	[o] 21245 17.4							
1.9 D	08/94→12/06	50 / 68											
1.9 D	11/95→12/06	66 / 90											
1.9 D All-wheel Drive	11/95→12/06	66 / 90											
SAFARI (42_FD) 04/98→													
		680500	Luc		2124502	[o] 21245 17.4							
1.9 D	04/98→	66 / 90											
1.9 D 4x4	04/98→	66 / 90											
1.9 TDi 4x4	07/03→	64 / 87											
2.0 16V	06/99→	101 / 137											
2.0 TDi	11/03→	64 / 87											
2.1	05/07→	94 / 128											
2.1 4x4	05/07→	94 / 128											
2.1 EXi	08/03→	99 / 135											
2.1 EXi 4x4	08/03→	99 / 135											
2.2 TDiC	07/06→	103 / 140											
2.2 TDiC 4x4	07/06→	103 / 140											
3.0 D	07/03→	85 / 116											
3.0 D 4x4	07/03→	85 / 116											
3.0 D 4x4	07/03→08/05	48 / 65											
SIERRA 08/95→12/00													
		680600	Luc		2124502	[o] 21245 17.4							
1.9 D	08/95→02/00	50 / 68											
1.9 D	06/97→10/99	46 / 63											
1.9 TD	06/97→02/00	66 / 90											
1.9 TD	06/97→12/00	68 / 92											
1.9 TD 4x4	06/97→02/00	66 / 90											
TELCOLINE (40_FD) 02/99→12/07													
		680700	Luc		2124502	[o] 21245 17.4							
1.9 D	02/00→06/03	46 / 63											
1.9 TDiC	02/00→06/03	64 / 87		PRO	92264103	ø 261.7 x 21 x 70							
		680800	Luc		2124502	[o] 21245 17.4							
2.0 TDiC 4x4	02/99→12/05	64 / 87											
3.0 207 DI	06/99→12/07	48 / 65											
XENON Pickup 01/09→													
		680900	Luc		2124502	[o] 21245 17.4							
2.2 DiCOR	01/09→	103 / 140											
2.2 DiCOR 4x4	01/09→	103 / 140											
XENON Pick-up 01/09→ → XENON Pickup, Page 1102													

		kW / hp											
4 RUNNER (KZN18_, VZN18_, RZN18_) 11/95→11/02													
		681000	Sum		2167901	[+] 21679 15					91041500	ø 295 x 50	
1.8 2WD	08/00→11/02	83 / 113			92093300	ø 319 x 22 x 70.2					94021000	ø 295,0 x 67	
		681100	Sum		2167901	[+] 21679 15					91041500	ø 295 x 50	
2.7	11/95→07/02	112 / 152											
3.4	11/95→07/02	136 / 185	Sum		82516500						94021000	ø 295,0 x 67	

		kW / hp										
4 RUNNER (KZN18_, VZN18_, RZN18_) 11/95→11/02												
		681100			**92235100**	ø 297 x 22 x 70				**91053500**	ø 200 x 32	
2.7	11/95→07/02	112 / 152										
3.4	11/95→07/02	136 / 185										
		681200	Sum		**2167901**	[+] 21679 15				**91041500**	ø 295 x 50	
3.0 TDi	09/00→07/02	103 / 140			**92093300**	ø 319 x 22 x 70.2	⊕ rim size 16"			**94021000**	ø 295,0 x 67	
		681300	Sum		**2167901**	[+] 21679 15	⊖ D Germany			**91041500**	ø 295 x 50	
3.0 Turbo-D	11/95→11/02	92 / 125	Sum		**2167904**	[+] 21679 15	⊕ D Germany			**94021000**	ø 295,0 x 67	
					92093300	ø 319 x 22 x 70.2						
		681400	Sum		**2402401**	[+] 24024 17.8		Sum		**2194701**	[–] 21947 15	
4.0 VVTi	08/02→11/02	183 / 249										
4.7	08/02→11/02	179 / 243	Sum		**82050000**				PRO	**92170103**	ø 312 x 18 x 68	
4.7 4WD	08/02→11/02	179 / 243		PRO	**92230403**	ø 319 x 28 x 67.2				**91066100**	ø 215 x 45	
86 Coupe (ZN6_) 03/12→ → GT 86 Coupe (ZN6_), Page 1126												
ALLION I (ZZT24_, NZT24_, AZT24_) 06/01→06/07												
		681500	Ake		**2390401**	[+] 23904 16.6				**91053500**	ø 200 x 32	
1.5	06/01→04/05	80 / 109										
1.8	06/01→04/05	97 / 132										
1.8	06/01→06/07	100 / 136	Bre		**82501400**							
1.8 4WD	06/01→06/07	97 / 132										
1.8 4WD	06/01→06/07	100 / 136										
		681600	Ake		**2386401**	[–] 23864 17						
2.0	06/01→04/05	114 / 155										
2.0 4WD	06/01→06/07	114 / 155	Ake		**82515000**							
				PRO	**92173103**	ø 275 x 25 x 49						
ALLION II (NZT26_, ZRT26_) 07/07→												
		681700	Ake		**2433601**	[–] 24336 17.5						
1.5	07/07→	81 / 110										
1.8	07/07→	106 / 144	Ake		**82074400**							
1.8 4WD	07/07→	98 / 133										
2.0	07/07→	116 / 158			**92199300**	ø 275 x 22 x 46.5						
ALPHARD I (ATH1_, MNH1_, ANH1_) 04/03→04/08												
		681800	Ake		**2385501**	[–] 23855 16		Sum		**2364601**	[+] 23646 16	
2.4	09/03→04/08	96 / 131										
2.4	09/03→04/08	117 / 159							PRO	**92144203**	ø 291 x 12 x 68.7	
2.4 4WD	09/03→04/08	117 / 159										
2.4 Hybrid	09/03→04/08	117 / 159										
2.4 Hybrid 4WD	09/03→04/08	96 / 131										
2.4 Hybrid 4WD	09/03→04/08	117 / 159										
3.0	04/03→04/08	162 / 220										
3.0 4WD	04/03→04/08	162 / 220										
ALPHARD II (GGH2_, ANH2_, ATH2_) 04/08→												
		681900	Ake		**2460101**	[o] 24601 18		Bos		**2362002**	[+] 23620 16.6	
2.4	04/08→	125 / 170										
2.4 4WD	04/08→	125 / 170										
3.5	04/08→	206 / 280										
3.5 4WD	04/08→	206 / 280										
ALTEZZA (SXE1_, JCE1_, GXE1_) 01/99→07/05												
		682000	Sum		**2179101**	[+] 21791 17		Sum		**2342901**	[+] 23429 15	
2.0	01/99→06/01	114 / 155										
2.0 VVTi	02/99→07/05	147 / 200										
2.0 VVTi	07/01→07/05	118 / 160	Sum		**82509600**				PRO	**92170803**	ø 307 x 12 x 63.5	
3.0	07/01→07/05	157 / 214										
					92109100	ø 296 x 32 x 50.8				**97034700**		
ALTEZZA GITA (SXE1_, GXE1_) 01/99→06/05												
		682100	Sum		**2149001**	[+] 21490 17.1		Sum		**2342901**	[+] 23429 15	
2.0	01/99→06/01	114 / 155										
3.0	07/01→06/05	157 / 214	Sum		**82509600**				PRO	**92170803**	ø 307 x 12 x 63.5	
					92109100	ø 296 x 32 x 50.8				**97034700**		
ALTIS Sedán (_E12J_, _E12T_) 11/01→07/07 → COROLLA Saloon (_E12J_, _E12T_), Page 1121												
ALTIS Stufenheck (_E12J_, _E12T_) 11/01→07/07 → COROLLA Saloon (_E12J_, _E12T_), Page 1121												
ALTIS Stufenheck (E15_) 01/07→ → COROLLA Saloon (E15_), Page 1121												
AQUA (NHP10_) 02/12→ → PRIUS C (NHP10_), Page 1137												
ARISTO (JZS16_) 08/97→09/04												
		682200	Sum		**2149001**	[+] 21490 17.1		Sum		**2342901**	[+] 23429 15	
3.0	08/97→09/04	170 / 231										
3.0	08/97→09/04	206 / 280	Sum		**82509600**				PRO	**92170803**	ø 307 x 12 x 63.5	
4.3	04/99→09/04	224 / 305										

		kW / hp											
ARISTO (JZS16_) 08/97→09/04													
		682200		PRO	92237503	ø 296 x 32 x 51			V	91060500	ø 190 x 45	
3.0	08/97→09/04	170 / 231											
3.0	08/97→09/04	206 / 280							V	97034700		
4.3	04/99→09/04	224 / 305											
AURION (ACV5_, GSV5_) 09/11→													
		682300	Ake		2435001	[–] 24350 17.6		Ake		2433801	[–] 24338 15.4	⊕ J-made ⊕ US-made
3.5	09/11→	200 / 268		PRO	92257803	ø 281 x 10 x 66.8	⊕ J-made					
AURION (GSV4_, ACV4_) 03/06→09/11													
		682400	Ake		2435001	[–] 24350 17.6		Luc		2559901	[+] 25599 16	
2.4	03/06→07/09	116 / 158			92235000	ø 296 x 28 x 49			PRO	92257803	ø 281 x 10 x 66.8	
		682500	Ake		2435001	[–] 24350 17.6		Luc		2559901	[+] 25599 16	
3.5	03/06→09/11	200 / 268			2561001	[+] 25610 18.7	PBR					
3.5	03/06→09/11	235 / 320			92235000	ø 296 x 28 x 49						
AURION Saloon (GSV4_, ACV4_) 03/06→09/11 → AURION (GSV4_, ACV4_), Page 1104													
AURION Stufenheck (GSV4_, ACV4_) 03/06→09/11 → AURION (GSV4_, ACV4_), Page 1104													
AURIS (NRE15_, ZZE15_, ADE15_, ZRE15_, NDE15_) 10/06→													
		682600	Ake		2433601	[–] 24336 17.5	⊕ J-made	Ake		2461001	[+] 24610 14.3	⊕ J-made
1.33 Dual-VVTi	05/09→	74 / 101											
1.33 Dual-VVTi	01/10→	73 / 99	Bos		2412201	[+] 24122 19.2	⊕ GB-made	Bos		2466401	[+] 24664 16	⊕ GB-made
1.4 D-4D	03/07→	66 / 90										
1.4 VVTi	03/07→	71 / 97										
1.6	05/09→	97 / 132	Bos		82054200		⊕ GB-made	Bos		82054300		⊕ GB-made
1.6 VVTi	03/07→	91 / 124										
1.8 VVTi	10/06→	100 / 136	Ake		82074400		⊕ J-made	Ake		82509700		⊕ J-made
					92163700	ø 273 x 26 x 49.2	⊕ GB-made			92164000	ø 270 x 10 x 36.8	⊕ GB-made
					92163800	ø 275 x 22 x 46.3	⊕ J-made			92164100	ø 259 x 9 x 30.4	⊕ J-made
				PRO	92163703	ø 273 x 26 x 49.2	⊕ GB-made		PRO	92164003	ø 270 x 10 x 36.8	⊕ GB-made
				PRO	92163803	ø 275 x 22 x 46.3	⊕ J-made		PRO	92164103	ø 259 x 9 x 30.4	⊕ J-made
		682700	Ake		2433601	[–] 24336 17.5		Ake		2461001	[+] 24610 14.3	
1.5	09/09→	81 / 110										
1.5 4WD	09/09→	77 / 105	Ake		82074400			Ake		82509700		
1.8	02/09→	106 / 144										
1.8 4WD	02/09→	100 / 136			92163800	ø 275 x 22 x 46.3				92164100	ø 259 x 9 x 30.4	
				PRO	92163803	ø 275 x 22 x 46.3			PRO	92164103	ø 259 x 9 x 30.4	
		682800	Bos		2412201	[+] 24122 19.2		Bos		2466401	[+] 24664 16	
1.8	02/09→	108 / 147	Bos		82054200			Bos		82054300		
					92163700	ø 273 x 26 x 49.2				92164000	ø 270 x 10 x 36.8	
				PRO	92163703	ø 273 x 26 x 49.2			PRO	92164003	ø 270 x 10 x 36.8	
		682900	Adv		2433701	[–] 24337 17.6	Advics	Ake		2461001	[+] 24610 14.3	
1.8 Hybrid	09/10→	73 / 99	Bos		2412201	[+] 24122 19.2	Bosch	Ake		82509700		
			Ake		82074400							
				PRO	92168803	ø 296 x 28 x 49.3						
		683000	Bos		2420401	[+] 24204 19.2		Bos		2466401	[+] 24664 16	
2.0 D-4D	03/07→	93 / 126										
2.2 D	03/07→	130 / 177	Bos		82054200			Bos		82054300		⊕ GB-made
					92163900	ø 295 x 26 x 49.2		Ake		82509700		⊕ J-made
				PRO	92163903	ø 295 x 26 x 49.2				92164000	ø 270 x 10 x 36.8	
									PRO	92164003	ø 270 x 10 x 36.8	
AURIS (NZE18_, ZRE18_) 10/12→													
		683100	Bos		2569801	[+] 25698 18.7		Bos		2466401	[+] 24664 16	
1.3	10/12→	73 / 99										
1.4 D-4D	10/12→	66 / 90										
1.5	10/12→	80 / 109		PRO	92257703	ø 277 x 26 x 49.2				92164000	ø 270 x 10 x 36.8	

T - Z

		kW / hp											
AURIS (NZE18_, ZRE18_) 10/12→													
1.5 4WD	10/12→	77 / 105							PRO	92164003	ø 270 x 10 x 36.8		
1.6	10/12→	97 / 132											
1.8	10/12→	103 / 140											
1.8	10/12→	106 / 144											
1.8 Hybrid	10/12→	73 / 99											
2.0 D-4D	10/12→	91 / 124											
AURIS TOURING SPORTS (ADE18_, ZWE18_, ZRE18_) 07/13→													
		683200	Adv		2433701	[–] 24337 17.6			Bos		2466401	[+] 24664 16	
1.3	07/13→	73 / 99											
1.4 D-4D	07/13→	66 / 90											
1.6	07/13→	97 / 132	Ake		82074400						92164000	ø 270 x 10 x 36.8	
1.8 Hybrid	07/13→	73 / 99											
2.0 D-4D	07/13→	91 / 124		PRO	92168803	ø 296 x 28 x 49.3				PRO	92164003	ø 270 x 10 x 36.8	
AURIS VAN Box (ZRE18_, NZE18_) 03/13→													
		683300	Bos		2412201	[+] 24122 19.2			Bos		2466401	[+] 24664 16	
1.4 D-4D	03/13→	66 / 90											
			Bos		82054200				Bos		82054300		
					92163700	ø 273 x 26 x 49.2					92164000	ø 270 x 10 x 36.8	
				PRO	92163703	ø 273 x 26 x 49.2				PRO	92164003	ø 270 x 10 x 36.8	
AURIS VAN Kasten (ZRE18_, NZE18_) 03/13→ → AURIS VAN Box (ZRE18_, NZE18_), Page 1105													
AVALON Saloon (GSX3_) 01/05→													
		683400	Ake		2385501	[–] 23855 16					2483501	[+] 24835 15.4	
3.5 VVTi	01/05→	206 / 280								PRO	92240203	ø 281 x 10 x 67	
AVALON Saloon (MCX1_) 03/95→05/05													
		683500			2561001	[+] 25610 18.7	09/03→				2483501	[+] 24835 15.4	
3.0	03/95→05/05	140 / 190		PRO	92077703	ø 275 x 28 x 49.2	09/03→		Sum		2484401	[+] 24844 17.9	09/03→
AVALON Saloon (MCX2_) 04/00→06/05													
		683600	Ake		2351302	[+] 23513 17					2483501	[+] 24835 15.4	
2.4	08/01→04/05	112 / 152											
3.0	08/01→04/05	137 / 186		PRO	92077703	ø 275 x 28 x 49.2							
		683700	Ake		2385501	[–] 23855 16					2483501	[+] 24835 15.4	
3.0	04/00→06/05	145 / 197								PRO	92240203	ø 281 x 10 x 67	
AVALON Stufenheck (GSX3_) 01/05→ → AVALON Saloon (GSX3_), Page 1105													
AVALON Stufenheck (MCX1_) 03/95→05/05 → AVALON Saloon (MCX1_), Page 1105													
AVALON Stufenheck (MCX2_) 04/00→06/05 → AVALON Saloon (MCX2_), Page 1105													
AVANZA (F602_, F601_) 12/03→													
		683800		PRO	92254003	ø 233 x 18 x 29.5							
1.3	12/03→	63 / 86											
1.3	12/03→	65 / 88											
1.3	08/06→	67 / 91											
1.5	08/06→	76 / 103											
AVENSIS (_T22_) 09/97→02/03													
		683900	Ake		2196102	[–] 21961 15.5	⊕ rear disc brake 01/00→		Ake		2183301	[+] 21833 15.5	⊕ rear disc brake
1.6 (AT220_)	09/97→10/00	74 / 101											
1.6 (AT220_)	09/97→10/00	81 / 110	Ate		2197502	[+] 21975 18.2	⊕ rear drum brake		Ake		82502500		⊕ rear disc brake
1.8 (AT221_)	09/97→10/00	81 / 110											
2.0 (ST220_)	09/97→10/00	94 / 128	Ake		82519300		⊕ rear disc brake 01/00→				91053400	ø 228.6 x 35	⊕ rear drum brake
			Ate		82062900						97011200		
			Ate		82503500		⊕ rear drum brake				83053400	bore ø 20.6 ø 228.6 x 35	⊕ rear drum brake
				PRO	92096903	ø 260 x 25 x 49.2	⊕ rear drum brake			PRO	92135903	ø 288 x 10 x 64.9	⊕ rear disc brake
				PRO	92142003	ø 275 x 28 x 49.3	01/00→ ⊕ rear disc brake				94025500	ø 229,0 x 58	⊕ rear drum brake
											91059400	ø 170 x 40	⊕ rear disc brake
		684000	Ake		2196102	[–] 21961 15.5	⊕ rear disc brake →07/01		Luc		2401301	[–] 24013 15	07/01→ ⊕ rear disc brake
1.6 VVT-i	10/00→02/03	81 / 110											
2.0 VVT-i	10/00→02/03	110 / 150	Ate		2197502	[+] 21975 18.2	⊕ rear drum brake		Ake		2183301	[+] 21833 15.5	→07/01 ⊕ rear disc brake
			Ate		2399601	[+] 23996 18.3	⊕ rear disc brake 07/01→		Ake		82502500		→07/01 ⊕ rear disc brake
			Ake		82519300		⊕ rear disc brake →07/01		Luc		82519500		07/01→ ⊕ rear disc brake

		kW / hp										
AVENSIS (_T22_) 09/97→02/03												
		684000	Ate		82029300		⊕ rear disc brake 07/01→			91053400	ø 228.6 x 35	⊕ rear drum brake
1.6 VVT-i	10/00→02/03	81 / 110	Ate		82062900					97011200		
2.0 VVT-i	10/00→02/03	110 / 150	Ate		82503500		⊕ rear drum brake		PRO	92126503	ø 271 x 10 x 60.7	07/01→ ⊕ rear disc brake
				PRO	92096903	ø 260 x 25 x 49.2	⊕ rear drum brake		PRO	92135903	ø 288 x 10 x 64.9	→07/01 ⊕ rear disc brake
				PRO	92126403	ø 276 x 25 x 49.2	07/01→ ⊕ rear disc brake			94025500	ø 229,0 x 58	⊕ rear drum brake
				PRO	92142003	ø 275 x 28 x 49.3	→07/01 ⊕ rear disc brake			91059400	ø 170 x 40	⊕ rear disc brake
		684100	Ake		2196102	[–] 21961 15.5	⊕ rear disc brake →07/01	Luc		2401301	[–] 24013 15	07/01→ ⊕ rear disc brake
1.8 VVT-i	10/00→02/03	95 / 129	Ate		2197502	[+] 21975 18.2	⊕ rear drum brake	Ake		2183301	[+] 21833 15.5	→07/01 ⊕ rear disc brake
			Ate		2399601	[+] 23996 18.3	⊕ rear disc brake 07/01→	Ake		82502500		→07/01 ⊕ rear disc brake
			Ake		82519300		⊕ rear disc brake →07/01	Luc		82519500		07/01→ ⊕ rear disc brake
			Ate		82029300		⊕ rear disc brake 07/01→			91053400	ø 228.6 x 35	⊕ rear drum brake
			Ate		82062900					97011200		
			Ate		82503500		⊕ rear drum brake		PRO	92126503	ø 271 x 10 x 60.7	07/01→ ⊕ rear disc brake
				PRO	92096903	ø 260 x 25 x 49.2	⊕ rear drum brake		PRO	92135903	ø 288 x 10 x 64.9	→07/01 ⊕ rear disc brake
				PRO	92126403	ø 276 x 25 x 49.2	07/01→ ⊕ rear disc brake			94025500	ø 229,0 x 58	⊕ rear drum brake
				PRO	92142003	ø 275 x 28 x 49.3	→07/01 ⊕ rear disc brake			91059400	ø 170 x 40	
		684200	Ake		2196102	[–] 21961 15.5	⊕ rear disc brake 01/00→ →07/01	Luc		2401301	[–] 24013 15	07/01→ ⊕ rear disc brake
2.0 D-4D (CDT220_)	10/99→02/03	81 / 110	Ate		2197502	[+] 21975 18.2	⊕ rear drum brake	Ake		2183301	[+] 21833 15.5	→07/01 ⊕ rear disc brake
			Ate		2399601	[+] 23996 18.3	⊕ rear disc brake 07/01→	Ake		82502500		→07/01 ⊕ rear disc brake
			Ake		82519300		⊕ rear disc brake 01/00→ →07/01	Luc		82519500		07/01→ ⊕ rear disc brake
			Ate		82029300		⊕ rear disc brake 07/01→			91053400	ø 228.6 x 35	⊕ rear drum brake
			Ate		82062900					97011200		
			Ate		82503500		⊕ rear drum brake		PRO	92126503	ø 271 x 10 x 60.7	07/01→ ⊕ rear disc brake
				PRO	92096903	ø 260 x 25 x 49.2	⊕ rear drum brake		PRO	92135903	ø 288 x 10 x 64.9	→07/01 ⊕ rear disc brake
				PRO	92126403	ø 276 x 25 x 49.2	07/01→ ⊕ rear disc brake			94025500	ø 229,0 x 58	⊕ rear drum brake
				PRO	92142003	ø 275 x 28 x 49.3	01/00→ →07/01 ⊕ rear disc brake			91059400	ø 170 x 40	⊕ rear disc brake
		684300	Ake		2196102	[–] 21961 15.5	⊕ rear disc brake 01/00→ →07/01	Luc		2401301	[–] 24013 15	07/01→ ⊕ rear disc brake
2.0 TD (CT220_)	09/97→02/03	66 / 90	Ate		2197502	[+] 21975 18.2	⊕ rear drum brake	Ake		2183301	[+] 21833 15.5	→07/01 ⊕ rear disc brake
			Ate		2399601	[+] 23996 18.3	⊕ rear disc brake 07/01→	Ake		82502500		→07/01 ⊕ rear disc brake
			Ake		82519300		⊕ rear disc brake 01/00→ →07/01	Luc		82519500		07/01→ ⊕ rear disc brake
			Ate		82029300		⊕ rear disc brake 07/01→			91053400	ø 228.6 x 35	⊕ rear drum brake
			Ate		82062900					97011200		
			Ate		82503500		⊕ rear drum brake			83053400	bore ø 20.6 ø 228.6 x 35	⊕ rear drum brake
				PRO	92096903	ø 260 x 25 x 49.2	⊕ rear drum brake		PRO	92126503	ø 271 x 10 x 60.7	07/01→ ⊕ rear disc brake
				PRO	92126403	ø 276 x 25 x 49.2	07/01→ ⊕ rear disc brake		PRO	92135903	ø 288 x 10 x 64.9	→07/01 ⊕ rear disc brake
				PRO	92142003	ø 275 x 28 x 49.3	01/00→ →07/01 ⊕ rear disc brake			94025500	ø 229,0 x 58	⊕ rear drum brake
										91059400	ø 170 x 40	⊕ rear disc brake
AVENSIS (T25_) 04/03→11/08												
		684400	Bos		2376802	[+] 23768 19		Bos		2362002	[+] 23620 16.6	
1.6 VVT-i	04/03→11/08	81 / 110										
1.8	04/03→11/08	95 / 129	Bos		82054200			Bos		82054300		
2.0	04/03→11/08	108 / 147										
2.0 VVTi	04/03→11/08	114 / 155										
2.2 TD	04/05→11/08	74 / 101										

T - Z

		kW / hp										
AVENSIS (T25_) 04/03→11/08												
		684400	Bos		82063800				PRO	92135703	ø 280 x 10 x 55.8	
1.6 VVT-i	04/03→11/08	81 / 110										
1.8	04/03→11/08	95 / 129	Bos		82510100					91063200	ø 170 x 32	
2.0	04/03→11/08	108 / 147										
2.0 VVTi	04/03→11/08	114 / 155		PRO	92135503	ø 277 x 26 x 49.5				97031900		
2.2 TD	04/05→11/08	74 / 101										
		684500	Bos		2376802	[+] 23768 19			Bos	2362002	[+] 23620 16.6	
2.0 D-4D	04/03→11/08	85 / 116										
2.0 D-4D	03/06→11/08	93 / 126	Bos		82054200				Bos	82054300		
2.4	09/03→11/08	125 / 170										
2.4	10/03→11/08	120 / 163	Bos		82063800					PRO 92135703	ø 280 x 10 x 55.8	
			Bos		82510100					91063200	ø 170 x 32	
				PRO	92135603	ø 295 x 26 x 49.2				97031900		
		684600	Bos		2376802	[+] 23768 19			Bos	2362002	[+] 23620 16.6	
2.2 D-4D	10/05→11/08	110 / 150										
2.2 D-CAT	07/05→11/08	130 / 177	Bos		82054200				Bos	82054300		
			Bos		82063800					92168100	ø 280 x 10 x 59	
			Bos		82510100					PRO 92168103	ø 280 x 10 x 59	
				PRO	92168003	ø 295 x 26 x 49				91063200	ø 170 x 32	
										97031900		
AVENSIS Combi (T25) 04/03→11/08 → AVENSIS Estate (T25), Page 1107												
AVENSIS Estate (T25) 04/03→11/08												
		684700	Bos		2376802	[+] 23768 19			Bos	2362002	[+] 23620 16.6	
1.6 VVT-i	04/03→11/08	81 / 110										
1.8	04/03→11/08	95 / 129	Bos		82054200				Bos	82054300		
2.0	04/03→11/08	108 / 147										
2.0 VVTi	04/03→11/08	114 / 155	Bos		82063800					PRO 92135703	ø 280 x 10 x 55.8	
2.2 TD	04/05→11/08	74 / 101	Bos		82510100					91063200	ø 170 x 32	
				PRO	92135503	ø 277 x 26 x 49.5				97031900		
		684800	Bos		2376802	[+] 23768 19			Bos	2362002	[+] 23620 16.6	
2.0 D-4D	04/03→11/08	85 / 116										
2.0 D-4D	03/06→11/08	93 / 126	Bos		82054200				Bos	82054300		
2.4	09/03→11/08	125 / 170										
2.4	10/03→11/08	120 / 163	Bos		82063800					PRO 92135703	ø 280 x 10 x 55.8	
			Bos		82510100					91063200	ø 170 x 32	
				PRO	92135603	ø 295 x 26 x 49.2				97031900		
		684900	Bos		2376802	[+] 23768 19			Bos	2362002	[+] 23620 16.6	
2.2 D-4D	10/05→11/08	110 / 150										
2.2 D-CAT	07/05→11/08	130 / 177	Bos		82054200				Bos	82054300		
			Bos		82063800					92168100	ø 280 x 10 x 59	
			Bos		82510100					PRO 92168103	ø 280 x 10 x 59	
				PRO	92168003	ø 295 x 26 x 49				91063200	ø 170 x 32	
										97031900		
AVENSIS Estate (ZRT27, ADT27) 02/09→												
		685000	Bos		2420401	[+] 24204 19.2			Bos	2488501	[+] 24885 16.5	
1.6	02/09→	97 / 132										
1.8	02/09→	108 / 147	Bos		82054200				Bos	82054300		
2.0	02/09→	112 / 152										
2.0 D-4D	02/09→	93 / 126			92163900	ø 295 x 26 x 49.2				92195200	ø 290 x 11 x 33.9	
2.0 D-4D	11/11→	91 / 124		PRO	92163903	ø 295 x 26 x 49.2						
		685100	Bos		2494601	[+] 24946 19.1	→11/10		Bos	2488501	[+] 24885 16.5	
2.2 D-4D	02/09→	110 / 150										
2.2 D-4D	02/09→	130 / 177	Bos		2500601	[+] 25006 19.3	12/10→		Bos	82054300		
			Bos		82054200					92195200	ø 290 x 11 x 33.9	
					92195300	ø 320 x 26 x 49.3						

T - Z

30 kW / hp

AVENSIS Kombi (T25) 04/03→11/08 → AVENSIS Estate (T25), Page 1107

AVENSIS Kombi (ZRT27, ADT27) 02/09→ → AVENSIS Estate (ZRT27, ADT27), Page 1107

AVENSIS Liftback (_T22_) 09/97→02/03

		685200	Ake		2196102	[–] 21961 15.5	⊕ rear disc brake 01/00→	Ake		2183301	[+] 21833 15.5	⊕ rear disc brake
1.6 (AT220_)	09/97→10/00	74 / 101										
1.6 (AT220_)	09/97→10/00	81 / 110	Ate		2197502	[+] 21975 18.2	⊕ rear drum brake	Ake		82502500		⊕ rear disc brake
1.8 (AT221_)	09/97→10/00	81 / 110										
2.0 (ST220_)	09/97→10/00	94 / 128	Ake		82519300		⊕ rear disc brake 01/00→			91053400	ø 228.6 x 35	⊕ rear drum brake
			Ate		82062900					97011200		
			Ate		82503500		⊕ rear drum brake			83053400	bore ø 20.6 ø 228.6 x 35	⊕ rear drum brake
				PRO	92096903	ø 260 x 25 x 49.2	⊕ rear drum brake		PRO	92135903	ø 288 x 10 x 64.9	⊕ rear disc brake
				PRO	92142003	ø 275 x 28 x 49.3	01/00→ ⊕ rear disc brake			94025500	ø 229,0 x 58	⊕ rear drum brake
										91059400	ø 170 x 40	⊕ rear disc brake
		685300	Ake		2196102	[–] 21961 15.5	⊕ rear disc brake →07/01	Luc		2401301	[–] 24013 15	07/01→ ⊕ rear disc brake
1.6 VVT-i	10/00→02/03	81 / 110										
1.8 VVT-i	10/00→02/03	95 / 129	Ate		2197502	[+] 21975 18.2	⊕ rear drum brake	Ake		2183301	[+] 21833 15.5	→07/01 ⊕ rear disc brake
2.0 VVT-i	10/00→02/03	110 / 150										
			Ate		2399601	[+] 23996 18.3	⊕ rear disc brake 07/01→	Ake		82502500		→07/01 ⊕ rear disc brake
			Ake		82519300		⊕ rear disc brake →07/01	Luc		82519500		07/01→ ⊕ rear disc brake
			Ate		82029300		⊕ rear disc brake 07/01→			91053400	ø 228.6 x 35	⊕ rear drum brake
			Ate		82062900					97011200		
			Ate		82503500		⊕ rear drum brake		PRO	92126503	ø 271 x 10 x 60.7	07/01→ ⊕ rear disc brake
				PRO	92096903	ø 260 x 25 x 49.2	⊕ rear drum brake		PRO	92135903	ø 288 x 10 x 64.9	→07/01 ⊕ rear disc brake
				PRO	92126403	ø 276 x 25 x 49.2	07/01→ ⊕ rear disc brake			94025500	ø 229,0 x 58	⊕ rear drum brake
				PRO	92142003	ø 275 x 28 x 49.3	→07/01 ⊕ rear disc brake			91059400	ø 170 x 40	
		685400	Ate		2197502	[+] 21975 18.2	⊕ rear drum brake	Luc		2401301	[–] 24013 15	⊕ rear disc brake
2.0 D	09/02→02/03	85 / 115										
			Ate		2399601	[+] 23996 18.3	⊕ rear disc brake	Luc		82519500		⊕ rear disc brake
			Ate		82029300		⊕ rear disc brake			91053400	ø 228.6 x 35	⊕ rear drum brake
			Ate		82062900					97011200		
			Ate		82503500		⊕ rear drum brake		PRO	92126503	ø 271 x 10 x 60.7	⊕ rear disc brake
				PRO	92096903	ø 260 x 25 x 49.2	⊕ rear drum brake			94025500	ø 229,0 x 58	⊕ rear drum brake
				PRO	92126403	ø 276 x 25 x 49.2	⊕ rear disc brake			91059400	ø 170 x 40	⊕ rear disc brake
		685500	Ake		2196102	[–] 21961 15.5	⊕ rear disc brake 01/00→ →07/01	Luc		2401301	[–] 24013 15	07/01→ ⊕ rear disc brake
2.0 D-4D (CDT220_)	10/99→02/03	81 / 110										
			Ate		2197502	[+] 21975 18.2	⊕ rear drum brake	Ake		2183301	[+] 21833 15.5	→07/01 ⊕ rear disc brake
			Ate		2399601	[+] 23996 18.3	⊕ rear disc brake 07/01→	Ake		82502500		→07/01 ⊕ rear disc brake
			Ake		82519300		⊕ rear disc brake 01/00→ →07/01	Luc		82519500		07/01→ ⊕ rear disc brake
			Ate		82029300		⊕ rear disc brake 07/01→			91053400	ø 228.6 x 35	⊕ rear drum brake
			Ate		82062900					97011200		
			Ate		82503500		⊕ rear drum brake		PRO	92126503	ø 271 x 10 x 60.7	07/01→ ⊕ rear disc brake
				PRO	92096903	ø 260 x 25 x 49.2	⊕ rear drum brake		PRO	92135903	ø 288 x 10 x 64.9	→07/01 ⊕ rear disc brake
				PRO	92126403	ø 276 x 25 x 49.2	07/01→ ⊕ rear disc brake			94025500	ø 229,0 x 58	⊕ rear drum brake
				PRO	92142003	ø 275 x 28 x 49.3	01/00→ →07/01 ⊕ rear disc brake			91059400	ø 170 x 40	⊕ rear disc brake
		685600	Ake		2196102	[–] 21961 15.5	⊕ rear disc brake 01/00→ →07/01	Luc		2401301	[–] 24013 15	07/01→ ⊕ rear disc brake
2.0 TD (CT220_)	09/97→02/03	66 / 90										
			Ate		2197502	[+] 21975 18.2	⊕ rear drum brake	Ake		2183301	[+] 21833 15.5	→07/01 ⊕ rear disc brake
			Ate		2399601	[+] 23996 18.3	⊕ rear disc brake 07/01→	Ake		82502500		→07/01 ⊕ rear disc brake

T - Z

		kW / hp											
AVENSIS Liftback (_T22_) 09/97→02/03													
		685600	Ake		82519300		⊕ rear disc brake 01/00→ →07/01	Luc		82519500		07/01→ ⊕ rear disc brake
2.0 TD (CT220_)	09/97→02/03	66 / 90	Ate		82029300		⊕ rear disc brake 07/01→			91053400	ø 228.6 x 35	⊕ rear drum brake
			Ate		82062900					97011200		
			Ate		82503500		⊕ rear drum brake			83053400	bore ø 20.6 ø 228.6 x 35	⊕ rear drum brake
				PRO	92096903	ø 260 x 25 x 49.2	⊕ rear drum brake		PRO	92126503	ø 271 x 10 x 60.7	07/01→ ⊕ rear disc brake
				PRO	92126403	ø 276 x 25 x 49.2	07/01→ ⊕ rear disc brake		PRO	92135903	ø 288 x 10 x 64.9	→07/01 ⊕ rear disc brake
				PRO	92142003	ø 275 x 28 x 49.3	01/00→ →07/01 ⊕ rear disc brake			94025500	ø 229,0 x 58	⊕ rear drum brake
										91059400	ø 170 x 40	⊕ rear disc brake
AVENSIS Saloon (T25) 04/03→11/08													
		685700	Bos		2376802	[+] 23768 19		Bos		2362002	[+] 23620 16.6	
1.6 VVT-i	04/03→11/08	81 / 110	Bos		82054200			Bos		82054300		
1.8	04/03→11/08	95 / 129	Bos		82063800				PRO	92135703	ø 280 x 10 x 55.8	
2.0	04/03→11/08	108 / 147	Bos		82510100					91063200	ø 170 x 32	
2.0 VVTi	04/03→11/08	114 / 155		PRO	92135503	ø 277 x 26 x 49.5				97031900		
2.2 TD	04/05→11/08	74 / 101										
		685800	Bos		2376802	[+] 23768 19		Bos		2362002	[+] 23620 16.6	
2.0 D-4D	04/03→11/08	85 / 116	Bos		82054200			Bos		82054300		
2.0 D-4D	03/06→11/08	93 / 126	Bos		82063800				PRO	92135703	ø 280 x 10 x 55.8	
2.4	09/03→11/08	125 / 170	Bos		82510100					91063200	ø 170 x 32	
2.4	10/03→11/08	120 / 163		PRO	92135603	ø 295 x 26 x 49.2				97031900		
		685900	Bos		2376802	[+] 23768 19		Bos		2362002	[+] 23620 16.6	
2.2 D-4D	10/05→11/08	110 / 150	Bos		82054200			Bos		82054300		
2.2 D-CAT	07/05→11/08	130 / 177	Bos		82063800					92168100	ø 280 x 10 x 59	
			Bos		82510100				PRO	92168103	ø 280 x 10 x 59	
				PRO	92168003	ø 295 x 26 x 49				91063200	ø 170 x 32	
										97031900		
AVENSIS Saloon (ZRT27, ADT27) 02/09→													
		686000	Bos		2420401	[+] 24204 19.2		Bos		2488501	[+] 24885 16.5	
1.6	02/09→	97 / 132	Bos		82054200			Bos		82054300		
1.8	02/09→	108 / 147			92163900	ø 295 x 26 x 49.2				92195200	ø 290 x 11 x 33.9	
2.0	02/09→	112 / 152		PRO	92163903	ø 295 x 26 x 49.2						
2.0 D-4D	02/09→	93 / 126										
2.0 D-4D	11/11→	91 / 124										
		686100	Bos		2494601	[+] 24946 19.1	→11/10	Bos		2488501	[+] 24885 16.5	
2.2 D-4D	02/09→	110 / 150	Bos		2500601	[+] 25006 19.3	12/10→	Bos		82054300		
2.2 D-4D	02/09→	130 / 177	Bos		82054200					92195200	ø 290 x 11 x 33.9	
					92195300	ø 320 x 26 x 49.3						
AVENSIS Station Wagon (_T22_) 09/97→02/03													
		686200	Ake		2196102	[–] 21961 15.5	⊕ rear disc brake 01/00→	Ake		2183301	[+] 21833 15.5	⊕ rear disc brake
1.6 (AT220_)	09/97→10/00	74 / 101	Ate		2197502	[+] 21975 18.2	⊕ rear drum brake	Ake		82502500		⊕ rear disc brake
1.6 (AT220_)	09/97→10/00	81 / 110	Ake		82519300		⊕ rear disc brake 01/00→			91053400	ø 228.6 x 35	⊕ rear drum brake
1.8 (AT221_)	09/97→10/00	81 / 110	Ate		82062900					97011200		
2.0 (ST220_)	09/97→10/00	94 / 128	Ate		82503500		⊕ rear drum brake			83053400	bore ø 20.6 ø 228.6 x 35	⊕ rear drum brake
				PRO	92096903	ø 260 x 25 x 49.2	⊕ rear drum brake		PRO	92135903	ø 288 x 10 x 64.9	⊕ rear disc brake

AVENSIS Station Wagon (_T22_) 09/97→02/03

		686200												
1.6 (AT220_)	09/97→10/00	74 / 101		PRO	92142003	ø 275 x 28 x 49.3	01/00→ ⊕ rear disc brake			94025500	ø 229,0 x 58	⊕ rear drum brake
1.6 (AT220_)	09/97→10/00	81 / 110										
1.8 (AT221_)	09/97→10/00	81 / 110								91059400	ø 170 x 40	⊕ rear disc brake
2.0 (ST220_)	09/97→10/00	94 / 128										
		686300	Ake		2196102	[–] 21961 15.5	⊕ rear disc brake →07/01	Luc		2401301	[–] 24013 15	07/01→ ⊕ rear disc brake
1.6 VVT-i	10/00→02/03	81 / 110										
1.8 VVT-i	10/00→02/03	95 / 129	Ate		2197502	[+] 21975 18.2	⊕ rear drum brake	Ake		2183301	[+] 21833 15.5	→07/01 ⊕ rear disc brake
2.0 VVT-i	10/00→02/03	110 / 150										
			Ate		2399601	[+] 23996 18.3	⊕ rear disc brake 07/01→	Ake		82502500		→07/01 ⊕ rear disc brake
			Ake		82519300		⊕ rear disc brake →07/01	Luc		82519500		07/01→ ⊕ rear disc brake
			Ate		82029300		⊕ rear disc brake 07/01→			91053400	ø 228.6 x 35	⊕ rear drum brake
			Ate		82062900					97011200		
			Ate		82503500		⊕ rear drum brake		PRO	92126503	ø 271 x 10 x 60.7	07/01→ ⊕ rear disc brake
				PRO	92096903	ø 260 x 25 x 49.2	⊕ rear drum brake		PRO	92135903	ø 288 x 10 x 64.9	→07/01 ⊕ rear disc brake
				PRO	92126403	ø 276 x 25 x 49.2	07/01→ ⊕ rear disc brake			94025500	ø 229,0 x 58	⊕ rear drum brake
				PRO	92142003	ø 275 x 28 x 49.3	→07/01 ⊕ rear disc brake			91059400	ø 170 x 40	
		686400	Ate		2197502	[+] 21975 18.2	⊕ rear drum brake	Luc		2401301	[–] 24013 15	⊕ rear disc brake
1.9 D	09/02→02/03	85 / 115	Ate		2399601	[+] 23996 18.3	⊕ rear disc brake	Luc		82519500		⊕ rear disc brake
			Ate		82029300		⊕ rear disc brake			91053400	ø 228.6 x 35	⊕ rear drum brake
			Ate		82062900					97011200		
			Ate		82503500		⊕ rear drum brake		PRO	92126503	ø 271 x 10 x 60.7	⊕ rear disc brake
				PRO	92096903	ø 260 x 25 x 49.2	⊕ rear drum brake			94025500	ø 229,0 x 58	⊕ rear drum brake
				PRO	92126403	ø 276 x 25 x 49.2	⊕ rear disc brake			91059400	ø 170 x 40	⊕ rear disc brake
		686500	Ake		2196102	[–] 21961 15.5	⊕ rear disc brake 01/00→ →07/01	Luc		2401301	[–] 24013 15	07/01→ ⊕ rear disc brake
2.0 D-4D (CDT220_)	10/99→02/03	81 / 110	Ate		2197502	[+] 21975 18.2	⊕ rear drum brake	Ake		2183301	[+] 21833 15.5	→07/01 ⊕ rear disc brake
			Ate		2399601	[+] 23996 18.3	⊕ rear disc brake 07/01→	Ake		82502500		→07/01 ⊕ rear disc brake
			Ake		82519300		⊕ rear disc brake 01/00→ →07/01	Luc		82519500		07/01→ ⊕ rear disc brake
			Ate		82029300		⊕ rear disc brake 07/01→			91053400	ø 228.6 x 35	⊕ rear drum brake
			Ate		82062900					97011200		
			Ate		82503500		⊕ rear drum brake		PRO	92126503	ø 271 x 10 x 60.7	07/01→ ⊕ rear disc brake
				PRO	92096903	ø 260 x 25 x 49.2	⊕ rear drum brake		PRO	92135903	ø 288 x 10 x 64.9	→07/01 ⊕ rear disc brake
				PRO	92126403	ø 276 x 25 x 49.2	07/01→ ⊕ rear disc brake			94025500	ø 229,0 x 58	⊕ rear drum brake
				PRO	92142003	ø 275 x 28 x 49.3	01/00→ →07/01 ⊕ rear disc brake			91059400	ø 170 x 40	⊕ rear disc brake
		686600	Ake		2196102	[–] 21961 15.5	⊕ rear disc brake 01/00→ →07/01	Luc		2401301	[–] 24013 15	07/01→ ⊕ rear disc brake
2.0 TD (CT220_)	09/97→02/03	66 / 90	Ate		2197502	[+] 21975 18.2	⊕ rear drum brake	Ake		2183301	[+] 21833 15.5	→07/01 ⊕ rear disc brake
			Ate		2399601	[+] 23996 18.3	⊕ rear disc brake 07/01→	Ake		82502500		→07/01 ⊕ rear disc brake
			Ake		82519300		⊕ rear disc brake 01/00→ →07/01	Luc		82519500		07/01→ ⊕ rear disc brake
			Ate		82029300		⊕ rear disc brake 07/01→			91053400	ø 228.6 x 35	⊕ rear drum brake
			Ate		82062900					97011200		
			Ate		82503500		⊕ rear drum brake			83053400	bore ø 20.6 ø 228.6 x 35	⊕ rear drum brake
				PRO	92096903	ø 260 x 25 x 49.2	⊕ rear drum brake		PRO	92126503	ø 271 x 10 x 60.7	07/01→ ⊕ rear disc brake
				PRO	92126403	ø 276 x 25 x 49.2	07/01→ ⊕ rear disc brake		PRO	92135903	ø 288 x 10 x 64.9	→07/01 ⊕ rear disc brake
				PRO	92142003	ø 275 x 28 x 49.3	01/00→ →07/01 ⊕ rear disc brake			94025500	ø 229,0 x 58	⊕ rear drum brake
										91059400	ø 170 x 40	⊕ rear disc brake

T - Z

		kW / hp											
AVENSIS Stufenheck (T25) 04/03→11/08 → AVENSIS Saloon (T25), Page 1109													
AVENSIS Stufenheck (ZRT27, ADT27) 02/09→ → AVENSIS Saloon (ZRT27, ADT27), Page 1109													
AVENSIS VERSO (_CLM2_, _ACM2_) 08/01→11/09													
		686700	Ake		2383601	[+] 23836 16.7		Sum		2364601	[+] 23646 16	
2.0 D-4D	08/01→08/05	85 / 116										
2.0 VVT-i	08/01→11/09	110 / 150	Ate		2399601	[+] 23996 18.3	Teves	Sum		82508300		
			Ake		82509800				PRO	92144203	ø 291 x 12 x 68.7	
			Ate		82029300		Teves			91060500	ø 190 x 45	
			Ate		82062900					97034700		
				PRO	92077703	ø 275 x 28 x 49.2	→12/02					
				PRO	92135403	ø 275 x 28 x 49.4	12/02→					
		686800	Ake		2383601	[+] 23836 16.7		Sum		2364601	[+] 23646 16	
2.4 VVTi 4WD	11/03→08/06	115 / 156										
			Ake		82509800			Sum		82508300		
				PRO	92135403	ø 275 x 28 x 49.4			PRO	92144203	ø 291 x 12 x 68.7	
										91060500	ø 190 x 45	
										97034700		
		686900	Ake		2383601	[+] 23836 16.7		Sum		2364601	[+] 23646 16	
2.4 VVTi GLS	10/03→11/09	115 / 156										
			Ate		2399601	[+] 23996 18.3	Teves	Sum		82508300		
			Ake		82509800				PRO	92144203	ø 291 x 12 x 68.7	
			Ate		82029300		Teves			91060500	ø 190 x 45	
			Ate		82062900					97034700		
				PRO	92135403	ø 275 x 28 x 49.4						
AXIO/ALTIS Stufenheck (_E12J_, _E12T_) 11/01→07/07 → COROLLA Saloon (_E12J_, _E12T_), Page 1121													
AYGO (WNB1_, KGB1_) 07/05→													
		687000	Bos		2395901	[–] 23959 17.5		Bos		91064500	ø 200 x 32	
1.0 (KGB10)	07/05→	50 / 68										
1.4 HDi (WNB10)	07/05→08/10	40 / 54	Bos		82054300			Bos		97032000		
			Bos		82063800			Bos		84064501	bore ø 17.5 ø 200 x 32	
			Bos		82510100					94026500	ø 200,0 x 44	
				PRO	92141903	ø 247 x 20 x 35.3						
		687100	Bos		2395901	[–] 23959 17.5		Bos		91064500	ø 200 x 32	
1.0 GPL	07/05→	50 / 68										
			Bos		82054300		2x	Bos		97032000		
			Bos		82063800			Bos		84064501	bore ø 17.5 ø 200 x 32	
			Bos		82510100					94026500	ø 200,0 x 44	
				PRO	92141903	ø 247 x 20 x 35.3						
bB I (NCP3_) 03/00→12/05													
		687200	Ake		2531601	[+] 25316 16.5				91053500	ø 200 x 32	
1.5	03/00→12/05	80 / 109										
			Adv		82075300		→11/03			94029300	ø 200 x 43	
bB II (QNC2_) 12/05→													
		687300	Sum		2350701	[+] 23507 15				91067900	ø 180 x 28	
1.3	12/05→	68 / 92										
1.3 4WD	12/05→	68 / 92								94036400	ø 180,0 x 33.5	
1.5	12/05→	80 / 109										
BELTA Saloon (ZSP9_, NCP9_) 08/07→ → VIOS/YARIS Saloon (ZSP9_, NCP9_), Page 1142													
BELTA Stufenheck (ZSP9_, NCP9_) 08/07→ → VIOS/YARIS Saloon (ZSP9_, NCP9_), Page 1142													
BLADE (NRE15_, ZZE15_, ADE15_, ZRE15_, NDE15_) 10/06→ → AURIS (NRE15_, ZZE15_, ADE15_, ZRE15_, NDE15_), Page 1104													

T - Z

		kW / hp											
BREVIS (JCG1_) 10/99→06/07													
		687400	Ake		2386401	[–] 23864 17		Sum		2342901	[+] 23429 15	
2.5 4WD	10/99→09/02	147 / 200										
3.0	10/99→06/07	162 / 220										
CAMRY (_CV2_, _XV2_) 08/96→11/01													
		687500	Sum		2179101	[+] 21791 17	Sumitomo	Ake		2359201	[–] 23592 15	Akebono
2.2	11/00→11/01	93 / 126										
3.0 V6	08/96→11/01	135 / 184	Ake		2351302	[+] 23513 17	Akebono	Ake		2183301	[+] 21833 15.5	Sumitomo
			Ake		82033400		Akebono			92079300	ø 269 x 10 x 64.7	
				PRO	92077703	ø 275 x 28 x 49.2	⊕ rim size 15"			91074600	ø 170 x 40	
		687600	Sum		2179101	[+] 21791 17	Sumitomo	Ake		2359201	[–] 23592 15	Akebono
2.2 (SXV20_)	08/96→11/01	96 / 131										
3.0 24V (MCV20_)	08/96→11/01	140 / 190	Ake		2351302	[+] 23513 17	Akebono	Ake		2183301	[+] 21833 15.5	Sumitomo
			Ake		82033400		Akebono			92079300	ø 269 x 10 x 64.7	
				PRO	92077703	ø 275 x 28 x 49.2	⊕ rim size 15"			91059400	ø 170 x 40	
		687700	Sum		2179101	[+] 21791 17	Sumitomo	Ake		2359201	[–] 23592 15	Akebono
3.0 (VDV10)	08/96→07/01	140 / 190										
			Ake		2351302	[+] 23513 17	Akebono	Ake		2183301	[+] 21833 15.5	Sumitomo
			Ake		82033400		Akebono			92079300	ø 269 x 10 x 64.7	
				PRO	92077703	ø 275 x 28 x 49.2	⊕ rim size 15"					
CAMRY (MCV3_, ACV3_, _XV3_) 08/01→11/06													
		687800	Ake		2385501	[–] 23855 16	→12/05	Ake		2370201	[–] 23702 15.8	
2.0 VVTI	08/01→11/06	110 / 150										
			Ake		2392801	[–] 23928 17	→12/05	Ake		82515200		
			Ake		2435001	[–] 24350 17.6	01/06→			91059400	ø 170 x 40	
			Ake		82515100							
		687900	Ake		2385501	[–] 23855 16	→12/05	Ake		2370201	[–] 23702 15.8	
2.4 VVT-i	11/01→11/06	112 / 152										
			Ake		2392801	[–] 23928 17	→12/05	Ake		2183301	[+] 21833 15.5	
			Ake		2435001	[–] 24350 17.6	01/06→	Luc		2559901	[+] 25599 16	⊕ AUS
					2561001	[+] 25610 18.7	⊕ AUS			92117000	ø 288 x 10 x 64.7	
					92135800	ø 296 x 28 x 49.2				91059400	ø 170 x 40	
		688000	Ake		2435001	[–] 24350 17.6		Ake		2433801	[–] 24338 15.4	
2.4 VVTi Hybrid	01/06→11/06	105 / 143							PRO	92257803	ø 281 x 10 x 66.8	
										91059400	ø 170 x 40	
		688100	Ake		2385501	[–] 23855 16	→12/05	Ake		2370201	[–] 23702 15.8	
3.0	09/02→06/06	141 / 192										
			Ake		2392801	[–] 23928 17	→12/05	Luc		2559901	[+] 25599 16	⊕ AUS
			Ake		2435001	[–] 24350 17.6	01/06→	Ake		82515200		
					2561001	[+] 25610 18.7	⊕ AUS			91059400	ø 170 x 40	
			Ake		82515100							
				PRO	92077703	ø 275 x 28 x 49.2	⊕ AUS					
		688200	Ake		2385501	[–] 23855 16	→12/05	Ake		2370201	[–] 23702 15.8	
3.0 V6	11/01→11/06	137 / 186										
			Ake		2392801	[–] 23928 17	→12/05	Ake		2183301	[+] 21833 15.5	
			Ake		2435001	[–] 24350 17.6	01/06→			92117000	ø 288 x 10 x 64.7	
					92135800	ø 296 x 28 x 49.2				91059400	ø 170 x 40	
		688300	Ake		2385501	[–] 23855 16		Ake		2370201	[–] 23702 15.8	
3.3 VVTi	08/02→12/05	165 / 224										
			Ake		2392801	[–] 23928 17		Ake		82515200		
			Ake		82515100					92139800	ø 269 x 12 x 64.8	

T - Z

		kW / hp										
CAMRY (MCV3_, ACV3_, _XV3_) 08/01→11/06												
		688300			92235200	ø 296 x 28 x 49.5				91059400	ø 170 x 40	
3.3 VVTi	08/02→12/05	165 / 224										
		688400	Ake		2435001	[–] 24350 17.6		Ake		2433801	[–] 24338 15.4	
3.5 VVTi XLE	01/06→11/06	197 / 268			92235000	ø 296 x 28 x 49			PRO	92257803	ø 281 x 10 x 66.8	
										91059400	ø 170 x 40	
CAMRY Saloon (_CV2_, _XV2_) 08/96→11/01 → CAMRY (_CV2_, _XV2_), Page 1112												
CAMRY Saloon (_XV4_) 01/06→09/11												
		688500	Ake		2435001	[–] 24350 17.6		Ake		2433801	[–] 24338 15.4	
2.0 VVT-i	01/06→09/11	108 / 147										
2.4 VVTi	01/06→09/11	123 / 167			92235000	ø 296 x 28 x 49	→07/11			82074700		
2.4 VVTi	10/06→09/11	127 / 173										
2.4 VVTi Hybrid	01/06→09/11	105 / 143						Ake		82509900		
2.4 VVT-i Hybrid	01/06→09/11	110 / 150										
2.5 VVTi	01/10→09/11	124 / 169							PRO	92240203	ø 281 x 10 x 67	
2.5 VVTi	01/10→09/11	129 / 175										
3.5	01/08→09/11	204 / 277							PRO	92257803	ø 281 x 10 x 66.8	
3.5	01/08→09/11	209 / 284										
		688600	Ake		2435001	[–] 24350 17.6		Ake		2433801	[–] 24338 15.4	
2.4 VVTi	01/06→09/11	116 / 158										
					2561001	[+] 25610 18.7	⊕ AUS	Luc		2559901	[+] 25599 16	⊕ AUS
					92235000	ø 296 x 28 x 49	→07/11			82074700		
								Ake		82509900		
									PRO	92240203	ø 281 x 10 x 67	
									PRO	92257803	ø 281 x 10 x 66.8	
CAMRY Saloon (MCV3_, ACV3_, _XV3_) 08/01→11/06 → CAMRY (MCV3_, ACV3_, _XV3_), Page 1112												
CAMRY Saloon (XV5_) 09/11→												
		688700	Ake		2435001	[–] 24350 17.6		Luc		2559901	[+] 25599 16	
2.5 (ASV50)	09/11→	133 / 181										
2.5 (ASV50)	01/12→	135 / 184							PRO	92257803	ø 281 x 10 x 66.8	
3.5	09/11→	204 / 277										
										91059400	ø 170 x 40	
		688800	Ake		2435001	[–] 24350 17.6		Luc		2559901	[+] 25599 16	
2.5 Hybrid	09/11→	118 / 160										
					2561001	[+] 25610 18.7	→03/12 ⊕ AUS		PRO	92257803	ø 281 x 10 x 66.8	
					92235000	ø 296 x 28 x 49	⊕ AUS			91059400	ø 170 x 40	
CAMRY SOLARA Cabriolet (MCV3_, ACV3_) 02/04→11/08 → CAMRY SOLARA Convertible (MCV3_, ACV3_), Page 1113												
CAMRY SOLARA Convertible (MCV3_, ACV3_) 02/04→11/08												
		688900	Ake		2351302	[+] 23513 17		Ake		2359201	[–] 23592 15	
2.4	02/04→11/08	117 / 159										
3.0	02/04→11/08	137 / 186										
3.3	02/04→11/08	165 / 224										
CAMRY SOLARA Coupe (MCV3_, ACV3_) 07/03→07/08												
		689000	Ake		2351302	[+] 23513 17		Ake		2359201	[–] 23592 15	
2.4	07/03→07/08	117 / 159										
3.0	07/03→07/08	137 / 186										
3.3	07/03→07/08	165 / 224										
CAMRY Stufenheck (_CV2_, _XV2_) 08/96→11/01 → CAMRY (_CV2_, _XV2_), Page 1112												
CAMRY Stufenheck (_XV4_) 01/06→09/11 → CAMRY Saloon (_XV4_), Page 1113												
CAMRY Stufenheck (MCV3_, ACV3_, _XV3_) 08/01→11/06 → CAMRY (MCV3_, ACV3_, _XV3_), Page 1112												
CAMRY Stufenheck (XV5_) 09/11→ → CAMRY Saloon (XV5_), Page 1113												
CELICA (ST20_, AT20_) 11/93→11/99												
		689100	Sum		2160101	[+] 21601 17.6		Ake		2007601	[+] 20076 15.5	
1.8 i 16V (AT200/ST)	11/93→11/99	85 / 116										
					92077400	ø 255 x 25 x 49.2				92070800	ø 269 x 10 x 64.5	
										91059400	ø 170 x 40	
		689200	Sum		2179101	[+] 21791 17		Ake		2007601	[+] 20076 15.5	
2.0 i 16V	04/96→11/99	125 / 170										
2.0 i 16V (ST202/GT)	11/93→11/99	129 / 175			92142003	ø 275 x 28 x 49.3				92070800	ø 269 x 10 x 64.5	
										91059400	ø 170 x 40	

		kW / hp											
CELICA (ST20_, AT20_) 11/93→11/99													
2.0 i Turbo 4WD (ST205)	02/94→11/99	689300 178 / 242	Sum		2195701	[+] 21957 17		Sum		2195501	[+] 21955 16	
				PRO	92179703	ø 315 x 32 x 58.1			PRO	92169503	ø 315 x 16 x 59.6	
										91059400	ø 170 x 40	
CELICA (ZZT23_) 08/99→09/05													
1.8 16V TS (ZZT231_)	08/99→09/05	689400 141 / 192	Ake		2386401	[–] 23864 17	09/02→	Sum		2352101	[+] 23521 14	
			Ake		2351002	[+] 23510 15.5	→08/02	Sum		82072500		
				PRO	92173103	ø 275 x 25 x 49				91063200	ø 170 x 32	
										97031900		
1.8 16V VT-i (ZZT230_)	08/99→07/05	689500 105 / 143	Ake		2386401	[–] 23864 17	09/02→	Sum		2352101	[+] 23521 14	
			Ake		2351002	[+] 23510 15.5	→08/02	Sum		82072500		
					92138900	ø 255 x 25 x 49.3	→08/02			91063200	ø 170 x 32	
										97031900		
CELICA Cabriolet (AT20_, ST20_) 11/93→08/99 → CELICA Convertible (AT20_, ST20_), Page 1114													
CELICA Convertible (AT20_, ST20_) 11/93→08/99													
2.0 GTi	08/94→08/99	689600 129 / 175	Sum		2179101	[+] 21791 17		Ake		2007601	[+] 20076 15.5	
2.0 i 16V	11/93→08/99	125 / 170		PRO	92142003	ø 275 x 28 x 49.3				92070800	ø 269 x 10 x 64.5	
										91059400	ø 170 x 40	
CELSIOR (UCF1_) 10/96→08/00													
4.0	10/96→08/00	689700 206 / 280	Sum		2149001	[+] 21490 17.1		Sum		2342901	[+] 23429 15	
			Sum		82509600				PRO	92170803	ø 307 x 12 x 63.5	
				PRO	92237503	ø 296 x 32 x 51				91060500	ø 190 x 45	
										97034700		
CELSIOR (UCF2_) 10/96→08/00													
4.0	10/96→08/00	689800 206 / 280	Sum		2149001	[+] 21490 17.1		Sum		2342901	[+] 23429 15	
			Sum		82509600				PRO	92170803	ø 307 x 12 x 63.5	
				PRO	92237503	ø 296 x 32 x 51				91060500	ø 190 x 45	
										97034700		
CELSIOR (UCF3_) 09/00→08/06													
4.3 VVTi	09/00→08/06	689900 208 / 283	Sum		2149001	[+] 21490 17.1		Sum		2342901	[+] 23429 15	
			Sum		82509600				PRO	92170803	ø 307 x 12 x 63.5	
				PRO	92237503	ø 296 x 32 x 51	→11/02			91060500	ø 190 x 45	
										97034700		
CHASER (_X10_) 10/96→05/01													
2.5 VVTi	10/96→05/01	690000 147 / 200	Sum		2179101	[+] 21791 17		Sum		2149101	[+] 21491 15.5	
2.5 VVTi	10/96→05/01	690100 206 / 280	Sum		2149001	[+] 21490 17.1						
			Sum		82509600							
					92109100	ø 296 x 32 x 50.8						
COASTER Bus (TRB5_, XZB5_, RZB4_, HZB5_, BZB5_, BB4_) 02/93→													
3.7 D	02/93→08/01	690200 89 / 121			2929601	[+] 29296 20						
4.0	11/03→	132 / 180										
4.0 TD	11/03→	110 / 150										
CONDOR (_TGN4_, _KUN4_) 07/03→ → KIJANG INNOVA (_TGN4_, _KUN4_), Page 1131													
COROLLA (_E11_) 04/97→06/02													
1.4 (EE111_)	04/97→02/00	690300 63 / 86	Ake		2329402	[–] 23294 16.5	⊕ J-made	Ake		2007601	[+] 20076 15.5	⊕ rear disc brake 08/98→ →10/99

T - Z

COROLLA (_E11_) 04/97→06/02

		kW / hp											
1.4 (EE111_)	04/97→02/00	690300 63 / 86	Sum		2160101	[+] 21601 17.6	⊕ J-made	Ake		2183301	[+] 21833 15.5	11/99→
			Luc		2308801	[+] 23088 17.6	⊕ GB-made			91043200	ø 200 x 36	⊕ rear drum brake ⊕ J
			Luc		82509400		⊕ GB-made			91056700	ø 200 x 37	⊕ rear drum brake ⊕ GB
			Ake		82519300		⊕ J-made	Luc		97015800		
				PRO	92077203	ø 255 x 22 x 48.2				92136000	ø 240 x 10 x 59.7	
									PRO	92169203	ø 265.5 x 9 x 36.3	
										94021200	ø 200,0 x 55	⊕ rear drum brake ⊕ bad road pack.
										94025600	ø 200 x 49	⊕ rear drum brake ⊖ bad road pack.
1.4 16V (ZZE111_) 1.9 D (WZE110_)	02/00→11/01 02/00→11/01	690400 71 / 97 51 / 69	Ake		2329402	[–] 23294 16.5	⊕ J-made	Luc		2401301	[–] 24013 15	⊕ rear disc brake ⊕ ABS ⊕ GB-made
			Sum		2160101	[+] 21601 17.6	⊕ J-made	Ake		2183301	[+] 21833 15.5	⊕ rear disc brake ⊕ ABS ⊕ J-made
			Luc		2308801	[+] 23088 17.6	⊕ GB-made	Luc		82037300		⊕ rear disc brake ⊕ ABS ⊕ GB-made
			Luc		82509400		⊕ GB-made			91043200	ø 200 x 36	⊕ rear drum brake
			Ake		82519300		⊕ J-made			91056700	ø 200 x 37	⊕ rear drum brake ⊕ GB
				PRO	92077203	ø 255 x 22 x 48.2		Luc		97015800		
										92136000	ø 240 x 10 x 59.7	
									PRO	92169203	ø 265.5 x 9 x 36.3	
										94021200	ø 200,0 x 55	⊕ rear drum brake ⊕ bad road pack.
										94025600	ø 200 x 49	⊕ rear drum brake ⊖ bad road pack.
1.6 16V (ZZE112_)	02/00→11/01	690500 81 / 110	Ake		2329402	[–] 23294 16.5	⊕ J-made	Luc		2401301	[–] 24013 15	⊕ rear disc brake ⊕ ABS ⊕ GB-made
			Luc		2308801	[+] 23088 17.6	⊕ GB-made	Ake		2183301	[+] 21833 15.5	⊕ rear disc brake ⊕ ABS ⊕ J-made
			Luc		82509400		⊕ GB-made	Luc		82037300		⊕ rear disc brake ⊕ ABS ⊕ GB-made
			Ake		82519300		⊕ J-made		PRO	92169203	ø 265.5 x 9 x 36.3	⊕ rear disc brake
				PRO	92077203	ø 255 x 22 x 48.2				94021200	ø 200,0 x 55	⊕ rear drum brake
1.6 Aut. (AE111_)	04/97→02/00	690600 79 / 107	Ake		2329402	[–] 23294 16.5	⊕ J-made	Ake		2007601	[+] 20076 15.5	⊕ rear disc brake 08/98→ →10/99
			Sum		2160101	[+] 21601 17.6	⊕ J-made	Ake		2183301	[+] 21833 15.5	11/99→
			Luc		2308801	[+] 23088 17.6	⊕ GB-made			91043200	ø 200 x 36	⊕ rear drum brake
			Luc		82509400		⊕ GB-made			91056700	ø 200 x 37	⊕ rear drum brake ⊕ GB
			Ake		82519300		⊕ J-made	Luc		97015800		
				PRO	92077203	ø 255 x 22 x 48.2				92136000	ø 240 x 10 x 59.7	
									PRO	92169203	ø 265.5 x 9 x 36.3	
										94021200	ø 200,0 x 55	⊕ rear drum brake ⊕ bad road pack.
										94025600	ø 200 x 49	⊕ rear drum brake ⊖ bad road pack.
1.6 i 20V (AE111)	08/98→08/00	690700 121 / 165						Ake		2007601	[+] 20076 15.5	⊕ AUS-made
1.8	10/97→10/01	690800 81 / 110	Sum		2160101	[+] 21601 17.6				91043200	ø 200 x 36	
				PRO	92077203	ø 255 x 22 x 48.2				94025600	ø 200 x 49	
1.8	08/98→06/02	690900 85 / 116	Sum		2160101	[+] 21601 17.6	Sumitomo	Ake		2007601	[+] 20076 15.5	
				PRO	92077203	ø 255 x 22 x 48.2						
2.0 D (CE110_)	04/97→02/00	691000 53 / 72	Ake		2329402	[–] 23294 16.5	Akebono	Ake		2007601	[+] 20076 15.5	⊕ rear disc brake 08/98→ →10/99
			Sum		2160101	[+] 21601 17.6	Sumitomo	Ake		2183301	[+] 21833 15.5	11/99→
			Ake		82519300		Akebono			91043200	ø 200 x 36	⊕ rear drum brake

T - Z

		kW / hp										
COROLLA (_E11_) 04/97→06/02												
2.0 D (CE110_)	04/97→02/00	691000 53 / 72		PRO	92077203	ø 255 x 22 x 48.2				91056700	ø 200 x 37	⊕ rear drum brake ⊕ GB
								Luc		97015800		
										92136000	ø 240 x 10 x 59.7	
									PRO	92169203	ø 265.5 x 9 x 36.3	
										94021200	ø 200,0 x 55	⊕ rear drum brake ⊕ bad road pack.
										94025600	ø 200 x 49	⊕ rear drum brake ⊖ bad road pack.
2.0 D-4D	09/00→11/01	691100 66 / 90	Ake		2329402	[–] 23294 16.5	⊕ J-made	Luc		2381601	[+] 23816 15.8	⊕ GB-made
			Luc		2308801	[+] 23088 17.6	⊕ GB-made			82512300		⊕ GB-made
			Luc		82509400		⊕ GB-made		PRO	92169203	ø 265.5 x 9 x 36.3	
			Ake		82519300		⊕ J-made					
				PRO	92077203	ø 255 x 22 x 48.2						
COROLLA (NZE18_, ZRE18_) 10/12→ → AURIS (NZE18_, ZRE18_), Page 1104												
COROLLA (ZZE12_, NDE12_, ZDE12_) 01/02→02/07												
1.4 D	07/04→02/07	691200 66 / 90	Luc		2376601	[+] 23766 17.8		Luc		2381601	[+] 23816 15.8	
			Luc		82509300					82512300		
			Ake		82063000				PRO	92126303	ø 279 x 9 x 55.5	
				PRO	92126003	ø 275 x 25 x 49.2				91066500	ø 172 x 22	
1.4 VVT-i 1.6 VVT-i	01/02→12/06 01/02→12/06	691300 71 / 97 81 / 110	Luc Ake		2376601 2390401	[+] 23766 17.8 [+] 23904 16.6	⊕ EU-made ⊕ J-made	Sum Luc		2352101 2381601	[+] 23521 14 [+] 23816 15.8	⊕ J-made ⊕ EU-made
			Luc		82509300		⊕ EU-made	Sum		82072500		⊕ J-made
			Ake		82063000					82512300		⊕ EU-made
					92125800	ø 255 x 25 x 49.3	⊕ J-made		PRO	92126103	ø 258 x 9 x 55.5	⊕ EU-made
				PRO	92125803	ø 255 x 25 x 49.3	⊕ J-made		PRO	92126203	ø 269 x 9 x 56	⊕ J-made
				PRO	92125903	ø 255 x 25 x 49.3	⊕ EU-made			91063200	ø 170 x 32	→05/04
										91066500	ø 172 x 22	06/04→
										97031900		→05/04
1.8 VVTi	06/04→02/07	691400 100 / 136	Ake		2386401	[–] 23864 17		Sum		2352101	[+] 23521 14	
			Ake		2351002	[+] 23510 15.5						
1.8 VVTL-i TS	01/02→02/07	691500 141 / 192	Luc		2376601	[+] 23766 17.8	⊕ EU-made	Sum		2352101	[+] 23521 14	⊕ J-made
			Ake		2390401	[+] 23904 16.6	⊕ J-made	Luc		2381601	[+] 23816 15.8	⊕ EU-made
			Luc		82509300		⊕ EU-made	Sum		82072500		⊕ J-made
			Ake		82063000					82512300		⊕ EU-made
				PRO	92125903	ø 255 x 25 x 49.3	⊕ EU-made		PRO	92126103	ø 258 x 9 x 55.5	⊕ GB-made
									PRO	92126203	ø 269 x 9 x 56	⊕ J-made
									PRO	92126303	ø 279 x 9 x 55.5	
										91063200	ø 170 x 32	→05/04
										91066500	ø 172 x 22	06/04→
										97031900		→05/04
1.8 VVTL-i TS	02/05→02/07	691600 165 / 224	Ake		2351002	[+] 23510 15.5	⊕ J-made	Sum		2352101	[+] 23521 14	⊕ J-made
			Luc		2376601	[+] 23766 17.8	⊕ GB-made	Luc		2381601	[+] 23816 15.8	⊕ GB-made

T - Z

		kW / hp										
COROLLA (ZZE12_, NDE12_, ZDE12_) 01/02→02/07												
		691600	Luc		82509300		⊕ GB-made			82512300		⊕ GB-made
1.8 VVTL-i TS	02/05→02/07	165 / 224	Ake		82063000				PRO	92126203	ø 269 x 9 x 56	⊕ J-made
					92125800	ø 255 x 25 x 49.3	⊕ J-made		PRO	92126303	ø 279 x 9 x 55.5	⊕ GB-made
				PRO	92125803	ø 255 x 25 x 49.3	⊕ J-made			91066500	ø 172 x 22	
				PRO	92125903	ø 255 x 25 x 49.3	⊕ EU-made					
		691700	Luc		2376601	[+] 23766 17.8		Luc		2381601	[+] 23816 15.8	
2.0 D-4D	01/02→12/06	66 / 90										
2.0 D-4D	01/02→12/06	81 / 110										
2.0 D-4D	05/03→02/07	85 / 116	Luc		82509300					82512300		
			Ake		82063000				PRO	92126203	ø 269 x 9 x 56	
				PRO	92126003	ø 275 x 25 x 49.2			PRO	92126303	ø 279 x 9 x 55.5	
										91063200	ø 170 x 32	→05/04
										91066500	ø 172 x 22	06/04→
										97031900		→05/04
COROLLA ALTIS Stufenheck (NRE18_, ZRE18_, NDE18_) 06/13→												
→ COROLLA Saloon (NRE18_, ZRE18_, NDE18_), Page 1122												
COROLLA Combi (_E12J_, _E12T_) 12/01→02/07 → COROLLA Estate (_E12J_, _E12T_), Page 1118												
COROLLA Compact (_E10_) 09/94→11/99												
		691800	Sum		2160101	[+] 21601 17.6		Ake		2007601	[+] 20076 15.5	
1.6 i (AE101)	09/94→11/99	78 / 106		PRO	92077203	ø 255 x 22 x 48.2						
COROLLA Compact (_E11_) 04/97→01/02												
		691900	Ake		2329402	[–] 23294 16.5	⊕ J-made	Ake		2007601	[+] 20076 15.5	⊕ rear disc brake 08/98→ →10/99
1.4 (EE111_)	04/97→02/00	63 / 86	Sum		2160101	[+] 21601 17.6	⊕ J-made	Ake		2183301	[+] 21833 15.5	11/99→
			Luc		2308801	[+] 23088 17.6	⊕ GB-made			91043200	ø 200 x 36	⊕ rear drum brake ⊕ J
			Luc		82509400		⊕ GB-made			91056700	ø 200 x 37	⊕ rear drum brake ⊕ GB
			Ake		82519300		⊕ J-made	Luc		97015800		
				PRO	92077203	ø 255 x 22 x 48.2				92136000	ø 240 x 10 x 59.7	
									PRO	92169203	ø 265.5 x 9 x 36.3	
										94021200	ø 200,0 x 55	⊕ rear drum brake ⊕ bad road pack.
										94025600	ø 200 x 49	⊕ rear drum brake ⊖ bad road pack.
		692000	Ake		2329402	[–] 23294 16.5	⊕ J-made	Luc		2401301	[–] 24013 15	⊕ rear disc brake ⊕ ABS ⊕ GB-made
1.4 (ZZE111_)	02/00→01/02	71 / 97	Sum		2160101	[+] 21601 17.6	⊕ J-made	Ake		2183301	[+] 21833 15.5	⊕ rear disc brake ⊕ ABS ⊕ J-made
			Luc		2308801	[+] 23088 17.6	⊕ GB-made	Luc		82037300		⊕ rear disc brake ⊕ ABS ⊕ GB-made
			Luc		82509400		⊕ GB-made			91043200	ø 200 x 36	⊕ rear drum brake
			Ake		82519300		⊕ J-made			91056700	ø 200 x 37	⊕ rear drum brake ⊕ GB
				PRO	92077203	ø 255 x 22 x 48.2		Luc		97015800		
										92136000	ø 240 x 10 x 59.7	
									PRO	92169203	ø 265.5 x 9 x 36.3	
										94021200	ø 200,0 x 55	⊕ rear drum brake ⊕ bad road pack.
										94025600	ø 200 x 49	⊕ rear drum brake ⊖ bad road pack.
		692100	Ake		2329402	[–] 23294 16.5	⊕ J-made	Ake		2007601	[+] 20076 15.5	⊕ rear disc brake 08/98→ →10/99
1.6 (AE111_)	04/97→02/00	81 / 110	Sum		2160101	[+] 21601 17.6	⊕ J-made	Ake		2183301	[+] 21833 15.5	11/99→
1.6 Aut. (AE111_)	04/97→02/00	79 / 107	Luc		2308801	[+] 23088 17.6	⊕ GB-made			91043200	ø 200 x 36	⊕ rear drum brake

	30 kW / hp												
COROLLA Compact (_E11_) 04/97→01/02													
692100		Luc		82509400		⊕ GB-made			91056700	ø 200 x 37	⊕ rear drum brake ⊕ GB
1.6 (AE111_)	04/97→02/00	81 / 110	Ake		82519300		⊕ J-made	Luc		97015800		
1.6 Aut. (AE111_)	04/97→02/00	79 / 107		PRO	92077203	ø 255 x 22 x 48.2				92136000	ø 240 x 10 x 59.7	
									PRO	92169203	ø 265.5 x 9 x 36.3	
										94021200	ø 200,0 x 55	⊕ rear drum brake ⊕ bad road pack.
										94025600	ø 200 x 49	⊕ rear drum brake ⊖ bad road pack.
692200		Ake		2329402	[–] 23294 16.5	⊕ J-made		Luc		2401301	[–] 24013 15	⊕ ABS ⊕ GB-made
1.6 (ZZE112_)	02/00→01/02	81 / 110	Luc		2308801	[+] 23088 17.6	⊕ GB-made	Ake		2183301	[+] 21833 15.5	⊕ ABS ⊕ J-made
			Luc		82509400		⊕ GB-made	Luc		82037300		⊕ ABS ⊕ GB-made
			Ake		82519300		⊕ J-made		PRO	92169203	ø 265.5 x 9 x 36.3	
				PRO	92077203	ø 255 x 22 x 48.2				94025600	ø 200 x 49	⊕ rear drum brake
692300		Ake		2329402	[–] 23294 16.5	⊕ J-made		Luc		2401301	[–] 24013 15	⊕ rear disc brake ⊕ ABS ⊕ GB-made
1.9 D (WZE110_)	02/00→01/02	51 / 69	Sum		2160101	[+] 21601 17.6	⊕ J-made	Ake		2183301	[+] 21833 15.5	⊕ rear disc brake ⊕ ABS ⊕ J-made
			Luc		2308801	[+] 23088 17.6	⊕ GB-made	Luc		82037300		⊕ rear disc brake ⊕ ABS ⊕ GB-made
			Luc		82509400		⊕ GB-made			91043200	ø 200 x 36	⊕ rear drum brake
			Ake		82519300		⊕ J-made			91056700	ø 200 x 37	⊕ rear drum brake ⊕ GB
				PRO	92077203	ø 255 x 22 x 48.2		Sum		97003600		
										92136000	ø 240 x 10 x 59.7	
									PRO	92169203	ø 265.5 x 9 x 36.3	
										94021200	ø 200,0 x 55	⊕ rear drum brake
692400		Ake		2329402	[–] 23294 16.5	⊕ J-made		Ake		2007601	[+] 20076 15.5	⊕ rear disc brake 08/98→ →10/99
2.0 D (CE110_)	04/97→02/00	53 / 72	Sum		2160101	[+] 21601 17.6	⊕ J-made	Ake		2183301	[+] 21833 15.5	11/99→
			Luc		2308801	[+] 23088 17.6	⊕ GB-made			91043200	ø 200 x 36	⊕ rear drum brake
			Luc		82509400		⊕ GB-made			91056700	ø 200 x 37	⊕ rear drum brake ⊕ GB
			Ake		82519300		⊕ J-made	Sum		97003600		
				PRO	92077203	ø 255 x 22 x 48.2				92136000	ø 240 x 10 x 59.7	
									PRO	92169203	ø 265.5 x 9 x 36.3	
										94021200	ø 200,0 x 55	⊕ rear drum brake
692500		Ake		2329402	[–] 23294 16.5	⊕ J-made		Ake		2183301	[+] 21833 15.5	
2.0 D-4D	09/00→01/02	66 / 90	Luc		2308801	[+] 23088 17.6	⊕ GB-made		PRO	92169203	ø 265.5 x 9 x 36.3	
			Luc		82509400		⊕ GB-made			94025600	ø 200 x 49	⊕ rear drum brake
			Ake		82519300		⊕ J-made					
				PRO	92077203	ø 255 x 22 x 48.2						
COROLLA Estate (_E12J_, _E12T_) 12/01→02/07													
692600		Luc		2376601	[+] 23766 17.8			Luc		2381601	[+] 23816 15.8	
1.4 D4-D	07/04→02/07	66 / 90	Luc		82509300			Sum		82072500		
			Ake		82063000					82512300		
				PRO	92126003	ø 275 x 25 x 49.2			PRO	92126303	ø 279 x 9 x 55.5	
										91066500	ø 172 x 22	
692700		Ake		2351002	[+] 23510 15.5	⊕ J-made		Sum		2352101	[+] 23521 14	⊕ J-made
1.4 VVT-i	01/02→02/07	71 / 97										
1.6 VVT-i	01/02→02/07	81 / 110										

		kW / hp												
COROLLA Estate (_E12J_, _E12T_) 12/01→02/07														
		692700	Luc		2376601	[+] 23766 17.8	⊕ EU-made		Luc		2381601	[+] 23816 15.8	⊕ EU-made	
1.4 VVT-i	01/02→02/07	71 / 97												
1.6 VVT-i	01/02→02/07	81 / 110	Luc		82509300		⊕ EU-made		Sum		82072500		⊕ J-made	
			Ake		82063000		08/02→				82512300		⊕ EU-made	
					92125800	ø 255 x 25 x 49.3	⊕ J-made			PRO	92126103	ø 258 x 9 x 55.5	⊕ EU-made	
				PRO	92125803	ø 255 x 25 x 49.3	⊕ J-made			PRO	92126203	ø 269 x 9 x 56	⊕ J-made	
				PRO	92125903	ø 255 x 25 x 49.3	⊕ EU-made				91063200	ø 170 x 32	→05/04	
											91066500	ø 172 x 22	06/04→	
											97031900		→05/04	
		692800	Ake		2351002	[+] 23510 15.5			Sum		2352101	[+] 23521 14		
1.8	06/04→02/07	100 / 136			92226300	ø 255 x 22 x 49			Sum		82072500			
				PRO						PRO	92126203	ø 269 x 9 x 56		
											91063200	ø 170 x 32		
											97031900			
		692900	Ake		2351002	[+] 23510 15.5			Sum		2352101	[+] 23521 14		
1.8 4WD	12/01→02/07	100 / 136			92261200	ø 255 x 25 x 49			Sum		82072500			
				PRO						PRO	92126203	ø 269 x 9 x 56		
											91063200	ø 170 x 32		
											97031900			
		693000	Ake		2386401	[–] 23864 17	⊕ J-made		Sum		2352101	[+] 23521 14	⊕ J-made	
2.0 D-4D	01/02→02/07	66 / 90	Luc		2376601	[+] 23766 17.8	⊕ EU-made		Luc		2381601	[+] 23816 15.8	⊕ EU-made	
			Luc		82509300		⊕ EU-made		Sum		82072500		⊕ J-made	
			Ake		82063000		→05/04				82512300		⊕ EU-made	
					92125800	ø 255 x 25 x 49.3	⊕ J-made			PRO	92126103	ø 258 x 9 x 55.5	⊕ J-made	
				PRO	92125803	ø 255 x 25 x 49.3	⊕ J-made			PRO	92126303	ø 279 x 9 x 55.5	⊕ EU-made	
				PRO	92180303	ø 275 x 25 x 49.3	⊕ EU-made				91063200	ø 170 x 32	→05/04	
											91066500	ø 172 x 22	06/04→	
											97031900		→05/04	
		693100	Luc		2376601	[+] 23766 17.8			Luc		2381601	[+] 23816 15.8		
2.0 D-4D	04/04→02/07	85 / 116	Luc		82509300						82512300			
			Ake		82063000					PRO	92126303	ø 279 x 9 x 55.5		
				PRO	92126003	ø 275 x 25 x 49.2					91066500	ø 172 x 22		
COROLLA Estate (_NZE16_) 05/12→														
		693200	Ake		2445103	[–] 24451 17.2					91053500	ø 200 x 32		
1.8	05/12→	103 / 140	Ake		82074400									
					92156100	ø 255 x 22 x 46.3								
COROLLA FIELDER Kombi (_NZE16_) 05/12→ → COROLLA Estate (_NZE16_), Page 1119														
COROLLA Hatchback (E15) 05/07→														
		693300	Ake		2433601	[–] 24336 17.5			Ake		2461001	[+] 24610 14.3		
1.8 VVTL-i (ZZE152)	05/07→	100 / 136			92163900	ø 295 x 26 x 49.2					92164100	ø 259 x 9 x 30.4		
				PRO	92163903	ø 295 x 26 x 49.2				PRO	92164103	ø 259 x 9 x 30.4		
COROLLA Kombi (_E12J_, _E12T_) 12/01→02/07 → COROLLA Estate (_E12J_, _E12T_), Page 1118														

T - Z

30 kW / hp

COROLLA Kombi (_NZE16_) 05/12→ → COROLLA Estate (_NZE16_), Page 1119

COROLLA Liftback (_E11_) 04/97→01/02

		693400	Ake		2329402	[–] 23294 16.5	⊕ J-made	Ake		2007601	[+] 20076 15.5	⊕ rear disc brake 08/98→ →10/99
1.4 (EE111_)	04/97→02/00	63 / 86	Sum		2160101	[+] 21601 17.6	⊕ J-made	Ake		2183301	[+] 21833 15.5	11/99→
			Luc		2308801	[+] 23088 17.6	⊕ GB-made			91043200	ø 200 x 36	⊕ rear drum brake ⊕ J
			Luc		82509400		⊕ GB-made			91056700	ø 200 x 37	⊕ rear drum brake ⊕ GB
			Ake		82519300		⊕ J-made	Luc		97015800		
				PRO	92077203	ø 255 x 22 x 48.2				92136000	ø 240 x 10 x 59.7	
									PRO	92169203	ø 265.5 x 9 x 36.3	
										94021200	ø 200,0 x 55	⊕ rear drum brake ⊕ bad road pack.
										94025600	ø 200 x 49	⊕ rear drum brake ⊖ bad road pack.
		693500	Ake		2329402	[–] 23294 16.5	⊕ J-made	Luc		2401301	[–] 24013 15	⊕ rear disc brake ⊕ ABS ⊕ GB-made
1.4 (ZZE111_)	02/00→01/02	71 / 97	Sum		2160101	[+] 21601 17.6	⊕ J-made	Ake		2183301	[+] 21833 15.5	⊕ rear disc brake ⊕ ABS ⊕ J-made
1.9 D (WZE110_)	02/00→01/02	51 / 69	Luc		2308801	[+] 23088 17.6	⊕ GB-made	Luc		82037300		⊕ rear disc brake ⊕ ABS ⊕ GB-made
			Luc		82509400		⊕ GB-made			91043200	ø 200 x 36	⊕ rear drum brake
			Ake		82519300		⊕ J-made			91056700	ø 200 x 37	⊕ rear drum brake ⊕ GB
				PRO	92077203	ø 255 x 22 x 48.2		Luc		97015800		
										92136000	ø 240 x 10 x 59.7	
									PRO	92169203	ø 265.5 x 9 x 36.3	
										94021200	ø 200,0 x 55	⊕ rear drum brake ⊕ bad road pack.
										94025600	ø 200 x 49	⊕ rear drum brake ⊖ bad road pack.
		693600	Ake		2329402	[–] 23294 16.5	⊕ J-made	Ake		2007601	[+] 20076 15.5	⊕ rear disc brake 08/98→ →10/99
1.6 (AE111_)	04/97→02/00	81 / 110	Sum		2160101	[+] 21601 17.6	⊕ J-made	Ake		2183301	[+] 21833 15.5	11/99→
1.6 Aut. (AE111_)	04/97→02/00	79 / 107	Luc		2308801	[+] 23088 17.6	⊕ GB-made			91043200	ø 200 x 36	⊕ rear drum brake
			Luc		82509400		⊕ GB-made			91056700	ø 200 x 37	⊕ rear drum brake ⊕ GB
			Ake		82519300		⊕ J-made	Luc		97015800		
				PRO	92077203	ø 255 x 22 x 48.2				92136000	ø 240 x 10 x 59.7	
									PRO	92169203	ø 265.5 x 9 x 36.3	
										94021200	ø 200,0 x 55	⊕ rear drum brake ⊕ bad road pack.
										94025600	ø 200 x 49	⊕ rear drum brake ⊖ bad road pack.
		693700	Ake		2329402	[–] 23294 16.5	⊕ J-made	Luc		2401301	[–] 24013 15	⊕ ABS ⊕ GB-made
1.6 (ZZE112_)	02/00→01/02	81 / 110	Luc		2308801	[+] 23088 17.6	⊕ GB-made	Ake		2183301	[+] 21833 15.5	⊕ ABS ⊕ J-made
			Luc		82509400		⊕ GB-made	Luc		82037300		⊕ ABS ⊕ GB-made
			Ake		82519300		⊕ J-made		PRO	92169203	ø 265.5 x 9 x 36.3	
				PRO	92077203	ø 255 x 22 x 48.2				94021200	ø 200,0 x 55	
		693800	Sum		2160101	[+] 21601 17.6		Ake		2007601	[+] 20076 15.5	
1.8 (AE112)	09/98→11/01	85 / 116		PRO	92077203	ø 255 x 22 x 48.2			PRO	92169203	ø 265.5 x 9 x 36.3	
		693900	Ake		2329402	[–] 23294 16.5	Akebono	Ake		2007601	[+] 20076 15.5	⊕ rear disc brake 08/98→ →10/99
2.0 D (CE110)	04/97→02/00	53 / 72	Sum		2160101	[+] 21601 17.6	Sumitomo	Ake		2183301	[+] 21833 15.5	11/99→
			Ake		82519300		Akebono			91043200	ø 200 x 36	⊕ rear drum brake
				PRO	92077203	ø 255 x 22 x 48.2				91056700	ø 200 x 37	⊕ rear drum brake ⊕ GB

T - Z

		kW / hp										
COROLLA Liftback (_E11_) 04/97→01/02												
		693900							Luc		97015800		
2.0 D (CE110)	04/97→02/00	53 / 72									92136000	ø 240 x 10 x 59.7	
										PRO	92169203	ø 265.5 x 9 x 36.3	
											94021200	ø 200,0 x 55	⊕ rear drum brake ⊕ bad road pack.
											94025600	ø 200 x 49	⊕ rear drum brake ⊖ bad road pack.
		694000	Ake		2329402	[–] 23294 16.5	⊕ J-made		Ake		2183301	[+] 21833 15.5	
2.0 D-4D	09/00→01/02	66 / 90	Luc		2308801	[+] 23088 17.6	⊕ GB-made			PRO	92169203	ø 265.5 x 9 x 36.3	
			Luc		82509400		⊕ GB-made						
			Ake		82519300		⊕ J-made						
				PRO	92077203	ø 255 x 22 x 48.2							
COROLLA RUMION (_AZE15_, _NZE15_, _ZRE15_) 05/10→												
		694100	Ake		2433601	[–] 24336 17.5			Ake		2461001	[+] 24610 14.3	
2.4	05/10→	123 / 167		PRO	92232703	ø 275 x 25 x 46.5							
COROLLA Saloon (_E11_) 04/97→06/02 → COROLLA (_E11_), Page 1114												
COROLLA Saloon (_E12J_, _E12T_) 11/01→07/07												
		694200	Luc		2376601	[+] 23766 17.8			Luc		2381601	[+] 23816 15.8	
1.4 D-4D	07/04→07/07	66 / 90											
2.0 D-4D	06/04→07/07	85 / 116	Luc		82509300						82512300		
			Ake		82063000					PRO	92126303	ø 279 x 9 x 55.5	
				PRO	92126003	ø 275 x 25 x 49.2					91066500	ø 172 x 22	
		694300	Ake		2433601	[–] 24336 17.5	11.2006→		Luc		2381601	[+] 23816 15.8	
1.4 VVT-i	08/02→07/07	71 / 97	Luc		2376601	[+] 23766 17.8	→10.2006				82512300		
			Ake		82074400		11.2006→			PRO	92126103	ø 258 x 9 x 55.5	
			Luc		82509300		→10.2006				91063200	ø 170 x 32	→05/04
			Ake		82063000						91066500	ø 172 x 22	06/04→
				PRO	92125903	ø 255 x 25 x 49.3					97031900		→05/04
		694400	Luc		2376601	[+] 23766 17.8			Luc		2381601	[+] 23816 15.8	
1.6 VVT-i	08/02→07/07	81 / 110	Luc		82509300						82512300		
			Ake		82063000					PRO	92126103	ø 258 x 9 x 55.5	
				PRO	92125903	ø 255 x 25 x 49.3					91063200	ø 170 x 32	→05/04
											91066500	ø 172 x 22	06/04→
											97031900		→05/04
		694500	Ake		2386401	[–] 23864 17			Sum		2352101	[+] 23521 14	
1.8	11/01→07/07	100 / 136	Ake		2351002	[+] 23510 15.5							
		694600	Luc		2376601	[+] 23766 17.8			Luc		2381601	[+] 23816 15.8	
2.0 D-4D	08/02→07/07	66 / 90	Luc		82509300						82512300		
			Ake		82063000					PRO	92126303	ø 279 x 9 x 55.5	
				PRO	92126003	ø 275 x 25 x 49.2					91063200	ø 170 x 32	→05/04
											91066500	ø 172 x 22	06/04→
											97031900		→05/04
COROLLA Saloon (E15_) 01/07→												
		694700	Ake		2433601	[–] 24336 17.5			Ake		2461001	[+] 24610 14.3	
1.33	01/07→	74 / 101											
1.4 VVT-i	01/07→	71 / 97											

T - Z

		kW / hp												
COROLLA Saloon (E15_) 01/07→														
1.6	01/09→	97 / 132	Ake		**82074400**				Ake		**82509700**			
1.6 Dual VVTi	01/07→	91 / 124			**92163800**	ø 275 x 22 x 46.3					**92164100**	ø 259 x 9 x 30.4		
				PRO	**92163803**	ø 275 x 22 x 46.3				PRO	**92164103**	ø 259 x 9 x 30.4		
		694800	Ake		**2433601**	[–] 24336 17.5			Ake		**2461001**	[+] 24610 14.3		
1.4 D-4D	01/07→	66 / 90	Bos		**82054200**				Bos		**82054300**			
					92163700	ø 273 x 26 x 49.2					**92164100**	ø 259 x 9 x 30.4		
				PRO	**92163703**	ø 273 x 26 x 49.2				PRO	**92164103**	ø 259 x 9 x 30.4		
		694900	Bos		**2420401**	[+] 24204 19.2			Bos		**2466401**	[+] 24664 16		
1.8	01/09→	108 / 147												
1.8	08/10→	106 / 144												
1.8 VVTi	08/10→	103 / 140	Bos		**82054200**				Bos		**82054300**			
					92163900	ø 295 x 26 x 49.2					**92164100**	ø 259 x 9 x 30.4		
				PRO	**92163903**	ø 295 x 26 x 49.2				PRO	**92164103**	ø 259 x 9 x 30.4		
		695000	Ake		**2433601**	[–] 24336 17.5			Ake		**2461001**	[+] 24610 14.3		
1.8	08/10→	111 / 151												
1.8 VVTL-i (ZZE152)	05/07→	100 / 136												
2.0 D-4D	01/07→	93 / 126	Bos		**82054200**				Bos		**82054300**			
					92163900	ø 295 x 26 x 49.2					**92164100**	ø 259 x 9 x 30.4		
				PRO	**92163903**	ø 295 x 26 x 49.2				PRO	**92164103**	ø 259 x 9 x 30.4		
COROLLA Saloon (NRE18_, ZRE18_, NDE18_) 06/13→														
		695100	Bos		**2569801**	[+] 25698 18.7			Ake		**2461001**	[+] 24610 14.3		
1.33	06/13→	73 / 99												
1.4 D-4D	06/13→	66 / 90		PRO	**92257703**	ø 277 x 26 x 49.2					**92164000**	ø 270 x 10 x 36.8		
										PRO	**92164003**	ø 270 x 10 x 36.8		
		695200	Ake		**2433601**	[–] 24336 17.5	⊕ brake assist		Ake		**2461001**	[+] 24610 14.3		
1.6	06/13→	97 / 132												
			Bos		**2569801**	[+] 25698 18.7	⊖ brake assist		Ake		**2501601**	[+] 25016 14.3	⊕ brake assist	
					92163800	ø 275 x 22 x 46.3	⊕ brake assist				**92164100**	ø 259 x 9 x 30.4		
				PRO	**92163803**	ø 275 x 22 x 46.3	⊕ brake assist			PRO	**92164103**	ø 259 x 9 x 30.4		
				PRO	**92257703**	ø 277 x 26 x 49.2	⊖ brake assist							
		695300	Ake		**2433601**	[–] 24336 17.5	⊕ brake assist		Ake		**2461001**	[+] 24610 14.3	⊖ ABS	
1.8 VVTi	06/13→	103 / 140												
			Bos		**2569801**	[+] 25698 18.7	⊖ brake assist		Ake		**2501601**	[+] 25016 14.3	⊕ ABS	
					92163800	ø 275 x 22 x 46.3	⊕ ABS				**92164000**	ø 270 x 10 x 36.8	⊖ ABS	
				PRO	**92163803**	ø 275 x 22 x 46.3	⊕ ABS				**92164100**	ø 259 x 9 x 30.4	⊕ ABS	
				PRO	**92257703**	ø 277 x 26 x 49.2	⊖ ABS			PRO	**92164003**	ø 270 x 10 x 36.8	⊖ ABS	
										PRO	**92164103**	ø 259 x 9 x 30.4	⊕ ABS	

COROLLA Schrägheck (E15) 05/07→ → COROLLA Hatchback (E15), Page 1119

COROLLA SECCA Compact (_E10_, AE102) 09/94→11/99 → COROLLA Compact (_E10_), Page 1117

COROLLA SECCA Hatchback (_E10_, AE102) 09/94→11/99 → COROLLA Compact (_E10_), Page 1117

COROLLA Stufenheck (_E11_) 04/97→06/02 → COROLLA (_E11_), Page 1114

COROLLA Stufenheck (_E12J_, _E12T_) 11/01→07/07 → COROLLA Saloon (_E12J_, _E12T_), Page 1121

COROLLA Stufenheck (E15_) 01/07→ → COROLLA Saloon (E15_), Page 1121

COROLLA Stufenheck (NRE18_, ZRE18_, NDE18_) 06/13→ → COROLLA Saloon (NRE18_, ZRE18_, NDE18_), Page 1122

COROLLA Verso (ZDE12_, CDE12_) 09/01→05/04														
		695400	Ake		**2351002**	[+] 23510 15.5			Sum		**2352101**	[+] 23521 14		
1.6 VVT-i	01/02→05/04	81 / 110	Ake		**82515000**				Sum		**82072500**			
					92125800	ø 255 x 25 x 49.3				PRO	**92126203**	ø 269 x 9 x 56		

T - Z

COROLLA Verso (ZDE12_, CDE12_) 09/01→05/04

		kW / hp										
1.6 VVT-i	01/02→05/04	695400 81 / 110		PRO	92125803	ø 255 x 25 x 49.3				91063200	ø 170 x 32	
										97031900		
1.8	09/01→05/04	695500 92 / 125	Ake		2386401	[–] 23864 17	Ø 275 mm	Sum		2352101	[+] 23521 14	
			Ake		2351002	[+] 23510 15.5	Ø 255 mm	Sum		82072500		
			Ake		82515000				PRO	92126203	ø 269 x 9 x 56	
					92125800	ø 255 x 25 x 49.3				91063200	ø 170 x 32	
				PRO	92125803	ø 255 x 25 x 49.3				97031900		
				PRO	92180303	ø 275 x 25 x 49.3						
1.8 VVT-i	01/02→05/04	695600 99 / 135	Ake		2386401	[–] 23864 17		Sum		2352101	[+] 23521 14	
2.0 D-4D	01/02→05/04	66 / 90	Ake		82515000			Sum		82072500		
				PRO	92180303	ø 275 x 25 x 49.3	⊕ EU-made		PRO	92126203	ø 269 x 9 x 56	
										91063200	ø 170 x 32	
										97031900		
1.8 VVTi 4WD	10/01→02/04	695700 99 / 135	Bos		2376802	[+] 23768 19		Bos		2362002	[+] 23620 16.6	
2.0 D-4D	09/01→05/04	85 / 116	Bos		82054200			Bos		82054300		
				PRO	92168003	ø 295 x 26 x 49				92164800	ø 290 x 10 x 57	
									PRO	92164803	ø 290 x 10 x 57	

COROLLA Verso (ZER_, ZZE12_, R1_) 03/04→03/09

1.3 VVTi	03/04→03/09	695800 64 / 87	Bos		2376802	[+] 23768 19		Bos		2362002	[+] 23620 16.6	
1.4 D-4D	03/04→03/09	66 / 90	Bos		82054200			Bos		82054300		
1.5	03/04→03/09	80 / 109										
1.6	04/04→03/09	81 / 110										
1.8	03/04→03/09	92 / 125	Bos		82063800					92164800	ø 290 x 10 x 57	
1.8	04/04→03/09	95 / 129										
2.0 D-4D	04/04→03/09	85 / 116	Bos		82510100				PRO	92164803	ø 290 x 10 x 57	
2.2 D-4D	10/05→03/09	100 / 136										
2.2 D-4D	10/05→03/09	130 / 177		PRO	92168003	ø 295 x 26 x 49				91074300	ø 185 x 32	

COROLLA Wagon (__E11_) 04/97→10/01

1.4 (EE111_)	04/97→02/00	695900 63 / 86	Ake		2329402	[–] 23294 16.5	⊕ J-made	Ake		2007601	[+] 20076 15.5	⊕ rear disc brake 08/98→ →10/99
			Sum		2160101	[+] 21601 17.6	⊕ J-made	Ake		2183301	[+] 21833 15.5	11/99→
			Luc		2308801	[+] 23088 17.6	⊕ GB-made			91043200	ø 200 x 36	⊕ rear drum brake ⊕ J
			Luc		82509400		⊕ GB-made			91056700	ø 200 x 37	⊕ rear drum brake ⊕ GB
			Ake		82519300		⊕ J-made	Luc		97015800		
				PRO	92077203	ø 255 x 22 x 48.2				92136000	ø 240 x 10 x 59.7	
									PRO	92169203	ø 265.5 x 9 x 36.3	
										94021200	ø 200,0 x 55	⊕ rear drum brake ⊕ bad road pack.
										94025600	ø 200 x 49	⊕ rear drum brake ⊖ bad road pack.
1.4 16V (ZZE111_)	02/00→10/01	696000 71 / 97	Ake		2329402	[–] 23294 16.5	Akebono	Luc		2401301	[–] 24013 15	⊕ rear disc brake ⊕ ABS ⊕ GB-made
1.9 D (WZE110_)	02/00→10/01	51 / 69	Sum		2160101	[+] 21601 17.6	Sumitomo	Ake		2183301	[+] 21833 15.5	⊕ rear disc brake ⊕ ABS ⊕ J-made
			Ake		82519300		Akebono	Luc		82037300		⊕ rear disc brake ⊕ ABS ⊕ GB-made
				PRO	92077203	ø 255 x 22 x 48.2				91043200	ø 200 x 36	⊕ rear drum brake
										91056700	ø 200 x 37	⊕ rear drum brake ⊕ GB
								Luc		97015800		
										92136000	ø 240 x 10 x 59.7	

T - Z

		kW / hp											
COROLLA Wagon (__E11_) 04/97→10/01													
		696000											
1.4 16V (ZZE111_)	02/00→10/01	71 / 97								92169203	ø 265.5 x 9 x 36.3	
1.9 D (WZE110_)	02/00→10/01	51 / 69								94021200	ø 200,0 x 55	⊕ rear drum brake ⊕ bad road pack.
										94025600	ø 200 x 49	⊕ rear drum brake ⊖ bad road pack.
		696100	Ake		2329402	[–] 23294 16.5	Akebono	Ake		2007601	[+] 20076 15.5	⊕ rear disc brake 08/98→ →10/99
1.6 (AE111_)	04/97→02/00	81 / 110										
1.6 Aut. (AE111_)	04/97→02/00	79 / 107	Sum		2160101	[+] 21601 17.6	Sumitomo	Ake		2183301	[+] 21833 15.5	11/99→
1.8 4WD (AE115_)	04/97→10/01	81 / 110										
			Ake		82519300		Akebono			91043200	ø 200 x 36	⊕ rear drum brake
				PRO	92077203	ø 255 x 22 x 48.2				91056700	ø 200 x 37	⊕ rear drum brake ⊕ GB
								Luc		97015800		
										92136000	ø 240 x 10 x 59.7	
									PRO	92169203	ø 265.5 x 9 x 36.3	
										94021200	ø 200,0 x 55	⊕ rear drum brake ⊕ bad road pack.
										94025600	ø 200 x 49	⊕ rear drum brake ⊖ bad road pack.
		696200	Ake		2329402	[–] 23294 16.5	⊕ J-made	Luc		2401301	[–] 24013 15	⊕ rear disc brake ⊕ ABS ⊕ GB-made
1.6 16V (ZZE112_)	02/00→10/01	81 / 110	Luc		2308801	[+] 23088 17.6	⊕ GB-made	Ake		2183301	[+] 21833 15.5	⊕ rear disc brake ⊕ ABS ⊕ J-made
			Luc		82509400		⊕ GB-made	Luc		82037300		⊕ rear disc brake ⊕ ABS ⊕ GB-made
			Ake		82519300		⊕ J-made			91043200	ø 200 x 36	⊕ rear drum brake
				PRO	92077203	ø 255 x 22 x 48.2			PRO	92169203	ø 265.5 x 9 x 36.3	⊕ rear disc brake
										94025600	ø 200 x 49	⊕ rear drum brake
		696300	Ake		2329402	[–] 23294 16.5	Akebono	Ake		2007601	[+] 20076 15.5	
2.0 D (CE110_)	04/97→02/00	53 / 72	Sum		2160101	[+] 21601 17.6	Sumitomo	Ake		2183301	[+] 21833 15.5	11/99→
			Ake		82519300		Akebono			91043200	ø 200 x 36	⊕ rear drum brake
				PRO	92077203	ø 255 x 22 x 48.2				91056700	ø 200 x 37	⊕ rear drum brake ⊕ GB
								Luc		97015800		
										92136000	ø 240 x 10 x 59.7	
									PRO	92169203	ø 265.5 x 9 x 36.3	
										94021200	ø 200,0 x 55	⊕ rear drum brake ⊕ bad road pack.
										94025600	ø 200 x 49	⊕ rear drum brake ⊖ bad road pack.
		696400	Luc		2376601	[+] 23766 17.8		Luc		2381601	[+] 23816 15.8	
2.0 D-4D	04/97→10/01	85 / 116	Luc		82509300					82512300		
				PRO	92126003	ø 275 x 25 x 49.2			PRO	92126303	ø 279 x 9 x 55.5	
										91066500	ø 172 x 22	
		696500	Ake		2329402	[–] 23294 16.5	⊕ J-made	Ake		2183301	[+] 21833 15.5	
2.0 D-4D	09/00→10/01	66 / 90	Luc		2308801	[+] 23088 17.6	⊕ GB-made		PRO	92126303	ø 279 x 9 x 55.5	⊕ GB-made
			Luc		82509400		⊕ GB-made		PRO	92169203	ø 265.5 x 9 x 36.3	
			Ake		82519300		⊕ J-made					
				PRO	92077203	ø 255 x 22 x 48.2						
CORSA Hatchback 11/94→09/99												
		696600	Ake		2087001	[o] 20870 15				91046900	ø 180 x 28	
1.3	11/94→09/99	65 / 88										
1.5	11/94→09/99	70 / 95										
		696700	Ake		2087001	[o] 20870 15				91036100	ø 180 x 32	
1.5 D	11/94→09/99	40 / 54										

T - Z

		kW / hp											
CORSA Saloon 11/94→09/99													
		696800	Ake		2087001	[o] 20870 15							
1.3	11/94→09/99	65 / 88											
1.5	11/94→09/99	70 / 95											
1.5 D	11/94→09/99	40 / 54											
CORSA Schrägheck 11/94→09/99 → CORSA Hatchback, Page 1124													
CORSA Stufenheck 11/94→09/99 → CORSA Saloon, Page 1125													
CROWN Saloon (CRS_, JZS_, GRS18_, UZS_) 09/03→02/08													
		696900		PRO	92174303	ø 296 x 28 x 49.5				2490201	[+] 24902 15.5		
2.5 Athlete	09/03→02/08	158 / 215											
3.0	09/03→02/08	188 / 256								PRO 92179803	ø 291 x 10 x 61		
3.0 4WD	09/03→02/08	188 / 256											
		697000								2490201	[+] 24902 15.5		
3.0	09/04→02/08	170 / 231											
		697100	Ake		2392801	[–] 23928 17				2490201	[+] 24902 15.5		
4.3 Royal Saloon	09/03→02/08	206 / 280											
4.3 Royal Saloon 4WD	09/03→02/08	206 / 280								92148000	ø 310 x 18 x 67.3		
CROWN Saloon (GRS20_) 02/08→11/12													
		697200	Ake		2386401	[–] 23864 17				2490201	[+] 24902 15.5		
2.5 V6	02/08→11/12	149 / 203											
2.5 V6 4WD	02/08→11/12	149 / 203		PRO	92174303	ø 296 x 28 x 49.5				PRO 92179803	ø 291 x 10 x 61		
3.0	02/08→11/12	167 / 227											
3.0	02/08→11/12	188 / 256											
3.0 4WD	02/08→11/12	188 / 256											
		697300	Adv		2032501	[+] 20325 17.5				2432301	[+] 24323 15.5		
3.5 Hybrid	02/08→11/12	218 / 296											
3.5 V6	02/08→11/12	232 / 316								92148000	ø 310 x 18 x 67.3		
		697400	Ake		2392801	[–] 23928 17				2490201	[+] 24902 15.5		
4.3 V8 4WD	04/09→11/12	206 / 280											
										92148000	ø 310 x 18 x 67.3		
		697500	Adv		2032501	[+] 20325 17.5				2490201	[+] 24902 15.5		
4.6	04/09→11/12	255 / 347											
										92148000	ø 310 x 18 x 67.3		
CROWN Stufenheck (CRS_, JZS_, GRS18_, UZS_) 09/03→02/08 → CROWN Saloon (CRS_, JZS_, GRS18_, UZS_), Page 1125													
CROWN Stufenheck (GRS20_) 02/08→11/12 → CROWN Saloon (GRS20_), Page 1125													
CYNOS Coupe (EL54) 08/95→04/00 → PASEO Coupe (EL54), Page 1135													
DUET (M11_, M10_) 09/98→04/04													
		697600	Ake		2349701	[+] 23497 15.5							
1.0	09/98→04/04	40 / 54			92129100	ø 234 x 16 x 41							
DYNA 400 Platform/Chassis (XZU_) 10/00→													
		697700			2929601	[+] 29296 20							
4.6 D	10/00→	88 / 120											
DYNA 400 Pritsche/Fahrgestell (XZU_) 10/00→ → DYNA 400 Platform/Chassis (XZU_), Page 1125													
DYNA Platform/Chassis (KD_, LY_, TRY2_, KDY2_, XZU4_, XZU3_, 08/01→													
		697800	Sum		2146801	[–] 21468 15.5				94021000	ø 295,0 x 67		
2.0	09/06→	98 / 133											
2.0 4WD	09/06→	98 / 133											
		697900	Sum		2146801	[–] 21468 15.5							
2.0 LPG	09/06→	85 / 116											
2.0 LPG 4WD	09/06→	85 / 116											
3.0 D4d	09/06→	106 / 144											
3.0 D4d 4WD	09/06→	106 / 144											
4.6 D4d	06/03→	96 / 131											
		698000	Sum		2146801	[–] 21468 15.5				91041500	ø 295 x 50		
2.5 D4d	08/01→	65 / 88											
2.5 D4d	08/01→	75 / 102								94021000	ø 295,0 x 67		
3.0 D4d	08/01→	65 / 88											
3.0 D4d	09/06→	80 / 109											
DYNA Pritsche/Fahrgestell (KD_, LY_, TRY2_, KDY2_, XZU4_, XZ 08/01→ → DYNA Platform/Chassis (KD_, LY_, TRY2_, KDY2_, XZU4_, XZU3_,, Page 1125													
ECHO (SCP1_, NLP1_, NCP1_) 04/99→09/05 → YARIS (SCP1_, NLP1_, NCP1_), Page 1144													
ECHO Saloon 04/99→08/05													
		698100	Ake		2334803	[+] 23348 16.5							
1.5 VVTi	04/99→08/05	78 / 106		PRO	92103603	ø 235 x 18 x 43.2							
ECHO Stufenheck 04/99→08/05 → ECHO Saloon, Page 1125													
ESTIMA (MCR3_, ACR3_, CLR3_) 02/00→01/06 → PREVIA (MCR3_, ACR3_, CLR3_), Page 1136													
ESTIMA (TCR2_, TCR1_) 05/90→08/00 → PREVIA (TCR2_, TCR1_), Page 1136													
ESTIMA III (ACR5_, GSR5_) 10/05→ → PREVIA III (ACR5_, GSR5_), Page 1137													

T - Z

		kW / hp											
FJ CRUISER (GSJ1_) 01/06→													
		698200	Sum		2402401	[+] 24024 17.8		Sum		2194701	[–] 21947 15	
4.0 i V6	12/10→	200 / 272										
4.0 i V6	01/11→	203 / 276		PRO	92230403	ø 319 x 28 x 67.2				91066100	ø 215 x 45	
4.0 i V6 4WD	12/10→	193 / 262										
4.0 VVTi	01/06→12/11	178 / 242										
4.0 VVTi 4WD	01/06→12/11	178 / 242										
FORTUNER Closed Off-Road Vehicle (TGN6_, KUN6_, GGN6_, TGN5_ 06/04→													
		698300	Sum		2168001	[+] 21680 15				91066300	ø 295 x 62	
2.5 D-4D 4WD	01/09→	75 / 102										
2.5 D-4D 4WD	01/09→	106 / 144	Sum		2168003	[+] 21680 17.5						
3.0 D 4WD	06/04→	120 / 163										
3.0 D 4WD	08/09→	125 / 170	Sum		82516500							
					92222600	ø 297 x 25 x 67.4						
		698400	Sum		2168001	[+] 21680 15				91066300	ø 295 x 62	07/05→
2.7 VVTi	06/04→	118 / 160										
2.7 VVTi 4WD	06/04→	118 / 160	Sum		2168003	[+] 21680 17.5						
			Sum		82516500							
					92222600	ø 297 x 25 x 67.4						
		698500	Sum		2402401	[+] 24024 17.8				91066300	ø 295 x 62	
4.0 VVTi 4WD	01/10→	175 / 238										
				PRO	92230403	ø 319 x 28 x 67.2						
FORTUNER Geländewagen geschlossen (TGN6_, KUN6_, GGN6_, TGN5 06/04→ → FORTUNER Closed Off-Road Vehicle (TGN6_, KUN6_, GGN6_, TGN5_, Page 1126													
FUN CARGO (_NLP2_, _NCP2_) 08/99→09/05 → YARIS VERSO (_NLP2_, _NCP2_), Page 1145													
GAIA (CXM1_, SXM1_, ACM1_) 05/98→10/03													
		698600	Sum		2160101	[+] 21601 17.6				91051000	ø 228.6 x 41.5	
2.0 VVTi	05/98→10/03	112 / 152										
2.0 VVTi 4WD	05/98→10/03	112 / 152	Ake		82033400			Sum		97028900		
2.2 TD	10/98→10/03	69 / 94										
					92077600	ø 255 x 28 x 49.2				94029400	ø 228,6 x 50	
GRANVIA (_H2_, _H1_) 08/95→													
		698700	Sum		2146801	[–] 21468 15.5		Sum		2178601	[o] 21786 15.5	⊕ rear disc brake
2.4	08/95→	100 / 136										
2.7	08/95→	112 / 152								91050900	ø 270 x 57	⊕ rear drum brake
3.0 TDi	08/95→	96 / 131			92113000	ø 285 x 28 x 45.5						
3.4	08/95→	140 / 190								94034200	ø 270 x 66.5	⊕ rear drum brake
GT 86 Coupe (ZN6_) 03/12→													
		698800	Tok		2576001	[+] 25760 16.7		Ake		2427101	[+] 24271 14.7	15" -brake
2.0 GT	03/12→	147 / 200										
			Tok		82502900			NBK		2485401	[+] 24854 16	16" -brake
					92139500	ø 294 x 24 x 56.7	16" -brake	Ake		82518100		
				PRO	92094603	ø 276.5 x 24 x 56.8	15" -brake			92200000	ø 286 x 10 x 63	15" -brake
HARRIER (MCU3_, MHU3_, ACU3_, GSU3_) 10/03→													
		698900	Ake		2373401	[–] 23734 17		Sum		2396701	[–] 23967 15.2	
2.4 VVTi	10/03→	118 / 160										
3.0 VVTi 4WD	10/03→12/08	150 / 204		PRO	92171503	ø 319 x 28 x 49.5				92171603	ø 288 x 10 x 69.3	
3.3 Hybrid	04/05→12/08	155 / 211										
3.3 VVTi 4WD	10/03→12/08	171 / 233										
3.5 VVTi 4WD	04/05→12/08	206 / 280										
HARRIER (SXU1_, MCU1_, ACU1_) 03/98→01/03													
		699000	Ake		2351302	[+] 23513 17		Ake		2183301	[+] 21833 15.5	
2.2 4WD	03/98→01/03	103 / 140										
2.4	06/00→01/03	118 / 160			92235200	ø 296 x 28 x 49.5		Ake		82502500		
2.4 4WD	06/00→01/03	118 / 160										
3.0 4WD	03/98→01/03	164 / 223								92117000	ø 288 x 10 x 64.7	
										91059400	ø 170 x 40	
HIACE / COMMUTER IV (TRH2_, KDH2_) 01/05→													
		699100	Sum		2468001	[–] 24680 15.5				94037300	ø 254 x 61	→08/09
2.0	11/08→	98 / 133										
2.5 D-4D	09/06→	75 / 102	Ais		82509200							
2.5 D-4D (KDH222)	09/06→	80 / 109										
2.5 D-4D 4WD	01/05→	94 / 128			92234900	ø 285 x 28 x 48.6						
2.7 VVTi	01/05→	111 / 151										
3.0 D	01/05→	100 / 136										
3.0 D	11/08→	106 / 144										
3.0 D (KDH223)	11/06→	80 / 109										

T - Z

		kW / hp										
HIACE III Box (YH7_, LH6_, LH7_, LH5_, YH5_, YH6_) 08/89→08/04												
		699200	Sum		**2146801**	[–] 21468 15.5				**91050900**	ø 270 x 57	
2.5 D-4D 4WD	08/01→08/04	65 / 88			**92113000**	ø 285 x 28 x 45.5				**94034200**	ø 270 x 66.5	
		699300	Sum		**2168901**	[–] 21689 15.5						
2.8 D	08/89→08/00	61 / 83			**92080300**	ø 255 x 25 x 46.5						
		699400	Sum		**2146801**	[–] 21468 15.5						
3.0 D	08/98→08/04	65 / 88										
HIACE III Kasten (YH7_, LH6_, LH7_, LH5_, YH5_, YH6_) 08/89→08/04 → HIACE III Box (YH7_, LH6_, LH7_, LH5_, YH5_, YH6_), Page 1127												
HIACE III Wagon (LH1_, RZH1_) 08/89→08/04												
		699500	Sum		**2146801**	[–] 21468 15.5				**91050900**	ø 270 x 57	
2.4	11/96→08/04	85 / 116			**92113000**	ø 285 x 28 x 45.5				**94034200**	ø 270 x 66.5	
		699600	Sum		**2146801**	[–] 21468 15.5				**91050900**	ø 270 x 57	
2.5 D-4D 4WD	08/01→08/04	75 / 102			**92113000**	ø 285 x 28 x 45.5						
		699700	Sum		**2168901**	[–] 21689 15.5						
2.8 D	08/89→08/00	61 / 83			**92080300**	ø 255 x 25 x 46.5						
		699800	Sum		**2168901**	[–] 21689 15.5						
3.0 D	08/98→08/04	65 / 88										
HIACE IV Box (LXH1_, RZH1_, LH1_) 08/95→08/06												
		699900	Sum		**2146801**	[–] 21468 15.5				**91050900**	ø 270 x 57	
2.4 (RCH12_, RCH22_)	08/95→02/05	85 / 116			**92113000**	ø 285 x 28 x 45.5				**94034200**	ø 270 x 66.5	
2.4 D	09/95→08/01	55 / 75										
2.4 D (LXH12_, LXH22_)	08/95→08/06	58 / 79										
2.4 i (RZH10)	08/95→02/05	88 / 120										
2.4 TD (LXH12_, LXH22_)	08/95→08/06	66 / 90										
2.5 D-4D	11/01→08/06	65 / 88										
2.5 D-4D	11/01→08/06	75 / 102										
2.5 D-4D 4WD	11/01→08/06	75 / 102										
2.7 (RCH13_, RCH23_)	04/98→08/06	105 / 143										
2.7 4WD (RCH19_, RCH29_)	04/98→	106 / 144										
		700000	Sum		**2146801**	[–] 21468 15.5				**91050900**	ø 270 x 57	
2.4 TD 4WD (LXH18_, LXH28_)	08/95→08/06	66 / 90			**92238100**	ø 285 x 28 x 48.4				**94034200**	ø 270 x 66.5	
		700100	Sum		**2468001**	[–] 24680 15.5				**94037300**	ø 254 x 61	→08/09
2.5 D-4D	09/06→	70 / 95										
2.5 D-4D	09/06→	86 / 117	Ais		**82509200**							
2.5 D-4D 4WD	09/06→	86 / 117			**92234900**	ø 285 x 28 x 48.6						
HIACE IV Box (TRH2_, KDH2_) 01/05→												
		700200	Sum		**2468001**	[–] 24680 15.5				**94037300**	ø 254 x 61	→08/09
2.0	11/08→	98 / 133										
2.5 D-4D	09/06→	70 / 95										
2.5 D-4D	09/06→	75 / 102	Ais		**82509200**							
2.5 D-4D (KDH200, KDH220)	09/06→	80 / 109										
2.7 VVTi (TRH201, TRH221)	01/05→	111 / 151			**92234900**	ø 285 x 28 x 48.6						
3.0 D	01/05→	100 / 136										
3.0 D	11/08→	106 / 144										
3.0 D (KDH201, KDH221)	11/06→	80 / 109										
HIACE IV Bus (LH1_) 08/95→08/06												
		700300	Sum		**2146801**	[–] 21468 15.5				**91050900**	ø 270 x 57	
2.4 D	08/95→08/06	58 / 79			**92113000**	ø 285 x 28 x 45.5				**94034200**	ø 270 x 66.5	
2.4 D	07/99→08/06	55 / 75										
2.4 TD (LXH12_, LXH22_)	08/95→08/06	66 / 90										
2.5 D-4D	11/01→08/06	65 / 88										
2.5 D-4D	11/01→08/06	75 / 102										
2.7	11/01→08/06	106 / 144										
2.7 (RCH13_, RCH23_)	04/98→11/01	105 / 143										
2.7 4WD (RCH19_)	04/98→08/06	105 / 143										
		700400	Sum		**2146801**	[–] 21468 15.5				**91050900**	ø 270 x 57	
2.4 TD 4WD (H18/28)	08/95→08/06	66 / 90			**92238100**	ø 285 x 28 x 48.4				**94034200**	ø 270 x 66.5	
		700500	Sum		**2468001**	[–] 24680 15.5				**94037300**	ø 254 x 61	→08/09
2.5 D-4D	08/06→	70 / 95										
2.5 D-4D	08/06→	86 / 117	Ais		**82509200**							
2.5 D-4D 4WD	10/06→	86 / 117			**92234900**	ø 285 x 28 x 48.6						
HIACE IV Kasten (LXH1_, RZH1_, LH1_) 08/95→08/06 → HIACE IV Box (LXH1_, RZH1_, LH1_), Page 1127												
HIACE IV Kasten (TRH2_, KDH2_) 01/05→ → HIACE IV Box (TRH2_, KDH2_), Page 1127												

kW / hp										
HIACE SBV IV Box (LXH1_, RZH1_, LH1_) 08/95→08/06 → HIACE IV Box (LXH1_, RZH1_, LH1_), Page 1127										
HIACE SBV IV Kasten (LXH1_, RZH1_, LH1_) 08/95→08/06 → HIACE IV Box (LXH1_, RZH1_, LH1_), Page 1127										
HIGHLANDER (_MCU2_, _ACU2_) 06/00→05/07 → KLUGER (_MCU2_, _ACU2_), Page 1131										
HIGHLANDER (_MHU4_, _GSU4_, _ASU4_) 05/07→ → KLUGER (_MHU4_, _GSU4_, _ASU4_), Page 1132										
HILUX (VIGO) III Pickup (TGN1_, GGN2_, GGN1_, KUN2_, KUN1_) 02/05→ → HILUX III Pickup (TGN1_, GGN2_, GGN1_, KUN2_, KUN1_), Page 1129										
HILUX (VIGO) III Pick-up (TGN1_, GGN2_, GGN1_, KUN2_, KUN1_) 02/05→ → HILUX III Pickup (TGN1_, GGN2_, GGN1_, KUN2_, KUN1_), Page 1129										
HILUX II Pickup (RN6_, RN5_, LN6_, YN6_, YN5_, LN5_) 08/88→07/05										
2.0	08/97→07/05	700600 81 / 110	Sum		**2167901**	[+] 21679 15			**91041500**	ø 295 x 50
									94021000	ø 295,0 x 67
2.4 D	08/88→07/05	700700 61 / 83	Ake		**2115801**	[–] 21158 15.6	⊕ rear disc brake Akebono		**91028000**	ø 254 x 58
2.4 D	01/92→07/05	59 / 80	Sum		**2178401**	[+] 21784 15	⊕ rear disc brake Sumitomo		**94018300**	ø 254,0 x 66.5
			Ake		**82048300**					
					91051700	ø 279.4 x 52	drum brake			
					92080300	ø 255 x 25 x 46.5	⊕ rear disc brake			
2.4 D	03/95→07/05	700800 58 / 79	Ake		**2115801**	[–] 21158 15.6	⊕ rear disc brake Akebono		**91028000**	ø 254 x 58
			Sum		**2178401**	[+] 21784 15	⊕ rear disc brake Sumitomo		**94021000**	ø 295,0 x 67
			Ake		**82048300**					
					91051700	ø 279.4 x 52	drum brake			
					92080300	ø 255 x 25 x 46.5	⊕ rear disc brake			
2.4 D (LN150, LN145)	07/98→01/02	700900 55 / 75	Ake		**2115801**	[–] 21158 15.6	⊕ rear disc brake Akebono		**91028000**	ø 254 x 58
2.5 D-4D	11/01→07/05	65 / 88	Sum		**2178401**	[+] 21784 15	⊕ rear disc brake Sumitomo		**94018300**	ø 254,0 x 66.5
			Ake		**82048300**					
					92080300	ø 255 x 25 x 46.5	⊕ rear disc brake			
2.4 D 4WD	08/88→07/05	701000 61 / 83	Sum		**2167901**	[+] 21679 15	Sumitomo ⊖ D Germany		**91041500**	ø 295 x 50
2.4 D 4WD	01/94→07/05	58 / 79								
2.4 i 4WD	06/89→07/05	84 / 114	Sum		**2167904**	[+] 21679 15	Sumitomo ⊕ D Germany		**94021000**	ø 295,0 x 67
2.4 i 4WD	06/89→07/05	84 / 114								
2.4 i 4WD	08/97→07/05	103 / 140			**92076300**	ø 289 x 20 x 64.5	⊕ rear disc brake			
2.4 TD 4WD	08/98→01/02	66 / 90								
2.5 D-4D 4WD	11/01→07/05	701100 75 / 102	Sum		**2167901**	[+] 21679 15	⊖ D Germany		**91041500**	ø 295 x 50
			Sum		**2167904**	[+] 21679 15	⊕ D Germany		**94021000**	ø 295,0 x 67
					92076300	ø 289 x 20 x 64.5	⊕ rear disc brake			
2.7	08/01→07/04	701200 107 / 145	Ake		**2115801**	[–] 21158 15.6			**91041500**	ø 295 x 50
					92076300	ø 289 x 20 x 64.5			**94021000**	ø 295,0 x 67
					92093300	ø 319 x 22 x 70.2				
2.7 4WD	11/97→04/05	701300 108 / 147	Sum		**2167901**	[+] 21679 15			**91041500**	ø 295 x 50
					92076300	ø 289 x 20 x 64.5			**94021000**	ø 295,0 x 67
					92093300	ø 319 x 22 x 70.2				
3.0 D	11/97→04/05	701400 65 / 88	Sum		**2085201**	[–] 20852 15.5			**91041500**	ø 295 x 50
					92076300	ø 289 x 20 x 64.5			**94021000**	ø 295,0 x 67
3.0 D (LN14_)	12/00→04/05	701500 71 / 97	Sum		**2085201**	[–] 20852 15.5				
3.0 D 4WD	12/00→04/05	71 / 97								
3.0 D 4WD (KZN205)	11/01→04/05	701600 87 / 118	Sum		**2167901**	[+] 21679 15			**91041500**	ø 295 x 50
					92076300	ø 289 x 20 x 64.5			**94021000**	ø 295,0 x 67

T - Z

		kW / hp										
HILUX II Pickup (RN6_, RN5_, LN6_, YN6_, YN5_, LN5_) 08/88→07/05												
701700			Sum		2402401	[+] 24024 17.8		Sum		2194701	[–] 21947 15	
3.4	08/01→07/05	131 / 178										
3.4 4WD	08/01→07/05	131 / 178			92076300	ø 289 x 20 x 64.5						
HILUX II Pick-up (RN6_, RN5_, LN6_, YN6_, YN5_, LN5_) 08/88→07/05 → HILUX II Pickup (RN6_, RN5_, LN6_, YN6_, YN5_, LN5_), Page 1128												
HILUX III Pickup (TGN1_, GGN2_, GGN1_, KUN2_, KUN1_) 02/05→												
701800					2524601	[–] 25246 15.6	2008-08→			94038600	ø 254 x 67.7	⊖ ZA
2.0	02/05→	98 / 133			2456701	[–] 24567 15.5	⊖ ZA					
			Adv		2452301	[+] 24523 16.4	⊕ ZA					
				PRO	92236003	ø 257 x 28 x 58.5						
701900					2524601	[–] 25246 15.6	08/08→ SWB			91066300	ø 295 x 62	⊕ KUN25 KUN35
2.5 D-4D	06/06→	75 / 102			2456701	[–] 24567 15.5	→07/08 SWB			94038600	ø 254 x 67.7	⊕ KUN15
			Sum		2168003	[+] 21680 17.5	SWB					
			Adv		2452301	[+] 24523 16.4	→10/08 LWB					
					92222600	ø 297 x 25 x 67.4	⊕ KUN25 KUN35					
				PRO	92236003	ø 257 x 28 x 58.5	⊕ KUN15					
702000					2524601	[–] 25246 15.6	08/08→ SWB			91066300	ø 295 x 62	⊕ KUN25 KUN35
2.5 D-4D	12/07→	88 / 120			2456701	[–] 24567 15.5	→07/08 SWB ⊕ KUN15			94038600	ø 254 x 67.7	⊕ KUN15
			Sum		2168003	[+] 21680 17.5	SWB					
			Adv		2452301	[+] 24523 16.4	→10/08 LWB					
					92222600	ø 297 x 25 x 67.4	⊕ KUN25 KUN35					
				PRO	92236003	ø 257 x 28 x 58.5	⊕ KUN15					
702100			Sum		2168001	[+] 21680 15	⊕ KUN25 KUN35			91066300	ø 295 x 62	⊕ KUN25 KUN35
2.5 D-4D	01/10→	106 / 144	Adv		2452301	[+] 24523 16.4	⊕ KUN15			94038600	ø 254 x 67.7	⊕ KUN15
					92222600	ø 297 x 25 x 67.4	⊕ KUN25 KUN35					
				PRO	92236003	ø 257 x 28 x 58.5	⊕ KUN15					
702200					2524601	[–] 25246 15.6	2008-08→			91066300	ø 295 x 62	⊕ KUN25 KUN35
2.5 D-4D 4WD	12/07→	88 / 120										
2.5 D 4WD	08/05→	75 / 102			2456701	[–] 24567 15.5	⊕ KUN15			94038600	ø 254 x 67.7	⊕ KUN15
			Sum		2168003	[+] 21680 17.5	SWB					
					92222600	ø 297 x 25 x 67.4	⊕ KUN25 KUN35					
				PRO	92236003	ø 257 x 28 x 58.5	⊕ KUN15					
702300					2524601	[–] 25246 15.6	2008-08→			91066300	ø 295 x 62	⊕ KUN25 KUN35
2.5 D-4D 4WD	12/07→	106 / 144			2456701	[–] 24567 15.5	⊕ KUN15			94038600	ø 254 x 67.7	⊕ KUN15
			Sum		2168003	[+] 21680 17.5	⊕ KUN25 KUN35					
			Adv		2520901	[+] 25209 16.8	⊖ EU					
					92222600	ø 297 x 25 x 67.4	⊕ KUN25 KUN35					
				PRO	92236003	ø 257 x 28 x 58.5	⊕ KUN15					
702400					2524601	[–] 25246 15.6	⊖ ZA 2008-08→			94038600	ø 254 x 67.7	⊖ ZA
2.7	08/05→	118 / 160										
2.7 4WD	08/05→	118 / 160			2456701	[–] 24567 15.5	⊖ ZA →2008-08					
			Adv		2452301	[+] 24523 16.4	⊕ ZA					
				PRO	92236003	ø 257 x 28 x 58.5						
702500					2524601	[–] 25246 15.6	2008-08→			94038600	ø 254 x 67.7	
3.0 (KUN16)	08/05→09/06	120 / 163										
3.0 D (KUN16)	10/06→	126 / 171										

		kW / hp											
HILUX III Pickup (TGN1_, GGN2_, GGN1_, KUN2_, KUN1_) 02/05→													
702500				2456701	[–] 24567 15.5	→2008-08							
3.0 (KUN16)	08/05→09/06	120 / 163											
3.0 D (KUN16)	10/06→	126 / 171	PRO	92236003	ø 257 x 28 x 58.5								
702600			Sum	2402401	[+] 24024 17.8		Sum	2194701	[–] 21947 15				
3.0 4WD (KUN26)	08/05→	120 / 163	Sum	82050000			Sum	82050200					
			PRO	92230403	ø 319 x 28 x 67.2		PRO	92170103	ø 312 x 18 x 68				
702700			Sum	2168001	[+] 21680 15	⊕ AUS ⊕ ZA ⊕ RP ⊕ TH		91066300	ø 295 x 62				
3.0 D-4D 4WD	12/07→	126 / 171	Sum	2168003	[+] 21680 17.5	SWB							
				92222600	ø 297 x 25 x 67.4								
702800				2524601	[–] 25246 15.6	⊕ GGN15 2008-08→		91066300	ø 295 x 62	⊕ GGN25			
4.0	08/05→	175 / 238		2456701	[–] 24567 15.5	⊕ GGN15 →2008-08		94038600	ø 254 x 67.7	⊕ GGN15			
			Sum	2168001	[+] 21680 15	⊕ GGN25							
				92222600	ø 297 x 25 x 67.4	⊕ GGN25							
			PRO	92236003	ø 257 x 28 x 58.5	⊕ GGN15							
702900				2524601	[–] 25246 15.6	⊕ GGN15 2008-08→		91066300	ø 295 x 62	⊕ GGN25			
4.0 4WD	08/05→	175 / 238		2524601	[–] 25246 15.6	08.2008→		94038600	ø 254 x 67.7	⊕ GGN15			
				2456701	[–] 24567 15.5	⊕ GGN15 →2008-08							
			Sum	2168001	[+] 21680 15	⊕ GGN25							
				92222600	ø 297 x 25 x 67.4	⊕ GGN25							
			PRO	92236003	ø 257 x 28 x 58.5	⊕ GGN15							
HILUX III Pick-up (TGN1_, GGN2_, GGN1_, KUN2_, KUN1_) 02/05→ → HILUX III Pickup (TGN1_, GGN2_, GGN1_, KUN2_, KUN1_), Page 1129													
HILUX III Platform/Chassis (KUN1_, TGN3_, TGN2_, TGN1_, KUN2 02/05→													
703000				2524601	[–] 25246 15.6	2008-08→		94038600	ø 254 x 67.7				
2.7	02/05→	118 / 160		2456701	[–] 24567 15.5								
			PRO	92236003	ø 257 x 28 x 58.5								
703100				2524601	[–] 25246 15.6	2008-08→		91066300	ø 295 x 62	⊕ KUN26			
3.0 D	02/05→	126 / 171											
3.0 D 4WD	02/05→	126 / 171		2456701	[–] 24567 15.5	⊕ KUN16		94038600	ø 254 x 67.7	⊕ KUN16			
			Sum	2168001	[+] 21680 15	⊕ KUN26							
				92222600	ø 297 x 25 x 67.4	⊕ KUN26							
			PRO	92236003	ø 257 x 28 x 58.5	⊕ KUN16							
703200				2524601	[–] 25246 15.6	2008-08→		91066300	ø 295 x 62	⊕ GGN25			
4.0	02/05→	175 / 238											
4.0 4WD	02/05→	175 / 238		2456701	[–] 24567 15.5	⊕ GGN15		94038600	ø 254 x 67.7	⊕ GGN15			
			Sum	2168001	[+] 21680 15	⊕ GGN25							
				92222600	ø 297 x 25 x 67.4	⊕ GGN25							
			PRO	92236003	ø 257 x 28 x 58.5	⊕ GGN15							
HILUX III Pritsche/Fahrgestell (KUN1_, TGN3_, TGN2_, TGN1_, 02/05→ → HILUX III Platform/Chassis (KUN1_, TGN3_, TGN2_, TGN1_, KUN2, Page 1130													
HILUX Closed Off-Road Vehicle (RZN1_, LN1_) 11/95→07/04													
703300			Sum	2402401	[+] 24024 17.8		Sum	2194701	[–] 21947 15	⊕ rear disc brake			
2.4 TD 4WD	08/97→07/01	66 / 90	PRO	92230403	ø 319 x 28 x 67.2			91041500	ø 295 x 50	⊕ rear drum brake			
							PRO	92170103	ø 312 x 18 x 68	⊕ rear disc brake			
								94021000	ø 295,0 x 67	⊕ rear drum brake			

T - Z

		kW / hp										
HILUX Closed Off-Road Vehicle (RZN1_, LN1_) 11/95→07/04												
		703300										
2.4 TD 4WD	08/97→07/01	66 / 90								91066100	ø 215 x 45	⊕ rear disc brake
		703400	Sum		2402401	[+] 24024 17.8		Sum		2194701	[–] 21947 15	
2.7	08/01→07/04	107 / 145										
3.0 D	08/02→07/04	67 / 91										
3.4 4WD	11/95→07/00	136 / 185		PRO	92230403	ø 319 x 28 x 67.2			PRO	92170103	ø 312 x 18 x 68	
3.4 4WD	08/00→07/04	131 / 178								91066100	ø 215 x 45	
HILUX Geländewagen geschlossen (RZN1_, LN1_) 11/95→07/04 → HILUX Closed Off-Road Vehicle (RZN1_, LN1_), Page 1130												
IPSUM (_CLM2_, _ACM2_) 08/01→11/09 → AVENSIS VERSO (_CLM2_, _ACM2_), Page 1111												
IPSUM (_XM10) 05/96→01/03 → PICNIC (_XM10), Page 1135												
IQ (KPJ1_, NGJ1_, KGJ1_, NUJ1_) 01/09→												
		703500	Adv		2477801	[+] 24778 16.6		Ake		2461001	[+] 24610 14.3	⊕ ABS
1.0	01/09→	50 / 68										
1.33	01/09→	69 / 94										
1.33	01/09→	72 / 98	Adv		82075300			Ake		82509700		⊕ ABS
1.4 D-4D	01/09→	66 / 90										
					92199900	ø 255 x 20 x 46.2				91053500	ø 200 x 32	⊖ ABS
										92156300	ø 259 x 9 x 30.3	⊕ ABS
		703600	Ake		2445103	[–] 24451 17.2				91076900	ø 228.6 x 37	
EV	09/12→											
			Ake		82074400					97034800		
					92156100	ø 255 x 22 x 46.3						
ISIS (ZNM1_, ANM1_, ZGM1_) 07/04→												
		703700	Ake		2392801	[–] 23928 17						
1.8 VVTi	07/04→	97 / 132										
1.8 VVTi	04/07→	106 / 144	Ake		82515100							
1.8 VVTi 4WD	04/07→	98 / 133										
				PRO	92077703	ø 275 x 28 x 49.2						
		703800	Ake		2392801	[–] 23928 17		Sum		2364601	[+] 23646 16	
2.0 VVTi	07/04→	114 / 155										
2.0 VVTi	04/07→	116 / 158										
2.0 VVTi 4WD	07/04→	114 / 155	Ake		82515100				PRO	92144203	ø 291 x 12 x 68.7	
				PRO	92077703	ø 275 x 28 x 49.2						
IST (NCP6_) 05/04→07/07												
		703900	Ake		2351002	[+] 23510 15.5				91053500	ø 200 x 32	
1.3 VVTi	05/04→07/07	63 / 86										
				PRO	92115603	ø 255 x 20 x 43.2				94029300	ø 200 x 43	
		704000	Ake		2351002	[+] 23510 15.5		Sum		2352101	[+] 23521 14	
1.5 VVTi	05/04→07/07	80 / 109										
				PRO	92115603	ø 255 x 20 x 43.2		Sum		82072500		
									PRO	92126203	ø 269 x 9 x 56	
IST (NSP1_, NLP1_, ZSP1_, NCP11_) 07/07→ → URBAN CRUISER (NSP1_, NLP1_, ZSP1_, NCP11_), Page 1141												
KIJANG INNOVA (_TGN4_, _KUN4_) 07/03→												
		704100	Adv		2452301	[+] 24523 16.4						
2.0	07/03→	100 / 136										
2.5 D-4D	08/04→	75 / 102										
2.7 VVTi	08/04→	118 / 160										
KLUGER (_MCU2_, _ACU2_) 06/00→05/07												
		704200	Sum		2370301	[+] 23703 18.5		Ake		2370201	[–] 23702 15.8	→08/03
2.4	06/00→05/07	115 / 156										
2.4	06/00→05/07	118 / 160						Sum		2396701	[–] 23967 15.2	08/03→
3.0	06/00→05/07	164 / 223										
3.0 4WD	06/00→05/07	164 / 223						Ake		82515200		
										92117000	ø 288 x 10 x 64.7	
		704300	Sum		2370301	[+] 23703 18.5		Ake		2370201	[–] 23702 15.8	
2.4 4WD	06/00→09/03	115 / 156										
2.4 4WD	06/00→09/03	118 / 160						Ake		82515200		
										92117000	ø 288 x 10 x 64.7	
		704400	Sum		2370301	[+] 23703 18.5		Sum		2396701	[–] 23967 15.2	
3.0 4WD	10/03→05/07	150 / 204										
3.3	10/03→05/07	171 / 233						Ake		82515200		
3.3 4WD	10/03→05/07	171 / 233										
3.3 Hybrid	03/05→05/07	200 / 272										

T - Z

		kW / hp										
KLUGER (_MCU2_, _ACU2_) 06/00→05/07												
3.3 Hybrid 4WD	03/05→05/07	200 / 272								92117000	ø 288 x 10 x 64.7	
KLUGER (_MHU4_, _GSU4_, _ASU4_) 05/07→												
		704500	Adv		2445201	[–] 24452 17.5		Ake		2548101	[–] 25481 15.2	
2.7 VVTi	05/07→	140 / 190										
2.7 VVTi 4WD	05/07→	140 / 190										
3.5	05/07→	201 / 273										
3.5 4WD	05/07→	201 / 273										
LAND CRUISER (KDJ12_, GRJ12_) 09/02→												
		704600	Sum		2402401	[+] 24024 17.8		Sum		2194701	[–] 21947 15	
2.7 (RZJ12)	09/02→08/04	112 / 152										
2.7 (TRJ12)	11/03→02/10	120 / 163										
3.0 D	09/02→07/09	70 / 95	Sum		82050000			Sum		82050200		
3.0 D-4D (KDJ120, KDJ125)	09/02→	127 / 173										
3.0 D-4D (KDJ120, KDJ125)	08/04→02/10	122 / 166			92137300	ø 338 x 28 x 67.3			PRO	92170103	ø 312 x 18 x 68	
3.0 D-4D (KDJ120, KDJ150, KDJ125)	01/03→02/10	120 / 163										
3.0 D-4D (KZJ12)	09/02→02/10	92 / 125								91066100	ø 215 x 45	
3.4	09/02→08/04	136 / 185										
4.0	09/02→08/04	179 / 243										
4.0 (GRJ12, GRJ125)	01/03→	183 / 249										
4.5 D	02/05→02/10	151 / 205										
LAND CRUISER (PZJ7_, KZJ7_, HZJ7_, BJ7_, LJ7_, RJ7_) 01/90→02/07												
		704700	Sum		2167901	[+] 21679 15	⊖ D					
4.2 TD (HZJ7__V)	01/90→	96 / 131	Sum		2167904	[+] 21679 15	⊕ D					
			Sum		82050000							
					92080400	ø 302 x 20 x 48						
		704800	Sum		2352402	[+] 23524 17.7		Sum		2194701	[–] 21947 15	
4.2 TD 24V 4x4 (HDJ78)	11/01→02/07	122 / 166		PRO	92263103	ø 321.5 x 32 x 64.6		Sum		82050200		
		704900	Sum		2167901	[+] 21679 15						
4.5 EFi 4x4 (FZJ75)	11/92→11/99	158 / 215	Sum		82050000		→04/93					
			Tok		82503200		05/93→					
					92080400	ø 302 x 20 x 48						
		705000	Sum		2167901	[+] 21679 15						
4.5 MPFi 4x4 (FZJ78)	01/98→04/06	165 / 224	Tok		82503200							
					92080400	ø 302 x 20 x 48						
		705100	Sum		2352402	[+] 23524 17.7		Sum		2194701	[–] 21947 15	
4.5 TD 24V 4x4 (VDJ76, VDJ78)	03/07→	151 / 205			92137300	ø 338 x 28 x 67.3		Sum		82050200		
LAND CRUISER (VDJ20_, UZJ20_) 08/07→												
		705200	Adv		2438601	[+] 24386 17.9		Adv		2465301	[–] 24653 17.4	
4.0 VVTi	01/10→	176 / 239										
4.5 D4-D	08/07→	173 / 235		PRO	92204603	ø 340 x 32 x 84.5			PRO	92198503	ø 345 x 18 x 76.5	
4.5 D4-D	01/12→	200 / 272										
4.5 D-4D (VDJ200)	01/08→	195 / 265										
4.5 D V8 (VDJ200)	01/08→	210 / 286										
4.6 V8	09/10→	227 / 309										
4.6 V8 (_URJ202W_)	01/12→	234 / 318										
4.7 V8 (UZJ200)	08/07→	202 / 275										
4.7 V8 (UZJ200)	01/08→	212 / 288										
5.7 V8	08/07→	284 / 386										
LAND CRUISER 100 (UZJ100) 01/98→												
		705300	Sum		2352402	[+] 23524 17.7		Sum		2353902	[–] 23539 17.5	
4.2 D (HZJ105)	03/98→10/07	96 / 131										
4.2 TD (HDJ100_)	01/98→	150 / 204	Sum		82511500			Sum		82510200		
4.5 i (FZJ105)	03/98→	165 / 224										
4.7 (UZJ100_)	01/98→	173 / 235										
4.7 (UZJ100)	02/02→	175 / 238			92108100	ø 313 x 32 x 70			PRO	92172803	ø 329 x 18 x 102.5	
				PRO	92108103	ø 313 x 32 x 70				91066200	ø 230 x 45	
LAND CRUISER 150 (KDJ15_, GRJ15_) 01/10→												
		705400	Sum		2402403	[+] 24024 17		Sum		2194701	[–] 21947 15	
2.7	01/10→	120 / 163										
4.0 V6 Dual VVTi	01/10→	205 / 279	Sum		82050000			Sum		82050200		
4.0 V6 VVTi	01/10→	183 / 249										
4.0 V6 VVTi	01/10→	203 / 276										
4.0 V6 VVT-i	01/10→	207 / 282		PRO	92223903	ø 338 x 32 x 68.4				91066100	ø 215 x 45	
		705500	Sum		2402403	[+] 24024 17		Sum		2194701	[–] 21947 15	
3.0 D-4D	01/10→	140 / 190										
3.0 D-4D	03/10→	127 / 173										

T - Z

		kW / hp										
LAND CRUISER 150 (KDJ15_, GRJ15_) 01/10→												
3.0 TDi	01/10→	120 / 163	Sum		82050000			Sum		82050200		
				PRO	92223903	ø 338 x 32 x 68.4				91066100	ø 215 x 45	
										97034700		
LAND CRUISER 90 (_J9_) 04/95→07/02												
		705600	Sum		2167901	[+] 21679 15		Sum		82050200		
2.7	04/95→07/02	110 / 150	Sum		82050000				PRO	92170103	ø 312 x 18 x 68	
					92093300	ø 319 x 22 x 70.2				91066100	ø 215 x 45	
		705700	Sum		2167901	[+] 21679 15	⊖ D	Sum		2194701	[–] 21947 15	
3.0 D-4D (KDJ90, KDJ95, KDJ 125)	10/00→	120 / 163	Sum		2167904	[+] 21679 15	⊕ D	Sum		82050200		
			Sum		82050000				PRO	92170103	ø 312 x 18 x 68	
					92093300	ø 319 x 22 x 70.2				91066100	ø 215 x 45	
		705800	Sum		2167901	[+] 21679 15		Sum		2194701	[–] 21947 15	
3.0 D-4D (KDJ90, KDJ95)	02/00→	125 / 170	Sum		82050000			Sum		82050200		
					92093300	ø 319 x 22 x 70.2			PRO	92170103	ø 312 x 18 x 68	
										91066100	ø 215 x 45	
		705900	Sum		2167901	[+] 21679 15	Germany	Sum		2194701	[–] 21947 15	
3.0 TD	04/95→07/00	103 / 140	Sum		82050000			Sum		82050200		
					92093300	ø 319 x 22 x 70.2			PRO	92170103	ø 312 x 18 x 68	
										91066100	ø 215 x 45	
		706000	Sum		2167901	[+] 21679 15	⊖ D Germany	Sum		2194701	[–] 21947 15	
3.0 TD (KZJ90_, KZJ95_)	04/96→	92 / 125										
3.4 i 24V (VZJ90_, VZJ95_)	04/96→	131 / 178	Sum		2167904	[+] 21679 15	⊕ D Germany	Sum		82050200		
			Sum		82050000				PRO	92170103	ø 312 x 18 x 68	
					92093300	ø 319 x 22 x 70.2				91066100	ø 215 x 45	
		706100	Sum		2352402	[+] 23524 17.7		Sum		2353902	[–] 23539 17.5	
4.7	08/02→	175 / 238	Sum		82511500			Sum		82510200		
					92108100	ø 313 x 32 x 70			PRO	92172803	ø 329 x 18 x 102.5	
				PRO	92108103	ø 313 x 32 x 70				91066200	ø 230 x 45	
LAND CRUISER AMAZON (UZJ100) 01/98→ → LAND CRUISER 100 (UZJ100), Page 1132												
LAND CRUISER - BUNDERA (PZJ7_, KZJ7_, HZJ7_, BJ7_, LJ7_, RJ7 01/90→02/07 → LAND CRUISER (PZJ7_, KZJ7_, HZJ7_, BJ7_, LJ7_, RJ7_), Page 1132												
LAND CRUISER Pickup (_J7_) 01/90→11/99												
		706200	Sum		2352402	[+] 23524 17.7		Sum		2194701	[–] 21947 15	
4.2 TD 24V 4x4	11/01→02/07	122 / 166										
4.2 TD 4x4	03/07→	100 / 136										
4.5 MPFi 4x4	03/07→	179 / 243		PRO	92263103	ø 321.5 x 32 x 64.6		Sum		82050200		
4.5 TD 24V 4x4 (VDJ79)	03/07→	151 / 205										
		706300	Sum		2167901	[+] 21679 15						
4.2 TD 4x4 (HZJ7__V)	01/90→	96 / 131										
4.5 EFi 4x4 (FZJ75)	11/92→11/99	158 / 215	Sum		82050000							
					92080400	ø 302 x 20 x 48						
		706400	Sum		2167901	[+] 21679 15						
4.5 MPFi 4x4 (FZJ79)	11/92→11/99	165 / 224	Sum		82050000		→04/93					
			Tok		82503200		05/93→					
					92080400	ø 302 x 20 x 48						
LAND CRUISER Pick-up (_J7_) 01/90→11/99 → LAND CRUISER Pickup (_J7_), Page 1133												
LAND CRUISER PRADO (_J9_) 04/95→07/02 → LAND CRUISER 90 (_J9_), Page 1133												

		kW / hp											
LAND CRUISER PRADO (KDJ12_, GRJ12_) 09/02→ → LAND CRUISER (KDJ12_, GRJ12_), Page 1132													
LAND CRUISER PRADO (KDJ15_, GRJ15_) 01/10→ → LAND CRUISER 150 (KDJ15_, GRJ15_), Page 1132													
MARK X I (GRX12_) 03/04→09/09													
		706500	Ake		2386401	[–] 23864 17				2490201	[+] 24902 15.5	
2.5 VVTi	03/04→09/09	158 / 215											
2.5 VVTi 4WD	05/04→09/09	158 / 215											
3.0 VVTi	03/04→09/09	162 / 220		PRO	92174303	ø 296 x 28 x 49.5			PRO	92179803	ø 291 x 10 x 61	
3.0 VVTi	05/04→09/09	183 / 249											
MARK X II (GRX13_) 10/09→													
		706600	Ake		2386401	[–] 23864 17				2490201	[+] 24902 15.5	
2.5	10/09→	149 / 203											
2.5 4WD	10/09→	149 / 203		PRO	92174303	ø 296 x 28 x 49.5			PRO	92179803	ø 291 x 10 x 61	
		706700	Adv		2032501	[+] 20325 17.5				2432301	[+] 24323 15.5	
3.5	10/09→	234 / 318								92148000	ø 310 x 18 x 67.3	
MARK X ZiO (GGA1_, ANA1_) 09/07→													
		706800	Adv		2433701	[–] 24337 17.6			Ake	2433801	[–] 24338 15.4	
2.4	09/07→	120 / 163											
2.4 4WD	09/07→	120 / 163	Ake		82074400				Ake	82509900		
3.5	09/07→	206 / 280		PRO	92168803	ø 296 x 28 x 49.3				92162100	ø 281 x 12 x 55	
									PRO	92162103	ø 281 x 12 x 55	
MATRIX (ZRE14_, AZE14_) 01/08→													
		706900	Ake		2433601	[–] 24336 17.5			Ake	2433801	[–] 24338 15.4	
1.8	01/08→	97 / 132											
2.4	01/08→	117 / 159	Ake		82074400							
MATRIX (ZZE13_) 09/01→02/04													
		707000	Ake		2386401	[–] 23864 17			Sum	2352101	[+] 23521 14	
1.8 VVTi	09/01→02/04	96 / 131											
1.8 VVTi 4WD	09/01→02/04	91 / 124		PRO	92180303	ø 275 x 25 x 49.3			Sum	82072500		
									PRO	92126203	ø 269 x 9 x 56	
										91063200	ø 170 x 32	
										97031900		
MEGA CRUISER (BXD2_) 10/96→09/99													
		707100	Sum		2178403	[–] 21784 15						
4.1 TD 4WD	10/96→09/99	110 / 150											
MR III (ZZW3_) 10/99→06/07 → MR 2 III (ZZW3_), Page 1134													
MR 2 II (SW2_) 12/89→05/00													
		707200	Ake		2196102	[–] 21961 15.5			Ake	2175901	[+] 21759 15.3	
2.0 16V	12/89→05/00	125 / 170											
			Ake		82061000					82053000		
					92114400	ø 258 x 25 x 47				92114500	ø 263 x 16 x 46.2	→12/91
										92149600	ø 281 x 22 x 46.2	12/91→
		707300	Ake		2196102	[–] 21961 15.5	12/91→		Ake	2175901	[+] 21759 15.3	
2.0 16V	12/89→05/00	129 / 175											
2.0 16V (SW20)	12/89→05/00	115 / 156	Ake		82061000					82053000		
					92114400	ø 258 x 25 x 47				92114500	ø 263 x 16 x 46.2	→12/91
										92149600	ø 281 x 22 x 46.2	12/91→
		707400	Ake		2196102	[–] 21961 15.5						
2.0 Turbo	12/89→09/99	167 / 227										
MR 2 III (ZZW3_) 10/99→06/07													
		707500	Ake		2390401	[+] 23904 16.6			Ake	2175901	[+] 21759 15.3	
1.8 16V VT-i (ZZW30)	10/99→06/07	103 / 140											
			Adv		82075300					82053000		
				PRO	92115603	ø 255 x 20 x 43.2				92149700	ø 263 x 16 x 41.1	
NADIA 04/98→08/03													
		707600	Ake		2351302	[+] 23513 17				91051000	ø 228.6 x 41.5	
2.0	04/98→08/03	100 / 136											
2.0 4WD	04/98→08/03	107 / 145											
2.2 TD 4WD	04/98→08/03	66 / 90											

T - Z

		kW / hp										
NADIA 04/98→08/03												
		707600		PRO	92077703	ø 275 x 28 x 49.2				94029400	ø 228,6 x 50	
2.0	04/98→08/03	100 / 136										
2.0 4WD	04/98→08/03	107 / 145										
2.2 TD 4WD	04/98→08/03	66 / 90										
NOAH/VOXY (_AZR6_) 12/01→06/07												
		707700	Ake		2383601	[+] 23836 16.7						
2.0	12/01→06/07	112 / 152										
2.0 4WD	12/01→06/07	112 / 152	Ake		82509800							
NOAH/VOXY (_ZRR7_) 06/07→09/13												
		707800	Ake		2433601	[–] 24336 17.5		Sum		2364601	[+] 23646 16	
2.0	06/07→09/13	116 / 158										
2.0 4WD	06/07→09/13	114 / 155	Ake		82074400							
				PRO	92232703	ø 275 x 25 x 46.5						
OPA (ZCT1_, ACT1_) 04/00→04/05												
		707900	Ake		2390401	[+] 23904 16.6		Ake		2359201	[–] 23592 15	⊕ rear disc brake
1.8	04/00→08/03	100 / 136										
1.8 4WD	04/00→08/03	92 / 125								91053500	ø 200 x 32	⊕ rear drum brake
2.0	08/00→04/05	112 / 152										
										91063200	ø 170 x 32	⊕ rear disc brake
PASEO Cabriolet (EL54) 10/96→04/00 → PASEO Convertible (EL54), Page 1135												
PASEO Convertible (EL54) 10/96→04/00												
		708000	Ake		2087001	[o] 20870 15		Ake		2349101	[–] 23491 12.5	⊕ rear disc brake
1.5	10/96→03/99	66 / 90										
1.5	10/97→04/00	81 / 110	Ake		82026600					91046900	ø 180 x 28	⊕ rear drum brake
					92114600	ø 254 x 18 x 42.8				94017800	ø 180,0 x 34.5	⊕ rear drum brake ⊕ ABS
PASEO Coupe (EL54) 08/95→04/00												
		708100	Ake		2087001	[o] 20870 15		Ake		2349101	[–] 23491 12.5	⊕ rear disc brake
1.3	08/95→04/00	65 / 88										
1.5	08/95→07/99	85 / 116	Ake		82026600					91046900	ø 180 x 28	⊕ rear drum brake
1.5	08/95→04/00	81 / 110										
1.5 16V	08/95→07/99	66 / 90			92114600	ø 254 x 18 x 42.8				94017800	ø 180,0 x 34.5	⊕ rear drum brake ⊕ ABS
PASSO (_NC1_, _XC1_) 06/05→01/10												
		708200	Sum		2350701	[+] 23507 15						
1.0	06/05→01/10	51 / 69										
1.0 4WD	06/05→01/10	51 / 69										
		708300	Sum		2350701	[+] 23507 15				91065600	ø 180 x 31	
1.3	06/05→12/07	77 / 105										
		708400	Sum		2526201	[+] 25262 15.4						
1.3	01/08→01/10	70 / 95										
PASSO (_NGC3_, _KGC3_) 02/10→												
		708500	Sum		2526201	[+] 25262 15.4						
1.0	02/10→	51 / 69										
1.0 4WD	02/10→	51 / 69										
1.3	02/10→	70 / 95										
PASSO SETTE (M5_E) 12/08→												
		708600	Ake		2445103	[–] 24451 17.2						
1.5	12/08→	80 / 109										
1.5 4WD	12/08→	80 / 109			92156100	ø 255 x 22 x 46.3						
PICNIC (_CLM2_, _ACM2_) 08/01→11/09 → AVENSIS VERSO (_CLM2_, _ACM2_), Page 1111												
PICNIC (_XM10) 05/96→01/03												
		708700	Sum		2160101	[+] 21601 17.6				91051000	ø 228.6 x 41.5	
2.0	06/00→01/03	100 / 136										
2.0	01/01→12/01	90 / 122	Ake		82033400			Sum		97028900		
2.0 16V (SXM10_)	05/96→12/01	94 / 128										
2.2 D (CMX10_)	08/97→12/01	66 / 90			92077600	ø 255 x 28 x 49.2				94029400	ø 228,6 x 50	
PLATZ (NCP1_) 04/99→08/05												
		708800	Ake		2334803	[+] 23348 16.5						
1.0 VVTi	04/99→08/05	50 / 68										
1.5 VVTi	04/99→08/05	78 / 106										
1.5 VVTi 4WD	09/02→08/05	78 / 106	Luc		82054900							
		708900	Ake		2334803	[+] 23348 16.5				91053500	ø 200 x 32	
1.3 VVTi	09/02→08/05	63 / 86										
1.3 VVTi 4WD	09/02→08/05	63 / 86										
			Luc		82054900							
PORTE (_NNP1_) 07/04→07/12												
		709000	Ake		2531601	[+] 25316 16.5				91053500	ø 200 x 32	
1.3 VVTi	07/04→07/12	64 / 86										
1.5 4WD	07/04→07/12	77 / 105										

T - Z

		kW / hp											
PORTE (_NNP1_) 07/04→07/12													
1.5 VVTi	07/04→07/12	81 / 110									94029300	ø 200 x 43	
PRADO (UZJ100) 01/98→ → LAND CRUISER 100 (UZJ100), Page 1132													
PREMIO (NZT26_, ZRT26_) 07/07→													
		709100	Ake		2433601	[–] 24336 17.5							
1.5	07/07→	81 / 110	Ake		2434701	[–] 24347 18.6							
					92199300	ø 275 x 22 x 46.5							
		709200	Ake		2433601	[–] 24336 17.5							
1.8	07/07→	106 / 144											
1.8 4WD	07/07→	98 / 133	Ake		82074400								
2.0	07/07→	116 / 158											
2.0 4WD	07/07→	116 / 158			92199300	ø 275 x 22 x 46.5							
PREVIA (MCR3_, ACR3_, CLR3_) 02/00→01/06													
		709300	Ake		2375901	[–] 23759 17	04/03→ ⊕ EU	Sum		2364601	[+] 23646 16	⊕ rear disc brake	
2.0	10/00→08/03	94 / 128											
2.4	08/00→01/06	115 / 156	Ake		2452201	[–] 24522 16.9	→04/03	Sum		82508300		⊕ rear disc brake	
			Ake		2351302	[+] 23513 17	→04/03			91051100	ø 254 x 51	⊕ rear drum brake	
					92135800	ø 296 x 28 x 49.2			PRO	92144203	ø 291 x 12 x 68.7	⊕ rear disc brake	
				PRO	92077703	ø 275 x 28 x 49.2	→03/03			91060500	ø 190 x 45		
										97034700			
		709400	Ake		2375901	[–] 23759 17	04/03→ ⊕ EU	Sum		2364601	[+] 23646 16	⊕ rear disc brake	
2.0 D-4D	03/01→01/06	85 / 116	Ake		2452201	[–] 24522 16.9	01/02→ →04/03	Sum		82508300		⊕ rear disc brake	
			Ake		2351302	[+] 23513 17	→04/03			91051100	ø 254 x 51	⊕ rear drum brake	
					92135800	ø 296 x 28 x 49.2			PRO	92144203	ø 291 x 12 x 68.7	⊕ rear disc brake	
				PRO	92077703	ø 275 x 28 x 49.2	→03/03			91060500	ø 190 x 45		
										97034700			
		709500	Ake		2375901	[–] 23759 17		Sum		2364601	[+] 23646 16		
2.4 4WD	07/02→12/05	96 / 131			82516100			Sum		82508300			
					92135800	ø 296 x 28 x 49.2			PRO	92144203	ø 291 x 12 x 68.7		
		709600	Ake		2385501	[–] 23855 16	03/04→		PRO	92144203	ø 291 x 12 x 68.7		
3.0 VVTi	08/00→12/05	162 / 220	Ake		2351302	[+] 23513 17	→03/04						
3.0 VVTi 4WD	02/00→12/05	162 / 220		PRO	92077703	ø 275 x 28 x 49.2							
		709700	Ake		2460101	[o] 24601 18		Bos		2362002	[+] 23620 16.6		
3.5	02/00→01/06	206 / 280											
3.5 4WD	02/00→01/06	206 / 280											
PREVIA (TCR2_, TCR1_) 05/90→08/00													
		709800	Ake		2183601	[+] 21836 15.5	→08/96	Ake		2168801	[–] 21688 15.3	⊕ rear disc brake	
2.4	05/90→08/00	97 / 132	Ake		2300901	[+] 23009 15.5	→08/96 optional			91041600	ø 254 x 52	⊕ rear drum brake	
			Ake		2303201	[+] 23032 15.5	08/96→			97029000			
			Ake		82052900		08/96→			92082600	ø 291 x 18 x 68.3	⊕ rear disc brake	
					92080800	ø 255 x 25 x 52.7	⊖ ABS			91060500	ø 190 x 45	04/93→	
					92080900	ø 279 x 22 x 52.6	⊕ GL ⊖ ABS			97034700		04/93→	
					92081000	ø 271 x 25 x 52.7	⊕ ABS						
		709900	Ake		2183601	[+] 21836 15.5	→08/96	Ake		2168801	[–] 21688 15.3	⊕ rear disc brake	
2.4 4WD	05/90→12/99	110 / 150	Ake		2300901	[+] 23009 15.5	→08/96 optional			91041600	ø 254 x 52	⊕ rear drum brake	
			Ake		2303201	[+] 23032 15.5	08/96→			97029000			
			Ake		82052900					92082600	ø 291 x 18 x 68.3	⊕ rear disc brake	

T - Z

		kW / hp											
PREVIA (TCR2_, TCR1_) 05/90→08/00													
		709900			92080800	ø 255 x 25 x 52.7	⊖ ABS			91060500	ø 190 x 45	04/93→
2.4 4WD	05/90→12/99	110 / 150			92080900	ø 279 x 22 x 52.6	⊕ GL ⊖ ABS			97034700		04/93→
					92081000	ø 271 x 25 x 52.7	⊕ ABS					
		710000	Ake		2183601	[+] 21836 15.5	→08/96	Ake		2168801	[–] 21688 15.3	⊕ rear disc brake
2.4 4WD	05/90→08/00	97 / 132	Ake		2300901	[+] 23009 15.5	→08/96 optional			91041600	ø 254 x 52	⊕ rear drum brake
			Ake		2303201	[+] 23032 15.5	08/96→			97029000		
			Ake		82052900		→08/96			92082600	ø 291 x 18 x 68.3	⊕ rear disc brake
					92080800	ø 255 x 25 x 52.7	⊖ ABS			91060500	ø 190 x 45	04/93→
					92080900	ø 279 x 22 x 52.6	⊕ GL ⊖ ABS			97034700		04/93→
					92081000	ø 271 x 25 x 52.7	⊕ ABS					
PREVIA III (ACR5_, GSR5_) 10/05→												
		710100	Ake		2460101	[o] 24601 18		Bos		2362002	[+] 23620 16.6	
2.4	10/05→	125 / 170								91080600	ø 189.8 x 45	
3.5	01/06→	200 / 272										
3.5	01/06→	206 / 280										
3.5 4WD	01/06→	206 / 280										
PRIUS (ZVW3_) 04/09→												
		710200	Ake		2445101	[–] 24451 15.6		Ake		2501601	[+] 25016 14.3	
1.8 Hybrid	04/09→	73 / 99		PRO	92225003	ø 255 x 25 x 49.3			PRO	92224003	ø 259 x 9 x 30.4	
PRIUS V (ZVW4_) 03/12→ → PRIUS PLUS (ZVW4_), Page 1137												
PRIUS ALPHA (ZVW4_) 03/12→ → PRIUS PLUS (ZVW4_), Page 1137												
PRIUS C (NHP10_) 02/12→												
		710300	Ake		2445101	[–] 24451 15.6				97034800		
1.5 Hybrid	02/12→	54 / 73	Ake		82074400							
					92156100	ø 255 x 22 x 46.3						
PRIUS Hatchback (NHW20_) 08/03→03/09												
		710400	Ake		2351002	[+] 23510 15.5	→11/05	Ake		2359201	[–] 23592 15	08/04→
1.5	08/03→03/09	57 / 78	Ake		2390401	[+] 23904 16.6	12/05→	Sum		2352101	[+] 23521 14	→07/04
				PRO	92179503	ø 255 x 22 x 49.2		Sum		82072500		
									PRO	92170403	ø 269 x 9 x 56	
										91063200	ø 170 x 32	
										97031900		
PRIUS PLUS (ZVW4_) 03/12→												
		710500	Ake		2445101	[–] 24451 15.6		Ake		2501601	[+] 25016 14.3	
1.8 Hybrid	03/12→	73 / 99	Ake		82074400				PRO	92224003	ø 259 x 9 x 30.4	
				PRO	92225003	ø 255 x 25 x 49.3						
PRIUS Saloon (NHW11_) 05/00→01/04												
		710600	Ake		2351002	[+] 23510 15.5		Sum		2352101	[+] 23521 14	
1.5	05/00→01/04	53 / 72						Sum		82072500		
									PRO	92126203	ø 269 x 9 x 56	
										91063200	ø 170 x 32	
										97031900		
PRIUS Schrägheck (NHW20_) 08/03→03/09 → PRIUS Hatchback (NHW20_), Page 1137												
PRIUS Stufenheck (NHW11_) 05/00→01/04 → PRIUS Saloon (NHW11_), Page 1137												
PROACE Box Body / Estate 06/13→												
		710700	Luc		2459501	[+] 24595 18.3		Luc		2457801	[–] 24578 16.6	
1.6 D-4D	06/13→	66 / 90										
2.0 D-4D	06/13→	94 / 128										

		kW / hp										
PROACE Box Body / Estate 06/13→												
2.0 D-4D	06/13→	120 / 163	Luc		82073300			Luc		82073900		
					92157000	ø 304 x 28 x 48				92157100	ø 290 x 14 x 49	
PROACE Kasten/Kombi 06/13→ → PROACE Box Body / Estate, Page 1137												
PROBOX/SUCCEED (_NLP5_, _NCP5_) 07/02→												
710800			Ake		2334901	[+] 23349 16.5						
1.3 VVTi	07/02→	64 / 87										
1.4 D-4D	07/02→	55 / 75										
1.5 VVTi	07/02→	68 / 92										
1.5 VVTi	07/02→	80 / 109										
1.5 VVTi 4WD	07/02→	77 / 105										
1.5 VVTi 4WD	07/02→	80 / 109										
1.5 VVTi Hybrid	07/02→	68 / 92										
QUALIS (_TGN4_, _KUN4_) 07/03→ → KIJANG INNOVA (_TGN4_, _KUN4_), Page 1131												
QUANTUM III Wagon (LH1_, RZH1_) 08/89→08/04 → HIACE III Wagon (LH1_, RZH1_), Page 1127												
QUANTUM IV (TRH2_, KDH2_) 01/05→ → HIACE / COMMUTER IV (TRH2_, KDH2_), Page 1126												
QUANTUM IV Kasten (TRH2_, KDH2_) 01/05→ → HIACE IV Box (TRH2_, KDH2_), Page 1127												
RACTIS (NLP12_, NCP12_, NSP12_) 11/10→ → VERSO S (NLP12_, NCP12_, NSP12_), Page 1142												
RACTIS (SCP10_, NCP10_) 09/05→08/10												
710900			Adv		2470801	[–] 24708 17.6		Ake		2461001	[+] 24610 14.3	
1.5 VVTi	09/05→08/10	80 / 109										
1.5 VVTi 4WD	09/05→08/10	76 / 103	Ake		82074400			Ake		82509700		
					92156200	ø 275 x 22 x 46.3				92156300	ø 259 x 9 x 30.3	
RAV 4 (SXA1_) 01/94→06/00 → RAV 4 I (SXA1_), Page 1138												
RAV 4 (SXA1_) 01/94→06/00 → RAV 4 I (SXA1_), Page 1138												
RAV 4 (SXA1_) 12/97→06/00 → RAV 4 I Cabrio (SXA1_), Page 1138												
RAV 4 (SXA1_) 12/97→06/00 → RAV 4 I Cabrio (SXA1_), Page 1138												
RAV 4 I (SXA1_) 01/94→06/00												
711000			Sum		2160101	[+] 21601 17.6				91048200	ø 228.6 x 42	
2.0	06/97→09/99	99 / 135										
2.0 4WD	01/94→09/99	99 / 135										
2.0 4WD	01/94→09/99	121 / 165			92093500	ø 302 x 18 x 46.2		Sum		97028900		
2.0 4WD	06/94→06/00	95 / 129								94022200	ø 228,6 x 55	
RAV 4 I Cabrio (SXA1_) 12/97→06/00												
711100			Sum		2160101	[+] 21601 17.6				91048200	ø 228.6 x 42	
2.0 16V 4WD	12/97→06/00	94 / 129										
					92093500	ø 302 x 18 x 46.2		Sum		97028900		
										94022200	ø 228,6 x 55	
RAV 4 II (CLA2_, XA2_, ZCA2_, ACA2_) 06/00→11/05												
711200			Ake		2358501	[–] 23585 17		Ake		2365601	[+] 23656 14	⊕ rear disc brake
1.8 VVTi	08/00→11/05	92 / 125										
2.0 D-4D 4WD	09/01→11/05	85 / 116	Ake		82509500					91063100	ø 228.6 x 41.5	⊕ rear drum brake
2.0 VVTi 4WD	06/00→11/05	110 / 150										
2.4 VVTi 4WD	08/03→11/05	112 / 152			92139700	ø 275 x 25 x 49		Sum		97028900		
2.4 VVTi 4WD	08/03→11/05	120 / 163		PRO	92139703	ø 275 x 25 x 49				97033300		⊕ rear drum brake
										92144100	ø 303 x 9 x 62.2	⊕ rear disc brake
									PRO	92144103	ø 303 x 9 x 62.2	⊕ rear disc brake
										94022200	ø 228,6 x 55	⊕ rear drum brake
										91060500	ø 190 x 45	
										97034700		
RAV 4 III (ACA3_, ACE_, ALA3_, GSA3_, ZSA3_) 11/05→												
711300			Ake		2433601	[–] 24336 17.5	⊕ UAE ⊕ AUS	Ake		2433801	[–] 24338 15.4	
2.0	12/08→	116 / 158										
2.0 4WD	12/08→	116 / 158	Adv		2433701	[–] 24337 17.6	⊖ UAE ⊖ AUS	Ake		82509900		
2.0 VVT-i 4WD	03/06→	112 / 152										
2.2 D-4D	12/08→	110 / 150	Ake		82074400		⊕ UAE ⊕ AUS			92162100	ø 281 x 12 x 55	
2.2 D-4D 4WD	03/06→	100 / 136										
2.2 D-4D 4WD	12/08→	110 / 150		PRO	92168803	ø 296 x 28 x 49.3			PRO	92162103	ø 281 x 12 x 55	
2.2 D-CAT 4WD	03/06→	130 / 177								91068200	ø 172 x 32	

T - Z

		kW / hp											
RAV 4 III (ACA3_, ACE_, ALA3_, GSA3_, ZSA3_) 11/05→													
711400			Adv		2433701	[–] 24337 17.6		Ake		2433801	[–] 24338 15.4	
2.0 VVT-i	03/09→	109 / 148		PRO	92168803	ø 296 x 28 x 49.3		Ake		82509900		
2.0 VVT-i 4WD	03/09→	109 / 148								92162100	ø 281 x 12 x 55	
									PRO	92162103	ø 281 x 12 x 55	
										91068200	ø 172 x 32	
711500			Ake		2433601	[–] 24336 17.5	15" -brake	Ake		2433801	[–] 24338 15.4	
2.4 VVTi	11/05→	125 / 170	Adv		2433701	[–] 24337 17.6	16" -brake	Ake		82509900		
			Ake		82074400		15" -brake			92162100	ø 281 x 12 x 55	
				PRO	92168803	ø 296 x 28 x 49.3	15" -brake		PRO	92162103	ø 281 x 12 x 55	
				PRO	92232703	ø 275 x 25 x 46.5	16" -brake			91068200	ø 172 x 32	
711600			Adv		2433701	[–] 24337 17.6		Ake		2433801	[–] 24338 15.4	
2.4 VVTi 4WD	11/05→	125 / 170		PRO	92232703	ø 275 x 25 x 46.5		Ake		82509900		
										92162100	ø 281 x 12 x 55	
									PRO	92162103	ø 281 x 12 x 55	
										91068200	ø 172 x 32	
711700			Adv		2445201	[–] 24452 17.5	17" -brake	Ake		2433801	[–] 24338 15.4	
2.5	11/08→	132 / 180	Adv		2433701	[–] 24337 17.6	16" -brake	Ake		82509900		
2.5 4WD	11/08→	132 / 180	Ake		82074400					92162100	ø 281 x 12 x 55	
				PRO	92168803	ø 296 x 28 x 49.3			PRO	92162103	ø 281 x 12 x 55	
										91068200	ø 172 x 32	
711800			Ake		2433601	[–] 24336 17.5		Ake		2433801	[–] 24338 15.4	
3.5 4WD	08/07→	206 / 280	Ake		82074400			Ake		82509900		
3.5 VVTi 4WD	11/05→	198 / 269		PRO	92232703	ø 275 x 25 x 46.5				92162100	ø 281 x 12 x 55	
3.5 VVTi 4WD	11/05→	201 / 273							PRO	92162103	ø 281 x 12 x 55	
										91068200	ø 172 x 32	
RAV 4 IV (ZSA4_, ALA4_) 12/12→													
711900			Adv		2433701	[–] 24337 17.6		Ake		2433801	[–] 24338 15.4	
2.0 D4-D	12/12→	91 / 124	Ake		82074400			Ake		82509900		
2.0 VVT-i	12/12→	107 / 146								92162100	ø 281 x 12 x 55	
2.2 D4-D 4WD	12/12→	110 / 150							PRO	92162103	ø 281 x 12 x 55	
712000			Adv		2445201	[–] 24452 17.5	17" -brake	Ake		2433801	[–] 24338 15.4	
2.0 D4-D 4WD	11/13→	91 / 124	Adv		2433701	[–] 24337 17.6	16" -brake			92162100	ø 281 x 12 x 55	
2.0 VVT-i 4WD	12/12→	107 / 146	Ake		82074400		16" -brake		PRO	92162103	ø 281 x 12 x 55	
				PRO	92168803	ø 296 x 28 x 49.3	16" -brake			91068200	ø 172 x 32	
712100			Adv		2445201	[–] 24452 17.5	17" -brake	Ake		2433801	[–] 24338 15.4	
2.0 VVT-i 4WD	12/12→	111 / 151	Adv		2433701	[–] 24337 17.6	16" -brake	Ake		82509900		
			Ake		82074400					92162100	ø 281 x 12 x 55	
									PRO	92162103	ø 281 x 12 x 55	
712200			Ake		2433601	[–] 24336 17.5	⊕ LE	Ake		2433801	[–] 24338 15.4	
2.5 VVT-i 4WD	12/12→	132 / 180	Adv		2433701	[–] 24337 17.6	⊕ LIMD XLE	Ake		82509900		

T - Z

		kW / hp									
RAV 4 IV (ZSA4_, ALA4_) 12/12→											
712200			Ake		**82074400**				**92162100**	ø 281 x 12 x 55	
2.5 VVT-i 4WD	12/12→	132 / 180		PRO	**92168803**	ø 296 x 28 x 49.3	⊕ LIMD XLE		PRO **92162103**	ø 281 x 12 x 55	
				PRO	**92232703**	ø 275 x 25 x 46.5	⊕ LE				
RAV 4 Mk II (CLA2_, XA2_, ZCA2_, ACA2_) 06/00→11/05 → RAV 4 II (CLA2_, XA2_, ZCA2_, ACA2_), Page 1138											
REIZ I (GRX12_) 03/04→09/09 → MARK X I (GRX12_), Page 1134											
REIZ II (GRX13_) 10/09→ → MARK X II (GRX13_), Page 1134											
RUKUS (_AZE15_, _NZE15_, _ZRE15_) 05/10→ → COROLLA RUMION (_AZE15_, _NZE15_, _ZRE15_), Page 1121											
RUNX (ZZE12_, NDE12_, ZDE12_) 01/02→02/07 → COROLLA (ZZE12_, NDE12_, ZDE12_), Page 1116											
RUSH Closed Off-Road Vehicle (J2_) 03/06→											
712300			Sum		**2165001**	[+] 21650 15			**91068600**	ø 228.6 x 41.5	
1.3	03/06→	63 / 86									
1.5	03/06→	80 / 109									
1.5 4WD	03/06→	80 / 109			**92138200**	ø 273 x 16 x 37.5			**94034300**	ø 228,6 x 54	
RUSH Geländewagen geschlossen (J2_) 03/06→ → RUSH Closed Off-Road Vehicle (J2_), Page 1140											
SEQUOIA (UCK6_, UPK6_, USK6_) 11/07→											
712400			Adv		**2438601**	[+] 24386 17.9		Adv	**2465301**	[–] 24653 17.4	
4.7 4WD	11/07→	206 / 280									
5.7 4WD	11/07→	284 / 386									
SEQUOIA (UCK45_, UCK35_) 05/00→11/07											
712500			Adv		**2438601**	[+] 24386 17.9		Adv	**2465301**	[–] 24653 17.4	
4.7	05/00→11/07	175 / 238									
4.7	05/00→11/07	204 / 277									
4.7 4WD	05/00→11/07	175 / 238									
SIENNA (ASL3_, GSL3_) 02/11→											
712600								Adv	**2445201**	[–] 24452 17.5	
3.5 VVTi	02/11→	198 / 269							**2491801**	[–] 24918 15	
SIENNA (MCL2_, GSL2_) 05/03→02/10											
712700			Ake		**2385501**	[–] 23855 16		Sum	**2364601**	[+] 23646 16	
3.3 4WD	05/03→11/09	169 / 230									
3.5 VVti	10/06→11/09	198 / 269									
3.5 VVti 4WD	10/06→02/10	198 / 269									
SIENTA (NCP8_) 05/03→											
712800			Ake		**2531601**	[+] 25316 16.5	10/04→				
1.5	05/03→	81 / 110									
1.5 4WD	05/03→	77 / 105									
1.5 4WD	05/03→	81 / 110	Bre		**82501400**						
SOARER Coupe (_Z3_) 09/90→09/00											
712900			Ake		**2489201**	[+] 24892 18		Sum	**2149101**	[+] 21491 15.5	
2.5 Turbo	09/90→09/00	206 / 280									
4.0	05/92→09/00	191 / 260			**92109100**	ø 296 x 32 x 50.8			**92150400**	ø 307 x 16 x 67	→07/95
713000			Sum		**2179101**	[+] 21791 17		Sum	**2149101**	[+] 21491 15.5	
3.0	09/90→09/00	166 / 226							**92150400**	ø 307 x 16 x 67	→07/95
SOLUNA VIOS 07/02→											
713100			Ake		**2390401**	[+] 23904 16.6					
1.3 VVTi	07/02→	64 / 87									
1.5	07/02→	68 / 92									
SPRINTER CARIB 04/95→11/02											
713200			Ake		**2087001**	[o] 20870 15					
1.8 4WD	04/95→11/02	92 / 125									
SPRINTER CARIB 08/95→10/01											
713300			Ake		**2087001**	[o] 20870 15					
1.6	08/95→10/01	81 / 110									
1.8	08/95→10/01	85 / 116									
1.8 4WD	08/95→10/01	85 / 116									
STARLET (EP91) 04/96→03/99											
713400			Ake		**2087001**	[o] 20870 15			**91046900**	ø 180 x 28	
1.3	04/96→03/99	55 / 75	Ake		**82026600**				**97003700**		
					92076500	ø 238 x 18 x 42.8	⊕ ABS		**94017800**	ø 180,0 x 34.5	⊕ ABS
					92097900	ø 229 x 16 x 43.2	⊖ ABS				

T - Z

		kW / hp											
SUPRA (JZA80) 05/93→08/02													
		713500	Sum		**2149001**	[+] 21490 17.1							
3.0 i	05/93→08/02	168 / 228											
3.0 i Bi-Turbo	05/93→08/02	210 / 286											
		713600	Sum		**2195701**	[+] 21957 17		Sum		**2195501**	[+] 21955 16		
3.0 i Bi-Turbo	05/93→08/02	243 / 330							PRO	**92170903**	ø 324 x 16 x 67.5	⊕ wheel Ø 17"	
SW4 Geländewagen geschlossen (RZN1_, LN1_) 11/95→07/04 → HILUX Closed Off-Road Vehicle (RZN1_, LN1_), Page 1130													
SW4 Geländewagen geschlossen (TGN6_, KUN6_, GGN6_, TGN5_, LA 06/04→ → FORTUNER Closed Off-Road Vehicle (TGN6_, KUN6_, GGN6_, TGN5_, Page 1126													
SW4 Veículo todo-terreno fechado (RZN1_, LN1_) 11/95→07/04 → HILUX Closed Off-Road Vehicle (RZN1_, LN1_), Page 1130													
SW4 Veículo todo-terreno fechado (TGN6_, KUN6_, GGN6_, TGN5_ 06/04→ → FORTUNER Closed Off-Road Vehicle (TGN6_, KUN6_, GGN6_, TGN5_, Page 1126													
TACOMA II Pick-up (RN6_, RN5_, LN6_, YN6_, YN5_, LN5_) 08/88→07/05 → HILUX II Pickup (RN6_, RN5_, LN6_, YN6_, YN5_, LN5_), Page 1128													
TACOMA Pickup (TRN2_, GRN2_) 09/04→													
		713700	Sum		**2402401**	[+] 24024 17.8							
4.0	09/04→	175 / 238											
4.0 4WD	09/04→	175 / 238											
TACOMA Pick-up (TRN2_, GRN2_) 09/04→ → TACOMA Pickup (TRN2_, GRN2_), Page 1141													
TARAGO (MCR3_, ACR3_, CLR3_) 02/00→01/06 → PREVIA (MCR3_, ACR3_, CLR3_), Page 1136													
TARAGO (TCR2_, TCR1_) 05/90→08/00 → PREVIA (TCR2_, TCR1_), Page 1136													
TARAGO III (ACR5_, GSR5_) 10/05→ → PREVIA III (ACR5_, GSR5_), Page 1137													
TOWN ACE Box (KM8_, KM7_, CM8_, CM7_) 12/98→07/07													
		713800	Ake		**2355802**	[+] 23558 17		Sum		**2149101**	[+] 21491 15.5		
1.8 i (KR42)	12/98→07/07	60 / 82											
TOWN ACE Box 04/92→09/01													
		713900	Ake		**2355802**	[+] 23558 17		Sum		**2149101**	[+] 21491 15.5		
1.8 SBV (KR42)	02/97→01/99	56 / 76											
		714000	Ake		**2349101**	[–] 23491 12.5							
2.0	04/92→09/01	65 / 88											
TOWN ACE Kasten (KM8_, KM7_, CM8_, CM7_) 12/98→07/07 → TOWN ACE Box (KM8_, KM7_, CM8_, CM7_), Page 1141													
TOWN ACE Kasten 04/92→09/01 → TOWN ACE Box, Page 1141													
TOWN ACE SBV Box (KM8_, KM7_, CM8_, CM7_) 12/98→07/07 → TOWN ACE Box (KM8_, KM7_, CM8_, CM7_), Page 1141													
TOWN ACE SBV Kasten (KM8_, KM7_, CM8_, CM7_) 12/98→07/07 → TOWN ACE Box (KM8_, KM7_, CM8_, CM7_), Page 1141													
TUNDRA Pickup (_K4_, _K3_) 04/99→11/06													
		714100	Sum		**2481301**	[+] 24813 18				**91041500**	ø 295 x 50		
3.4	04/99→07/03	140 / 190											
3.4 4WD	04/99→07/03	140 / 190	Sum		**82050000**					**94021000**	ø 295,0 x 67		
		714200	Sum		**2402401**	[+] 24024 17.8				**91041500**	ø 295 x 50		
4.0	05/03→11/06	180 / 245											
4.0 4WD	05/03→11/06	180 / 245								**94036200**	ø 295,0 x 65		
TUNDRA Pick-up (_K4_, _K3_) 04/99→11/06 → TUNDRA Pickup (_K4_, _K3_), Page 1141													
TUNDRA Pickup (_K5_) 01/07→													
		714300	Adv		**2438601**	[+] 24386 17.9		Adv		**2465301**	[–] 24653 17.4		
5.7	01/07→	284 / 386											
5.7 4WD	01/07→	284 / 386											
TUNDRA Pick-up (_K5_) 01/07→ → TUNDRA Pickup (_K5_), Page 1141													
URBAN CRUISER (NSP1_, NLP1_, ZSP1_, NCP11_) 07/07→													
		714400	Ake		**2433601**	[–] 24336 17.5		Ake		**2461001**	[+] 24610 14.3		
1.33	04/09→	74 / 101											
1.33	04/10→	73 / 99											
1.4 D-4D	04/09→	66 / 90	Ake		**82074400**			Ake		**82509700**			
1.4 D-4D 4WD	04/09→	66 / 90											
					92199300	ø 275 x 22 x 46.5				**92199800**	ø 259 x 9 x 40.8		
		714500	Ake		**2433601**	[–] 24336 17.5							
1.5 VVTi	07/07→	80 / 109											
1.5 VVTi 4WD	04/09→	76 / 103			**92199300**	ø 275 x 22 x 46.5							
VEROSSA (JZX11_, GX11_) 10/00→11/03													
		714600						Sum		**2342901**	[+] 23429 15		
2.0 VVTi	10/00→11/03	118 / 160											
2.0 VVTi 4WD	10/00→11/03	118 / 160											
2.5 VVTi	10/00→11/03	147 / 200											

T - Z

		kW / hp											
VEROSSA (JZX11_, GX11_) 10/00→11/03													
2.5 VVTi	10/00→11/03	714700 206 / 280	Sum		**2149001**	[+] 21490 17.1		Sum		**2342901**	[+] 23429 15	
					92109100	ø 296 x 32 x 50.8						
VERSO (_AUR2_, _ZGR2_) 04/09→													
1.6	04/09→	714800 97 / 132	Bos		**2466801**	[+] 24668 18.9		Bos		**2492601**	[+] 24926 16.6	
1.8	04/09→	108 / 147										
2.0 D-4D	04/09→	93 / 126	Bos		**82054200**			Bos		**82054300**		
					92163900	ø 295 x 26 x 49.2				**92222500**	ø 297 x 11 x 58.4	
				PRO	**92163903**	ø 295 x 26 x 49.2				**91077300**	ø 185 x 32	
1.8	04/09→	714900 95 / 129	Adv		**2433701**	[–] 24337 17.6						
2.0 D-4D	11/12→	715000 91 / 124	Bos		**2500601**	[+] 25006 19.3		Bos		**2492601**	[+] 24926 16.6	
			Bos		**82054200**			Bos		**82054300**		
					92163900	ø 295 x 26 x 49.2				**92222500**	ø 297 x 11 x 58.4	
				PRO	**92163903**	ø 295 x 26 x 49.2				**91077300**	ø 185 x 32	
2.2 D-4D	04/09→	715100 110 / 150	Bos		**2494601**	[+] 24946 19.1	→11/10	Bos		**2492601**	[+] 24926 16.6	
2.2 D-CAT	04/09→	130 / 177	Bos		**2500601**	[+] 25006 19.3	12/10→	Bos		**82054300**		
			Bos		**82054200**					**92222500**	ø 297 x 11 x 58.4	
					92195300	ø 320 x 26 x 49.3				**91077300**	ø 185 x 32	
VERSO S (NLP12_, NCP12_, NSP12_) 11/10→													
1.33	11/10→	715200 70 / 95	Sum		**2526201**	[+] 25262 15.4						
1.33	11/10→	715300 73 / 99	Ake		**2433601**	[–] 24336 17.5		Ake		**2461001**	[+] 24610 14.3	⊕ rear disc brake
1.4 D4-D	11/10→	66 / 90	Ake		**82074400**			Ake		**82509700**		⊕ rear disc brake
					92199300	ø 275 x 22 x 46.5				**91076900**	ø 228.6 x 37	⊕ rear drum brake
									PRO	**92224003**	ø 259 x 9 x 30.4	⊕ rear disc brake
										97034800		⊕ rear drum brake
1.5	11/10→	715400 80 / 109	Adv		**2470801**	[–] 24708 17.6						
1.5 4WD	11/10→	76 / 103	Ake		**82074400**							
					92199300	ø 275 x 22 x 46.5						
VERSO SPORTVAN (_CLM2_, _ACM2_) 08/01→11/09													
→ AVENSIS VERSO (_CLM2_, _ACM2_), Page 1111													
VIOS/YARIS Saloon (NCP15_) 05/13→													
1.5	05/13→	715500 80 / 109	Adv		**2470801**	[–] 24708 17.6		Ake		**2461001**	[+] 24610 14.3	⊕ rear disc brake
					92156200	ø 275 x 22 x 46.3				**92156300**	ø 259 x 9 x 30.3	⊕ rear disc brake
VIOS/YARIS Saloon (ZSP9_, NCP9_) 08/07→													
1.0	08/07→	715600 52 / 71	Ake		**2434701**	[–] 24347 18.6				**91053500**	ø 200 x 32	
1.5	08/07→	80 / 109	Ake		**82074400**					**94034600**	ø 200,0 x 41	
1.5	08/07→	81 / 110			**92156100**	ø 255 x 22 x 46.3	⊕ J-made			**94036100**	ø 200,0 x 43.7	
					92164200	ø 258 x 22 x 46.2	⊕ F-made					
1.3	08/07→	715700 64 / 87	Ake		**2434701**	[–] 24347 18.6		Ake		**2461001**	[+] 24610 14.3	
1.3	10/12→	63 / 86	Adv		**2470801**	[–] 24708 17.6	⊕ rear disc brake	Ake		**82509700**		
1.3 4WD	08/07→	64 / 87	Ake		**82074400**					**91053500**	ø 200 x 32	
					92156200	ø 275 x 22 x 46.3	⊕ rear disc brake			**92156300**	ø 259 x 9 x 30.3	
										94034600	ø 200,0 x 41	
										94036100	ø 200,0 x 43.7	

T - Z

		kW / hp												
VIOS/YARIS Stufenheck (NCP15_) 05/13→ → VIOS/YARIS Saloon (NCP15_), Page 1142														
VIOS/YARIS Stufenheck (ZSP9_, NCP9_) 08/07→ → VIOS/YARIS Saloon (ZSP9_, NCP9_), Page 1142														
VIOS (SCP4_, NCP4_, AXP4_) 07/02→01/08														
		715800	Ake		2390401	[+] 23904 16.6								
1.3 VVTi	07/02→01/08	64 / 87												
1.5	07/02→01/08	68 / 92												
1.5 VVTi	07/02→01/08	78 / 106												
VITZ (NHP13_, NSP13_, NCP13_, KSP13_, NLP13_) 12/10→ → YARIS (NHP13_, NSP13_, NCP13_, KSP13_, NLP13_), Page 1143														
VITZ (SCP1_, NLP1_, NCP1_) 04/99→09/05 → YARIS (SCP1_, NLP1_, NCP1_), Page 1144														
VITZ (SCP9_, NSP9_, KSP9_, NCP9_, ZSP9_) 08/05→ → YARIS (SCP9_, NSP9_, KSP9_, NCP9_, ZSP9_), Page 1144														
VOXY (_AZR6_) 12/01→06/07 → NOAH/VOXY (_AZR6_), Page 1135														
WILL CYPHA (NCP7_) 05/01→07/05														
		715900	Ake		2351002	[+] 23510 15.5						91053500	ø 200 x 32	
1.3 VVTi	05/01→07/05	62 / 84		PRO	92115603	ø 255 x 20 x 43.2						94029300	ø 200 x 43	
1.5 VVTi 4WD	05/01→07/05	78 / 106												
WILL Vi (NCP19_) 01/00→12/01														
		716000	Ake		2390401	[+] 23904 16.6								
1.3	01/00→12/01	64 / 87												
WILL VS (ZZE12_, NZE12_) 03/01→04/04														
		716100	Ake		2351002	[+] 23510 15.5						91053500	ø 200 x 32	
1.5 VVTi 4WD	03/01→04/04	81 / 110			92138900	ø 255 x 25 x 49.3								
		716200			92138900	ø 255 x 25 x 49.3						91053500	ø 200 x 32	
1.8 VVTi	03/01→04/04	100 / 136												
1.8 VVTi 4WD	03/01→04/04	100 / 136												
1.8 VVTi GT	03/01→04/04	140 / 190												
WINDOM (MCV2_) 10/96→07/01														
		716300	Ake		2351302	[+] 23513 17				Ake		2359201	[–] 23592 15	08/99→
2.5	10/96→07/01	147 / 200		PRO	92077703	ø 275 x 28 x 49.2				Ake		2183301	[+] 21833 15.5	→07/99
3.0	10/96→07/01	155 / 211										92079300	ø 269 x 10 x 64.7	
												91059400	ø 170 x 40	
WINDOM (MCV3_) 08/01→07/04														
		716400	Ake		2385501	[–] 23855 16				Ake		2370201	[–] 23702 15.8	
3.0 VVTi G	08/01→07/04	158 / 215			92135800	ø 296 x 28 x 49.2						92139800	ø 269 x 12 x 64.8	
												91059400	ø 170 x 40	
WISH Großraumlimousine (ZGE2_) 04/09→ → WISH MPV (ZGE2_), Page 1143														
WISH Großraumlimousine (ZNE1_, ANE1_) 04/03→03/09 → WISH MPV (ZNE1_, ANE1_), Page 1143														
WISH MPV (ZGE2_) 04/09→														
		716500	Ake		2433601	[–] 24336 17.5								
1.8	04/09→	106 / 144	Ake		82074400									
1.8 4WD	04/09→	98 / 133												
		716600	Ake		2433601	[–] 24336 17.5				Ake		2370201	[–] 23702 15.8	
2.0	04/09→	116 / 158	Ake		82074400					Ake		82515200		
2.0 4WD	04/09→	116 / 158												
WISH MPV (ZNE1_, ANE1_) 04/03→03/09														
		716700	Ake		2392801	[–] 23928 17				Ake		2370201	[–] 23702 15.8	
1.8 Hi	04/03→03/09	97 / 132										91063200	ø 170 x 32	
1.8 Hi 4WD	04/03→03/09	92 / 125												
2.0 Zi	04/03→03/09	114 / 155										97031900		
XA (NCP6_) 05/04→07/07 → IST (NCP6_), Page 1131														
YARIS/VITZ (NHP13_, NSP13_, NCP13_, KSP13_, NLP13_) 12/10→ → YARIS (NHP13_, NSP13_, NCP13_, KSP13_, NLP13_), Page 1143														
YARIS/VITZ (SCP1_, NLP1_, NCP1_) 04/99→09/05 → YARIS (SCP1_, NLP1_, NCP1_), Page 1144														
YARIS/VITZ (SCP9_, NSP9_, KSP9_, NCP9_, ZSP9_) 08/05→ → YARIS (SCP9_, NSP9_, KSP9_, NCP9_, ZSP9_), Page 1144														
YARIS (NHP13_, NSP13_, NCP13_, KSP13_, NLP13_) 12/10→														
		716800	Ake		2434701	[–] 24347 18.6				Ake		2461001	[+] 24610 14.3	
1.0	09/11→	51 / 69												
1.3 VVT-i	12/10→	63 / 86												

T - Z

		kW / hp											
YARIS (NHP13_, NSP13_, NCP13_, KSP13_, NLP13_) 12/10→													
		716800	Adv		2470801	[–] 24708 17.6	⊕ rear disc brake	Ake		82509700		
1.0	09/11→	51 / 69										
1.3 VVT-i	12/10→	63 / 86	Ake		82074400					91053500	ø 200 x 32	
					92156200	ø 275 x 22 x 46.3	⊕ rear disc brake			92156300	ø 259 x 9 x 30.3	
										94034600	ø 200,0 x 41	
										94036100	ø 200,0 x 43.7	
		716900	Adv		2470801	[–] 24708 17.6	⊕ J-made			91076900	ø 228.6 x 37	
1.3	09/11→	70 / 95										
1.3	09/11→	73 / 99	Ate		2402201	[+] 24022 17.7	⊕ F-made					
1.3 4WD	12/10→	70 / 95	Ake		82074400							
					92156200	ø 275 x 22 x 46.3						
		717000	Ate		2402201	[+] 24022 17.7		Ate		2457401	[+] 24574 15	
1.4 D-4D	09/11→	66 / 90	Ate		82029200			Ate		82029300		
					92164200	ø 258 x 22 x 46.2		Lkh		91075000	ø 203 x 39	
										92161900	ø 278 x 9 x 25	
		717100	Ake		2334803	[+] 23348 16.5						
1.5	12/10→	76 / 103										
1.5	12/10→	80 / 109		PRO	92103603	ø 235 x 18 x 43.2						
		717200	Ake		2433601	[–] 24336 17.5		Ate		2457401	[+] 24574 15	
1.5 Hybrid	03/12→	55 / 75			92156200	ø 275 x 22 x 46.3		Ate		82029300		
										92161900	ø 278 x 9 x 25	
YARIS (SCP1_, NLP1_, NCP1_) 04/99→09/05													
		717300	Bos		2334001	[+] 23340 16.8	⊕ rear drum brake ⊕ F-made	Sum		2352101	[+] 23521 14	⊕ rear disc brake
1.0 16V	04/99→09/05	50 / 68										
1.0 16V	03/03→09/05	48 / 65	Ake		2334803	[+] 23348 16.5	⊕ rear drum brake ⊕ J-made	Sum		82072500		⊕ rear disc brake
1.3	04/02→09/05	64 / 87										
1.3	09/03→12/04	57 / 76								91053500	ø 200 x 32	⊕ J-made ⊕ rear drum brake
1.3 16V	11/99→09/05	63 / 86	Ake		2351002	[+] 23510 15.5	⊕ rear disc brake					
1.4 D-4D	12/01→09/05	55 / 75										
1.4 D-4D	05/05→09/05	66 / 90	Ake		82059400		⊕ rear drum brake ⊕ J-made	Bos		91064500	ø 200 x 32	⊕ F-made ⊕ rear drum brake
			Adv		82075300		⊕ rear disc brake	Ake		97014400		
				PRO	92103603	ø 235 x 18 x 43.2	⊕ rear drum brake	Bos		97032000		⊕ rear drum brake Bosch ⊕ F-made
				PRO	92115603	ø 255 x 20 x 43.2	⊕ rear disc brake			97038400		⊕ rear drum brake Bosch ⊕ F-made ⊕ J-made
								Bos		84064500	bore ø 19 ø 200 x 32	⊕ F-made ⊕ rear drum brake
									PRO	92126203	ø 269 x 9 x 56	⊕ rear disc brake
										94034600	ø 200,0 x 41	
										94029300	ø 200 x 43	⊕ rear drum brake
		717400	Ake		2351002	[+] 23510 15.5		Sum		2352101	[+] 23521 14	
1.5 TS	01/03→09/05	77 / 105										
1.5 VVT-i TS	03/03→07/05	110 / 150	Adv		82075300			Sum		82072500		
				PRO	92115603	ø 255 x 20 x 43.2			PRO	92126203	ø 269 x 9 x 56	
		717500	Bos		2334001	[+] 23340 16.8	⊕ rear drum brake ⊕ F-made	Sum		2352101	[+] 23521 14	
1.5 VVT-i TS	04/01→09/05	78 / 106										
			Ake		2351002	[+] 23510 15.5	⊕ rear disc brake	Sum		82072500		
			Adv		82075300		⊕ rear disc brake		PRO	92126203	ø 269 x 9 x 56	
				PRO	92115603	ø 255 x 20 x 43.2						
YARIS (SCP9_, NSP9_, KSP9_, NCP9_, ZSP9_) 08/05→													
		717600	Ate		2402201	[+] 24022 17.7		Ate		2457401	[+] 24574 15	
1.0 GPL	01/06→	51 / 69	Ate		82029200			Ate		82029300		

→

		kW / hp										
YARIS (SCP9_, NSP9_, KSP9_, NCP9_, ZSP9_) 08/05→												
		717600										
1.0 GPL	01/06→	51 / 69		92164200	ø 258 x 22 x 46.2		Lkh	91075000	ø 203 x 39	
								92161900	ø 278 x 9 x 25	
		717700	Ake	2434701	[–] 24347 18.6	⊕ J-made	Ate	2457401	[+] 24574 15	
1.0 VVT-i	08/05→	51 / 69	Ate	2402201	[+] 24022 17.7	⊕ F-made	Ate	82029300		
			Ate	82029200		⊕ F-made	Lkh	91075000	ø 203 x 39	
				92164200	ø 258 x 22 x 46.2		APL - brake	84075000	bore ø 20.6 ø 203 x 39	
								92161900	ø 278 x 9 x 25	
		717800	Ate	2402201	[+] 24022 17.7			91076900	ø 228.6 x 37	
1.33 VVT-i	03/09→	74 / 100								
1.33 VVT-i	07/10→	73 / 99	Ate	82029200						
				92164200	ø 258 x 22 x 46.2					
		717900	Ake	2434701	[–] 24347 18.6		Lkh	91075000	ø 203 x 39	
1.3 4WD	08/07→	64 / 87	Ake	82074400				94034600	ø 200,0 x 41	
				92156100	ø 255 x 22 x 46.3	⊕ J-made		94036100	ø 200,0 x 43.7	
				92164200	ø 258 x 22 x 46.2					
		718000	Ate	2402201	[+] 24022 17.7		Ate	2457401	[+] 24574 15	
1.3 VVT-i	08/05→	64 / 87								
1.4 D-4D	08/05→	66 / 90	Ate	82029200			Ate	82029300		
				92164200	ø 258 x 22 x 46.2		Lkh	91075000	ø 203 x 39	
							APL - brake	84075000	bore ø 20.6 ø 203 x 39	
								92161900	ø 278 x 9 x 25	
		718100	Ate	2402201	[+] 24022 17.7			91053500	ø 200 x 32	
1.3 VVT-i	11/05→	63 / 86	Ake	82074400				94034600	ø 200,0 x 41	
				92156100	ø 255 x 22 x 46.3	⊕ J-made		94036100	ø 200,0 x 43.7	
				92164200	ø 258 x 22 x 46.2	⊕ F-made				
		718200	Ake	2434701	[–] 24347 18.6			91053500	ø 200 x 32	
1.5 (NCP91)	11/05→	80 / 109	Ake	82074400				94034600	ø 200,0 x 41	
				92156100	ø 255 x 22 x 46.3	⊕ J-made		94036100	ø 200,0 x 43.7	
				92164200	ø 258 x 22 x 46.2	⊕ F-made				
		718300	Adv	2470801	[–] 24708 17.6		Ake	2461001	[+] 24610 14.3	
1.8 VVTi	11/05→	97 / 132								
1.8 VVTi	01/07→	98 / 133	Ake	82074400			Ake	82509700		
				92156200	ø 275 x 22 x 46.3			92156300	ø 259 x 9 x 30.3	
YARIS Saloon (ZSP9_, NCP9_) 08/07→ → VIOS/YARIS Saloon (ZSP9_, NCP9_), Page 1142										
YARIS Stufenheck (ZSP9_, NCP9_) 08/07→ → VIOS/YARIS Saloon (ZSP9_, NCP9_), Page 1142										
YARIS VERSO (_NLP2_, _NCP2_) 08/99→09/05										
		718400	Ake	2351002	[+] 23510 15.5		Sum	2352101	[+] 23521 14	⊕ rear disc brake
1.3 (NCP22)	08/99→09/05	62 / 84								
1.3 (NCP22)	08/99→09/05	63 / 86	Adv	82075300			Sum	82072500		⊕ rear disc brake
1.4 D-4D (NLP22)	12/01→09/05	55 / 75								
1.5 (NCP21)	03/00→09/05	78 / 106		92115603	ø 255 x 20 x 43.2			91053500	ø 200 x 32	⊕ rear drum brake
1.5 (NCP21)	05/03→09/05	77 / 105					Ake	97014400		
								83053500	bore ø 19 ø 200 x 32	⊕ rear drum brake
								92126203	ø 269 x 9 x 56	⊕ rear disc brake
								91063200	ø 170 x 32	⊕ rear disc brake
								97031900		⊕ rear disc brake

TOYOTA

TOYOTA

kW / hp

ZACE (_TGN4_, _KUN4_) 07/03→ → KIJANG INNOVA (_TGN4_, _KUN4_), Page 1131

ZELAS Coupe (AGT20) 08/10→

718500			Adv		2433701	[–] 24337 17.6			Ake		2461001	[+] 24610 14.3	
2.5 VVT-i	08/10→	131 / 178		PRO	92168803	ø 296 x 28 x 49.3							

TOYOTA (FAW)

TOYOTA (FAW)

kW / hp

LAND CRUISER 100 10/03→07/07

718600			Sum		2352402	[+] 23524 17.7			Sum		2353902	[–] 23539 17.5	
4.7 All-wheel Drive	10/03→07/07	175 / 238		PRO	92108103	ø 313 x 32 x 70				PRO	92172803	ø 329 x 18 x 102.5	

LAND CRUISER 200 12/07→

718700			Adv		2438601	[+] 24386 17.9				ABS	92168700	ø 268 x 12 x 73.2	
4.0 All-wheel Drive	12/07→	179 / 240											
718800			Adv		2438601	[+] 24386 17.9							
4.7	12/07→	202 / 275											

PRADO 10/03→06/10

718900			Sum		2402401	[+] 24024 17.8			Sum		2194701	[–] 21947 15	
4.0 All-wheel Drive	10/03→06/10	179 / 240	Sum		82050000				Sum		82050200		
					92137300	ø 338 x 28 x 67.3				PRO	92170103	ø 312 x 18 x 68	
											91066100	ø 215 x 45	

TOYOTA (GAC)

TOYOTA (GAC)

kW / hp

HIGHLANDER 05/09→

719000									Ake		2548101	[–] 25481 15.2	
2.7	05/09→	140 / 190											
3.5 4WD	05/09→	201 / 273											

TROLLER

TROLLER

kW / hp

T4 I 09/99→

719100									Luc		2342401	[–] 23424 17.8	
3.0 TDi 4WD	09/99→	120 / 163											

TVR

TVR

kW / hp

CHIMAERA 01/93→10/03

719200			Ate		2310301	[–] 23103 17.5			Luc		2098101	[–] 20981 13.7	
4.0	01/93→10/03	177 / 241											
5.0	01/93→10/03	250 / 340	Ate		82027100				Luc		82031900		
			Ate		82062900				Luc		82062800		

GRIFFITH (TCT_) 01/93→03/02

719300			Ate		2310301	[–] 23103 17.5			Luc		2098101	[–] 20981 13.7	
5.0	01/93→03/02	243 / 330	Ate		82027100				Luc		82031900		
			Ate		82062900				Luc		82062800		

VAUXHALL

VAUXHALL

kW / hp

ADAM 10/12→

719400			Bos		2509501	[+] 25095 17	14'' -brake				91065300	ø 203.2 x 38	8'' -brake →E6999999 ⊕ rear drum brake
1.0	07/14→	85 / 116	Ate		82032000		15'' -brake				91065400	ø 228.6 x 42	9'' -brake →E6999999 ⊕ rear drum brake

→

		kW / hp										
ADAM 10/12→												
719400												
1.0	07/14→	85 / 116		PRO	92145703	ø 257 x 22 x 40.6	14'' -brake	Lkh		84065300	bore ø 19 ø 203.2 x 38	8'' -brake →E6999999 ⊕ rear drum brake
				PRO	92145803	ø 284 x 22 x 43.2	15'' -brake			84065402	bore ø 19 ø 228.6 x 42	9'' -brake →E6999999 ⊕ rear drum brake
										94027200	ø 228,3 x 47.5	9'' -brake ⊕ rear drum brake
										94027600	ø 203,2 x 48	8'' -brake ⊕ rear drum brake
719500			Bos		2509501	[+] 25095 17				91065300	ø 203.2 x 38	8" -brake
1.2	10/12→	51 / 69										
1.4	10/12→	64 / 87										
1.4	10/12→	74 / 101		PRO	92145703	ø 257 x 22 x 40.6				91065400	ø 228.6 x 42	9" -brake
1.4 LPG	07/13→	64 / 87										
					TPM0008					TPM0008		
AGILA Mk I (A) 02/00→03/08												
719600			Bos		2360501	[+] 23605 15.5				91058000	ø 180 x 26	→2G999999
1.0 12V	02/00→11/06	44 / 60										
1.0 12V	09/00→08/05	43 / 58	Bos		82063800					91065200	ø 200 x 29	3G000001→
1.2 16V	09/00→03/08	55 / 75										
1.2 16V Twinport	07/04→11/06	59 / 80	Bos		82510100					97032300		→2G999999
										97032500		3G000001→
				PRO	92110803	ø 246.5 x 12 x 44.2						
				PRO	92135303	ø 253 x 17 x 49.1	⊕ ABS			84058000	bore ø 15.9 ø 180 x 26	→2G999999
										84065200	bore ø 15.9 ø 200 x 29	3G000001→
										94023900	ø 180,0 x 34.5	→2G999999
										94024000	ø 180,0 x 34.5	⊖ ABS →2G999999
										94027800	ø 200 x 38	4G000001→
										94033200	ø 200 x 38	3G000001→ →3G999999
AGILA Mk II (B) 01/08→												
719700			Luc		2397302	[+] 23973 17.3		Bos		91064500	ø 200 x 32	
1.0 12V	01/08→	48 / 65										
1.2 i 16V	01/08→	63 / 86	Luc		82075700					97032300		
1.3 CDTI	01/08→	55 / 75										
				PRO	92148903	ø 252 x 20 x 40		Bos		84064502	bore ø 19 ø 200 x 32	
719800			Luc		2397302	[+] 23973 17.3		Bos		91064500	ø 200 x 32	
1.0 i	08/11→	50 / 68										
			Luc		82075700					97032300		
				PRO	92148903	ø 252 x 20 x 40						
719900			Luc		2397302	[+] 23973 17.3		Bos		91064500	ø 200 x 32	
1.2 i 16V	01/08→	69 / 94										
				PRO	92148903	ø 252 x 20 x 40				97032300		
AMPERA 03/12→												
720000					2503401	[+] 25034 18.8				2509602	[+] 25096 16.2	
EV 150 (D1JOI)	03/12→	111 / 151										
				epad	2503481	[+] 25034 18.8						
ANTARA (J26, H26) 08/06→												
720100			Man		2451001	[+] 24510 16.9		Man		2449801	[+] 24498 15.4	
2.0 CDTi	08/06→	93 / 126										
2.0 CDTI	08/06→	110 / 150										
2.0 CDTI FWD	08/06→	110 / 150	Man		82077300			Man		82077200		
2.2 CDTi	12/10→	120 / 163										
2.2 CDTi	12/10→	135 / 184			92165400	ø 296 x 29 x 51.6				92165500	ø 303 x 20 x 71.7	
2.2 CDTi FWD	12/10→	120 / 163										
2.4	08/06→	103 / 140								91067100	ø 188.4 x 26	
2.4	11/10→	126 / 171										
2.4	11/10→	126 / 171										
2.4	12/10→	123 / 167								97038500		
2.4 FWD	08/06→	103 / 140										
3.0	11/10→	188 / 256										
3.2 V6	11/06→	167 / 227										
720200			Man		2451001	[+] 24510 16.9		Man		2449801	[+] 24498 15.4	⊖ CN
2.4	12/10→	123 / 167										
			Man		82077300			Man		82077200		⊖ CN
					92165400	ø 296 x 29 x 51.6				92165500	ø 303 x 20 x 71.7	
										91067100	ø 188.4 x 26	

T - Z

		kW / hp											
ANTARA (J26, H26) 08/06→													
		720200											
2.4	12/10→	123 / 167								97038500			
ARENA Combi 03/98→08/01													
		720300	Ben		2092602	[+] 20926 18.5		Luc		91015700	ø 254 x 56	⊖ ABS
1.9 D	03/98→08/01	44 / 60		PRO	92017203	ø 252 x 24 x 53.5				91049700	ø 254 x 57	⊕ ABS
								Ben		91064300	ø 255 x 46	→04/01
										83015702	bore ø 25.4 ø 254 x 56	⊖ ABS
										84015700	bore ø 25.4 ø 254 x 56	⊖ ABS
										94030800	ø 255 x 56	⊖ ABS
		720400	Ben		2092602	[+] 20926 18.5				91049700	ø 254 x 57	
2.5 D	03/98→08/01	55 / 75		PRO	92017203	ø 252 x 24 x 53.5						
ARENA Van 03/98→08/01													
		720500	Ben		2092602	[+] 20926 18.5		Luc		91015700	ø 254 x 56	⊖ ABS
1.9 D	03/98→08/01	44 / 60		PRO	92017203	ø 252 x 24 x 53.5				91049700	ø 254 x 57	⊕ ABS
								Ben		91064300	ø 255 x 46	→04/01
										83015702	bore ø 25.4 ø 254 x 56	⊖ ABS
										84015700	bore ø 25.4 ø 254 x 56	⊖ ABS
										94030800	ø 255 x 56	⊖ ABS
		720600	Ben		2092602	[+] 20926 18.5				91049700	ø 254 x 57	
2.5 D	03/98→08/01	55 / 75		PRO	92017203	ø 252 x 24 x 53.5						
ASTRA GTC Mk VI (J) 10/11→													
		720700			2503101	[+] 25031 18.8	15" -brake			2509601	[+] 25096 16.2	15" -brake
1.4	10/11→	74 / 101										
1.4	10/11→	88 / 120										
1.4	10/11→	103 / 140			2503181	[+] 25031 18.8	15" -brake			2509602	[+] 25096 16.2	16" -brake
1.6	10/11→	132 / 180		epad								
1.6 SIDI	12/12→	125 / 170			2503401	[+] 25034 18.8	16" -brake			2509681	[+] 25096 16.2	15" -brake
1.6 SIDI	09/13→	147 / 200							epad			
1.7 CDTi	10/11→	81 / 110										
1.7 CDTi	10/11→	96 / 131		epad	2503481	[+] 25034 18.8	16" -brake			82513400		
2.0 BiTurbo CDTI	12/12→	143 / 194										
2.0 CDTi	10/11→	121 / 165	Man		82505200				PRO	92205503	ø 268 x 12 x 45.1	15" -brake
2.0 VXR	04/12→	206 / 280										
				PRO	92198903	ø 276 x 26 x 45.5	15" -brake		PRO	92205703	ø 292 x 12 x 44.9	16" -brake
				PRO	92205603	ø 300 x 26 x 45.5	16" -brake					
		720800	Bre		2332502	[+] 23325 16	18" -brake			2509602	[+] 25096 16.2	15" 16" 17" -brake →E0999999, E1999999 →E3999999, E8999999 →EG999999
1.6 CDTi	07/14→	81 / 110										
1.6 CDTi	07/14→	100 / 136	Man		2441201	[+] 24412 19.1	17" -brake					
					2503101	[+] 25031 18.8	15" -brake		PRO	92205503	ø 268 x 12 x 45.1	15" -brake
				epad	2503181	[+] 25031 18.8	15" -brake		PRO	92205703	ø 292 x 12 x 44.9	16" -brake →A8049708, AG057579
					2503401	[+] 25034 18.8	16" -brake					
				epad	2503481	[+] 25034 18.8	16" -brake					
			Bre		82072400		18" -brake					
				PRO	92198903	ø 276 x 26 x 45.5	15" -brake					
				PRO	92205603	ø 300 x 26 x 45.5	16" -brake					
				PRO	92256803	ø 321 x 30 x 45.6	17" -brake					
ASTRA Mk III (F) Cabriolet 05/93→03/01 → ASTRA Mk III (F) Convertible, Page 1148													
ASTRA Mk III (F) Convertible 05/93→03/01													
		720900	Ate		2054701	[o] 20547 16.8		Ate		2114001	[–] 21140 15.7	⊖ CN ⊕ rear disc brake
1.4 i	05/93→03/01	60 / 82										
1.4 i 16V	01/96→03/01	66 / 90			98015800	L685				91044900	ø 200 x 45	⊕ rear drum brake

T - Z

kW / hp

ASTRA Mk III (F) Convertible 05/93→03/01

720900													
1.4 i	05/93→03/01	60 / 82	Ate		82030600					97008300			⊕ rear drum brake
1.4 i 16V	01/96→03/01	66 / 90	Ate		82062900					92057000	ø 260 x 10 x 69.2		⊖ CN ⊕ rear disc brake
				PRO	92029603	ø 236 x 20 x 41				94008600	ø 200,0 x 52.5		⊕ rear drum brake
721000			Ate		2054701	[o] 20547 16.8		Ate		2114001	[–] 21140 15.7		⊖ CN ⊕ rear disc brake
1.6 i	01/96→03/01	55 / 75			98015800	L685				91044900	ø 200 x 45		⊖ IND ⊕ rear drum brake
			Ate		82030600			Luc		91049000	ø 230 x 42		⊕ IND ⊕ rear drum brake
			Ate		82062900					97008300			⊖ IND ⊕ rear drum brake
				PRO	92029603	ø 236 x 20 x 41				97011800			⊕ IND ⊕ rear drum brake
										92057000	ø 260 x 10 x 69.2		⊖ CN ⊕ rear disc brake
										94008600	ø 200,0 x 52.5		⊖ IND ⊕ rear drum brake
										94020300	ø 230,0 x 50.2		⊕ IND ⊕ rear drum brake
721100			Ate		2186201	[o] 21862 18.3		Ate		2114001	[–] 21140 15.7		⊕ rear disc brake
1.8 16V	11/94→03/01	85 / 116	Ate		82030600			Ate		82025700			
			Ate		82062900			Ate		82062900			
				PRO	92039203	ø 256 x 24 x 41				91044900	ø 200 x 45		⊕ rear drum brake
										97008300			⊕ rear drum brake
										92057000	ø 260 x 10 x 69.2		⊕ rear disc brake
										94008600	ø 200,0 x 52.5		⊕ rear drum brake
										91018400	ø 160 x 24.5		⊕ rear disc brake
										97008400			

ASTRA Mk IV (G) Cabriolet 03/01→07/06 → ASTRA Mk IV (G) Convertible, Page 1149

ASTRA Mk IV (G) Convertible 03/01→07/06

721200			Ate		2306302	[+] 23063 17.3		Bos		2325803	[+] 23258 16.9	Bosch	
1.6 16V	03/01→10/05	74 / 101			98023300	L720	⊕ on-board comp.	Luc		2341703	[+] 23417 15.2	Lucas	
			Ate		82062900			Luc		82060100			
				PRO	92091803	ø 256 x 24 x 41		Luc		82063300			
								Bos		82063700			
									PRO	92092003	ø 240 x 10 x 42.7		
721300			Ate		2306302	[+] 23063 17.3		Bos		2325803	[+] 23258 16.9	Bosch	
1.6 16V	03/03→10/05	76 / 103			98023300	L720	⊕ on-board comp.	Luc		2341703	[+] 23417 15.2	Lucas	
			Ate		82062900			Luc		82060100			
				PRO	92091803	ø 256 x 24 x 41			PRO	92092003	ø 240 x 10 x 42.7		
721400			Ate		2383201	[+] 23832 19.6		Bos		2325803	[+] 23258 16.9	Bosch	
1.8 16V	03/01→10/05	92 / 125	Ate	epad	2383281	[+] 23832 19.6		Luc		2341703	[+] 23417 15.2	Lucas	
2.2 16V	03/01→10/05	108 / 147			98029800	L750	⊖ elec. damp. susp.	Luc		82060100			
					98031400	L287	⊕ elec. damp. susp.	Luc		82063300			
			Ate		82032000			Bos		82063700			
			Ate		82062900				PRO	92092103	ø 264 x 10 x 42		
				PRO	92091903	ø 280 x 25 x 42							
721500			Ate		2311701	[+] 23117 20.2		Bos		2325803	[+] 23258 16.9	Bosch	
2.0	09/02→07/06	147 / 199											
2.0 Turbo	03/02→10/05	141 / 192											

T - Z

		kW / hp											
ASTRA Mk IV (G) Convertible 03/01→07/06													
721500			Ate		82032000			Luc		2341703	[+] 23417 15.2	Lucas
2.0	09/02→07/06	147 / 199										
2.0 Turbo	03/02→10/05	141 / 192	Ate		82062900			Luc		82060100		
				PRO	92110903	ø 308 x 25 x 42		Luc		82063300		
								Bos		82063700		
									PRO	92092103	ø 264 x 10 x 42	
ASTRA Mk IV (G) Coupe (F67) 03/00→08/05													
721600			Ate		2383201	[+] 23832 19.6		Bos		2325803	[+] 23258 16.9	Bosch
1.6 16V	03/00→08/05	76 / 103										
			Ate	epad	2383281	[+] 23832 19.6		Luc		2341703	[+] 23417 15.2	Lucas
					98029800	L750	⊖ elec. damp. susp.	Luc		82060100		
					98031400	L287	⊕ elec. damp. susp.	Luc		82063300		
			Ate		82032000			Bos		82063700		
			Ate		82062900				PRO	92092103	ø 264 x 10 x 42	
				PRO	92091903	ø 280 x 25 x 42				TPM0008		
					TPM0007							
721700			Ate		2383201	[+] 23832 19.6		Bos		2325803	[+] 23258 16.9	Bosch
1.8 16V	03/00→08/05	85 / 115										
1.8 16V	09/00→08/05	92 / 125										
2.2 16V	03/00→08/05	108 / 147	Ate	epad	2383281	[+] 23832 19.6		Luc		2341703	[+] 23417 15.2	Lucas
					98029800	L750	⊖ elec. damp. susp.	Luc		82060100		
					98031400	L287	⊕ elec. damp. susp.	Luc		82063300		
			Ate		82032000			Bos		82063700		
			Ate		82062900				PRO	92092103	ø 264 x 10 x 42	
				PRO	92091903	ø 280 x 25 x 42						
721800			Ate		2383201	[+] 23832 19.6		Bos		2325803	[+] 23258 16.9	Bosch
1.8 16V Dualfuel	09/02→08/05	87 / 118										
			Ate	epad	2383281	[+] 23832 19.6		Luc		2341703	[+] 23417 15.2	Lucas
					98023300	L720	⊕ on-board comp.	Luc		82060100		
					98029800	L750	⊕ 2383201 ⊖ elec. damp. susp.	Luc		82063300		
					98031400	L287	⊕ 2383201 ⊕ elec. damp. susp.	Bos		82063700		
			Ate		82032000				PRO	92092103	ø 264 x 10 x 42	
			Ate		82062900							
				PRO	92091903	ø 280 x 25 x 42						
721900			Ate		2311701	[+] 23117 20.2		Bos		2325803	[+] 23258 16.9	Bosch
2.0	08/02→05/05	147 / 199										
2.0 16V Turbo	09/00→08/05	140 / 190	Ate		82032000			Luc		2341703	[+] 23417 15.2	Lucas
			Ate		82062900			Luc		82060100		
				PRO	92091903	ø 280 x 25 x 42		Luc		82063300		
								Bos		82063700		
									PRO	92092103	ø 264 x 10 x 42	
ASTRA Mk IV (G) Estate 02/98→05/05													
722000			Ate		2306302	[+] 23063 17.3		Bos		2325803	[+] 23258 16.9	⊕ rear disc brake Bosch
1.2 16V	02/98→09/00	48 / 65										
					98023300	L720	⊕ on-board comp.	Luc		2341703	[+] 23417 15.2	⊕ rear disc brake Lucas
			Ate		82062900			Luc		82060100		
					92091700	ø 256 x 11 x 41	⊕ rear drum brake	Luc		82063300		

T - Z

		kW / hp										
ASTRA Mk IV (G) Estate 02/98→05/05												
		722000		PRO	**92091803**	ø 256 x 24 x 41	⊕ rear disc brake	Bos		**82063700**		
1.2 16V	02/98→09/00	48 / 65								**91044900**	ø 200 x 45	⊕ rear drum brake
										97008300		⊕ rear drum brake
				PRO					PRO	**92092003**	ø 240 x 10 x 42.7	⊕ rear disc brake
										94008600	ø 200,0 x 52.5	⊕ rear drum brake
		722100	Ate		**2306302**	[+] 23063 17.3		Bos		**2325803**	[+] 23258 16.9	⊕ rear disc brake Bosch
1.2 16V	09/00→05/05	55 / 75			**98023300**	L720	⊕ on-board comp.	Luc		**2341703**	[+] 23417 15.2	⊕ rear disc brake Lucas
			Ate		**82062900**			Luc		**82060100**		
					92091700	ø 256 x 11 x 41	→09/01	Luc		**82063300**		
				PRO	**92091803**	ø 256 x 24 x 41	09/01→	Bos		**82063700**		
										91044900	ø 200 x 45	⊕ rear drum brake
										97008300		⊕ rear drum brake
									PRO	**92092003**	ø 240 x 10 x 42.7	⊕ rear disc brake
										94008600	ø 200,0 x 52.5	⊕ rear drum brake
		722200	Ate		**2306302**	[+] 23063 17.3		Bos		**2325803**	[+] 23258 16.9	⊕ rear disc brake Bosch
1.4 16V	02/98→05/05	66 / 90										
1.6	03/98→04/04	55 / 75			**98023300**	L720	⊕ on-board comp.	Luc		**2341703**	[+] 23417 15.2	⊕ rear disc brake Lucas
1.6	03/98→04/04	62 / 84										
1.6 Dualfuel	07/00→05/05	62 / 86	Ate		**82062900**			Luc		**82060100**		
1.7 CDTI 16V	04/03→05/05	59 / 80										
1.7 DTI 16V	02/00→05/05	55 / 75		PRO	**92091803**	ø 256 x 24 x 41		Luc		**82063300**		
1.7 TD	02/98→08/00	50 / 68						Bos		**82063700**		
								Luc		**91049000**	ø 230 x 42	⊕ rear drum brake →12999999, 15999999 →16999999, 18999999 →1G
										91060100	ø 230 x 42	⊕ rear drum brake 22000001, 25000001→ 26000001, 28000001→ 4G000001→
										97011800		⊕ rear drum brake
									PRO	**92092003**	ø 240 x 10 x 42.7	⊕ rear disc brake
										94020300	ø 230,0 x 50.2	⊕ rear drum brake
		722300	Ate		**2306302**	[+] 23063 17.3		Bos		**2325803**	[+] 23258 16.9	⊕ rear disc brake Bosch
1.6	12/02→05/05	76 / 103			**98023300**	L720	⊕ on-board comp.	Luc		**2341703**	[+] 23417 15.2	⊕ rear disc brake Lucas
			Ate		**82062900**			Luc		**82060100**		
				PRO	**92091803**	ø 256 x 24 x 41		Luc		**91049000**	ø 230 x 42	⊕ rear drum brake →12999999, 15999999 →16999999, 18999999 →1G
				PRO	**92091903**	ø 280 x 25 x 42				**91060100**	ø 230 x 42	⊕ rear drum brake 22000001, 25000001→ 26000001, 28000001→ 4G000001→
										97011800		⊕ rear drum brake
									PRO	**92092003**	ø 240 x 10 x 42.7	⊕ rear disc brake
										94020300	ø 230,0 x 50.2	⊕ rear drum brake
		722400	Ate		**2306302**	[+] 23063 17.3		Bos		**2325803**	[+] 23258 16.9	⊕ rear disc brake Bosch
1.6 16V	03/98→04/04	74 / 101										
1.6 Dualfuel	03/98→04/04	63 / 85			**98023300**	L720	⊕ on-board comp.	Luc		**2341703**	[+] 23417 15.2	⊕ rear disc brake Lucas
			Ate		**82062900**			Luc		**82060100**		
				PRO	**92091803**	ø 256 x 24 x 41		Luc		**82063300**		
				PRO	**92091903**	ø 280 x 25 x 42		Bos		**82063700**		
								Luc		**91049000**	ø 230 x 42	⊕ rear drum brake →12999999, 15999999 →16999999, 18999999 →1G

T - Z

30 kW / hp

ASTRA Mk IV (G) Estate 02/98→05/05

722400														
1.6 16V	03/98→04/04	74 / 101										91060100	ø 230 x 42	⊕ rear drum brake 22000001, 25000001→ 26000001, 28000001→ 4G000001→
1.6 Dualfuel	03/98→04/04	63 / 85										97011800		⊕ rear drum brake
										PRO		92092003	ø 240 x 10 x 42.7	⊕ rear disc brake
												94020300	ø 230,0 x 50.2	⊕ rear drum brake
722500														
1.8 16V	02/98→08/00	85 / 116	Ate		2306302	[+] 23063 17.3	⊖ ABS		Bos		2325803	[+] 23258 16.9	Bosch	
			Ate		2383201	[+] 23832 19.6	⊕ ABS		Luc		2341703	[+] 23417 15.2	Lucas	
			Ate	epad	2383281	[+] 23832 19.6	⊕ ABS		Luc		82060100			
					98023300	L720	⊕ on-board comp. ⊖ ABS		Luc		82063300			
					98029800	L750	⊕ 2383201 ⊖ elec. damp. susp.		Bos		82063700			
					98031400	L287	⊕ 2383201 ⊕ elec. damp. susp.			PRO	92092103	ø 264 x 10 x 42		
			Ate		82032000		⊕ ABS							
			Ate		82062900									
				PRO	92091803	ø 256 x 24 x 41	⊖ ABS							
				PRO	92091903	ø 280 x 25 x 42								
722600														
1.8 16V	09/00→05/05	92 / 125	Ate		2306302	[+] 23063 17.3	⊖ ABS →09/01		Bos		2325803	[+] 23258 16.9	Bosch	
			Ate		2383201	[+] 23832 19.6	⊕ ABS		Luc		2341703	[+] 23417 15.2	Lucas	
			Ate	epad	2383281	[+] 23832 19.6	⊕ ABS		Luc		82060100			
					98023300	L720	⊕ on-board comp. ⊖ ABS		Luc		82063300			
					98029800	L750	⊕ 2383201 ⊖ elec. damp. susp.		Bos		82063700			
					98031400	L287	⊕ 2383201 ⊕ elec. damp. susp.			PRO	92092103	ø 264 x 10 x 42		
			Ate		82032000		⊕ ABS							
			Ate		82062900									
				PRO	92091803	ø 256 x 24 x 41	⊖ ABS →09/01							
				PRO	92091903	ø 280 x 25 x 42	⊕ ABS							
722700														
1.8 16V Dualfuel	09/02→05/05	87 / 118	Ate		2383201	[+] 23832 19.6			Bos		2325803	[+] 23258 16.9	Bosch	
			Ate	epad	2383281	[+] 23832 19.6			Luc		2341703	[+] 23417 15.2	Lucas	
					98023300	L720	⊕ on-board comp.		Luc		82060100			
					98029800	L750	⊕ 2383201 ⊖ elec. damp. susp.		Luc		82063300			
					98031400	L287	⊕ 2383201 ⊕ elec. damp. susp.		Bos		82063700			
			Ate		82032000					PRO	92092103	ø 264 x 10 x 42		
			Ate		82062900									
				PRO	92091803	ø 256 x 24 x 41	⊖ ABS							
				PRO	92091903	ø 280 x 25 x 42	⊕ ABS							
722800														
2.0 16V	02/98→05/05	100 / 136	Ate		2383201	[+] 23832 19.6			Bos		2325803	[+] 23258 16.9	Bosch	
2.2 16V	03/01→05/05	108 / 147	Ate	epad	2383281	[+] 23832 19.6			Luc		2341703	[+] 23417 15.2	Lucas	
					98023300	L720	⊕ on-board comp.		Luc		82060100			
					98029800	L750	⊕ 2383201 ⊖ elec. damp. susp.		Luc		82063300			
					98031400	L287	⊕ 2383201 ⊕ elec. damp. susp.		Bos		82063700			
			Ate		82032000					PRO	92092103	ø 264 x 10 x 42		

T - Z

kW / hp

ASTRA Mk IV (G) Estate 02/98→05/05

		722800	Ate		82062900							
2.0 16V	02/98→05/05	100 / 136										
2.2 16V	03/01→05/05	108 / 147		PRO	92091903	ø 280 x 25 x 42						
		722900	Ate		2383201	[+] 23832 19.6		Bos		2325803	[+] 23258 16.9	Bosch
2.0 16V	10/99→05/05	118 / 160	Ate	epad	2383281	[+] 23832 19.6		Luc		2341703	[+] 23417 15.2	Lucas
					98023300	L720	⊕ on-board comp.	Luc		82060100		
					98029800	L750	⊕ 2383201 ⊖ elec. damp. susp.		PRO	92092103	ø 264 x 10 x 42	
					98031400	L287	⊕ 2383201 ⊕ elec. damp. susp.					
			Ate		82032000							
			Ate		82062900							
				PRO	92091903	ø 280 x 25 x 42						
		723000	Ate		2306302	[+] 23063 17.3	⊖ ABS →09/01	Bos		2325803	[+] 23258 16.9	Bosch
2.0 DI	03/98→04/04	60 / 82										
2.0 DTI 16V	03/98→04/04	74 / 101	Ate		2383201	[+] 23832 19.6	⊕ ABS	Luc		2341703	[+] 23417 15.2	Lucas
			Ate	epad	2383281	[+] 23832 19.6	⊕ ABS	Luc		82060100		
					98023300	L720	⊕ on-board comp. ⊖ ABS	Luc		82063300		
					98029800	L750	⊕ 2383201 ⊖ elec. damp. susp.	Bos		82063700		
					98031400	L287	⊕ 2383201 ⊕ elec. damp. susp.		PRO	92092103	ø 264 x 10 x 42	
			Ate		82032000		⊕ ABS					
			Ate		82062900							
				PRO	92091803	ø 256 x 24 x 41	⊖ ABS →09/01					
				PRO	92091903	ø 280 x 25 x 42						

ASTRA Mk IV (G) Hatchback 02/98→05/05

		723100	Ate		2306302	[+] 23063 17.3		Bos		2325803	[+] 23258 16.9	⊕ rear disc brake Bosch
1.2 16V	02/98→09/00	48 / 65			98023300	L720	⊕ on-board comp.	Luc		2341703	[+] 23417 15.2	⊕ rear disc brake Lucas
			Ate		82062900			Luc		82060100		
					92091700	ø 256 x 11 x 41		Luc		82063300		
								Bos		82063700		
										91044900	ø 200 x 45	⊕ rear drum brake
										97008300		⊕ rear drum brake
									PRO	92092003	ø 240 x 10 x 42.7	⊕ rear disc brake
										94008600	ø 200,0 x 52.5	⊕ rear drum brake
		723200	Ate		2306302	[+] 23063 17.3		Bos		2325803	[+] 23258 16.9	⊕ rear disc brake Bosch
1.2 16V	09/00→05/05	55 / 75			98023300	L720	⊕ on-board comp.	Luc		2341703	[+] 23417 15.2	⊕ rear disc brake Lucas
			Ate		82062900			Luc		82060100		
					92091700	ø 256 x 11 x 41	→09/01	Luc		82063300		
				PRO	92091803	ø 256 x 24 x 41	09/01→	Bos		82063700		
										91044900	ø 200 x 45	⊕ rear drum brake
										97008300		⊕ rear drum brake
									PRO	92092003	ø 240 x 10 x 42.7	⊕ rear disc brake
										94008600	ø 200,0 x 52.5	⊕ rear drum brake
		723300	Ate		2306302	[+] 23063 17.3		Bos		2325803	[+] 23258 16.9	⊕ rear disc brake Bosch
1.4 16V	02/98→05/05	66 / 90										
1.6	02/98→09/00	55 / 75										
1.6	09/00→05/05	62 / 84										

T - Z

ASTRA Mk IV (G) Hatchback 02/98→05/05

1.6 16V	02/98→05/05	74 / 101		98023300	L720	⊕ on-board comp.	Luc		2341703	[+] 23417 15.2	⊕ rear disc brake Lucas
1.7 CDTI 16V	04/03→05/05	59 / 80									
1.7 DTI 16V	02/00→05/05	55 / 75	Ate	82062900			Luc		82060100		
1.7 TD	02/98→08/00	50 / 68									
			PRO	92091803	ø 256 x 24 x 41		Luc		82063300		
							Bos		82063700		
							Luc		91049000	ø 230 x 42	⊕ rear drum brake →12999999, 15999999 →16999999, 18999999 →1G
									91060100	ø 230 x 42	⊕ rear drum brake 22000001, 25000001→ 26000001, 28000001→ 4G000001→
									97011800		⊕ rear drum brake
								PRO	92092003	ø 240 x 10 x 42.7	⊕ rear disc brake
									94020300	ø 230,0 x 50.2	⊕ rear drum brake
		723400	Ate	2306302	[+] 23063 17.3		Luc		2341702	[–] 23417 15.2	⊕ rear disc brake
1.6	12/02→05/05	76 / 103									
			Ate	82032000			Luc	epad	2341781	[–] 23417 15.2	⊕ rear disc brake
			PRO	92091803	ø 256 x 24 x 41		Bos		2325803	[+] 23258 16.9	⊕ rear disc brake
			PRO	92091903	ø 280 x 25 x 42	⊖ GSI, OPC			91060100	ø 230 x 42	⊕ rear drum brake
								PRO	92092003	ø 240 x 10 x 42.7	⊕ rear disc brake
								PRO	92092103	ø 264 x 10 x 42	⊕ rear disc brake
									94020300	ø 230,0 x 50.2	→32999999 →35999999 →36999999 →38999999 ⊕ rear drum brake
									94031500	ø 230 x 50	42000001→ 45000001→ 46000001→ 48000001→ 4G000001→ ⊕ rear drum brake
		723500	Ate	2306302	[+] 23063 17.3		Bos		2325803	[+] 23258 16.9	⊕ rear disc brake Bosch
1.6 Dualfuel	07/00→05/05	62 / 86									
1.6 Dualfuel	09/02→05/05	63 / 85		98023300	L720	⊕ on-board comp.	Luc		2341703	[+] 23417 15.2	⊕ rear disc brake Lucas
			Ate	82062900			Luc		82060100		
			PRO	92091803	ø 256 x 24 x 41		Luc		82063300		
							Bos		82063700		
							Luc		91049000	ø 230 x 42	⊕ rear drum brake →12999999, 15999999 →16999999, 18999999 →1G
									91060100	ø 230 x 42	⊕ rear drum brake 22000001, 25000001→ 26000001, 28000001→ 4G000001→
									97011800		⊕ rear drum brake
								PRO	92092003	ø 240 x 10 x 42.7	⊕ rear disc brake
		723600	Ate	2306302	[+] 23063 17.3	⊖ ABS	Bos		2325803	[+] 23258 16.9	Bosch
1.8 16V	02/98→09/00	85 / 116									
			Ate	2383201	[+] 23832 19.6	⊕ ABS	Luc		2341703	[+] 23417 15.2	Lucas
			Ate	2383281	[+] 23832 19.6	⊕ ABS	Luc		82060100		
				98023300	L720	⊖ ABS ⊕ on-board comp.	Luc		82063300		
				98029800	L750	⊕ 2383201 ⊖ elec. damp. susp.	Bos		82063700		
				98031400	L287	⊕ 2383201 ⊕ elec. damp. susp.		PRO	92092103	ø 264 x 10 x 42	
			Ate	82032000		⊕ ABS					
			Ate	82062900							
			PRO	92091803	ø 256 x 24 x 41	⊖ ABS					
			PRO	92091903	ø 280 x 25 x 42						
		723700	Ate	2306302	[+] 23063 17.3	⊖ ABS →09/01	Bos		2325803	[+] 23258 16.9	Bosch
1.8 16V	09/00→05/05	92 / 125									
2.0 DI	02/98→05/05	60 / 82									
2.0 DTI 16V	08/99→05/05	74 / 101									

T - Z

30 kW / hp

ASTRA Mk IV (G) Hatchback 02/98→05/05

1.8 16V	09/00→05/05	723700 92 / 125	Ate		2383201	[+] 23832 19.6	⊕ ABS	Luc		2341703	[+] 23417 15.2	Lucas
2.0 DI	02/98→05/05	60 / 82	Ate	epad	2383281	[+] 23832 19.6	⊕ ABS	Luc		82060100		
2.0 DTI 16V	08/99→05/05	74 / 101			98023300	L720	⊖ ABS ⊕ on-board comp.	Luc		82063300		
					98029800	L750	⊕ 2383201 ⊖ elec. damp. susp.	Bos		82063700		
					98031400	L287	⊕ 2383201 ⊕ elec. damp. susp.		PRO	92092103	ø 264 x 10 x 42	
			Ate		82032000		⊕ ABS					
			Ate		82062900							
				PRO	92091803	ø 256 x 24 x 41	⊖ ABS →09/01					
				PRO	92091903	ø 280 x 25 x 42						
1.8 16V Dualfuel	09/02→05/05	723800 87 / 118	Ate		2383201	[+] 23832 19.6		Bos		2325803	[+] 23258 16.9	Bosch
2.0	10/99→08/00	118 / 160	Ate	epad	2383281	[+] 23832 19.6		Luc		2341703	[+] 23417 15.2	Lucas
2.0 16V	02/98→05/05	100 / 136			98023300	L720	⊕ on-board comp.	Luc		82060100		
2.2 16V	03/01→05/05	108 / 147			98029800	L750	⊕ 2383201 ⊖ elec. damp. susp.	Luc		82063300		
					98031400	L287	⊕ 2383201 ⊕ elec. damp. susp.	Bos		82063700		
			Ate		82032000				PRO	92092103	ø 264 x 10 x 42	
			Ate		82062900							
				PRO	92091903	ø 280 x 25 x 42						
2.0 SRI Turbo	07/02→05/05	723900 141 / 192	Ate		2311701	[+] 23117 20.2		Bos		2325803	[+] 23258 16.9	Bosch
			Ate		82032000			Luc		2341703	[+] 23417 15.2	Lucas
			Ate		82062900			Luc		82060100		
				PRO	92110903	ø 308 x 25 x 42		Luc		82063300		
								Bos		82063700		
									PRO	92092103	ø 264 x 10 x 42	

ASTRA Mk IV (G) Kombi 02/98→05/05 → ASTRA Mk IV (G) Estate, Page 1150

ASTRA Mk IV (G) Saloon 02/98→05/05

1.2 16V	09/98→09/00	724000 48 / 65	Ate		2306302	[+] 23063 17.3		Bos		2325803	[+] 23258 16.9	⊕ rear disc brake Bosch
					98023300	L720	⊕ on-board comp.	Luc		2341703	[+] 23417 15.2	⊕ rear disc brake Lucas
			Ate		82062900			Luc		82060100		
					92091700	ø 256 x 11 x 41		Luc		82063300		
								Bos		82063700		
										91044900	ø 200 x 45	⊕ rear drum brake
										97008300		⊕ rear drum brake
									PRO	92092003	ø 240 x 10 x 42.7	⊕ rear disc brake
										94008600	ø 200,0 x 52.5	⊕ rear drum brake
1.2 16V	09/00→05/05	724100 55 / 75	Ate		2306302	[+] 23063 17.3		Bos		2325803	[+] 23258 16.9	⊕ rear disc brake Bosch
					98023300	L720	⊕ on-board comp.	Luc		2341703	[+] 23417 15.2	⊕ rear disc brake Lucas
			Ate		82062900			Luc		82060100		
					92091700	ø 256 x 11 x 41	→09/01	Luc		82063300		
				PRO	92091803	ø 256 x 24 x 41	09/01→	Bos		82063700		
										91044900	ø 200 x 45	⊕ rear drum brake

T - Z

kW / hp

ASTRA Mk IV (G) Saloon 02/98→05/05

		724100											
1.2 16V	09/00→05/05	55 / 75								97008300			⊕ rear drum brake
										92092003	ø 240 x 10 x 42.7		⊕ rear disc brake
										94008600	ø 200,0 x 52.5		⊕ rear drum brake
		724200	Ate		2306302	[+] 23063 17.3		Bos		2325803	[+] 23258 16.9		⊕ rear disc brake Bosch
1.4	05/98→05/05	44 / 60											
1.4 16V	09/98→05/05	66 / 90			98023300	L720	⊕ on-board comp.	Luc		2341703	[+] 23417 15.2		⊕ rear disc brake Lucas
1.6	09/98→09/00	55 / 75											
1.6	09/00→05/05	62 / 84											
1.6 16V	09/98→05/05	74 / 101	Ate		82062900			Luc		82060100			
1.6 Dualfuel	07/00→05/05	62 / 86											
1.6 Dualfuel	09/02→05/05	63 / 85											
1.7 CDTI 16V	04/03→05/05	59 / 80			92091803	ø 256 x 24 x 41		Luc		82063300			
1.7 DTI 16V	02/00→05/05	55 / 75						Bos		82063700			
1.7 TD	09/98→08/00	50 / 68											
								Luc		91049000	ø 230 x 42		⊕ rear drum brake →12999999, 15999999 →16999999, 18999999 →1G
										91060100	ø 230 x 42		⊕ rear drum brake 22000001, 25000001→ 26000001, 28000001→ 4G000001→
										97011800			⊕ rear drum brake
										92092003	ø 240 x 10 x 42.7		⊕ rear disc brake
										94020300	ø 230,0 x 50.2		⊕ rear drum brake
		724300	Ate		2306302	[+] 23063 17.3	⊖ ABS	Bos		2325803	[+] 23258 16.9		Bosch
1.8 16V	02/98→07/04	85 / 116											
			Ate		2383201	[+] 23832 19.6	⊕ ABS	Luc		2341703	[+] 23417 15.2		Lucas
			Ate	epad	2383281	[+] 23832 19.6	⊕ ABS	Luc		82060100			
					98023300	L720	⊕ on-board comp. ⊖ ABS	Luc		82063300			
					98029800	L750	⊕ 2383201 ⊖ elec. damp. susp.	Bos		82063700			
					98031400	L287	⊕ 2383201 ⊕ elec. damp. susp.			92092103	ø 264 x 10 x 42		
			Ate		82032000		⊕ ABS						
			Ate		82062900								
					92091803	ø 256 x 24 x 41	⊖ ABS						
					92091903	ø 280 x 25 x 42							
		724400	Ate		2306302	[+] 23063 17.3	⊖ ABS →09/01	Bos		2325803	[+] 23258 16.9		Bosch
1.8 16V	02/98→07/04	92 / 125											
2.0 DI	02/98→07/04	60 / 82	Ate		2383201	[+] 23832 19.6	⊕ ABS	Luc		2341703	[+] 23417 15.2		Lucas
			Ate	epad	2383281	[+] 23832 19.6	⊕ ABS	Luc		82060100			
					98023300	L720	⊕ on-board comp. ⊖ ABS	Luc		82063300			
					98029800	L750	⊕ 2383201 ⊖ elec. damp. susp.	Bos		82063700			
					98031400	L287	⊕ 2383201 ⊕ elec. damp. susp.			92092103	ø 264 x 10 x 42		
			Ate		82032000		⊕ ABS						
			Ate		82062900								
					92091803	ø 256 x 24 x 41	⊖ ABS →09/01						
					92091903	ø 280 x 25 x 42							
		724500	Ate		2383201	[+] 23832 19.6		Bos		2325803	[+] 23258 16.9		Bosch
1.8 16V Dualfuel	02/98→07/04	87 / 118											
2.0 16V	09/98→05/05	100 / 136	Ate	epad	2383281	[+] 23832 19.6		Luc		2341703	[+] 23417 15.2		Lucas
2.2 16V	03/01→05/05	108 / 147											
					98023300	L720	⊕ on-board comp.	Luc		82060100			
					98029800	L750	⊕ 2383201 ⊖ elec. damp. susp.	Luc		82063300			
					98031400	L287	⊕ 2383201 ⊕ elec. damp. susp.	Bos		82063700			
			Ate		82032000					92092103	ø 264 x 10 x 42		

T - Z

kW / hp

ASTRA Mk IV (G) Saloon 02/98→05/05

724500												
1.8 16V Dualfuel	02/98→07/04	87 / 118	Ate		82062900							
2.0 16V	09/98→05/05	100 / 136		PRO	92091903	ø 280 x 25 x 42						
2.2 16V	03/01→05/05	108 / 147										
724600			Ate		2383201	[+] 23832 19.6		Bos		2325803	[+] 23258 16.9	⊕ rear disc brake Bosch
2.0 16V	10/99→05/05	118 / 160	Ate	epad	2383281	[+] 23832 19.6		Luc		2341703	[+] 23417 15.2	⊕ rear disc brake Lucas
					98023300	L720	⊕ on-board comp.	Luc		82060100		⊕ rear disc brake
					98029800	L750	⊕ 2383201 ⊖ elec. damp. susp.			91044900	ø 200 x 45	⊕ rear drum brake
					98031400	L287	⊕ 2383201 ⊕ elec. damp. susp.		PRO	92092103	ø 264 x 10 x 42	⊕ rear disc brake
			Ate		82032000					94031500	ø 230 x 50	⊕ rear drum brake
			Ate		82062900							
				PRO	92091903	ø 280 x 25 x 42						
724700			Ate		2306302	[+] 23063 17.3	⊖ ABS →09/01	Bos		2325803	[+] 23258 16.9	⊕ rear disc brake Bosch
2.0 DTI 16V	02/98→07/04	74 / 101	Ate		2383201	[+] 23832 19.6	⊕ ABS	Luc		2341703	[+] 23417 15.2	⊕ rear disc brake Lucas
			Ate	epad	2383281	[+] 23832 19.6	⊕ ABS	Luc		82060100		⊕ rear disc brake
					98023300	L720	⊕ on-board comp. ⊖ ABS	Luc		82063300		⊕ rear disc brake
					98029800	L750	⊕ 2383201 ⊖ elec. damp. susp.	Bos		82063700		⊕ rear disc brake
					98031400	L287	⊕ 2383201 ⊕ elec. damp. susp.			91060100	ø 230 x 42	⊕ rear drum brake
			Ate		82032000		⊕ ABS		PRO	92092103	ø 264 x 10 x 42	⊕ rear disc brake
			Ate		82062900					94031500	ø 230 x 50	⊕ rear drum brake
				PRO	92091803	ø 256 x 24 x 41	⊖ ABS →09/01					
				PRO	92091903	ø 280 x 25 x 42						
724800			Ate		2383201	[+] 23832 19.6		Bos		2325803	[+] 23258 16.9	⊕ rear disc brake Bosch
2.2 DTI	09/02→05/05	92 / 125	Ate	epad	2383281	[+] 23832 19.6		Luc		2341703	[+] 23417 15.2	⊕ rear disc brake Lucas
					98029800	L750	⊖ elec. damp. susp.	Luc		82060100		⊕ rear disc brake
					98031400	L287	⊕ elec. damp. susp.	Luc		82063300		⊕ rear disc brake
			Ate		82032000			Bos		82063700		⊕ rear disc brake
			Ate		82062900					91044900	ø 200 x 45	⊕ rear drum brake
				PRO	92091903	ø 280 x 25 x 42			PRO	92092103	ø 264 x 10 x 42	⊕ rear disc brake
					TPM0007					TPM0008		
										94020300	ø 230,0 x 50.2	⊕ rear drum brake

ASTRA Mk IV (G) Schrägheck 02/98→05/05 → ASTRA Mk IV (G) Hatchback, Page 1153

ASTRA Mk IV (G) Stufenheck 02/98→05/05 → ASTRA Mk IV (G) Saloon, Page 1155

ASTRA Mk V (H) Estate 03/04→10/10

724900			Ate		2383201	[+] 23832 19.6		Luc		2341702	[–] 23417 15.2	⊕ rear disc brake
1.3 CDTi	08/04→03/09	66 / 90	Ate	epad	2383281	[+] 23832 19.6		Luc	epad	2341781	[–] 23417 15.2	⊕ rear disc brake
1.4	08/04→03/09	66 / 90			98031400	L287		Luc		82060100		
1.4	08/04→10/10	55 / 75	Ate		82032000			Luc		82063300		
1.6	08/04→03/09	77 / 105	Ate		82062900					91060100	ø 230 x 42	⊕ rear drum brake
1.6	08/04→03/09	85 / 115		PRO	92091903	ø 280 x 25 x 42	⊕ rim 5 hole		PRO	92092003	ø 240 x 10 x 42.7	⊕ rear disc brake
1.7 CDTi	08/04→03/09	74 / 100		PRO	92129303	ø 280 x 25 x 43.2	⊕ rim 4 hole		PRO	92092103	ø 264 x 10 x 42	⊕ rim 5 hole ⊕ rear disc brake
1.7 CDTi	08/04→03/09	81 / 110			TPM0007					TPM0008		
1.7 TD	08/04→03/09	79 / 108								94031500	ø 230 x 50	⊕ rear drum brake
1.8	10/04→03/09	92 / 125										
1.8	10/04→03/09	103 / 140										

T - Z

		kW / hp										
ASTRA Mk V (H) Estate 03/04→10/10												
		725000	Ate		**2383201**	[+] 23832 19.6		Luc		**2341702**	[–] 23417 15.2	⊕ rear disc brake
1.6	08/04→03/09	132 / 180										
1.9 CDTi	08/04→03/09	74 / 100	Ate		**2383281**	[+] 23832 19.6		Luc		**2341781**	[–] 23417 15.2	⊕ rear disc brake
1.9 CDTi	08/04→03/09	88 / 120										
1.9 CDTi	08/04→03/09	110 / 150			**98031400**	L287		Luc		**82060100**		
			Ate		**82032000**			Luc		**82063300**		
			Ate		**82062900**					**91060100**	ø 230 x 42	⊕ rear drum brake
				PRO	**92110903**	ø 308 x 25 x 42	⊕ rim 5 hole		PRO	**92092003**	ø 240 x 10 x 42.7	⊕ rear disc brake
				PRO	**92129303**	ø 280 x 25 x 43.2	⊕ rim 4 hole		PRO	**92092103**	ø 264 x 10 x 42	⊕ rim 5 hole ⊕ rear disc brake
					TPM0007					**TPM0008**		
										94031500	ø 230 x 50	⊕ rear drum brake
		725100	Ate		**2373807**	[0] 23738 20.6	⊕ OPC,VXR	Luc		**2341702**	[–] 23417 15.2	⊕ rear disc brake
1.7 CDTI	03/04→05/09	59 / 80	Ate		**2383201**	[+] 23832 19.6	⊖ OPC,VXR	Luc		**2341781**	[–] 23417 15.2	⊕ rear disc brake
			Ate		**2383281**	[+] 23832 19.6	⊖ OPC,VXR			**91060100**	ø 230 x 42	
			Ate		**82032000**				PRO	**92092003**	ø 240 x 10 x 42.7	⊕ rim 4 hole ⊕ rear disc brake
				PRO	**92110903**	ø 308 x 25 x 42	⊕ rim 5 hole		PRO	**92092103**	ø 264 x 10 x 42	⊕ rim 5 hole ⊕ rear disc brake ⊖ OPC,VXR
					TPM0007		⊕ rim 5 hole		PRO	**92167603**	ø 278 x 10 x 42	⊕ OPC,VXR ⊕ rear disc brake
										94031500	ø 230 x 50	⊕ rear drum brake
		725200	Ate		**2383201**	[+] 23832 19.6		Luc		**2341702**	[–] 23417 15.2	
1.7 CDTI	02/07→10/10	92 / 125	Ate		**2383281**	[+] 23832 19.6		Luc		**2341781**	[–] 23417 15.2	
			Ate		**82032000**					**TPM0008**		
				PRO	**92110903**	ø 308 x 25 x 42						
					TPM0007							
		725300	Ate		**2383201**	[+] 23832 19.6		Luc		**2341702**	[–] 23417 15.2	
2.0 Turbo	08/04→10/10	125 / 170	Ate		**2383281**	[+] 23832 19.6		Luc		**2341781**	[–] 23417 15.2	
2.0 Turbo	08/04→10/10	147 / 200			**98031400**	L287		Luc		**82060100**		
			Ate		**82032000**			Luc		**82063300**		
			Ate		**82062900**				PRO	**92092103**	ø 264 x 10 x 42	
				PRO	**92110903**	ø 308 x 25 x 42				**TPM0008**		
					TPM0007							
ASTRA Mk V (H) Hatchback 01/04→09/09												
		725400	Ate		**2383201**	[+] 23832 19.6		Luc		**2341702**	[–] 23417 15.2	⊕ rear disc brake
1.3 CDTI	01/04→05/09	66 / 90										
1.4	01/04→05/09	66 / 90	Ate		**2383281**	[+] 23832 19.6		Luc		**2341781**	[–] 23417 15.2	⊕ rear disc brake
1.4	04/04→12/05	55 / 75										
1.6	01/04→05/09	77 / 105			**98031400**	L287		Luc		**82060100**		
1.6	01/04→05/09	85 / 115										
1.7 CDTi	01/04→05/09	81 / 110										
1.7 CDTI	01/04→05/09	59 / 80	Ate		**82032000**			Luc		**82063300**		
1.7 CDTI	01/04→05/09	74 / 100										
1.7 TD	01/04→05/09	79 / 108	Ate		**82062900**					**91060100**	ø 230 x 42	⊕ rear drum brake
1.8	01/04→05/09	92 / 125										
1.8	01/04→05/09	103 / 140		PRO	**92091903**	ø 280 x 25 x 42	⊕ rim 5 hole		PRO	**92092003**	ø 240 x 10 x 42.7	⊕ rear disc brake
				PRO	**92129303**	ø 280 x 25 x 43.2	⊕ rim 4 hole		PRO	**92092103**	ø 264 x 10 x 42	⊕ rim 5 hole ⊕ rear disc brake
					TPM0007					**TPM0008**		
										94031500	ø 230 x 50	⊕ rear drum brake
		725500	Ate		**2373807**	[0] 23738 20.6	⊕ OPC,VXR	Luc		**2341702**	[–] 23417 15.2	⊕ rear disc brake
1.6 Turbo	09/06→	132 / 180	Ate		**2383201**	[+] 23832 19.6	⊖ OPC,VXR	Luc		**2341781**	[–] 23417 15.2	⊕ rear disc brake

T - Z

ASTRA Mk V (H) Hatchback 01/04→09/09

		kW / hp											
1.6 Turbo	09/06→	725500 132 / 180	Ate	epad	2383281	[+] 23832 19.6	⊖ OPC,VXR			91060100	ø 230 x 42	
			Ate		82032000				PRO	92092003	ø 240 x 10 x 42.7	⊕ rim 4 hole ⊕ rear disc brake
				PRO	92110903	ø 308 x 25 x 42	⊕ rim 5 hole		PRO	92092103	ø 264 x 10 x 42	⊕ rim 5 hole ⊕ rear disc brake ⊖ OPC,VXR
				PRO	92129303	ø 280 x 25 x 43.2	⊕ rim 4 hole		PRO	92167603	ø 278 x 10 x 42	⊕ OPC,VXR ⊕ rear disc brake
					TPM0007		⊕ rim 5 hole			94031500	ø 230 x 50	⊕ rear drum brake
1.7 CDTI	02/07→09/09	725600 92 / 125	Ate	epad	2383201	[+] 23832 19.6		Luc		2341702	[–] 23417 15.2	⊕ rear disc brake
			Ate	epad	2383281	[+] 23832 19.6		Luc	epad	2341781	[–] 23417 15.2	⊕ rear disc brake
			Ate		82032000					91060100	ø 230 x 42	⊕ rear drum brake
				PRO	92110903	ø 308 x 25 x 42			PRO	92092003	ø 240 x 10 x 42.7	⊕ rear disc brake
					TPM0007				PRO	92124703	ø 264 x 10 x 42	⊕ rear disc brake
										TPM0008		
										94031500	ø 230 x 50	⊕ rear drum brake
1.9 CDTI	01/04→05/09	725700 88 / 120	Ate	epad	2383201	[+] 23832 19.6		Luc		2341702	[–] 23417 15.2	⊕ rear disc brake
1.9 CDTI	01/04→05/09	110 / 150										
1.9 CDTI 16V	01/04→05/09	88 / 120	Ate	epad	2383281	[+] 23832 19.6		Luc	epad	2341781	[–] 23417 15.2	⊕ rear disc brake
					98031400	L287		Luc		82060100		
			Ate		82032000			Luc		82063300		
			Ate		82062900					91060100	ø 230 x 42	⊕ rear drum brake
				PRO	92110903	ø 308 x 25 x 42	⊕ rim 5 hole		PRO	92092003	ø 240 x 10 x 42.7	⊕ rear disc brake
				PRO	92129303	ø 280 x 25 x 43.2	⊕ rim 4 hole		PRO	92092103	ø 264 x 10 x 42	⊕ rim 5 hole ⊕ rear disc brake
					TPM0007					TPM0008		
										94031500	ø 230 x 50	⊕ rear drum brake
2.0 Turbo	01/04→05/09	725800 125 / 170	Ate	epad	2383201	[+] 23832 19.6		Luc		2341702	[–] 23417 15.2	⊕ rear disc brake
			Ate	epad	2383281	[+] 23832 19.6		Luc	epad	2341781	[–] 23417 15.2	⊕ rear disc brake
					98031400	L287		Luc		82060100		⊕ rear disc brake
			Ate		82032000			Luc		82063300		⊕ rear disc brake
			Ate		82062900					91060100	ø 230 x 42	⊕ rear drum brake
				PRO	92110903	ø 308 x 25 x 42			PRO	92092003	ø 240 x 10 x 42.7	⊕ rear disc brake
					TPM0007				PRO	92092103	ø 264 x 10 x 42	⊕ rear disc brake
										TPM0008		
										94031500	ø 230 x 50	⊕ rear drum brake
2.0 Turbo	01/04→05/09	725900 147 / 200	Ate	epad	2383201	[+] 23832 19.6		Luc		2341702	[–] 23417 15.2	
			Ate	epad	2383281	[+] 23832 19.6		Luc	epad	2341781	[–] 23417 15.2	
					98031400	L287		Luc		82060100		
			Ate		82032000			Luc		82063300		
			Ate		82062900				PRO	92092103	ø 264 x 10 x 42	
				PRO	92110903	ø 308 x 25 x 42				TPM0008		
					TPM0007							
2.0 Turbo	01/04→05/09	726000 177 / 240	Ate		2373807	[o] 23738 20.6		Luc		2341702	[–] 23417 15.2	
					98031400	L287		Luc	epad	2341781	[–] 23417 15.2	
			Ate		82062900			Luc		82060100		

T - Z

		kW / hp										
ASTRA Mk V (H) Hatchback 01/04→09/09												
		726000							Luc			
2.0 Turbo	01/04→05/09	177 / 240		92149803	ø 321 x 28 x 44			82063300				
				TPM0007				92167600	ø 278 x 10 x 42			
								92167603	ø 278 x 10 x 42			
								TPM0008				
ASTRA Mk V (H) Kombi 03/04→10/10 → ASTRA Mk V (H) Estate, Page 1157												
ASTRA Mk V (H) Schrägheck 01/04→09/09 → ASTRA Mk V (H) Hatchback, Page 1158												
ASTRA Mk V (H) Sport Hatch 02/05→11/10												
		726100	Ate	2383201	[+] 23832 19.6			2341702	[–] 23417 15.2	⊕ rear disc brake		
1.3 CDTi	04/05→11/10	66 / 90										
1.4	02/05→11/10	55 / 75	Ate	2383281	[+] 23832 19.6			2341781	[–] 23417 15.2	⊕ rear disc brake		
1.4 i 16V	03/05→11/10	66 / 90										
1.6	02/05→11/10	77 / 105		98031400	L287			82060100				
1.6	10/06→11/10	132 / 179										
1.6 i 16V	12/06→11/10	85 / 116	Ate	82032000				82063300				
1.7 CDTi	02/05→11/10	74 / 100										
1.7 CDTi	02/07→11/10	81 / 110	Ate	82062900				91060100	ø 230 x 42	⊕ rear drum brake		
1.8	02/05→11/10	92 / 125										
1.8 i 16V	03/07→11/10	103 / 140		92091903	ø 280 x 25 x 42	⊕ rim 5 hole		92092003	ø 240 x 10 x 42.7	⊕ rear disc brake		
				92129303	ø 280 x 25 x 43.2	⊕ rim 4 hole		92092103	ø 264 x 10 x 42	⊕ rim 5 hole ⊕ rear disc brake		
				TPM0007				TPM0008				
								94031500	ø 230 x 50	⊕ rear drum brake		
		726200	Ate	2373807	[o] 23738 20.6	⊕ OPC,VXR		2341702	[–] 23417 15.2	⊕ rear disc brake		
1.7 CDTI	02/07→	92 / 125										
			Ate	2383201	[+] 23832 19.6	⊖ OPC,VXR		2341781	[–] 23417 15.2	⊕ rear disc brake		
			Ate	2383281	[+] 23832 19.6	⊖ OPC,VXR		91060100	ø 230 x 42			
			Ate	82032000				92092003	ø 240 x 10 x 42.7	⊕ rim 4 hole ⊕ rear disc brake		
				92110903	ø 308 x 25 x 42	⊕ rim 5 hole		92092103	ø 264 x 10 x 42	⊕ rim 5 hole ⊕ rear disc brake ⊖ OPC,VXR		
				92129303	ø 280 x 25 x 43.2	⊕ rim 4 hole		92167603	ø 278 x 10 x 42	⊕ OPC,VXR ⊕ rear disc brake		
				TPM0007		⊕ rim 5 hole		94031500	ø 230 x 50	⊕ rear drum brake		
		726300	Ate	2383201	[+] 23832 19.6			2341702	[–] 23417 15.2	⊕ rear disc brake		
1.9 CDTi	02/05→11/10	88 / 120										
1.9 CDTi	02/05→11/10	110 / 150	Ate	2383281	[+] 23832 19.6			2341781	[–] 23417 15.2	⊕ rear disc brake		
1.9 CDTi	08/05→11/10	74 / 101		98031400	L287			82060100				
			Ate	82032000				82063300				
			Ate	82062900				91060100	ø 230 x 42	⊕ rear drum brake		
				92110903	ø 308 x 25 x 42	⊕ rim 5 hole		92092003	ø 240 x 10 x 42.7	⊕ rear disc brake		
				92129303	ø 280 x 25 x 43.2	⊕ rim 4 hole		92092103	ø 264 x 10 x 42	⊕ rim 5 hole ⊕ rear disc brake		
				TPM0007				TPM0008				
								94031500	ø 230 x 50	⊕ rear drum brake		
		726400	Ate	2383201	[+] 23832 19.6			2341702	[–] 23417 15.2			
2.0 Turbo	02/05→11/10	125 / 170	Ate	2383281	[+] 23832 19.6			2341781	[–] 23417 15.2			
				98031400	L287			82060100				
			Ate	82032000				82063300				
			Ate	82062900				92092103	ø 264 x 10 x 42			
				92110903	ø 308 x 25 x 42			TPM0008				
				TPM0007								
		726500	Ate	2373807	[o] 23738 20.6			2341702	[–] 23417 15.2			
2.0 VXR	02/09→11/10	176 / 240		98031400	L287			2341781	[–] 23417 15.2			

		kW / hp											
ASTRA Mk V (H) Sport Hatch 02/05→11/10													
		726500	Ate		82062900			Luc		82060100		
2.0 VXR	02/09→11/10	176 / 240		PRO	92149803	ø 321 x 28 x 44		Luc		82063300		
					TPM0007					92167600	ø 278 x 10 x 42	
									PRO	92167603	ø 278 x 10 x 42	
										TPM0008		
ASTRA Mk VI (J) 12/09→													
		726600			2503101	[+] 25031 18.8	15" -brake			2509601	[+] 25096 16.2	15" -brake
1.3 CDTI	12/09→	70 / 95										
1.4	12/09→	64 / 87			2503181	[+] 25031 18.8	15" -brake			2509602	[+] 25096 16.2	16" -brake
1.4	12/09→	74 / 100		epad								
1.4 Turbo	12/09→	103 / 140			2503401	[+] 25034 18.8	16" -brake		epad	2509681	[+] 25096 16.2	15" -brake
1.4 Turbo	08/11→	88 / 120										
1.6	12/09→	85 / 115			2503481	[+] 25034 18.8	16" -brake			82513400		
1.6 CDTi	11/13→	81 / 110		epad								
1.6 CDTi	11/13→	100 / 136							PRO	92205503	ø 268 x 12 x 45.1	15" -brake
1.6 SIDI	12/12→	125 / 170	Man		82505200							
1.6 Turbo	12/09→	132 / 180							PRO	92205703	ø 292 x 12 x 44.9	16" -brake
1.7 CDTi	12/09→	81 / 110		PRO	92198903	ø 276 x 26 x 45.5	15" -brake					
1.7 CDTi	12/09→	92 / 125										
1.7 CDTi	06/11→	96 / 131		PRO	92205603	ø 300 x 26 x 45.5	16" -brake					
1.7 CDTi	12/09→	74 / 101										
2.0 BiTurbo CDTI	12/12→	143 / 194										
2.0 CDTi	12/09→	118 / 160										
2.0 CDTi	08/11→	121 / 165										
ASTRA Mk VI (J) Saloon 06/12→													
		726700			2503101	[+] 25031 18.8	15" -brake			2509601	[+] 25096 16.2	15" -brake
1.3 CDTI	06/12→	70 / 95										
1.4	06/12→	74 / 101			2503181	[+] 25031 18.8	15" -brake			2509602	[+] 25096 16.2	16" -brake
1.4 Turbo	06/12→	103 / 140		epad								
1.6	06/12→	85 / 116			2503401	[+] 25034 18.8	16" -brake		epad	2509681	[+] 25096 16.2	15" -brake
1.6 SIDI	12/12→	125 / 170										
1.6 Turbo	06/12→	132 / 180			2503481	[+] 25034 18.8	16" -brake			82513400		
1.7 CDTI	06/12→	81 / 110		epad								
1.7 CDTI	06/12→	96 / 131							PRO	92205503	ø 268 x 12 x 45.1	15" -brake
2.0 BiTurbo CDTI	12/12→	143 / 194	Man		82505200							
				PRO	92198903	ø 276 x 26 x 45.5	15" -brake		PRO	92205703	ø 292 x 12 x 44.9	16" -brake
				PRO	92205603	ø 300 x 26 x 45.5	16" -brake					
ASTRA Mk VI (J) Sports Tourer 10/10→													
		726800			2503101	[+] 25031 18.8	15" -brake			2509601	[+] 25096 16.2	15" -brake
1.3 CDTi	10/10→	70 / 95										
1.4	10/10→	74 / 101			2503181	[+] 25031 18.8	15" -brake			2509602	[+] 25096 16.2	16" -brake
1.4 Turbo	10/10→	88 / 120		epad								
1.4 Turbo	10/10→	103 / 140			2503401	[+] 25034 18.8	16" -brake		epad	2509681	[+] 25096 16.2	15" -brake
1.6	10/10→	85 / 116										
1.6 SIDI	12/12→	125 / 170			2503481	[+] 25034 18.8	16" -brake			82513400		
1.6 Turbo	10/10→	132 / 180		epad								
1.7 CDTi	10/10→	81 / 110							PRO	92205503	ø 268 x 12 x 45.1	15" -brake
1.7 CDTi	10/10→	92 / 125	Man		82505200							
1.7 CDTi	06/11→	96 / 131							PRO	92205703	ø 292 x 12 x 44.9	16" -brake
1.7 CDTi	10/10→	74 / 101		PRO	92198903	ø 276 x 26 x 45.5	15" -brake					
2.0 BiTurbo CDTI	12/12→	143 / 194										
2.0 CDTi	10/10→	118 / 160		PRO	92205603	ø 300 x 26 x 45.5	16" -brake					
2.0 CDTi	08/11→	121 / 165										
		726900	Bre		2332502	[+] 23325 16	18" -brake			2509601	[+] 25096 16.2	15" -brake
1.6 CDTi	01/14→	81 / 110										
1.6 CDTi	01/14→	100 / 136	Man		2441201	[+] 24412 19.1	17" -brake			2509602	[+] 25096 16.2	16" -brake
					2503101	[+] 25031 18.8	15" -brake		epad	2509681	[+] 25096 16.2	15" -brake
				epad	2503181	[+] 25031 18.8	15" -brake					
					2503401	[+] 25034 18.8	16" -brake		PRO	92205503	ø 268 x 12 x 45.1	15" -brake
				epad	2503481	[+] 25034 18.8	16" -brake		PRO	92205703	ø 292 x 12 x 44.9	16" -brake →A8049708, AG057579
				PRO	92198903	ø 276 x 26 x 45.5	15" -brake					
				PRO	92205603	ø 300 x 26 x 45.5	16" -brake					
				PRO	92256803	ø 321 x 30 x 45.6	17" -brake					
ASTRA Mk VI (J) Stufenheck 06/12→ → ASTRA Mk VI (J) Saloon, Page 1161													
ASTRA TwinTop Mk V (H) 09/05→11/10													
		727000	Ate		2383201	[+] 23832 19.6		Luc		2341702	[–] 23417 15.2	⊕ rear disc brake
1.6	09/05→11/10	77 / 105										
1.6	10/06→11/10	132 / 179										
1.6 i 16V	10/06→11/10	85 / 116										

		kW / hp										
ASTRA TwinTop Mk V (H) 09/05→11/10												
1.8	05/08→11/10	103 / 140	Ate	2383281	[+] 23832 19.6		Luc	2341781	[–] 23417 15.2	⊕ rear disc brake		
				98031400	L287		Luc	82060100				
			Ate	82032000			Luc	82063300				
			Ate	82062900				91060100	ø 230 x 42	⊕ rear drum brake		
				92091903	ø 280 x 25 x 42	⊕ rim 5 hole		92092003	ø 240 x 10 x 42.7	⊕ rear disc brake		
				92129303	ø 280 x 25 x 43.2	⊕ rim 4 hole		92092103	ø 264 x 10 x 42	⊕ rim 5 hole ⊕ rear disc brake		
								94031500	ø 230 x 50	⊕ rear drum brake		
		727100	Ate	2373807	[o] 23738 20.6	⊕ OPC,VXR	Luc	2341702	[–] 23417 15.2	⊕ rear disc brake		
1.8	09/05→11/10	92 / 125	Ate	2383201	[+] 23832 19.6	⊖ OPC,VXR	Luc	2341781	[–] 23417 15.2	⊕ rear disc brake		
			Ate	2383281	[+] 23832 19.6	⊖ OPC,VXR		91060100	ø 230 x 42			
			Ate	82032000				92092103	ø 264 x 10 x 42	⊕ rim 5 hole ⊕ rear disc brake ⊖ OPC,VXR		
				92110903	ø 308 x 25 x 42	⊕ rim 5 hole		92124703	ø 264 x 10 x 42	⊕ rim 4 hole ⊕ rear disc brake		
				TPM0007		⊕ rim 5 hole		92167603	ø 278 x 10 x 42	⊕ OPC,VXR ⊕ rear disc brake		
								94031500	ø 230 x 50	⊕ rear drum brake		
		727200	Ate	2383201	[+] 23832 19.6		Luc	2341702	[–] 23417 15.2	⊕ rear disc brake		
1.9 CDTi	01/06→11/10	110 / 150	Ate	2383281	[+] 23832 19.6		Luc	2341781	[–] 23417 15.2	⊕ rear disc brake		
				98031400	L287		Luc	82060100				
			Ate	82032000			Luc	82063300				
			Ate	82062900				91060100	ø 230 x 42	⊕ rear drum brake		
				92110903	ø 308 x 25 x 42			92092003	ø 240 x 10 x 42.7	⊕ rear disc brake		
				92129303	ø 280 x 25 x 43.2	⊕ rim 4 hole		92092103	ø 264 x 10 x 42	⊕ rim 5 hole ⊕ rear disc brake		
								94031500	ø 230 x 50	⊕ rear drum brake		
		727300	Ate	2383201	[+] 23832 19.6		Luc	2341702	[–] 23417 15.2			
2.0	02/06→11/10	125 / 170	Ate	2383281	[+] 23832 19.6		Luc	2341781	[–] 23417 15.2			
2.0 Turbo	01/06→11/10	147 / 200		98031400	L287		Luc	82060100				
			Ate	82032000			Luc	82063300				
			Ate	82062900				92092103	ø 264 x 10 x 42			
				92110903	ø 308 x 25 x 42			TPM0008				
				TPM0007								
ASTRAVAN Mk IV (G) 08/98→08/06												
		727400	Ate	2306302	[+] 23063 17.3		Bos	2325803	[+] 23258 16.9	⊕ rear disc brake Bosch		
1.6 i	08/98→09/00	55 / 75		98023300	L720	⊕ on-board comp.	Luc	2341703	[+] 23417 15.2	⊕ rear disc brake Lucas		
1.6 i	09/00→08/06	62 / 84	Ate	82062900			Luc	82060100				
				92091803	ø 256 x 24 x 41		Luc	82063300				
							Bos	82063700				
							Luc	91049000	ø 230 x 42	⊕ rear drum brake →12999999, 15999999 →16999999, 18999999 →1G		
								91060100	ø 230 x 42	⊕ rear drum brake 22000001, 25000001→ 26000001, 28000001→ 4G000001→		
								97011800		⊕ rear drum brake		
								94020300	ø 230,0 x 50.2	⊕ rear drum brake		

T - Z

ASTRAVAN Mk IV (G) 08/98→08/06

		kW / hp												
		727500	Ate		2306302	[+] 23063 17.3	⊖ reinf.brake	Bos		2325803	[+] 23258 16.9	Bosch
1.7 CDTI	04/04→08/06	59 / 80										
1.7 DTI 16V	04/01→08/06	55 / 75	Ate		2383201	[+] 23832 19.6	⊕ reinf.brake	Luc		2341703	[+] 23417 15.2	Lucas
1.7 TD	08/98→08/06	50 / 68										
			Ate		2383281	[+] 23832 19.6	⊕ reinf.brake	Luc		82060100		
					98023300	L720	⊕ on-board comp. ⊖ reinf.brake	Luc		82063300		
					98029800	L750	⊕ 2383201 ⊖ elec. damp. susp.	Bos		82063700		
					98031400	L287	⊕ 2383201 ⊕ elec. damp. susp.		PRO	92092103	ø 264 x 10 x 42	
				PRO	92091803	ø 256 x 24 x 41	⊖ reinf.brake					
				PRO	92091903	ø 280 x 25 x 42	⊕ reinf.brake					
		727600	Ate		2306302	[+] 23063 17.3	→09/01	Bos		2325803	[+] 23258 16.9	Bosch
2.0 DI	08/98→08/06	60 / 82										
			Ate		2383201	[+] 23832 19.6	⊕ ABS →09/01 09/01→	Luc		2341703	[+] 23417 15.2	Lucas
			Ate		2383281	[+] 23832 19.6	⊕ ABS →09/01 09/01→	Luc		82060100		
					98023300	L720	⊕ on-board comp. →09/01	Luc		82063300		
					98029800	L750	⊕ 2383201 ⊖ elec. damp. susp.	Bos		82063700		
					98031400	L287	⊕ 2383201 ⊕ elec. damp. susp.		PRO	92092103	ø 264 x 10 x 42	⊕ ABS →09/01 09/01→
			Ate		82032000		⊕ ABS →09/01 09/01→					
			Ate		82062900							
				PRO	92091803	ø 256 x 24 x 41	→09/01					
				PRO	92091903	ø 280 x 25 x 42	⊕ ABS →09/01 09/01→					
		727700	Ate		2383201	[+] 23832 19.6		Bos		2325803	[+] 23258 16.9	Bosch
2.0 DTI	04/04→08/06	74 / 100										
			Ate		2383281	[+] 23832 19.6		Luc		2341703	[+] 23417 15.2	Lucas
					98023300	L720	⊕ on-board comp.	Luc		82060100		
					98029800	L750	⊕ 2383201 ⊖ elec. damp. susp.	Luc		82063300		
					98031400	L287	⊕ 2383201 ⊕ elec. damp. susp.	Bos		82063700		
				PRO	92091903	ø 280 x 25 x 42			PRO	92092103	ø 264 x 10 x 42	

ASTRAVAN Mk V (H) 03/05→11/11

		727800	Ate		2383201	[+] 23832 19.6		Luc		2341702	[–] 23417 15.2	⊕ rear disc brake
1.3 CDTi	08/05→	66 / 90										
1.4 i	03/05→	66 / 90	Ate		2383281	[+] 23832 19.6		Luc		2341781	[–] 23417 15.2	⊕ rear disc brake
1.6	03/05→	76 / 103										
1.7 CDTi	03/05→07/06	59 / 80										
			Ate		82032000			Luc		82060100		
			Ate		82062900			Luc		82063300		
				PRO	92091903	ø 280 x 25 x 42	⊕ rim 5 hole			91060100	ø 230 x 42	⊕ rear drum brake
				PRO	92129303	ø 280 x 25 x 43.2	⊕ rim 4 hole		PRO	92092003	ø 240 x 10 x 42.7	⊕ rear disc brake
									PRO	92092103	ø 264 x 10 x 42	⊕ rim 5 hole ⊕ rear disc brake
										94031500	ø 230 x 50	⊕ rear drum brake
		727900	Ate		2383201	[+] 23832 19.6		Luc		2341702	[–] 23417 15.2	⊕ rear disc brake
1.7 CDTi	11/11→	81 / 110										
			Ate		2383281	[+] 23832 19.6		Luc		2341781	[–] 23417 15.2	⊕ rear disc brake
					98031400	L287		Luc		82060100		
			Ate		82032000			Luc		82063300		
			Ate		82062900					91060100	ø 230 x 42	⊕ rear drum brake
				PRO	92091903	ø 280 x 25 x 42	⊕ rim 5 hole		PRO	92092003	ø 240 x 10 x 42.7	⊕ rear disc brake
				PRO	92129303	ø 280 x 25 x 43.2	⊕ rim 4 hole		PRO	92092103	ø 264 x 10 x 42	⊕ rim 5 hole ⊕ rear disc brake

kW / hp														
ASTRAVAN Mk V (H) 03/05→11/11														
727900														
1.7 CDTi	11/11→	81 / 110			TPM0007						TPM0008			
											94031500	ø 230 x 50	⊕ rear drum brake	
728000			Ate		2383201	[+] 23832 19.6		Luc		2341702	[–] 23417 15.2			
1.7 CDTi	11/11→	92 / 125	Ate	epad	2383281	[+] 23832 19.6		Luc	epad	2341781	[–] 23417 15.2			
			Ate		82032000					TPM0008				
				PRO	92110903	ø 308 x 25 x 42								
					TPM0007									
728100			Ate		2383201	[+] 23832 19.6		Luc		2341702	[–] 23417 15.2			
1.7 CDTI	03/05→11/11	74 / 101	Ate	epad	2383281	[+] 23832 19.6		Luc	epad	2341781	[–] 23417 15.2			
					98031400	L287			PRO	92092103	ø 264 x 10 x 42			
			Ate		82032000					TPM0008				
				PRO	92091903	ø 280 x 25 x 42								
					TPM0007									
728200			Ate		2383201	[+] 23832 19.6		Luc		2341702	[–] 23417 15.2		⊕ rear disc brake	
1.9 CDTi	03/05→11/11	88 / 120												
1.9 CDTi	03/05→11/11	110 / 150	Ate	epad	2383281	[+] 23832 19.6		Luc	epad	2341781	[–] 23417 15.2		⊕ rear disc brake	
			Ate		82032000			Luc		82060100				
			Ate		82062900			Luc		82063300				
				PRO	92110903	ø 308 x 25 x 42				91060100	ø 230 x 42	⊕ rear drum brake		
									PRO	92092003	ø 240 x 10 x 42.7	⊕ rear disc brake		
									PRO	92092103	ø 264 x 10 x 42	⊕ rear disc brake		
										94031500	ø 230 x 50	⊕ rear drum brake		
BRAVA Pickup 07/91→12/02														
728300			Ake		2154302	[+] 21543 16.5				91043600	ø 254 x 52			
2.5 DTI	08/01→12/02	74 / 101												
2.5 TD (TFR54)	07/94→12/02	56 / 76												
3.1 D	07/91→07/01	80 / 108	Ake		82049500				epad	94015500	ø 254,0 x 61			
					92075800	ø 257 x 22 x 36								
728400			Ake		2154302	[+] 21543 16.5				91063400	ø 294 x 47			
2.5 DTI 4x4	08/01→12/02	74 / 101												
2.5 TD 4x4 (TFS54)	07/94→12/02	56 / 76	Ake		82049500					97010600				
					92075800	ø 257 x 22 x 36								
BRAVA Pick-up 07/91→12/02 → BRAVA Pickup, Page 1164														
CASCADA Cabriolet 02/13→ → CASCADA Convertible, Page 1164														
CASCADA Convertible 02/13→														
728500			Man		2441201	[+] 24412 19.1				2509602	[+] 25096 16.2			
1.4	02/13→	88 / 120												
1.4	02/13→	103 / 140												
1.6	02/13→	125 / 170												
1.6	11/13→	147 / 200												
2.0 CDTI	02/13→	121 / 165												
2.0 CDTI	02/13→	143 / 194												
COMBO Mk I (B) 07/94→10/01														
728600			Ate		2054701	[o] 20547 16.8				91033200	ø 230 x 50			
1.2	07/94→10/01	33 / 45	Ate		82030600			GM		97001200				
			Ate		82062900					94003700	ø 230,0 x 58.8			
				PRO	92029603	ø 236 x 20 x 41								
728700			Ate		2054701	[o] 20547 16.8				91033200	ø 230 x 50			
1.4	07/94→10/01	44 / 60												
1.4	07/94→10/01	60 / 82												
1.4 16V	08/99→10/01	66 / 90	Ate		82030600			GM		97001200				
1.7 D	07/94→10/01	44 / 60												

		kW / hp											
COMBO Mk I (B) 07/94→10/01													
		728700	Ate		82062900					84033200	bore ø 19 ø 230 x 50	
1.4	07/94→10/01	44 / 60										
1.4	07/94→10/01	60 / 82										
1.4 16V	08/99→10/01	66 / 90		PRO	92029603	ø 236 x 20 x 41				94003700	ø 230,0 x 58.8	
1.7 D	07/94→10/01	44 / 60										
COMBO Mk II (C) Box Body / Estate (F25) 08/01→02/12													
		728800	Luc		2322501	[+] 23225 17			Luc	2341703	[+] 23417 15.2	⊕ rear disc brake
1.3 CDTI 16V	09/04→02/12	51 / 69	Ate		2383201	[+] 23832 19.6	53000001→ ⊕ incr. payload		Luc	82060100		
1.4 i 16V	01/04→11/11	66 / 90	Ate	epad	2383281	[+] 23832 19.6	53000001→ ⊕ incr. payload		Luc	82063300		
			Luc		82060200					91060100	ø 230 x 42	⊕ rear drum brake
			Ate		82032000		53000001→ ⊕ incr. payload			PRO 92092003	ø 240 x 10 x 42.7	⊕ rear disc brake
				PRO	92111103	ø 260 x 24 x 41				PRO 92124703	ø 264 x 10 x 42	⊕ rear disc brake
										94031500	ø 230 x 50	43000001→
		728900	Luc		2322501	[+] 23225 17			Luc	2341703	[+] 23417 15.2	⊕ rear disc brake
1.3 CDTI 16V	10/05→11/11	55 / 75										
1.4 16V	10/01→05/07	66 / 90	Ate		2383201	[+] 23832 19.6	53000001→ ⊕ incr. payload		Luc	82060100		
1.6	08/01→10/04	62 / 84										
1.6	10/01→11/11	64 / 87	Ate	epad	2383281	[+] 23832 19.6	53000001→ ⊕ incr. payload		Luc	82063300		
1.6 CNG 16V	04/05→02/12	71 / 97										
1.6 CNG 16V	06/06→02/12	69 / 94	Luc		82060200					91060100	ø 230 x 42	⊕ rear drum brake
1.7 DI 16V	09/01→11/11	48 / 65										
1.7 DTI 16V	10/01→11/11	55 / 75	Ate		82032000		53000001→ ⊕ incr. payload			PRO 92092003	ø 240 x 10 x 42.7	⊕ rear disc brake
				PRO	92111103	ø 260 x 24 x 41				PRO 92124703	ø 264 x 10 x 42	⊕ rear disc brake
				PRO	92124603	ø 280 x 25 x 42.5	43000001→ ⊕ incr. payload			94020300	ø 230,0 x 50.2	⊕ rear drum brake →36999999
		729000	Ate		2383201	[+] 23832 19.6			Luc	2341703	[+] 23417 15.2	
1.7 CDTI 16V	12/04→11/11	74 / 101										
			Ate	epad	2383281	[+] 23832 19.6			Luc	82060100		
			Luc		82060200				Luc	82063300		
			Ate		82032000					PRO 92092103	ø 264 x 10 x 42	
				PRO	92091903	ø 280 x 25 x 42						
COMBO Mk II (C) Kasten/Kombi (F25) 08/01→02/12 → COMBO Mk II (C) Box Body / Estate (F25), Page 1165													
COMBO Mk III (D) Box Body / Estate 11/11→													
		729100	Bos		2370802	[+] 23708 19	Ø 284 mm			91062000	ø 228.6 x 42	
1.3 CDTi	11/11→	66 / 90										
1.4	11/11→	70 / 95	Bos	epad	2370881	[+] 23708 19	Ø 284 mm			97034000		
1.4 CNG	11/11→	88 / 120										
1.6 CDTi	11/11→	66 / 90	Ate		2472701	[+] 24727 20						
1.6 CDTi	11/11→	74 / 101										
1.6 CDTi	11/11→	77 / 105	Bos		82054200		Ø 284 mm					
2.0 CDTi	11/11→	99 / 135										
			Ate		82076900							
					92046800	ø 284 x 22 x 43.5						
					92237600	ø 305 x 28 x 45.8						
				PRO	92046803	ø 284 x 22 x 43.5						
COMBO Mk III (D) Kasten/Kombi 11/11→ → COMBO Mk III (D) Box Body / Estate, Page 1165													
COMBO TOUR Mk II (C) (F25) 09/01→02/12													
		729200	Luc		2322501	[+] 23225 17			Luc	2341703	[+] 23417 15.2	⊕ rear disc brake
1.3 CDTI 16V	09/04→09/06	51 / 69										
1.4	10/04→09/10	66 / 90	Ate		2383201	[+] 23832 19.6	53000001→ ⊕ incr. payload		Luc	82060100		
			Ate	epad	2383281	[+] 23832 19.6	53000001→ ⊕ incr. payload		Luc	82063300		
			Luc		82060200					91060100	ø 230 x 42	⊕ rear drum brake
			Ate		82032000		53000001→ ⊕ incr. payload			PRO 92092003	ø 240 x 10 x 42.7	⊕ rear disc brake
				PRO	92111103	ø 260 x 24 x 41				PRO 92124703	ø 264 x 10 x 42	⊕ rear disc brake
										94031500	ø 230 x 50	43000001→

T - Z

		kW / hp										
COMBO TOUR Mk II (C) (F25) 09/01→02/12												
		729300	Luc		2322501	[+] 23225 17		Luc		2341703	[+] 23417 15.2	⊕ rear disc brake
1.3 CDTI 16V	07/06→02/12	55 / 75										
1.6	10/01→06/04	64 / 87	Ate		2383201	[+] 23832 19.6	53000001→ ⊕ incr. payload	Luc		82060100		
1.6 CNG	06/06→09/10	69 / 94										
1.6 CNG 16V	04/05→02/12	71 / 97	Ate	epad	2383281	[+] 23832 19.6	53000001→ ⊕ incr. payload	Luc		82063300		
1.7 DI 16V	09/01→06/04	48 / 65										
1.7 DTI 16V	10/01→02/12	55 / 75	Luc		82060200					91060100	ø 230 x 42	⊕ rear drum brake
			Ate		82032000		53000001→ ⊕ incr. payload		PRO	92092003	ø 240 x 10 x 42.7	⊕ rear disc brake
				PRO	92111103	ø 260 x 24 x 41			PRO	92124703	ø 264 x 10 x 42	⊕ rear disc brake
				PRO	92124603	ø 280 x 25 x 42.5	43000001→ ⊕ incr. payload			94020300	ø 230,0 x 50.2	⊕ rear drum brake →36999999
		729400	Ate		2383201	[+] 23832 19.6		Luc		2341703	[+] 23417 15.2	
1.7 CDTI 16V	12/04→09/10	74 / 101										
			Ate	epad	2383281	[+] 23832 19.6		Luc		82060100		
			Luc		82060200			Luc		82063300		
			Ate		82032000				PRO	92092103	ø 264 x 10 x 42	
				PRO	92091903	ø 280 x 25 x 42						
CORSA Mk I (B) 03/93→09/00												
		729500	Ate		2054701	[o] 20547 16.8				91044800	ø 200 x 28	
1.0 i 12V	11/96→09/00	40 / 54										
1.2 i	03/93→09/00	33 / 45	Ate		82030600					97008200		
			Ate		82062900		N 4000001→			84044801	bore ø 19 ø 200 x 28	
				PRO	92020903	ø 236 x 12.5 x 41				94009900	ø 200,0 x 34	⊖ ABS
										94022300	ø 200,0 x 34	⊕ ABS
		729600	Ate		2054701	[o] 20547 16.8				91044800	ø 200 x 28	
1.2 i 16V	03/98→09/00	48 / 65										
			Ate		82030600					97008200		
			Ate		82062900					84044801	bore ø 19 ø 200 x 28	
				PRO	92020903	ø 236 x 12.5 x 41				94009900	ø 200,0 x 34	⊖ ABS
				PRO	92029603	ø 236 x 20 x 41	⊕ air cond. ⊕ sports susp.			94022300	ø 200,0 x 34	⊕ ABS
		729700	Ate		2054701	[o] 20547 16.8				91044800	ø 200 x 28	
1.4 i	03/93→09/00	44 / 60										
			Ate		82030600					97008200		
			Ate		82062900					84044801	bore ø 19 ø 200 x 28	
				PRO	92020903	ø 236 x 12.5 x 41				94009900	ø 200,0 x 34	⊖ ABS
				PRO	92029603	ø 236 x 20 x 41				94022300	ø 200,0 x 34	⊕ ABS
		729800	Ate		2054701	[o] 20547 16.8				91044800	ø 200 x 28	
1.4 i 16V	09/94→09/00	66 / 90										
1.4 i 16V	08/97→09/00	63 / 86	Ate		82030600					97008200		
1.4 i S	03/93→09/00	60 / 82	Ate		82062900					84044801	bore ø 19 ø 200 x 28	
				PRO	92029603	ø 236 x 20 x 41				94009900	ø 200,0 x 34	⊖ ABS
										94022300	ø 200,0 x 34	⊕ ABS
		729900	Ate		2054701	[o] 20547 16.8				91044800	ø 200 x 28	
1.5 D	03/93→09/00	37 / 50										
1.7 D	02/96→09/00	44 / 60	Ate		82030600					97008200		
			Ate		82062900					84044801	bore ø 19 ø 200 x 28	
				PRO	92020903	ø 236 x 12.5 x 41				94009900	ø 200,0 x 34	⊖ ABS
										94022300	ø 200,0 x 34	⊕ ABS
		730000	Ate		2054701	[o] 20547 16.8				91044800	ø 200 x 28	
1.6 GSI 16V	03/93→09/00	80 / 109										
1.6 i 16V	09/94→09/00	78 / 106	Ate		82030600					97008200		

T - Z

		kW / hp									
CORSA Mk I (B) 03/93→09/00											
		730000	Ate		82062900					84044801	bore ø 19 ø 200 x 28	
1.6 GSI 16V	03/93→09/00	80 / 109		PRO	92056503	ø 256 x 20 x 41				94009900	ø 200,0 x 34	⊖ ABS
1.6 i 16V	09/94→09/00	78 / 106								94022300	ø 200,0 x 34	⊕ ABS
		730100	Ate		2054701	[o] 20547 16.8				91044800	ø 200 x 28	
1.6 i 16V	08/97→09/00	74 / 100								94009900	ø 200,0 x 34	⊖ ABS
										94022300	ø 200,0 x 34	⊕ ABS
CORSA Mk II (C) (W5L, F08) 08/00→10/06											
		730200	Luc		2322501	[+] 23225 17		Luc		2341703	[+] 23417 15.2	
1.0 12V	09/00→10/03	43 / 58										
1.0 12V	11/03→10/06	44 / 60	Luc		82060200					91058100	ø 200 x 29	⊖ ABS
1.2 16V	09/00→10/06	55 / 75		PRO	92111303	ø 240 x 11 x 41	⊖ ABS			91058200	ø 200 x 46	⊕ ABS
1.2 16V Dualfuel	08/01→10/06	55 / 75		PRO	92111403	ø 240 x 20 x 41	⊕ ABS			84058100	bore ø 19 ø 200 x 28	⊖ ABS
1.2 Twinport	07/04→10/06	59 / 80								84058200	bore ø 19 ø 200 x 45	⊕ ABS
										94024100	ø 200,0 x 36	⊖ ABS
										94024200	ø 200,0 x 52	⊕ ABS
		730300	Luc		2322501	[+] 23225 17		Luc		2341703	[+] 23417 15.2	
1.3 CDTI 16V	08/00→09/06	52 / 70										
1.3 CDTI 16V	09/05→09/06	55 / 75	Luc		82060200					91058100	ø 200 x 29	⊖ ABS
1.7 DI 16V	08/00→09/06	48 / 65		PRO	92111103	ø 260 x 24 x 41				91058200	ø 200 x 46	⊕ ABS
1.7 DTI 16V	08/00→09/06	55 / 75								84058100	bore ø 19 ø 200 x 28	⊖ ABS
										84058200	bore ø 19 ø 200 x 45	⊕ ABS
									PRO	92111003	ø 240 x 10.2 x 40.5	
										94024100	ø 200,0 x 36	⊖ ABS
										94024200	ø 200,0 x 52	⊕ ABS
		730400	Luc		2322501	[+] 23225 17		Luc		2328404	[+] 23284 14	
1.4 16V	09/00→10/06	66 / 90	Luc		82060200					91058100	ø 200 x 29	⊖ ABS
				PRO	92111103	ø 260 x 24 x 41				91058200	ø 200 x 46	⊕ ABS
										84058100	bore ø 19 ø 200 x 28	⊖ ABS
										84058200	bore ø 19 ø 200 x 45	⊕ ABS
									PRO	92111003	ø 240 x 10.2 x 40.5	
										94024100	ø 200,0 x 36	⊖ ABS
										94024200	ø 200,0 x 52	⊕ ABS
		730500	Luc		2322501	[+] 23225 17		Luc		2341703	[+] 23417 15.2	
1.4 Twinport	06/03→10/06	66 / 90	Luc		82060200					91058100	ø 200 x 29	⊖ ABS
				PRO	92111103	ø 260 x 24 x 41				91058200	ø 200 x 46	⊕ ABS
										84058100	bore ø 19 ø 200 x 28	⊖ ABS
										84058200	bore ø 19 ø 200 x 45	⊕ ABS
									PRO	92124703	ø 264 x 10 x 42	
										94024100	ø 200,0 x 36	⊖ ABS
										94024200	ø 200,0 x 52	⊕ ABS
		730600	Luc		2322501	[+] 23225 17		Luc		2341703	[+] 23417 15.2	
1.6	08/01→10/04	62 / 84	Luc		82060200					91058100	ø 200 x 29	⊖ ABS

T - Z

		kW / hp										
CORSA Mk II (C) (W5L, F08) 08/00→10/06												
1.6	08/01→10/04	730600 62 / 84		PRO	92111103	ø 260 x 24 x 41	→44			91058200	ø 200 x 46	⊕ ABS
				PRO	92124603	ø 280 x 25 x 42.5	74000001→			84058100	bore ø 19 ø 200 x 28	⊖ ABS
										84058200	bore ø 19 ø 200 x 45	⊕ ABS
									PRO	92111003	ø 240 x 10.2 x 40.5	
										94024100	ø 200,0 x 36	⊖ ABS
										94024200	ø 200,0 x 52	⊕ ABS
1.7 CDTI 16V	08/00→09/06	730700 74 / 100	Ate		2383201	[+] 23832 19.6		Luc		2341703	[+] 23417 15.2	
			Ate	epad	2383281	[+] 23832 19.6		Luc		82060100		
			Ate		82032000			Luc		82063300		
			Ate		82062900				PRO	92092103	ø 264 x 10 x 42	
				PRO	92124603	ø 280 x 25 x 42.5						
1.8 16V	08/00→09/06	730800 92 / 125	Luc		2322501	[+] 23225 17		Luc		2328404	[+] 23284 14	
			Luc		82060200			Luc		82060100		
				PRO	92111103	ø 260 x 24 x 41		Luc		82063300		
				PRO	92124603	ø 280 x 25 x 42.5			PRO	92124703	ø 264 x 10 x 42	
CORSA Mk III (D) (L_8) 07/06→03/12												
1.0	11/06→	730900 44 / 60	Bos		2398202	[+] 23982 17.8				91065300	ø 203.2 x 38	Ø 203 mm
			Bos		82054300					91065400	ø 228.6 x 42	
				PRO	92164603	ø 257 x 12 x 40.5				97031500		Ø 228,6 mm
				PRO	92145703	ø 257 x 22 x 40.6				97031600		Ø 203 mm
					TPM0008			Lkh		84065300	bore ø 19 ø 203.2 x 38	Ø 203 mm
										84065402	bore ø 19 ø 228.6 x 42	
										94027200	ø 228,3 x 47.5	⊕ 5-door
										94027600	ø 203,2 x 48	⊕ 3-door
1.0 i 12V	06/10→	731000 48 / 65	Bos		2398202	[+] 23982 17.8				91065300	ø 203.2 x 38	
			Bos		82054300					91065400	ø 228.6 x 42	
				PRO	92164603	ø 257 x 12 x 40.5				97031500		Ø 228,6 mm
				PRO	92145703	ø 257 x 22 x 40.6				97031600		Ø 203 mm
					TPM0008			Lkh		84065300	bore ø 19 ø 203.2 x 38	Ø 203 mm
										84065402	bore ø 19 ø 228.6 x 42	
										94027200	ø 228,3 x 47.5	⊕ 5-door
										94027600	ø 203,2 x 48	⊕ 3-door
1.2	11/06→	731100 59 / 80	Bos		2398202	[+] 23982 17.8				91065300	ø 203.2 x 38	Ø 203 mm
			Bos		82054300					91065400	ø 228.6 x 42	
				PRO	92145703	ø 257 x 22 x 40.6				97031500		Ø 228,6 mm
					TPM0008					97031600		Ø 203 mm
								Lkh		84065300	bore ø 19 ø 203.2 x 38	Ø 203 mm
										84065402	bore ø 19 ø 228.6 x 42	
										94027200	ø 228,3 x 47.5	⊕ 5-door
										94027600	ø 203,2 x 48	⊕ 3-door

CORSA Mk III (D) (L_8) 07/06→03/12

		kW / hp											
		731200	Bos		2398202	[+] 23982 17.8				91065300	ø 203.2 x 38	⊕ 3-door
1.2	06/10→	51 / 69										
1.2 LPG	09/09→	59 / 80	Bos		82054300					91065400	ø 228.6 x 42	⊕ 5-door
1.2 LPG	06/11→	61 / 83										
1.2 LPG	08/11→	63 / 86		PRO	92145703	ø 257 x 22 x 40.6				97031500		⊕ 5-door
					TPM0008					97031600		⊕ 3-door
									Lkh	84065300	bore ø 19 ø 203.2 x 38	⊕ 3-door
										84065402	bore ø 19 ø 228.6 x 42	⊕ 5-door
										94027200	ø 228,3 x 47.5	
										94027600	ø 203,2 x 48	
		731300	Bos		2398202	[+] 23982 17.8				91065300	ø 203.2 x 38	
1.2 i 16V	11/06→	63 / 86										
			Bos		82054300					91065400	ø 228.6 x 42	
				PRO	92145703	ø 257 x 22 x 40.6				97031500		Ø 228,6 mm
					TPM0008					97031600		Ø 203 mm
									Lkh	84065300	bore ø 19 ø 203.2 x 38	
										84065402	bore ø 19 ø 228.6 x 42	
										94027200	ø 228,3 x 47.5	⊕ 5-door
										94027600	ø 203,2 x 48	⊕ 3-door
		731400	Bos		2398101	[+] 23981 19.2	Ø 284 mm			91065400	ø 228.6 x 42	
1.3 CDTI	11/06→	55 / 75										
1.3 CDTI	11/06→	66 / 90	Bos		2398202	[+] 23982 17.8	Ø 257 mm			97031500		
1.3 CDTI	11/06→	70 / 95										
			Bos		82054200		Ø 284 mm			84065402	bore ø 19 ø 228.6 x 42	
			Bos		82054300		Ø 257 mm			94027200	ø 228,3 x 47.5	
				PRO	92145703	ø 257 x 22 x 40.6						
				PRO	92145803	ø 284 x 22 x 43.2						
					TPM0008							
		731500	Bos		2398202	[+] 23982 17.8				91065400	ø 228.6 x 42	
1.4	07/06→	66 / 90										
1.4	09/09→	64 / 87	Bos		82054300					97031500		
1.4	07/10→	74 / 101										
1.4 LPG	07/06→	66 / 90		PRO	92145703	ø 257 x 22 x 40.6				84065402	bore ø 19 ø 228.6 x 42	
1.4 LPG	09/09→	64 / 87										
					TPM0008					94027200	ø 228,3 x 47.5	
		731600	Bos		2455001	[+] 24550 20.2			Bos	2434903	[–] 24349 17.5	
1.4	07/12→	88 / 120										
					92156400	ø 278 x 26 x 43.2				92186403	ø 264 x 10 x 40.6	
					TPM0007					TPM0008		
		731700	Ate		2383201	[+] 23832 19.6			Bos	2434903	[–] 24349 17.5	
1.6 SRi	05/07→	110 / 150										
1.6 VXR	02/07→	141 / 192	Ate	epad	2383281	[+] 23832 19.6			Bos	82054300		
			Ate		82032000					92186403	ø 264 x 10 x 40.6	
			Ate		82062900							
				PRO	92110903	ø 308 x 25 x 42						
		731800							Bos	2434903	[–] 24349 17.5	
1.6 VXR	06/11→03/12	150 / 204										
										92186403	ø 264 x 10 x 40.6	
										TPM0008		
		731900	Bos		2455001	[+] 24550 20.2			Bos	2434903	[–] 24349 17.5	
1.7 CDTI	11/06→	92 / 125										
1.7 CDTI	11/06→	96 / 131	Bos		82054200				Bos	82054300		

T - Z

		kW / hp										
CORSA Mk III (D) (L_8) 07/06→03/12												
		731900		92156400	ø 278 x 26 x 43.2			PRO	92186403	ø 264 x 10 x 40.6	
1.7 CDTI	11/06→	92 / 125									
1.7 CDTI	11/06→	96 / 131									
CORSA Mk IV (E) 08/14→												
		732000	Ate	2383201	[+] 23832 19.6	16'' -brake		PRO	92186403	ø 264 x 10 x 40.6	16'' -brake
1.2	08/14→	51 / 69									
1.4	08/14→	66 / 90	Ate	2383281	[+] 23832 19.6	16'' -brake					
1.4	08/14→	74 / 101		epad							
			Ate	82032000		15''/16'' -brake					
				PRO 92110903	ø 308 x 25 x 42	16'' -brake					
				PRO 92145703	ø 257 x 22 x 40.6	14'' -brake					
				PRO 92145803	ø 284 x 22 x 43.2	15'' -brake					
				TPM0007		16'' -brake					
CORSAVAN Mk I (B) 01/94→09/00												
		732100	Ate	2054701	[o] 20547 16.8				91044800	ø 200 x 28	
1.4 i	01/94→09/00	44 / 60									
1.7 D	01/94→09/00	44 / 60	Ate	82030600					97008200		
			Ate	82062900					84044801	bore ø 19 ø 200 x 28	
				PRO 92020903	ø 236 x 12.5 x 41				94009900	ø 200,0 x 34	⊖ ABS
				PRO 92029603	ø 236 x 20 x 41				94022300	ø 200,0 x 34	⊕ ABS
CORSAVAN Mk II (C) 09/00→06/06												
		732200	Luc	2322501	[+] 23225 17				91058100	ø 200 x 29	⊖ ABS
1.2 16V	09/00→06/06	55 / 75									
1.2 16V Dualfuel	08/01→06/06	55 / 75	Luc	82060200					91058200	ø 200 x 46	⊕ ABS
1.3 CDTI 16V	04/04→06/06	52 / 70									
1.4	11/03→06/06	66 / 89		PRO 92111303	ø 240 x 11 x 41	⊖ ABS			84058100	bore ø 19 ø 200 x 28	⊖ ABS
1.7 DI 16V	09/00→06/06	48 / 65		PRO 92111103	ø 260 x 24 x 41				84058200	bore ø 19 ø 200 x 45	⊕ ABS
				PRO 92111403	ø 240 x 20 x 41	⊕ ABS			94024100	ø 200,0 x 36	⊖ ABS
									94024200	ø 200,0 x 52	⊕ ABS
		732300	Luc	2322501	[+] 23225 17		Luc		2341702	[–] 23417 15.2	
1.7 DTI 16V	09/00→06/06	55 / 75									
			Ate	2383201	[+] 23832 19.6		Luc		2341781	[–] 23417 15.2	
			Ate	2383281	[+] 23832 19.6			epad			
									91058100	ø 200 x 29	⊖ ABS
			Luc	82060200					91058200	ø 200 x 46	⊕ ABS
				PRO 92111103	ø 260 x 24 x 41				84058100	bore ø 19 ø 200 x 28	⊖ ABS
				PRO 92124603	ø 280 x 25 x 42.5				84058200	bore ø 19 ø 200 x 45	⊕ ABS
								PRO	92124703	ø 264 x 10 x 42	
									94024100	ø 200,0 x 36	⊖ ABS
									94024200	ø 200,0 x 52	⊕ ABS
CORSAVAN Mk III (D) 07/06→												
		732400	Bos	2398202	[+] 23982 17.8				91065300	ø 203.2 x 38	
1.2	07/09→	59 / 80									
1.2	01/10→	51 / 69	Bos	82054300					91065400	ø 228.6 x 42	
				PRO 92145703	ø 257 x 22 x 40.6				97031500		Ø 228,6 mm
									97031600		Ø 203 mm
							Lkh		84065300	bore ø 19 ø 203.2 x 38	
									84065402	bore ø 19 ø 228.6 x 42	
									94027200	ø 228,3 x 47.5	⊕ 5-door
									94027600	ø 203,2 x 48	⊕ 3-door
		732500	Bos	2398101	[+] 23981 19.2	Ø 284 mm			91065400	ø 228.6 x 42	
1.3 CDTI	07/06→	55 / 75									
1.3 CDTI	07/06→	66 / 90									

T - Z

30 kW / hp

CORSAVAN Mk III (D) 07/06→

		732500	Bos		2398202	[+] 23982 17.8	Ø 257 mm			97031500			
1.3 CDTI	07/06→	55 / 75												
1.3 CDTI	07/06→	66 / 90	Bos		82054200		Ø 284 mm			84065402	bore ø 19 ø 228.6 x 42	
			Bos		82054300		Ø 257 mm			94027200	ø 228,3 x 47.5	
				PRO	92145703	ø 257 x 22 x 40.6						
				PRO	92145803	ø 284 x 22 x 43.2						
		732600	Bos		2398101	[+] 23981 19.2	Ø 284 mm	Bos		2434903	[–] 24349 17.5	
1.3 CDTI	07/06→	70 / 95	Bos		2398202	[+] 23982 17.8	74012346→ 76012346→ Ø 257 mm	Bos		82054300		
			Bos		82054200		Ø 284 mm			91065400	ø 228.6 x 42	A4000001→ A6000001→
			Bos		82054300		74012346→ 76012346→ Ø 257 mm		PRO	92186403	ø 264 x 10 x 40.6	
			Ate		82032000					TPM0008		
				PRO	92145703	ø 257 x 22 x 40.6	94219782→ 96093346→					
				PRO	92145803	ø 284 x 22 x 43.2	A4999999→ A6999999→					
					TPM0008							

FRONTERA Mk II (B) 10/98→10/04

		732700	Ake		2325001	[o] 23250 16.5	⊕ on-board comp.	Sum		2187503	[+] 21875 15.8	
2.2 DTI	10/98→09/04	85 / 116										
3.2 i	10/98→10/04	151 / 205	Ake		2184501	[+] 21845 16.5	⊖ on-board comp.	Sum		82033800		
			Ake		82033700					92091600	ø 313 x 18 x 80	
					92091400	ø 280 x 26 x 36	⊕ ABS			91059200	ø 210 x 32	3V500001→
		732800	Ake		2325001	[o] 23250 16.5	⊕ on-board comp.	Sum		2187503	[+] 21875 15.8	
2.2 i	10/98→10/04	100 / 136	Ake		2184501	[+] 21845 16.5	⊖ on-board comp.	Sum		82033800		
			Ake		82033700					92091600	ø 313 x 18 x 80	
					92091400	ø 280 x 26 x 36	⊕ ABS			91059200	ø 210 x 32	→2V599999

INSIGNIA 07/08→

		732900	Man		2441501	[+] 24415 19.1		TRW		2442101	[+] 24421 17.3	
1.4	04/11→	103 / 140										
1.4 LPG	07/12→	103 / 140	Man		82503800					82513400		
1.6	07/08→	85 / 116										
1.8	07/08→09/13	103 / 140		PRO	92186903	ø 296 x 30 x 51			PRO	92222903	ø 292 x 12 x 48	
2.0 CDTI	07/08→	81 / 110										
2.0 CDTI	07/08→	96 / 130										
2.0 CDTI	03/12→	88 / 120										
		733000	Man		2441201	[+] 24412 19.1	17" -brake	TRW		2442102	[+] 24421 17.3	
1.6 Turbo	01/09→	132 / 180										
1.6 Turbo	07/13→	125 / 170	TRW		2441801	[+] 24418 17.2	17+" -brake	Luc		82503900		
2.0 Turbo	07/08→	162 / 220										
2.0 Turbo 4x4	07/08→	162 / 220	Man		82503800				PRO	92187303	ø 315 x 23 x 48	
				PRO	92187003	ø 321 x 30 x 50.9	17" -brake					
				PRO	92187103	ø 337 x 30 x 50.9	17+" -brake					
		733100	Man		2441201	[+] 24412 19.1		TRW		2442102	[+] 24421 17.3	
2.0 Biturbo CDTI	03/12→	143 / 195										
2.0 Biturbo CDTI 4x4	03/12→	143 / 195	Man		82503800			Luc		82503900		
2.0 CDTI	10/08→	140 / 190										
2.0 CDTI 4x4	05/09→	140 / 190		PRO	92187003	ø 321 x 30 x 50.9			PRO	92187303	ø 315 x 23 x 48	
2.0 Turbo 4x4	09/11→	184 / 250										
		733200	Man		2441201	[+] 24412 19.1	17" -brake	TRW		2442102	[+] 24421 17.3	
2.0 CDTI	07/08→	118 / 160	Man		2441501	[+] 24415 19.1	16" -brake	Luc		82503900		
			TRW		2441801	[+] 24418 17.2	17+" -brake		PRO	92222903	ø 292 x 12 x 48	16" -brake
			Man		82503800				PRO	92187303	ø 315 x 23 x 48	17" -brake
				PRO	92186903	ø 296 x 30 x 51	16" -brake					
				PRO	92187003	ø 321 x 30 x 50.9	17" -brake					

T - Z

		kW / hp											
INSIGNIA 07/08→													
		733200		PRO	**92187103**	ø 337 x 30 x 50.9	17+" -brake						
2.0 CDTI	07/08→	118 / 160											
		733300	Man		**2441201**	[+] 24412 19.1	17" -brake	TRW		**2442101**	[+] 24421 17.3	16" -brake B1000001→	
2.0 CDTI	07/13→	103 / 140											
2.0 CDTI	07/13→	120 / 163	Man		**2441501**	[+] 24415 19.1	16" -brake	TRW		**2442102**	[+] 24421 17.3	17"/17+"/18+" -brake	
2.0 CDTI 4x4	07/13→	120 / 163											
			TRW		**2441801**	[+] 24418 17.2	17+" -brake		PRO	**92222903**	ø 292 x 12 x 48	16" -brake A1000001→	
				PRO	**92186903**	ø 296 x 30 x 51	16" -brake A1000001→		PRO	**92187303**	ø 315 x 23 x 48	17"/17+"/18+" -brake C1000001→	
				PRO	**92187003**	ø 321 x 30 x 50.9	17" -brake A1000001→						
		733400	Man		**2441201**	[+] 24412 19.1	17" -brake	TRW		**2442102**	[+] 24421 17.3		
2.0 CDTI 4x4	07/08→	118 / 160											
			Man		**2441501**	[+] 24415 19.1	16" -brake	Luc		**82503900**			
			TRW		**2441801**	[+] 24418 17.2	17+" -brake		PRO	**92187303**	ø 315 x 23 x 48		
			Man		**82503800**								
				PRO	**92186903**	ø 296 x 30 x 51	16" -brake						
				PRO	**92187003**	ø 321 x 30 x 50.9	17" -brake						
				PRO	**92187103**	ø 337 x 30 x 50.9	17+" -brake						
		733500	Man		**2441201**	[+] 24412 19.1	17" -brake	TRW		**2442101**	[+] 24421 17.3		
2.0 Turbo	04/14→	184 / 250											
			Man		**2441501**	[+] 24415 19.1	16" -brake		PRO	**92222903**	ø 292 x 12 x 48	16" -brake	
			TRW		**2441801**	[+] 24418 17.2	17+" -brake		PRO	**92187303**	ø 315 x 23 x 48	17",17+" -brake	
				PRO	**92186903**	ø 296 x 30 x 51	16" -brake						
				PRO	**92187003**	ø 321 x 30 x 50.9	17" -brake						
				PRO	**92187103**	ø 337 x 30 x 50.9	17+" -brake						
		733600	TRW		**2441801**	[+] 24418 17.2		TRW		**2442102**	[+] 24421 17.3		
2.8 V6 Turbo 4x4	07/08→	191 / 260											
			Luc		**82504200**			Luc		**82503900**			
				PRO	**92187103**	ø 337 x 30 x 50.9			PRO	**92187303**	ø 315 x 23 x 48		
		733700	Bre		**2332502**	[+] 23325 16		TRW		**2442102**	[+] 24421 17.3		
2.8 VXR	07/09→	239 / 325											
			Bre		**82072400**			Luc		**82503900**			
									PRO	**92187303**	ø 315 x 23 x 48		
INSIGNIA Saloon 07/08→													
		733800	Man		**2441501**	[+] 24415 19.1		TRW		**2442101**	[+] 24421 17.3		
1.4	04/11→	103 / 140											
1.4 LPG	07/12→	103 / 140	Man		**82503800**					**82513400**			
1.6	07/08→	85 / 116											
1.8	07/08→09/13	103 / 140		PRO	**92186903**	ø 296 x 30 x 51			PRO	**92222903**	ø 292 x 12 x 48		
2.0 CDTI	07/08→	81 / 110											
2.0 CDTI	07/08→	96 / 130											
2.0 CDTI	03/12→	88 / 120											
		733900	Man		**2441201**	[+] 24412 19.1	17" -brake	TRW		**2442102**	[+] 24421 17.3		
1.6 Turbo	01/09→	132 / 180											
1.6 Turbo	07/13→	125 / 170	TRW		**2441801**	[+] 24418 17.2	17+" -brake	Luc		**82503900**			
2.0 Turbo	07/08→	162 / 220											
2.0 Turbo 4x4	07/08→	162 / 220	Man		**82503800**				PRO	**92187303**	ø 315 x 23 x 48		
				PRO	**92187003**	ø 321 x 30 x 50.9	17" -brake						
				PRO	**92187103**	ø 337 x 30 x 50.9	17+" -brake						
		734000	Man		**2441201**	[+] 24412 19.1		TRW		**2442102**	[+] 24421 17.3		
2.0 Biturbo CDTI	03/12→	143 / 195											
2.0 Biturbo CDTI 4x4	03/12→	143 / 195	Man		**82503800**			Luc		**82503900**			
2.0 CDTI	11/08→	140 / 190											
2.0 CDTI 4x4	05/09→	140 / 190		PRO	**92187003**	ø 321 x 30 x 50.9			PRO	**92187303**	ø 315 x 23 x 48		
2.0 Turbo 4x4	09/11→	184 / 250											
		734100	Man		**2441201**	[+] 24412 19.1	17" -brake	TRW		**2442102**	[+] 24421 17.3		
2.0 CDTI	07/08→	118 / 160											
2.0 CDTI 4x4	07/08→	118 / 160	Man		**2441501**	[+] 24415 19.1	16" -brake	Luc		**82503900**			
			TRW		**2441801**	[+] 24418 17.2	17+" -brake		PRO	**92187303**	ø 315 x 23 x 48		

T - Z

		kW / hp										
INSIGNIA Saloon 07/08→												
734100			Man		**82503800**							
2.0 CDTI	07/08→	118 / 160		PRO	**92186903**	ø 296 x 30 x 51	16" -brake					
2.0 CDTI 4x4	07/08→	118 / 160		PRO	**92187003**	ø 321 x 30 x 50.9	17" -brake					
				PRO	**92187103**	ø 337 x 30 x 50.9	17+" -brake					
734200			Man		**2441201**	[+] 24412 19.1	17" -brake	TRW		**2442101**	[+] 24421 17.3	16" -brake B1000001→
2.0 CDTI	07/13→	103 / 140										
2.0 CDTI	07/13→	120 / 163	Man		**2441501**	[+] 24415 19.1	16" -brake	TRW		**2442102**	[+] 24421 17.3	17"/17+"/18+" -brake
2.0 CDTI 4x4	07/13→	120 / 163										
			TRW		**2441801**	[+] 24418 17.2	17+" -brake		PRO	**92222903**	ø 292 x 12 x 48	16" -brake A1000001→
				PRO	**92186903**	ø 296 x 30 x 51	16" -brake A1000001→		PRO	**92187303**	ø 315 x 23 x 48	17"/17+"/18+" -brake C1000001→
				PRO	**92187003**	ø 321 x 30 x 50.9	17" -brake A1000001→					
734300			TRW		**2441801**	[+] 24418 17.2		TRW		**2442102**	[+] 24421 17.3	
2.8 V6 Turbo 4x4	07/08→	191 / 260	Luc		**82504200**			Luc		**82503900**		
				PRO	**92187103**	ø 337 x 30 x 50.9			PRO	**92187303**	ø 315 x 23 x 48	
734400			Bre		**2332502**	[+] 23325 16		TRW		**2442102**	[+] 24421 17.3	
2.8 VXR	07/09→	239 / 325	Bre		**82072400**			Luc		**82503900**		
									PRO	**92187303**	ø 315 x 23 x 48	
INSIGNIA SPORTS TOURER 07/08→												
734500			Man		**2441501**	[+] 24415 19.1		TRW		**2442101**	[+] 24421 17.3	
1.4	04/11→	103 / 140										
1.6	07/08→	85 / 116	Man		**82503800**					**82513400**		
1.8	07/08→09/13	103 / 140										
2.0 CDTI	07/08→	81 / 110		PRO	**92186903**	ø 296 x 30 x 51			PRO	**92222903**	ø 292 x 12 x 48	
2.0 CDTI	07/08→	96 / 130										
2.0 CDTI	03/12→	88 / 120										
734600			Man		**2441201**	[+] 24412 19.1		TRW		**2442102**	[+] 24421 17.3	
1.4 LPG	07/12→	103 / 140	Man		**82503800**			Luc		**82503900**		
				PRO	**92187003**	ø 321 x 30 x 50.9			PRO	**92222903**	ø 292 x 12 x 48	
									PRO	**92187303**	ø 315 x 23 x 48	
734700			Man		**2441201**	[+] 24412 19.1	17" -brake	TRW		**2442102**	[+] 24421 17.3	
1.6 Turbo	01/09→	132 / 180										
1.6 Turbo	07/13→	125 / 170	TRW		**2441801**	[+] 24418 17.2	17+" -brake	Luc		**82503900**		
2.0 Turbo	07/08→	162 / 220										
2.0 Turbo 4x4	07/08→	162 / 220	Man		**82503800**				PRO	**92187303**	ø 315 x 23 x 48	
				PRO	**92187003**	ø 321 x 30 x 50.9	17" -brake					
				PRO	**92187103**	ø 337 x 30 x 50.9	17+" -brake					
734800			Man		**2441201**	[+] 24412 19.1		TRW		**2442102**	[+] 24421 17.3	
2.0 Biturbo CDTI	03/12→	143 / 195										
2.0 Biturbo CDTI 4x4	03/12→	143 / 195	Man		**82503800**			Luc		**82503900**		
2.0 CDTI	11/08→	140 / 190										
2.0 CDTI 4x4	05/09→	140 / 190		PRO	**92187003**	ø 321 x 30 x 50.9			PRO	**92187303**	ø 315 x 23 x 48	
2.0 Turbo 4x4	09/11→	184 / 250										
734900			Man		**2441201**	[+] 24412 19.1	17" -brake	TRW		**2442102**	[+] 24421 17.3	
2.0 CDTI	07/08→	118 / 160										
2.0 CDTI 4x4	07/08→	118 / 160	Man		**2441501**	[+] 24415 19.1	16" -brake	Luc		**82503900**		
			TRW		**2441801**	[+] 24418 17.2	17+" -brake		PRO	**92187303**	ø 315 x 23 x 48	
			Man		**82503800**							
				PRO	**92186903**	ø 296 x 30 x 51	16" -brake					
				PRO	**92187003**	ø 321 x 30 x 50.9	17" -brake					
				PRO	**92187103**	ø 337 x 30 x 50.9	17+" -brake					
735000			Man		**2441201**	[+] 24412 19.1	17" -brake	TRW		**2442101**	[+] 24421 17.3	16" -brake B1000001→
2.0 CDTI	07/13→	103 / 140										
2.0 CDTI	07/13→	120 / 163	Man		**2441501**	[+] 24415 19.1	16" -brake	TRW		**2442102**	[+] 24421 17.3	17"/17+"/18+" -brake
2.0 CDTI 4x4	07/13→	120 / 163										

		kW / hp										
INSIGNIA SPORTS TOURER 07/08→												
735000			TRW		**2441801**	[+] 24418 17.2	17+" -brake		PRO	**92222903**	ø 292 x 12 x 48	16" -brake A1000001→
2.0 CDTI	07/13→	103 / 140										
2.0 CDTI	07/13→	120 / 163		PRO	**92186903**	ø 296 x 30 x 51	16" -brake A1000001→		PRO	**92187303**	ø 315 x 23 x 48	17"/17+"/18+" -brake C1000001→
2.0 CDTI 4x4	07/13→	120 / 163		PRO	**92187003**	ø 321 x 30 x 50.9	17" -brake A1000001→					
735100			Man		**2441201**	[+] 24412 19.1	17" -brake	TRW		**2442101**	[+] 24421 17.3	
2.0 Turbo	04/14→	184 / 250	Man		**2441501**	[+] 24415 19.1	16" -brake		PRO	**92222903**	ø 292 x 12 x 48	16" -brake
			TRW		**2441801**	[+] 24418 17.2	17+" -brake		PRO	**92187303**	ø 315 x 23 x 48	17",17+" -brake
				PRO	**92186903**	ø 296 x 30 x 51	16" -brake					
				PRO	**92187003**	ø 321 x 30 x 50.9	17" -brake					
				PRO	**92187103**	ø 337 x 30 x 50.9	17+" -brake					
735200			TRW		**2441801**	[+] 24418 17.2		TRW		**2442102**	[+] 24421 17.3	
2.8 V6 Turbo	08/08→	191 / 260	Luc		**82504200**			Luc		**82503900**		
				PRO	**92187103**	ø 337 x 30 x 50.9			PRO	**92187303**	ø 315 x 23 x 48	
735300			Bre		**2332502**	[+] 23325 16		TRW		**2442102**	[+] 24421 17.3	
2.8 VXR	07/09→	239 / 325	Bre		**82072400**			Luc		**82503900**		
									PRO	**92187303**	ø 315 x 23 x 48	
INSIGNIA Stufenheck 07/08→ → INSIGNIA Saloon, Page 1172												
MERIVA Mk I (A) 01/03→06/10												
735400			Ate		**2383201**	[+] 23832 19.6		Luc		**2341703**	[+] 23417 15.2	
1.3 CDTI	01/03→10/09	55 / 75										
1.6 i 16V	01/03→09/05	74 / 100	Ate	©pad	**2383281**	[+] 23832 19.6		Luc		**82060100**		
1.6 i 16V Twinport	05/03→06/10	77 / 105	Ate		**82032000**			Luc		**82063300**		
1.7 DTI 16V	06/03→06/10	55 / 75										
1.8 i 16V	05/03→08/05	92 / 125	Ate		**82062900**				PRO	**92092103**	ø 264 x 10 x 42	⊕ rim 5 hole
				PRO	**92091903**	ø 280 x 25 x 42	⊕ rim 5 hole		PRO	**92124703**	ø 264 x 10 x 42	⊕ rim 4 hole
				PRO	**92124603**	ø 280 x 25 x 42.5	⊕ rim 4 hole			**TPM0008**		
735500			Luc		**2322501**	[+] 23225 17	⊕ rim 4 hole	Luc		**2341703**	[+] 23417 15.2	
1.4 16V Twinport	01/03→10/09	66 / 90										
1.6 i	01/03→06/10	64 / 87	Ate		**2383201**	[+] 23832 19.6	⊕ rim 5 hole	Luc		**82060100**		
			Ate	©pad	**2383281**	[+] 23832 19.6	⊕ rim 5 hole	Luc		**82063300**		
			Ate		**82032000**		⊕ rim 5 hole		PRO	**92092003**	ø 240 x 10 x 42.7	⊕ rim 4 hole
			Luc		**82063300**				PRO	**92092103**	ø 264 x 10 x 42	⊕ rim 5 hole
				PRO	**92091903**	ø 280 x 25 x 42	⊕ rim 5 hole			**TPM0008**		
				PRO	**92111103**	ø 260 x 24 x 41	⊕ rim 4 hole					
735600			Ate		**2383201**	[+] 23832 19.6		Luc		**2341703**	[+] 23417 15.2	
1.6 Turbo	05/06→06/10	132 / 180	Ate	©pad	**2383281**	[+] 23832 19.6		Luc		**82060100**		
			Ate		**82032000**			Luc		**82063300**		
			Ate		**82062900**				PRO	**92092103**	ø 264 x 10 x 42	⊕ rim 5 hole
				PRO	**92110903**	ø 308 x 25 x 42	⊕ rim 5 hole			**TPM0008**		
735700			Ate		**2383201**	[+] 23832 19.6		Luc		**2341703**	[+] 23417 15.2	
1.7 CDTI 16V	09/03→08/05	74 / 100	Ate	©pad	**2383281**	[+] 23832 19.6		Luc		**82060100**		
			Ate		**82032000**			Luc		**82063300**		
			Ate		**82062900**				PRO	**92092103**	ø 264 x 10 x 42	⊕ rim 5 hole
				PRO	**92091903**	ø 280 x 25 x 42	⊕ rim 5 hole			**TPM0008**		

T - Z

30 kW / hp

MERIVA Mk II (B) 06/10→

735800													
1.3 CDTi	06/10→	70 / 95	Ate		2383201	[+] 23832 19.6		Luc		2341702	[–] 23417 15.2	
			Ate	epad	2383281	[+] 23832 19.6		Luc	epad	2341781	[–] 23417 15.2	
			Ate		82032000			Luc		82060100		
				PRO	92091903	ø 280 x 25 x 42		Luc		82063300		
					TPM0007				PRO	92092103	ø 264 x 10 x 42	
										TPM0008		
735900													
1.3 CDTI	06/10→	55 / 75	Ate		2383201	[+] 23832 19.6		Luc		2341702	[–] 23417 15.2	
1.4	06/10→	74 / 101	Ate	epad	2383281	[+] 23832 19.6		Luc	epad	2341781	[–] 23417 15.2	
			Ate		82032000			Luc		82060100		
				PRO	92091903	ø 280 x 25 x 42		Luc		82063300		
					TPM0007				PRO	92092103	ø 264 x 10 x 42	
736000													
1.4	06/10→	88 / 120	Ate		2383201	[+] 23832 19.6		Luc		2341702	[–] 23417 15.2	
			Ate	epad	2383281	[+] 23832 19.6		Luc	epad	2341781	[–] 23417 15.2	
			Ate		82032000			Luc		82060100		
				PRO	92091903	ø 280 x 25 x 42	⊕ 5-speed man.	Luc		82063300		
				PRO	92110903	ø 308 x 25 x 42	⊕ 6-speed man.		PRO	92092103	ø 264 x 10 x 42	
					TPM0007							
736100													
1.4	06/10→	103 / 140	Ate		2383201	[+] 23832 19.6		Luc		2341702	[–] 23417 15.2	
			Ate	epad	2383281	[+] 23832 19.6		Luc	epad	2341781	[–] 23417 15.2	
			Ate		82032000			Luc		82060100		
				PRO	92110903	ø 308 x 25 x 42		Luc		82063300		
					TPM0007				PRO	92092103	ø 264 x 10 x 42	
736200													
1.4 LPG	06/11→	88 / 120	Ate		2383201	[+] 23832 19.6		Luc		2341702	[–] 23417 15.2	
			Ate	epad	2383281	[+] 23832 19.6		Luc	epad	2341781	[–] 23417 15.2	
			Ate		82032000			Luc		82060100		
				PRO	92091903	ø 280 x 25 x 42	⊕ man. D4000001→	Luc		82063300		
				PRO	92110903	ø 308 x 25 x 42	⊕ man. →C4999999		PRO	92092103	ø 264 x 10 x 42	
					TPM0007					TPM0008		
736300													
1.6 CDTi	11/13→	100 / 136	Ate		2383201	[+] 23832 19.6		Luc		2341702	[–] 23417 15.2	
1.6 CDTi ecoFLEX	07/14→	81 / 110	Ate	epad	2383281	[+] 23832 19.6		Luc	epad	2341781	[–] 23417 15.2	
			Ate		82032000				PRO	92092103	ø 264 x 10 x 42	
				PRO	92110903	ø 308 x 25 x 42						
					TPM0007							
736400													
1.7 CDTi	06/10→	81 / 110	Ate		2383201	[+] 23832 19.6		Luc		2341702	[–] 23417 15.2	
1.7 CDTI	06/10→	74 / 101	Ate	epad	2383281	[+] 23832 19.6		Luc	epad	2341781	[–] 23417 15.2	
			Ate		82032000			Luc		82060100		
				PRO	92091903	ø 280 x 25 x 42	→B4	Luc		82063300		
				PRO	92110903	ø 308 x 25 x 42	B4→		PRO	92092103	ø 264 x 10 x 42	
					TPM0007							
736500													
1.7 CDTi	06/10→	96 / 131	Ate		2383201	[+] 23832 19.6		Luc		2341702	[–] 23417 15.2	

T - Z

		kW / hp										
MERIVA Mk II (B) 06/10→												
736500			Ate		2383281	[+] 23832 19.6		Luc		2341781	[–] 23417 15.2	
1.7 CDTi	06/10→	96 / 131	Ate		82032000			Luc		82060100		
				PRO	92091903	ø 280 x 25 x 42	→B4	Luc		82063300		
				PRO	92110903	ø 308 x 25 x 42	B4→		PRO	92092103	ø 264 x 10 x 42	
					TPM0007					TPM0008		
MOKKA 06/12→												
736600					2503401	[+] 25034 18.8				2509602	[+] 25096 16.2	
1.4	04/13→	103 / 140			2503481	[+] 25034 18.8			PRO	92205503	ø 268 x 12 x 45.1	
				PRO	92243303	ø 300 x 26 x 45.5						
736700					2503401	[+] 25034 18.8				2509602	[+] 25096 16.2	
1.4 4x4	06/12→	103 / 140										
1.6	06/12→	85 / 116			2503481	[+] 25034 18.8				82516700		
1.7 CDTI	06/12→	96 / 131										
1.7 CDTI 4x4	06/12→	96 / 131	Man		82505200				PRO	92205503	ø 268 x 12 x 45.1	
				PRO	92243303	ø 300 x 26 x 45.5						
MONARO 03/04→04/07												
736800					2481501	[–] 24815 14.5		Luc		2481801	[–] 24818 18.5	
5.7	03/04→07/05	285 / 387										
5.7	03/04→08/05	242 / 329										
5.7	04/04→08/05	279 / 380										
5.7	01/05→04/07	257 / 349										
6.0	01/05→04/07	293 / 398										
6.0	10/06→04/07	362 / 493										
MONTEREY Mk II 07/98→08/99												
736900			Ake		2184501	[+] 21845 16.5		Sum		2187503	[+] 21875 15.8	
3.0 DTI	07/98→08/99	117 / 159										
3.5 V6 24V	07/98→08/99	158 / 215	Ake		82033700			Sum		82033800		
					92091400	ø 280 x 26 x 36				92091600	ø 313 x 18 x 80	
										91059200	ø 210 x 32	
MOVANO Mk I (A) Chassis/Cab (ED, UD, HD) 10/98→05/10												
737000			Bos		2330201	[–] 23302 17.5	⊕ rim size 15"	Bos		2366901	[–] 23669 16.8	⊕ rear disc brake
2.2 DTI	09/00→05/10	66 / 90										
2.5 CDTI	04/04→05/10	74 / 101										
2.5 CDTI	08/06→05/10	88 / 120	Bos		2361301	[–] 23613 17.8	⊕ rim size 16"	Bos		82063800		
2.5 CDTI	08/06→05/10	107 / 146										
2.5 D	10/98→09/00	59 / 80	Bos		82076300			Bos		82510100		
2.5 DTI	10/01→05/10	84 / 115										
2.8 DTI	10/98→10/01	84 / 114			92097700	ø 280 x 24 x 61.5	⊕ rim size 15"			91054500	ø 280 x 65	⊕ rear drum brake
3.0 DTi	10/03→05/10	100 / 136		PRO	92115903	ø 305.5 x 28 x 77.8	⊕ rim size 16"			97014600		⊕ rear drum brake
					TPM0004					83054500	bore ø 23.8 ø 280 x 65	⊕ rear drum brake
										84054500	bore ø 23.8 ø 280 x 65	⊕ rear drum brake
									PRO	92111203	ø 305 x 12 x 66.8	⊕ rear disc brake
										TPM0004		
										94027000	ø 280,0 x 69.5	⊕ rear drum brake
MOVANO Mk I (A) Combi (JD) 10/98→05/10												
737100			Bos		2330201	[–] 23302 17.5	⊕ rim size 15"	Bos		2366901	[–] 23669 16.8	⊕ rear disc brake
1.9 DTI	09/00→10/01	59 / 80										
1.9 DTI	10/01→05/10	60 / 82	Bos		2361301	[–] 23613 17.8	⊕ rim size 16"	Bos		82063800		
2.2 DTI	09/00→05/10	66 / 90										
2.5 CDTI	10/01→08/09	74 / 101	Bos		82076300			Bos		82510100		
2.5 CDTI	02/03→08/09	88 / 120										
2.5 CDTI	08/06→05/10	107 / 146										
2.5 D	10/98→09/00	59 / 80			92097700	ø 280 x 24 x 61.5	⊕ rim size 15"			91054500	ø 280 x 65	⊕ rear drum brake
2.5 DTI	10/01→08/09	84 / 115										
2.8 DTI	10/98→10/01	84 / 114										
3.0 DTi	10/03→05/10	100 / 136		PRO	92115903	ø 305.5 x 28 x 77.8	⊕ rim size 16"			97014600		⊕ rear drum brake
					TPM0004					83054500	bore ø 23.8 ø 280 x 65	⊕ rear drum brake
										84054500	bore ø 23.8 ø 280 x 65	⊕ rear drum brake

T - Z

		kW / hp									
MOVANO Mk I (A) Combi (JD) 10/98→05/10											
		737100									
1.9 DTI	09/00→10/01	59 / 80							PRO	92111203	ø 305 x 12 x 66.8 ⊕ rear disc brake
1.9 DTI	10/01→05/10	60 / 82								TPM0004	
2.2 DTI	09/00→05/10	66 / 90								94027000	ø 280,0 x 69.5 ⊕ rear drum brake
2.5 CDTI	10/01→08/09	74 / 101									
2.5 CDTI	02/03→08/09	88 / 120									
2.5 CDTI	08/06→05/10	107 / 146									
2.5 D	10/98→09/00	59 / 80									
2.5 DTI	10/01→08/09	84 / 115									
2.8 DTI	10/98→10/01	84 / 114									
3.0 DTi	10/03→05/10	100 / 136									
MOVANO Mk I (A) Van (FD) 10/98→05/10											
		737200	Bos		2330201	[–] 23302 17.5	⊕ rim size 15"	Bos		2366901	[–] 23669 16.8 ⊕ rear disc brake
1.9 DTI	09/00→10/01	59 / 80						Bos		82063800	
1.9 DTI	10/01→05/10	60 / 82	Bos		2361301	[–] 23613 17.8	⊕ rim size 16"	Bos		82510100	
2.2 DTI	09/00→05/10	66 / 90									
2.5 CDTI	04/04→05/10	74 / 101	Bos		82076300					91054500	ø 280 x 65 ⊕ rear drum brake
2.5 CDTI	08/06→05/10	88 / 120			92097700	ø 280 x 24 x 61.5	⊕ rim size 15"			97014600	⊕ rear drum brake
2.5 CDTI	08/06→05/10	107 / 146		PRO	92115903	ø 305.5 x 28 x 77.8	⊕ rim size 16"			83054500	bore ø 23.8 ø 280 x 65 ⊕ rear drum brake
2.5 D	10/98→09/00	59 / 80			TPM0004					84054500	bore ø 23.8 ø 280 x 65 ⊕ rear drum brake
2.5 DTI	10/01→05/10	84 / 115							PRO	92111203	ø 305 x 12 x 66.8 ⊕ rear disc brake
2.8 TDI	10/98→10/01	84 / 114								TPM0004	
3.0 DTi	10/03→05/10	100 / 136								94027000	ø 280,0 x 69.5 ⊕ rear drum brake
MOVANO Mk II (B) Chassis/Cab 05/10→											
		737300	Bre		2514701	[+] 25147 18		Bos		2511201	[+] 25112 18.1 ⊕ single tyre
2.3 CDTI [RWD]	07/10→	74 / 101									
2.3 CDTI [RWD]	07/10→	92 / 125	Bos		82076300			Bre		2517201	[+] 25172 18 ⊕ dual tyres
2.3 CDTI [RWD]	07/10→	107 / 146			92228600	ø 302 x 28 x 70				92228800	ø 305 x 12 x 71.5 ⊕ single tyre
					TPM0004					92230800	ø 302 x 18 x 50.9 ⊕ dual tyres
										TPM0004	
		737400	Bre		2514701	[+] 25147 18		Bos		2511201	[+] 25112 18.1 ⊕ single tyre
2.3 CDTI [RWD]	01/13→	110 / 150									
2.3 CDTI FWD	01/13→	110 / 150			92228600	ø 302 x 28 x 70		Bre		2517201	[+] 25172 18 ⊕ dual tyres
										92228800	ø 305 x 12 x 71.5 ⊕ single tyre
										92230800	ø 302 x 18 x 50.9 ⊕ dual tyres
		737500	Bre		2514701	[+] 25147 18		Bos		2511201	[+] 25112 18.1
2.3 CDTI FWD	05/10→	74 / 101									
2.3 CDTI FWD	05/10→	92 / 125	Bos		82076300					92228700	ø 305 x 12 x 71.5
2.3 CDTI FWD	05/10→	107 / 146			92228600	ø 302 x 28 x 70				TPM0004	
					TPM0004						
MOVANO Mk II (B) Combi 05/10→											
		737600	Bre		2514701	[+] 25147 18		Bos		2511201	[+] 25112 18.1
2.3 CDTI	05/10→	74 / 101									
2.3 CDTI	05/10→	92 / 125	Bos		82076300					92228700	ø 305 x 12 x 71.5
2.3 CDTI	05/10→	107 / 146			92228600	ø 302 x 28 x 70				TPM0004	
					TPM0004						
		737700	Bre		2514701	[+] 25147 18		Bos		2511201	[+] 25112 18.1 ⊕ single tyre
2.3 CDTI	01/13→	110 / 150									
					92228600	ø 302 x 28 x 70		Bre		2517201	[+] 25172 18 ⊕ dual tyres
										92228800	ø 305 x 12 x 71.5 ⊕ single tyre
										92230800	ø 302 x 18 x 50.9 ⊕ dual tyres
MOVANO Mk II (B) VAN 05/10→											
		737800	Bre		2514701	[+] 25147 18		Bos		2511201	[+] 25112 18.1 ⊕ single tyre
2.3 CDTI [RWD]	05/10→	74 / 101									
2.3 CDTI [RWD]	05/10→	92 / 125	Bos		82076300			Bre		2517201	[+] 25172 18 ⊕ dual tyres
2.3 CDTI [RWD]	05/10→	107 / 146									

T - Z

kW / hp

MOVANO Mk II (B) VAN 05/10→

737800													
2.3 CDTI [RWD]	05/10→	74 / 101			92228600	ø 302 x 28 x 70				92228800	ø 305 x 12 x 71.5	⊕ single tyre
2.3 CDTI [RWD]	05/10→	92 / 125								92230800	ø 302 x 18 x 50.9	⊕ dual tyres
2.3 CDTI [RWD]	05/10→	107 / 146			TPM0004					TPM0004		
737900			Bre		2514701	[+] 25147 18		Bos		2511201	[+] 25112 18.1	⊕ single tyre
2.3 CDTI [RWD]	01/13→	110 / 150										
2.3 CDTI FWD	01/13→	110 / 150			92228600	ø 302 x 28 x 70		Bre		2517201	[+] 25172 18	⊕ dual tyres
										92228800	ø 305 x 12 x 71.5	⊕ single tyre
										92230800	ø 302 x 18 x 50.9	⊕ dual tyres
738000			Bre		2514701	[+] 25147 18		Bos		2511201	[+] 25112 18.1	
2.3 CDTI FWD	05/10→	74 / 101										
2.3 CDTI FWD	05/10→	92 / 125	Bos		82076300					92228700	ø 305 x 12 x 71.5	
2.3 CDTI FWD	05/10→	107 / 146			92228600	ø 302 x 28 x 70				TPM0004		
					TPM0004							

OMEGA (B) 01/94→07/03

738100			Luc		2136801	[o] 21368 18.3	⊕ arm.veh. W1000001→	Ate		2105002	[–] 21050 15.2	
2.0	03/94→09/99	85 / 116										
2.0 16V	03/94→09/99	100 / 136	Ate		2141101	[o] 21411 17.5	→V1999999 ⊖ arm.veh.			82025800		
					98020000	L730	→V1999999 ⊖ arm.veh.		PRO	92067003	ø 286 x 12 x 69	
					98020100	L735	⊕ arm.veh. W1000001→			TPM0007		
										91018400	ø 160 x 24.5	
			Ate		82032000		→V1999999 ⊖ arm.veh.			97005600		
			Luc		82062800		⊕ arm.veh. W1000001→					
			Ate		82062900		→V1999999 ⊖ arm.veh.					
					92057700	ø 296 x 28 x 58.3	⊕ arm.veh. W1000001→					
				PRO	92066903	ø 286 x 24 x 58.4	→V1999999 ⊖ arm.veh.					
					TPM0007							
738200			Luc		2136801	[o] 21368 18.3		Ate		2105002	[–] 21050 15.2	
2.0 DTI 16V	01/98→09/00	74 / 101										
2.2 16V	01/94→06/03	106 / 144			98020100	L735		Ate		82025700		vented disc
2.2 DTI 16V	08/00→07/03	88 / 120								82025800		solid disc
2.5 DTI 24V	09/01→07/03	110 / 150										
2.5 TD	04/94→07/01	96 / 131	Luc		82062800							
2.5 V6	03/94→09/00	125 / 170										
2.6 V6	08/00→07/03	132 / 180			92057700	ø 296 x 28 x 58.3			PRO	92067003	ø 286 x 12 x 69	
3.0 V6	04/94→07/00	155 / 211										
3.2 V6	02/01→07/03	160 / 218			TPM0007					92144900	ø 286 x 20 x 69.5	
										TPM0007		
										91018400	ø 160 x 24.5	
										97005600		

OMEGA (B) Estate 02/94→06/03

738300			Luc		2136801	[o] 21368 18.3	⊕ arm.veh. W1000001→	Ate		2105002	[–] 21050 15.2	
2.0	03/94→09/99	85 / 116										
2.0 16V	03/94→02/01	100 / 136	Ate		2141101	[o] 21411 17.5	→V1999999 ⊖ arm.veh.			82025800		
					98020000	L730	→V1999999 ⊖ arm.veh.		PRO	92067003	ø 286 x 12 x 69	
					98020100	L735	⊕ arm.veh. W1000001→			TPM0007		
										91018400	ø 160 x 24.5	
			Ate		82032000		→V1999999 ⊖ arm.veh.			97005600		
			Luc		82062800		⊕ arm.veh. W1000001→					
			Ate		82062900		→V1999999 ⊖ arm.veh.					
					92057700	ø 296 x 28 x 58.3	⊕ arm.veh. W1000001→					
				PRO	92066903	ø 286 x 24 x 58.4	→V1999999 ⊖ arm.veh.					

T - Z

30 kW / hp

OMEGA (B) Estate 02/94→06/03

738300				TPM0007									
2.0	03/94→09/99	85 / 116											
2.0 16V	03/94→02/01	100 / 136											
738400			Luc	2136801	[o] 21368 18.3		Ate	2105002	[–] 21050 15.2				
2.0 DTI 16V	01/98→09/00	74 / 101											
2.2 16V	02/94→06/03	106 / 144		98020100	L735		Ate	82025700		vented disc			
2.2 DTI 16V	08/00→06/03	88 / 120											
2.5 DTI 24V	09/01→06/03	110 / 150	Luc	82062800				82025800		solid disc			
2.5 TD	04/94→07/01	96 / 131											
2.5 V6	03/94→09/00	125 / 170		92057700	ø 296 x 28 x 58.3			92067003	ø 286 x 12 x 69				
2.6 V6	08/00→06/03	132 / 180											
3.0 V6	07/94→07/00	155 / 211		TPM0007				92144900	ø 286 x 20 x 69.5				
3.2 V6	02/01→06/03	160 / 218						TPM0007					
								91018400	ø 160 x 24.5				
								97005600					

OMEGA (B) Kombi 02/94→06/03 → OMEGA (B) Estate, Page 1178

SIGNUM 01/02→10/08

738500			Ate	2373807	[o] 23738 20.6	→51999999 →58999999 ⊖ police veh. ⊖ sports susp.	Ate	2413701	[–] 24137 16.7				
1.8	06/03→07/05	90 / 122				→51066206 →48999999 ⊕ police veh. ⊕ sports susp.	Ate	2413781	[–] 24137 16.7				
			Ate	2415501	[o] 24155 20.6								
				98029100	L685	→48045597 →41048789	Ate	82062900					
				98031400	L287	41048790→ 48045598→	Ate	82503500					
			Ate	82032000		⊕ police veh. ⊕ sports susp. 51066207→ 58→		92118503	ø 278 x 12 x 41.5				
						⊖ police veh. ⊖ sports susp. 51064147→ 58→		92118403	ø 292 x 20 x 41.5				
			Ate	82055100		→51064146 →48999999 ⊖ police veh. ⊖ sports susp.		TPM0008					
			Ate	82062900									
			Ate	82501200		→51066206 →48999999 ⊕ police veh. ⊕ sports susp.							
				92118303	ø 302 x 28 x 45	⊕ sports susp.							
				92118703	ø 285 x 25 x 41.9	⊖ sports susp.							
				TPM0007									
738600			Ate	2373807	[o] 23738 20.6	→51999999 →58999999 ⊖ sports susp. ⊖ police veh.	Ate	2413701	[–] 24137 16.7				
1.8	08/05→05/08	103 / 140	Ate	2415501	[o] 24155 20.6	61000001→ 68→	Ate	2413781	[–] 24137 16.7				
				98029100	L685	→48045597 →41048789	Ate	82062900					
			Ate	82032000			Ate	82503500					
			Ate	82062900				92118503	ø 278 x 12 x 41.5				
				92118303	ø 302 x 28 x 45	⊕ police veh.		92118403	ø 292 x 20 x 41.5				
				92118703	ø 285 x 25 x 41.9	⊖ police veh.		TPM0008					
				TPM0007									
738700			Ate	2373807	[o] 23738 20.6		Ate	2413701	[–] 24137 16.7				
1.9 CDTI	04/04→03/08	88 / 120		98029100	L685	→48045597 →41048789	Ate	2413781	[–] 24137 16.7				
1.9 CDTI 16V	04/04→03/08	110 / 150		98031400	L287	41048790→ 48045598→	Ate	82062900					
			Ate	82032000		54064147→ 58→ ⊖ police veh. ⊖ sports susp.	Ate	82503500					
						51066207→ 58→ ⊕ police veh. ⊕ sports susp.		92118503	ø 278 x 12 x 41.5				
			Ate	82055100		→51064146 →48999999 ⊖ police veh. ⊖ sports susp.		92118403	ø 292 x 20 x 41.5				
			Ate	82062900				TPM0008					
			Ate	82501200		→51066206 →48999999 ⊕ police veh. ⊕ sports susp.							
				92118303	ø 302 x 28 x 45	⊕ police veh. ⊕ sports susp.							

T - Z

30 kW / hp

SIGNUM 01/02→10/08

1.9 CDTI 1.9 CDTI 16V	04/04→03/08 04/04→03/08	738700 88 / 120 110 / 150		PRO	92118703	ø 285 x 25 x 41.9	⊕ sports susp. ⊕ police veh.				
					TPM0007						
1.9 Turbo 2.0 DTI	01/05→05/08 05/03→05/08	738800 74 / 101 74 / 100	Ate		2373807	[o] 23738 20.6		Ate		2413701	[–] 24137 16.7
					98029100	L685	→48045597 →41048789	Ate	epad	2413781	[–] 24137 16.7
					98031400	L287	41048790→ 48045598→	Ate		82062900	
			Ate		82032000		51064147→ 58→	Ate		82503500	
			Ate		82055100		→51064146 →48999999		PRO	92118503	ø 278 x 12 x 41.5
			Ate		82062900				PRO	92118403	ø 292 x 20 x 41.5
				PRO	92118703	ø 285 x 25 x 41.9				TPM0008	
					TPM0007						
2.0 i Turbo	01/02→10/08	738900 129 / 175	Ate		2373807	[o] 23738 20.6	→51066206 →48999999	Ate		2413701	[–] 24137 16.7
			Ate		2415501	[o] 24155 20.6		Ate	epad	2413781	[–] 24137 16.7
					98029100	L685	→48045597 →41048789	Ate		82062900	
			Ate		82032000		51066207→ 58→	Ate		82503500	
			Ate		82062900				PRO	92118503	ø 278 x 12 x 41.5
			Ate		82501200		→51066206 →48999999		PRO	92118403	ø 292 x 20 x 41.5
				PRO	92118303	ø 302 x 28 x 45				TPM0008	
					TPM0007						
2.2 DTI	05/03→05/08	739000 92 / 125	Ate		2373807	[o] 23738 20.6	⊖ police veh. →58999999 →51066206	Ate		2413701	[–] 24137 16.7
			Ate		2415501	[o] 24155 20.6	51066207→ →51999999 →58999999	Ate	epad	2413781	[–] 24137 16.7
					98029100	L685	→48045597 →41048789	Ate		82062900	
					98031400	L287	41048790→ 48045598→	Ate		82503500	
			Ate		82032000		51064147→ 58→ 51066207→ 58→ ⊕ sports susp.		PRO	92118503	ø 278 x 12 x 41.5
			Ate		82055100		→51064146 →48999999 ⊖ sports susp.		PRO	92118403	ø 292 x 20 x 41.5
			Ate		82062900					TPM0008	
			Ate		82501200		→51066206 →48999999 ⊕ sports susp.				
				PRO	92118303	ø 302 x 28 x 45	⊕ sports susp.				
				PRO	92118703	ø 285 x 25 x 41.9	⊖ sports susp.				
					TPM0007						
2.2 i	05/03→05/08	739100 114 / 155	Ate		2373807	[o] 23738 20.6	→51999999 →58999999 ⊖ police veh. ⊖ sports susp. →51066206 →48999999	Ate		2413701	[–] 24137 16.7
			Ate		2415501	[o] 24155 20.6		Ate	epad	2413781	[–] 24137 16.7
					98029100	L685	→48045597 →41048789	Ate		82062900	
			Ate		82032000		51064147→ 58→ 51066207→ 58→ ⊕ sports susp.	Ate		82503500	
			Ate		82055100		→51064146 →48999999 ⊖ sports susp.		PRO	92118503	ø 278 x 12 x 41.5
			Ate		82062900				PRO	92118403	ø 292 x 20 x 41.5
			Ate		82501200		→51066206 →48999999 ⊕ sports susp.			TPM0008	
				PRO	92118303	ø 302 x 28 x 45	⊕ sports susp.				
				PRO	92118703	ø 285 x 25 x 41.9	⊖ sports susp.				
					TPM0007						
2.8 V6 Turbo	04/02→05/08	739200 169 / 230	Ate		2391202	[–] 23912 20.4		Ate		2413701	[–] 24137 16.7

T - Z

		kW / hp										
SIGNUM 01/02→10/08												
2.8 V6 Turbo	04/02→05/08	739200 169 / 230		98030100	L302		Ate	2413781	[–] 24137 16.7	
			Ate	82062900			Ate	82062900		
			Ate	82071800			Ate	82503500		
			PRO	92118803	ø 314 x 28 x 44.9	⊖ OPC, VRX 61000001→	PRO	92118503	ø 278 x 12 x 41.5	
			PRO	92242403	ø 345 x 30 x 45.4	⊕ OPC, VRX 61000001→	PRO	92118403	ø 292 x 20 x 41.5	
				TPM0007				TPM0008		
2.8 V6 Turbo	05/07→10/08	739300 184 / 250	Ate	2391202	[–] 23912 20.4	⊕ OPC, VXR 61000001→	Ate	2413701	[–] 24137 16.7	
			Ate	2022401	[o] 20224 20.9	⊖ OPC, VXR 61000001→	Ate	2413781	[–] 24137 16.7	
			Ate	82071800			Ate	82503500		
			PRO	92118803	ø 314 x 28 x 44.9	⊖ OPC, VXR 61000001→	PRO	92118503	ø 278 x 12 x 41.5	
			PRO	92242403	ø 345 x 30 x 45.4	⊕ OPC, VXR 61000001→	PRO	92118403	ø 292 x 20 x 41.5	
				TPM0007						
3.0 CDTi	05/03→05/08	739400 130 / 177	Ate	2022401	[o] 20224 20.9	31070294→ 38047798→ →51999999 →58999999	Ate	2413701	[–] 24137 16.7	
3.2 V6	05/03→05/08	155 / 211	Ate	2340404	[o] 23404 20.4	⊕ GB ⊕ police veh.	Ate	2413781	[–] 24137 16.7	
			Ate	2373807	[o] 23738 20.6	→31070293 →38047797	Ate	82062900		
				98029700	L693	→48045597 →41048789 38047798→ 31070294→	Ate	82503500		
				98030100	L302	48045598→ 41048790→	PRO	92118503	ø 278 x 12 x 41.5	
			Ate	82062900			PRO	92118403	ø 292 x 20 x 41.5	
			Ate	82501200				TPM0008		
			PRO	92118303	ø 302 x 28 x 45	→31070293 →38047797				
			PRO	92118803	ø 314 x 28 x 44.9	→51999999 →58999999 31070294→ 38047798→				
				TPM0007						
3.0 V6 CDTI	04/02→05/08	739500 135 / 184	Ate	2022401	[o] 20224 20.9		Ate	2413701	[–] 24137 16.7	
				98030100	L302	48045598→ 41048790→	Ate	2413781	[–] 24137 16.7	
			Ate	82062900			Ate	82062900		
			Ate	82071800			Ate	82503500		
			PRO	92118803	ø 314 x 28 x 44.9		PRO	92118503	ø 278 x 12 x 41.5	
				TPM0007			PRO	92118403	ø 292 x 20 x 41.5	
								TPM0008		
SINTRA 11/96→04/99										
2.2 DTI	07/97→04/99	739600 85 / 116	Wag	2335801	[+] 23358 18		Ake	2336101	[+] 23361 15	
2.2 i 16 V	11/96→04/99	104 / 141		92091500	ø 278 x 32 x 52			92099800	ø 278 x 11 x 50.5	
3.0 i 24V	11/96→04/99	148 / 201						91075100	ø 225 x 45	
SPEEDSTER 03/01→09/06										
2.2	03/01→09/06	739700 108 / 147	Ate	2032306	[–] 20323 14.5		Bre	2041003	[–] 20410 12.9	
			PRO	92075603	ø 288 x 25 x 42		PRO	92075603	ø 288 x 25 x 42	
				TPM0007				TPM0007		
TIGRA Mk I (F07) 07/94→12/00										
1.4 16V	07/94→12/00	739800 66 / 90	Ate	2054701	[o] 20547 16.8			91044800	ø 200 x 28	
			Ate	82030600				97008200		
			Ate	82062900				84044801	bore ø 19 ø 200 x 28	

T - Z

		kW / hp											
TIGRA Mk I (F07) 07/94→12/00													
1.4 16V	07/94→12/00	739800 66 / 90		PRO	92029603	ø 236 x 20 x 41				94009900	ø 200,0 x 34	⊖ ABS
				PRO	92056503	ø 256 x 20 x 41				94022300	ø 200,0 x 34	⊕ ABS
1.6 16V	07/94→12/00	739900 78 / 106	Ate		2054701	[o] 20547 16.8				91044800	ø 200 x 28	
			Ate		82030600					97008200		
			Ate		82062900					84044801	bore ø 19 ø 200 x 28	
				PRO	92056503	ø 256 x 20 x 41				94009900	ø 200,0 x 34	⊖ ABS
										94022300	ø 200,0 x 34	⊕ ABS
TIGRA TwinTop 06/04→08/09													
1.3 CDTI	06/04→08/09	740000 51 / 69	Luc		2322501	[+] 23225 17		Luc		2328404	[+] 23284 14	⊕ rear disc brake
1.4	06/04→08/09	66 / 90										
1.8	06/04→08/09	92 / 125	Luc		82060200			Luc		82060100		
				PRO	92111103	ø 260 x 24 x 41		Luc		82063300		
					TPM0008					91058200	ø 200 x 46	⊕ rear drum brake
										84058200	bore ø 19 ø 200 x 45	⊕ rear drum brake
									PRO	92111003	ø 240 x 10.2 x 40.5	⊕ rear disc brake
										TPM0008		
										94024200	ø 200,0 x 52	⊕ rear drum brake
VECTRA (B) 08/95→03/02													
1.6 i	08/95→10/01	740100 55 / 75	Ate		2186201	[o] 21862 18.3	→W-999999 XL000001→ →XL999999	Ate		2105002	[–] 21050 15.2	⊕ rear disc brake
2.0 DI 16V	08/95→10/01	60 / 82	Ate		2311502	[o] 23115 19.6	X-000001→	Ate		82025700		
					98021100	L660	 X-000001→	Ate		82062900		
					98021200	L660	 →W1999999 →W5999999 →W7999999 XL000001→ →XL999999	Luc		91049000	ø 230 x 42	⊕ rear drum brake
										97011800		⊕ rear drum brake
			Ate		82028900		→W1999999 →W5999999 →W7999999 XL000001→ →XL999999			84049002	bore ø 20.6 ø 230 x 42	08/98→
			Ate		82032000		X-000001→		PRO	92075503	ø 270 x 10 x 69.2	⊕ rear disc brake
			Ate		82062900					94020300	ø 230,0 x 50.2	⊕ rear drum brake →W-999999
				PRO	92039203	ø 256 x 24 x 41	→W1999999 →W5999999 →W7999999 XL00001→			94022600	ø 230,0 x 49.5	⊕ rear drum brake X-000001→
				PRO	92075603	ø 288 x 25 x 42	X1000001→ X7000001→			91018400	ø 160 x 24.5	⊕ rear disc brake
										97008400		
1.6 i 16V	08/95→10/01	740200 74 / 100	Ate		2186201	[o] 21862 18.3	→W-999999 XL000001→ →XL999999	Ate		2105002	[–] 21050 15.2	
1.8 i 16V	10/95→09/00	85 / 116	Ate		2311502	[o] 23115 19.6	X-000001→	Ate		82025700		
1.8 i 16V	09/00→03/02	92 / 125			98021100	L660	 X-000001→	Ate		82062900		
2.0 DTI 16V	08/95→10/01	74 / 101			98021200	L660	 →W1999999 →W5999999 →W7999999 XL000001→ →XL999999		PRO	92075503	ø 270 x 10 x 69.2	⊕ rim 4 hole
									PRO	92075703	ø 286 x 10 x 69.2	⊕ rim 5 hole
			Ate		82028900		→W1999999 →W5999999 →W7999999 XL000001→ →XL999999			91018400	ø 160 x 24.5	
			Ate		82032000		X-000001→			97008400		
			Ate		82062900							
				PRO	92039203	ø 256 x 24 x 41	→W1999999 →W5999999 →W7999999 XL00001→					
				PRO	92075603	ø 288 x 25 x 42	X1000001→ X7000001→					
1.8 Dualfuel	09/00→03/02	740300 92 / 125	Ate		2186201	[o] 21862 18.3	XL000001→	Ate		2105002	[–] 21050 15.2	
			Ate		2311502	[o] 23115 19.6	X1000001→ X7000001→ YL000001→		PRO	92075503	ø 270 x 10 x 69.2	

T - Z

kW / hp

VECTRA (B) 08/95→03/02

740300												
1.8 Dualfuel	09/00→03/02	92 / 125	Ate		82032000				PRO	92075703	ø 286 x 10 x 69.2	
					92005400	ø 238 x 11 x 55.5	⊕ GSI			91018400	ø 160 x 24.5	
				PRO	92039203	ø 256 x 24 x 41	⊕ CN					
				PRO	92075603	ø 288 x 25 x 42						
					TPM0007		⊕ rim 5 hole					
740400			Ate		2311502	[o] 23115 19.6		Ate		2105002	[–] 21050 15.2	
2.0 i 16V	10/95→01/01	100 / 136			98021100	L660		Ate		82025700		
2.2 i 16V	08/95→10/01	108 / 147	Ate		82032000			Ate		82062900		
2.5 i GSi	03/98→07/00	143 / 194	Ate		82062900				PRO	92075703	ø 286 x 10 x 69.2	
2.5 i V6	09/95→08/00	125 / 170		PRO	92075603	ø 288 x 25 x 42				91018400	ø 160 x 24.5	
2.6 i V6	09/00→03/02	125 / 170								97008400		
740500			Ate		2311502	[o] 23115 19.6		Ate		2105002	[–] 21050 15.2	
2.2 DTI 16V	08/95→10/01	92 / 125			98021100	L660		Ate		82025700		
			Ate		82032000			Ate		82062900		
			Ate		82062900				PRO	92075503	ø 270 x 10 x 69.2	⊕ rim 4 hole
				PRO	92075603	ø 288 x 25 x 42			PRO	92075703	ø 286 x 10 x 69.2	⊕ rim 5 hole
										91018400	ø 160 x 24.5	
										97008400		

VECTRA (B) Estate 08/95→03/02

740600			Ate		2186201	[o] 21862 18.3	XL000001→	Ate		2105002	[–] 21050 15.2	
1.8 Dualfuel	09/00→03/02	92 / 125	Ate		2311502	[o] 23115 19.6	X1000001→ X7000001→ YL000001→		PRO	92075503	ø 270 x 10 x 69.2	
			Ate		82032000				PRO	92075703	ø 286 x 10 x 69.2	
					92005400	ø 238 x 11 x 55.5	⊕ GSI			91018400	ø 160 x 24.5	
				PRO	92039203	ø 256 x 24 x 41	⊕ CN					
				PRO	92075603	ø 288 x 25 x 42						
					TPM0007		⊕ rim 5 hole					
740700			Ate		2186201	[o] 21862 18.3	→W-999999	Ate		2105002	[–] 21050 15.2	
1.8 i 16V	11/96→09/00	85 / 115					XL000001→ →XL999999					
1.8 i 16V	09/00→03/02	92 / 125	Ate		2311502	[o] 23115 19.6	X-000001→	Ate		82025700		
2.0 DTI 16V	08/95→10/01	74 / 101			98021100	L660		Ate		82062900		
							X-000001→		PRO	92075503	ø 270 x 10 x 69.2	⊕ rim 4 hole
					98021200	L660			PRO	92075703	ø 286 x 10 x 69.2	⊕ rim 5 hole
							→W1999999 →W5999999 →W7999999					
							XL000001→ →XL999999					
			Ate		82028900		→W1999999 →W5999999 →W7999999			91018400	ø 160 x 24.5	
							XL000001→ →XL999999					
			Ate		82032000		X-000001→			97008400		
			Ate		82062900							
				PRO	92039203	ø 256 x 24 x 41	→W1999999 →W5999999 →W7999999					
							XL00001→					
				PRO	92075603	ø 288 x 25 x 42	X1000001→ X7000001→					
740800			Ate		2186201	[o] 21862 18.3	→W-999999	Ate		2105002	[–] 21050 15.2	⊕ rear disc brake
2.0 DI 16V	08/95→10/01	60 / 82					XL000001→ →XL999999					
			Ate		2311502	[o] 23115 19.6	X-000001→	Ate		82025700		
					98021100	L660		Ate		82062900		
							X-000001→	Luc		91049000	ø 230 x 42	⊕ rear drum brake

T - Z

		kW / hp										
VECTRA (B) Estate 08/95→03/02												
		740800		98021200	L660			97011800		⊕ rear drum brake		
2.0 DI 16V	08/95→10/01	60 / 82				→W1999999 →W5999999 →W7999999						
			PRO	92075503	ø 270 x 10 x 69.2	⊕ rear disc brake						
			Ate	82028900		→W1999999 →W5999999 →W7999999		94020300	ø 230,0 x 50.2	⊕ rear drum brake →W-999999		
						XL000001→ →XL999999						
			Ate	82032000		X-000001→		94022600	ø 230,0 x 49.5	⊕ rear drum brake X-000001→		
			Ate	82062900				91018400	ø 160 x 24.5	⊕ rear disc brake		
			PRO	92039203	ø 256 x 24 x 41	→W1999999 →W5999999 →W7999999		97008400				
						XL00001→						
			PRO	92075603	ø 288 x 25 x 42	X1000001→ X7000001→						
		740900	Ate	2311502	[o] 23115 19.6		Ate	2105002	[–] 21050 15.2			
2.0 i 16V	10/95→01/01	100 / 136		98021100	L660		Ate	82025700				
2.2 i 16V	08/95→10/01	108 / 147										
2.5 i GSi	05/98→09/99	143 / 194										
2.5 i V6	11/96→08/00	125 / 170	Ate	82032000			Ate	82062900				
2.6 i V6	09/00→03/02	125 / 170	Ate	82062900			PRO	92075703	ø 286 x 10 x 69.2			
			PRO	92075603	ø 288 x 25 x 42			91018400	ø 160 x 24.5			
								97008400				
		741000	Ate	2311502	[o] 23115 19.6		Ate	2105002	[–] 21050 15.2			
2.2 DTI 16V	08/95→10/01	92 / 125		98021100	L660		Ate	82025700				
			Ate	82032000			Ate	82062900				
			Ate	82062900			PRO	92075503	ø 270 x 10 x 69.2	⊕ rim 4 hole		
			PRO	92075603	ø 288 x 25 x 42		PRO	92075703	ø 286 x 10 x 69.2	⊕ rim 5 hole		
								91018400	ø 160 x 24.5			
								97008400				
VECTRA (B) Hatchback 08/95→07/03												
		741100	Ate	2186201	[o] 21862 18.3	→W-999999	Ate	2105002	[–] 21050 15.2	⊕ rear disc brake		
1.6 i	08/95→10/01	55 / 75				XL000001→ →XL999999						
2.0 Di 16V	08/95→10/01	60 / 82	Ate	2311502	[o] 23115 19.6	X-000001→	Ate	82025700				
				98021100	L660		Ate	82062900				
						X-000001→						
				98021200	L660		Luc	91049000	ø 230 x 42	⊕ rear drum brake		
						→W1999999 →W5999999 →W7999999		97011800		⊕ rear drum brake		
						XL000001→ →XL999999						
			Ate	82028900		→W1999999 →W5999999 →W7999999		84049002	bore ø 20.6 ø 230 x 42	08/98→		
						XL000001→ →XL999999						
			Ate	82032000		X-000001→	PRO	92075503	ø 270 x 10 x 69.2	⊕ rear disc brake		
			Ate	82062900				94020300	ø 230,0 x 50.2	⊕ rear drum brake →W-999999		
			PRO	92039203	ø 256 x 24 x 41	→W1999999 →W5999999 →W7999999		94022600	ø 230,0 x 49.5	⊕ rear drum brake X-000001→		
						XL00001→		91018400	ø 160 x 24.5	⊕ rear disc brake		
			PRO	92075603	ø 288 x 25 x 42	X1000001→ X7000001→		97008400				
		741200	Ate	2186201	[o] 21862 18.3	→W-999999	Ate	2105002	[–] 21050 15.2			
1.6 i 16V	08/95→10/01	74 / 101				XL000001→ →XL999999						
1.8 i 16V	10/95→09/00	85 / 116	Ate	2311502	[o] 23115 19.6	X-000001→	Ate	82025700				
1.8 i 16V	09/00→07/03	92 / 125		98021100	L660		Ate	82062900				
2.0 DTi 16V	06/97→10/01	74 / 101				X-000001→						
				98021200	L660		PRO	92075503	ø 270 x 10 x 69.2	⊕ rim 4 hole		
						→W1999999 →W5999999 →W7999999	PRO	92075703	ø 286 x 10 x 69.2	⊕ rim 5 hole		
						XL000001→ →XL999999						
			Ate	82028900		→W1999999 →W5999999 →W7999999		91018400	ø 160 x 24.5			
						XL000001→ →XL999999						
			Ate	82032000		X-000001→		97008400				
			Ate	82062900								

T - Z

kW / hp

VECTRA (B) Hatchback 08/95→07/03

741200

1.6 i 16V	08/95→10/01	74 / 101		PRO	92039203	ø 256 x 24 x 41	→W1999999 →W5999999 →W7999999 XL00001→						
1.8 i 16V	10/95→09/00	85 / 116											
1.8 i 16V	09/00→07/03	92 / 125		PRO	92075603	ø 288 x 25 x 42	X1000001→ X7000001→						
2.0 DTi 16V	06/97→10/01	74 / 101											

741300

1.8 Dualfuel	09/00→07/03	92 / 125	Ate		2186201	[o] 21862 18.3	XL000001→	Ate		2105002	[–] 21050 15.2	
			Ate		2311502	[o] 23115 19.6	X1000001→ X7000001→ YL000001→		PRO	92075503	ø 270 x 10 x 69.2	
			Ate		82032000				PRO	92075703	ø 286 x 10 x 69.2	
					92005400	ø 238 x 11 x 55.5	⊕ GSI			91018400	ø 160 x 24.5	
				PRO	92039203	ø 256 x 24 x 41	⊕ CN					
				PRO	92075603	ø 288 x 25 x 42						
					TPM0007		⊕ rim 5 hole					

741400

2.0 i 16V	10/95→01/01	100 / 136	Ate		2311502	[o] 23115 19.6		Ate		2105002	[–] 21050 15.2	
2.2 i 16V	09/00→07/03	108 / 147			98021100	L660		Ate		82025700		
2.5 i GSi	03/98→07/00	143 / 194	Ate		82032000			Ate		82062900		
2.5 i V6	09/95→08/00	125 / 170	Ate		82062900				PRO	92075703	ø 286 x 10 x 69.2	
2.6 i V6	09/00→07/03	125 / 170		PRO	92075603	ø 288 x 25 x 42				91018400	ø 160 x 24.5	
										97008400		

741500

2.2 DTI 16V	08/95→10/01	92 / 125	Ate		2311502	[o] 23115 19.6		Ate		2105002	[–] 21050 15.2	
					98021100	L660		Ate		82025700		
			Ate		82032000			Ate		82062900		
			Ate		82062900				PRO	92075503	ø 270 x 10 x 69.2	⊕ rim 4 hole
				PRO	92075603	ø 288 x 25 x 42			PRO	92075703	ø 286 x 10 x 69.2	⊕ rim 5 hole
										91018400	ø 160 x 24.5	
										97008400		

VECTRA (B) Kombi 08/95→03/02 → VECTRA (B) Estate, Page 1183

VECTRA (B) Schrägheck 08/95→07/03 → VECTRA (B) Hatchback, Page 1184

VECTRA Mk II (C) 01/00→10/08

741600

1.8	01/06→07/08	103 / 140	Ate		2373807	[o] 23738 20.6	⊖ police veh. ⊖ sports susp. →51999999 →58999999	Ate		2413701	[–] 24137 16.7	
			Ate		2415501	[o] 24155 20.6	61000001→ 68→	Ate	epad	2413781	[–] 24137 16.7	
					98029100	L685	→48045597 →41048789	Ate		82062900		
			Ate		82032000			Ate		82503500		
			Ate		82062900				PRO	92118503	ø 278 x 12 x 41.5	
				PRO	92118303	ø 302 x 28 x 45	⊕ police veh.		PRO	92118403	ø 292 x 20 x 41.5	
				PRO	92118703	ø 285 x 25 x 41.9	⊖ police veh.			TPM0008		
					TPM0007							

741700

1.8 16V	04/02→07/08	90 / 122	Ate		2373807	[o] 23738 20.6	→51999999 →58999999 ⊖ police veh. ⊖ sports susp.	Ate		2413701	[–] 24137 16.7	
1.8 16V Dualfuel	04/02→07/08	90 / 122					→51066206 →48999999 ⊕ police veh. ⊕ sports susp.	Ate	epad	2413781	[–] 24137 16.7	
			Ate		2415501	[o] 24155 20.6		Ate		82062900		
					98029100	L685	→48045597 →41048789	Ate		82503500		
					98031400	L287	41048790→ 48045598→		PRO	92118503	ø 278 x 12 x 41.5	
			Ate		82032000		⊕ police veh. ⊕ sports susp. 51066207→ 58→ ⊖ police veh. ⊖ sports susp. 51064147→ 58→		PRO	92118403	ø 292 x 20 x 41.5	
			Ate		82055100		→51064146 →48999999 ⊖ police veh. ⊖ sports susp.			TPM0008		

T - Z

VECTRA Mk II (C) 01/00→10/08

		kW / hp										
741700			Ate	82062900								
1.8 16V	04/02→07/08	90 / 122										
1.8 16V Dualfuel	04/02→07/08	90 / 122	Ate	82501200		→51066206 →48999999 ⊕ police veh. ⊕ sports susp.						
			PRO	92118303	ø 302 x 28 x 45	⊕ sports susp.						
			PRO	92118703	ø 285 x 25 x 41.9	⊖ sports susp.						
				TPM0007								
741800			Ate	2373807	[o] 23738 20.6		Ate	2413701	[–] 24137 16.7			
1.9 CDTI	04/02→09/08	88 / 120										
1.9 CDTI 16V	04/04→08/08	110 / 150		98029100	L685	→48045597 →41048789	Ate epad	2413781	[–] 24137 16.7			
				98031400	L287	41048790→ 48045598→	Ate	82062900				
			Ate	82032000		54064147→ 58→ ⊖ police veh. ⊖ sports susp.	Ate	82503500				
						51066207→ 58→ ⊕ police veh. ⊕ sports susp.	PRO	92118503	ø 278 x 12 x 41.5			
			Ate	82055100		→51064146 →48999999 ⊖ police veh. ⊖ sports susp.	PRO	92118403	ø 292 x 20 x 41.5			
			Ate	82062900								
			Ate	82501200		→51066206 →48999999 ⊕ police veh. ⊕ sports susp.		TPM0008				
			PRO	92118303	ø 302 x 28 x 45	⊕ police veh. ⊕ sports susp.						
			PRO	92118703	ø 285 x 25 x 41.9	⊕ sports susp. ⊕ police veh.						
				TPM0007								
741900			Ate	2373807	[o] 23738 20.6	→51066206 →48999999	Ate	2413701	[–] 24137 16.7			
2.0 16V Turbo	01/00→10/08	129 / 175	Ate	2415501	[o] 24155 20.6		Ate epad	2413781	[–] 24137 16.7			
				98029100	L685	→48045597 →41048789	Ate	82062900				
			Ate	82032000		51066207→ 58→	Ate	82503500				
			Ate	82062900			PRO	92118503	ø 278 x 12 x 41.5			
			Ate	82501200		→51066206 →48999999	PRO	92118403	ø 292 x 20 x 41.5			
			PRO	92118303	ø 302 x 28 x 45			TPM0008				
				TPM0007								
742000			Ate	2373807	[o] 23738 20.6	⊖ police veh. ⊖ sports susp. →51999999 →58999999	Ate	2413701	[–] 24137 16.7			
2.0 DTI 16V	04/02→10/08	74 / 101		98029100	L685	→48045597 →41048789	Ate epad	2413781	[–] 24137 16.7			
			Ate	82032000		51064147→ 58→ ⊖ police veh. →51064146 →48999999 ⊖ sports susp. ⊕ police veh.	Ate	82062900				
			Ate	82055100		→51064146 →48999999	Ate	82503500				
			Ate	82062900			PRO	92118503	ø 278 x 12 x 41.5			
			PRO	92118703	ø 285 x 25 x 41.9	→51999999 →58999999	PRO	92118403	ø 292 x 20 x 41.5			
				TPM0007				TPM0008				
742100			Ate	2373807	[o] 23738 20.6	→51999999 →58999999 ⊖ police veh. ⊖ sports susp. →51066206 →48999999	Ate	2413701	[–] 24137 16.7			
2.2 16V	01/02→10/08	108 / 147	Ate	2415501	[o] 24155 20.6		Ate epad	2413781	[–] 24137 16.7			
2.2 direct	01/02→10/08	114 / 155		98029100	L685	→48045597 →41048789	Ate	82062900				
			Ate	82032000		51064147→ 58→ 51066207→ 58→ ⊕ sports susp.	Ate	82503500				
			Ate	82055100		→51064146 →48999999 ⊖ sports susp.	PRO	92118503	ø 278 x 12 x 41.5			
			Ate	82062900			PRO	92118403	ø 292 x 20 x 41.5			
			Ate	82501200		→51066206 →48999999 ⊕ sports susp.		TPM0008				
			PRO	92118303	ø 302 x 28 x 45	⊕ sports susp.						
			PRO	92118703	ø 285 x 25 x 41.9	⊖ sports susp.						

T - Z

VECTRA Mk II (C) 01/00→10/08

2.2 16V 2.2 direct	01/02→10/08 01/02→10/08	742100 108 / 147 114 / 155			TPM0007							
2.2 DTI 16V	04/02→10/08	742200 92 / 125	Ate		2373807	[o] 23738 20.6	⊖ police veh. →58999999 →51066206	Ate		2413701	[–] 24137 16.7	
			Ate		2415501	[o] 24155 20.6	51066207→ →51999999 →58999999	Ate	epad	2413781	[–] 24137 16.7	
					98029100	L685	→48045597 →41048789	Ate		82062900		
					98031400	L287	41048790→ 48045598→	Ate		82503500		
			Ate		82032000		51064147→ 58→ 51066207→ 58→ ⊕ sports susp.		PRO	92118503	ø 278 x 12 x 41.5	
			Ate		82055100		→51064146 →48999999 ⊖ sports susp.		PRO	92118403	ø 292 x 20 x 41.5	
			Ate		82062900					TPM0008		
			Ate		82501200		→51066206 →48999999 ⊕ sports susp.					
				PRO	92118303	ø 302 x 28 x 45	⊕ sports susp.					
				PRO	92118703	ø 285 x 25 x 41.9	⊖ sports susp.					
					TPM0007							
3.0 CDTi	08/05→07/08	742300 135 / 184	Ate		2022401	[o] 20224 20.9		Ate		2413701	[–] 24137 16.7	
					98030100	L302	48045598→ 41048790→	Ate	epad	2413781	[–] 24137 16.7	
			Ate		82062900			Ate		82062900		
			Ate		82071800			Ate		82503500		
				PRO	92118803	ø 314 x 28 x 44.9			PRO	92118503	ø 278 x 12 x 41.5	
					TPM0007				PRO	92118403	ø 292 x 20 x 41.5	
										TPM0008		
3.0 V6 CDTI 3.2 V6	06/03→08/05 06/03→07/08	742400 130 / 177 155 / 211	Ate		2022401	[o] 20224 20.9	31070294→ 38047798→ →51999999 →58999999	Ate		2413701	[–] 24137 16.7	
			Ate		2340404	[o] 23404 20.4	⊕ GB ⊕ police veh.	Ate	epad	2413781	[–] 24137 16.7	
			Ate		2373807	[o] 23738 20.6	→31070293 →38047797	Ate		82062900		
					98029700	L693	→48045597 →41048789 38047798→ 31070294→	Ate		82503500		
					98030100	L302	48045598→ 41048790→		PRO	92118503	ø 278 x 12 x 41.5	
			Ate		82062900				PRO	92118403	ø 292 x 20 x 41.5	
			Ate		82501200					TPM0008		
				PRO	92118303	ø 302 x 28 x 45	→31070293 →38047797					
				PRO	92118803	ø 314 x 28 x 44.9	→51999999 →58999999 31070294→ 38047798→					
					TPM0007							

VECTRA Mk II (C) Estate 10/03→07/08

1.8	01/06→07/08	742500 103 / 140	Ate		2373807	[o] 23738 20.6	⊖ police veh. ⊖ sports susp. →51999999 →58999999	Ate		2413701	[–] 24137 16.7	
			Ate		2415501	[o] 24155 20.6	61000001→ 68→	Ate	epad	2413781	[–] 24137 16.7	
					98029100	L685	→48045597 →41048789	Ate		82062900		
			Ate		82032000			Ate		82503500		
			Ate		82062900				PRO	92118503	ø 278 x 12 x 41.5	
				PRO	92118303	ø 302 x 28 x 45	⊕ police veh.		PRO	92118403	ø 292 x 20 x 41.5	
				PRO	92118703	ø 285 x 25 x 41.9	⊖ police veh.			TPM0008		
					TPM0007							
1.8 16V	10/03→08/05	742600 90 / 122	Ate		2373807	[o] 23738 20.6	→51999999 →58999999 ⊖ police veh. ⊖ sports susp. →51066206 →48999999 ⊕ police veh. ⊕ sports susp.	Ate		2413701	[–] 24137 16.7	
								Ate	epad	2413781	[–] 24137 16.7	

T - Z

		kW / hp									
VECTRA Mk II (C) Estate 10/03→07/08											
742600			Ate		**2415501**	[o] 24155 20.6		Ate		**82062900**	
1.8 16V	10/03→08/05	90 / 122			**98029100**	L685	→48045597 →41048789	Ate		**82503500**	
					98031400	L287	41048790→ 48045598→		PRO	**92118503**	ø 278 x 12 x 41.5
			Ate		**82032000**		⊕ police veh. ⊕ sports susp. 51066207→ 58→		PRO	**92118403**	ø 292 x 20 x 41.5
							⊖ police veh. ⊖ sports susp. 51064147→ 58→			**TPM0008**	
			Ate		**82055100**		→51064146 →48999999 ⊖ police veh. ⊖ sports susp.				
			Ate		**82062900**						
			Ate		**82501200**		→51066206 →48999999 ⊕ police veh. ⊕ sports susp.				
				PRO	**92118303**	ø 302 x 28 x 45	⊕ sports susp.				
				PRO	**92118703**	ø 285 x 25 x 41.9	⊖ sports susp.				
					TPM0007						
742700			Ate		**2373807**	[o] 23738 20.6		Ate		**2413701**	[–] 24137 16.7
1.9 CDTI	04/04→07/08	88 / 120			**98029100**	L685	→48045597 →41048789	Ate	epad	**2413781**	[–] 24137 16.7
1.9 CDTI 16V	04/04→07/08	110 / 150			**98031400**	L287	41048790→ 48045598→	Ate		**82062900**	
			Ate		**82032000**		54064147→ 58→ ⊖ police veh. ⊖ sports susp.	Ate		**82503500**	
							51066207→ 58→ ⊕ police veh. ⊕ sports susp.		PRO	**92118503**	ø 278 x 12 x 41.5
			Ate		**82055100**		→51064146 →48999999 ⊖ police veh. ⊖ sports susp.		PRO	**92118403**	ø 292 x 20 x 41.5
			Ate		**82062900**					**TPM0008**	
			Ate		**82501200**		→51066206 →48999999 ⊕ police veh. ⊕ sports susp.				
				PRO	**92118303**	ø 302 x 28 x 45	⊕ police veh. ⊕ sports susp.				
				PRO	**92118703**	ø 285 x 25 x 41.9	⊕ sports susp. ⊕ police veh.				
					TPM0007						
742800			Ate		**2373807**	[o] 23738 20.6	→51066206 →48999999	Ate		**2413701**	[–] 24137 16.7
2.0 16V Turbo	10/03→07/08	129 / 175	Ate		**2415501**	[o] 24155 20.6		Ate	epad	**2413781**	[–] 24137 16.7
					98029100	L685	→48045597 →41048789	Ate		**82062900**	
			Ate		**82032000**		51066207→ 58→	Ate		**82503500**	
			Ate		**82062900**				PRO	**92118503**	ø 278 x 12 x 41.5
			Ate		**82501200**		→51066206 →48999999		PRO	**92118403**	ø 292 x 20 x 41.5
				PRO	**92118303**	ø 302 x 28 x 45				**TPM0008**	
					TPM0007						
742900			Ate		**2373807**	[o] 23738 20.6	⊖ police veh. ⊖ sports susp. →51999999 →58999999	Ate		**2413701**	[–] 24137 16.7
2.0 DTI 16V	10/03→07/08	74 / 101			**98029100**	L685	→48045597 →41048789	Ate	epad	**2413781**	[–] 24137 16.7
			Ate		**82032000**		51064147→ 58→ ⊖ police veh. →51064146 →48999999 ⊖ sports susp. ⊕ police veh.	Ate		**82062900**	
			Ate		**82055100**		→51064146 →48999999	Ate		**82503500**	
			Ate		**82062900**				PRO	**92118503**	ø 278 x 12 x 41.5
				PRO	**92118703**	ø 285 x 25 x 41.9	→51999999 →58999999		PRO	**92118403**	ø 292 x 20 x 41.5
					TPM0007					**TPM0008**	
743000			Ate		**2373807**	[o] 23738 20.6	→51999999 →58999999 ⊖ police veh. ⊖ sports susp. →51066206 →48999999	Ate		**2413701**	[–] 24137 16.7
2.2 direct	10/03→07/08	114 / 155	Ate		**2415501**	[o] 24155 20.6		Ate	epad	**2413781**	[–] 24137 16.7
					98029100	L685	→48045597 →41048789	Ate		**82062900**	

T - Z

30 kW / hp

VECTRA Mk II (C) Estate 10/03→07/08

2.2 direct	10/03→07/08	743000 114 / 155	Ate	82032000		51064147→ 58→ 51066207→ 58→ ⊕ sports susp.	Ate	82503500		
			Ate	82055100		→51064146 →48999999 ⊖ sports susp.		PRO 92118503	ø 278 x 12 x 41.5	
			Ate	82062900				PRO 92118403	ø 292 x 20 x 41.5	
			Ate	82501200		→51066206 →48999999 ⊕ sports susp.		TPM0008		
				PRO 92118303	ø 302 x 28 x 45	⊕ sports susp.				
				PRO 92118703	ø 285 x 25 x 41.9	⊖ sports susp.				
				TPM0007						
2.2 DTI 16V	10/03→07/08	743100 92 / 125	Ate	2373807	[o] 23738 20.6	⊖ police veh. →58999999 →51066206	Ate	2413701	[–] 24137 16.7	
			Ate	2415501	[o] 24155 20.6	51066207→ →51999999 →58999999	Ate	epad 2413781	[–] 24137 16.7	
				98029100	L685	→48045597 →41048789	Ate	82062900		
				98031400	L287	41048790→ 48045598→	Ate	82503500		
			Ate	82032000		51064147→ 58→ 51066207→ 58→ ⊕ sports susp.		PRO 92118503	ø 278 x 12 x 41.5	
			Ate	82055100		→51064146 →48999999 ⊖ sports susp.		PRO 92118403	ø 292 x 20 x 41.5	
			Ate	82062900				TPM0008		
			Ate	82501200		→51066206 →48999999 ⊕ sports susp.				
				PRO 92118303	ø 302 x 28 x 45	⊕ sports susp.				
				PRO 92118703	ø 285 x 25 x 41.9	⊖ sports susp.				
				TPM0007						
2.8 V6 Turbo	08/05→07/08	743200 169 / 230	Ate	2391202	[–] 23912 20.4		Ate	2413701	[–] 24137 16.7	
				98030100	L302		Ate	epad 2413781	[–] 24137 16.7	
			Ate	82062900			Ate	82062900		
			Ate	82071800			Ate	82503500		
				PRO 92118803	ø 314 x 28 x 44.9	⊖ OPC, VRX 610000001→		PRO 92118503	ø 278 x 12 x 41.5	
				PRO 92242403	ø 345 x 30 x 45.4	⊕ OPC, VRX 61000001→		PRO 92118403	ø 292 x 20 x 41.5	
				TPM0007				TPM0008		
2.8 V6 Turbo 2.8 V6 Turbo	08/06→07/08 10/06→07/08	743300 188 / 255 206 / 280	Ate	2391202	[–] 23912 20.4		Ate	2413701	[–] 24137 16.7	
				98030100	L302		Ate	epad 2413781	[–] 24137 16.7	
			Ate	82062900			Ate	82062900		
			Ate	82071800			Ate	82503500		
				PRO 92118803	ø 314 x 28 x 44.9	⊖ OPC, VRX 61000001→		PRO 92118503	ø 278 x 12 x 41.5	
				PRO 92242403	ø 345 x 30 x 45.4	⊕ OPC, VRX 61000001→		PRO 92118403	ø 292 x 20 x 41.5	
				TPM0007				TPM0008		
3.0 CDTi	08/05→07/08	743400 135 / 184	Ate	2022401	[o] 20224 20.9		Ate	2413701	[–] 24137 16.7	
				98030100	L302	48045598→ 41048790→	Ate	epad 2413781	[–] 24137 16.7	
			Ate	82062900			Ate	82062900		
			Ate	82071800			Ate	82503500		
				PRO 92118803	ø 314 x 28 x 44.9			PRO 92118503	ø 278 x 12 x 41.5	
				TPM0007				PRO 92118403	ø 292 x 20 x 41.5	
								TPM0008		
3.0 V6 CDTI	10/03→08/05	743500 130 / 177	Ate	2022401	[o] 20224 20.9	31070294→ 38047798→ →51999999 →58999999	Ate	2413701	[–] 24137 16.7	

T - Z

kW / hp

VECTRA Mk II (C) Estate 10/03→07/08

743500													
3.0 V6 CDTI	10/03→08/05	130 / 177	Ate	2340404	[0] 23404 20.4	⊕ GB ⊕ police veh.	Ate	2413781	[–] 24137 16.7	
				98029700	L693	→48045597 →41048789 38047798→ 31070294→	Ate	82062900		
				98030100	L302	48045598→ 41048790→	Ate	82503500		
			Ate	82062900				92118503	ø 278 x 12 x 41.5	
			Ate	82501200		→31070293 →38047797		92118403	ø 292 x 20 x 41.5	
				92118303	ø 302 x 28 x 45	→31070293 →38047797		TPM0008		
				92118803	ø 314 x 28 x 44.9	→51999999 →58999999 31070294→ 38047798→				
				TPM0007						
743600										
3.2 V6	10/03→08/05	155 / 211	Ate	2022401	[0] 20224 20.9	31070294→ 38047798→ →51999999 →58999999	Ate	2413701	[–] 24137 16.7	
			Ate	2340404	[0] 23404 20.4	⊕ GB ⊕ police veh.	Ate	2413781	[–] 24137 16.7	
			Ate	2373807	[0] 23738 20.6	→31070293 →38047797	Ate	82062900		
				98029700	L693	→48045597 →41048789 38047798→ 31070294→	Ate	82503500		
				98030100	L302	48045598→ 41048790→		92118503	ø 278 x 12 x 41.5	
			Ate	82062900				92118403	ø 292 x 20 x 41.5	
			Ate	82501200				TPM0008		
				92118303	ø 302 x 28 x 45	→31070293 →38047797				
				92118803	ø 314 x 28 x 44.9	→51999999 →58999999 31070294→ 38047798→				
				TPM0007						

VECTRA Mk II (C) GTS 08/02→07/08

743700													
1.8	01/06→07/08	103 / 140	Ate	2373807	[0] 23738 20.6	⊖ police veh. ⊖ sports susp. →51999999 →58999999	Ate	2413701	[–] 24137 16.7	
			Ate	2415501	[0] 24155 20.6	61000001→ 68→	Ate	2413781	[–] 24137 16.7	
				98029100	L685	→48045597 →41048789	Ate	82062900		
			Ate	82032000			Ate	82503500		
			Ate	82062900				92118503	ø 278 x 12 x 41.5	
				92118303	ø 302 x 28 x 45	⊕ police veh.		92118403	ø 292 x 20 x 41.5	
				92118703	ø 285 x 25 x 41.9	⊖ police veh.		TPM0008		
				TPM0007						
743800										
1.8 16V	08/02→07/08	90 / 122	Ate	2373807	[0] 23738 20.6	→51999999 →58999999 ⊖ police veh. ⊖ sports susp.	Ate	2413701	[–] 24137 16.7	
1.8 16V Dualfuel	08/02→07/08	90 / 122				→51066206 →48999999 ⊕ police veh. ⊕ sports susp.	Ate	2413781	[–] 24137 16.7	
			Ate	2415501	[0] 24155 20.6		Ate	82062900		
				98029100	L685	→48045597 →41048789	Ate	82503500		
				98031400	L287	41048790→ 48045598→		92118503	ø 278 x 12 x 41.5	
			Ate	82032000		⊕ police veh. ⊕ sports susp. 51066207→ 58→		92118403	ø 292 x 20 x 41.5	
						⊖ police veh. ⊖ sports susp. 51064147→ 58→		TPM0008		
			Ate	82055100		→51064146 →48999999 ⊖ police veh. ⊖ sports susp.				
			Ate	82062900						
			Ate	82501200		→51066206 →48999999 ⊕ police veh. ⊕ sports susp.				
				92118303	ø 302 x 28 x 45	⊕ sports susp.				
				92118703	ø 285 x 25 x 41.9	⊖ sports susp.				
				TPM0007						
743900										
1.9 CDTI	08/02→07/08	88 / 120	Ate	2373807	[0] 23738 20.6		Ate	2413701	[–] 24137 16.7	
1.9 CDTI 16V	04/04→07/08	110 / 150								

T - Z

VECTRA Mk II (C) GTS 08/02→07/08

		kW / hp												
743900														
1.9 CDTI	08/02→07/08	88 / 120			98029100	L685		→48045597 →41048789	Ate		2413781	[–] 24137 16.7		
1.9 CDTI 16V	04/04→07/08	110 / 150			98031400	L287		41048790→ 48045598→	Ate		82062900			
			Ate		82032000			54064147→ 58→ ⊖ police veh. ⊖ sports susp.	Ate		82503500			
								51066207→ 58→ ⊕ police veh. ⊕ sports susp.		PRO	92118503	ø 278 x 12 x 41.5		
			Ate		82055100			→51064146 →48999999 ⊖ police veh. ⊖ sports susp.		PRO	92118403	ø 292 x 20 x 41.5		
			Ate		82062900						TPM0008			
			Ate		82501200			→51066206 →48999999 ⊕ police veh. ⊕ sports susp.						
				PRO	92118303	ø 302 x 28 x 45		⊕ police veh. ⊕ sports susp.						
				PRO	92118703	ø 285 x 25 x 41.9		⊕ sports susp. ⊕ police veh.						
					TPM0007									
744000														
2.0 16V Turbo	03/03→07/08	129 / 175	Ate		2373807	[o] 23738 20.6		→51066206 →48999999	Ate		2413701	[–] 24137 16.7		
			Ate		2415501	[o] 24155 20.6			Ate		2413781	[–] 24137 16.7		
					98029100	L685		→48045597 →41048789	Ate		82062900			
			Ate		82032000			51066207→ 58→	Ate		82503500			
			Ate		82062900					PRO	92118503	ø 278 x 12 x 41.5		
			Ate		82501200			→51066206 →48999999		PRO	92118403	ø 292 x 20 x 41.5		
				PRO	92118303	ø 302 x 28 x 45					TPM0008			
					TPM0007									
744100														
2.0 DTI 16V	08/02→07/08	74 / 101	Ate		2373807	[o] 23738 20.6		⊖ police veh. ⊖ sports susp. →51999999 →58999999	Ate		2413701	[–] 24137 16.7		
					98029100	L685		→48045597 →41048789	Ate		2413781	[–] 24137 16.7		
			Ate		82032000			51064147→ 58→ ⊖ police veh. →51064146 →48999999 ⊖ sports susp. ⊕ police veh.	Ate		82062900			
			Ate		82055100			→51064146 →48999999	Ate		82503500			
			Ate		82062900					PRO	92118503	ø 278 x 12 x 41.5		
				PRO	92118703	ø 285 x 25 x 41.9		→51999999 →58999999		PRO	92118403	ø 292 x 20 x 41.5		
					TPM0007						TPM0008			
744200														
2.2 16V	08/02→07/08	108 / 147	Ate		2373807	[o] 23738 20.6		→51999999 →58999999 ⊖ police veh. ⊖ sports susp. →51066206 →48999999	Ate		2413701	[–] 24137 16.7		
2.2 direct	10/03→08/05	114 / 155	Ate		2415501	[o] 24155 20.6			Ate		2413781	[–] 24137 16.7		
					98029100	L685		→48045597 →41048789	Ate		82062900			
			Ate		82032000			51064147→ 58→	Ate		82503500			
								51066207→ 58→ ⊕ sports susp.		PRO	92118503	ø 278 x 12 x 41.5		
			Ate		82055100			→51064146 →48999999 ⊖ sports susp.		PRO	92118403	ø 292 x 20 x 41.5		
			Ate		82062900						TPM0008			
			Ate		82501200			→51066206 →48999999 ⊕ sports susp.						
				PRO	92118303	ø 302 x 28 x 45		⊕ sports susp.						
				PRO	92118703	ø 285 x 25 x 41.9		⊖ sports susp.						
					TPM0007									
744300														
2.2 DTI 16V	08/02→07/08	92 / 125	Ate		2373807	[o] 23738 20.6		⊖ police veh. →58999999 →51066206	Ate		2413701	[–] 24137 16.7		
			Ate		2415501	[o] 24155 20.6		51066207→ →51999999 →58999999	Ate		2413781	[–] 24137 16.7		
					98029100	L685		→48045597 →41048789	Ate		82062900			
					98031400	L287		41048790→ 48045598→	Ate		82503500			
			Ate		82032000			51064147→ 58→ 51066207→ 58→ ⊕ sports susp.		PRO	92118503	ø 278 x 12 x 41.5		

T - Z

		kW / hp											
VECTRA Mk II (C) GTS 08/02→07/08													
744300													
2.2 DTI 16V	08/02→07/08	92 / 125	Ate		82055100		→51064146 →48999999 ⊖ sports susp.		PRO	92118403	ø 292 x 20 x 41.5	
			Ate		82062900					TPM0008		
			Ate		82501200		→51066206 →48999999 ⊕ sports susp.					
				PRO	92118303	ø 302 x 28 x 45	⊕ sports susp.					
				PRO	92118703	ø 285 x 25 x 41.9	⊖ sports susp.					
					TPM0007							
744400			Ate		2391202	[–] 23912 20.4		Ate		2413701	[–] 24137 16.7	
2.8 V6 Turbo	08/05→07/08	169 / 230										
2.8 V6 Turbo	08/05→07/08	188 / 255			98030100	L302		Ate	epad	2413781	[–] 24137 16.7	
2.8 V6 Turbo	08/06→07/08	184 / 250										
			Ate		82062900			Ate		82062900		
			Ate		82071800			Ate		82503500		
				PRO	92118803	ø 314 x 28 x 44.9	⊖ OPC, VRX 61000001→		PRO	92118503	ø 278 x 12 x 41.5	
				PRO	92242403	ø 345 x 30 x 45.4	⊕ OPC, VRX 61000001→		PRO	92118403	ø 292 x 20 x 41.5	
					TPM0007					TPM0008		
744500			Ate		2391202	[–] 23912 20.4	⊕ OPC,VXR	Ate		2413701	[–] 24137 16.7	→41096248 →48091178
2.8 V6 Turbo	08/06→	206 / 280	Ate		2022401	[o] 20224 20.9	6100001→	Ate	epad	2413781	[–] 24137 16.7	→41096248 →48091178
			Ate		82071800			Ate		82503500		
				PRO	92118803	ø 314 x 28 x 44.9	⊖ OPC,VXR 61000001→		PRO	92118503	ø 278 x 12 x 41.5	
				PRO	92242403	ø 345 x 30 x 45.4	⊕ OPC,VXR 61000001→		PRO	92118403	ø 292 x 20 x 41.5	
					TPM0007							
744600			Ate		2022401	[o] 20224 20.9		Ate		2413701	[–] 24137 16.7	
3.0 CDTi	08/05→07/08	135 / 184			98030100	L302	48045598→ 41048790→	Ate	epad	2413781	[–] 24137 16.7	
			Ate		82062900			Ate		82062900		
			Ate		82071800			Ate		82503500		
				PRO	92118803	ø 314 x 28 x 44.9			PRO	92118503	ø 278 x 12 x 41.5	
					TPM0007				PRO	92118403	ø 292 x 20 x 41.5	
										TPM0008		
744700			Ate		2022401	[o] 20224 20.9	31070294→ 38047798→ →51999999 →58999999	Ate		2413701	[–] 24137 16.7	
3.0 V6 CDTI	06/03→08/05	130 / 177										
3.2 V6	08/02→07/08	155 / 211	Ate		2340404	[o] 23404 20.4	⊕ GB ⊕ police veh.	Ate	epad	2413781	[–] 24137 16.7	
			Ate		2373807	[o] 23738 20.6	→31070293 →38047797	Ate		82062900		
					98029700	L693	→48045597 →41048789 38047798→ 31070294→	Ate		82503500		
					98030100	L302	48045598→ 41048790→		PRO	92118503	ø 278 x 12 x 41.5	
			Ate		82062900				PRO	92118403	ø 292 x 20 x 41.5	
			Ate		82501200					TPM0008		
				PRO	92118303	ø 302 x 28 x 45	→31070293 →38047797					
				PRO	92118803	ø 314 x 28 x 44.9	→51999999 →58999999 31070294→ 38047798→					
					TPM0007							
VECTRA Mk II (C) Kombi 10/03→07/08 → VECTRA Mk II (C) Estate, Page 1187													
VIVARO Box (F7) 08/01→07/14													
744800			Luc		2309902	[+] 23099 18.4		Luc		2398001	[–] 23980 17	
1.9 DI	08/01→12/06	59 / 80										
1.9 DTI	08/01→12/06	74 / 101										
2.0 16V	08/01→12/06	88 / 120	Luc		82063500			Luc		82063300		
2.0 CDTI	01/06→07/14	66 / 90										
2.0 CDTI	08/06→07/14	84 / 114										
2.0 ECOTEC	08/06→07/14	86 / 117										

T - Z

		kW / hp											
VIVARO Box (F7) 08/01→07/14													
2.5 CDTI	08/06→07/14	107 / 146		PRO	92116003	ø 305.5 x 28 x 49.7			ABS	92153700	ø 280 x 12 x 102.2	
2.5 DTI	07/03→07/14	99 / 135										
VIVARO Combi (J7) 08/01→07/14													
		744900	Luc		2309902	[+] 23099 18.4		Luc		2398001	[–] 23980 17	
1.9 DI	08/01→12/06	59 / 80										
1.9 DTI	08/01→12/06	74 / 101	Luc		82063500			Luc		82063300		
2.0 16V	08/01→12/06	88 / 120										
2.0 CDTI	01/06→07/14	66 / 90		PRO	92116003	ø 305.5 x 28 x 49.7			ABS	92153700	ø 280 x 12 x 102.2	
2.0 CDTI	08/06→07/14	84 / 114										
2.0 ECOTEC	08/06→07/14	86 / 117										
2.5 CDTI	01/06→07/14	107 / 146										
2.5 DTI	07/03→07/14	99 / 135										
VIVARO Kasten (F7) 08/01→07/14 → VIVARO Box (F7), Page 1192													
VIVARO Platform/Chassis (E7) 04/03→07/14													
		745000	Luc		2309902	[+] 23099 18.4		Luc		2398001	[–] 23980 17	
1.9 DI	04/03→07/14	59 / 80										
2.0 16V	04/03→07/14	88 / 120	Luc		82063500			Luc		82063300		
2.0 CDTI	01/06→07/14	66 / 90										
2.0 CDTI	08/06→07/14	84 / 114		PRO	92116003	ø 305.5 x 28 x 49.7			ABS	92153700	ø 280 x 12 x 102.2	
2.0 ECOTEC	08/06→07/14	86 / 117										
2.5 CDTI	04/03→07/06	99 / 135										
2.5 CDTI	08/06→07/14	107 / 146										
2.5 CDTI	08/06→07/14	107 / 146										
VIVARO Pritsche/Fahrgestell (E7) 04/03→07/14 → VIVARO Platform/Chassis (E7), Page 1193													
VX220 09/00→07/05													
		745100	Ate		2032306	[–] 20323 14.5		Bre		2041003	[–] 20410 12.9	
2.0 i Turbo	03/01→07/05	147 / 200										
2.2 i	09/00→07/05	108 / 147		PRO	92075603	ø 288 x 25 x 42			PRO	92075603	ø 288 x 25 x 42	
					TPM0007					TPM0007		
ZAFIRA Mk I (A) (F75) 11/98→08/05													
		745200	Ate		2383201	[+] 23832 19.6		Bos		2325803	[+] 23258 16.9	⊕ rear disc brake Bosch
1.6 16V	04/99→08/05	74 / 101										
1.6 CNG	09/01→06/05	71 / 97	Ate	epad	2383281	[+] 23832 19.6		Luc		2341703	[+] 23417 15.2	⊕ rear disc brake Lucas
					98029800	L750	⊖ elec. damp. susp.	Luc		82060100		⊕ rear disc brake Lucas
					98031400	L287	⊕ elec. damp. susp.	Luc		82063300		⊕ rear disc brake
			Ate		82032000			Bos		82063700		⊕ rear disc brake
			Ate		82062900			Luc		91049000	ø 230 x 42	⊕ rear drum brake
				PRO	92091903	ø 280 x 25 x 42				97011800		⊕ rear drum brake
					TPM0007					84049002	bore ø 20.6 ø 230 x 42	⊕ rear drum brake
									PRO	92092103	ø 264 x 10 x 42	⊕ rear disc brake
										TPM0008		⊕ rear disc brake
										94022600	ø 230,0 x 49.5	⊕ rear drum brake
		745300	Ate		2383201	[+] 23832 19.6		Luc		2341703	[+] 23417 15.2	⊕ rear disc brake Lucas
1.6 Dualfuel	11/98→08/05	74 / 101	Ate	epad	2383281	[+] 23832 19.6		Luc		91049000	ø 230 x 42	⊕ rear drum brake
			Ate		82032000					84049002	bore ø 20.6 ø 230 x 42	⊕ rear drum brake
				PRO	92091903	ø 280 x 25 x 42			PRO	92092103	ø 264 x 10 x 42	⊕ rear disc brake
					TPM0007					94022600	ø 230,0 x 49.5	⊕ rear drum brake
		745400	Ate		2383201	[+] 23832 19.6		Bos		2325803	[+] 23258 16.9	Bosch
1.8 16V	05/99→08/00	85 / 116										
1.8 16V	09/00→08/05	92 / 125	Ate	epad	2383281	[+] 23832 19.6		Luc		2341703	[+] 23417 15.2	Lucas
1.8 Dualfuel	09/00→08/05	92 / 125										
2.0 DI 16V	10/99→08/05	60 / 82			98029800	L750	⊖ elec. damp. susp.	Luc		82060100		
2.0 DTI 16V	04/99→08/05	74 / 101										
2.2 16V	11/98→08/04	108 / 147			98031400	L287	⊕ elec. damp. susp.	Luc		82063300		
2.2 D	06/01→06/05	92 / 125										
			Ate		82032000			Bos		82063700		
			Ate		82062900				PRO	92092103	ø 264 x 10 x 42	
				PRO	92091903	ø 280 x 25 x 42				TPM0008		
					TPM0007							

30 kW / hp

ZAFIRA Mk I (A) (F75) 11/98→08/05

745500			Ate		2311701	[+] 23117 20.2		Luc		2341703	[+] 23417 15.2	
2.0	06/02→06/05	147 / 199	Ate		82032000			Luc		82060100		
2.0 GSI Turbo	09/01→06/05	141 / 192	Ate		82062900			Luc		82063300		
				PRO	92110903	ø 308 x 25 x 42			PRO	92092103	ø 264 x 10 x 42	
					TPM0007					TPM0008		

ZAFIRA Mk II (B) (M75) 04/05→

745600			Ate		2383201	[+] 23832 19.6		Luc		2341702	[–] 23417 15.2	
1.6	07/05→	77 / 105	Ate	epad	2383281	[+] 23832 19.6		Luc	epad	2341781	[–] 23417 15.2	
1.6	12/07→	85 / 115			98031400	L287		Luc		82060100		
			Ate		82032000			Luc		82063300		
			Ate		82062900				PRO	92092103	ø 264 x 10 x 42	
				PRO	92091903	ø 280 x 25 x 42	Ø 280 mm					
					TPM0007							
745700			Ate		2383201	[+] 23832 19.6		Luc		2341702	[–] 23417 15.2	
1.6 CNG	07/05→	69 / 94	Ate	epad	2383281	[+] 23832 19.6		Luc	epad	2341781	[–] 23417 15.2	
					98031400	L287		Luc		82060100		
			Ate		82032000			Luc		82063300		
				PRO	92110903	ø 308 x 25 x 42						
					TPM0007							
745800			Ate		2383201	[+] 23832 19.6		Luc		2341702	[–] 23417 15.2	
1.6 CNG Turbo	02/09→	110 / 150	Ate	epad	2383281	[+] 23832 19.6		Luc	epad	2341781	[–] 23417 15.2	
1.9 CDTI	07/05→	74 / 100			98031400	L287		Luc		82060100		
1.9 CDTI	07/05→	88 / 120	Ate		82032000			Luc		82063300		
1.9 CDTI	07/05→	110 / 150		PRO	92110903	ø 308 x 25 x 42				92167600	ø 278 x 10 x 42	
					TPM0007				PRO	92092103	ø 264 x 10 x 42	⊖ police veh.
									PRO	92167603	ø 278 x 10 x 42	
745900			Ate		2383201	[+] 23832 19.6		Luc		2341702	[–] 23417 15.2	
1.7 CDTI	01/08→	92 / 125	Ate	epad	2383281	[+] 23832 19.6		Luc	epad	2341781	[–] 23417 15.2	
					98031400	L287		Luc		82060100		
			Ate		82032000			Luc		82063300		
			Ate		82062900				PRO	92092103	ø 264 x 10 x 42	
				PRO	92110903	ø 308 x 25 x 42						
					TPM0007							
746000			Ate		2383201	[+] 23832 19.6		Luc		2341702	[–] 23417 15.2	
1.7 CDTI	04/09→	81 / 110	Ate	epad	2383281	[+] 23832 19.6		Luc	epad	2341781	[–] 23417 15.2	
					98031400	L287		Luc		82060100		
			Ate		82032000			Luc		82063300		
				PRO	92110903	ø 308 x 25 x 42			PRO	92092103	ø 264 x 10 x 42	
					TPM0007							
746100			Ate		2383201	[+] 23832 19.6		Luc		2341702	[–] 23417 15.2	
1.8	04/05→	103 / 140										

T - Z

		kW / hp											
ZAFIRA Mk II (B) (M75) 04/05→													
		746100	Ate		2383281	[+] 23832 19.6		Luc		2341781	[–] 23417 15.2	
1.8	04/05→	103 / 140			98031400	L287		Luc		82060100		
			Ate		82032000			Luc		82063300		
			Ate		82062900					92167600	ø 278 x 10 x 42	
				PRO	92091903	ø 280 x 25 x 42	Ø 280 mm		PRO	92092103	ø 264 x 10 x 42	⊖ police veh.
				PRO	92110903	ø 308 x 25 x 42	Ø 308 mm		PRO	92167603	ø 278 x 10 x 42	
					TPM0007							
		746200	Ate		2383201	[+] 23832 19.6		Luc		2341702	[–] 23417 15.2	
2.0	07/05→	147 / 200	Ate		2383281	[+] 23832 19.6		Luc		2341781	[–] 23417 15.2	
					98031400	L287		Luc		82060100		
			Ate		82032000			Luc		82063300		
			Ate		82062900					92167600	ø 278 x 10 x 42	52→
				PRO	92110903	ø 308 x 25 x 42			PRO	92092103	ø 264 x 10 x 42	→52
					TPM0007				PRO	92167603	ø 278 x 10 x 42	52→
		746300	Ate		2373807	[o] 23738 20.6		Luc		2341702	[–] 23417 15.2	
2.0	01/06→	176 / 240			98031400	L287		Luc		2341781	[–] 23417 15.2	
			Ate		82032000			Luc		82060100		
				PRO	92149803	ø 321 x 28 x 44		Luc		82063300		
					TPM0007					92167600	ø 278 x 10 x 42	
									PRO	92167603	ø 278 x 10 x 42	
		746400	Ate		2383201	[+] 23832 19.6		Luc		2341702	[–] 23417 15.2	
2.2	07/05→	110 / 150	Ate		2383281	[+] 23832 19.6		Luc		2341781	[–] 23417 15.2	
					98031400	L287		Luc		82060100		
			Ate		82032000			Luc		82063300		
			Ate		82062900					92167600	ø 278 x 10 x 42	⊕ police veh.
				PRO	92110903	ø 308 x 25 x 42			PRO	92092103	ø 264 x 10 x 42	⊖ police veh.
					TPM0007				PRO	92167603	ø 278 x 10 x 42	⊕ police veh.
ZAFIRA Mk III (P12) 10/11→													
		746500	Man		2441201	[+] 24412 19.1	17" -brake			2509602	[+] 25096 16.2	16" -brake
1.4	10/11→	88 / 120			2503401	[+] 25034 18.8	16" -brake Ø 300 mm		PRO	92239803	ø 315 x 23 x 45	17" -brake
1.4	10/11→	103 / 140										
1.4 LPG	10/11→	103 / 140			2503481	[+] 25034 18.8	16" -brake Ø 300 mm					
1.6 CNG	10/11→	110 / 150										
1.8	10/11→	85 / 115										
1.8	10/11→	88 / 120										
1.8	10/11→	103 / 140		PRO	92205603	ø 300 x 26 x 45.5	16" -brake					
2.0 CDTi	10/11→	81 / 110										
2.0 CDTi	10/11→	96 / 130										
2.0 CDTi	10/11→	118 / 160		PRO	92256803	ø 321 x 30 x 45.6	17" -brake					
2.0 CDTi	10/11→	121 / 165										
		746600	Man		2441201	[+] 24412 19.1	17" -brake			2509602	[+] 25096 16.2	16" -brake
1.6 CDTi	03/13→	100 / 136										
1.6 SIDI	07/13→	147 / 200			2503401	[+] 25034 18.8	16" -brake		PRO	92239803	ø 315 x 23 x 45	17" -brake
1.6 Turbo	12/12→	125 / 170										
2.0 BiTurbo CDTI	01/13→	143 / 194			2503481	[+] 25034 18.8	16" -brake					
				PRO	92205603	ø 300 x 26 x 45.5	16" -brake					
				PRO	92256803	ø 321 x 30 x 45.6	17" -brake					

T - Z

30 kW / hp

AMAROK (2H_, S1B) 09/10→

		746700	Bos		2448404	[–] 24484 18.9				91078700	ø 295 x 57	
2.0	09/11→	118 / 160										
2.0 4motion	09/11→	118 / 160	Bos		82054200			Luc		97032800		
2.0 BiTDI	09/10→	120 / 163										
2.0 BiTDI	11/11→	132 / 180		PRO	92228903	ø 303 x 28 x 57						
2.0 BiTDI 4motion	09/10→	120 / 163										
2.0 BiTDI 4motion	11/11→	132 / 180										
2.0 TDI	09/10→	90 / 122										
2.0 TDI	07/12→	103 / 140										
2.0 TDI 4motion	09/10→	90 / 122										
2.0 TDI 4motion	06/12→	103 / 140										
2.0 TSI	12/10→	118 / 160										

BEETLE (5C1) 04/11→

		746800	Ate		2313101	[+] 23131 19.7		Bos		2456301	[–] 24563 17.7		
1.2 TSI	07/11→	77 / 105											
1.6 TDI	10/11→	77 / 105	Ate	epad	2313181	[+] 23131 19.7		Bos		82054300			
				PRO	92120703	ø 280 x 22 x 49.9			PRO	92224903	ø 272 x 10 x 48.3		
				PRO	92120705	ø 280 x 22 x 49.9				TPM0008			
					TPM0008								
		746900	Ate		2358701	[+] 23587 20.3		Bos		2456301	[–] 24563 17.7		
1.4 TSI	04/11→	118 / 160											
2.0 TDI	04/11→	103 / 140	Ate	epad	2358781	[+] 23587 20.3		Bos		82054300			
2.5	04/12→	125 / 170											
2.5	07/13→	112 / 152	Ate		82076800				PRO	92224903	ø 272 x 10 x 48.3		
				PRO	92120803	ø 288 x 25 x 49.8				TPM0008			
				PRO	92120805	ø 288 x 25 x 49.8							
					TPM0008								
		747000	Ate		2313101	[+] 23131 19.7	PR 1ZQ,1ZM	Luc		2355402	[–] 23554 17.2	PR 1KD,1KU	
2.0	01/13→	147 / 200											
2.0 TDI	09/12→	104 / 141	Ate	epad	2313181	[+] 23131 19.7	PR 1ZQ,1ZM	Luc	epad	2355481	[–] 23554 17.2	PR 1KD,1KU	
2.0 TSI	12/12→	155 / 211											
2.5	04/11→	125 / 170	Ate		2358701	[+] 23587 20.3	PR 1ZA,1ZE,1ZP PR 1ZB,1LV,1ZD	Bos		2456301	[–] 24563 17.7	PR 1KS,1KT	
			Ate	epad	2358781	[+] 23587 20.3	PR 1ZA,1ZE,1ZP PR 1ZB,1LV,1ZD	Bos		82054300		PR 1KS,1KT	
			Ate		82076800		PR 1ZA,1ZE,1ZP PR 1LV,1ZB,1ZD	Luc		82509000		PR 1KD,1KU	
				PRO	92120503	ø 312 x 25 x 49.7	PR 1ZA,1ZB,1LV,1ZD		PRO	92224903	ø 272 x 10 x 48.3	PR 1KS,1KT	
				PRO	92120703	ø 280 x 22 x 49.9	PR 1ZM			TPM0008			
				PRO	92120705	ø 280 x 22 x 49.9	PR 1ZM						
				PRO	92120803	ø 288 x 25 x 49.8	PR 1ZE,1ZP						
				PRO	92120805	ø 288 x 25 x 49.8	PR 1ZE,1ZP						
					TPM0008								
		747100	Ate		2358701	[+] 23587 20.3		Bos		2456301	[–] 24563 17.7		
2.0 TSI	04/11→	147 / 200											
			Ate	epad	2358781	[+] 23587 20.3		Bos		82054300			
			Ate		82076800				PRO	92224903	ø 272 x 10 x 48.3		
				PRO	92120503	ø 312 x 25 x 49.7				TPM0008			
					TPM0008								

BEETLE (9C1, 1C1) 01/98→09/10 → NEW BEETLE (9C1, 1C1), Page 1241

BEETLE 09/92→08/03 → KAEFER, Page 1234

BEETLE Cabriolet (1Y7) 09/02→10/10 → NEW BEETLE Convertible (1Y7), Page 1242

BEETLE Cabriolet (5C7) 12/12→ → BEETLE Convertible (5C7), Page 1196

BEETLE Convertible (1Y7) 09/02→10/10 → NEW BEETLE Convertible (1Y7), Page 1242

BEETLE Convertible (5C7) 12/12→

		747200	Ate		2313101	[+] 23131 19.7		Bos		2456301	[–] 24563 17.7		
1.2 TSI	12/12→	77 / 105											
1.6 TDI	12/12→	77 / 105	Ate	epad	2313181	[+] 23131 19.7		Bos		82054300			
				PRO	92120703	ø 280 x 22 x 49.9			PRO	92224903	ø 272 x 10 x 48.3		

		kW / hp											
BEETLE Convertible (5C7) 12/12→													
		747200		PRO	92120705	ø 280 x 22 x 49.9				TPM0008			
1.2 TSI	12/12→	77 / 105		TPM	TPM0008								
1.6 TDI	12/12→	77 / 105											
		747300	Ate		2358701	[+] 23587 20.3			Bos		2456301	[–] 24563 17.7	
1.4 TSI	12/12→	118 / 160											
2.0 TDI	12/12→	103 / 140	Ate	epad	2358781	[+] 23587 20.3			Bos		82054300		
2.5	07/13→	112 / 152											
			Ate		82076800					PRO	92224903	ø 272 x 10 x 48.3	
				PRO	92120803	ø 288 x 25 x 49.8				TPM	TPM0008		
				PRO	92120805	ø 288 x 25 x 49.8							
				TPM	TPM0008								
		747400	Ate		2358701	[+] 23587 20.3			Bos		2456301	[–] 24563 17.7	
2.0 TSI	12/12→	147 / 200											
			Ate	epad	2358781	[+] 23587 20.3			Bos		82054300		
			Ate		82076800					PRO	92224903	ø 272 x 10 x 48.3	
				PRO	92120503	ø 312 x 25 x 49.7				TPM	TPM0008		
				TPM	TPM0008								
		747500	Ate		2313101	[+] 23131 19.7	PR 1ZQ,1ZM		Luc		2355402	[–] 23554 17.2	PR 1KD,1KU
2.0 TSI	12/12→	155 / 210											
			Ate	epad	2313181	[+] 23131 19.7	PR 1ZQ,1ZM		Luc	epad	2355481	[–] 23554 17.2	PR 1KD,1KU
			Ate		2358701	[+] 23587 20.3	PR 1ZA,1ZE,1ZP PR 1ZB,1LV,1ZD		Bos		2456301	[–] 24563 17.7	PR 1KS,1KT
			Ate	epad	2358781	[+] 23587 20.3	PR 1ZA,1ZE,1ZP PR 1ZB,1LV,1ZD		Bos		82054300		PR 1KS,1KT
			Ate		82076800		PR 1ZA,1ZE,1ZP PR 1LV,1ZB,1ZD		Luc		82509000		PR 1KD,1KU
				PRO	92120503	ø 312 x 25 x 49.7	PR 1ZA,1ZB,1LV,1ZD			PRO	92224903	ø 272 x 10 x 48.3	PR 1KS,1KT
				PRO	92120703	ø 280 x 22 x 49.9	PR 1ZM			TPM	TPM0008		
				PRO	92120705	ø 280 x 22 x 49.9	PR 1ZM						
				PRO	92120803	ø 288 x 25 x 49.8	PR 1ZE,1ZP						
				PRO	92120805	ø 288 x 25 x 49.8	PR 1ZE,1ZP						
				TPM	TPM0008								
BORA / JETTA V Estate (1K5) 06/07→07/09 → GOLF V Variant (1K5), Page 1222													
BORA / JETTA V Variant (1K5) 06/07→07/09 → GOLF V Variant (1K5), Page 1222													
BORA (1J2) 10/98→07/05													
		747600	Ate		2313101	[+] 23131 19.7			Luc		2355402	[–] 23554 17.2	
1.4 16V	03/00→05/05	55 / 75											
1.6	08/00→05/05	75 / 102	Ate	epad	2313181	[+] 23131 19.7			Luc	epad	2355481	[–] 23554 17.2	
1.6	06/02→10/04	78 / 107											
1.6 16V	05/00→05/05	77 / 105											
1.6 FSI	01/02→05/05	81 / 110	Ate		82062900				Luc		82037300		PR 1KP,1KT,1KX
1.9 TDI	09/00→05/05	74 / 101											
				PRO	92082203	ø 256 x 22 x 36.5	PR 1LQ		Luc		82502100		PR 2EE,1KY
				PRO	92082303	ø 280 x 22 x 36.5	PR 1LS,1ZM,1ZP		Luc		82063300		
				TPM	TPM0008					PRO	92082503	ø 232 x 9 x 39.3	PR 1KP,1KT,1KX
										PRO	92098603	ø 256 x 22 x 36.7	PR 2EE,1KY
										TPM	TPM0008		
		747700	Ate		2313001	[–] 23130 19.7	→1J-X-800000 →04/99		Luc		2355402	[–] 23554 17.2	
1.6	10/98→05/05	74 / 101											
1.8	10/98→05/05	92 / 125	Ate	epad	2313081	[–] 23130 19.7	→1J-X-800000 →04/99		Luc	epad	2355481	[–] 23554 17.2	
1.9 SDI	10/98→05/05	50 / 68											
1.9 TDI	10/98→06/01	66 / 90											
1.9 TDI	10/98→06/01	81 / 110	Ate		2313101	[+] 23131 19.7	05/99→ 1J-Y-000001→		Luc		82037300		PR 1KP,1KT,1KX
1.9 TDI	12/98→01/02	85 / 115											
2.0	10/98→05/05	85 / 115	Ate	epad	2313181	[+] 23131 19.7	05/99→ 1J-Y-000001→		Luc		82502100		PR 2EE,1KY
			Ate		82062900				Luc		82063300		
				PRO	92082203	ø 256 x 22 x 36.5	PR 1LQ			PRO	92082503	ø 232 x 9 x 39.3	PR 1KP,1KT,1KX

		kW / hp											
BORA (1J2) 10/98→07/05													
		747700											
1.6	10/98→05/05	74 / 101		PRO	92082303	ø 280 x 22 x 36.5	PR 1LS,1ZM,1ZP		PRO	92098603	ø 256 x 22 x 36.7	PR 2EE,1KY
1.8	10/98→05/05	92 / 125			TPM0008					TPM0008		
1.9 SDI	10/98→05/05	50 / 68										
1.9 TDI	10/98→06/01	66 / 90										
1.9 TDI	10/98→06/01	81 / 110										
1.9 TDI	12/98→01/02	85 / 115										
2.0	10/98→05/05	85 / 115										
		747800	Ate		2313001	[–] 23130 19.7	→1J-X-800000 →04/99	Luc		2355402	[–] 23554 17.2	
1.8 4motion	02/99→05/05	92 / 125	Ate	epad	2313081	[–] 23130 19.7	→1J-X-800000 →04/99	Luc	epad	2355481	[–] 23554 17.2	
			Ate		2313101	[+] 23131 19.7	05/99→ 1J-Y-000001→	Luc		82037300		
			Ate	epad	2313181	[+] 23131 19.7	05/99→ 1J-Y-000001→	Luc		82063300		
			Ate		82062900				PRO	92105803	ø 239 x 9 x 33.5	
					TPM0008					TPM0008		
		747900	Ate		2339201	[+] 23392 20.6		Luc		2355402	[–] 23554 17.2	
1.8 T	05/00→05/05	110 / 150										
1.8 T	03/02→05/05	132 / 180	Ate		82029300			Luc	epad	2355481	[–] 23554 17.2	
1.9 TDI	05/00→05/05	110 / 150										
1.9 TDI	11/00→05/05	96 / 130	Ate		82062900			Luc		82037300		PR 1KP,1KT,1KX
2.3 V5	10/98→10/00	110 / 150										
2.3 V5	10/00→05/05	125 / 170						Luc		82502100		PR 2EE,1KY
2.8 VR6	11/98→07/02	130 / 177		PRO	92098503	ø 312 x 25 x 34	PR 1LJ					
2.8 VR6	02/02→07/05	147 / 200		PRO	92106603	ø 288 x 25 x 34.4	PR 1LN,1ZH,1LE,1ZE PR 1ZD	Luc		82063300		
2.8 VR6	08/02→07/05	128 / 174			TPM0008				PRO	92082503	ø 232 x 9 x 39.3	PR 1KP,1KT,1KX
									PRO	92098603	ø 256 x 22 x 36.7	PR 2EE,1KY
										TPM0008		
		748000	Ate		2339201	[+] 23392 20.6		Luc		2355402	[–] 23554 17.2	
1.8 T 4motion	10/00→05/01	110 / 150										
1.9 TDI 4motion	05/00→05/05	110 / 150	Ate		82029300			Luc	epad	2355481	[–] 23554 17.2	
1.9 TDI 4motion	11/00→05/05	96 / 130										
2.3 V5 4motion	12/98→10/00	110 / 150	Ate		82062900			Luc		82037300		PR 1KE,2EG
2.3 V5 4motion	10/00→05/05	125 / 170										
2.8 V6 4motion	03/99→05/05	150 / 204						Luc		82502100		PR 2EE,1KY
				PRO	92098503	ø 312 x 25 x 34	PR 1LJ					
				PRO	92106603	ø 288 x 25 x 34.4	PR 1LN,1ZH,1LE,1ZE PR 1ZD	Luc		82063300		
					TPM0008				PRO	92105803	ø 239 x 9 x 33.5	PR 1KE,2EG
									PRO	92098603	ø 256 x 22 x 36.7	PR 2EE,1KY
										TPM0008		
		748100	Ate		2313001	[–] 23130 19.7	→1J-X-800000 →04/99	Luc		2355402	[–] 23554 17.2	
1.9 TDI 4motion	02/99→06/01	66 / 90	Ate	epad	2313081	[–] 23130 19.7	→1J-X-800000 →04/99	Luc	epad	2355481	[–] 23554 17.2	
1.9 TDI 4motion	02/99→06/01	85 / 115										
			Ate		2313101	[+] 23131 19.7	05/99→ 1J-Y-000001→	Luc		82037300		PR 1KE,2EG
			Ate	epad	2313181	[+] 23131 19.7	05/99→ 1J-Y-000001→	Luc		82502100		PR 2EE,1KY
			Ate		82062900			Luc		82063300		
					TPM0008				PRO	92105803	ø 239 x 9 x 33.5	
										TPM0008		
		748200	Ate		2313101	[+] 23131 19.7		Luc		2355402	[–] 23554 17.2	
1.9 TDI 4motion	09/00→05/05	74 / 101										
2.0 4motion	04/00→05/05	85 / 115	Ate	epad	2313181	[+] 23131 19.7		Luc	epad	2355481	[–] 23554 17.2	
			Ate		82062900			Luc		82037300		
				PRO	92082303	ø 280 x 22 x 36.5		Luc		82063300		
					TPM0008				PRO	92105803	ø 239 x 9 x 33.5	
										TPM0008		
BORA Estate (1J6) 05/99→05/05													
		748300	Ate		2313101	[+] 23131 19.7		Luc		2355402	[–] 23554 17.2	
1.4 16V	09/01→05/05	55 / 75										

T - Z

kW / hp

BORA Estate (1J6) 05/99→05/05

		748300	Ate		2313181	[+] 23131 19.7		Luc		2355481	[–] 23554 17.2	
1.4 16V	09/01→05/05	55 / 75	Ate		82062900			Luc		82037300		
				PRO	92082303	ø 280 x 22 x 36.5		Luc		82063300		
					TPM0008				PRO	92082503	ø 232 x 9 x 39.3	
										TPM0008		
		748400	Ate		2313101	[+] 23131 19.7		Luc		2355402	[–] 23554 17.2	
1.6	05/99→05/05	74 / 100										
1.6	08/00→05/05	75 / 102	Ate		2313181	[+] 23131 19.7		Luc		2355481	[–] 23554 17.2	
1.6 16V	02/00→05/05	77 / 105										
1.6 FSI	01/02→05/05	81 / 110	Ate		82062900			Luc		82037300		PR 1KP,1KT,1KX
1.9 TDI	05/99→06/01	81 / 110		PRO	92082203	ø 256 x 22 x 36.5	PR 1LQ	Luc		82502100		PR 2EE,1KY
1.9 TDI	05/99→06/01	85 / 115		PRO	92082303	ø 280 x 22 x 36.5	PR 1LS,1ZM,1ZP	Luc		82063300		
1.9 TDI	09/00→05/05	74 / 101			TPM0008				PRO	92082503	ø 232 x 9 x 39.3	PR 1KP,1KT,1KX
1.9 TDI	07/04→05/05	66 / 90							PRO	92098603	ø 256 x 22 x 36.7	PR 2EE,1KY
2.0	05/99→05/05	85 / 115								TPM0008		
		748500	Ate		2313101	[+] 23131 19.7		Luc		2355402	[–] 23554 17.2	
1.8 4motion	05/99→05/05	92 / 125										
2.0 4motion	12/99→05/03	88 / 120	Ate		2313181	[+] 23131 19.7		Luc		2355481	[–] 23554 17.2	
			Ate		82062900			Luc		82037300		PR 1KE,2EG
				PRO	92082203	ø 256 x 22 x 36.5	PR 1LQ	Luc		82502100		PR 2EE,1KY
				PRO	92082303	ø 280 x 22 x 36.5	PR 1LS,1ZM,1ZP	Luc		82063300		
					TPM0008				PRO	92105803	ø 239 x 9 x 33.5	PR 1KE,2EG
									PRO	92098603	ø 256 x 22 x 36.7	PR 2EE,1KY
										TPM0008		
		748600	Ate		2339201	[+] 23392 20.6		Luc		2355402	[–] 23554 17.2	
1.8 T	05/00→05/05	110 / 150	Ate		82029300			Luc		2355481	[–] 23554 17.2	
1.8 T	05/02→05/05	132 / 180										
1.9 TDI	11/00→05/05	96 / 130	Ate		82062900			Luc		82037300		PR 1KP,1KT,1KX
1.9 TDI	05/01→05/05	110 / 150		PRO	92098503	ø 312 x 25 x 34	PR 1LJ	Luc		82502100		PR 2EE,1KY
2.3 V5	05/99→10/00	110 / 150		PRO	92106603	ø 288 x 25 x 34.4	PR 1LN,1ZH,1LE,1ZE PR 1ZD	Luc		82063300		
2.3 V5	10/00→05/05	125 / 170			TPM0008				PRO	92082503	ø 232 x 9 x 39.3	PR 1KP,1KT,1KX
2.8 VR6	03/00→05/00	150 / 204							PRO	92098603	ø 256 x 22 x 36.7	PR 2EE,1KY
2.8 VR6	08/02→07/03	130 / 177								TPM0008		
		748700	Ate		2313101	[+] 23131 19.7		Luc		2355402	[–] 23554 17.2	
1.9 TDI 4motion	05/99→06/01	85 / 115										
1.9 TDI 4motion	09/00→05/05	74 / 101	Ate		2313181	[+] 23131 19.7		Luc		2355481	[–] 23554 17.2	
2.0 4motion	04/00→05/05	85 / 115	Ate		82062900			Luc		82037300		
				PRO	92082303	ø 280 x 22 x 36.5		Luc		82063300		
					TPM0008				PRO	92105803	ø 239 x 9 x 33.5	
										TPM0008		
		748800	Ate		2339201	[+] 23392 20.6		Luc		2355402	[–] 23554 17.2	
1.9 TDI 4motion	11/00→05/05	96 / 130										
1.9 TDI 4motion	05/01→05/05	110 / 150	Ate		82029300			Luc		2355481	[–] 23554 17.2	
2.3 V5 4motion	05/99→10/00	110 / 150										
2.3 V5 4motion	10/00→05/05	125 / 170	Ate		82062900			Luc		82037300		PR 1KE,2EG
2.8 V6 4motion	05/99→05/05	150 / 204		PRO	92098503	ø 312 x 25 x 34	PR 1LJ	Luc		82502100		PR 2EE,1KY
				PRO	92106603	ø 288 x 25 x 34.4	PR 1LN,1ZH,1LE,1ZE PR 1ZD	Luc		82063300		

T - Z

		kW / hp											
BORA Estate (1J6) 05/99→05/05													
		748800											
1.9 TDI 4motion	11/00→05/05	96 / 130			TPM0008				PRO	92105803	ø 239 x 9 x 33.5	PR 1KE,2EG
1.9 TDI 4motion	05/01→05/05	110 / 150							PRO	92098603	ø 256 x 22 x 36.7	PR 2EE,1KY
2.3 V5 4motion	05/99→10/00	110 / 150										
2.3 V5 4motion	10/00→05/05	125 / 170										
2.8 V6 4motion	05/99→05/05	150 / 204								TPM0008		
BORA Kombi (1J6) 05/99→05/05 → BORA Estate (1J6), Page 1198													
BORA Saloon (1J2) 10/98→07/05 → BORA (1J2), Page 1197													
BORA Stufenheck (1J2) 10/98→07/05 → BORA (1J2), Page 1197													
CABRIO IV Cabriolet (1E7) 06/98→06/02 → GOLF IV Cabriolet (1E7), Page 1218													
CABRIO IV Convertible (1E7) 06/98→06/02 → GOLF IV Cabriolet (1E7), Page 1218													
CADDY II Box (9K9A) 11/95→01/04													
		748900	Luc		2194502	[–] 21945 16.2			Ate	91052400	ø 230 x 32	
1.4	08/00→01/04	55 / 75	Luc		82062800				Ate	97011300		9K-Y-500748→
				PRO	92036803	ø 256 x 20 x 38.7			Ate	84052401	bore ø 20.6 ø 230 x 32	
					TPM0008					94029500	ø 230 x 39	
		749000	Luc		2194502	[–] 21945 16.2			Ate	91044400	ø 230 x 40	→9K-Y-500747
1.7 SDI	07/96→09/00	42 / 57	Luc		82062800				Ate	91052400	ø 230 x 32	9K-Y-500748→
1.9 TDI	09/96→01/04	66 / 90		PRO	92036803	ø 256 x 20 x 38.7			Ate	97006600		→9K-Y-500747
					TPM0008				Ate	97011300		9K-Y-500748→
									Ate	84044400	bore ø 20.6 ø 230 x 40	→9K-Y-500747
									Ate	84052401	bore ø 20.6 ø 230 x 32	9K-Y-500748→
										94029500	ø 230 x 39	9K-Y-500748→
										94018900	ø 230,0 x 51	→9K-Y-500747
		749100	Luc		2016804	[–] 20168 19.6	→9K-T-514500		Ate	91044400	ø 230 x 40	→9K-Y-500747
1.9 D	11/95→01/04	47 / 64										
1.9 SDI	11/95→01/04	47 / 64	Luc		2194502	[–] 21945 16.2	9K-T-514501→		Ate	91052400	ø 230 x 32	9K-Y-500748→
60 1.4	11/95→01/04	44 / 60										
75 1.6	11/95→09/00	55 / 75	Luc		82062800				Ate	97006600		→9K-Y-500747
				PRO	92041703	ø 256 x 13 x 39.2	→9K-T-514500		Ate	97011300		9K-Y-500748→
				PRO	92036803	ø 256 x 20 x 38.7	9K-T-514501→		Ate	84044400	bore ø 20.6 ø 230 x 40	→9K-Y-500747
					TPM0008				Ate	84052401	bore ø 20.6 ø 230 x 32	9K-Y-500748→
										94029500	ø 230 x 39	9K-Y-500748→
										94018900	ø 230,0 x 51	→9K-Y-500747
CADDY II Estate (9K9B) 11/95→01/04													
		749200	Luc		2016804	[–] 20168 19.6	→9K-T-514500		Ate	91044400	ø 230 x 40	→9K-Y-500747
1.4	11/95→01/04	44 / 60										
1.9 D	11/95→01/04	47 / 64	Luc		2194502	[–] 21945 16.2	9K-T-514501→		Ate	91052400	ø 230 x 32	9K-Y-500748→
1.9 SDI	11/95→01/04	47 / 64	Luc		82062800				Ate	97006600		→9K-Y-500747
				PRO	92041703	ø 256 x 13 x 39.2	→9K-T-514500		Ate	97011300		9K-Y-500748→
				PRO	92036803	ø 256 x 20 x 38.7	9K-T-514501→		Ate	84044400	bore ø 20.6 ø 230 x 40	→9K-Y-500747
					TPM0008				Ate	84052401	bore ø 20.6 ø 230 x 32	9K-Y-500748→
										94029500	ø 230 x 39	9K-Y-500748→
										94018900	ø 230,0 x 51	→9K-Y-500747
		749300	Luc		2194502	[–] 21945 16.2			Ate	91052400	ø 230 x 32	
1.4 16V	08/00→01/04	55 / 75	Luc		82062800				Ate	97011300		
				PRO	92036803	ø 256 x 20 x 38.7			Ate	84052401	bore ø 20.6 ø 230 x 32	
					TPM0008					94029500	ø 230 x 39	

30 kW / hp

CADDY II Estate (9K9B) 11/95→01/04

749400

1.6	04/96→07/03	65 / 88
1.6	06/97→09/00	55 / 75
1.7 SDI	07/96→09/00	42 / 57
1.9 TDI	10/96→01/04	66 / 90

Luc		2194502	[–] 21945 16.2		Ate		91044400	ø 230 x 40	→9K-Y-500747
Luc		82062800			Ate		91052400	ø 230 x 32	9K-Y-500748→
	PRO	92036803	ø 256 x 20 x 38.7		Ate		97006600		→9K-Y-500747
		TPM0008			Ate		97011300		9K-Y-500748→
					Ate		84044400	bore ø 20.6 ø 230 x 40	→9K-Y-500747
					Ate		84052401	bore ø 20.6 ø 230 x 32	9K-Y-500748→
							94029500	ø 230 x 39	9K-Y-500748→
							94018900	ø 230,0 x 51	→9K-Y-500747

CADDY II Kasten (9K9A) 11/95→01/04 → CADDY II Box (9K9A), Page 1200

CADDY II Kombi (9K9B) 11/95→01/04 → CADDY II Estate (9K9B), Page 1200

CADDY II Pickup (9U7) 06/96→12/00

749500

1.6	06/96→12/00	55 / 75
1.9 D	06/96→12/00	47 / 64

Gir		2166201	[–] 21662 17.8				91044700	ø 200 x 40	
Luc		82062800			Ate		97006500		
		92090200	ø 236 x 12.7 x 45.6				83044701	bore ø 19 ø 200 x 40	⊖ ABS
		TPM0008					84044705	bore ø 15.9 ø 200 x 40	⊕ ABS
							84044707	bore ø 22.2 ø 200 x 40	⊖ ABS
							94006700	ø 200,0 x 49.8	

CADDY II Pick-up (9U7) 06/96→12/00 → CADDY II Pickup (9U7), Page 1201

CADDY II VAN (9K9B) 11/95→01/04 → CADDY II Estate (9K9B), Page 1200

CADDY III Box (2KA, 2KH, 2CA, 2CH) 03/04→08/10

749600

1.2 TSI	09/10→	63 / 86
1.6 TDI	08/10→	55 / 75

Ate		2313101	[+] 23131 19.7		Luc		2355402	[–] 23554 17.2		
Ate	epad	2313181	[+] 23131 19.7		Luc	epad	2355481	[–] 23554 17.2		
	PRO	92120703	ø 280 x 22 x 49.9		Luc		82037300			
	PRO	92120705	ø 280 x 22 x 49.9			PRO	92120903	ø 255 x 10 x 51.6		
		TPM0008					TPM0008			

749700

1.2 TSI	09/10→	77 / 105
2.0 TDI	08/10→	81 / 110

Ate		2358701	[+] 23587 20.3		Bos		2456301	[–] 24563 17.7		
Ate	epad	2358781	[+] 23587 20.3		Bos		82054300			
Ate		82076800				PRO	92224903	ø 272 x 10 x 48.3		
	PRO	92120803	ø 288 x 25 x 49.8				TPM0008			
	PRO	92120805	ø 288 x 25 x 49.8							
		TPM0008								

749800

1.4	03/04→05/06	55 / 75

Ate		2313101	[+] 23131 19.7	PR 1ZM,1ZF	Luc		2391401	[o] 23914 17.2		
Ate	epad	2313181	[+] 23131 19.7	PR 1ZM,1ZF	Luc	epad	2391481	[o] 23914 17.2		
Ate		2358701	[+] 23587 20.3	PR 1ZE	Luc		82509000			
Ate	epad	2358781	[+] 23587 20.3	PR 1ZE	Luc		82063300			
Ate		82062900		PR 1ZM,1ZF		PRO	92121103	ø 256 x 12 x 48.4		
Ate		82076800		PR 1ZE			TPM0008			
	PRO	92120703	ø 280 x 22 x 49.9	PR 1ZM,1ZF						
	PRO	92120705	ø 280 x 22 x 49.9	PR 1ZM,1ZF						
	PRO	92120803	ø 288 x 25 x 49.8	PR 1ZE						
	PRO	92120805	ø 288 x 25 x 49.8	PR 1ZE						
		TPM0008								

T - Z

CADDY III Box (2KA, 2KH, 2CA, 2CH) 03/04→08/10

		kW / hp												
		749900	Ate		2313101	[+] 23131	19.7	PR 1ZM,1ZF	Luc		2355402	[–] 23554	17.2	PR 1ZF,1ZM
1.4 16V	05/06→08/10	59 / 80												
1.9 TDI	09/05→08/10	55 / 75	Ate	epad	2313181	[+] 23131	19.7	PR 1ZM,1ZF	Luc	epad	2355481	[–] 23554	17.2	PR 1ZF,1ZM
2.0 SDI	03/04→08/10	51 / 70												
			Ate		2358701	[+] 23587	20.3	PR 1ZE	Luc		2391401	[o] 23914	17.2	PR 1ZE,1LJ
			Ate	epad	2358781	[+] 23587	20.3	PR 1ZE	Luc	epad	2391481	[o] 23914	17.2	PR 1ZE,1LJ
			Ate		82062900			PR 1ZM,1ZF	Luc		82509000			PR 1ZE,1LJ
			Ate		82076800			PR 1ZE	Luc		82063300			PR 1ZF,1ZM
				PRO	92120703	ø 280 x 22 x 49.9		PR 1ZM,1ZF		PRO	92120903	ø 255 x 10 x 51.6		PR 1ZF,1ZM
				PRO	92120705	ø 280 x 22 x 49.9		PR 1ZM,1ZF		PRO	92121103	ø 256 x 12 x 48.4		PR 1ZE,1LJ
				PRO	92120803	ø 288 x 25 x 49.8		PR 1ZE			TPM0008			
				PRO	92120805	ø 288 x 25 x 49.8		PR 1ZE						
					TPM0008									
		750000	Ate		2358701	[+] 23587	20.3		Luc		2391401	[o] 23914	17.2	
1.6	04/04→	75 / 102												
			Ate	epad	2358781	[+] 23587	20.3		Luc	epad	2391481	[o] 23914	17.2	
			Ate		82076800				Luc		82509000			
				PRO	92120803	ø 288 x 25 x 49.8			Luc		82063300			
				PRO	92120805	ø 288 x 25 x 49.8				PRO	92121103	ø 256 x 12 x 48.4		
					TPM0008						TPM0008			
		750100	Ate		2313101	[+] 23131	19.7	PR 1ZF	Luc		2355402	[–] 23554	17.2	PR 2E2,1ZF
1.6 BiFuel	05/11→	75 / 102												
2.0 TDI 4motion	12/10→	62 / 85	Ate	epad	2313181	[+] 23131	19.7	PR 1ZF	Luc	epad	2355481	[–] 23554	17.2	PR 2E2,1ZF
			Ate		2358701	[+] 23587	20.3	PR 1ZE PR 1ZA	Bos		2456301	[–] 24563	17.7	PR 2E3+1ZF PR 1ZA,1ZE
			Ate	epad	2358781	[+] 23587	20.3	PR 1ZE PR 1ZA	Luc		82037300			PR 2E2+1ZF
			Ate		82076800			PR 1ZE PR 1ZA	Bos		82054300			PR 2E3+1ZF PR 1ZA,1ZE
				PRO	92120503	ø 312 x 25 x 49.7		PR 1ZA		PRO	92120903	ø 255 x 10 x 51.6		PR 2E2+1ZF
				PRO	92120703	ø 280 x 22 x 49.9		PR 1ZF		PRO	92224903	ø 272 x 10 x 48.3		PR 2E3+1ZF PR 1ZA,1ZE
				PRO	92120705	ø 280 x 22 x 49.9		PR 1ZF			TPM0008			
				PRO	92120803	ø 288 x 25 x 49.8		PR 1ZE						
				PRO	92120805	ø 288 x 25 x 49.8		PR 1ZE						
					TPM0008									
		750200	Ate		2358701	[+] 23587	20.3		Bos		2456301	[–] 24563	17.7	
1.6 TDI	08/10→	75 / 102												
2.0 TDI 4motion	08/10→	81 / 110	Ate	epad	2358781	[+] 23587	20.3		Bos		82054300			
			Ate		82062900					PRO	92224903	ø 272 x 10 x 48.3		
			Ate		82076800						TPM0008			
				PRO	92120503	ø 312 x 25 x 49.7		PR 1ZA						
				PRO	92120803	ø 288 x 25 x 49.8		PR 1ZE						
				PRO	92120805	ø 288 x 25 x 49.8		PR 1ZE						
					TPM0008									
		750300	Ate		2358701	[+] 23587	20.3		Luc		2391401	[o] 23914	17.2	
1.9 TDI	04/04→08/10	77 / 105												
1.9 TDI 4motion	11/08→08/10	77 / 105	Ate	epad	2358781	[+] 23587	20.3		Luc	epad	2391481	[o] 23914	17.2	
			Ate		82062900				Luc		82509000			
			Ate		82076800				Luc		82063300			

		kW / hp											
CADDY III Box (2KA, 2KH, 2CA, 2CH) 03/04→08/10													
750300													
1.9 TDI	04/04→08/10	77 / 105		PRO	92120803	ø 288 x 25 x 49.8			PRO	92121103	ø 256 x 12 x 48.4	
1.9 TDI 4motion	11/08→08/10	77 / 105		PRO	92120805	ø 288 x 25 x 49.8				TPM0008		
					TPM0008							
750400			Ate		2358701	[+] 23587 20.3		Bos		2456301	[–] 24563 17.7	PR 1ZA,1ZE
2.0 EcoFuel	04/06→	80 / 109	Ate	epad	2358781	[+] 23587 20.3		Luc		2391401	[o] 23914 17.2	PR 1ZE
			Ate		82062900			Luc	epad	2391481	[o] 23914 17.2	PR 1ZE
			Ate		82076800			Bos		82054300		PR 1ZA,1ZE
				PRO	92120503	ø 312 x 25 x 49.7	PR 1ZA	Luc		82509000		PR 1ZE
				PRO	92120803	ø 288 x 25 x 49.8	PR 1ZE	Luc		82063300		PR 1ZE
				PRO	92120805	ø 288 x 25 x 49.8	PR 1ZE		PRO	92121103	ø 256 x 12 x 48.4	PR 1ZE
					TPM0008				PRO	92224903	ø 272 x 10 x 48.3	PR 1ZA,1ZE
										TPM0008		
750500			Ate		2358701	[+] 23587 20.3		Luc		2391401	[o] 23914 17.2	
2.0 TDI	09/07→08/10	103 / 140	Ate	epad	2358781	[+] 23587 20.3		Luc	epad	2391481	[o] 23914 17.2	
			Ate		82076800			Luc		82509000		
				PRO	92120503	ø 312 x 25 x 49.7		Luc		82063300		
					TPM0008				PRO	92121103	ø 256 x 12 x 48.4	
										TPM0008		
750600			Ate		2313101	[+] 23131 19.7		Luc		2355402	[–] 23554 17.2	
2.0 TDI	11/10→	62 / 85	Ate	epad	2313181	[+] 23131 19.7		Luc	epad	2355481	[–] 23554 17.2	
				PRO	92120703	ø 280 x 22 x 49.9		Luc		82037300		
				PRO	92120705	ø 280 x 22 x 49.9			PRO	92120903	ø 255 x 10 x 51.6	
					TPM0008				PRO	92224903	ø 272 x 10 x 48.3	
										TPM0008		
750700			Ate		2358701	[+] 23587 20.3		Bos		2456301	[–] 24563 17.7	
2.0 TDI	05/12→	125 / 170										
2.0 TDI 16V	11/10→	103 / 140	Ate	epad	2358781	[+] 23587 20.3		Bos		82054300		
2.0 TDI 16V 4motion	11/10→	103 / 140	Ate		82076800				PRO	92224903	ø 272 x 10 x 48.3	
				PRO	92120503	ø 312 x 25 x 49.7				TPM0008		
					TPM0008							
CADDY III Estate (2KB, 2KJ, 2CB, 2CJ) 03/04→08/10													
750800			Ate		2313101	[+] 23131 19.7		Luc		2355402	[–] 23554 17.2	
1.2 TSI	09/10→	63 / 86										
1.6 TDI	08/10→	55 / 75	Ate	epad	2313181	[+] 23131 19.7		Luc	epad	2355481	[–] 23554 17.2	
				PRO	92120703	ø 280 x 22 x 49.9		Luc		82037300		
				PRO	92120705	ø 280 x 22 x 49.9			PRO	92120903	ø 255 x 10 x 51.6	
					TPM0008					TPM0008		
750900			Ate		2358701	[+] 23587 20.3		Bos		2456301	[–] 24563 17.7	
1.2 TSI	09/10→	77 / 105										
2.0 TDI	08/10→	81 / 110	Ate	epad	2358781	[+] 23587 20.3		Bos		82054300		
			Ate		82076800				PRO	92224903	ø 272 x 10 x 48.3	
				PRO	92120803	ø 288 x 25 x 49.8				TPM0008		
				PRO	92120805	ø 288 x 25 x 49.8						

T - Z

30 kW / hp

CADDY III Estate (2KB, 2KJ, 2CB, 2CJ) 03/04→08/10

750900				TPM0008										
1.2 TSI	09/10→	77 / 105												
2.0 TDI	08/10→	81 / 110												
751000			Ate	2313101	[+] 23131 19.7	PR 1ZM,1ZF	Luc	2391401	[o] 23914 17.2					
1.4	03/04→05/06	55 / 75	Ate	2313181	[+] 23131 19.7	PR 1ZM,1ZF	Luc	2391481	[o] 23914 17.2					
			Ate	2358701	[+] 23587 20.3	PR 1ZE	Luc	82509000						
			Ate	2358781	[+] 23587 20.3	PR 1ZE	Luc	82063300						
			Ate	82062900		PR 1ZM,1ZF		92121103	ø 256 x 12 x 48.4					
			Ate	82076800		PR 1ZE		TPM0008						
				92120703	ø 280 x 22 x 49.9	PR 1ZM,1ZF								
				92120705	ø 280 x 22 x 49.9	PR 1ZM,1ZF								
				92120803	ø 288 x 25 x 49.8	PR 1ZE								
				92120805	ø 288 x 25 x 49.8	PR 1ZE								
				TPM0008										
751100			Ate	2313101	[+] 23131 19.7	PR 1ZM,1ZF	Luc	2355402	[–] 23554 17.2	PR 1ZF,1ZM				
1.4 16V	05/06→08/10	59 / 80												
1.9 TDI	09/05→08/10	55 / 75	Ate	2313181	[+] 23131 19.7	PR 1ZM,1ZF	Luc	2355481	[–] 23554 17.2	PR 1ZF,1ZM				
2.0 SDI	03/04→08/10	51 / 70	Ate	2358701	[+] 23587 20.3	PR 1ZE	Luc	2391401	[o] 23914 17.2	PR 1ZE,1LJ				
			Ate	2358781	[+] 23587 20.3	PR 1ZE	Luc	2391481	[o] 23914 17.2	PR 1ZE,1LJ				
			Ate	82062900		PR 1ZM,1ZF	Luc	82509000		PR 1ZE,1LJ				
			Ate	82076800		PR 1ZE	Luc	82063300						
				92120703	ø 280 x 22 x 49.9	PR 1ZM,1ZF		92120903	ø 255 x 10 x 51.6	PR 1ZF,1ZM				
				92120705	ø 280 x 22 x 49.9	PR 1ZM,1ZF		92121103	ø 256 x 12 x 48.4	PR 1ZE,1LJ				
				92120803	ø 288 x 25 x 49.8	PR 1ZE		TPM0008						
				92120805	ø 288 x 25 x 49.8	PR 1ZE								
				TPM0008										
751200			Ate	2358701	[+] 23587 20.3		Luc	2391401	[o] 23914 17.2					
1.6	04/04→	75 / 102												
1.6	03/05→	74 / 101	Ate	2358781	[+] 23587 20.3		Luc	2391481	[o] 23914 17.2					
1.9 TDI	04/04→08/10	77 / 105												
1.9 TDI 4motion	05/08→08/10	77 / 105	Ate	82076800			Luc	82509000						
				92120803	ø 288 x 25 x 49.8		Luc	82063300						
				92120805	ø 288 x 25 x 49.8			92121103	ø 256 x 12 x 48.4					
				TPM0008				TPM0008						
751300			Ate	2313101	[+] 23131 19.7	PR 1ZM,1ZF	Luc	2355402	[–] 23554 17.2	PR 1ZF,1ZM				
1.6	01/05→12/09	65 / 88												
1.9 TDI	10/05→06/09	48 / 65	Ate	2313181	[+] 23131 19.7	PR 1ZM,1ZF	Luc	2355481	[–] 23554 17.2	PR 1ZF,1ZM				
			Ate	2358701	[+] 23587 20.3	PR 1ZE,1LJ	Luc	2391401	[o] 23914 17.2	PR 1ZE,1LJ				
			Ate	2358781	[+] 23587 20.3	PR 1ZE,1LJ	Luc	2391481	[o] 23914 17.2	PR 1ZE,1LJ				
			Ate	82076800		PR 1ZE,1LJ	Luc	82509000						
				92120503	ø 312 x 25 x 49.7	PR 1LJ		92120903	ø 255 x 10 x 51.6	PR 1ZF,1ZM				
				92120703	ø 280 x 22 x 49.9	PR 1ZM,1ZF		92121103	ø 256 x 12 x 48.4	PR 1ZE,1LJ				
				92120705	ø 280 x 22 x 49.9	PR 1ZM,1ZF		TPM0008						
				92120803	ø 288 x 25 x 49.8	PR 1ZE								
				92120805	ø 288 x 25 x 49.8	PR 1ZE								
				TPM0008										

T - Z

CADDY III Estate (2KB, 2KJ, 2CB, 2CJ) 03/04→08/10

		kW / hp												
751400														
1.6 BiFuel	05/11→	75 / 102	Ate		2313101	[+] 23131	19.7	PR 1ZF	Luc		2355402	[–] 23554	17.2	PR 2E2,1ZF
			Ate	epad	2313181	[+] 23131	19.7	PR 1ZF	Luc	epad	2355481	[–] 23554	17.2	PR 2E2,1ZF
			Ate		2358701	[+] 23587	20.3	PR 1ZE PR 1ZA	Bos		2456301	[–] 24563	17.7	PR 2E3+1ZF PR 1ZA,1ZE
			Ate	epad	2358781	[+] 23587	20.3	PR 1ZE PR 1ZA	Luc		82037300			PR 2E2+1ZF
			Ate		82076800			PR 1ZE PR 1ZA	Bos		82054300			PR 2E3+1ZF PR 1ZA,1ZE
				PRO	92120503	ø 312 x 25 x 49.7		PR 1ZA		PRO	92120903	ø 255 x 10 x 51.6		PR 2E2+1ZF
				PRO	92120703	ø 280 x 22 x 49.9		PR 1ZF		PRO	92224903	ø 272 x 10 x 48.3		PR 2E3+1ZF PR 1ZA,1ZE
				PRO	92120705	ø 280 x 22 x 49.9		PR 1ZF			TPM0008			
				PRO	92120803	ø 288 x 25 x 49.8		PR 1ZE						
				PRO	92120805	ø 288 x 25 x 49.8		PR 1ZE						
					TPM0008									
751500														
1.6 TDI	08/10→	75 / 102	Ate		2358701	[+] 23587	20.3		Bos		2456301	[–] 24563	17.7	
2.0 TDI 4motion	08/10→	81 / 110	Ate	epad	2358781	[+] 23587	20.3		Bos		82054300			
			Ate		82062900					PRO	92224903	ø 272 x 10 x 48.3		
			Ate		82076800						TPM0008			
				PRO	92120503	ø 312 x 25 x 49.7		PR 1LJ,1ZA						
				PRO	92120803	ø 288 x 25 x 49.8		PR 1ZE						
				PRO	92120805	ø 288 x 25 x 49.8		PR 1ZE						
					TPM0008									
751600														
2.0 EcoFuel	04/06→	80 / 109	Ate		2358701	[+] 23587	20.3		Bos		2456301	[–] 24563	17.7	PR 1ZA,1ZE
			Ate	epad	2358781	[+] 23587	20.3		Luc		2391401	[o] 23914	17.2	PR 1ZE
			Ate		82062900				Luc	epad	2391481	[o] 23914	17.2	PR 1ZE
			Ate		82076800				Bos		82054300			PR 1ZA,1ZE
				PRO	92120503	ø 312 x 25 x 49.7		PR 1ZA	Luc		82509000			PR 1ZE
				PRO	92120803	ø 288 x 25 x 49.8		PR 1ZE	Luc		82063300			PR 1ZE
				PRO	92120805	ø 288 x 25 x 49.8		PR 1ZE		PRO	92121103	ø 256 x 12 x 48.4		PR 1ZE
					TPM0008					PRO	92224903	ø 272 x 10 x 48.3		PR 1ZA, 1ZE
										PRO	92224903	ø 272 x 10 x 48.3		PR 1ZA,1ZE
											TPM0008			
751700														
2.0 TDI	09/07→08/10	103 / 140	Ate		2358701	[+] 23587	20.3		Luc		2391401	[o] 23914	17.2	
			Ate	epad	2358781	[+] 23587	20.3		Luc	epad	2391481	[o] 23914	17.2	
			Ate		82076800				Luc		82509000			
				PRO	92120503	ø 312 x 25 x 49.7			Luc		82063300			
					TPM0008					PRO	92121103	ø 256 x 12 x 48.4		
											TPM0008			
751800														
2.0 TDI	05/12→	125 / 170	Ate		2358701	[+] 23587	20.3		Bos		2456301	[–] 24563	17.7	
2.0 TDI 16V	11/10→	103 / 140	Ate	epad	2358781	[+] 23587	20.3		Bos		82054300			
2.0 TDI 16V 4motion	11/10→	103 / 140	Ate		82076800					PRO	92224903	ø 272 x 10 x 48.3		
				PRO	92120503	ø 312 x 25 x 49.7					TPM0008			
					TPM0008									

30 kW / hp												
CADDY III Kasten (2KA, 2KH, 2CA, 2CH) 03/04→08/10 → CADDY III Box (2KA, 2KH, 2CA, 2CH), Page 1201												
CADDY III Kombi (2KB, 2KJ, 2CB, 2CJ) 03/04→08/10 → CADDY III Estate (2KB, 2KJ, 2CB, 2CJ), Page 1203												
CADDY Mk II (9K9A) 11/95→01/04 → CADDY II Box (9K9A), Page 1200												
CADDY Mk II (9U7) 06/96→12/00 → CADDY II Pickup (9U7), Page 1201												
CAROCHA 09/92→08/03 → KAEFER, Page 1234												
CC (357) 05/08→01/12 → PASSAT CC (357), Page 1247												
CC (358) 11/11→												
		751900	Ate		2358701	[+] 23587 20.3		Luc		2448301	[–] 24483 17.2	
1.4 TSI	11/11→	118 / 160										
1.8 TSI	11/11→	112 / 152	Ate		2358781	[+] 23587 20.3		Luc		2448381	[–] 24483 17.2	
1.8 TSI	11/11→	118 / 160										
2.0 TDI	11/11→	100 / 136										
2.0 TDI	11/11→	103 / 140	Ate		82062900			Luc		82509000		
2.0 TDI	11/11→	125 / 170										
2.0 TDI	12/12→	130 / 177	Ate		82076800			Luc		82063300		
2.0 TDI 4motion	11/11→	103 / 140										
2.0 TDI 4motion	11/11→	125 / 170										
2.0 TSI	11/11→	147 / 200		PRO	92120503	ø 312 x 25 x 49.7			PRO	92140803	ø 282 x 12 x 48.5	
2.0 TSI	11/11→	155 / 210										
					TPM0008					TPM0008		
		752000	Ate		2358701	[+] 23587 20.3	PR 1ZM,1ZG	Luc		2448301	[–] 24483 17.2	PR 1KW
2.0 TDI 4motion	12/12→	130 / 177										
3.6 FSI	11/11→	206 / 280	Ate		2358781	[+] 23587 20.3	PR 1ZM,1ZG	Luc		2448302	[–] 24483 17.2	PR 2EA
3.6 FSI 4motion	11/11→	206 / 280										
			TRW		2473801	[+] 24738 20	PR 1LA, 1LB	Luc		2448381	[–] 24483 17.2	PR 1KW
			Ate		82076800		PR 1ZM,1ZG	Luc		2448382	[–] 24483 17.2	PR 2EA
				PRO	92120503	ø 312 x 25 x 49.7	PR 1ZM,1ZG	Luc		82502000		PR 2EA
				PRO	92229803	ø 340 x 30 x 49.7	PR 1LA,1LB	Luc		82509000		PR 1KW
					TPM0008				PRO	92140803	ø 282 x 12 x 48.5	PR 1KW
									PRO	92140703	ø 310 x 22 x 48.5	PR 2EA
										TPM0008		
		752100	Ate		2380101	[+] 23801 20.3	PR 1LK Ø 345 mm	Luc		2448302	[–] 24483 17.2	
3.6 FSI 4motion	11/11→	220 / 300										
			Ate		2380181	[+] 23801 20.3	PR 1LK Ø 345 mm	Luc		2448382	[–] 24483 17.2	
			TRW		2473801	[+] 24738 20	PR 1LA,1LB Ø 340 mm	Luc		82502000		
			Ate		82059200		Teves	Luc		82063300		
			Ate		82062900		Teves		PRO	92140703	ø 310 x 22 x 48.5	
				PRO	92120603	ø 345 x 30 x 49.9	PR 1LK			TPM0008		
				PRO	92229803	ø 340 x 30 x 49.7	PR 1LA,1LB					
					TPM0008							
CITYGOLF 06/96→08/09												
		752200	Kel		2088707	[–] 20887 15.3						
1.3	01/99→08/09	52 / 71										
1.3	01/01→12/02	48 / 65	Kel		82026700							
1.4	12/99→08/09	62 / 84										
1.4	02/02→08/09	51 / 69										
1.4	02/02→08/09	54 / 73										
1.6	06/96→12/99	60 / 82										
1.6	12/99→08/09	74 / 101										
1.8	06/96→12/99	92 / 125										
1.8	06/07→08/09	90 / 122										
COCCINELLE 09/92→08/03 → KAEFER, Page 1234												
COMBI Autobús (T2) 07/92→07/00 → KOMBI Bus (T2), Page 1236												
COMBI Bus (T2) 07/92→07/00 → KOMBI Bus (T2), Page 1236												
CRAFTER 30-35 Bus (2E_) 04/06→												
		752300	Bre		2919202	[+] 29192 20.9		Bos		2919001	[+] 29190 19	
2.0 TDI	05/11→	80 / 109										
2.0 TDI	05/11→	100 / 136			98033700	L103				98033800	L95	
2.0 TDI	07/11→	120 / 163										
2.0 TDI	10/11→	105 / 142										
2.0 TDI 4motion	11/11→	120 / 163	Bre		82071000			Bos		82054200		
2.5 TDI	04/06→	80 / 109										
2.5 TDI	04/06→	100 / 136			93143200	ø 300 x 28 x 68.5				93143300	ø 298 x 16 x 71	
2.5 TDI	04/06→07/11	65 / 88										
2.5 TDI	04/06→07/11	120 / 163										

T - Z

30 kW / hp											
CRAFTER 30-35 Bus (2E_) 04/06→											
752300											
2.0 TDI	05/11→	80 / 109		TPM0002				TPM0002			
2.0 TDI	05/11→	100 / 136						91066800	ø 180 x 25		
2.0 TDI	07/11→	120 / 163						97035600			
2.0 TDI	10/11→	105 / 142									
2.0 TDI 4motion	11/11→	120 / 163									
2.5 TDI	04/06→	80 / 109									
2.5 TDI	04/06→	100 / 136									
2.5 TDI	04/06→07/11	65 / 88									
2.5 TDI	04/06→07/11	120 / 163									
752400											
2.0 TDI	11/13→	84 / 114	Bre	2920002	[o] 29200 20.9	PR 0WF	Bos	2921702	[o] 29217 20.6	PR 0WF	
			Bre	2919202	[+] 29192 20.9	PR 0WC,0WL	Bos	2919001	[+] 29190 19	PR 0WC,0WL	
				98033700	L103	PR 1X2		98033800	L95	PR 0WC,0WL	
				98036500	L85	PR 1X9,0X9		98036500	L85	PR 0WF	
				93143200	ø 300 x 28 x 68.5			93143300	ø 298 x 16 x 71	PR 0WC,0WL	
				TPM0002				93143400	ø 303 x 28 x 93	PR 0WF	
								TPM0002			
CRAFTER 30-50 Box (2E_) 04/06→											
752500			Bre	2920002	[o] 29200 20.9	⊕ CR 50	Bos	2921702	[o] 29217 20.6	⊕ CR 50	
2.0 TDI	05/11→	80 / 109	Bre	2919202	[+] 29192 20.9	⊕ CR 30/CR 35	Bos	2919001	[+] 29190 19	⊕ CR 30/CR 35	
2.0 TDI	05/11→	100 / 136		98033700	L103			98033800	L95	⊕ CR 30/CR 35	
2.0 TDI	07/11→	120 / 163	Bre	82071000				98036500	L85	⊕ CR 50	
2.0 TDI	10/11→	105 / 142		93143200	ø 300 x 28 x 68.5		Bos	82054200			
2.0 TDI 4motion	11/11→	120 / 163		TPM0002				93143300	ø 298 x 16 x 71	⊕ CR 30/CR 35	
								93143400	ø 303 x 28 x 93	⊕ CR 50	
								TPM0002		⊕ CR 30/CR 35	
								91066800	ø 180 x 25	⊕ CR 30/CR 35	
								91069000	ø 172 x 42	⊕ CR 50	
								97035600		⊕ CR 30/CR 35	
							Ate	97039500		⊕ CR 50	
752600			Bre	2920002	[o] 29200 20.9	PR 0WF	Bos	2921702	[o] 29217 20.6	PR 0WF	
2.0 TDI	11/13→	84 / 114	Bre	2919202	[+] 29192 20.9	PR 0WC,0WL	Bos	2919001	[+] 29190 19	PR 0WC,0WL	
				98033700	L103	PR 1X2		98033800	L95	PR 0WC,0WL	
				98036500	L85	PR 1X9,0X9		98036500	L85	PR 0WF	
				93143200	ø 300 x 28 x 68.5			93143300	ø 298 x 16 x 71	PR 0WC,0WL	
				TPM0002				93143400	ø 303 x 28 x 93	PR 0WF	
								TPM0002			
752700			Bre	2920002	[o] 29200 20.9	⊕ CR 50	Bos	2921702	[o] 29217 20.6	⊕ CR 50	
2.5 TDI	04/06→	80 / 109	Bre	2919202	[+] 29192 20.9	⊕ CR 30/CR 35	Bos	2919001	[+] 29190 19	⊕ CR 30/CR 35	
2.5 TDI	04/06→	100 / 136		98033700	L103			98033800	L95	⊕ CR 30/CR 35	
2.5 TDI	04/06→07/11	65 / 88								⊕ CR 50 →06/06	
2.5 TDI	04/06→07/11	120 / 163	Bre	82071000				98036500	L85	⊕ CR 50 06/06→	
				93143200	ø 300 x 28 x 68.5		Bos	82054200			
				TPM0002				93143300	ø 298 x 16 x 71	⊕ CR 30/CR 35	
								93143400	ø 303 x 28 x 93	⊕ CR 50	
								TPM0002		⊕ CR 30/CR 35	
								91066800	ø 180 x 25	⊕ CR 30/CR 35	

T - Z

		kW / hp											
CRAFTER 30-50 Box (2E_) 04/06→													
		752700											
2.5 TDI	04/06→	80 / 109								91069000	ø 172 x 42	⊕ CR 50	
2.5 TDI	04/06→	100 / 136								97035600		⊕ CR 30/CR 35	
2.5 TDI	04/06→07/11	65 / 88							Ate	97039500		⊕ CR 50	
2.5 TDI	04/06→07/11	120 / 163											
CRAFTER 30-50 Kasten (2E_) 04/06→ → CRAFTER 30-50 Box (2E_), Page 1207													
CRAFTER 30-50 Platform/Chassis (2F_) 04/06→													
		752800	Bre	2920002	[o] 29200 20.9	⊕ CR 50			Bos	2921702	[o] 29217 20.6	⊕ CR 50	
2.0 TDI	05/11→	80 / 109											
2.0 TDI	05/11→	100 / 136	Bre	2919202	[+] 29192 20.9	⊕ CR 30/CR 35			Bos	2919001	[+] 29190 19	⊕ CR 30/CR 35	
2.0 TDI	07/11→	120 / 163		98033700	L103					98033800	L95	⊕ CR 30/CR 35	
2.0 TDI	10/11→	105 / 142	Bre	82071000						98036500	L85	⊕ CR 50	
2.0 TDI 4motion	11/11→	120 / 163		93143200	ø 300 x 28 x 68.5				Bos	82054200			
				TPM0002						93143300	ø 298 x 16 x 71	⊕ CR 30/CR 35	
										93143400	ø 303 x 28 x 93	⊕ CR 50	
										TPM0002		⊕ CR 30/CR 35	
										91066800	ø 180 x 25	⊕ CR 30/CR 35	
										91069000	ø 172 x 42	⊕ CR 50	
										97035600		⊕ CR 30/CR 35	
									Ate	97039500		⊕ CR 50	
		752900	Bre	2920002	[o] 29200 20.9	PR OWF			Bos	2921702	[o] 29217 20.6	PR OWF	
2.0 TDI	11/13→	84 / 114											
			Bre	2919202	[+] 29192 20.9	PR OWC,OWL			Bos	2919001	[+] 29190 19	PR OWC,OWL	
				98033700	L103	PR 1X2				98033800	L95	PR OWC,OWL	
				98036500	L85	PR 1X9,0X9				98036500	L85	PR OWF	
				93143200	ø 300 x 28 x 68.5					93143300	ø 298 x 16 x 71	PR OWC,OWL	
				TPM0002						93143400	ø 303 x 28 x 93	PR OWF	
										TPM0002			
		753000	Bre	2920002	[o] 29200 20.9	⊕ CR 50			Bos	2921702	[o] 29217 20.6	⊕ CR 50	
2.5 TDI	04/06→	80 / 109											
2.5 TDI	04/06→	100 / 136	Bre	2919202	[+] 29192 20.9	⊕ CR 30/CR 35			Bos	2919001	[+] 29190 19	⊕ CR 30/CR 35	
2.5 TDI	04/06→07/11	65 / 88		98033700	L103					98033800	L95	⊕ CR 30/CR 35	
2.5 TDI	04/06→07/11	120 / 163										⊕ CR 50 →06/06	
			Bre	82071000						98036500	L85	⊕ CR 50 06/06→	
				93143200	ø 300 x 28 x 68.5				Bos	82054200			
				TPM0002						93143300	ø 298 x 16 x 71	⊕ CR 30/CR 35	
										93143400	ø 303 x 28 x 93	⊕ CR 50	
										TPM0002		⊕ CR 30/CR 35	
										91066800	ø 180 x 25	⊕ CR 30/CR 35	
										91069000	ø 172 x 42	⊕ CR 50	
										97035600		⊕ CR 30/CR 35	
									Ate	97039500		⊕ CR 50	
CRAFTER 30-50 Pritsche/Fahrgestell (2F_) 04/06→ → CRAFTER 30-50 Platform/Chassis (2F_), Page 1208													
DERBY CLASSIC (6KV2) 11/95→07/05 → POLO CLASSIC (6KV2), Page 1258													
DERBY Sedán (6KV2) 11/95→07/05 → POLO CLASSIC (6KV2), Page 1258													
DERBY Sedán (9A4) 08/96→ → POLO Saloon (9A4), Page 1260													
DERBY Stufenheck (9A4) 08/96→ → POLO Saloon (9A4), Page 1260													
DERBY três volumes (6KV2) 11/95→07/05 → POLO CLASSIC (6KV2), Page 1258													

kW / hp

EOS (1F7, 1F8) 03/06→11/10

753100														
1.4 TSI	11/07→	90 / 122	Ate		2358701	[+] 23587 20.3		Luc		2355402	[–] 23554 17.2	
1.6 FSI	06/06→05/08	85 / 115										
2.0 FSI	03/06→05/08	110 / 150	Ate	epad	2358781	[+] 23587 20.3		Luc	epad	2355481	[–] 23554 17.2	
2.0 TSI	09/06→12/09	86 / 117										
			Ate		82062900			Luc		82037300		
			Ate		82076800			Luc		82063300		
				PRO	92120803	ø 288 x 25 x 49.8			PRO	92120903	ø 255 x 10 x 51.6	
				PRO	92120805	ø 288 x 25 x 49.8				TPM0008		
					TPM0008							
753200														
1.4 TSI	05/08→	118 / 160	Ate		2358701	[+] 23587 20.3		Luc		2355402	[–] 23554 17.2	
2.0 TDI	06/06→05/08	103 / 140										
2.0 TDI	11/10→	100 / 136	Ate	epad	2358781	[+] 23587 20.3		Luc	epad	2355481	[–] 23554 17.2	
2.0 TDI 16V	05/08→	103 / 140										
			Ate		82062900			Luc		82037300		
			Ate		82076800			Luc		82063300		
				PRO	92120503	ø 312 x 25 x 49.7			PRO	92120903	ø 255 x 10 x 51.6	
					TPM0008					TPM0008		
753300														
1.4 TSI	11/13→	92 / 125	Ate		2358701	[+] 23587 20.3		Luc		2355402	[–] 23554 17.2	PR 1KD
1.4 TSI	11/13→	110 / 150										
2.0 TFSI	11/13→	162 / 220	Ate	epad	2358781	[+] 23587 20.3		Luc	epad	2355481	[–] 23554 17.2	PR 1KD
			Ate		82076800		PR 1ZE,1ZA,1ZD	Bos		2456301	[–] 24563 17.7	PR 1KS
				PRO	92120503	ø 312 x 25 x 49.7	PR 1ZA,1ZD	Bos		82054300		PR 1KS
				PRO	92120803	ø 288 x 25 x 49.8	PR 1ZE	Luc		82509000		PR 1KD
				PRO	92120805	ø 288 x 25 x 49.8	PR 1ZE		PRO	92120903	ø 255 x 10 x 51.6	PR 1KD
					TPM0008				PRO	92224903	ø 272 x 10 x 48.3	PR 1KS
										TPM0008		
753400														
2.0 TFSI	03/06→	147 / 200	Ate		2358701	[+] 23587 20.3		Bos		2456301	[–] 24563 17.7	PR 1KS Ø 272 mm
			Ate	epad	2358781	[+] 23587 20.3		Luc		2391401	[o] 23914 17.2	PR 1KZ,1KJ Ø 286 mm
			Ate		82062900			Luc	epad	2391481	[o] 23914 17.2	PR 1KZ,1KJ Ø 286 mm
			Ate		82076800			Bos		82054300		PR 1KS
				PRO	92120503	ø 312 x 25 x 49.7		Luc		82509000		PR 1KZ,1KJ
					TPM0008			Luc		82063300		PR 1KZ,1KJ
									PRO	92140803	ø 282 x 12 x 48.5	PR 1KZ,1KJ
									PRO	92224903	ø 272 x 10 x 48.3	PR 1KS
										TPM0008		
753500														
2.0 TSI	11/09→	155 / 210	Ate		2358701	[+] 23587 20.3		Bos		2456301	[–] 24563 17.7	
			Ate	epad	2358781	[+] 23587 20.3		Bos		82054300		
			Ate		82062900				PRO	92224903	ø 272 x 10 x 48.3	
			Ate		82076800					TPM0008		
				PRO	92120503	ø 312 x 25 x 49.7						
					TPM0008							
753600														
3.2 V6	06/06→05/09	184 / 250	Ate		2358701	[+] 23587 20.3		Luc		2391401	[o] 23914 17.2	
			Ate	epad	2358781	[+] 23587 20.3		Luc	epad	2391481	[o] 23914 17.2	
			Ate		82062900			Luc		82509000		
			Ate		82076800			Luc		82063300		

T - Z

		kW / hp											
EOS (1F7, 1F8) 03/06→11/10													
		753600											
3.2 V6	06/06→05/09	184 / 250		PRO	92120503	ø 312 x 25 x 49.7			PRO	92140803	ø 282 x 12 x 48.5	
					TPM0008					TPM0008		
		753700	Ate		2380101	[+] 23801 20.3		Luc		2391402	[o] 23914 17.2	
3.6 V6	05/09→11/10	191 / 260	Ate	epad	2380181	[+] 23801 20.3		Luc	epad	2391482	[o] 23914 17.2	
			Ate		82062900			Luc		82502000		
			Ate		82071800			Luc		82063300		
				PRO	92120603	ø 345 x 30 x 49.9			PRO	92140703	ø 310 x 22 x 48.5	
					TPM0008					TPM0008		
ESCARABAJO 09/92→08/03 → KAEFER, Page 1234													
EUROVAN / CARAVELLE IV Bus (70XB, 70XC, 7DB, 7DW) 09/90→04/03 → TRANSPORTER IV Bus (70XB, 70XC, 7DB, 7DW), Page 1276													
EUROVAN IV Box (70XA) 07/90→04/03 → TRANSPORTER IV Box (70XA), Page 1273													
EUROVAN IV Caixa (70XA) 07/90→04/03 → TRANSPORTER IV Box (70XA), Page 1273													
EUROVAN IV Kasten (70XA) 07/90→04/03 → TRANSPORTER IV Box (70XA), Page 1273													
EUROVAN V Bus (7HB, 7HJ, 7EB, 7EJ, 7EF) 04/03→11/09 → TRANSPORTER V Bus (7HB, 7HJ, 7EB, 7EJ, 7EF), Page 1282													
FLIGHT A trois volumes (6KV2) 11/95→07/05 → POLO CLASSIC (6KV2), Page 1258													
FLIGHT CLASSIC (6KV2) 11/95→07/05 → POLO CLASSIC (6KV2), Page 1258													
FOX (5Z1, 5Z3) 10/03→													
		753800	Ate		2313001	[–] 23130 19.7	⊕ power steering			91044700	ø 200 x 40	
1.0	10/03→	53 / 72										
1.0	04/08→	54 / 73	Ate	epad	2313081	[–] 23130 19.7	⊕ power steering	Ate		97006500		
1.0 Total Flex	10/03→	53 / 72										
1.0 Total Flex	05/05→	54 / 73	VW		2186602	[–] 21866 17.2	⊖ power steering			84044706	bore ø 17.5 ø 200 x 40	→11/09
1.2	04/05→	40 / 55	Ate		82062900					94023800	ø 200,0 x 50.5	
				PRO	92082203	ø 256 x 22 x 36.5	⊕ power steering					
				PRO	92106803	ø 239 x 18 x 34.9	⊖ power steering					
					TPM0008							
		753900	Ate		2313001	[–] 23130 19.7	PR 1ZF	Ate		97006500		
1.0	04/13→	60 / 82										
1.6 Total Flex	10/03→01/05	76 / 103	Ate	epad	2313081	[–] 23130 19.7	PR 1ZF			TPM0008		
			VW		2186602	[–] 21866 17.2	PR 1ZN			94023800	ø 200,0 x 50.5	
				PRO	92082203	ø 256 x 22 x 36.5	PR 1ZF					
				PRO	92106803	ø 239 x 18 x 34.9	PR 1ZN					
					TPM0008							
		754000	Ate		2313001	[–] 23130 19.7	⊕ power steering			91044700	ø 200 x 40	
1.2	09/10→	44 / 60										
			Ate	epad	2313081	[–] 23130 19.7	⊕ power steering	Ate		97006500		
			VW		2186602	[–] 21866 17.2	⊖ power steering			94023800	ø 200,0 x 50.5	
			Ate		82062900							
				PRO	92082203	ø 256 x 22 x 36.5	⊕ power steering					
				PRO	92106803	ø 239 x 18 x 34.9	⊖ power steering					
					TPM0008							
		754100	Ate		2313001	[–] 23130 19.7				91044700	ø 200 x 40	
1.4	04/05→	55 / 75										
1.4 TDI	04/05→	51 / 70										
1.6	10/03→	74 / 101	Ate	epad	2313081	[–] 23130 19.7		Ate		97006500		
1.6 Total Flex	10/03→	74 / 101										
1.9 D	12/07→	47 / 64	Ate		82062900					84044706	bore ø 17.5 ø 200 x 40	
				PRO	92082203	ø 256 x 22 x 36.5				94023800	ø 200,0 x 50.5	

T - Z

		kW / hp											
FOX (5Z1, 5Z3) 10/03→													
		754100											
1.4	04/05→	55 / 75		TPM0008									
1.4 TDI	04/05→	51 / 70											
1.6	10/03→	74 / 101											
1.6 Total Flex	10/03→	74 / 101											
1.9 D	12/07→	47 / 64											
FUSCA 09/92→08/03 → KAEFER, Page 1234													
GOL 06/94→09/05													
		754200	Var	2354601	[–] 23546 16	Varga							
1.0	08/96→05/02	40 / 54											
1.0	08/97→05/02	51 / 69	Ate	2196202	[–] 21962 15	Teves							
1.0	09/97→09/05	51 / 69											
1.0	09/98→08/05	45 / 61											
1.0	06/02→07/03	45 / 61											
1.0	06/02→07/04	56 / 76											
1.0	06/02→09/05	48 / 65											
1.0	10/05→05/08	53 / 72											
1.0	05/10→	50 / 68											
1.0 Bifuel	06/02→09/05	48 / 65											
1.0 Hybrid	09/05→05/08	53 / 72											
1.0 Total Flex	10/05→05/08	50 / 68											
1.0 Turbo	08/97→07/04	82 / 111											
1.6	12/98→05/02	68 / 92											
1.6	12/98→05/08	73 / 99											
1.6	06/02→05/08	73 / 99											
1.6	08/02→05/08	68 / 92											
1.6	05/03→06/08	71 / 97											
1.6 Álcool	08/02→05/08	73 / 99											
1.6 Hybrid	09/05→05/08	68 / 92											
1.6 Hybrid Flex	09/05→05/08	67 / 91											
1.6 Rally	08/03→01/05	67 / 91											
1.8	06/94→08/99	75 / 102											
1.8	04/98→05/02	77 / 105											
1.8	06/02→05/08	73 / 99											
1.8 Hybrid Power Flex	02/05→05/08	73 / 99											
1.9 D	04/98→05/02	51 / 69											
2.0	08/95→07/00	107 / 146											
2.0	05/96→05/02	104 / 141											
2.0	10/96→05/02	85 / 116											
		754300	Ate	2196202	[–] 21962 15	Teves							
2.0 GTI	06/02→09/05	62 / 84											
GOL 06/08→													
		754400	VW	2186602	[–] 21866 17.2	PR 1LF,1LA			91044700	ø 200 x 40			
1.0	05/10→	50 / 68											
1.0 Total Flex	07/08→	54 / 73	Ate	82062900			Ate		97006500				
			PRO	92072003	ø 239 x 18 x 34.1				94022800	ø 200,0 x 50.5			
		754500	VW	2186602	[–] 21866 17.2	PR 1LF,1LA			91044700	ø 200 x 40			
1.4	12/10→	61 / 83											
1.6 16V Total Flex	06/08→	74 / 101	Ate	82062900			Ate		97006500				
1.6 Total Flex	07/09→	74 / 101											
			PRO	92036803	ø 256 x 20 x 38.7				94022800	ø 200,0 x 50.5			
GOL 07/08→ → VOYAGE, Page 1284													
GOL COUNTRY 08/96→07/02 → PARATI, Page 1242													
GOL COUNTRY 08/02→ → PARATI, Page 1242													
GOL COUNTRY 11/06→ → PARATI, Page 1243													
GOLF III Variant (1H5) 07/93→04/99													
		754600	Kel	2088710	[–] 20887 19.7	→1H-TB015953			91044700	ø 200 x 40			
1.4	07/93→04/99	40 / 55											
1.4	07/93→04/99	44 / 60	VW	2186601	[–] 21866 15.3	⊕ ABS 10/96→	Ate		97006500				
			VW	2186603	[–] 21866 19.7	1H-TB015954→ →04/96 05/96→ ⊖ ABS			84044706	bore ø 17.5 ø 200 x 40			
			Luc	2194502	[–] 21945 16.2	⊕ ABS 05/96→ →09/96			94006700	ø 200,0 x 49.8			
			Kel	82026700		→1H-TB015953							
			Luc	82062800		05/96→ →09/96 ⊕ ABS							
			Ate	82062900		→04/96 1H-TB015954→ ⊖ ABS							
			PRO	92010603	ø 239 x 12 x 35								
			PRO	92041703	ø 256 x 13 x 39.2	⊕ taxi							
			PRO	92012103	ø 239 x 20 x 38.7	⊕ ABS 10/96→							
			PRO	92036803	ø 256 x 20 x 38.7	⊕ ABS 05/96→ →09/96							
		754700	Luc	2016801	[–] 20168 16.2	→05/96	Luc		2355401	[–] 23554 15.2	⊕ rear disc brake →07/95		
1.6	07/94→04/99	74 / 101											

			kW / hp											
GOLF III Variant (1H5) 07/93→04/99														
		754700		Luc		**2194502**	[–] 21945 16.2	05/96→	Luc		**2355402**	[–] 23554 17.2	⊕ rear disc brake 08/95→
1.6	07/94→04/99	74 / 101		Luc		**82062800**			Luc		**2355481**	[–] 23554 17.2	⊕ rear disc brake 08/95→
					PRO	**92036803**	ø 256 x 20 x 38.7		Luc		**2355482**	[–] 23554 15.2	⊕ rear disc brake →07/95
									Luc		**82033000**		
									Luc		**82062800**		
											91044700	ø 200 x 40	⊕ rear drum brake
									Ate		**97006500**		⊕ rear drum brake
											83044701	bore ø 19 ø 200 x 40	⊕ rear drum brake
											84044703	bore ø 19 ø 200 x 40	⊕ rear drum brake
										PRO	**92154203**	ø 226 x 10 x 71.5	⊕ rear disc brake
										PRO	**92041803**	ø 226 x 10 x 71.5	⊕ rear disc brake
											94006700	ø 200,0 x 49.8	⊕ rear drum brake
		754800		Luc		**2016804**	[–] 20168 19.6		Luc		**2355401**	[–] 23554 15.2	⊕ rear disc brake →07/95
1.8	07/93→04/99	55 / 75											
1.8	07/93→04/99	66 / 90		Luc		**2194502**	[–] 21945 16.2	⊕ ABS 05/96→	Luc		**2355402**	[–] 23554 17.2	⊕ rear disc brake 08/95→
				Luc		**82062800**			Luc		**2355481**	[–] 23554 17.2	⊕ rear disc brake 08/95→
					PRO	**92041703**	ø 256 x 13 x 39.2		Luc		**2355482**	[–] 23554 15.2	⊕ rear disc brake →07/95
					PRO	**92036803**	ø 256 x 20 x 38.7	⊕ ABS 05/96→	Luc		**82033000**		
									Luc		**82062800**		
											91044700	ø 200 x 40	⊕ rear drum brake
									Ate		**97006500**		⊕ rear drum brake
											83044701	bore ø 19 ø 200 x 40	⊕ rear drum brake
											84044703	bore ø 19 ø 200 x 40	⊕ rear drum brake
										PRO	**92154203**	ø 226 x 10 x 71.5	⊕ rear disc brake
										PRO	**92041803**	ø 226 x 10 x 71.5	⊕ rear disc brake
											94006700	ø 200,0 x 49.8	⊕ rear drum brake
		754900		Luc		**2016804**	[–] 20168 19.6	1S-W-369001→	Luc		**2355401**	[–] 23554 15.2	⊕ rear disc brake →07/95
1.8 Syncro	10/94→04/99	66 / 90		Kel		**2088710**	[–] 20887 19.7	→1S-W-369000	Luc		**2355402**	[–] 23554 17.2	⊕ rear disc brake 08/95→
				Kel		**82026700**		→1SW369000	Luc		**2355481**	[–] 23554 17.2	⊕ rear disc brake 08/95→
				Luc		**82062800**		1SW369001→	Luc		**2355482**	[–] 23554 15.2	⊕ rear disc brake →07/95
					PRO	**92010603**	ø 239 x 12 x 35	→1S-W-369000	Luc		**82033000**		
					PRO	**92041703**	ø 256 x 13 x 39.2	1S-W-369001→	Luc		**82062800**		
									Ate		**91044400**	ø 230 x 40	⊕ rear drum brake
									Ate		**97006600**		
										PRO	**92154203**	ø 226 x 10 x 71.5	⊕ rear disc brake
										PRO	**92041803**	ø 226 x 10 x 71.5	⊕ rear disc brake
											94012000	ø 230,0 x 48.5	⊕ rear drum brake
		755000		Luc		**2016804**	[–] 20168 19.6				**91044700**	ø 200 x 40	
1.9 D	07/93→04/99	48 / 65											
1.9 TD	07/93→04/99	55 / 75		VW		**2186601**	[–] 21866 15.3	⊕ ABS 10/96→	Ate		**97006500**		
				Luc		**2194502**	[–] 21945 16.2	⊕ ABS 05/96→ →09/96			**83044701**	bore ø 19 ø 200 x 40	
				Luc		**82062800**					**84044703**	bore ø 19 ø 200 x 40	

T - Z

→

GOLF III Variant (1H5) 07/93→04/99

		kW / hp										
1.9 D	07/93→04/99	755000 48 / 65		PRO	92041703	ø 256 x 13 x 39.2				94006700	ø 200,0 x 49.8	
1.9 TD	07/93→04/99	55 / 75		PRO	92012103	ø 239 x 20 x 38.7	⊕ ABS 10/96→					
				PRO	92036803	ø 256 x 20 x 38.7	⊕ ABS 05/96→ →09/96					
1.9 SDI	07/95→04/99	755100 47 / 64	Luc		2016804	[–] 20168 19.6				91044700	ø 200 x 40	
			VW		2186601	[–] 21866 15.3	⊕ ABS	Ate		97006500		
			Luc		82062800					83044701	bore ø 19 ø 200 x 40	
				PRO	92041703	ø 256 x 13 x 39.2				84044703	bore ø 19 ø 200 x 40	
				PRO	92012103	ø 239 x 20 x 38.7	⊕ ABS			94006700	ø 200,0 x 49.8	
1.9 TDI	03/94→04/99	755200 66 / 90	Luc		2016804	[–] 20168 19.6		Luc		2355401	[–] 23554 15.2	⊕ rear disc brake →07/95
			Luc		2194502	[–] 21945 16.2	⊕ ABS 05/96→	Luc		2355402	[–] 23554 17.2	⊕ rear disc brake 08/95→
			Luc		82062800			Luc	epad	2355481	[–] 23554 17.2	⊕ rear disc brake 08/95→
				PRO	92041703	ø 256 x 13 x 39.2		Luc	epad	2355482	[–] 23554 15.2	⊕ rear disc brake →07/95
				PRO	92036803	ø 256 x 20 x 38.7	⊕ ABS 05/96→	Luc		82033000		
								Luc		82062800		
										91044700	ø 200 x 40	⊕ rear drum brake
								Ate		97006500		⊕ rear drum brake
										83044701	bore ø 19 ø 200 x 40	⊕ rear drum brake
										84044703	bore ø 19 ø 200 x 40	⊕ rear drum brake
									PRO	92154203	ø 226 x 10 x 71.5	⊕ rear disc brake
									PRO	92041803	ø 226 x 10 x 71.5	⊕ rear disc brake
										94006700	ø 200,0 x 49.8	⊕ brake power regul.
1.9 TDI	04/96→04/99	755300 81 / 110	Luc		2016801	[–] 20168 16.2	→04/96	Luc		2355402	[–] 23554 17.2	⊕ rear disc brake
			Luc		2194502	[–] 21945 16.2	05/96→	Luc	epad	2355481	[–] 23554 17.2	⊕ rear disc brake
			Luc		82062800			Luc		82033000		
				PRO	92036803	ø 256 x 20 x 38.7		Luc		82062800		
										91044700	ø 200 x 40	⊕ rear drum brake
								Ate		97006500		⊕ rear drum brake
										83044701	bore ø 19 ø 200 x 40	⊕ rear drum brake
										84044703	bore ø 19 ø 200 x 40	⊕ rear drum brake
										92057200	ø 226 x 10 x 71.2	⊕ rear disc brake ⊕ GT ⊕ D ⊕ rim 5 hole
									PRO	92154203	ø 226 x 10 x 71.5	⊕ rear disc brake ⊖ GT
									PRO	92041803	ø 226 x 10 x 71.5	⊕ rear disc brake ⊖ GT
										94006700	ø 200,0 x 49.8	⊕ rear drum brake
1.9 TDI Syncro	07/95→04/99	755400 66 / 90	Luc		2016804	[–] 20168 19.6		Luc		2355402	[–] 23554 17.2	⊕ rear disc brake
			Luc		82062800			Luc	epad	2355481	[–] 23554 17.2	⊕ rear disc brake
				PRO	92041703	ø 256 x 13 x 39.2		Luc		82033000		
								Luc		82062800		
								Ate		91044400	ø 230 x 40	⊕ rear drum brake
								Ate		97006600		
									ABS	92153800	ø 226 x 10 x 71.2	⊕ rear disc brake ⊕ rim 5 hole

T - Z

		kW / hp											
GOLF III Variant (1H5) 07/93→04/99													
1.9 TDI Syncro	07/95→04/99	755400 66 / 90								92057200	ø 226 x 10 x 71.2	⊕ rear disc brake ⊕ rim 5 hole
										94012000	ø 230,0 x 48.5	⊕ rear drum brake
2.0	07/93→04/99	755500 85 / 115	Luc	2016801	[–] 20168 16.2	→04/96	Luc	2355401	[–] 23554 15.2	⊕ rear disc brake →07/95 ⊖ GT
			Luc	2194502	[–] 21945 16.2	05/96→	Luc	2355402	[–] 23554 17.2	⊕ rear disc brake →07/95 ⊕ GT ⊕ D
			Luc	82062800			Luc	2355481	[–] 23554 17.2	08/95→ ⊕ rear disc brake →07/95 ⊕ GT ⊕ D
				PRO 92036803	ø 256 x 20 x 38.7					08/95→
							Luc	2355482	[–] 23554 15.2	⊕ rear disc brake →07/95 ⊖ GT
							Luc	82033000		
							Luc	82062800		→07/95
								91044700	ø 200 x 40	⊕ rear drum brake
							Ate	97006500		⊕ rear drum brake
								83044701	bore ø 19 ø 200 x 40	⊕ rear drum brake
								84044703	bore ø 19 ø 200 x 40	⊕ rear drum brake
								ABS 92153800	ø 226 x 10 x 71.2	⊕ rear disc brake ⊕ GT ⊕ D ⊕ rim 5 hole
								92057200	ø 226 x 10 x 71.2	⊕ rear disc brake ⊕ GT ⊕ D ⊕ rim 5 hole
								PRO 92154203	ø 226 x 10 x 71.5	⊕ rear disc brake ⊖ GT
								PRO 92041803	ø 226 x 10 x 71.5	⊕ rear disc brake ⊖ GT
								94006700	ø 200,0 x 49.8	⊕ rear drum brake
2.0 Syncro	08/95→04/99	755600 85 / 115	Luc	2016801	[–] 20168 16.2	⊕ rim 4 hole →04/96	Luc	2355402	[–] 23554 17.2	⊕ rear disc brake
			Luc	2016804	[–] 20168 19.6	⊕ rim 5 hole	Luc	2355481	[–] 23554 17.2	⊕ rear disc brake
			Luc	2194502	[–] 21945 16.2	⊕ rim 4 hole 05/96→	Luc	82033000		
			Luc	82062800			Luc	82062800		
				92057100	ø 280 x 22 x 28.2	⊕ rear disc brake ⊕ rim 5 hole	Ate	91044400	ø 230 x 40	⊕ rear drum brake
				PRO 92036803	ø 256 x 20 x 38.7	⊕ rim 4 hole	Ate	97006600		
								83044701	bore ø 19 ø 200 x 40	⊕ rear drum brake
								84044703	bore ø 19 ø 200 x 40	⊕ rear drum brake
								92057200	ø 226 x 10 x 71.2	⊕ rear disc brake ⊕ rim 5 hole
								PRO 92154203	ø 226 x 10 x 71.5	⊕ rear disc brake ⊕ rim 4 hole
								PRO 92041803	ø 226 x 10 x 71.5	⊕ rear disc brake ⊕ rim 4 hole
								94012000	ø 230,0 x 48.5	⊕ rear drum brake
2.9 VR6 Syncro	10/94→04/99	755700 140 / 190	Ate	2191102	[–] 21911 20.6	Teves	Luc	2355402	[–] 23554 17.2	
			Ate	82029300			Luc	2355481	[–] 23554 17.2	
			Ate	82062900			Luc	82033000		
				92072800	ø 288 x 25 x 28.2		Luc	82062800		
								92088700	ø 239 x 10 x 38.7	
								92057200	ø 226 x 10 x 71.2	⊕ rim 5 hole
GOLF IV (1J1) 08/97→04/08												
1.0	08/97→05/02	755800 51 / 69	Ate	2313001	[–] 23130 19.7	→1J-X-800000 →04/99	Luc	2355402	[–] 23554 17.2	
1.0	08/98→05/02	43 / 58								
1.0 Turbo	08/97→05/02	82 / 111	Ate	2313081	[–] 23130 19.7	→1J-X-800000 →04/99	Luc	2355481	[–] 23554 17.2	
1.4 16V	08/97→06/05	55 / 75	Ate	2313101	[+] 23131 19.7	1J-Y-000001→ 05/99→	Luc	82037300		
			Ate	2313181	[+] 23131 19.7	1J-Y-000001→ 05/99→	Luc	82063300		

T - Z

GOLF IV (1J1) 08/97→04/08

		kW / hp											
		755800	Ate		82062900			Pro		92082503	ø 232 x 9 x 39.3	
1.0	08/97→05/02	51 / 69		Pro	92082203	ø 256 x 22 x 36.5				TPM0008		
1.0	08/98→05/02	43 / 58			TPM0008							
1.0 Turbo	08/97→05/02	82 / 111										
1.4 16V	08/97→06/05	55 / 75										
		755900	Ate		2313001	[–] 23130 19.7	→1J-X-800000 →04/99	Luc		2355402	[–] 23554 17.2	
1.6	08/97→05/04	74 / 100	Ate	epad	2313081	[–] 23130 19.7	→1J-X-800000 →04/99	Luc	epad	2355481	[–] 23554 17.2	
			Ate		2313101	[+] 23131 19.7	1J-Y-000001→ 05/99→	Luc		82037300		
			Ate	epad	2313181	[+] 23131 19.7	1J-Y-000001→ 05/99→	Luc		82063300		
			Ate		82062900				Pro	92082503	ø 232 x 9 x 39.3	
				Pro	92082203	ø 256 x 22 x 36.5	PR 1LQ,1ZF			TPM0008		
				Pro	92082303	ø 280 x 22 x 36.5	PR 1LR,1LS,1ZP,1ZM					
					TPM0008							
		756000	Ate		2313101	[+] 23131 19.7		Luc		2355402	[–] 23554 17.2	
1.6	08/00→06/05	75 / 102	Ate	epad	2313181	[+] 23131 19.7		Luc	epad	2355481	[–] 23554 17.2	
1.6 16V	02/00→06/05	77 / 105	Ate		82062900			Luc		82037300		
				Pro	92082203	ø 256 x 22 x 36.5		Luc		82063300		
					TPM0008				Pro	92082503	ø 232 x 9 x 39.3	
										TPM0008		
		756100	Ate		2313101	[+] 23131 19.7		Luc		2355402	[–] 23554 17.2	
1.6	02/01→06/01	74 / 101										
1.6	08/03→06/05	78 / 107	Ate	epad	2313181	[+] 23131 19.7		Luc	epad	2355481	[–] 23554 17.2	
1.6 FSI	01/02→06/05	81 / 110	Ate		82062900			Luc		82037300		
				Pro	92082203	ø 256 x 22 x 36.5	PR 1LQ,1ZF	Luc		82063300		
				Pro	92082303	ø 280 x 22 x 36.5	PR 1LR,1LS,1ZP,1ZM		Pro	92082503	ø 232 x 9 x 39.3	
					TPM0008					TPM0008		
		756200			TPM0008					TPM0008		
1.6 Total Flex	02/01→04/08	74 / 101										
1.8	10/97→09/99	66 / 90										
1.9 TD	10/97→09/99	55 / 75										
		756300	Ate		2313001	[–] 23130 19.7	→1J-X-800000 →04/99	Luc		2355402	[–] 23554 17.2	
1.8	08/97→06/05	92 / 125	Ate	epad	2313081	[–] 23130 19.7	→1J-X-800000 →04/99	Luc	epad	2355481	[–] 23554 17.2	
1.9 TDI	08/97→05/04	81 / 110										
1.9 TDI	10/97→05/04	66 / 90	Ate		2313101	[+] 23131 19.7	1J-Y-000001→ 05/99→	Luc		82037300		
1.9 TDI	12/98→06/01	85 / 115	Ate	epad	2313181	[+] 23131 19.7	1J-Y-000001→ 05/99→	Luc		82063300		
			Ate		82062900				Pro	92082503	ø 232 x 9 x 39.3	
				Pro	92082303	ø 280 x 22 x 36.5				TPM0008		
					TPM0008							
		756400	Ate		2313001	[–] 23130 19.7	→1J-X-800000 →04/99	Luc		2355402	[–] 23554 17.2	
1.8 4motion	05/98→06/05	92 / 125	Ate	epad	2313081	[–] 23130 19.7	→1J-X-800000 →04/99	Luc	epad	2355481	[–] 23554 17.2	
1.9 TDI 4motion	07/98→04/02	66 / 90	Ate		2313101	[+] 23131 19.7	1J-Y-000001→ 05/99→	Luc		82037300		
			Ate	epad	2313181	[+] 23131 19.7	1J-Y-000001→ 05/99→	Luc		82063300		
			Ate		82062900				Pro	92105803	ø 239 x 9 x 33.5	
				Pro	92082303	ø 280 x 22 x 36.5				TPM0008		
					TPM0008							
		756500	Ate		2339201	[+] 23392 20.6		Luc		2355402	[–] 23554 17.2	
1.8 GTI	09/99→12/01	127 / 173										
1.8 T GTI	08/01→06/05	132 / 180										
2.3 V5	10/00→06/05	125 / 170										

T - Z

GOLF IV (1J1) 08/97→04/08

		756500	Ate		82029300				Luc		2355481	[–] 23554 17.2	
1.8 GTI	09/99→12/01	127 / 173											
1.8 T GTI	08/01→06/05	132 / 180	Ate		82062900				Luc		82037300		Ø 232 mm PR 1KK,KS,KV,KP,KT
2.3 V5	10/00→06/05	125 / 170		PRO	92098503	ø 312 x 25 x 34	PR 1ZQ,1LJ,E54		Luc		82502100		Ø 256 mm PR 1KU,2EE,1KY,E54
				PRO	92106603	ø 288 x 25 x 34.4	PR 1LN,1ZH,1LE,1ZE PR 1ZD		Luc		82063300		
					TPM0008					PRO	92082503	ø 232 x 9 x 39.3	PR 1KK,KS,KV,KP,KT
										PRO	92098603	ø 256 x 22 x 36.7	PR 1KU,2EE,1KY,E54
											TPM0008		
		756600	Ate		2191102	[–] 21911 20.6	→1J-X-800000 →04/99		Luc		2355402	[–] 23554 17.2	
1.8 T	08/97→06/05	110 / 150	Ate		2339201	[+] 23392 20.6	1J-Y-000001→ 05/99→		Luc		2355481	[–] 23554 17.2	
			Ate		82029300				Luc		82037300		
			Ate		82062900				Luc		82063300		
				PRO	92106603	ø 288 x 25 x 34.4				PRO	92082503	ø 232 x 9 x 39.3	PR 1KK,KS(J) ,KV
					TPM0008						TPM0008		
		756700	Ate		2339201	[+] 23392 20.6	1J-Y-000001→		Luc		2355402	[–] 23554 17.2	
1.8 T	09/05→06/06	112 / 152	Ate		82029300				Luc		2355481	[–] 23554 17.2	
			Ate		82062900				Luc		82037300		
				PRO	92106603	ø 288 x 25 x 34.4			Luc		82063300		
					TPM0008					PRO	92082503	ø 232 x 9 x 39.3	PR 1KK,KS(J) ,KV
											TPM0008		
		756800	Ate		2313001	[–] 23130 19.7	→1J-X-800000		Luc		2355402	[–] 23554 17.2	
1.9 SDI	08/97→06/05	50 / 68	Ate	epad	2313081	[–] 23130 19.7	→1J-X-800000		Luc	epad	2355481	[–] 23554 17.2	
			Ate		2313101	[+] 23131 19.7	1J-Y-000001→ 05/99→		Luc		82037300		
			Ate	epad	2313181	[+] 23131 19.7	1J-Y-000001→ 05/99→		Luc		82063300		
			Ate		82062900					PRO	92082503	ø 232 x 9 x 39.3	
				PRO	92082203	ø 256 x 22 x 36.5					TPM0008		
					TPM0008								
		756900	Ate		2339201	[+] 23392 20.6			Luc		2355402	[–] 23554 17.2	
1.9 TDI	05/00→06/05	110 / 150	Ate		82029300				Luc	epad	2355481	[–] 23554 17.2	
			Ate		82062900				Luc		82037300		Ø 232 mm
				PRO	92106603	ø 288 x 25 x 34.4	PR 1ZE(J), 1ZD		Luc		82063300		
					TPM0008					PRO	92082503	ø 232 x 9 x 39.3	PR 1KK,1KS(J), 1KV
											TPM0008		
		757000	Ate		2313101	[+] 23131 19.7			Luc		2355402	[–] 23554 17.2	
1.9 TDI	09/00→06/05	74 / 101	Ate	epad	2313181	[+] 23131 19.7			Luc	epad	2355481	[–] 23554 17.2	
			Ate		82062900				Luc		82037300		
				PRO	92082303	ø 280 x 22 x 36.5			Luc		82063300		
					TPM0008					PRO	92082503	ø 232 x 9 x 39.3	
											TPM0008		
		757100	Ate		2339201	[+] 23392 20.6			Luc		2355402	[–] 23554 17.2	
1.9 TDI	11/00→06/05	96 / 130	Ate		82029300				Luc	epad	2355481	[–] 23554 17.2	

T - Z

GOLF IV (1J1) 08/97→04/08

		kW / hp											
1.9 TDI	11/00→06/05	757100 96 / 130	Ate		82062900			Luc		82037300		
				PRO	92106603	ø 288 x 25 x 34.4		Luc		82063300		
					TPM0008				PRO	92082503	ø 232 x 9 x 39.3	
										TPM0008		
1.9 TDI 4motion	09/99→06/01	757200 85 / 115	Ate		2313101	[+] 23131 19.7		Luc		2355402	[–] 23554 17.2	
1.9 TDI 4motion	09/00→06/05	74 / 101										
2.0 4motion	10/00→06/05	85 / 115	Ate	epad	2313181	[+] 23131 19.7		Luc	epad	2355481	[–] 23554 17.2	
			Ate		82062900			Luc		82037300		
				PRO	92082303	ø 280 x 22 x 36.5		Luc		82063300		
					TPM0008				PRO	92105803	ø 239 x 9 x 33.5	
										TPM0008		
1.9 TDI 4motion	02/00→06/05	757300 110 / 150	Ate		2339201	[+] 23392 20.6		Luc		2355402	[–] 23554 17.2	
			Ate		82029300			Luc	epad	2355481	[–] 23554 17.2	
			Ate		82062900			Luc		82037300		Ø 232 mm
				PRO	92106603	ø 288 x 25 x 34.4	PR 1ZE(J), 1ZD	Luc		82063300		
					TPM0008				PRO	92105803	ø 239 x 9 x 33.5	PR 1KK,1KS(J), 1KV
										TPM0008		
1.9 TDI 4motion	11/00→06/05	757400 96 / 130	Ate		2339201	[+] 23392 20.6		Luc		2355402	[–] 23554 17.2	
			Ate		82029300			Luc	epad	2355481	[–] 23554 17.2	
			Ate		82062900			Luc		82037300		
				PRO	92106603	ø 288 x 25 x 34.4		Luc		82063300		
					TPM0008				PRO	92105803	ø 239 x 9 x 33.5	
										TPM0008		
2.0	07/98→05/04	757500 85 / 115	Ate		2313001	[–] 23130 19.7	→1J-X-800000	Luc		2355402	[–] 23554 17.2	
			Ate	epad	2313081	[–] 23130 19.7	→1J-X-800000	Luc	epad	2355481	[–] 23554 17.2	
			Ate		2313101	[+] 23131 19.7	1J-Y-000001→ 05/99→	Luc		82037300		
			Ate	epad	2313181	[+] 23131 19.7	1J-Y-000001→ 05/99→	Luc		82063300		
			Ate		82062900				PRO	92082503	ø 232 x 9 x 39.3	
				PRO	92082303	ø 280 x 22 x 36.5				TPM0008		
					TPM0008							
2.3 V5	08/97→10/00	757600 110 / 150	Ate		2191102	[–] 21911 20.6	→1J-X-800000 →04/99	Luc		2355402	[–] 23554 17.2	
			Ate		2339201	[+] 23392 20.6	1J-Y-000001→ 05/99→	Luc	epad	2355481	[–] 23554 17.2	
			Ate		82029300			Luc		82037300		Ø 232 mm PR 1KK,KS,KV,KP,KT
			Ate		82062900			Luc		82502100		Ø 256 mm PR 1KU,2EE,1KY,E54
				PRO	92098503	ø 312 x 25 x 34	PR 1ZQ,1LJ,E54	Luc		82063300		
				PRO	92106603	ø 288 x 25 x 34.4	PR 1LN,1ZH,1LE,1ZE PR 1ZD		PRO	92082503	ø 232 x 9 x 39.3	PR 1KK,KS,KV,KP,KT
					TPM0008				PRO	92098603	ø 256 x 22 x 36.7	PR 1KU,2EE,1KY,E54
										TPM0008		
2.3 V5 4motion	12/98→10/00	757700 110 / 150	Ate		2191102	[–] 21911 20.6	→1J-X-800000 →04/99	Luc		2355402	[–] 23554 17.2	
			Ate		2339201	[+] 23392 20.6	1J-Y-000001→ 05/99→	Luc	epad	2355481	[–] 23554 17.2	
			Ate		82029300			Luc		82037300		Ø 239 mm PR 1KE,2EG

T - Z

		kW / hp									
GOLF IV (1J1) 08/97→04/08											
757700			Ate	82062900			Luc	82502100			Ø 256 mm PR 1KU,2EE,1KY,E54
2.3 V5 4motion	12/98→10/00	110 / 150	PRO	92098503	ø 312 x 25 x 34	PR 1ZQ,1LJ,E54	Luc	82063300			
			PRO	92106603	ø 288 x 25 x 34.4	PR 1LN,1ZH,1LE,1ZE PR 1ZD	PRO	92105803	ø 239 x 9 x 33.5	PR 1KE,2EG	
				TPM0008			PRO	92098603	ø 256 x 22 x 36.7	PR 1KU,2EE,1KY,E54	
								TPM0008			
757800			Ate	2339201	[+] 23392 20.6		Luc	2355402	[–] 23554 17.2		
2.3 V5 4motion	10/00→06/05	125 / 170	Ate	82029300			Luc	2355481	[–] 23554 17.2		
			Ate	82062900			Luc	82037300			Ø 239 mm PR 1KE,2EG
			PRO	92098503	ø 312 x 25 x 34	PR 1ZQ,1LJ,E54	Luc	82502100			Ø 256 mm PR 1KU,2EE,1KY,E54
			PRO	92106603	ø 288 x 25 x 34.4	PR 1LN,1ZH,1LE,1ZE PR 1ZD	Luc	82063300			
				TPM0008			PRO	92105803	ø 239 x 9 x 33.5	PR 1KE,2EG	
							PRO	92098603	ø 256 x 22 x 36.7	PR 1KU,2EE,1KY,E54	
								TPM0008			
757900			Ate	2191102	[–] 21911 20.6	→1J-X-800000 →04/99	Luc	2355402	[–] 23554 17.2		
2.8	08/97→09/99	128 / 174									
2.8	08/97→12/00	128 / 174	Ate	2339201	[+] 23392 20.6	1J-Y-000001→ 05/99→	Luc	2355481	[–] 23554 17.2		
			Ate	82029300			Luc	82502100			
			Ate	82062900			Luc	82063300			
			PRO	92098503	ø 312 x 25 x 34	PR 1ZQ,1LJ,E54	PRO	92098603	ø 256 x 22 x 36.7		
			PRO	92106603	ø 288 x 25 x 34.4	PR 1LN,1ZH,1LE,1ZE PR 1ZD		TPM0008			
				TPM0008							
758000			Ate	2191102	[–] 21911 20.6	→1J-X-800000 →04/99	Luc	2355402	[–] 23554 17.2		
2.8 V6 4motion	03/99→06/05	150 / 204	Ate	2339201	[+] 23392 20.6	1J-Y-000001→ 05/99→	Luc	2355481	[–] 23554 17.2		
			Ate	82029300			Luc	82063300			
			Ate	82062900			PRO	92098603	ø 256 x 22 x 36.7		
			PRO	92098503	ø 312 x 25 x 34			TPM0008			
				TPM0008							
758100			Ate	2339201	[+] 23392 20.6		Luc	2355402	[–] 23554 17.2		
2.8 VR6	10/00→07/02	130 / 177	Ate	82029300			Luc	2355481	[–] 23554 17.2		
2.8 VR6	03/02→10/05	147 / 200	Ate	82062900			Luc	82502100			
			PRO	92098503	ø 312 x 25 x 34		Luc	82063300			
				TPM0008			PRO	92098603	ø 256 x 22 x 36.7		
								TPM0008			
758200			Ate	2148401	[o] 21484 20.8		Luc	2355402	[–] 23554 17.2		
3.2 R32 4motion	09/02→06/05	177 / 241		98029500	L270		Luc	2355481	[–] 23554 17.2		
			Ate	82059200			Luc	82502100			
			Ate	82062900			Luc	82063300			
				TPM0008			PRO	92098603	ø 256 x 22 x 36.7		
								TPM0008			
GOLF IV Cabriolet (1E7) 06/98→06/02											
758300			Luc	2016804	[–] 20168 19.6	→1E-T-030000	Luc	2355401	[–] 23554 15.2		→1E-X-016000
1.6	06/98→06/02	74 / 100									⊖ ABS 1E-X-016001→
1.9 TDI	06/98→06/02	66 / 90									
1.9 TDI	06/98→06/02	81 / 110									

T - Z

GOLF IV Cabriolet (1E7) 06/98→06/02

		758300	Luc		2194502	[–] 21945 16.2	PR 1ZK,1LY	Luc		2355402	[–] 23554 17.2	⊕ ABS 1E-X-016001→
1.6	06/98→06/02	74 / 100										
1.9 TDI	06/98→06/02	66 / 90	Luc		82062800			Luc		2355481	[–] 23554 17.2	⊕ ABS 1E-X-016001→
1.9 TDI	06/98→06/02	81 / 110		PRO	92036803	ø 256 x 20 x 38.7	1E-V-000001→ PR 1ZK,1LY	Luc		2355482	[–] 23554 15.2	→1E-X-016000 ⊖ ABS 1E-X-016001→
								Luc		82033000		
								Luc		82062800		
									PRO	92154203	ø 226 x 10 x 71.5	
									PRO	92041803	ø 226 x 10 x 71.5	
		758400	Luc		2016801	[–] 20168 16.2	1E-V-000001→ PR 1LL	Luc		2355401	[–] 23554 15.2	→1E-X-016000 ⊖ ABS 1E-X-016001→
1.8	06/98→06/02	55 / 75	Luc		2016804	[–] 20168 19.6	→1E-T-030000	Luc		2355402	[–] 23554 17.2	⊕ ABS 1E-X-016001→
			Luc		2194502	[–] 21945 16.2	PR 1ZK,1LY	Luc		2355481	[–] 23554 17.2	⊕ ABS 1E-X-016001→
			Luc		82062800			Luc		2355482	[–] 23554 15.2	→1E-X-016000 ⊖ ABS 1E-X-016001→
				PRO	92041703	ø 256 x 13 x 39.2	→1E-T-030000 PR 1LL	Luc		82033000		
				PRO	92036803	ø 256 x 20 x 38.7	1E-V-000001→ PR 1ZK,1LY	Luc		82062800		
									PRO	92154203	ø 226 x 10 x 71.5	
									PRO	92041803	ø 226 x 10 x 71.5	
		758500	Luc		2016804	[–] 20168 19.6	→1E-T-030000	Luc		2355401	[–] 23554 15.2	→1E-X-016000 ⊖ ABS 1E-X-016001→
1.8	06/98→06/02	66 / 90										
2.0	06/98→06/02	85 / 115	Luc		2194502	[–] 21945 16.2	1E-V-000001→	Luc		2355402	[–] 23554 17.2	⊕ ABS 1E-X-016001→
2.0	06/98→06/02	86 / 117	Luc		82062800			Luc		2355481	[–] 23554 17.2	⊕ ABS 1E-X-016001→
				PRO	92041703	ø 256 x 13 x 39.2	→1E-T-030000	Luc		2355482	[–] 23554 15.2	→1E-X-016000 ⊖ ABS 1E-X-016001→
				PRO	92036803	ø 256 x 20 x 38.7	1E-V-000001→	Luc		82033000		
								Luc		82062800		
									PRO	92154203	ø 226 x 10 x 71.5	
									PRO	92041803	ø 226 x 10 x 71.5	

GOLF IV Variant (1J5) 05/99→06/06

		758600	Ate		2313101	[+] 23131 19.7		Luc		2355402	[–] 23554 17.2	
1.4 16V	05/99→06/06	55 / 75										
1.6	05/99→04/02	74 / 101	Ate		2313181	[+] 23131 19.7		Luc		2355481	[–] 23554 17.2	
1.6	08/00→06/06	75 / 102		epad					epad			
1.6 16V	02/00→06/06	77 / 105	Ate		82062900			Luc		82037300		
1.6 FSi	10/03→07/04	85 / 116										
1.6 FSI	01/02→06/06	81 / 110		PRO	92082203	ø 256 x 22 x 36.5	PR 1LQ,1ZF	Luc		82063300		
1.9 SDI	05/99→06/06	50 / 68		PRO	92082303	ø 280 x 22 x 36.5	PR 1LR,1LS,1ZP,1ZM		PRO	92082503	ø 232 x 9 x 39.3	
					TPM0008					TPM0008		
		758700	Ate		2313101	[+] 23131 19.7		Luc		2355402	[–] 23554 17.2	
1.8 4motion	05/99→06/06	92 / 125										
1.9 TDI 4motion	05/99→06/01	85 / 115	Ate		2313181	[+] 23131 19.7		Luc		2355481	[–] 23554 17.2	
1.9 TDI 4motion	05/99→04/02	66 / 90		epad					epad			
1.9 TDI 4motion	09/00→06/06	74 / 101	Ate		82062900			Luc		82037300		
2.0 4motion	12/99→06/06	88 / 120										
2.0 4motion	10/00→06/06	85 / 115		PRO	92082303	ø 280 x 22 x 36.5		Luc		82063300		
					TPM0008				PRO	92105803	ø 239 x 9 x 33.5	
										TPM0008		
		758800	Ate		2339201	[+] 23392 20.6		Luc		2355402	[–] 23554 17.2	
1.8 T	09/99→12/01	127 / 173										
1.8 T	05/00→06/06	110 / 150	Ate		82029300			Luc		2355481	[–] 23554 17.2	
1.8 T	09/02→12/03	112 / 152		epad					epad			
1.9 TDI	11/00→06/06	96 / 130	Ate		82062900			Luc		82037300		Ø 232 mm PR 1KP,1KT,1KX
2.3 V5	05/99→06/06	110 / 150										
2.3 V5	10/00→06/06	125 / 170		PRO	92098503	ø 312 x 25 x 34	PR 1ZR,1LJ,E54	Luc		82502100		Ø 256 mm PR 2EL PR 1KU,2EE,1KY,E54
2.8 V6	09/00→12/04	128 / 174										

		kW / hp											
GOLF IV Variant (1J5) 05/99→06/06													
		758800		PRO	92106603	ø 288 x 25 x 34.4	PR 1LN,1ZH,1LE,1ZE PR 1ZD	Luc		82063300		
1.8 T	09/99→12/01	127 / 173			TPM0008				PRO	92082503	ø 232 x 9 x 39.3	PR 1KP,1KT,1KX
1.8 T	05/00→06/06	110 / 150							PRO	92098603	ø 256 x 22 x 36.7	PR 2EL PR 1KU,2EE,1KY,E54
1.8 T	09/02→12/03	112 / 152								TPM0008		
1.9 TDI	11/00→06/06	96 / 130										
2.3 V5	05/99→06/06	110 / 150										
2.3 V5	10/00→06/06	125 / 170										
2.8 V6	09/00→12/04	128 / 174										
		758900	Ate		2313101	[+] 23131 19.7		Luc		2355402	[–] 23554 17.2	
1.9 TDI	05/99→06/01	81 / 110										
1.9 TDI	05/99→05/06	66 / 90	Ate	epad	2313181	[+] 23131 19.7		Luc	epad	2355481	[–] 23554 17.2	
1.9 TDI	08/99→06/01	85 / 115										
1.9 TDI	09/00→06/06	74 / 101										
2.0	05/99→06/06	85 / 115	Ate		82062900			Luc		82037300		
2.0 Bi-Fuel	02/02→06/06	85 / 116		PRO	92082303	ø 280 x 22 x 36.5		Luc		82063300		
					TPM0008				PRO	92082503	ø 232 x 9 x 39.3	
										TPM0008		
		759000	Ate		2339201	[+] 23392 20.6		Luc		2355402	[–] 23554 17.2	
1.9 TDI	06/01→06/06	110 / 150	Ate		82029300			Luc	epad	2355481	[–] 23554 17.2	
			Ate		82062900			Luc		82502100		Ø 256 mm PR 2EL PR 1KU,2EE,1KY,E54
				PRO	92098503	ø 312 x 25 x 34	PR 1ZR,1LJ,E54	Luc		82063300		
				PRO	92106603	ø 288 x 25 x 34.4	PR 1LN,1ZH,1LE,1ZE PR 1ZD		PRO	92082503	ø 232 x 9 x 39.3	PR 1KP,1KT,1KX
					TPM0008				PRO	92098603	ø 256 x 22 x 36.7	PR 2EL PR 1KU,2EE,1KY,E54
										TPM0008		
		759100	Ate		2339201	[+] 23392 20.6		Luc		2355402	[–] 23554 17.2	
1.9 TDI 4motion	11/00→06/06	96 / 130										
2.3 V5 4motion	05/99→06/06	110 / 150	Ate		82029300			Luc	epad	2355481	[–] 23554 17.2	
2.3 V5 4motion	10/00→06/06	125 / 170										
2.8 V6 4motion	05/99→06/06	150 / 204	Ate		82062900			Luc		82037300		Ø 239 mm PR 1KE,2EG
				PRO	92098503	ø 312 x 25 x 34	PR 1ZR,1LJ,E54	Luc		82502100		Ø 256 mm PR 2EL PR 1KU,2EE,1KY,E54
				PRO	92106603	ø 288 x 25 x 34.4	PR 1LN,1ZH,1LE,1ZE PR 1ZD	Luc		82063300		
					TPM0008				PRO	92105803	ø 239 x 9 x 33.5	PR 1KE,2EG
									PRO	92098603	ø 256 x 22 x 36.7	PR 2EL PR 1KU,2EE,1KY,E54
										TPM0008		
GOLF V (1K1) 10/03→02/09													
		759200	Ate		2313101	[+] 23131 19.7		Luc		2355402	[–] 23554 17.2	
1.0	08/05→11/08	48 / 65										
1.0	10/05→11/08	53 / 72	Ate	epad	2313181	[+] 23131 19.7		Luc	epad	2355481	[–] 23554 17.2	
1.4 16V	10/03→05/06	55 / 75										
1.4 16V	05/06→11/08	59 / 80	Ate		82062900			Luc		82037300		
1.4 FSI	10/03→07/06	66 / 90										
1.6	01/04→11/08	75 / 102		PRO	92120703	ø 280 x 22 x 49.9			PRO	92120903	ø 255 x 10 x 51.6	
1.9 TDI	05/04→11/08	66 / 90		PRO	92120705	ø 280 x 22 x 49.9				TPM0008		
2.0 SDI	01/04→11/08	55 / 75			TPM0008							
		759300	Ate		2358701	[+] 23587 20.3		Luc		2355402	[–] 23554 17.2	
1.4 TSI	11/05→11/08	125 / 170										
2.0 TDI	11/05→11/08	125 / 170	Ate	epad	2358781	[+] 23587 20.3		Luc	epad	2355481	[–] 23554 17.2	
			Ate		82076800			Luc		82037300		
				PRO	92120503	ø 312 x 25 x 49.7			PRO	92120903	ø 255 x 10 x 51.6	
					TPM0008					TPM0008		
		759400	Ate		2358701	[+] 23587 20.3		Luc		2355402	[–] 23554 17.2	
1.4 TSI	05/06→11/08	103 / 140										
1.4 TSI	05/07→11/08	90 / 122	Ate	epad	2358781	[+] 23587 20.3		Luc	epad	2355481	[–] 23554 17.2	
2.0 TDI	10/03→11/08	100 / 136										
			Ate		82076800			Luc		82037300		

T - Z

→

GOLF V (1K1) 10/03→02/09

		kW / hp												
		759400		PRO	92120803	ø 288 x 25 x 49.8			PRO	92120903	ø 255 x 10 x 51.6		
1.4 TSI	05/06→11/08	103 / 140		PRO	92120805	ø 288 x 25 x 49.8				TPM0008			
1.4 TSI	05/07→11/08	90 / 122			TPM0008								
2.0 TDI	10/03→11/08	100 / 136											
		759500	Ate		2313101	[+] 23131 19.7	Ø 280 mm		Luc	2355402	[–] 23554 17.2		
1.6 FSI	10/03→07/08	85 / 115											
1.6 FSI	02/06→11/08	74 / 101	Ate	epad	2313181	[+] 23131 19.7	Ø 280 mm		Luc	epad 2355481	[–] 23554 17.2		
2.0 FSI	01/04→11/08	110 / 150	Ate		2358701	[+] 23587 20.3	Ø 288 mm		Luc	82037300			
			Ate	epad	2358781	[+] 23587 20.3	Ø 288 mm			PRO 92120903	ø 255 x 10 x 51.6		
			Ate		82062900		Ø 280 mm			TPM0008			
			Ate		82076800		Ø 288 mm						
				PRO	92120703	ø 280 x 22 x 49.9							
				PRO	92120705	ø 280 x 22 x 49.9							
				PRO	92120803	ø 288 x 25 x 49.8							
				PRO	92120805	ø 288 x 25 x 49.8							
					TPM0008								
		759600	Ate		2313101	[+] 23131 19.7			Luc	2355402	[–] 23554 17.2		
1.6 MultiFuel	10/07→11/08	75 / 102	Ate	epad	2313181	[+] 23131 19.7			Luc	epad 2355481	[–] 23554 17.2		
			Ate		82062900				Luc	82037300			
				PRO	92120703	ø 280 x 22 x 49.9			Luc	82063300			
				PRO	92120705	ø 280 x 22 x 49.9				PRO 92120903	ø 255 x 10 x 51.6		
					TPM0008					TPM0008			
		759700	Ate		2358701	[+] 23587 20.3			Luc	2355402	[–] 23554 17.2	Ø 255 mm PR 1KD	
1.8 GTI	08/06→11/08	132 / 179	Ate	epad	2358781	[+] 23587 20.3			Luc	epad 2355481	[–] 23554 17.2	Ø 255 mm PR 1KD	
			Ate		82062900				Luc	2391401	[o] 23914 17.2	Ø 286 mm PR 1KZ ⊕ J Ø 256 mm PR 1KE	
			Ate		82076800				Luc	epad 2391481	[o] 23914 17.2	Ø 286 mm PR 1KZ ⊕ J Ø 256 mm PR 1KE	
				PRO	92120503	ø 312 x 25 x 49.7			Luc	82037300		Ø 255 mm PR 1KD	
					TPM0008				Luc	82509000		Ø 286 mm PR 1KZ ⊕ J Ø 256 mm PR 1KE	
										PRO 92120903	ø 255 x 10 x 51.6	PR 1KD	
										PRO 92121103	ø 256 x 12 x 48.4	⊕ J PR 1KE	
										PRO 92140803	ø 282 x 12 x 48.5	PR 1KZ	
										TPM0008			
		759800	Ate		2358701	[+] 23587 20.3			Luc	2355402	[–] 23554 17.2	Ø 255 mm PR 1KD	
1.8 Turbo	11/03→11/08	110 / 150											
2.0 TDI	12/04→11/08	103 / 140	Ate	epad	2358781	[+] 23587 20.3			Luc	epad 2355481	[–] 23554 17.2	Ø 255 mm PR 1KD	
2.0 TDI 16V	10/03→11/08	103 / 140	Ate		82076800				Luc	2391401	[o] 23914 17.2	Ø 286 mm PR 1KZ ⊕ J Ø 256 mm PR 1KE	
2.5 FSI	06/05→11/08	110 / 150		PRO	92120803	ø 288 x 25 x 49.8			Luc	epad 2391481	[o] 23914 17.2	Ø 286 mm PR 1KZ ⊕ J Ø 256 mm PR 1KE	
2.5 FSI	01/06→12/08	112 / 152		PRO	92120805	ø 288 x 25 x 49.8			Luc	82037300		Ø 255 mm PR 1KD	
					TPM0008				Luc	82509000		Ø 286 mm PR 1KZ ⊕ J Ø 256 mm PR 1KE	
										PRO 92120903	ø 255 x 10 x 51.6	PR 1KD	
										PRO 92121103	ø 256 x 12 x 48.4	⊕ J PR 1KE	
										PRO 92140803	ø 282 x 12 x 48.5	PR 1KZ	
										TPM0008			

		kW / hp												
GOLF V (1K1) 10/03→02/09														
		759900	Ate		**2313101**	[+] 23131	19.7	Ø 280 mm PR 1ZF,1ZM	Luc		**2355402**	[–] 23554	17.2	Ø 255 mm PR 1KD
1.9 TDI	10/03→11/08	77 / 105												
1.9 TDI 4motion	08/04→11/08	77 / 105	Ate	epad	**2313181**	[+] 23131	19.7	Ø 280 mm PR 1ZF,1ZM	Luc	epad	**2355481**	[–] 23554	17.2	Ø 255 mm PR 1KD
2.0	08/06→11/08	85 / 116												
2.0 FSI 4motion	08/04→11/08	110 / 150	Ate		**2358701**	[+] 23587	20.3	Ø 288 mm PR 1ZE,1ZP	Luc		**2391401**	[o] 23914	17.2	Ø 286 mm PR 1KZ
			Ate	epad	**2358781**	[+] 23587	20.3	Ø 288 mm PR 1ZE,1ZP	Luc	epad	**2391481**	[o] 23914	17.2	Ø 286 mm PR 1KZ
			Ate		**82062900**			Ø 280 mm PR 1ZF,1ZM	Luc		**82037300**			Ø 255 mm PR 1KD
			Ate		**82076800**			Ø 288 mm PR 1ZE,1ZP	Luc		**82509000**			Ø 286 mm PR 1KZ
				PRO	**92120703**	ø 280 x 22 x 49.9		PR 1ZF,1ZM		PRO	**92120903**	ø 255 x 10 x 51.6		PR 1KD
				PRO	**92120705**	ø 280 x 22 x 49.9		PR 1ZF,1ZM		PRO	**92140803**	ø 282 x 12 x 48.5		PR 1KZ
				PRO	**92120803**	ø 288 x 25 x 49.8		PR 1ZE,1ZP			**TPM0008**			
				PRO	**92120805**	ø 288 x 25 x 49.8		PR 1ZE,1ZP						
					TPM0008									
		760000	Ate		**2358701**	[+] 23587	20.3		Luc		**2391401**	[o] 23914	17.2	
2.0 GTI	10/04→02/09	147 / 200												
2.0 GTI	09/06→12/08	169 / 230	Ate	epad	**2358781**	[+] 23587	20.3		Luc	epad	**2391481**	[o] 23914	17.2	
			Ate		**82076800**				Luc		**82509000**			
				PRO	**92120503**	ø 312 x 25 x 49.7				PRO	**92140803**	ø 282 x 12 x 48.5		
					TPM0008						**TPM0008**			
		760100	Ate		**2313101**	[+] 23131	19.7	Ø 280 mm PR 1ZF,1ZM	Luc		**2355402**	[–] 23554	17.2	Ø 255 mm PR 1KD
2.0 TDI 16V 4motion	08/04→11/08	103 / 140												
2.0 TDI 4motion	08/04→11/08	103 / 140	Ate	epad	**2313181**	[+] 23131	19.7	Ø 280 mm PR 1ZF,1ZM	Luc	epad	**2355481**	[–] 23554	17.2	Ø 255 mm PR 1KD
			Ate		**2358701**	[+] 23587	20.3	Ø 288 mm PR 1ZE,1ZP	Luc		**2391401**	[o] 23914	17.2	Ø 286 mm PR 1KZ
			Ate	epad	**2358781**	[+] 23587	20.3	Ø 288 mm PR 1ZE,1ZP	Luc	epad	**2391481**	[o] 23914	17.2	Ø 286 mm PR 1KZ
			Ate		**82062900**			Ø 280 mm PR 1ZF,1ZM	Luc		**82037300**			Ø 255 mm PR 1KD
			Ate		**82076800**			Ø 288 mm PR 1ZE,1ZP	Luc		**82509000**			Ø 286 mm PR 1KZ
				PRO	**92120703**	ø 280 x 22 x 49.9		PR 1ZF,1ZM		PRO	**92120903**	ø 255 x 10 x 51.6		PR 1KD, 1KΩ
				PRO	**92120705**	ø 280 x 22 x 49.9		PR 1ZF,1ZM		PRO	**92121103**	ø 256 x 12 x 48.4		PR 1KE, 1KF
				PRO	**92120803**	ø 288 x 25 x 49.8		PR 1ZE,1ZP		PRO	**92140803**	ø 282 x 12 x 48.5		PR 1KZ, 1KY
				PRO	**92120805**	ø 288 x 25 x 49.8		PR 1ZE,1ZP			**TPM0008**			
					TPM0008									
		760200	Ate		**2380101**	[+] 23801	20.3		Luc		**2391402**	[o] 23914	17.2	
3.2	09/05→11/08	184 / 250												
3.2 R32 4motion	01/04→11/08	177 / 241	Ate	epad	**2380181**	[+] 23801	20.3		Luc	epad	**2391482**	[o] 23914	17.2	
3.2 R32 4motion	11/05→11/08	184 / 250												
			Ate		**82071800**				Luc		**82502000**			
				PRO	**92120603**	ø 345 x 30 x 49.9			Luc		**82063300**			
					TPM0008					PRO	**92140703**	ø 310 x 22 x 48.5		
											TPM0008			
GOLF V Variant (1K5) 06/07→07/09														
		760300	Ate		**2313101**	[+] 23131	19.7		Luc		**2355402**	[–] 23554	17.2	
1.4	06/07→07/09	59 / 80												
			Ate	epad	**2313181**	[+] 23131	19.7		Luc	epad	**2355481**	[–] 23554	17.2	
			Ate		**82062900**				Luc		**82037300**			
				PRO	**92120703**	ø 280 x 22 x 49.9				PRO	**92120903**	ø 255 x 10 x 51.6		
				PRO	**92120705**	ø 280 x 22 x 49.9					**TPM0008**			
					TPM0008									

T - Z

30 kW / hp

GOLF V Variant (1K5) 06/07→07/09

		760400	Ate		2358701	[+] 23587 20.3		Luc		2391401	[o] 23914 17.2	
1.4 TSI	06/07→07/09	90 / 122										
1.4 TSI	06/07→07/09	103 / 140	Ate	epad	2358781	[+] 23587 20.3		Luc	epad	2391481	[o] 23914 17.2	
2.0 TDI	06/07→07/09	100 / 136										
2.0 TDI	06/07→07/09	103 / 140										
2.0 TDI 4motion	06/07→07/09	100 / 136	Ate		82076800			Luc		82509000		
				PRO	92120803	ø 288 x 25 x 49.8			PRO	92121103	ø 256 x 12 x 48.4	
				PRO	92120805	ø 288 x 25 x 49.8				TPM0008		
					TPM0008							
		760500	Ate		2358701	[+] 23587 20.3		Luc		2391401	[o] 23914 17.2	
1.4 TSI	06/07→07/09	125 / 170										
1.4 TSI	07/08→07/09	118 / 160	Ate	epad	2358781	[+] 23587 20.3		Luc	epad	2391481	[o] 23914 17.2	
2.0	06/07→07/09	147 / 200										
			Ate		82076800			Luc		82509000		
				PRO	92120503	ø 312 x 25 x 49.7			PRO	92121103	ø 256 x 12 x 48.4	
					TPM0008					TPM0008		
		760600	Ate		2313101	[+] 23131 19.7		Luc		2391401	[o] 23914 17.2	
1.6	06/07→07/09	75 / 102										
1.6 MultiFuel	11/07→07/09	75 / 102	Ate	epad	2313181	[+] 23131 19.7		Luc	epad	2391481	[o] 23914 17.2	
1.9 TDI	06/07→07/09	77 / 105										
			Ate		82062900			Luc		82509000		
				PRO	92120703	ø 280 x 22 x 49.9			PRO	92121103	ø 256 x 12 x 48.4	
				PRO	92120705	ø 280 x 22 x 49.9				TPM0008		
					TPM0008							
		760700	Ate		2313101	[+] 23131 19.7	Ø 280 mm PR 1ZF,1ZM	Luc		2355402	[–] 23554 17.2	Ø 255 mm PR 1KD
1.9 TDI 4motion	01/08→07/09	77 / 105										
2.5	01/08→07/09	125 / 170	Ate	epad	2313181	[+] 23131 19.7	Ø 280 mm PR 1ZF,1ZM	Luc	epad	2355481	[–] 23554 17.2	Ø 255 mm PR 1KD
			Ate		2358701	[+] 23587 20.3	Ø 288 mm PR 1ZE,1ZP	Luc		2391401	[o] 23914 17.2	Ø 256 mm PR 1KE
							Ø 312 mm PR 1LJ,1ZD					Ø 286 mm PR 1KZ
			Ate	epad	2358781	[+] 23587 20.3	Ø 288 mm PR 1ZE,1ZP	Luc	epad	2391481	[o] 23914 17.2	Ø 256 mm PR 1KE
							Ø 312 mm PR 1LJ,1ZD					Ø 286 mm PR 1KZ
			Ate		82062900		Ø 280 mm PR 1ZF,1ZM	Luc		82037300		Ø 255 mm PR 1KD
			Ate		82076800		Ø 288 mm PR 1ZE,1ZP	Luc		82509000		Ø 256 mm PR 1KE
							Ø 312 mm PR 1LJ,1ZD					Ø 286 mm PR 1KZ
				PRO	92120503	ø 312 x 25 x 49.7	PR 1LJ,1ZD	Luc		82063300		Ø 255 mm PR 1KD
				PRO	92120703	ø 280 x 22 x 49.9	PR 1ZF,1ZM		PRO	92120903	ø 255 x 10 x 51.6	PR 1KD
				PRO	92120705	ø 280 x 22 x 49.9	PR 1ZF,1ZM		PRO	92121103	ø 256 x 12 x 48.4	PR 1KE
				PRO	92120803	ø 288 x 25 x 49.8	PR 1ZE,1ZP		PRO	92140803	ø 282 x 12 x 48.5	PR 1KZ
				PRO	92120805	ø 288 x 25 x 49.8	PR 1ZE,1ZP			TPM0008		
					TPM0008							
		760800	Ate		2358701	[+] 23587 20.3		Luc		2391401	[o] 23914 17.2	
2.0 TDI 16V	06/07→07/09	103 / 140										
			Ate	epad	2358781	[+] 23587 20.3		Luc	epad	2391481	[o] 23914 17.2	
			Ate		82076800			Luc		82509000		
				PRO	92120503	ø 312 x 25 x 49.7	PR 1LJ,1ZD		PRO	92121103	ø 256 x 12 x 48.4	
				PRO	92120803	ø 288 x 25 x 49.8	PR 1ZE,1ZP			TPM0008		
				PRO	92120805	ø 288 x 25 x 49.8	PR 1ZE,1ZP					
					TPM0008							

GOLF VI (5K1) 10/08→11/13

		760900	Ate		2313001	[–] 23130 19.7		Luc		2355402	[–] 23554 17.2	
1.2 TSI	05/09→11/12	77 / 105										
1.2 TSI	05/10→11/12	63 / 86	Ate	epad	2313081	[–] 23130 19.7		Luc	epad	2355481	[–] 23554 17.2	
1.4	10/08→11/12	59 / 80										
1.6	10/08→11/12	75 / 102										
1.6 BiFuel	03/09→11/12	75 / 102	Ate		2313101	[+] 23131 19.7		Luc		82037300		
1.6 MultiFuel	10/08→11/12	75 / 102										
1.6 TDI	02/09→11/12	66 / 90										
1.6 TDI	02/09→11/12	77 / 105										

T - Z

		kW / hp													
GOLF VI (5K1) 10/08→11/13															
2.0 TDI	10/08→11/12	81 / 110	Ate	epad	2313181	[+] 23131 19.7			PRO	92120903	ø 255 x 10 x 51.6	
Blue E-Motion	12/10→	65 / 88	Ate		82062900					TPM0008		
				PRO	92120703	ø 280 x 22 x 49.9						
				PRO	92120705	ø 280 x 22 x 49.9						
					TPM0008							
		761000	Ate		2358704	[–] 23587 20.3		Luc		2355402	[–] 23554 17.2	Ø 255 mm PR 1KD
1.4 TSI	10/08→11/12	90 / 122	Ate	epad	2358782	[–] 23587 20.3		Luc	epad	2355481	[–] 23554 17.2	Ø 255 mm PR 1KD
			Ate		2358701	[+] 23587 20.3		Luc		2391401	[o] 23914 17.2	⊕ J Ø 256 mm PR 1KE
			Ate	epad	2358781	[+] 23587 20.3		Luc	epad	2391481	[o] 23914 17.2	⊕ J Ø 256 mm PR 1KE
			Ate		82076800			Luc		82037300		Ø 255 mm PR 1KD
				PRO	92120803	ø 288 x 25 x 49.8		Luc		82509000		⊕ J Ø 256 mm PR 1KE
				PRO	92120805	ø 288 x 25 x 49.8			PRO	92120903	ø 255 x 10 x 51.6	PR 1KD
					TPM0008				PRO	92121103	ø 256 x 12 x 48.4	⊕ J PR 1KE
										TPM0008		
		761100	Ate		2358701	[+] 23587 20.3		Luc		2355402	[–] 23554 17.2	
1.4 TSI	10/08→11/12	118 / 160										
1.8 TSI	06/09→01/11	118 / 160										
2.0 TDI	04/09→11/12	125 / 170	Ate	epad	2358781	[+] 23587 20.3		Luc	epad	2355481	[–] 23554 17.2	
2.5 FSI	07/09→05/13	125 / 170										
			Ate		82076800			Luc		82037300		
				PRO	92120503	ø 312 x 25 x 49.7			PRO	92120903	ø 255 x 10 x 51.6	
					TPM0008					TPM0008		
		761200	Ate		2391301	[+] 23913 20.3		Luc		2391401	[o] 23914 17.2	
2.0 4motion	09/11→	191 / 260	Luc		82518200			Luc	epad	2391481	[o] 23914 17.2	
				PRO	92120603	ø 345 x 30 x 49.9		Luc		82502000		
					TPM0008				PRO	92140703	ø 310 x 22 x 48.5	
										TPM0008		
		761300	Ate		2358701	[+] 23587 20.3		Bos		2456301	[–] 24563 17.7	Ø 272 mm PR 1KS,1KT
2.0 GTi	04/09→11/12	155 / 210										
2.0 GTi	06/09→11/13	147 / 200										
2.0 GTi	05/11→11/12	173 / 235	Ate	epad	2358781	[+] 23587 20.3		Luc		2391401	[o] 23914 17.2	Ø 282 mm PR 1KZ,1KY
			Ate		82076800			Luc	epad	2391481	[o] 23914 17.2	Ø 282 mm PR 1KZ,1KY
				PRO	92120503	ø 312 x 25 x 49.7		Bos		82054300		Ø 272 mm PR 1KS,1KT
					TPM0008			Luc		82509000		Ø 282 mm PR 1KZ,1KY
									PRO	92140803	ø 282 x 12 x 48.5	PR 1KZ,1KY
									PRO	92224903	ø 272 x 10 x 48.3	PR 1KS,1KT
										TPM0008		
		761400	Ate		2380101	[+] 23801 20.3	⊕ blue cal.	Luc		2391402	[o] 23914 17.2	
2.0 R 4motion	11/09→05/11	195 / 265	Ate	epad	2380181	[+] 23801 20.3	⊕ blue cal.	Luc	epad	2391482	[o] 23914 17.2	
			Ate		2391301	[+] 23913 20.3		Luc		82502000		
			Ate		82071800				PRO	92140703	ø 310 x 22 x 48.5	
			Luc		82518200					TPM0008		
				PRO	92120603	ø 345 x 30 x 49.9						
					TPM0008							
		761500	Ate		2391301	[+] 23913 20.3		Luc		2391402	[o] 23914 17.2	
2.0 R 4motion	11/09→11/12	199 / 270										
2.0 R 4motion	11/09→11/13	188 / 256										

T - Z

		kW / hp											
GOLF VI (5K1) 10/08→11/13													
		761500	Luc		82518200			Luc		2391482	[o] 23914 17.2	
2.0 R 4motion	11/09→11/12	199 / 270		PRO	92120603	ø 345 x 30 x 49.9		Luc		82502000		
2.0 R 4motion	11/09→11/13	188 / 256			TPM0008				PRO	92140703	ø 310 x 22 x 48.5	
										TPM0008		
		761600	Ate		2358704	[–] 23587 20.3		Luc		2355402	[–] 23554 17.2	
2.0 TDI	10/08→11/12	100 / 136	Ate		2358782	[–] 23587 20.3		Luc	epad	2355481	[–] 23554 17.2	
2.0 TDI	10/08→05/13	103 / 140	Ate		2358701	[+] 23587 20.3		Luc		2391401	[o] 23914 17.2	⊕J
			Ate	epad	2358781	[+] 23587 20.3		Luc	epad	2391481	[o] 23914 17.2	⊕J
			Ate		82076800			Luc		82037300		
				PRO	92120803	ø 288 x 25 x 49.8		Luc		82509000		⊕J
				PRO	92120805	ø 288 x 25 x 49.8		Luc		82063300		
					TPM0008				PRO	92120903	ø 255 x 10 x 51.6	
									PRO	92121103	ø 256 x 12 x 48.4	⊕J
										TPM0008		
		761700	Ate		2358701	[+] 23587 20.3		Bos		2456301	[–] 24563 17.7	
2.0 TDI 4motion	05/09→11/12	103 / 140	Ate	epad	2358781	[+] 23587 20.3		Bos		82054300		
			Ate		82076800				PRO	92224903	ø 272 x 10 x 48.3	
				PRO	92120503	ø 312 x 25 x 49.7				TPM0008		
					TPM0008							
GOLF VI Cabriolet (517) 03/11→ → GOLF VI Convertible (517), Page 1225													
GOLF VI Convertible (517) 03/11→													
		761800	Ate		2358701	[+] 23587 20.3		Luc		2355402	[–] 23554 17.2	
1.2 TSI	03/11→11/13	77 / 105	Ate	epad	2358781	[+] 23587 20.3		Luc	epad	2355481	[–] 23554 17.2	
1.4 TSI	11/11→	90 / 122	Ate		82076800			Luc		82037300		
1.6 TDI	03/11→	77 / 105		PRO	92120803	ø 288 x 25 x 49.8			PRO	92120903	ø 255 x 10 x 51.6	
				PRO	92120805	ø 288 x 25 x 49.8				TPM0008		
					TPM0008							
		761900	TRW		2568301	[+] 25683 20.3		Ate		2500801	[–] 25008 16.4	
1.2 TSI 16V	11/13→	77 / 105			98050800	L170		Ate		82503500		
				PRO	92120803	ø 288 x 25 x 49.8			PRO	92224903	ø 272 x 10 x 48.3	
				PRO	92120805	ø 288 x 25 x 49.8				TPM0008		
					TPM0008							
		762000	Ate		2358701	[+] 23587 20.3		Luc		2355402	[–] 23554 17.2	
1.4 TSI	03/11→	118 / 160	Ate	epad	2358781	[+] 23587 20.3		Luc	epad	2355481	[–] 23554 17.2	
2.0 TDI	11/11→	103 / 140	Ate		82076800			Luc		82037300		
				PRO	92120503	ø 312 x 25 x 49.7			PRO	92120903	ø 255 x 10 x 51.6	
					TPM0008					TPM0008		
		762100	Ate		2358701	[+] 23587 20.3		Bos		2456301	[–] 24563 17.7	
2.0 GTI	11/11→	155 / 211	Ate	epad	2358781	[+] 23587 20.3		Bos		82054300		
			Ate		82076800				PRO	92224903	ø 272 x 10 x 48.3	

T - Z

		kW / hp											
GOLF VI Convertible (517) 03/11→													
2.0 GTI	11/11→	762100 155 / 211		PRO	92120503	ø 312 x 25 x 49.7			TPM0008				
				TPM0008									
2.0 R	01/13→	762200 195 / 265	Ate		2391301	[+] 23913 20.3		Luc	2391401	[o] 23914 17.2			
			Luc		82518200			Luc	epad 2391481	[o] 23914 17.2			
				PRO	92120603	ø 345 x 30 x 49.9		Luc	82502000				
				TPM0008					PRO 92140703	ø 310 x 22 x 48.5			
									TPM0008				
2.0 TDI	11/13→	762300 110 / 150	Ate		2358701	[+] 23587 20.3	PR 1ZE,1ZP,1ZD,1LV PR 1ZA,1ZB	Luc	2355402	[–] 23554 17.2	PR 1KD		
2.0 TSI	11/13→	162 / 220	Ate	epad	2358781	[+] 23587 20.3	PR 1ZE,1ZP,1ZD,1LV PR 1ZA,1ZB	Luc	epad 2355481	[–] 23554 17.2	PR 1KD		
			Ate		2391301	[+] 23913 20.3	PR 1ZK	Bos	2456301	[–] 24563 17.7	PR 1KS,1KT		
			Ate		82076800		PR 1ZE,1ZP,1ZA PR 1ZD,1ZB	Luc	2391401	[o] 23914 17.2	PR 1KW		
			Luc		82518200		PR 1ZK	Luc	epad 2391481	[o] 23914 17.2	PR 1KW		
				PRO	92120503	ø 312 x 25 x 49.7	PR 1ZA,1ZD,1ZB	Bos	82054300		PR 1KS,1KT		
				PRO	92120603	ø 345 x 30 x 49.9	PR 1ZK	Luc	82502000		PR 1KW		
				PRO	92120803	ø 288 x 25 x 49.8	PR 1ZE,1ZP	Luc	82509000		PR 1KD		
				PRO	92120805	ø 288 x 25 x 49.8	PR 1ZE,1ZP		PRO 92120903	ø 255 x 10 x 51.6	PR 1KD		
				TPM0008					PRO 92224903	ø 272 x 10 x 48.3	PR 1KS,1KT		
									PRO 92140703	ø 310 x 22 x 48.5	PR 1KW		
									TPM0008				
GOLF VI Variant (AJ5) 07/09→07/13													
1.2 TSI	08/09→07/13	762400 77 / 105	Ate		2313101	[+] 23131 19.7		Bos	2456301	[–] 24563 17.7			
1.2 TSI	07/10→07/13	63 / 86											
1.6 TDI	12/09→07/13	66 / 90	Ate	epad	2313181	[+] 23131 19.7		Bos	82054300				
				PRO	92120703	ø 280 x 22 x 49.9			PRO 92224903	ø 272 x 10 x 48.3			
				PRO	92120705	ø 280 x 22 x 49.9			TPM0008				
				TPM0008									
1.4	07/09→07/13	762500 59 / 80	Ate		2313101	[+] 23131 19.7		Luc	2391401	[o] 23914 17.2	→01/10		
			Ate	epad	2313181	[+] 23131 19.7		Luc	epad 2391481	[o] 23914 17.2	→01/10		
				PRO	92120703	ø 280 x 22 x 49.9		Luc	82509000		→01/10		
				PRO	92120705	ø 280 x 22 x 49.9			PRO 92121103	ø 256 x 12 x 48.4	→01/10		
				TPM0008					TPM0008				
1.4 TSI	07/09→07/13	762600 90 / 122	Ate		2358701	[+] 23587 20.3		Bos	2456301	[–] 24563 17.7	Ø 272 mm 11/09→		
			Ate	epad	2358781	[+] 23587 20.3		Luc	2391401	[o] 23914 17.2	→01/10 Ø 256 mm		
			Ate		82076800			Luc	epad 2391481	[o] 23914 17.2	→01/10 Ø 256 mm		
				PRO	92120803	ø 288 x 25 x 49.8		Bos	82054300		Ø 272 mm 11/09→		
				PRO	92120805	ø 288 x 25 x 49.8		Luc	82509000		Ø 256 mm →01/10		
				TPM0008					PRO 92121103	ø 256 x 12 x 48.4	→01/10		
									PRO 92224903	ø 272 x 10 x 48.3	11/09→		
									TPM0008				
1.4 TSI	07/09→07/13	762700 118 / 160	Ate		2358701	[+] 23587 20.3		Bos	2456301	[–] 24563 17.7	Ø 272 mm 11/09→		
			Ate	epad	2358781	[+] 23587 20.3		Luc	2391401	[o] 23914 17.2	→01/10 Ø 256 mm		

T - Z

GOLF VI Variant (AJ5) 07/09→07/13

		kW / hp											
1.4 TSI	07/09→07/13	762700 118 / 160	Ate	82076800			Luc	2391481	[o] 23914 17.2	→01/10 Ø 256 mm
			PRO	92120503	ø 312 x 25 x 49.7		Bos	82054300		Ø 272 mm 11/09→
				TPM0008			Luc	82509000		Ø 256 mm →01/10
							PRO	92121103	ø 256 x 12 x 48.4	→01/10
							PRO	92224903	ø 272 x 10 x 48.3	11/09→
								TPM0008		
1.6	07/09→07/13	762800 75 / 102	Ate	2313101	[+] 23131 19.7		Bos	2456301	[–] 24563 17.7	11/09→
			Ate epad	2313181	[+] 23131 19.7		Bos	82054300		11/09→
			PRO	92120703	ø 280 x 22 x 49.9		PRO	92224903	ø 272 x 10 x 48.3	11/09→
			PRO	92120705	ø 280 x 22 x 49.9					
				TPM0008				TPM0008		
1.6 MultiFuel	07/10→07/13	762900 75 / 102	Ate	2313101	[+] 23131 19.7	Ø 280 mm PR 1ZM	Bos	2456301	[–] 24563 17.7	Ø 272 mm PR 1KS,1KT
1.6 TDI	07/09→07/13	77 / 105								
1.6 TDI 4motion	07/09→07/13	77 / 105	Ate epad	2313181	[+] 23131 19.7	Ø 280 mm PR 1ZM	Luc	2391401	[o] 23914 17.2	Ø 256 mm PR 1KE,1KF
2.0 TDI	07/09→07/13	100 / 136								Ø 286 mm PR 1KJ
			Ate	2358701	[+] 23587 20.3	Ø 288 mm PR 1ZE,1ZP	Luc epad	2391481	[o] 23914 17.2	Ø 256 mm PR 1KE,1KF
						Ø 312 mm PR 1LJ,1ZD,1ZA				Ø 286 mm PR 1KJ
			Ate epad	2358781	[+] 23587 20.3	Ø 288 mm PR 1ZE,1ZP	Bos	82054300		Ø 272 mm PR 1KS,1KT
						Ø 312 mm PR 1LJ,1ZD,1ZA				
			Ate	82076800		Ø 288 mm PR 1ZE,1ZP	Luc	82509000		Ø 256 mm PR 1KE,1KF
						Ø 312 mm PR 1LJ,1ZD,1ZA				Ø 286 mm PR 1KJ
			PRO	92120503	ø 312 x 25 x 49.7	PR 1LJ,1ZD,1ZA	PRO	92121103	ø 256 x 12 x 48.4	PR 1KE,1KF
			PRO	92120703	ø 280 x 22 x 49.9	PR 1ZM	PRO	92140803	ø 282 x 12 x 48.5	PR 1KJ
			PRO	92120705	ø 280 x 22 x 49.9	PR 1ZM	PRO	92224903	ø 272 x 10 x 48.3	PR 1KS,1KT
			PRO	92120803	ø 288 x 25 x 49.8	PR 1ZE,1ZP				
			PRO	92120805	ø 288 x 25 x 49.8	PR 1ZE,1ZP		TPM0008		
				TPM0008						
2.0 TDI	01/10→07/13	763000 81 / 110	Ate	2313101	[+] 23131 19.7	PR 1ZM	Bos	2456301	[–] 24563 17.7	PR 1KS,1KT
2.0 TSI	07/09→07/13	147 / 200								
2.5	07/09→07/10	125 / 170	Ate epad	2313181	[+] 23131 19.7	PR 1ZM	Luc	2391401	[o] 23914 17.2	PR 1KF,1KJ,1KE
			Ate	2358701	[+] 23587 20.3	PR 1ZE,1ZP,1ZA,1LJ PR 1ZD	Luc epad	2391481	[o] 23914 17.2	PR 1KF,1KJ,1KE
			Ate epad	2358781	[+] 23587 20.3	PR 1ZE,1ZP,1ZA,1LJ PR 1ZD	Bos	82054300		PR 1KS,1KT
			Ate	82076800		PR 1ZE,1ZP,1LJ PR 1ZD,1ZA	Luc	82509000		PR 1KE,1KF,1KJ
			PRO	92120503	ø 312 x 25 x 49.7	PR 1LJ,1ZD,1ZA	PRO	92121103	ø 256 x 12 x 48.4	PR 1KE,1KF
			PRO	92120703	ø 280 x 22 x 49.9	PR 1ZM	PRO	92140803	ø 282 x 12 x 48.5	PR 1KJ
			PRO	92120705	ø 280 x 22 x 49.9	PR 1ZM	PRO	92224903	ø 272 x 10 x 48.3	PR 1KS,1KT
			PRO	92120803	ø 288 x 25 x 49.8	PR 1ZE,1ZP				
			PRO	92120805	ø 288 x 25 x 49.8	PR 1ZE,1ZP		TPM0008		
				TPM0008						
2.0 TDI 16V	07/09→07/13	763100 103 / 140	Ate	2358701	[+] 23587 20.3		Bos	2456301	[–] 24563 17.7	Ø 272 mm 09/09→
			Ate epad	2358781	[+] 23587 20.3		Luc	2391401	[o] 23914 17.2	→01/10 Ø 256 mm
			Ate	82076800			Luc epad	2391481	[o] 23914 17.2	→01/10 Ø 256 mm
			PRO	92120503	ø 312 x 25 x 49.7		Bos	82054300		Ø 272 mm 09/09→
				TPM0008			Luc	82509000		Ø 256 mm →01/10
							PRO	92121103	ø 256 x 12 x 48.4	→01/10
							PRO	92224903	ø 272 x 10 x 48.3	11/09→

T - Z

		kW / hp											
GOLF VI Variant (AJ5) 07/09→07/13													
		763100											
2.0 TDI 16V	07/09→07/13	103 / 140								TPM0008			
GOLF VII (5G1) 08/12→													
		763200	TRW		2568301	[+] 25683 20.3		Ate		2500801	[–] 25008 16.4		
1.2 TSI	08/12→	63 / 86											
1.2 TSI	11/12→	77 / 105		PRO	92120803	ø 288 x 25 x 49.8		Ate		82503500			
1.6 TDI 4motion	11/12→	77 / 105											
2.0 TDI 4motion	11/12→	110 / 150		PRO	92120805	ø 288 x 25 x 49.8			PRO	92224903	ø 272 x 10 x 48.3		
e-Golf	02/14→	85 / 115											
					TPM0008					TPM0008			
		763300	TRW		2568301	[+] 25683 20.3		Ate		2500801	[–] 25008 16.4		
1.2 TSI	04/14→	81 / 110											
1.4 TSI	05/14→	110 / 150			98050800	L170		Ate		82503500			
1.4 TSI MultiFuel	12/13→	92 / 125											
1.6	05/14→	81 / 110		PRO	92120803	ø 288 x 25 x 49.8			PRO	92224903	ø 272 x 10 x 48.3		
1.6 TDI	01/13→	81 / 110											
1.6 TDI	04/13→	66 / 90		PRO	92120805	ø 288 x 25 x 49.8				TPM0008			
1.6 TDI 4motion	01/13→	81 / 110											
2.0 TDI	11/12→	81 / 110			TPM0008								
		763400	TRW		2568301	[+] 25683 20.3		Ate		2500801	[–] 25008 16.4		
1.4 GTE Hybrid	05/14→	110 / 150											
1.4 TSI	11/12→	90 / 122			98050800	L170		Ate		82503500			
1.4 TSI	05/14→	92 / 125											
2.0 GTD	04/13→	135 / 184		PRO	92120503	ø 312 x 25 x 49.7			PRO	92224903	ø 272 x 10 x 48.3		
					TPM0008					TPM0008			
		763500	TRW		2473801	[+] 24738 20	PR 1LJ,1LM	Ate		2500801	[–] 25008 16.4	PR 1KE	
1.4 TGI CNG	06/13→	81 / 110											
2.0 TDI	08/12→	105 / 143	TRW		2568301	[+] 25683 20.3	PR 1ZE,1ZA, 1ZB PR 1ZP, 1ZD, 1LV	Ate		2500901	[–] 25009 16.4	PR 1KJ,1KY, 1KV	
				PRO	92120503	ø 312 x 25 x 49.7	PR 1ZA,1ZB,1ZD,1LV	Ate		82503500			
				PRO	92120803	ø 288 x 25 x 49.8	PR 1ZE,1ZP		PRO	92224903	ø 272 x 10 x 48.3	PR 1KE	
				PRO	92120805	ø 288 x 25 x 49.8	PR 1ZE,1ZP		PRO	92255403	ø 300 x 12 x 48.3	PR 1KV	
				PRO	92229803	ø 340 x 30 x 49.7	PR 1LJ,1LM			TPM0008			
					TPM0008								
		763600	TRW		2568301	[+] 25683 20.3		Ate		2500801	[–] 25008 16.4		
1.4 TSI	11/12→	103 / 140											
1.4 TSI MultiFuel	04/13→	90 / 122		PRO	92120503	ø 312 x 25 x 49.7		Ate		82503500			
1.6 TDI	08/12→	77 / 105											
2.0 TDI	11/12→	110 / 150			TPM0008				PRO	92224903	ø 272 x 10 x 48.3		
										TPM0008			
		763700	Ate		2391301	[+] 23913 20.3		Luc		2391401	[o] 23914 17.2		
2.0 4motion	09/12→	191 / 260											
			Luc		82518200			Luc	epad	2391481	[o] 23914 17.2		
				PRO	92120603	ø 345 x 30 x 49.9		Luc		82502000			
					TPM0008				PRO	92140703	ø 310 x 22 x 48.5		
										TPM0008			
		763800	TRW		2568301	[+] 25683 20.3		Ate		2500901	[–] 25009 16.4		
2.0 GTI	04/13→	162 / 220											
					98050800	L170		Ate		82503500			
				PRO	92120503	ø 312 x 25 x 49.7			PRO	92255403	ø 300 x 12 x 48.3		
					TPM0008					TPM0008			
		763900	TRW		2473801	[+] 24738 20		Ate		2500901	[–] 25009 16.4		
2.0 GTI	04/13→	169 / 230											
					98050800	L170		Ate		82503500			
				PRO	92229803	ø 340 x 30 x 49.7			PRO	92140703	ø 310 x 22 x 48.5		
					TPM0008					TPM0008			
		764000	TRW		2473801	[+] 24738 20		Ate		2500901	[–] 25009 16.4		
2.0 R 4motion	11/13→	206 / 280											
2.0 R 4motion	11/13→	221 / 300											

T - Z

		kW / hp											
GOLF VII (5G1) 08/12→													
764000									Ate		82503500		
2.0 R 4motion	11/13→	206 / 280											
2.0 R 4motion	11/13→	221 / 300		TPM0008						92140703	ø 310 x 22 x 48.5		
										TPM0008			
764100			Ate	2358701	[+] 23587 20.3		Bos		2456301	[–] 24563 17.7			
2.0 TDI	07/13→	104 / 141											
2.5	09/12→	112 / 152	Ate	2358781	[+] 23587 20.3		Bos		82054300				
2.5 FSI	09/13→	127 / 173											
			Ate	82076800					92224903	ø 272 x 10 x 48.3			
				92120803	ø 288 x 25 x 49.8				TPM0008				
				92120805	ø 288 x 25 x 49.8								
				TPM0008									
GOLF VII Estate (BA5) 09/11→													
764200			TRW	2568301	[+] 25683 20.3	PR 1ZA,1ZD Ø 312 mm PR 1ZE,1ZP Ø 288 mm	Ate		2500801	[–] 25008 16.4			
1.2 TSI	05/13→	63 / 86											
1.2 TSI	05/13→	77 / 105		92120503	ø 312 x 25 x 49.7	PR 1ZA,1ZD	Ate		82503500				
1.4 TSI	05/13→	90 / 122											
1.6 TDI	05/13→	77 / 105		92120803	ø 288 x 25 x 49.8	PR 1ZE,1ZP			92224903	ø 272 x 10 x 48.3			
2.0 TDI	04/13→	110 / 150											
				92120805	ø 288 x 25 x 49.8	PR 1ZE,1ZP			TPM0008				
				TPM0008									
764300			TRW	2568301	[+] 25683 20.3		Ate		2500801	[–] 25008 16.4			
1.2 TSI	04/14→	81 / 110											
1.4 TSI	05/14→	110 / 150		98050800	L170		Ate		82503500				
1.4 TSI MultiFuel	04/13→	90 / 122											
1.4 TSI MultiFuel	05/14→	92 / 125		92120803	ø 288 x 25 x 49.8				92224903	ø 272 x 10 x 48.3			
1.6	05/14→	81 / 110											
1.6 TDI	05/13→	66 / 90		92120805	ø 288 x 25 x 49.8				TPM0008				
1.6 TDI	05/13→	81 / 110											
1.6 TDI 4motion	05/13→	77 / 105											
2.0 TDI	05/13→	81 / 110		TPM0008									
2.0 TDI 4motion	04/13→	110 / 150											
764400			TRW	2473801	[+] 24738 20	PR 1LJ,1LM	Ate		2500801	[–] 25008 16.4	PR 1KE		
1.4 TGI CNG	09/13→	81 / 110											
			TRW	2568301	[+] 25683 20.3	PR 1ZE,1ZA, 1ZB PR 1ZP, 1ZD, 1LV	Ate		2500901	[–] 25009 16.4	PR 1KJ,1KY, 1KV		
				92120503	ø 312 x 25 x 49.7	PR 1ZA,1ZB,1ZD,1LV	Ate		82503500				
				92120803	ø 288 x 25 x 49.8	PR 1ZE,1ZP			92224903	ø 272 x 10 x 48.3	PR 1KE		
				92120805	ø 288 x 25 x 49.8	PR 1ZE,1ZP			92255403	ø 300 x 12 x 48.3	PR 1KV		
				92229803	ø 340 x 30 x 49.7	PR 1LJ,1LM			TPM0008				
				TPM0008									
764500			TRW	2568301	[+] 25683 20.3		Ate		2500801	[–] 25008 16.4			
1.4 TSI	05/13→	103 / 140											
1.4 TSI	05/14→	92 / 125		98050800	L170		Ate		82503500				
1.6 TDI 4motion	05/13→	81 / 110											
				92120503	ø 312 x 25 x 49.7				92224903	ø 272 x 10 x 48.3			
				TPM0008					TPM0008				
764600			Ate	2358701	[+] 23587 20.3		Bos		2456301	[–] 24563 17.7			
2.0 TDI	07/13→	104 / 141											
2.5	09/11→	112 / 152	Ate	2358781	[+] 23587 20.3		Bos		82054300				
			Ate	82076800					92224903	ø 272 x 10 x 48.3			
				92120803	ø 288 x 25 x 49.8				TPM0008				
				92120805	ø 288 x 25 x 49.8								
				TPM0008									

GOLF VII Kombi (BA5) 09/11→ → GOLF VII Estate (BA5), Page 1229
GOLF Mk III Cabriolet (1E7) 06/98→06/02 → GOLF IV Cabriolet (1E7), Page 1218
GOLF Mk III Convertible (1E7) 06/98→06/02 → GOLF IV Cabriolet (1E7), Page 1218
GOLF Mk III Estate (1H5) 07/93→04/99 → GOLF III Variant (1H5), Page 1211
GOLF Mk IV (1J1) 08/97→04/08 → GOLF IV (1J1), Page 1214

kW / hp

GOLF Mk IV Estate (1J5) 05/99→06/06 → GOLF IV Variant (1J5), Page 1219

GOLF PLUS (5M1, 521) 01/05→06/08

		764700	Ate		2313001	[–] 23130 19.7		Luc		2355402	[–] 23554 17.2	
1.0	08/05→	48 / 65										
1.0	10/05→	53 / 72	Ate	epad	2313081	[–] 23130 19.7		Luc	epad	2355481	[–] 23554 17.2	
1.2 TSI	11/09→	77 / 105										
1.2 TSI	05/10→	63 / 86										
1.4 16V	01/05→	55 / 75	Ate		2313101	[+] 23131 19.7		Luc		82037300		
1.4 16V	05/06→	59 / 80										
1.4 FSI	07/05→	66 / 90	Ate	epad	2313181	[+] 23131 19.7		Luc		82063300		
1.6	05/05→	75 / 102										
1.6 BiFuel	05/09→	75 / 102										
1.6 MultiFuel	11/07→	75 / 102		PRO	92120703	ø 280 x 22 x 49.9			PRO	92120903	ø 255 x 10 x 51.6	
1.6 TDI	02/09→	66 / 90										
1.9 TDI	05/05→12/08	66 / 90		PRO	92120705	ø 280 x 22 x 49.9				TPM0008		
					TPM0008							
		764800	Ate		2358704	[–] 23587 20.3		Luc		2355402	[–] 23554 17.2	
1.4 TSI	05/06→06/08	103 / 140										
1.4 TSI	06/07→	90 / 122	Ate	epad	2358782	[–] 23587 20.3		Luc	epad	2355481	[–] 23554 17.2	
1.6 FSI	01/05→05/08	85 / 115										
1.6 TDI	03/09→	77 / 105										
1.9 TDI	01/05→01/09	77 / 105	Ate		2358701	[+] 23587 20.3		Luc		82037300		
2.0 TDI	05/05→	100 / 136										
2.0 TDI	12/05→05/09	103 / 140										
2.0 TDI 16V	01/05→	103 / 140	Ate	epad	2358781	[+] 23587 20.3		Luc		82063300		
			Ate		82076800				PRO	92120903	ø 255 x 10 x 51.6	
				PRO	92120803	ø 288 x 25 x 49.8						
				PRO	92120805	ø 288 x 25 x 49.8				TPM0008		
					TPM0008							
		764900	Ate		2358704	[–] 23587 20.3		Luc		2391401	[o] 23914 17.2	
1.4 TSI	05/06→06/08	125 / 170										
			Ate		2358782	[–] 23587 20.3		Luc	epad	2391481	[o] 23914 17.2	
			Ate		2358701	[+] 23587 20.3		Luc		82509000		
			Ate	epad	2358781	[+] 23587 20.3			PRO	92140803	ø 282 x 12 x 48.5	
			Ate		82076800					TPM0008		
				PRO	92120503	ø 312 x 25 x 49.7						
					TPM0008							
		765000	Ate		2358704	[–] 23587 20.3		Luc		2355402	[–] 23554 17.2	
1.4 TSI	06/08→	118 / 160										
			Ate		2358782	[–] 23587 20.3		Luc	epad	2355481	[–] 23554 17.2	
			Ate		2358701	[+] 23587 20.3		Luc		82037300		
			Ate	epad	2358781	[+] 23587 20.3		Luc		82063300		
			Ate		82076800				PRO	92120903	ø 255 x 10 x 51.6	
				PRO	92120503	ø 312 x 25 x 49.7				TPM0008		
					TPM0008							
		765100	Ate		2358704	[–] 23587 20.3		Luc		2355402	[–] 23554 17.2	Ø 255 mm PR 1KD
2.0 FSI	05/05→06/08	110 / 150										
			Ate		2358782	[–] 23587 20.3		Luc	epad	2355481	[–] 23554 17.2	Ø 255 mm PR 1KD
			Ate		2358701	[+] 23587 20.3		Luc		2391401	[o] 23914 17.2	Ø 256 mm PR 1KE
			Ate	epad	2358781	[+] 23587 20.3		Luc	epad	2391481	[o] 23914 17.2	Ø 256 mm PR 1KE
			Ate		82076800			Luc		82037300		Ø 255 mm PR 1KD
				PRO	92120803	ø 288 x 25 x 49.8		Luc		82509000		Ø 256 mm PR 1KE
				PRO	92120805	ø 288 x 25 x 49.8		Luc		82063300		
					TPM0008				PRO	92120903	ø 255 x 10 x 51.6	PR 1KD
									PRO	92121103	ø 256 x 12 x 48.4	PR 1KE
										TPM0008		

T - Z

→

kW / hp

GOLF PLUS (5M1, 521) 01/05→06/08

765200

2.0 TDI	05/05→05/07	96 / 131	Ate		2313001	[–] 23130	19.7	PR 1ZF+9U0 Ø 280 mm	Luc		2355402	[–] 23554	17.2	Ø 255 mm PR 1KD
2.0 TDI	01/09→	81 / 110	Ate	epad	2313081	[–] 23130	19.7	PR 1ZF+9U0 Ø 280 mm	Luc	epad	2355481	[–] 23554	17.2	Ø 255 mm PR 1KD
			Ate		2358704	[–] 23587	20.3	PR 1ZE+9U0 Ø 288 mm PR 1LJ-9U0 Ø 312 mm	Luc		2391401	[o] 23914	17.2	PR 1KE Ø 256 mm PR 1KZ Ø 286 mm
			Ate		2358782	[–] 23587	20.3	PR 1ZE+9U0 Ø 288 mm PR 1LJ-9U0 Ø 312 mm	Luc	epad	2391481	[o] 23914	17.2	PR 1KE Ø 256 mm PR 1KZ Ø 286 mm
			Ate		2313101	[+] 23131	19.7	PR 1ZF+9U1,1ZM Ø 280 mm	Luc		82037300			Ø 255 mm PR 1KD
			Ate	epad	2313181	[+] 23131	19.7	PR 1ZF+9U1,1ZM Ø 280 mm	Luc		82509000			PR 1KE Ø 256 mm PR 1KZ Ø 286 mm
			Ate		2358701	[+] 23587	20.3	PR 1ZE+9U1,1ZP Ø 288 mm PR 1LJ+9U1 Ø 312 mm	Luc		82063300			PR 1KD,1KE
			Ate	epad	2358781	[+] 23587	20.3	PR 1ZE+9U1,1ZP Ø 288 mm PR 1LJ+9U1 Ø 312 mm		PRO	92120903	ø 255 x 10 x 51.6		PR 1KD
			Ate		82076800			PR 1ZE+9U1,1ZP Ø 288 mm PR 1LJ+9U1 Ø 312 mm		PRO	92121103	ø 256 x 12 x 48.4		PR 1KE
				PRO	92120503	ø 312 x 25 x 49.7		PR 1LJ		PRO	92140803	ø 282 x 12 x 48.5		PR 1KZ
				PRO	92120703	ø 280 x 22 x 49.9		PR 1ZF,1ZM			TPM0008			
				PRO	92120705	ø 280 x 22 x 49.9		PR 1ZF,1ZM						
				PRO	92120803	ø 288 x 25 x 49.8		PR 1ZE,1ZP						
				PRO	92120805	ø 288 x 25 x 49.8		PR 1ZE,1ZP						
					TPM0008									

GOLF SPORTSVAN 02/14→

765300

1.2 TSI	04/14→	81 / 110	TRW		2568301	[+] 25683	20.3	PR 1ZE,1ZP,1ZA	Ate		2500801	[–] 25008	16.4	
1.2 TSI	05/14→	63 / 86		PRO	92120503	ø 312 x 25 x 49.7		PR 1ZA	Ate		82503500			
1.4 TSI	02/14→	110 / 150		PRO	92120803	ø 288 x 25 x 49.8		PR 1ZE,1ZP		PRO	92224903	ø 272 x 10 x 48.3		
1.4 TSI	04/14→	92 / 125		PRO	92120805	ø 288 x 25 x 49.8		PR 1ZE,1ZP			TPM0008			
1.4 TSI MultiFuel	04/14→	92 / 125			TPM0008									
1.6	05/14→	81 / 110												
1.6 TDI	02/14→	66 / 90												
1.6 TDI	02/14→	81 / 110												
2.0 TDI	02/14→	110 / 150												
2.0 TDI	05/14→	81 / 110												

IBIZA 05/96→07/02 → POLO PLAYA, Page 1260

JETTA I Saloon (1K2) 08/05→10/10 → JETTA III (1K2), Page 1231

JETTA I Stufenheck (1K2) 08/05→10/10 → JETTA III (1K2), Page 1231

JETTA III (1K2) 08/05→10/10

765400

1.4 TSI	07/06→10/10	103 / 140	Ate		2358701	[+] 23587	20.3		Luc		2391401	[o] 23914	17.2	
			Ate	epad	2358781	[+] 23587	20.3		Luc	epad	2391481	[o] 23914	17.2	
			Ate		82062900				Luc		82509000			
			Ate		82076800				Luc		82063300			
				PRO	92120803	ø 288 x 25 x 49.8				PRO	92121103	ø 256 x 12 x 48.4		
				PRO	92120805	ø 288 x 25 x 49.8					TPM0008			
					TPM0008									

765500

1.4 TSI	07/06→10/10	125 / 170	Ate		2358701	[+] 23587	20.3		Luc		2391401	[o] 23914	17.2	
2.0	08/05→06/08	136 / 185	Ate	epad	2358781	[+] 23587	20.3		Luc	epad	2391481	[o] 23914	17.2	
2.0 TDI	10/06→10/10	125 / 170	Ate		82062900				Luc		82509000			
2.0 TFSI	10/05→10/10	147 / 200	Ate		82076800				Luc		82063300			
2.5 FSI	07/08→10/10	125 / 170		PRO	92120503	ø 312 x 25 x 49.7				PRO	92140803	ø 282 x 12 x 48.5		
					TPM0008						TPM0008			

765600

1.4 TSI	05/07→10/10	90 / 122	Ate		2358701	[+] 23587	20.3		Luc		2391401	[o] 23914	17.2	PR 1KE,1KF
2.0 FSI	08/05→10/10	110 / 150	Ate	epad	2358781	[+] 23587	20.3		Luc	epad	2391481	[o] 23914	17.2	PR 1KE,1KF
2.0 TDI	10/05→10/10	103 / 140	Ate		82062900				Luc		82509000			
2.0 TDI 16V	08/05→10/10	103 / 140												

T - Z

		kW / hp									
JETTA III (1K2) 08/05→10/10											
765600			Ate		82076800			Luc		82063300		
1.4 TSI	05/07→10/10	90 / 122		PRO	92120803	ø 288 x 25 x 49.8			PRO	92121103	ø 256 x 12 x 48.4	PR 1KE,1KF
2.0 FSI	08/05→10/10	110 / 150		PRO	92120805	ø 288 x 25 x 49.8				TPM0008		
2.0 TDI	10/05→10/10	103 / 140			TPM0008							
2.0 TDI 16V	08/05→10/10	103 / 140										
765700			Ate		2358701	[+] 23587 20.3		Bos		2456301	[–] 24563 17.7	Ø 272 mm PR 1KS
1.4 TSI	07/08→10/10	118 / 160	Ate	epad	2358781	[+] 23587 20.3		Luc		2391401	[o] 23914 17.2	PR 1KE,1KF
			Ate		82062900			Luc	epad	2391481	[o] 23914 17.2	PR 1KE,1KF
			Ate		82076800			Luc		82509000		
				PRO	92120503	ø 312 x 25 x 49.7		Luc		82063300		
					TPM0008				PRO	92121103	ø 256 x 12 x 48.4	PR 1KE,1KF
									PRO	92224903	ø 272 x 10 x 48.3	PR 1KS
										TPM0008		
765800			Ate		2313101	[+] 23131 19.7		Luc		2391401	[o] 23914 17.2	
1.6	10/05→10/10	75 / 102	Ate	epad	2313181	[+] 23131 19.7		Luc	epad	2391481	[o] 23914 17.2	
1.6 FSI	09/05→10/10	85 / 115	Ate		82062900			Luc		82509000		
1.6 MultiFuel	01/08→10/10	75 / 102		PRO	92120703	ø 280 x 22 x 49.9		Luc		82063300		
1.6 TDI	06/09→10/10	77 / 105		PRO	92120705	ø 280 x 22 x 49.9			PRO	92121103	ø 256 x 12 x 48.4	
1.6 TDI	12/09→10/10	66 / 90			TPM0008					TPM0008		
1.9 TDI	08/05→10/10	77 / 105										
765900			Ate		2313101	[+] 23131 19.7	PR 1ZM Ø 280 mm	Luc		2391401	[o] 23914 17.2	
2.0 TDI	09/05→10/10	100 / 136	Ate	epad	2313181	[+] 23131 19.7	PR 1ZM Ø 280 mm	Luc	epad	2391481	[o] 23914 17.2	
2.5 FSI	01/06→10/10	110 / 150	Ate		2358701	[+] 23587 20.3	PR 1ZE,1ZP Ø 288 mm PR 1LJ,1ZD,1LV,1LL Ø 312 mm	Luc		82509000		
			Ate	epad	2358781	[+] 23587 20.3	PR 1ZE,1ZP Ø 288 mm PR 1LJ,1ZD,1LV,1LL Ø 312 mm	Luc		82063300		
			Ate		82062900				PRO	92121103	ø 256 x 12 x 48.4	PR 1KE,1KF
			Ate		82076800		PR 1ZE,1ZP Ø 288 mm PR 1LJ,1ZD,1LV,1LL Ø 312 mm		PRO	92140803	ø 282 x 12 x 48.5	PR 1KJ,1KV
				PRO	92120503	ø 312 x 25 x 49.7	PR 1LJ,1ZD,1LV,1LL			TPM0008		
				PRO	92120703	ø 280 x 22 x 49.9	PR 1ZM					
				PRO	92120705	ø 280 x 22 x 49.9	PR 1ZM					
				PRO	92120803	ø 288 x 25 x 49.8	PR 1ZE,1ZP					
				PRO	92120805	ø 288 x 25 x 49.8	PR 1ZE,1ZP					
					TPM0008							
766000			Ate		2358701	[+] 23587 20.3		Luc		2391401	[o] 23914 17.2	
2.5	09/05→12/07	112 / 152	Ate	epad	2358781	[+] 23587 20.3		Luc	epad	2391481	[o] 23914 17.2	
			Ate		82076800				PRO	92121103	ø 256 x 12 x 48.4	
				PRO	92120803	ø 288 x 25 x 49.8				TPM0008		
				PRO	92120805	ø 288 x 25 x 49.8						
					TPM0008							
JETTA IV (1J2) 10/98→07/05 → BORA (1J2), Page 1197											
JETTA IV (162, 163) 04/10→											
766100			Ate		2313101	[+] 23131 19.7	Ø 280 mm PR 1ZM	Bos		2456301	[–] 24563 17.7	⊕ rear disc brake
1.2 TSI	02/11→	77 / 105	Ate	epad	2313181	[+] 23131 19.7	Ø 280 mm PR 1ZM	Bos		82054300		⊕ rear disc brake
1.6 TDI	02/11→	77 / 105										

T - Z

30 kW / hp

JETTA IV (162, 163) 04/10→

766100													
1.2 TSI	02/11→	77 / 105	Ate		2358701	[+] 23587 20.3	Ø 288 mm PR 1ZE			92224903	ø 272 x 10 x 48.3	⊕ rear disc brake
1.6 TDI	02/11→	77 / 105	Ate	epad	2358781	[+] 23587 20.3	Ø 288 mm PR 1ZE			TPM0008		
			Ate		82076800		Ø 288 mm PR 1ZE					
				PRO	92120703	ø 280 x 22 x 49.9	PR 1ZM					
				PRO	92120705	ø 280 x 22 x 49.9	PR 1ZM					
				PRO	92120803	ø 288 x 25 x 49.8	PR 1ZE					
				PRO	92120805	ø 288 x 25 x 49.8	PR 1ZE					
					TPM0008							
766200													
1.4 TSI	04/11→	118 / 160	Ate		2358701	[+] 23587 20.3		Bos		2456301	[–] 24563 17.7	
2.0 Total Flex	12/10→	147 / 200	Ate	epad	2358781	[+] 23587 20.3		Bos		82054300		
2.0 TSI	12/10→	147 / 200	Ate		82076800				PRO	92224903	ø 272 x 10 x 48.3	
2.0 TSI	12/12→	155 / 211		PRO	92120503	ø 312 x 25 x 49.7				TPM0008		
					TPM0008							
766300													
1.4 TSI	04/11→07/14	110 / 150	Ate		2358701	[+] 23587 20.3		Bos		2456301	[–] 24563 17.7	
1.4 TSI	05/11→	90 / 122	Ate	epad	2358781	[+] 23587 20.3		Bos		82054300		
1.4 TSI Hybrid	04/11→	110 / 150	Ate		82076800				PRO	92224903	ø 272 x 10 x 48.3	
2.0 TDI	02/11→	103 / 140		PRO	92120803	ø 288 x 25 x 49.8				TPM0008		
				PRO	92120805	ø 288 x 25 x 49.8						
					TPM0008							
766400													
1.6	12/11→	77 / 105	Ate		2313101	[+] 23131 19.7		Luc		2355402	[–] 23554 17.2	
1.6	12/11→	77 / 105	Ate	epad	2313181	[+] 23131 19.7		Luc	epad	2355481	[–] 23554 17.2	
				PRO	92120703	ø 280 x 22 x 49.9			PRO	92120903	ø 255 x 10 x 51.6	
				PRO	92120705	ø 280 x 22 x 49.9				TPM0008		
					TPM0008							
766500													
2.0	06/10→	85 / 115	Ate		2313101	[+] 23131 19.7		Luc		2355402	[–] 23554 17.2	PR 1KS
												2011-12→ PR 1KD
			Ate	epad	2313181	[+] 23131 19.7		Luc	epad	2355481	[–] 23554 17.2	PR 1KS
												2011-12→ PR 1KD
				PRO	92120703	ø 280 x 22 x 49.9		Bos		2456301	[–] 24563 17.7	Ø 272 mm PR 1KS
				PRO	92120705	ø 280 x 22 x 49.9		Bos		82054300		Ø 272 mm PR 1KS
					TPM0008				PRO	92120903	ø 255 x 10 x 51.6	2011-12→ PR 1KD
									PRO	92224903	ø 272 x 10 x 48.3	PR 1KS
										TPM0008		
766600													
2.0	09/10→	86 / 117	Ate		2313101	[+] 23131 19.7						
2.0 Flex	10/10→	88 / 120	Ate	epad	2313181	[+] 23131 19.7						
2.0 Total Flex	10/10→	85 / 115		PRO	92120703	ø 280 x 22 x 49.9						
				PRO	92120705	ø 280 x 22 x 49.9						
					TPM0008							
766700													
2.0 TDI	10/10→	81 / 110	Ate		2313101	[+] 23131 19.7		Luc		2355402	[–] 23554 17.2	Ø 255 mm PR 1KD
			Ate	epad	2313181	[+] 23131 19.7		Luc	epad	2355481	[–] 23554 17.2	Ø 255 mm PR 1KD
				PRO	92120703	ø 280 x 22 x 49.9		Bos		2456301	[–] 24563 17.7	Ø 272 mm PR 1KS
				PRO	92120705	ø 280 x 22 x 49.9			PRO	92120903	ø 255 x 10 x 51.6	PR 1KD

T - Z

		kW / hp										
JETTA IV (162, 163) 04/10→												
2.0 TDI	10/10→	766700 81 / 110		TPM0008				PRO	92224903	ø 272 x 10 x 48.3	PR 1KS
									TPM0008		
2.5	09/11→	766800 112 / 152	Ate	2358701	[+] 23587 20.3						
			Ate	2358781	[+] 23587 20.3						
			Ate	82076800							
				PRO 92120803	ø 288 x 25 x 49.8						
				PRO 92120805	ø 288 x 25 x 49.8						
				TPM0008							
2.5 FSI	04/10→	766900 125 / 170	Ate	2358701	[+] 23587 20.3		Luc		2355402	[–] 23554 17.2	2011-12→ PR 1KD
			Ate	2358781	[+] 23587 20.3		Luc		2355481	[–] 23554 17.2	2011-12→ PR 1KD
			Ate	82076800			Bos		2456301	[–] 24563 17.7	Ø 272 mm PR 1KS
				PRO 92120803	ø 288 x 25 x 49.8			PRO	92120903	ø 255 x 10 x 51.6	2011-12→ PR 1KD
				PRO 92120805	ø 288 x 25 x 49.8			PRO	92224903	ø 272 x 10 x 48.3	PR 1KS
				TPM0008					TPM0008		

JETTA IV Estate (1J5) 05/99→06/06 → GOLF IV Variant (1J5), Page 1219
JETTA IV Estate (1J6) 05/99→05/05 → BORA Estate (1J6), Page 1198
JETTA IV Kombi (1J6) 05/99→05/05 → BORA Estate (1J6), Page 1198
JETTA IV Variant (1J5) 05/99→06/06 → GOLF IV Variant (1J5), Page 1219
JETTA IV Wagon (1J6) 05/99→05/05 → BORA Estate (1J6), Page 1198
JETTA V / BORA III (1K2) 08/05→10/10 → JETTA III (1K2), Page 1231
JETTA V Combi (1K5) 06/07→07/09 → GOLF V Variant (1K5), Page 1222
JETTA V III (1K2) 08/05→10/10 → JETTA III (1K2), Page 1231
JETTA V Variant (1K5) 06/07→07/09 → GOLF V Variant (1K5), Page 1222
JETTA VI IV (162, 163) 04/10→ → JETTA IV (162, 163), Page 1232
JETTA VI Combi (AJ5) 07/09→07/13 → GOLF VI Variant (AJ5), Page 1226
JETTA VI Estate (AJ5) 07/09→07/13 → GOLF VI Variant (AJ5), Page 1226
JETTA VI Variant (AJ5) 07/09→07/13 → GOLF VI Variant (AJ5), Page 1226
JETTA VII SportWagon (BA5) 09/11→ → GOLF VII Estate (BA5), Page 1229

KAEFER 09/92→08/03											
1600	09/92→08/03	767000 36 / 49	Ate	2000906	[–] 20009 15			91007800	ø 230 x 40	
1600 i (Mexico)	10/92→07/03	34 / 46	Ate	82028300				97001500		
			Ate	82028800				94004700	ø 230,0 x 50	
				92010300	ø 278 x 9.5 x 83.8					

KEVER 09/92→08/03 → KAEFER, Page 1234
KOMBI / CARAVELLE V Bus (7HB, 7HJ, 7EB, 7EJ, 7EF) 04/03→11/09 → TRANSPORTER V Bus (7HB, 7HJ, 7EB, 7EJ, 7EF), Page 1282
KOMBI V Kasten (7HA, 7HH, 7EA, 7EH) 04/03→11/09 → TRANSPORTER V Box (7HA, 7HH, 7EA, 7EH), Page 1282

KOMBI Box (T2) 07/92→07/00											
1.6	08/92→07/99	767100 62 / 84	Luc	2012401	[–] 20124 19	Ø 260 mm ⊕ rim size 14" →70-T-199000 →12/95 Fist-type cal.	Luc	2322416	[+] 23224 17.3	Ø 280 mm ⊕ rim size 15" 70-T-200001→ 01/96→
			Luc	2147902	[–] 21479 19.2	Ø 282 mm solid disc Lucas ⊕ rim size 15" →70-X-250000 →04/99 Fist-type cal.	Luc	2344605	[+] 23446 16.5	Ø 294 mm ⊕ rim size 16" 05/97→
			Luc	2163501	[–] 21635 18.2	Ø 280 mm vented disc Lucas ⊕ rim size 15" →70-X-250000 →04/99 Frame saddle	Luc	82059600		
			Ate	2188302	[–] 21883 19.6	Ø 280 mm Teves vented disc ⊕ rim size 15" 70-T-200001→ →70-X-250000 01/96→ →04/99 Fist-type cal.	Luc	82063300		
								91044600	ø 268 x 56	→70-T-199000 →12/95
							Ben	97008500		→70-T-199000 →12/95
			Luc	2147903	[+] 21479 19.2	Ø 282 mm solid disc Lucas ⊕ rim size 15" 70-Y-000001→ 05/99→ Fist-type cal.	PRO	92083903	ø 280 x 12 x 40.3	⊕ rim size 15" 70-T-200001→ 01/96→

KOMBI Box (T2) 07/92→07/00

			kW / hp											
		767100		Ate		2188501	[+] 21885	20.6	Ø 280 mm vented disc Teves ⊕ rim size 15" 70-Y-000001→ 05/99→ Fist-type cal.		PRO	92098103	ø 294 x 13.5 x 41	⊕ rim size 16" 05/97→
1.6	08/92→07/99	62 / 84		Ate		2303401	[+] 23034	18.6	Ø 300 mm ⊕ rim size 16" 70-W-000001→ 05/97→			94012400	ø 268,0 x 68	→70-T-199000 →12/95
				Luc		2317602	[+] 23176	18.2	Ø 280 mm vented disc Lucas ⊕ rim size 15" 70-Y-000001→ 05/99→ Frame saddle					
				Luc		82032400			Lucas vented disc ⊕ rim size 15" →70-X-250000 →04/99					
				Ate		82062900			Teves					
				Ate		82076900			70-T-200001→ 01/96→ ⊕ rim size 15"					
				Ate		82503000			⊕ rim size 16"					
						92055900	ø 260 x 16 x 64.2		⊕ rim size 14" →70-T-199000 →12/95 Fist-type cal.					
						92058500	ø 282 x 18 x 64.7		⊕ rim size 15" →70-T-199000 →12/95 Fist-type cal.					
					PRO	92083703	ø 282 x 18 x 55.2		⊕ rim size 15" 70-T-200001→ 01/96→ Fist-type cal.					
						92056000	ø 280 x 24 x 64.7		⊕ rim size 15" →70-T-199000 →12/95 Frame saddle					
					PRO	92083803	ø 280 x 24 x 55.2		⊕ rim size 15" 70-T-200001→ 01/96→ Fist-type cal. Frame saddle					
					PRO	92109803	ø 300 x 26 x 56		⊕ rim size 16" 70-W-000001→ 05/97→					
		767200		Luc		2012401	[–] 20124	19	Ø 260 mm ⊕ rim size 14" →70-T-199000 →12/95 Fist-type cal.	Luc		2322416	[+] 23224	17.3	Ø 280 mm ⊕ rim size 15" 70-T-200001→ 01/96→
1.6	08/92→07/00	55 / 75								Luc		2344605	[+] 23446	16.5	Ø 294 mm ⊕ rim size 16" 05/97→
1.8	07/92→07/00	62 / 84		Luc		2147902	[–] 21479	19.2	Ø 282 mm solid disc Lucas ⊕ rim size 15" →70-X-250000 →04/99 Fist-type cal.	Luc		82059600		
1.9	07/92→07/00	68 / 92		Luc		2163501	[–] 21635	18.2	Ø 280 mm vented disc Lucas ⊕ rim size 15" →70-X-250000 →04/99 Frame saddle	Luc		82063300		
				Ate		2188302	[–] 21883	19.6	Ø 280 mm Teves vented disc ⊕ rim size 15" 70-T-200001→ →70-X-250000 01/96→ →04/99 Fist-type cal.			91044600	ø 268 x 56	→70-T-199000 →12/95
										Ben		97008500		→70-T-199000 →12/95
				Luc		2147903	[+] 21479	19.2	Ø 282 mm solid disc Lucas ⊕ rim size 15" 70-Y-000001→ 05/99→ Fist-type cal.		PRO	92083903	ø 280 x 12 x 40.3	⊕ rim size 15" 70-T-200001→ 01/96→
				Ate		2188501	[+] 21885	20.6	Ø 280 mm vented disc Teves ⊕ rim size 15" 70-Y-000001→ 05/99→ Fist-type cal.		PRO	92098103	ø 294 x 13.5 x 41	⊕ rim size 16" 05/97→
				Ate		2303401	[+] 23034	18.6	Ø 300 mm ⊕ rim size 16" 70-W-000001→ →70-1-000954 05/97→ →05/00			94012400	ø 268,0 x 68	→70-T-199000 →12/95
				Luc		2317602	[+] 23176	18.2	Ø 280 mm vented disc Lucas ⊕ rim size 15" 70-Y-000001→ 05/99→ Frame saddle					
				Ate		2326903	[+] 23269	20.1	Ø 313 mm ⊕ rim size 16" 70-1-000955→ 05/00→					
				Luc		82032400			Lucas vented disc ⊕ rim size 15" →70-X-250000 →04/99					
				Ate		82029300			⊕ rim size 16" 70-1-000955→ 05/00→					
				Ate		82062900			Teves					
				Ate		82076900			70-T-200001→ 01/96→ ⊕ rim size 15"					
				Ate		82503000			→70-1-000954 →05/00 ⊕ rim size 16"					
						92055900	ø 260 x 16 x 64.2		⊕ rim size 14" →70-T-199000 →12/95 Fist-type cal.					
						92058500	ø 282 x 18 x 64.7		⊕ rim size 15" →70-T-199000 →12/95 Fist-type cal.					
					PRO	92083703	ø 282 x 18 x 55.2		⊕ rim size 15" 70-T-200001→ 01/96→ Fist-type cal.					
						92056000	ø 280 x 24 x 64.7		⊕ rim size 15" →70-T-199000 →12/95 Frame saddle					
						92109900	ø 313 x 26 x 56.2		⊕ rim size 16" 70-1-000955→ 05/00→					
					PRO	92083803	ø 280 x 24 x 55.2		⊕ rim size 15" 70-T-200001→ 01/96→ Fist-type cal. Frame saddle					
					PRO	92109803	ø 300 x 26 x 56		⊕ rim size 16" 70-W-000001→ →70-1-000954 05/97→ →05/00					
					PRO	92109903	ø 313 x 26 x 56.2		⊕ rim size 16" 70-1-000955→ 05/00→					

T - Z

KOMBI Bus (T2) 07/92→07/00

		kW / hp
		767300
1.6	07/92→07/00	64 / 87
1.9	07/92→07/00	68 / 92
1.9 Hybrid	07/92→07/00	69 / 94

Luc		2012401	[–]	20124	19	Ø 260 mm ⊕ rim size 14" →70-T-199000 →12/95 Fist-type cal.	Luc		2322416	[+] 23224	17.3	Ø 280 mm ⊕ rim size 15" 70-T-200001→ 01/96→
Luc		2147902	[–]	21479	19.2	Ø 282 mm solid disc Lucas ⊕ rim size 15" →70-X-250000 →04/99 Fist-type cal.	Luc		2344605	[+] 23446	16.5	Ø 294 mm ⊕ rim size 16" 05/97→
Luc		2163501	[–]	21635	18.2	Ø 280 mm vented disc Lucas ⊕ rim size 15" →70-X-250000 →04/99 Frame saddle	Luc		82059600			
Ate		2188302	[–]	21883	19.6	Ø 280 mm Teves vented disc ⊕ rim size 15" 70-T-200001→ →70-X-250000 01/96→ →04/99 Fist-type cal.	Luc		82063300			
									91044600	ø 268 x 56		→70-T-199000 →12/95
							Ben		97008500			→70-T-199000 →12/95
Luc		2147903	[+]	21479	19.2	Ø 282 mm solid disc Lucas ⊕ rim size 15" 70-Y-000001→ 05/99→ Fist-type cal.		PRO	92083903	ø 280 x 12 x 40.3		⊕ rim size 15" 70-T-200001→ 01/96→
Ate		2188501	[+]	21885	20.6	Ø 280 mm vented disc Teves ⊕ rim size 15" 70-Y-000001→ 05/99→ Fist-type cal.		PRO	92098103	ø 294 x 13.5 x 41		⊕ rim size 16" 05/97→
Ate		2303401	[+]	23034	18.6	Ø 300 mm ⊕ rim size 16" 70-W-000001→ →70-1-000954 05/97→ →05/00			94012400	ø 268,0 x 68		→70-T-199000 →12/95
Luc		2317602	[+]	23176	18.2	Ø 280 mm vented disc Lucas ⊕ rim size 15" 70-Y-000001→ 05/99→ Frame saddle						
Ate		2326903	[+]	23269	20.1	Ø 313 mm ⊕ rim size 16" 70-1-000955→ 05/00→						
Luc		82032400				Lucas vented disc ⊕ rim size 15" →70-X-250000 →04/99						
Ate		82029300				⊕ rim size 16" 70-1-000955→ 05/00→						
Ate		82062900				Teves						
Ate		82076900				70-T-200001→ 01/96→ ⊕ rim size 15"						
Ate		82503000				→70-1-000954 →05/00 ⊕ rim size 16"						
		92055900	ø 260 x 16 x 64.2			⊕ rim size 14" →70-T-199000 →12/95 Fist-type cal.						
		92058500	ø 282 x 18 x 64.7			⊕ rim size 15" →70-T-199000 →12/95 Fist-type cal.						
	PRO	92083703	ø 282 x 18 x 55.2			⊕ rim size 15" 70-T-200001→ 01/96→ Fist-type cal.						
		92056000	ø 280 x 24 x 64.7			⊕ rim size 15" →70-T-199000 →12/95 Frame saddle						
		92109900	ø 313 x 26 x 56.2			⊕ rim size 16" 70-1-000955→ 05/00→						
	PRO	92083803	ø 280 x 24 x 55.2			⊕ rim size 15" 70-T-200001→ 01/96→ Fist-type cal. Frame saddle						
	PRO	92109803	ø 300 x 26 x 56			⊕ rim size 16" 70-W-000001→ →70-1-000954 05/97→ →05/00						
	PRO	92109903	ø 313 x 26 x 56.2			⊕ rim size 16" 70-1-000955→ 05/00→						

KOMBI Kasten (T2) 07/92→07/00 → KOMBI Box (T2), Page 1234

LT 28-35 II Bus (2DB, 2DE, 2DK) 05/96→07/06

		767400	Ate		2399002	[+] 23990	20.7		Bos		2302101	[o] 23021	18.9	⊕ LT 35 2D-X-002120→ →2D-2-008000
2.3	05/96→07/06	105 / 143							Ate		2390101	[+] 23901	18.8	⊕ LT 35 →2D-X-002119 2D-2-000001→
2.5 SDI	07/96→07/06	55 / 75			98018200	L210			Ate		2473901	[+] 24739	17.3	⊕ LT 28
2.5 TDI	05/96→08/99	75 / 102	Ate		82058400						98018200	L210		
2.5 TDI	05/99→07/06	66 / 90	Ate		82062900									
2.5 TDI	05/99→07/06	80 / 109		PRO	92131503	ø 276 x 22 x 77			Bos		82061400			⊕ LT 35 Bosch
2.5 TDI	05/01→07/06	61 / 83							Ate		82057400			⊕ LT 28
2.5 TDI	05/01→07/06	70 / 95							Ate		82058400			⊕ LT 35
2.8 TDI	01/99→01/02	96 / 131							Ate		82062900			Teves
2.8 TDI	05/01→06/06	116 / 158								PRO	92137503	ø 258 x 12 x 96.5		⊕ LT 28
										PRO	92137603	ø 272 x 16 x 96.7		⊕ LT 35
											91055100	ø 160 x 40		
											97012300			

LT 28-46 II Box (2DA, 2DD, 2DH) 05/96→07/06

		767500	Per		2915301	[o] 29153	20	⊕ LT 46	Bos		2302101	[o] 23021	18.9	⊕ LT 35 2D-X-002120→ →2D-2-008000
2.3	05/96→07/06	105 / 143												

		kW / hp											
LT 28-46 II Box (2DA, 2DD, 2DH) 05/96→07/06													
2.5 SDI	09/96→07/06	55 / 75	Ate		2399002	[+] 23990 20.7	⊕ LT 28/LT 35	Per		2915301	[o] 29153 20	⊕ LT 46
2.5 TDI	05/96→08/99	75 / 102										
2.5 TDI	05/99→07/06	66 / 90			98018200	L210	⊕ LT 28/LT 35	Ate		2390101	[+] 23901 18.8	⊕ LT 35 →2D-X-002119 2D-2-000001→
2.5 TDI	05/99→07/06	80 / 109										
2.5 TDI	05/01→07/06	61 / 83			98031700	L189	⊕ LT46	Ate		2473901	[+] 24739 17.3	⊕ LT 28
2.5 TDI	05/01→07/06	70 / 95										
2.8 TDI	01/99→07/06	96 / 130	Per		82059000		⊕ LT 46			98018200	L210	⊕ LT 28/LT 35
2.8 TDI	04/02→07/06	116 / 158										
			Ate		82058400		⊕ LT 28/LT 35			98031700	L189	⊕ LT46
			Ate		82062900		⊕ LT 28/LT 35	Per		82059000		⊕ LT 46
					82075000		⊕ LT 46	Bos		82061400		⊕ LT 35 Bosch
				PRO	92131503	ø 276 x 22 x 77		Ate		82057400		⊕ LT 28
								Ate		82058400		⊕ LT 35
								Ate		82062900		⊕ LT 28/LT 35 Teves
										82075000		⊕ LT 46
									PRO	92137503	ø 258 x 12 x 96.5	⊕ LT 28
									PRO	92137603	ø 272 x 16 x 96.7	⊕ LT 35
									PRO	92089803	ø 285 x 22 x 93	⊕ LT 46
										91055100	ø 160 x 40	⊕ LT 28/LT 35
										91057900	ø 170 x 40	⊕ LT 46
										97012300		⊕ LT 28/LT 35
										97012400		⊕ LT 46

LT 28-46 II Kasten (2DA, 2DD, 2DH) 05/96→07/06 → LT 28-46 II Box (2DA, 2DD, 2DH), Page 1236

LT 28-46 II Platform/Chassis (2DC, 2DF, 2DG, 2DL, 2DM) 06/96→07/06

		767600	Per		2915301	[o] 29153 20	⊕ LT 46	Bos		2302101	[o] 23021 18.9	⊕ LT 35 2D-X-002120→ →2D-2-008000
2.3	06/96→07/06	105 / 143										
2.5 SDI	09/96→07/06	55 / 75	Ate		2399002	[+] 23990 20.7	⊕ LT 28/LT 35	Per		2915301	[o] 29153 20	⊕ LT 46
2.5 TDI	06/96→08/99	75 / 102										
2.5 TDI	05/99→07/06	66 / 90			98018200	L210	⊕ LT 28/LT 35	Ate		2390101	[+] 23901 18.8	⊕ LT 35 →2D-X-002119 2D-2-000001→
2.5 TDI	05/99→07/06	80 / 109										
2.5 TDI	05/01→07/06	61 / 83			98031700	L189	⊕ LT46	Ate		2473901	[+] 24739 17.3	⊕ LT 28
2.5 TDI	05/01→07/06	70 / 95										
2.8 TDI	01/99→07/06	96 / 130	Per		82059000		⊕ LT 46			98018200	L210	⊕ LT 28/LT 35
2.8 TDI	04/02→07/06	116 / 158										
			Ate		82058400		⊕ LT 28/LT 35			98031700	L189	⊕ LT46
			Ate		82062900		⊕ LT 28/LT 35	Per		82059000		⊕ LT 46
					82075000		⊕ LT 46	Bos		82061400		⊕ LT 35 Bosch
				PRO	92131503	ø 276 x 22 x 77		Ate		82057400		⊕ LT 28
								Ate		82058400		⊕ LT 35
								Ate		82062900		⊕ LT 28/LT 35 Teves
										82075000		⊕ LT 46
									PRO	92137503	ø 258 x 12 x 96.5	⊕ LT 28
									PRO	92137603	ø 272 x 16 x 96.7	⊕ LT 35
									PRO	92089803	ø 285 x 22 x 93	⊕ LT 46
										91055100	ø 160 x 40	⊕ LT 28/LT 35
										91057900	ø 170 x 40	⊕ LT 46
										97012300		⊕ LT 28/LT 35
										97012400		⊕ LT 46

LT 28-46 II Pritsche/Fahrgestell (2DC, 2DF, 2DG, 2DL, 2DM) 06/96→07/06 → LT 28-46 II Platform/Chassis (2DC, 2DF, 2DG, 2DL, 2DM), Page 1237

LT Mk II Box (2DA, 2DD, 2DH) 05/96→07/06 → LT 28-46 II Box (2DA, 2DD, 2DH), Page 1236

T - Z

		kW / hp											
LT Mk II Bus (2DB, 2DE, 2DK) 05/96→07/06 → LT 28-35 II Bus (2DB, 2DE, 2DK), Page 1236													
LT Mk II Kasten (2DA, 2DD, 2DH) 05/96→07/06 → LT 28-46 II Box (2DA, 2DD, 2DH), Page 1236													
LT Mk II Platform/Chassis (2DC, 2DF, 2DG, 2DL, 2DM) 06/96→07/06 → LT 28-46 II Platform/Chassis (2DC, 2DF, 2DG, 2DL, 2DM), Page 1237													
LT Mk II Pritsche/Fahrgestell (2DC, 2DF, 2DG, 2DL, 2DM) 06/96→07/06 → LT 28-46 II Platform/Chassis (2DC, 2DF, 2DG, 2DL, 2DM), Page 1237													
LUPO (5Z1) 01/04→12/09													
767700			Ate		**2313001**	[–] 23130 19.7				**91044700**	ø 200 x 40	
1.6	01/04→12/09	74 / 101	Ate	epad	**2313081**	[–] 23130 19.7		Ate		**97006500**		
			Ate		**82062900**					**84044706**	bore ø 17.5 ø 200 x 40	
				PRO	**92082203**	ø 256 x 22 x 36.5				**94023800**	ø 200,0 x 50.5	
					TPM0008							
LUPO (6X1, 6E1) 09/98→07/05													
767800			VW		**2186602**	[–] 21866 17.2				**91018200**	ø 180 x 31	⊖ ABS →6X-X-003000
1.0	09/98→07/05	37 / 50										
1.4 16V	09/98→07/05	55 / 75	Ate		**82062900**					**91044700**	ø 200 x 40	⊕ ABS ⊖ ABS 6X-X-003001→
				PRO	**92072003**	ø 239 x 18 x 34.1		Ate		**97000500**		⊖ ABS →6X-X-003000
					TPM0008			Ate		**97006500**		⊕ ABS ⊖ ABS 6X-X-003001→
										84018202	bore ø 15.9 ø 180 x 31	⊖ ABS →6X-X-003000
										84044705	bore ø 15.9 ø 200 x 40	⊖ ABS 6X-X-003001→
										84044706	bore ø 17.5 ø 200 x 40	⊕ ABS
										84044708	bore ø 15.9 ø 200 x 40	⊖ ABS
										94022700	ø 180,0 x 41	⊖ ABS →6X-X-003000
										94022800	ø 200,0 x 50.5	⊕ ABS ⊖ ABS 6X-X-003001→
767900			VW		**2186602**	[–] 21866 17.2				**91018200**	ø 180 x 31	⊖ ABS →6X-X-003000
1.0	10/98→05/00	37 / 50										
			Ate		**82062900**					**91044700**	ø 200 x 40	⊕ ABS ⊖ ABS 6X-X-003001→
				PRO	**92072003**	ø 239 x 18 x 34.1		Ate		**97000500**		⊖ ABS →6X-X-003000
					TPM0008			Ate		**97006500**		⊕ ABS ⊖ ABS 6X-X-003001→
										84018202	bore ø 15.9 ø 180 x 31	⊖ ABS →6X-X-003000
										84044705	bore ø 15.9 ø 200 x 40	⊖ ABS 6X-X-003001→
										94022700	ø 180,0 x 41	⊖ ABS →6X-X-003000
										94022800	ø 200,0 x 50.5	⊕ ABS ⊖ ABS 6X-X-003001→
768000			Ate		**2339402**	[–] 23394 14.5						
1.2 TDI 3L	07/99→07/05	45 / 61	Ate		**82062900**							
				PRO	**92106403**	ø 239 x 15 x 34.2						
					TPM0008							
768100			VW		**2186602**	[–] 21866 17.2				**91018200**	ø 180 x 31	⊖ ABS →6X-X-003000
1.4	10/00→07/05	44 / 60	Ate		**82062900**					**91044700**	ø 200 x 40	⊕ ABS ⊖ ABS 6X-X-003001→
				PRO	**92072003**	ø 239 x 18 x 34.1		Ate		**97000500**		⊖ ABS →6X-X-003000
					TPM0008			Ate		**97006500**		⊕ ABS ⊖ ABS 6X-X-003001→
										84044705	bore ø 15.9 ø 200 x 40	⊖ ABS 6X-X-003001→
										84044706	bore ø 17.5 ø 200 x 40	⊕ ABS
										84044708	bore ø 15.9 ø 200 x 40	⊖ ABS
										94022700	ø 180,0 x 41	⊖ ABS →6X-X-003000

T - Z

30 kW / hp

LUPO (6X1, 6E1) 09/98→07/05

768100													
1.4	10/00→07/05	44 / 60								94022800	ø 200,0 x 50.5	⊕ ABS ⊖ ABS 6X-X-003001→
768200													
1.4 16V	08/99→07/05	74 / 100	Luc		2194502	[–] 21945 16.2		Luc		2355402	[–] 23554 17.2	
1.4 FSI	02/01→07/05	77 / 105	Luc		82062800			Luc		2355481	[–] 23554 17.2	
1.4 TDI	01/99→07/05	55 / 75		PRO	92036803	ø 256 x 20 x 38.7		Luc		82037300		
					TPM0008			Luc		82063300		
									PRO	92098203	ø 232 x 9 x 39.4	
										TPM0008		
768300			Luc		2194502	[–] 21945 16.2		Luc		2355402	[–] 23554 17.2	
1.6 GTI	09/00→07/05	92 / 125	Luc		82062800			Luc		2355481	[–] 23554 17.2	
					92128300	ø 256 x 25 x 39.5		Luc		82037300		
					TPM0008			Luc		82063300		
									PRO	92098203	ø 232 x 9 x 39.4	
										TPM0008		
768400			VW		2186602	[–] 21866 17.2				91018200	ø 180 x 31	⊖ ABS →6X-X-003000
1.7 SDI	09/98→07/05	44 / 60	Ate		82062900					91044700	ø 200 x 40	⊕ ABS ⊖ ABS 6X-X-003001→
				PRO	92072003	ø 239 x 18 x 34.1		Ate		97000500		⊖ ABS →6X-X-003000
					TPM0008			Ate		97006500		⊕ ABS ⊖ ABS 6X-X-003001→
										84018202	bore ø 15.9 ø 180 x 31	⊖ ABS →6X-X-003000
										84044705	bore ø 15.9 ø 200 x 40	⊖ ABS 6X-X-003001→
										84044706	bore ø 17.5 ø 200 x 40	⊕ ABS
										94022700	ø 180,0 x 41	⊖ ABS →6X-X-003000
										94022800	ø 200,0 x 50.5	⊕ ABS ⊖ ABS 6X-X-003001→

MULTIVAN V (7HM, 7HN, 7HF, 7EF, 7EM, 7EN) 04/03→11/09

768500			Ate		2374702	[–] 23747 20.1	PR 2E3+K4A,K4B Ø 308 mm	Luc		2332601	[–] 23326 17.7	
1.9 TDI	04/03→11/09	63 / 85										
2.0 TDI	05/10→	100 / 136	Ate		2374602	[+] 23746 20.1	PR 2E3+K4H,K4J,K4L Ø 308 mm	Luc		2332681	[–] 23326 17.7	
2.0 TDI 4motion	05/10→	100 / 136										
2.0 TSI	05/11→	150 / 204	Ate		2462301	[+] 24623 18.1	PR 2E4 Ø 340 mm	Luc		2332602	[+] 23326 17.7	
2.0 TSI	07/12→	110 / 150										
2.0 TSI 4motion	07/11→	150 / 204	Ate		82076900		PR 2E3 Ø 308 mm	Luc		82054900		
				PRO	92121203	ø 308 x 29.5 x 55.6	PR 2E3		PRO	92121403	ø 294 x 22 x 44.3	
				PRO	92230303	ø 340 x 32.2 x 55.4	PR 2E4					
768600			Ate		2374702	[–] 23747 20.1	⊕ rim size 16" Ø 308 mm	Luc		2332601	[–] 23326 17.7	Ø 294 mm
1.9 TDI	04/03→11/09	77 / 105										
1.9 TDI	06/06→11/09	75 / 102	Ate		2374602	[+] 23746 20.1	⊕ rim size 16" Ø 308 mm	Luc		2332681	[–] 23326 17.7	Ø 294 mm
2.0	11/03→	85 / 115										
			Ate		82062900			Luc		2332602	[+] 23326 17.7	Ø 294 mm
			Ate		82076900		Ø 308 mm	Luc		82054900		Ø 294 mm
				PRO	92121203	ø 308 x 29.5 x 55.6	⊕ rim size 16"	Ate		82062900		
								Luc		82063500		
									PRO	92121403	ø 294 x 22 x 44.3	
										91058700	ø 185 x 30	⊕ rim size 16" PR 0WR
										97032200		⊕ rim size 16" PR 0WR
768700			Ate		2374701	[–] 23747 18	⊕ rim size 17" PR 2E4 Ø 333 mm	Luc		2332601	[–] 23326 17.7	PR 2E3,2E4 Ø 294 mm
1.9 TDI	01/06→11/09	62 / 84										
2.5 TDI	11/03→11/09	120 / 163	Ate		2374702	[–] 23747 20.1	⊕ rim size 16" PR 2E3 Ø 308 mm	Luc		2332681	[–] 23326 17.7	PR 2E3,2E4 Ø 294 mm

T - Z

MULTIVAN V (7HM, 7HN, 7HF, 7EF, 7EM, 7EN) 04/03→11/09

768700													
1.9 TDI	01/06→11/09	62 / 84	Ate		2374601	[+] 23746 18	⊕ rim size 17" PR 2E4 Ø 333 mm	Ate		2436801	[+] 24368 19	⊕ rim size 16" PR OWR Ø 314 mm
2.5 TDI	11/03→11/09	120 / 163	Ate		2374602	[+] 23746 20.1	⊕ rim size 16" PR 2E3 Ø 308 mm	Luc		2332602	[+] 23326 17.7	PR 2E3,2E4 Ø 294 mm
			Ate		82062900			Luc		82054900		PR 2E3,2E4 Ø 294 mm
			Ate		82076900		PR 2E3 Ø 308 mm	Ate		82062900		
			Ate		82077000		⊕ rim size 17" PR 2E4 Ø 333 mm	Luc		82063500		
				PRO	92121203	ø 308 x 29.5 x 55.6	⊕ rim size 16" PR 2E3	Ate		82077100		⊕ rim size 16" PR OWR Ø 314 mm
				PRO	92121303	ø 333 x 32.5 x 55.9	⊕ rim size 17" PR 2E4		PRO	92121403	ø 294 x 22 x 44.3	PR 2E3,2E4
									PRO	92121903	ø 314 x 22 x 75.9	⊕ rim size 16" PR OWR
										91058700	ø 185 x 30	⊕ rim size 16" PR OWR
										97032200		⊕ rim size 16" PR OWR
768800													
2.0 BiTDI	09/09→	132 / 180	Ate		2462301	[+] 24623 18.1	PR 2E4 Ø 340 mm	Luc		2332601	[–] 23326 17.7	
2.0 BiTDI 4motion	09/09→	132 / 180		PRO	92230303	ø 340 x 32.2 x 55.4	PR 2E4	Luc	epad	2332681	[–] 23326 17.7	
								Luc		2332602	[+] 23326 17.7	
								Luc		82054900		
									PRO	92121403	ø 294 x 22 x 44.3	
768900													
2.0 TDI	09/09→	62 / 84	Ate		2374702	[–] 23747 20.1	Ø 308 mm	Luc		2332601	[–] 23326 17.7	
2.0 TDI	09/09→	75 / 102	Ate		2374602	[+] 23746 20.1	Ø 308 mm	Luc	epad	2332681	[–] 23326 17.7	
2.0 TDI	05/11→	84 / 114	Ate		82076900		Ø 308 mm	Luc		2332602	[+] 23326 17.7	
				PRO	92121203	ø 308 x 29.5 x 55.6		Luc		82054900		
									PRO	92121403	ø 294 x 22 x 44.3	
769000													
2.0 TDI	09/09→	103 / 140	Ate		2374702	[–] 23747 20.1	PR 2E3 Ø 308 mm	Luc		2332601	[–] 23326 17.7	
2.0 TDI 4motion	09/09→	103 / 140	Ate		2374602	[+] 23746 20.1	PR 2E3 Ø 308 mm	Luc	epad	2332681	[–] 23326 17.7	
			Ate		2462301	[+] 24623 18.1	PR 2E4 Ø 340 mm	Luc		2332602	[+] 23326 17.7	
			Ate		82076900		PR 2E3 Ø 308 mm	Luc		82054900		
				PRO	92121203	ø 308 x 29.5 x 55.6	PR 2E3		PRO	92121403	ø 294 x 22 x 44.3	
				PRO	92230303	ø 340 x 32.2 x 55.4	PR 2E4					
769100													
2.5 TDI	04/03→11/09	96 / 130	Ate		2374702	[–] 23747 20.1	⊕ rim size 16" Ø 308 mm	Luc		2332601	[–] 23326 17.7	PR 2E3,2E4 Ø 294 mm
			Ate		2374602	[+] 23746 20.1	⊕ rim size 16" Ø 308 mm	Luc	epad	2332681	[–] 23326 17.7	PR 2E3,2E4 Ø 294 mm
			Ate		82062900			Luc		2332602	[+] 23326 17.7	PR 2E3,2E4 Ø 294 mm PR OWL,OWM,OWN,OWP
			Ate		82076900		Ø 308 mm	Luc		82054900		Ø 294 mm
				PRO	92121203	ø 308 x 29.5 x 55.6	⊕ rim size 16"	Ate		82062900		
								Luc		82063500		
									PRO	92121403	ø 294 x 22 x 44.3	
										91058700	ø 185 x 30	⊕ rim size 16" PR OWR
										97032200		⊕ rim size 16" PR OWR
769200													
2.5 TDI	04/03→11/09	128 / 174	Ate		2374701	[–] 23747 18	⊕ rim size 17" PR 2E4 Ø 333 mm	Luc		2332601	[–] 23326 17.7	PR 2E3,2E4 Ø 294 mm
2.5 TDI 4motion	07/04→11/09	128 / 174	Ate		2374702	[–] 23747 20.1	⊕ rim size 16" PR 2E3 Ø 308 mm	Luc	epad	2332681	[–] 23326 17.7	PR 2E3,2E4 Ø 294 mm
			Ate		2374601	[+] 23746 18	⊕ rim size 17" PR 2E4 Ø 333 mm	Ate		2436801	[+] 24368 19	⊕ rim size 16" PR OWR Ø 314 mm
			Ate		2374602	[+] 23746 20.1	⊕ rim size 16" PR 2E3 Ø 308 mm	Luc		2332602	[+] 23326 17.7	PR 2E3,2E4,OWQ Ø 294 mm PR OWL,OWM,OWN,OWP
			Ate		82076900		PR 2E3 Ø 308 mm	Luc		82054900		PR 2E3,2E4,OWQ Ø 294 mm PR OWL,OWM,OWN,OWP

T - Z

		kW / hp										
MULTIVAN V (7HM, 7HN, 7HF, 7EF, 7EM, 7EN) 04/03→11/09												
		769200	Ate		82077000		⊕ rim size 17" PR 2E4 Ø 333 mm	Luc		82063500		
2.5 TDI	04/03→11/09	128 / 174										
2.5 TDI 4motion	07/04→11/09	128 / 174		PRO	92121203	ø 308 x 29.5 x 55.6	⊕ rim size 16" PR 2E3	Ate		82077100		⊕ rim size 16" PR OWR Ø 314 mm
				PRO	92121303	ø 333 x 32.5 x 55.9	⊕ rim size 17" PR 2E4		PRO	92121403	ø 294 x 22 x 44.3	PR 2E3,2E4,0WQ PR 0WL,0WM,0WN,0WP
									PRO	92121903	ø 314 x 22 x 75.9	⊕ rim size 16" PR OWR
										91058700	ø 185 x 30	⊕ rim size 16" PR OWR
										97032200		⊕ rim size 16" PR OWR
		769300	Ate		2374702	[–] 23747 20.1	⊕ rim size 16" Ø 308 mm	Luc		2332601	[–] 23326 17.7	PR 2E3,2E4 Ø 294 mm
2.5 TDI 4motion	07/04→11/09	96 / 130	Ate	epad	2374602	[+] 23746 20.1	⊕ rim size 16" Ø 308 mm	Luc	epad	2332681	[–] 23326 17.7	PR 2E3,2E4 Ø 294 mm
			Ate		82062900			Luc		2332602	[+] 23326 17.7	PR 2E3,2E4,0WQ Ø 294 mm PR 0WL,0WM,0WN,0WP
			Ate		82076900		Ø 308 mm	Luc		82054900		Ø 294 mm
				PRO	92121203	ø 308 x 29.5 x 55.6	⊕ rim size 16"	Ate		82062900		
								Luc		82063500		
									PRO	92121403	ø 294 x 22 x 44.3	
										91058700	ø 185 x 30	⊕ rim size 16" PR OWR
										97032200		⊕ rim size 16" PR OWR
		769400	Ate		2374701	[–] 23747 18	⊕ rim size 17" Ø 333 mm	Luc		2332602	[+] 23326 17.7	Ø 294 mm
3.2 V6	02/04→06/04	170 / 231	Ate	epad	2374601	[+] 23746 18	⊕ rim size 17" Ø 333 mm	Luc		82054900		Ø 294 mm
			Ate		82062900			Ate		82062900		
			Ate		82077000		⊕ rim size 17" Ø 333 mm	Luc		82063500		
				PRO	92121303	ø 333 x 32.5 x 55.9	⊕ rim size 17"		PRO	92121403	ø 294 x 22 x 44.3	
										91058700	ø 185 x 30	⊕ rim size 16" PR OWR
										97032200		⊕ rim size 16" PR OWR
		769500	Ate		2374701	[–] 23747 18	⊕ rim size 17" Ø 333 mm	Luc		2332601	[–] 23326 17.7	PR 2E3,2E4 Ø 294 mm
3.2 V6	02/04→11/09	173 / 235	Ate	epad	2374601	[+] 23746 18	⊕ rim size 17" Ø 333 mm	Luc	epad	2332681	[–] 23326 17.7	PR 2E3,2E4 Ø 294 mm
3.2 V6 4motion	07/04→11/09	173 / 235	Ate		82062900			Luc		2332602	[+] 23326 17.7	PR 2E3,2E4,0WQ Ø 294 mm PR 0WL,0WM,0WN,0WP
			Ate		82077000		⊕ rim size 17" Ø 333 mm	Luc		82054900		Ø 294 mm
				PRO	92121303	ø 333 x 32.5 x 55.9	⊕ rim size 17"	Ate		82062900		
								Luc		82063500		
									PRO	92121403	ø 294 x 22 x 44.3	
										91058700	ø 185 x 30	⊕ rim size 16" PR OWR
										97032200		⊕ rim size 16" PR OWR
MULTIVAN Mk V (7HM, 7HN, 7HF, 7EF, 7EM, 7EN) 04/03→11/09 **→ MULTIVAN V (7HM, 7HN, 7HF, 7EF, 7EM, 7EN), Page 1239**												
MULTIVAN T5 (7HM, 7HN, 7HF, 7EF, 7EM, 7EN) 04/03→11/09 **→ MULTIVAN V (7HM, 7HN, 7HF, 7EF, 7EM, 7EN), Page 1239**												
NEW BEETLE (9C1, 1C1) 01/98→09/10												
		769600	Ate		2313101	[+] 23131 19.7		Luc		2355402	[–] 23554 17.2	
1.4	11/01→09/10	55 / 75										
1.6	10/99→09/00	74 / 100										
1.6	06/00→09/10	75 / 102	Ate	epad	2313181	[+] 23131 19.7		Luc	epad	2355481	[–] 23554 17.2	
1.9 TDI	02/01→09/10	74 / 101										
1.9 TDI	07/05→09/10	77 / 105	Ate		82062900			Luc		82037300		
				PRO	92082303	ø 280 x 22 x 36.5		Luc		82063300		
					TPM0008				PRO	92082503	ø 232 x 9 x 39.3	
										TPM0008		

		kW / hp											
NEW BEETLE (9C1, 1C1) 01/98→09/10													
		769700	Ate		2339201	[+] 23392 20.6		Luc		2355402	[–] 23554 17.2	
1.8 T	10/99→09/10	110 / 150										
1.8 T	11/01→06/05	132 / 180	Ate		82029300			Luc	epad	2355481	[–] 23554 17.2	
2.5	07/05→09/10	110 / 150										
			Ate		82062900			Luc		82037300		
				PRO	92106603	ø 288 x 25 x 34.4		Luc		82063300		
					TPM0008				PRO	92082503	ø 232 x 9 x 39.3	
										TPM0008		
		769800	Ate		2313001	[–] 23130 19.7	→05/99 →1C·X·499000 →9C·X·999000	Luc		2355402	[–] 23554 17.2	
1.9 TDI	01/98→06/04	66 / 90										
2.0	01/98→09/10	85 / 115	Ate	epad	2313081	[–] 23130 19.7	→05/99 →1C·X·499000 →9C·X·999000	Luc	epad	2355481	[–] 23554 17.2	
			Ate		2313101	[+] 23131 19.7	06/99→ 9C·Y·600001→	Luc		82037300		
			Ate	epad	2313181	[+] 23131 19.7	06/99→ 9C·Y·600001→	Luc		82063300		
			Ate		82062900				PRO	92082503	ø 232 x 9 x 39.3	
				PRO	92082303	ø 280 x 22 x 36.5				TPM0008		
					TPM0008							
		769900	Ate		2339201	[+] 23392 20.6		Luc		2355402	[–] 23554 17.2	
2.3 V5	10/00→09/10	125 / 170										
RSI 3.2 4motion (1C9)	04/00→05/01	165 / 224	Ate		82029300			Luc	epad	2355481	[–] 23554 17.2	
			Ate		82062900			Luc		82502100		
				PRO	92098503	ø 312 x 25 x 34		Luc		82063300		
					TPM0008				PRO	92098603	ø 256 x 22 x 36.7	
										TPM0008		
NEW BEETLE Cabriolet (1Y7) 09/02→10/10 → NEW BEETLE Convertible (1Y7), Page 1242													
NEW BEETLE Convertible (1Y7) 09/02→10/10													
		770000	Ate		2313101	[+] 23131 19.7		Luc		2355402	[–] 23554 17.2	
1.4	01/03→09/10	55 / 75										
1.6	01/03→09/10	75 / 102	Ate	epad	2313181	[+] 23131 19.7		Luc	epad	2355481	[–] 23554 17.2	
1.9 TDI	06/03→09/10	74 / 100										
1.9 TDI	07/05→09/10	77 / 105										
2.0	09/02→10/10	85 / 115	Ate		82062900			Luc		82037300		
				PRO	92082303	ø 280 x 22 x 36.5		Luc		82063300		
					TPM0008				PRO	92082503	ø 232 x 9 x 39.3	
										TPM0008		
		770100	Ate		2339201	[+] 23392 20.6		Luc		2355402	[–] 23554 17.2	
1.8 T	01/03→09/10	110 / 150										
2.5	07/05→09/10	110 / 150	Ate		82029300			Luc	epad	2355481	[–] 23554 17.2	
			Ate		82062900			Luc		82037300		
				PRO	92106603	ø 288 x 25 x 34.4		Luc		82063300		
					TPM0008				PRO	92082503	ø 232 x 9 x 39.3	
										TPM0008		
NOVO FUSCA (5C1) 04/11→ → BEETLE (5C1), Page 1196													
NOVO FUSCA (9C1, 1C1) 01/98→09/10 → NEW BEETLE (9C1, 1C1), Page 1241													
PANEL II Box (9K9A) 11/95→01/04 → CADDY II Box (9K9A), Page 1200													
PANEL II Kasten (9K9A) 11/95→01/04 → CADDY II Box (9K9A), Page 1200													
PARATI 08/96→07/02													
		770200	Var		2354601	[–] 23546 16	Varga					
1.4	08/96→07/02	62 / 84										
1.6	08/96→07/02	74 / 101	Ate		2196202	[–] 21962 15	Teves					
PARATI 08/02→													
		770300	Var		2354601	[–] 23546 16	Varga					
1.0	08/02→	56 / 76										
1.6	08/02→07/05	73 / 99										

T - Z

		kW / hp												
PARATI 08/02→														
1.6	07/03→07/05	68 / 92	Ate		2196202	[–] 21962 15	Teves							
1.6	09/03→	67 / 91												
1.8	08/02→	73 / 99												
1.9 D	08/02→	47 / 64												
1.9 SDI	08/02→	47 / 64												
2.0	07/03→	82 / 112												
		770400	Var		2354601	[–] 23546 16	Varga							
1.0	08/02→	82 / 112	Ate		2196202	[–] 21962 15	Teves							
					TPM0008									
PARATI 11/06→														
		770500	Var		2354601	[–] 23546 16	Varga							
1.6 Total Flex	11/06→	71 / 97	Ate		2196202	[–] 21962 15	Teves							
PASSAT (3B2) 08/96→12/01														
		770600	Luc		2194503	[–] 21945 19.6	→3B-X-600000	Luc		2355402	[–] 23554 17.2	
1.6	10/96→11/00	74 / 101	Ate		2193801	[+] 21938 20.4	⊕J	Luc	epad	2355481	[–] 23554 17.2	
			Ate	epad	2193881	[+] 21938 20.4	⊕J	Luc		82037300		
			Luc		2194504	[+] 21945 19.6	3B-Y-000001→	Luc		82062800		
			Ate		2301802	[+] 23018 20.4			PRO	92057503	ø 245 x 10 x 63.9	
			Ate	epad	2301881	[+] 23018 20.4						
			Ate		82029300							
			Luc		82062800							
			Ate		82062900							
				PRO	92057603	ø 288 x 25 x 46.2						
				PRO	92057605	ø 288 x 25 x 46.2						
				PRO	92083503	ø 280 x 22 x 46.2						
				PRO	92083505	ø 280 x 22 x 46.2						
		770700	Luc		2194503	[–] 21945 19.6	→3B-X-600000	Luc		2355402	[–] 23554 17.2	
1.8	10/96→11/00	92 / 125	Ate		2193801	[+] 21938 20.4	⊕J	Luc	epad	2355481	[–] 23554 17.2	
1.8	01/97→11/00	85 / 115	Ate	epad	2193881	[+] 21938 20.4	⊕J	Luc		82037300		
1.9 TDI	10/96→11/00	66 / 90	Luc		2194504	[+] 21945 19.6	3B-Y-000001→	Luc		82062800		
1.9 TDI	02/00→11/00	74 / 101	Ate		2301802	[+] 23018 20.4			PRO	92057503	ø 245 x 10 x 63.9	
			Ate	epad	2301881	[+] 23018 20.4						
			Ate		82029300							
			Luc		82062800							
			Ate		82062900							
				PRO	92057603	ø 288 x 25 x 46.2	→09/00					
				PRO	92057605	ø 288 x 25 x 46.2	→09/00					
				PRO	92083503	ø 280 x 22 x 46.2	→09/00					
				PRO	92083505	ø 280 x 22 x 46.2	→09/00					
		770800	Ate		2162402	[–] 21624 20.4	→3B-X-600000	Luc		2355402	[–] 23554 17.2	
1.8	01/00→12/01	112 / 152	Ate		2301802	[+] 23018 20.4	3B-Y-000001→	Luc	epad	2355481	[–] 23554 17.2	
2.8	09/98→12/99	128 / 174	Ate	epad	2301881	[+] 23018 20.4	3B-Y-000001→	Luc		82037300		
			Ate		82029300			Luc		82062800		
			Ate		82062900				PRO	92057503	ø 245 x 10 x 63.9	

		kW / hp											
PASSAT (3B2) 08/96→12/01													
		770800		PRO	92083603	ø 282.3 x 25 x 46.2	→3B-X-124107					
1.8	01/00→12/01	112 / 152										
2.8	09/98→12/99	128 / 174										
		770900	Luc		2194503	[–] 21945 19.6	→3B-X-600000	Luc		2355402	[–] 23554 17.2	
1.8 Syncro/4motion	10/96→11/00	92 / 125	Luc		2194504	[+] 21945 19.6	3B-Y-000001→	Luc	epad	2355481	[–] 23554 17.2	
			Luc		82062800			Luc		82037300		
								Luc		82062800		
									PRO	92088503	ø 245 x 10 x 48	
		771000	Ate		2162402	[–] 21624 20.4	→3B-X-600000	Luc		2355402	[–] 23554 17.2	
1.8 T	10/96→11/00	110 / 150										
1.9 TDI	10/96→11/00	81 / 110	Ate		2193801	[+] 21938 20.4	⊕ J 3B-Y-000001→	Luc	epad	2355481	[–] 23554 17.2	
1.9 TDI	08/98→11/00	85 / 115										
2.0	04/00→11/00	88 / 120	Ate	epad	2193881	[+] 21938 20.4	⊕ J 3B-Y-000001→	Luc		82037300		
2.3 VR5	10/96→11/00	110 / 150										
2.5 TDI	07/98→11/00	110 / 150	Ate		2301802	[+] 23018 20.4	3B-Y-000001→	Luc		82062800		
2.8 V6	08/96→11/00	142 / 193										
2.8 V6	05/97→09/99	132 / 180										
2.8 V6	09/99→11/00	140 / 190	Ate	epad	2301881	[+] 23018 20.4	3B-Y-000001→		PRO	92057503	ø 245 x 10 x 63.9	
			Ate		82029300							
			Ate		82062900							
				PRO	92083603	ø 282.3 x 25 x 46.2	→3B-X-124107					
		771100	Luc		2194503	[–] 21945 19.6	→3B-X-600000	Luc		2355402	[–] 23554 17.2	
1.8 T Syncro	11/96→08/00	110 / 150	Luc		2194504	[+] 21945 19.6	3B-Y-000001→	Luc	epad	2355481	[–] 23554 17.2	
			Luc		82062800			Luc		82037300		
				PRO	92057603	ø 288 x 25 x 46.2		Luc		82062800		
				PRO	92057605	ø 288 x 25 x 46.2			PRO	92088503	ø 245 x 10 x 48	
				PRO	92083503	ø 280 x 22 x 46.2						
				PRO	92083505	ø 280 x 22 x 46.2						
		771200	Ate		2162402	[–] 21624 20.4	→3B-X-600000	Luc		2355402	[–] 23554 17.2	
1.9 TDI 4motion	08/99→11/00	85 / 115										
1.9 TDI Syncro/4motion	10/96→11/00	81 / 110	Ate		2193801	[+] 21938 20.4	⊕ J 3B-Y-000001→	Luc	epad	2355481	[–] 23554 17.2	
2.0 4motion	04/00→11/00	88 / 120										
2.3 VR5 Syncro/4motion	10/97→11/00	110 / 150	Ate	epad	2193881	[+] 21938 20.4	⊕ J 3B-Y-000001→	Luc		82037300		
2.5 TDI Syncro/4motion	12/98→11/00	110 / 150										
2.8 Syncro	05/97→09/99	132 / 180	Ate		2301802	[+] 23018 20.4	3B-Y-000001→	Luc		82062800		
2.8 V6 4motion	09/99→11/00	140 / 190										
2.8 V6 Syncro/4motion	10/96→11/00	142 / 193	Ate	epad	2301881	[+] 23018 20.4	3B-Y-000001→		PRO	92088503	ø 245 x 10 x 48	
			Ate		82029300							
			Ate		82062900							
				PRO	92083603	ø 282.3 x 25 x 46.2	→3B-X-124107					
PASSAT (3B3) 11/00→05/05													
		771300	Ate		2193801	[+] 21938 20.4	⊕ J PR 1LE Ø 288 mm	Luc		2355402	[–] 23554 17.2	
1.6	11/00→05/05	75 / 102										
1.8	11/00→03/05	85 / 116	Ate	epad	2193881	[+] 21938 20.4	⊕ J PR 1LE Ø 288 mm	Luc	epad	2355481	[–] 23554 17.2	
1.8	03/03→03/05	92 / 125										
1.9 TDI	11/00→05/05	74 / 101	Ate		2301802	[+] 23018 20.4	PR 1LT Ø 312 mm	Luc		82037300		
1.9 TDI	11/00→05/05	96 / 130					PR 1ZC Ø 288 mm					
2.0	11/00→05/05	85 / 115										
2.0	11/01→05/05	96 / 130	Ate	epad	2301881	[+] 23018 20.4	PR 1LT Ø 312 mm	Luc		82062800		
							PR 1ZC Ø 288 mm					
			Ate		82029300				PRO	92057503	ø 245 x 10 x 63.9	
			Ate		82062900							
				PRO	92106103	ø 312 x 25 x 46.4	PR 1LT					
				PRO	92106105	ø 312 x 25 x 46.4	PR 1LT					
				PRO	92121003	ø 288 x 25 x 46.5	PR 1LE,1ZC					
		771400	Ate		2193801	[+] 21938 20.4	⊕ J PR 1LE Ø 288 mm	Luc		2355402	[–] 23554 17.2	
1.8 T	02/01→05/05	125 / 170										
1.8 T 20V	11/00→05/05	110 / 150										

T - Z

		kW / hp												
PASSAT (3B3) 11/00→05/05														
2.0 TDI	12/03→05/05	100 / 136	Ate		2193881	[+] 21938	20.4	⊕ J PR 1LE Ø 288 mm	Luc		2355481	[–] 23554	17.2	
2.3 V5	11/00→05/05	125 / 170												
2.5 TDI	11/00→05/05	110 / 150												
2.5 TDI	05/03→05/05	120 / 163	Ate		2301802	[+] 23018	20.4	PR 1LT Ø 312 mm PR 1ZC Ø 288 mm	Luc		82037300			
2.8	05/02→05/03	142 / 193												
			Ate		2301881	[+] 23018	20.4	PR 1LT Ø 312 mm PR 1ZC Ø 288 mm	Luc		82062800			
			Luc		2328001	[+] 23280	18.3	PR 1ZF,1ZG Ø 321 mm ⊕ arm.veh.		PRO	92057503	ø 245 x 10 x 63.9		
			Ate		82029300									
			Ate		82062900									
				PRO	92106103	ø 312 x 25 x 46.4		PR 1LT						
				PRO	92106105	ø 312 x 25 x 46.4		PR 1LT						
				PRO	92121003	ø 288 x 25 x 46.5		PR 1LE,1ZC						
		771500	Ate		2193801	[+] 21938	20.4	⊕ J PR 1LE Ø 288 mm	Luc		2355402	[–] 23554	17.2	
1.8 T 4motion	03/01→05/05	125 / 170												
2.3 V5 4motion	11/00→05/05	125 / 170	Ate		2193881	[+] 21938	20.4	⊕ J PR 1LE Ø 288 mm	Luc		2355481	[–] 23554	17.2	
2.5 TDI 4motion	11/00→05/05	110 / 150												
2.5 TDI 4motion	01/03→05/05	132 / 180	Ate		2301802	[+] 23018	20.4	PR 1LT Ø 312 mm PR 1ZC Ø 288 mm	Luc		82037300			
2.8 4motion	11/00→05/05	142 / 193												
			Ate		2301881	[+] 23018	20.4	PR 1LT Ø 312 mm PR 1ZC Ø 288 mm	Luc		82062800			
			Luc		2328001	[+] 23280	18.3	PR 1ZF,1ZG Ø 321 mm ⊕ arm.veh.		PRO	92088503	ø 245 x 10 x 48	PR 1KD ⊕ J PR 1KF	
			Ate		82029300					PRO	92174203	ø 256 x 22 x 48	PR 1KE	
			Ate		82062900					PRO	92176803	ø 269 x 22 x 54	PR 1KW	
				PRO	92106103	ø 312 x 25 x 46.4		PR 1LT						
				PRO	92106105	ø 312 x 25 x 46.4		PR 1LT						
				PRO	92121003	ø 288 x 25 x 46.5		PR 1LE,1ZC						
		771600	Ate		2193801	[+] 21938	20.4	⊕ J PR 1LE Ø 288 mm	Luc		2355402	[–] 23554	17.2	
1.9 TDI 4motion	11/00→05/05	96 / 130												
2.0 4motion	11/00→05/05	85 / 115	Ate		2193881	[+] 21938	20.4	⊕ J PR 1LE Ø 288 mm	Luc		2355481	[–] 23554	17.2	
			Ate		2301802	[+] 23018	20.4	PR 1LT Ø 312 mm PR 1ZC Ø 288 mm	Luc		82037300			
			Ate		2301881	[+] 23018	20.4	PR 1LT Ø 312 mm PR 1ZC Ø 288 mm	Luc		82062800			
			Ate		82029300					PRO	92088503	ø 245 x 10 x 48	PR 1KD ⊕ J PR 1KF	
			Ate		82062900					PRO	92174203	ø 256 x 22 x 48	PR 1KE	
				PRO	92106103	ø 312 x 25 x 46.4		PR 1LT		PRO	92176803	ø 269 x 22 x 54	PR 1KW	
				PRO	92106105	ø 312 x 25 x 46.4		PR 1LT						
				PRO	92121003	ø 288 x 25 x 46.5		PR 1LE,1ZC						
		771700	Ate		2148401	[o] 21484	20.8	PR 1LC Ø 334 mm	Luc		2355402	[–] 23554	17.2	
4.0 W8 4motion	09/01→09/04	202 / 275												
			Luc		2328001	[+] 23280	18.3	PR 1ZF,1ZG Ø 321 mm ⊕ arm.veh.	Luc		2355481	[–] 23554	17.2	
					98029600	L235		PR 1LC	Luc		82037300			
			Ate		82059200			PR 1LC	Luc		82062800			
			Ate		82062900					PRO	92174203	ø 256 x 22 x 48	PR 1KE	
										PRO	92176803	ø 269 x 22 x 54	PR 1KW	
PASSAT (3C2) 03/05→11/10														
		771800	Ate		2358701	[+] 23587	20.3		Luc		2448301	[–] 24483	17.2	
1.4 TSI	05/07→07/10	90 / 122												
1.4 TSI EcoFuel	01/09→07/10	110 / 150	Ate		2358781	[+] 23587	20.3		Luc		2448381	[–] 24483	17.2	
1.6 TDI	08/09→07/10	77 / 105												
1.8 TSI	05/07→07/10	118 / 160												
1.8 TSI	11/09→07/10	112 / 152	Ate		82062900				Luc		82509000			
2.0 BlueTDI	01/09→11/10	105 / 143												
2.0 FSI	08/07→07/10	125 / 170	Ate		82076800				Luc		82063300			
2.0 TDI	11/08→07/10	81 / 110												
2.0 TDI 4motion	05/09→07/10	125 / 170		PRO	92120503	ø 312 x 25 x 49.7				PRO	92140803	ø 282 x 12 x 48.5		

T - Z

		kW / hp											
PASSAT (3C2) 03/05→11/10													
		771800			TPM0008					TPM0008			
1.4 TSI	05/07→07/10	90 / 122											
1.4 TSI EcoFuel	01/09→07/10	110 / 150											
1.6 TDI	08/09→07/10	77 / 105											
1.8 TSI	05/07→07/10	118 / 160											
1.8 TSI	11/09→07/10	112 / 152											
2.0 BlueTDI	01/09→11/10	105 / 143											
2.0 FSI	08/07→07/10	125 / 170											
2.0 TDI	11/08→07/10	81 / 110											
2.0 TDI 4motion	05/09→07/10	125 / 170											
		771900	Ate		2358701	[+] 23587 20.3		Luc		2448301	[–] 24483 17.2	3C-8-000001→	
1.6	05/05→07/10	75 / 102											
1.6 FSI	03/05→06/08	85 / 115	Ate		2358781	[+] 23587 20.3		Luc		2448381	[–] 24483 17.2	3C-8-000001→	
1.9 TDI	03/05→11/08	77 / 105											
2.0	09/05→12/06	86 / 117											
2.0 FSI	03/05→07/10	110 / 150	Ate		82062900			Luc		2391401	[o] 23914 17.2	→3C-7-300000	
2.0 FSI	07/05→07/10	147 / 200											
2.0 FSI 4motion	09/05→07/10	110 / 150	Ate		82076800			Luc		2391481	[o] 23914 17.2	→3C-7-300000	
2.0 TDI	03/05→05/09	103 / 140											
2.0 TDI	03/05→11/10	100 / 136											
2.0 TDI	08/05→05/09	120 / 163			92120503	ø 312 x 25 x 49.7		Luc		82509000			
2.0 TDI	08/05→07/10	125 / 170											
2.0 TDI 16V	03/05→07/10	103 / 140			TPM0008			Luc		82063300			
2.0 TDI 16V 4motion	03/05→08/10	103 / 140											
2.0 TDI 4motion	03/05→05/09	103 / 140								92140803	ø 282 x 12 x 48.5		
										TPM0008			
		772000	Ate		2358701	[+] 23587 20.3		Luc		2391401	[o] 23914 17.2		
2.0 TDI	08/05→07/06	90 / 122											
2.0 TDI	11/05→05/07	88 / 120	Ate		2358781	[+] 23587 20.3		Luc		2391481	[o] 23914 17.2		
			Ate		82062900			Luc		82509000			
			Ate		82076800			Luc		82063300			
					92120503	ø 312 x 25 x 49.7				92140803	ø 282 x 12 x 48.5		
					TPM0008					TPM0008			
		772100	Ate		2380101	[+] 23801 20.3		Luc		2448302	[–] 24483 17.2	3C-8-000001→	
3.2 FSI 4motion	11/05→07/10	184 / 250											
3.6 FSI	06/05→07/10	206 / 280	Ate		2380181	[+] 23801 20.3		Luc		2448382	[–] 24483 17.2	3C-8-000001→	
3.6 FSI 4motion	09/05→07/10	206 / 280											
3.6 R36 4motion	04/07→07/10	220 / 300	Ate		82059200			Luc		2391402	[o] 23914 17.2	→3C-7-300000	
			Ate		82062900			Luc		2391482	[o] 23914 17.2	→3C-7-300000	
					92120603	ø 345 x 30 x 49.9		Luc		82502000			
					TPM0008					92140703	ø 310 x 22 x 48.5		
										TPM0008			
PASSAT (362) 08/10→													
		772200	Ate		2358701	[+] 23587 20.3		Luc		2448301	[–] 24483 17.2		
1.4 TSI	08/10→	90 / 122											
1.4 TSI EcoFuel	08/10→	110 / 150	Ate		2358781	[+] 23587 20.3		Luc		2448381	[–] 24483 17.2		
1.4 TSI MultiFuel	11/10→	118 / 160											
1.6 TDI	08/10→	77 / 105	Ate		82076800			Luc		82509000			
1.8 TSI	08/10→	118 / 160											
1.8 TSI	02/11→	112 / 152			92120503	ø 312 x 25 x 49.7				92140803	ø 282 x 12 x 48.5		
1.8 TSI	07/13→	127 / 173											
2.0 TDI	08/10→	100 / 136			TPM0008					TPM0008			
2.0 TDI	08/10→	103 / 140											
2.0 TDI	08/10→	125 / 170											
2.0 TDI	12/12→	130 / 177											
2.0 TDI 4motion	08/10→	103 / 140											
2.0 TDI 4motion	08/10→	125 / 170											
2.0 TDI 4motion	01/13→	130 / 177											
2.0 TSI	11/10→	155 / 210											
		772300	Ate		2358701	[+] 23587 20.3		Luc		2448301	[–] 24483 17.2		
1.4 TSI	11/12→	118 / 160											
			Ate		2358781	[+] 23587 20.3		Luc		2448381	[–] 24483 17.2		
			Ate		82076800			Luc		2391401	[o] 23914 17.2		
					92120503	ø 312 x 25 x 49.7		Luc		2391481	[o] 23914 17.2		
					TPM0008			Luc		82509000			
										92140803	ø 282 x 12 x 48.5		
										TPM0008			
		772400	Ate		2433301	[+] 24333 20.6	→06/13	Bos		2456301	[–] 24563 17.7		
2.0 TDI	09/12→	104 / 141											
2.5	09/11→	112 / 152											

T - Z

			kW / hp												
PASSAT (362) 08/10→															
3.6	09/12→	209 / 284		Ate		2433401	[+] 24334 20	07/13→				92224903	ø 272 x 10 x 48.3	
				Ake		82503300								
				Ate		82076800								
		772500		Ate		2358701	[+] 23587 20.3	PR 1ZM,1ZG		Luc		2448301	[–] 24483 17.2	
2.5	01/11→	125 / 170		Ate	epad	2358781	[+] 23587 20.3	PR 1ZM,1ZG		Luc	epad	2448381	[–] 24483 17.2	
				TRW		2473801	[+] 24738 20	PR 1LA, 1LB		Luc		82502000		PR 2EA
				Ate		82076800		PR 1ZM,1ZG		Luc		82509000		PR 1KW
					PRO	92120503	ø 312 x 25 x 49.7	PR 1ZM,1ZG			PRO	92140803	ø 282 x 12 x 48.5	PR 1KW
					PRO	92229803	ø 340 x 30 x 49.7	PR 1LA,1LB			PRO	92140703	ø 310 x 22 x 48.5	PR 2EA
						TPM0008						TPM0008		
		772600		TRW		2473801	[+] 24738 20			Luc		2448302	[–] 24483 17.2	
3.6 FSI 4motion	01/11→	220 / 300			PRO	92229803	ø 340 x 30 x 49.7			Luc	epad	2448382	[–] 24483 17.2	
						TPM0008					PRO	92140703	ø 310 x 22 x 48.5	
												TPM0008		
PASSAT (A32) 04/11→															
		772700		TRW		2473801	[+] 24738 20			Luc		2448302	[–] 24483 17.2	
3.6 FSI	04/11→	206 / 280			PRO	92229803	ø 340 x 30 x 49.7			Luc	epad	2448382	[–] 24483 17.2	
						TPM0008					PRO	92140703	ø 310 x 22 x 48.5	
												TPM0008		
PASSAT ALLTRACK (365) 01/12→															
		772800		Ate		2358701	[+] 23587 20.3			Luc		2448301	[–] 24483 17.2	
1.8 TSI	01/12→	112 / 152													
1.8 TSI	01/12→	118 / 160		Ate	epad	2358781	[+] 23587 20.3			Luc	epad	2448381	[–] 24483 17.2	
2.0 TDI	01/12→	103 / 140													
2.0 TDI 4motion	01/12→	103 / 140													
2.0 TDI 4motion	01/12→	125 / 170		Ate		82076800				Luc		82509000		
2.0 TDI 4motion	01/13→	130 / 177													
2.0 TSI 4motion	01/12→	155 / 210			PRO	92120503	ø 312 x 25 x 49.7				PRO	92140803	ø 282 x 12 x 48.5	
						TPM0008						TPM0008		
PASSAT CC (357) 05/08→01/12															
		772900		Ate		2358701	[+] 23587 20.3			Luc		2448301	[–] 24483 17.2	
1.4 TSI MultiFuel	01/11→01/12	118 / 160													
1.8 TSI	06/08→11/10	118 / 160		Ate	epad	2358781	[+] 23587 20.3			Luc	epad	2448381	[–] 24483 17.2	
1.8 TSI	11/08→05/10	112 / 152													
2.0 BlueTDI	05/09→11/10	105 / 143													
2.0 TDI	05/08→05/11	120 / 163		Ate		82062900				Luc		82509000		
2.0 TDI	06/08→05/11	100 / 136													
2.0 TDI	06/08→01/12	103 / 140													
2.0 TDI	06/08→01/12	125 / 170		Ate		82076800				Luc		82063300		
2.0 TDI 4motion	08/09→01/12	103 / 140													
2.0 TDI 4motion	11/09→01/12	125 / 170			PRO	92120503	ø 312 x 25 x 49.7				PRO	92140803	ø 282 x 12 x 48.5	
2.0 TSI	06/08→01/12	147 / 200													
2.0 TSI	11/10→01/12	155 / 211				TPM0008						TPM0008		
		773000		TRW		2473801	[+] 24738 20			Luc		2448301	[–] 24483 17.2	
3.6 FSI	06/08→01/12	206 / 280			PRO	92229803	ø 340 x 30 x 49.7			Luc	epad	2448381	[–] 24483 17.2	
						TPM0008				Luc		82502000		
											PRO	92140803	ø 282 x 12 x 48.5	
												TPM0008		
		773100		Ate		2380101	[+] 23801 20.3	PR 1LK Ø 345 mm		Luc		2448302	[–] 24483 17.2	
3.6 FSI 4motion	06/08→05/10	220 / 300													
3.6 FSI 4motion	06/08→01/12	206 / 280		Ate	epad	2380181	[+] 23801 20.3	PR 1LK Ø 345 mm		Luc	epad	2448382	[–] 24483 17.2	
				TRW		2473801	[+] 24738 20	PR 1LA,1LB Ø 340 mm		Luc		82502000		
				Ate		82059200		PR 1LK			PRO	92140703	ø 310 x 22 x 48.5	

kW / hp										
PASSAT CC (357) 05/08→01/12										
773100										
3.6 FSI 4motion 06/08→05/10 220 / 300	Ate		82062900					TPM0008		
3.6 FSI 4motion 06/08→01/12 206 / 280		PRO	92120603	ø 345 x 30 x 49.9	PR 1LK					
		PRO	92229803	ø 340 x 30 x 49.7	PR 1LA,1LB					
			TPM0008							
PASSAT Saloon (3B2) 08/96→12/01 → PASSAT (3B2), Page 1243										
PASSAT Saloon (3B3) 11/00→05/05 → PASSAT (3B3), Page 1244										
PASSAT Saloon (3C2) 03/05→11/10 → PASSAT (3C2), Page 1245										
PASSAT Stufenheck (3B2) 08/96→12/01 → PASSAT (3B2), Page 1243										
PASSAT Stufenheck (3B3) 11/00→05/05 → PASSAT (3B3), Page 1244										
PASSAT Stufenheck (3C2) 03/05→11/10 → PASSAT (3C2), Page 1245										
PASSAT Variant (3B5) 05/97→11/00										
773200	Luc		2194503	[–] 21945 19.6	→3B-X-600000	Luc		2355402	[–] 23554 17.2	
1.6 06/97→11/00 74 / 101	Ate		2193801	[+] 21938 20.4	⊕ J	Luc	epad	2355481	[–] 23554 17.2	
1.8 06/97→11/00 85 / 115	Ate	epad	2193881	[+] 21938 20.4	⊕ J	Luc		82037300		
1.8 06/97→11/00 92 / 125	Luc		2194504	[+] 21945 19.6	3B-Y-000001→	Luc		82062800		
1.9 TDI 06/97→11/00 66 / 90	Ate		2301802	[+] 23018 20.4			PRO	92057503	ø 245 x 10 x 63.9	
1.9 TDI 02/00→11/00 74 / 101	Ate	epad	2301881	[+] 23018 20.4						
	Ate		82029300							
	Luc		82062800							
	Ate		82062900							
		PRO	92057603	ø 288 x 25 x 46.2	→09/00					
		PRO	92057605	ø 288 x 25 x 46.2	→09/00					
		PRO	92083503	ø 280 x 22 x 46.2	→09/00					
		PRO	92083505	ø 280 x 22 x 46.2	→09/00					
773300	Luc		2194503	[–] 21945 19.6	→3B-X-600000	Luc		2355402	[–] 23554 17.2	
1.8 Syncro/4motion 06/97→11/00 92 / 125	Luc		2194504	[+] 21945 19.6	3B-Y-000001→	Luc	epad	2355481	[–] 23554 17.2	
	Luc		82062800			Luc		82037300		
						Luc		82062800		
							PRO	92088503	ø 245 x 10 x 48	
773400	Ate		2162402	[–] 21624 20.4	→3B-X-600000	Luc		2355402	[–] 23554 17.2	
1.8 T 06/97→11/00 110 / 150	Ate		2193801	[+] 21938 20.4	⊕ J 3B-Y-000001→	Luc	epad	2355481	[–] 23554 17.2	
1.9 TDI 06/97→11/00 81 / 110	Ate	epad	2193881	[+] 21938 20.4	⊕ J 3B-Y-000001→	Luc		82037300		
1.9 TDI 08/98→11/00 85 / 115	Ate		2301802	[+] 23018 20.4	3B-Y-000001→	Luc		82062800		
2.0 04/00→11/00 88 / 120	Ate	epad	2301881	[+] 23018 20.4	3B-Y-000001→		PRO	92057503	ø 245 x 10 x 63.9	
2.3 VR5 06/97→11/00 110 / 150	Ate		82029300							
2.5 TDI 07/98→11/00 110 / 150	Ate		82062900							
2.8 V6 06/97→11/00 142 / 193		PRO	92083603	ø 282.3 x 25 x 46.2	→3B-X-124107					
2.8 V6 09/97→09/99 132 / 180										
2.8 V6 09/99→11/00 140 / 190										
773500	Ate		2162402	[–] 21624 20.4	→3B-X-600000	Luc		2355402	[–] 23554 17.2	
1.9 TDI 4motion 08/99→11/00 85 / 115	Ate		2193801	[+] 21938 20.4	⊕ J 3B-Y-000001→	Luc	epad	2355481	[–] 23554 17.2	
1.9 TDI Syncro/4motion 06/97→11/00 81 / 110	Ate	epad	2193881	[+] 21938 20.4	⊕ J 3B-Y-000001→	Luc		82037300		
2.0 4motion 04/00→11/00 88 / 120	Ate		2301802	[+] 23018 20.4	3B-Y-000001→	Luc		82062800		
2.3 VR5 Syncro/4motion 10/97→11/00 110 / 150	Ate	epad	2301881	[+] 23018 20.4	3B-Y-000001→		PRO	92088503	ø 245 x 10 x 48	
2.5 TDI Syncro/4motion 12/98→11/00 110 / 150										
2.8 Syncro 05/97→09/99 132 / 180										
2.8 V6 4motion 09/99→11/00 140 / 190										
2.8 V6 Syncro/4motion 06/97→11/00 142 / 193										

T - Z

PASSAT Variant (3B5) 05/97→11/00

		773500	Ate		82029300								
1.9 TDI 4motion	08/99→11/00	85 / 115											
1.9 TDI Syncro/4motion	06/97→11/00	81 / 110	Ate		82062900								
2.0 4motion	04/00→11/00	88 / 120											
2.3 VR5 Syncro/4motion	10/97→11/00	110 / 150		PRO	92083603	ø 282.3 x 25 x 46.2	→3B-X-124107						
2.5 TDI Syncro/4motion	12/98→11/00	110 / 150											
2.8 Syncro	05/97→09/99	132 / 180											
2.8 V6 4motion	09/99→11/00	140 / 190											
2.8 V6 Syncro/4motion	06/97→11/00	142 / 193											

PASSAT Variant (3B6) 11/00→08/05

		773600	Ate		2193801	[+] 21938 20.4	⊕ J PR 1LE Ø 288 mm	Luc		2355402	[–] 23554 17.2	
1.6	11/00→05/05	75 / 102										
1.9 TDI	11/00→05/05	74 / 101										
1.9 TDI	11/00→05/05	96 / 130	Ate	epad	2193881	[+] 21938 20.4	⊕ J PR 1LE Ø 288 mm	Luc	epad	2355481	[–] 23554 17.2	
2.0	11/00→05/05	85 / 115										
2.0	11/01→05/05	96 / 130	Ate		2301802	[+] 23018 20.4	PR 1LT Ø 312 mm PR 1ZC Ø 288 mm	Luc		82037300		
			Ate	epad	2301881	[+] 23018 20.4	PR 1LT Ø 312 mm PR 1ZC Ø 288 mm	Luc		82062800		
			Ate		82029300				PRO	92057503	ø 245 x 10 x 63.9	
			Ate		82062900							
				PRO	92106103	ø 312 x 25 x 46.4	PR 1LT					
				PRO	92106105	ø 312 x 25 x 46.4	PR 1LT					
				PRO	92121003	ø 288 x 25 x 46.5	PR 1LE,1ZC					
		773700	Ate		2193801	[+] 21938 20.4	⊕ J PR 1LE Ø 288 mm	Luc		2355402	[–] 23554 17.2	
1.8 4motion	03/01→05/05	125 / 170										
2.3 VR5 4motion	11/00→05/05	125 / 170	Ate	epad	2193881	[+] 21938 20.4	⊕ J PR 1LE Ø 288 mm	Luc	epad	2355481	[–] 23554 17.2	
2.5 TDI 4motion	11/00→05/05	110 / 150										
2.5 TDI 4motion	01/03→05/05	132 / 180	Ate		2301802	[+] 23018 20.4	PR 1LT Ø 312 mm PR 1ZC Ø 288 mm	Luc		82037300		
2.8 4motion	11/00→05/05	142 / 193	Ate	epad	2301881	[+] 23018 20.4	PR 1LT Ø 312 mm PR 1ZC Ø 288 mm	Luc		82062800		
			Luc		2328001	[+] 23280 18.3	PR 1ZF,1ZG Ø 321 mm ⊕ arm.veh.		PRO	92088503	ø 245 x 10 x 48	PR 1KD ⊕ J PR 1KF
			Ate		82029300				PRO	92174203	ø 256 x 22 x 48	PR 1KE
			Ate		82062900				PRO	92176803	ø 269 x 22 x 54	PR 1KW
				PRO	92106103	ø 312 x 25 x 46.4	PR 1LT					
				PRO	92106105	ø 312 x 25 x 46.4	PR 1LT					
				PRO	92121003	ø 288 x 25 x 46.5	PR 1LE,1ZC					
		773800	Ate		2193801	[+] 21938 20.4	⊕ J PR 1LE Ø 288 mm	Luc		2355402	[–] 23554 17.2	
1.8 T	05/02→08/05	125 / 170										
1.8 T 20V	11/00→05/05	110 / 150	Ate	epad	2193881	[+] 21938 20.4	⊕ J PR 1LE Ø 288 mm	Luc	epad	2355481	[–] 23554 17.2	
2.0 TDI	12/03→05/05	100 / 136										
2.3 VR5	11/00→05/05	125 / 170	Ate		2301802	[+] 23018 20.4	PR 1LT Ø 312 mm PR 1ZC Ø 288 mm	Luc		82037300		
2.5 TDI	11/00→05/05	110 / 150										
2.5 TDI	05/03→05/05	120 / 163	Ate	epad	2301881	[+] 23018 20.4	PR 1LT Ø 312 mm PR 1ZC Ø 288 mm	Luc		82062800		
			Luc		2328001	[+] 23280 18.3	PR 1ZF,1ZG Ø 321 mm ⊕ arm.veh.		PRO	92057503	ø 245 x 10 x 63.9	
			Ate		82029300							
			Ate		82062900							
				PRO	92106103	ø 312 x 25 x 46.4	PR 1LT					
				PRO	92106105	ø 312 x 25 x 46.4	PR 1LT					
				PRO	92121003	ø 288 x 25 x 46.5	PR 1LE,1ZC					
		773900	Ate		2193801	[+] 21938 20.4	⊕ J PR 1LE Ø 288 mm	Luc		2355402	[–] 23554 17.2	
1.9 TDI 4motion	11/00→05/05	96 / 130										
			Ate	epad	2193881	[+] 21938 20.4	⊕ J PR 1LE Ø 288 mm	Luc	epad	2355481	[–] 23554 17.2	
			Ate		2301802	[+] 23018 20.4	PR 1LT Ø 312 mm PR 1ZC Ø 288 mm	Luc		82037300		
			Ate	epad	2301881	[+] 23018 20.4	PR 1LT Ø 312 mm PR 1ZC Ø 288 mm	Luc		82062800		
			Ate		82029300				PRO	92088503	ø 245 x 10 x 48	PR 1KD ⊕ J PR 1KF
			Ate		82062900				PRO	92174203	ø 256 x 22 x 48	PR 1KE
				PRO	92106103	ø 312 x 25 x 46.4	PR 1LT		PRO	92176803	ø 269 x 22 x 54	PR 1KW

T - Z

		kW / hp											
PASSAT Variant (3B6) 11/00→08/05													
		773900											
1.9 TDI 4motion	11/00→05/05	96 / 130		PRO	92106105	ø 312 x 25 x 46.4	PR 1LT						
				PRO	92121003	ø 288 x 25 x 46.5	PR 1LE,1ZC						
		774000	Ate		2193801	[+] 21938 20.4	⊕ J Ø 288 mm	Luc		2355402	[–] 23554 17.2		
2.0 4motion	11/00→05/05	85 / 115	Ate	epad	2193881	[+] 21938 20.4	⊕ J Ø 288 mm	Luc	epad	2355481	[–] 23554 17.2		
			Ate		2301802	[+] 23018 20.4	Ø 312 mm ⊖ J Ø 288 mm	Luc		82037300			
			Ate	epad	2301881	[+] 23018 20.4	Ø 312 mm ⊖ J Ø 288 mm	Luc		82062800			
			Ate		82029300				PRO	92088503	ø 245 x 10 x 48	PR 1KD ⊕ J PR 1KF	
			Ate		82062900				PRO	92174203	ø 256 x 22 x 48	PR 1KE	
				PRO	92106103	ø 312 x 25 x 46.4	PR 1LT		PRO	92176803	ø 269 x 22 x 54	PR 1KW	
				PRO	92106105	ø 312 x 25 x 46.4	PR 1LT						
				PRO	92121003	ø 288 x 25 x 46.5	PR 1LE,1ZC						
		774100	Ate		2148401	[o] 21484 20.8	PR 1LC Ø 334 mm	Luc		2355402	[–] 23554 17.2		
4.0 W8 4motion	09/01→09/04	202 / 275	Luc		2328001	[+] 23280 18.3	PR 1ZF,1ZG Ø 321 mm ⊕ arm.veh.	Luc	epad	2355481	[–] 23554 17.2		
					98029600	L235	PR 1LC	Luc		82037300			
			Ate		82059200		PR 1LC	Luc		82062800			
			Ate		82062900				PRO	92174203	ø 256 x 22 x 48	PR 1KE	
									PRO	92176803	ø 269 x 22 x 54	PR 1KW	
PASSAT Variant (3C5) 08/05→10/11													
		774200	Ate		2358701	[+] 23587 20.3		Luc		2448301	[–] 24483 17.2		
1.4 TSI	05/07→11/10	90 / 122											
1.4 TSI EcoFuel	01/09→11/10	110 / 150	Ate	epad	2358781	[+] 23587 20.3		Luc	epad	2448381	[–] 24483 17.2		
1.6 TDI	08/09→11/10	77 / 105											
1.8 TSI	05/07→10/11	118 / 160											
1.8 TSI	11/09→11/10	112 / 152	Ate		82062900			Luc		82509000			
2.0 BlueTDI	01/09→11/10	105 / 143											
2.0 FSI	08/07→11/10	125 / 170	Ate		82076800			Luc		82063300			
2.0 TDI	11/08→11/10	81 / 110											
2.0 TDI 4motion	05/09→11/10	125 / 170		PRO	92120503	ø 312 x 25 x 49.7			PRO	92140803	ø 282 x 12 x 48.5		
					TPM0008					TPM0008			
		774300	Ate		2358701	[+] 23587 20.3		Luc		2448301	[–] 24483 17.2	3C-8-000001→	
1.6	08/05→11/10	75 / 102											
1.6 FSI	08/05→06/08	85 / 115	Ate	epad	2358781	[+] 23587 20.3		Luc	epad	2448381	[–] 24483 17.2	3C-8-000001→	
1.9 TDI	08/05→11/08	77 / 105											
2.0 FSI	08/05→11/10	110 / 150											
2.0 FSI 4motion	09/05→11/10	110 / 150	Ate		82062900			Luc		2391401	[o] 23914 17.2	→3C-7-300000	
2.0 TDI	08/05→05/09	103 / 140											
2.0 TDI	08/05→05/09	120 / 163	Ate		82076800			Luc	epad	2391481	[o] 23914 17.2	→3C-7-300000	
2.0 TDI	08/05→11/10	100 / 136											
2.0 TDI	08/05→11/10	125 / 170											
2.0 TDI 16V	08/05→11/10	103 / 140		PRO	92120503	ø 312 x 25 x 49.7		Luc		82509000			
2.0 TDI 16V 4motion	08/05→11/10	103 / 140											
2.0 TDI 4motion	08/05→05/09	103 / 140			TPM0008			Luc		82063300			
									PRO	92140803	ø 282 x 12 x 48.5		
										TPM0008			
		774400	Ate		2358701	[+] 23587 20.3		Luc		2448301	[–] 24483 17.2	3C-8-000001→	
2.0 FSI	08/05→11/10	147 / 200											
			Ate	epad	2358781	[+] 23587 20.3		Luc	epad	2448381	[–] 24483 17.2	3C-8-000001→	
			Ate		82062900			Luc		2391401	[o] 23914 17.2	→3C-7-300000	
			Ate		82076800			Luc	epad	2391481	[o] 23914 17.2	→3C-7-300000	
				PRO	92120503	ø 312 x 25 x 49.7		Luc		82509000			
					TPM0008				PRO	92140803	ø 282 x 12 x 48.5		
										TPM0008			
		774500	Ate		2358701	[+] 23587 20.3		Luc		2391401	[o] 23914 17.2		
2.0 TDI	08/05→02/06	90 / 122											
2.0 TDI	11/05→05/07	88 / 120											

T - Z

		kW / hp												
PASSAT Variant (3C5) 08/05→10/11														
		774500	Ate	epad	2358781	[+] 23587 20.3		Luc	epad	2391481	[o] 23914 17.2	
2.0 TDI	08/05→02/06	90 / 122	Ate		82062900			Luc		82509000		
2.0 TDI	11/05→05/07	88 / 120	Ate		82076800			Luc		82063300		
				PRO	92120503	ø 312 x 25 x 49.7			PRO	92140803	ø 282 x 12 x 48.5	
					TPM0008					TPM0008		
		774600	Ate		2380101	[+] 23801 20.3		Luc		2448302	[–] 24483 17.2	3C-8-000001→
3.2 FSI 4motion	11/05→11/10	184 / 250										
3.6 FSI	09/05→11/10	206 / 280	Ate	epad	2380181	[+] 23801 20.3		Luc	epad	2448382	[–] 24483 17.2	3C-8-000001→
3.6 FSI 4motion	09/05→11/10	206 / 280										
3.6 R36 4motion	04/07→11/10	220 / 300	Ate		82059200			Luc		2391402	[o] 23914 17.2	→3C-7-300000
			Ate		82062900			Luc	epad	2391482	[o] 23914 17.2	→3C-7-300000
				PRO	92120603	ø 345 x 30 x 49.9		Luc		82502000		
					TPM0008				PRO	92140703	ø 310 x 22 x 48.5	
										TPM0008		
PASSAT Variant (365) 08/10→														
		774700	Ate		2358701	[+] 23587 20.3		Luc		2448301	[–] 24483 17.2	
1.4 TSI	08/10→	90 / 122										
1.4 TSI EcoFuel	08/10→	110 / 150	Ate	epad	2358781	[+] 23587 20.3		Luc	epad	2448381	[–] 24483 17.2	
1.4 TSI MultiFuel	11/10→	118 / 160										
1.6 TDI	08/10→	77 / 105	Ate		82076800			Luc		82509000		
1.8 TSI	08/10→	118 / 160										
1.8 TSI	02/11→	112 / 152		PRO	92120503	ø 312 x 25 x 49.7			PRO	92140803	ø 282 x 12 x 48.5	
2.0 TDI	08/10→	100 / 136										
2.0 TDI	08/10→	103 / 140			TPM0008					TPM0008		
2.0 TDI	08/10→	125 / 170										
2.0 TDI	12/12→	130 / 177										
2.0 TDI 4motion	08/10→	103 / 140										
2.0 TDI 4motion	08/10→	125 / 170										
2.0 TDI 4motion	01/13→	130 / 177										
2.0 TSI	11/10→	155 / 210										
		774800	Ate		2358701	[+] 23587 20.3		Luc		2448301	[–] 24483 17.2	
1.4 TSI	11/12→	118 / 160										
			Ate	epad	2358781	[+] 23587 20.3		Luc	epad	2448381	[–] 24483 17.2	
			Ate		82076800			Luc		2391401	[o] 23914 17.2	
				PRO	92120503	ø 312 x 25 x 49.7		Luc	epad	2391481	[o] 23914 17.2	
					TPM0008			Luc		82509000		
									PRO	92140803	ø 282 x 12 x 48.5	
										TPM0008		
		774900	TRW		2473801	[+] 24738 20		Luc		2448302	[–] 24483 17.2	
3.6 FSI 4motion	01/11→	220 / 300										
				PRO	92229803	ø 340 x 30 x 49.7		Luc	epad	2448382	[–] 24483 17.2	
					TPM0008				PRO	92140703	ø 310 x 22 x 48.5	
										TPM0008		
PHAETON (3D_) 04/02→														
		775000	Luc		2328001	[+] 23280 18.3	PR 1LX →3D-5-002000 Ø 323 mm	Luc		2332603	[+] 23326 17.7	
3.0 V6 TDI 4motion	09/04→	165 / 224										
3.2 V6	04/02→	177 / 241	Bre		2375101	[+] 23751 16.7	PR 1LC Ø 365 mm	Luc		82063500		
3.2 V6 4motion	02/04→	177 / 241										
4.2 V8 4motion	05/03→	246 / 335	Ate		2389601	[+] 23896 20.5	PR 1ZL,1ZK Ø 360 mm			92152200	ø 280 x 22 x 42.4	PR 1KD
			Ate		82062900		PR 1ZL,1ZK Ø 360 mm		PRO	92152303	ø 310 x 22 x 42.4	PR 1KP
			Ate		82505700		PR 1ZL,1ZK Ø 360 mm		PRO	92177003	ø 335 x 22 x 42.4	PR 1KY
					92122100	ø 323 x 30 x 59.6	PR 1LX →3D-5-002000			TPM0008		
				PRO	92122103	ø 323 x 30 x 59.6	PR 1LX →3D-5-002000					
				PRO	92122203	ø 360 x 34 x 59.6	PR 1ZL,1ZK					
					TPM0008							

T - Z

		kW / hp												
PHAETON (3D_) 04/02→														
		775100	Ate		**2389601**	[+] 23896 20.5		Luc		**2332603**	[+] 23326 17.7	
3.0 V6 TDI 4motion	06/07→	171 / 233										
3.0 V6 TDI 4motion	11/08→	176 / 240	Ate		**82062900**			Luc		**82063500**		
3.6 V6 4motion	11/08→	206 / 280										
			Ate		**82505700**				PRO	**92152303**	ø 310 x 22 x 42.4	
				PRO	**92122203**	ø 360 x 34 x 59.6				**TPM0008**		
					TPM0008							
		775200	Bre		**2375101**	[+] 23751 16.7	PR 1LC	Luc		**2332603**	[+] 23326 17.7	
3.0 V6 TDI 4motion	11/13→	180 / 245	Ate		**2389601**	[+] 23896 20.5	PR 1ZL	Luc		**82054900**		
			Ate		**82505700**		PR 1ZL		PRO	**92152303**	ø 310 x 22 x 42.4	PR 1KP
				PRO	**92122203**	ø 360 x 34 x 59.6	PR 1ZL		PRO	**92177003**	ø 335 x 22 x 42.4	PR 1KY,2EA
					TPM0008					**TPM0008**		
		775300	Bre		**2375101**	[+] 23751 16.7	PR 1LC Ø 365 mm	Luc		**2332603**	[+] 23326 17.7	
5.0 V10 TDI 4motion	11/02→	230 / 313										
6.0 W12 4motion	04/02→	309 / 420	Ate		**2389601**	[+] 23896 20.5	PR 1ZL,1ZK Ø 360 mm	Luc		**82063500**		
6.0 W12 4motion	05/05→	331 / 450										
			Ate		**82062900**		PR 1ZL,1ZK Ø 360 mm		PRO	**92177003**	ø 335 x 22 x 42.4	
			Ate		**82505700**		PR 1ZL,1ZK Ø 360 mm			**TPM0008**		
				PRO	**92122203**	ø 360 x 34 x 59.6	PR 1ZL,1ZK					
					TPM0008							
PHAETON Saloon (3D_) 04/02→ → PHAETON (3D_), Page 1251												
PHAETON Stufenheck (3D_) 04/02→ → PHAETON (3D_), Page 1251												
POINTER 08/98→08/05												
		775400	Var		**2354601**	[–] 23546 16	Varga					
1.6	02/03→08/05	73 / 99										
1.8	06/02→07/05	73 / 99	Ate		**2119301**	[–] 21193 18	solid disc Teves					
2.0	08/98→10/01	82 / 111										
2.0	06/02→08/05	62 / 84	Ate		**2196202**	[–] 21962 15	vented disc Teves					
POINTER 08/05→												
		775500	Var		**2354601**	[–] 23546 16						
1.8	08/05→	73 / 99										
1.8 Hybrid	08/05→	73 / 99	Ate		**2119301**	[–] 21193 18						
1.9 SDi	12/05→	47 / 64										
			Ate		**2196202**	[–] 21962 15						
POINTER Pickup 05/98→07/05												
		775600	Var		**2354601**	[–] 23546 16	Varga					
1.6	05/98→05/02	68 / 92										
1.6	05/98→05/02	73 / 99	Ate		**2119301**	[–] 21193 18	solid disc Teves					
1.8	06/02→07/05	73 / 99										
			Ate		**2196202**	[–] 21962 15	vented disc Teves					
POINTER Pick-up 05/98→07/05 → POINTER Pickup, Page 1252												
POINTER Variant 06/02→03/06												
		775700	Var		**2354601**	[–] 23546 16	Varga					
1.8	06/02→03/06	73 / 99										
			Ate		**2119301**	[–] 21193 18	solid disc Teves					
			Ate		**2196202**	[–] 21962 15	vented disc Teves					
POLO (6N1) 10/94→10/99												
		775800	Kel		**2088708**	[–] 20887 17.3	→6N-TW070000 →6N-TY140000			**10191xx**	10191 5	
1.7 SDI	04/97→10/99	42 / 57	VW		**2186602**	[–] 21866 17.2	6N-TY140001→ 6N-TW070001→			**91018200**	ø 180 x 31	⊖ ABS →6N-XY227489
			Kel		**82026700**		→6N-TW070000 →6N-TY140000			**91044700**	ø 200 x 40	⊕ ABS ⊖ ABS 6N-XY227490→
			Ate		**82062900**		6N-TY140001→	Ate		**97000500**		⊖ ABS →6N-XY227489
				PRO	**92071903**	ø 239 x 10 x 33.5	→6N-SY087410 →6N-SW008500	Ate		**97006500**		⊕ ABS ⊖ ABS 6N-XY227490→
				PRO	**92072003**	ø 239 x 18 x 34.1	6N-SY087411→ 6N-SW008501→			**84018200**	bore ø 17.5 ø 180 x 31	⊖ ABS →6N-XY227489

T - Z

POLO (6N1) 10/94→10/99

		kW / hp										
1.7 SDI	04/97→10/99	775800 42 / 57								84018205	bore ø 17.5 ø 180 x 31	⊖ ABS →6N-XY227489
										94022800	ø 200,0 x 50.5	⊖ ABS 6N-XY420001→
										94006600	ø 180,0 x 38.5	⊖ ABS →6N-XY227489
										94006700	ø 200,0 x 49.8	⊕ ABS ⊖ ABS 6N-XY227490→
100 1.4 16V	04/96→10/99	775900 74 / 100	Luc		2194502	[–] 21945 16.2		Luc		2355402	[–] 23554 17.2	⊕ rear disc brake
			Luc		82062800			Luc		2355481	[–] 23554 17.2	⊕ rear disc brake
				PRO	92036803	ø 256 x 20 x 38.7		Luc		82033000		
										91044700	ø 200 x 40	⊕ rear drum brake
								Ate		97006500		⊕ rear drum brake
				PRO	92098203	ø 232 x 9 x 39.4						⊕ rear disc brake 6N-XY379992→
				PRO	92154203	ø 226 x 10 x 71.5						→6N-XY379991
				PRO	92041803	ø 226 x 10 x 71.5						→6N-XY379991
										94022800	ø 200,0 x 50.5	⊕ rear drum brake 6N-XY420001→
										94006700	ø 200,0 x 49.8	⊕ rear drum brake →6N-XY420000
120 1.6 16V GTI	09/98→10/99	776000 88 / 120	Luc		2194502	[–] 21945 16.2		Luc		2355402	[–] 23554 17.2	
			Luc		82062800			Luc		2355481	[–] 23554 17.2	
					92128300	ø 256 x 25 x 39.5		Luc		82033000		
				PRO	92098203	ø 232 x 9 x 39.4	6N-XY379992→					
				PRO	92154203	ø 226 x 10 x 71.5	→6N-XY379991					
				PRO	92041803	ø 226 x 10 x 71.5	→6N-XY379991					
50 1.0	09/96→10/99	776100 37 / 50	Kel		2088708	[–] 20887 17.3	→6N-TW070000 →6N-TY140000			10191xx	10191 5	
60 1.4	07/95→10/99	44 / 60	VW		2186602	[–] 21866 17.2	6N-TY140001→ 6N-TW070001→			91018200	ø 180 x 31	⊖ ABS →6N-XY227489
64 1.9 SDI	07/96→10/99	47 / 64	Kel		82026700		→6N-TY140000 →6N-TW070000			91044700	ø 200 x 40	⊕ ABS ⊖ ABS 6N-XY227490→
75 1.6	10/94→10/99	55 / 75	Ate		82062900		6N-TW070001→	Ate		97000500		⊖ ABS →6N-XY227489
				PRO	92071903	ø 239 x 10 x 33.5	→6N-SY087410 →6N-SW008500	Ate		97006500		⊕ ABS ⊖ ABS 6N-XY227490→
				PRO	92072003	ø 239 x 18 x 34.1	6N-SY087411→ 6N-SW008501→			84018200	bore ø 17.5 ø 180 x 31	⊖ ABS →6N-XY227489
										84018205	bore ø 17.5 ø 180 x 31	⊖ ABS →6N-XY227489
										94022800	ø 200,0 x 50.5	⊖ ABS 6N-XY420001→
										94006600	ø 180,0 x 38.5	⊖ ABS →6N-XY227489
										94006700	ø 200,0 x 49.8	⊕ ABS ⊖ ABS 6N-XY227490→
55 1.4	08/95→10/99	776200 40 / 55	Kel		2088708	[–] 20887 17.3	→6N-TW070000 →6N-TY140000			10191xx	10191 5	
			VW		2186602	[–] 21866 17.2	6N-TY140001→ 6N-TW070001→			91018200	ø 180 x 31	⊖ ABS →6N-XY227489
			Kel		82026700		→6N-TW070000 →6N-TY140000			91044700	ø 200 x 40	⊕ ABS ⊖ ABS 6N-XY227490→
			Ate		82062900			Ate		97000500		⊖ ABS →6N-XY227489
				PRO	92071903	ø 239 x 10 x 33.5	→6N-SY087410 →6N-SW008500	Ate		97006500		⊕ ABS ⊖ ABS 6N-XY227490→
				PRO	92072003	ø 239 x 18 x 34.1	6N-SY087411→ 6N-SW008501→			84018200	bore ø 17.5 ø 180 x 31	⊖ ABS →6N-XY227489
										84018205	bore ø 17.5 ø 180 x 31	⊖ ABS →6N-XY227489
										94022800	ø 200,0 x 50.5	⊖ ABS 6N-XY420001→
										94006600	ø 180,0 x 38.5	⊖ ABS →6N-XY227489
										94006700	ø 200,0 x 49.8	⊕ ABS ⊖ ABS 6N-XY227490→

		kW / hp											
POLO (6N1) 10/94→10/99													
		776300	Kel		**2088708**	[–] 20887 17.3	→6N-TW070000 →6N-TY140000			**10191xx**	10191 5	
60 1.7 SDI	08/97→10/99	44 / 60	VW		**2186602**	[–] 21866 17.2	6N-TY140001→ 6N-TW070001→			**91018200**	ø 180 x 31	⊖ ABS →6N-XY227489
			Kel		**82026700**		→6N-TW070000			**91044700**	ø 200 x 40	⊕ ABS ⊖ ABS 6N-XY227490→
			Ate		**82062900**			Ate		**97000500**		⊖ ABS →6N-XY227489
				PRO	**92071903**	ø 239 x 10 x 33.5	→6N-SY087410 →6N-SW008500	Ate		**97006500**		⊕ ABS ⊖ ABS 6N-XY227490→
				PRO	**92072003**	ø 239 x 18 x 34.1	6N-SY087411→ 6N-SW008501→			**84018205**	bore ø 17.5 ø 180 x 31	⊖ ABS →6N-XY227489
										94022800	ø 200,0 x 50.5	⊖ ABS 6N-XY420001→
										94006600	ø 180,0 x 38.5	⊖ ABS →6N-XY227489
										94006700	ø 200,0 x 49.8	⊕ ABS ⊖ ABS 6N-XY227490→
		776400	Kel		**2088708**	[–] 20887 17.3	→6N-TW070000 →6N-TY140000			**10191xx**	10191 5	
64 1.9 D	10/94→10/99	47 / 64	VW		**2186602**	[–] 21866 17.2	6N-TY140001→ 6N-TW070001→			**91018200**	ø 180 x 31	⊖ ABS →6N-XY227489
			Kel		**82026700**		→6N-TW070000 →6N-TY140000			**91044700**	ø 200 x 40	⊕ ABS ⊖ ABS 6N-XY227490→
			Ate		**82062900**		6N-TW070001→	Ate		**97000500**		⊖ ABS →6N-XY227489
				PRO	**92071903**	ø 239 x 10 x 33.5	→6N-SY087410 →6N-SW008500	Ate		**97006500**		⊕ ABS ⊖ ABS 6N-XY227490→
				PRO	**92072003**	ø 239 x 18 x 34.1	6N-SY087411→ 6N-SW008501→			**84018200**	bore ø 17.5 ø 180 x 31	⊖ ABS →6N-XY227489
										84018205	bore ø 17.5 ø 180 x 31	⊖ ABS →6N-XY227489
										94022800	ø 200,0 x 50.5	⊖ ABS 6N-XY420001→
										94006600	ø 180,0 x 38.5	⊖ ABS →6N-XY227489
										94006700	ø 200,0 x 49.8	⊕ ABS ⊖ ABS 6N-XY227490→
POLO (6N2) 10/99→09/01													
		776500	VW		**2186602**	[–] 21866 17.2				**10191xx**	10191 5	
1.0	10/99→09/01	37 / 50										
1.4	10/99→09/01	40 / 54										
1.4	10/99→09/01	44 / 60	Ate		**82062900**					**91044700**	ø 200 x 40	
1.7 SDI	10/99→09/01	44 / 60										
1.9 D	10/99→09/01	47 / 64		PRO	**92072003**	ø 239 x 18 x 34.1		Ate		**97006500**		
1.9 SDI	10/99→09/01	47 / 64								**84044706**	bore ø 17.5 ø 200 x 40	
										94022800	ø 200,0 x 50.5	
		776600	VW		**2186602**	[–] 21866 17.2		Luc		**2355402**	[–] 23554 17.2	⊕ rear disc brake
1.4 16V	10/99→09/01	55 / 75	Luc		**2194502**	[–] 21945 16.2	⊕ ABS	Luc	epad	**2355481**	[–] 23554 17.2	⊕ rear disc brake
			Luc		**82062800**		⊕ ABS	Luc		**82033000**		
			Ate		**82062900**					**91044700**	ø 200 x 40	⊕ rear drum brake
				PRO	**92036803**	ø 256 x 20 x 38.7	⊕ ABS	Ate		**97006500**		⊕ rear drum brake
				PRO	**92072003**	ø 239 x 18 x 34.1				**84044706**	bore ø 17.5 ø 200 x 40	⊕ rear drum brake
									PRO	**92098203**	ø 232 x 9 x 39.4	⊕ rear disc brake
										94022800	ø 200,0 x 50.5	⊕ rear drum brake
		776700	Luc		**2194502**	[–] 21945 16.2		Luc		**2355402**	[–] 23554 17.2	⊕ rear disc brake
1.4 16V	10/99→09/01	74 / 101	Luc		**82062800**			Luc	epad	**2355481**	[–] 23554 17.2	⊕ rear disc brake
				PRO	**92036803**	ø 256 x 20 x 38.7		Luc		**82033000**		
										91044700	ø 200 x 40	⊕ rear drum brake
								Ate		**97006500**		⊕ rear drum brake
										84044706	bore ø 17.5 ø 200 x 40	⊕ rear drum brake
									PRO	**92098203**	ø 232 x 9 x 39.4	⊕ rear disc brake

T - Z

		kW / hp											
POLO (6N2) 10/99→09/01													
		776700											
1.4 16V	10/99→09/01	74 / 101								94022800	ø 200,0 x 50.5	⊕ rear drum brake
		776800	Luc		2194502	[–] 21945 16.2		Luc		2355402	[–] 23554 17.2	⊕ rear disc brake
1.4 TDi	01/00→10/00	66 / 90										
1.4 TDI	10/99→09/01	55 / 75	Luc		82062800			Luc		2355481	[–] 23554 17.2	⊕ rear disc brake
				PRO	92036803	ø 256 x 20 x 38.7		Luc		82033000		
										91044700	ø 200 x 40	⊕ rear drum brake
								Ate		97006500		⊕ rear drum brake
										84044703	bore ø 19 ø 200 x 40	⊕ rear drum brake
									PRO	92098203	ø 232 x 9 x 39.4	⊕ rear disc brake
										94022800	ø 200,0 x 50.5	⊕ rear drum brake
		776900	Luc		2194502	[–] 21945 16.2		Luc		2355402	[–] 23554 17.2	
1.6 16V GTI	10/99→09/01	92 / 125										
			Luc		82062800			Luc		2355481	[–] 23554 17.2	
					92128300	ø 256 x 25 x 39.5		Luc		82033000		
									PRO	92098203	ø 232 x 9 x 39.4	
POLO (6R, 6C) 06/09→												
		777000	Ate		2313001	[–] 23130 19.7				91044700	ø 200 x 40	
1.0	01/14→	44 / 60										
1.0	01/14→	55 / 75	Ate	epad	2313081	[–] 23130 19.7		Ate		97006500		
1.2	06/09→	44 / 60										
1.2	06/09→	51 / 70										
1.2	08/11→	55 / 75	Ate		82062900					84044703	bore ø 19 ø 200 x 40	
				PRO	92082203	ø 256 x 22 x 36.5				94023800	ø 200,0 x 50.5	
					TPM0008							
		777100	Ate		2313001	[–] 23130 19.7		Luc		2355402	[–] 23554 17.2	
1.2 TDI	10/09→	55 / 75										
1.2 TSI	06/09→	63 / 86										
1.2 TSI	11/09→	77 / 105	Ate	epad	2313081	[–] 23130 19.7		Luc		2355481	[–] 23554 17.2	
1.2 TSI	05/11→05/14	66 / 90										
1.2 TSI	01/14→	81 / 110	Ate		82062900			Luc		82037300		
1.4	06/09→	63 / 85										
1.4 BiFuel	03/10→01/11	60 / 82										
1.6 BiFuel	01/11→	60 / 82		PRO	92082203	ø 256 x 22 x 36.5				91044700	ø 200 x 40	
1.6 TDI	06/09→	55 / 75										
1.6 TDI	06/09→	66 / 90			TPM0008			Ate		97006500		
										84044703	bore ø 19 ø 200 x 40	
									PRO	92082503	ø 232 x 9 x 39.3	
										TPM0008		
										94023800	ø 200,0 x 50.5	
		777200	Ate		2313001	[–] 23130 19.7		Luc		2355402	[–] 23554 17.2	
1.2 TSI 16V	02/14→	66 / 90										
1.4 TDI	02/14→	66 / 90	Ate	epad	2313081	[–] 23130 19.7		Luc		2355481	[–] 23554 17.2	
				PRO	92082203	ø 256 x 22 x 36.5			PRO	92082503	ø 232 x 9 x 39.3	
					TPM0008					TPM0008		
		777300	Ate		2358704	[–] 23587 20.3		Luc		2355402	[–] 23554 17.2	
1.4 GTI	05/10→	132 / 180										
1.4 TSI	10/12→	103 / 140	Ate		2358782	[–] 23587 20.3		Luc		2355481	[–] 23554 17.2	
1.6 TDI	06/09→	77 / 105										
			Ate		82062900			Luc		82037300		
			Ate		82076800				PRO	92082503	ø 232 x 9 x 39.3	
				PRO	92106603	ø 288 x 25 x 34.4				TPM0008		
					TPM0008							
		777400	Ate		2313001	[–] 23130 19.7				94023800	ø 200,0 x 50.5	
1.4 TDI	03/14→	55 / 75										
			Ate	epad	2313081	[–] 23130 19.7						

		kW / hp											
POLO (6R, 6C) 06/09→													
		777400											
1.4 TDI	03/14→	55 / 75		PRO	92082203	ø 256 x 22 x 36.5							
					TPM0008								
		777500	TRW		2568301	[+] 25683 20.3		Ate		2500801	[–] 25008 16.4		
1.4 TSI	05/14→	110 / 150			98050800	L170		Ate		82503500			
				PRO	92120803	ø 288 x 25 x 49.8			PRO	92224903	ø 272 x 10 x 48.3		
				PRO	92120805	ø 288 x 25 x 49.8				TPM0008			
					TPM0008								
		777600	Ate		2313001	[–] 23130 19.7		Ate		91052400	ø 230 x 32		
1.6	01/10→	77 / 105	Ate	epad	2313081	[–] 23130 19.7		Ate		84052400	bore ø 19 ø 230 x 32		
				PRO	92082203	ø 256 x 22 x 36.5				94024300	ø 230,0 x 39		
					TPM0008								
		777700	Ate		82062900			Luc		2355402	[–] 23554 17.2		
2.0 R WRC	08/13→	162 / 220	Ate		82076800			Luc	epad	2355481	[–] 23554 17.2		
					TPM0008					TPM0008			
POLO (9N_) 10/01→01/12													
		777800	Ate		2313001	[–] 23130 19.7	⊕ power steering			91044700	ø 200 x 40		
1.2	01/02→05/07	40 / 54											
1.2	05/07→11/09	44 / 60	Ate	epad	2313081	[–] 23130 19.7	⊕ power steering	Ate		97006500			
			VW		2186602	[–] 21866 17.2	⊖ power steering			84044706	bore ø 17.5 ø 200 x 40		
			VW		2186801	[+] 21868 17.2	⊖ power steering			94023800	ø 200,0 x 50.5		
			Ate		2313101	[+] 23131 19.7	⊕ power steering						
			Ate	epad	2313181	[+] 23131 19.7	⊕ power steering						
			Ate		82062900		⊕ power steering						
				PRO	92082203	ø 256 x 22 x 36.5	⊕ power steering						
				PRO	92106803	ø 239 x 18 x 34.9	⊖ power steering						
		777900	Ate		2313001	[–] 23130 19.7		Luc		2355402	[–] 23554 17.2	⊕ rear disc brake	
1.2 12V	10/01→07/07	47 / 64											
1.2 12V	05/07→11/09	51 / 69	Ate	epad	2313081	[–] 23130 19.7		Luc	epad	2355481	[–] 23554 17.2	⊕ rear disc brake	
1.4	06/05→11/09	63 / 86											
1.4 16V	10/01→05/08	55 / 75	Ate		2313101	[+] 23131 19.7		Luc		2382301	[+] 23823 17.2	⊕ rear disc brake	
1.4 16V	10/01→05/08	74 / 101											
1.4 16V	05/06→11/09	59 / 80	Ate	epad	2313181	[+] 23131 19.7		Luc		82037300		⊕ rear disc brake	
1.4 FSI	02/02→07/06	63 / 86											
1.4 TDI	10/01→06/05	55 / 75	Ate		82062900			Luc		82062800		⊕ rear disc brake	
1.4 TDI	04/05→11/09	51 / 70											
1.4 TDI	04/05→11/09	59 / 80		PRO	92082203	ø 256 x 22 x 36.5				91044700	ø 200 x 40	⊕ rear drum brake	
1.6 16V	05/06→11/09	77 / 105						Ate		97006500		⊕ rear drum brake	
1.9 TDI	10/01→11/09	74 / 101								84044706	bore ø 17.5 ø 200 x 40	⊕ rear drum brake	
									PRO	92082503	ø 232 x 9 x 39.3	⊕ rear disc brake	
										94023800	ø 200,0 x 50.5	⊕ rear drum brake	
		778000	Ate		2313001	[–] 23130 19.7		Luc		2355402	[–] 23554 17.2	⊕ rear disc brake	
1.6	08/02→05/05	74 / 101											
1.6 Flex	06/08→04/09	74 / 101	Ate	epad	2313081	[–] 23130 19.7		Luc	epad	2355481	[–] 23554 17.2	⊕ rear disc brake	
			Ate		2313101	[+] 23131 19.7	PR 1LR,1ZG	Luc		2382301	[+] 23823 17.2	⊕ rear disc brake	
			Ate	epad	2313181	[+] 23131 19.7	PR 1LR,1ZG	Luc		82037300		⊕ rear disc brake	
			Ate		82062900			Luc		82062800		⊕ rear disc brake	
				PRO	92082203	ø 256 x 22 x 36.5				91044700	ø 200 x 40	⊕ rear drum brake	

T - Z

POLO (9N_) 10/01→01/12

		kW / hp											
		778000							Ate		97006500		⊕ rear drum brake
1.6	08/02→05/05	74 / 101									84044706	bore ø 17.5 ø 200 x 40	⊕ rear drum brake
1.6 Flex	06/08→04/09	74 / 101								PRO	92082503	ø 232 x 9 x 39.3	⊕ rear disc brake
											94023800	ø 200,0 x 50.5	⊕ rear drum brake
		778100	Luc		2358101	[–] 23581 19			Luc		2355402	[–] 23554 17.2	
1.8 GTI	09/05→11/09	110 / 150											
1.9 TDI	11/03→11/09	96 / 130	Luc		2358102	[+] 23581 19			Luc	epad	2355481	[–] 23554 17.2	
2.0	10/04→01/12	85 / 115											
2.0 Total Flex	10/08→01/12	88 / 120	Luc		82055400				Luc		2382301	[+] 23823 17.2	
			Luc		82063500				Luc		82037300		
				PRO	92106603	ø 288 x 25 x 34.4			Luc		82062800		
										PRO	92082503	ø 232 x 9 x 39.3	
		778200	Ate		2339201	[+] 23392 20.6			Luc		2355402	[–] 23554 17.2	
1.8 GTi Cup Edition	05/06→11/09	132 / 180											
			Ate		82029300				Luc	epad	2355481	[–] 23554 17.2	
			Ate		82062900				Luc		2382301	[+] 23823 17.2	
				PRO	92098503	ø 312 x 25 x 34			Luc		82037300		
									Luc		82062800		
										PRO	92082503	ø 232 x 9 x 39.3	
		778300	Ate		2313001	[–] 23130 19.7					91044700	ø 200 x 40	
1.9 SDI	10/01→11/09	47 / 64											
			Ate		2313081	[–] 23130 19.7			Ate		97006500		
				epad									
			Ate		2313101	[+] 23131 19.7					84044706	bore ø 17.5 ø 200 x 40	
			Ate	epad	2313181	[+] 23131 19.7					94023800	ø 200,0 x 50.5	
			Ate		82062900								
				PRO	92082203	ø 256 x 22 x 36.5							

POLO Box (6NF) 10/94→12/99

		778400	Kel		2088708	[–] 20887 17.3	→6N-TW070000 →6N-TY140000				10191xx	10191 5	
1.0	10/94→12/99	33 / 45											
1.4	05/98→12/99	44 / 60	VW		2186602	[–] 21866 17.2	6N-TY140001→ 6N-TW070001→				91018200	ø 180 x 31	⊖ ABS →6N-X-Y227489
1.7 SDI	08/97→12/99	44 / 60											
1.9 D	10/94→12/99	47 / 64	Kel		82026700		→6N-TY140000 →6N-TW070000				91044700	ø 200 x 40	⊖ ABS 6N-X-Y227490→
				PRO	92071903	ø 239 x 10 x 33.5	→6N-SY087410 →6N-SW008500		Ate		97000500		⊖ ABS →6N-X-Y227489
				PRO	92072003	ø 239 x 18 x 34.1	6N-SY087411→ 6N-SW008501→		Ate		97006500		⊖ ABS 6N-X-Y227490→
											84018205	bore ø 17.5 ø 180 x 31	⊖ ABS →6N-X-Y227489
											94022800	ø 200,0 x 50.5	⊖ ABS 6N-XY420001→
											94006600	ø 180,0 x 38.5	⊖ ABS →6N-XY227489
											94006700	ø 200,0 x 49.8	⊕ ABS ⊖ ABS 6N-XY227490→
		778500	Kel		2088708	[–] 20887 17.3	→6N-TW070000 →6N-TY140000				10191xx	10191 5	
1.9 SDI	07/96→12/99	47 / 64											
			VW		2186602	[–] 21866 17.2	6N-TY140001→ 6N-TW070001→				91018200	ø 180 x 31	⊖ ABS →6N-X-Y227489
			Kel		82026700		→6N-TY140000 →6N-TW070000				91044700	ø 200 x 40	⊖ ABS 6N-X-Y227490→
				PRO	92071903	ø 239 x 10 x 33.5	→6N-SY087410 →6N-SW008500		Ate		97000500		⊖ ABS →6N-X-Y227489
				PRO	92072003	ø 239 x 18 x 34.1	6N-SY087411→ 6N-SW008501→		Ate		97006500		⊖ ABS 6N-X-Y227490→
											84018200	bore ø 17.5 ø 180 x 31	⊖ ABS →6N-X-Y227489
											84018205	bore ø 17.5 ø 180 x 31	⊖ ABS →6N-X-Y227489
											94022800	ø 200,0 x 50.5	⊖ ABS 6N-XY420001→

T - Z

		kW / hp											
POLO Box (6NF) 10/94→12/99													
		778500											
1.9 SDI	07/96→12/99	47 / 64								94006600	ø 180,0 x 38.5	⊖ ABS →6N-XY227489	
										94006700	ø 200,0 x 49.8	⊕ ABS ⊖ ABS 6N-XY227490→	
POLO CLASSIC (6KV2) 11/95→07/05													
		778600	Kel		2088708	[–] 20887 17.3	PR 1LA →6K-W-518500	Luc		2355401	[–] 23554 15.2	⊖ ABS →09/99	
1.0	08/96→12/01	37 / 50											
1.4	05/96→07/02	62 / 84	VW		2186601	[–] 21866 15.3	PR 1LG,1ZD	Luc		2355402	[–] 23554 17.2	⊕ ABS PR 1KK,1KT	
1.6	05/96→09/01	65 / 88											
1.8	05/96→09/01	73 / 99											
1.8 Hybrid	05/96→09/01	74 / 101	VW		2186603	[–] 21866 19.7	PR 1LM →6K-W-518500 →6K-V-022628	Luc		2355481	[–] 23554 17.2	⊕ ABS PR 1KK,1KT	
1.9 SDI	06/96→09/01	48 / 65											
110 1.9 TDI	06/98→01/02	81 / 110											
2.0	06/99→07/05	74 / 101	Luc		2194502	[–] 21945 16.2	PR 1LY,11ZE,1ZK →6K-V-022628 6K-Y-502795→	Luc		2355482	[–] 23554 15.2	⊖ ABS →09/99	
2.0	08/99→09/01	85 / 116											
90 1.9 TDI	09/96→09/01	66 / 90	Kel		82026700		→6K-W-518500 PR 1LA	Luc		82033000			
			Luc		82062800		PR 1LY,11ZE,1ZK →6K-V-022628 6K-Y-502795→	Luc		82062800			
			Ate		82062900		→6K-V-022628 PR 1LM			91018200	ø 180 x 31	PR 1KA ⊖ ABS	
				PRO	92009303	ø 239 x 10 x 38.6	PR 1LA →6K-W-518500			91044700	ø 200 x 40	PR 1KB,1KM ⊕ ABS →6K-X-609999 6K-X-610000→	
				PRO	92010603	ø 239 x 12 x 35	PR 1LM →6K-W-518500 →6K-V-022628	Ate		97000500		PR 1KA ⊖ ABS	
				PRO	92012103	ø 239 x 20 x 38.7	PR 1LG,1ZD	Ate		97006500		PR 1KB,1KM ⊕ ABS →6K-X-609999 6K-X-610000→	
				PRO	92036803	ø 256 x 20 x 38.7	PR 1LY,1ZE,1ZK →6K-V-022628 6K-Y-502795→			83044704	bore ø 17.5 ø 200 x 40	PR 1KB,1KM ⊕ ABS →6K-X-609999 6K-X-610000→	
									PRO	92098203	ø 232 x 9 x 39.4	PR 1KK,1KT	
									PRO	92154203	ø 226 x 10 x 71.5		
									PRO	92041803	ø 226 x 10 x 71.5		
										94022800	ø 200,0 x 50.5	6K-X-610000→ PR 1KB,1KM	
										94006600	ø 180,0 x 38.5	PR 1KA ⊖ ABS	
										94006700	ø 200,0 x 49.8	PR 1KB,1KM →6K-X-609999	
		778700	Kel		2088708	[–] 20887 17.3	PR 1LA →6K-W-518500	Luc		2355402	[–] 23554 17.2	⊕ ABS PR 1KK,1KT	
1.8	08/00→07/02	82 / 111	VW		2186601	[–] 21866 15.3	PR 1LG,1ZD	Luc		2355481	[–] 23554 17.2	⊕ ABS PR 1KK,1KT	
			VW		2186603	[–] 21866 19.7	PR 1LM →6K-W-518500 →6K-V-022628	Luc		82033000			
			Luc		2194502	[–] 21945 16.2	PR 1LY,11ZE,1ZK →6K-V-022628 6K-Y-502795→	Luc		82062800			
			Kel		82026700		→6K-W-518500 PR 1LA			91018200	ø 180 x 31	PR 1KA ⊖ ABS	
			Luc		82062800		PR 1LY,11ZE,1ZK →6K-V-022628 6K-Y-502795→			91044700	ø 200 x 40	PR 1KB,1KM ⊕ ABS →6K-X-609999 6K-X-610000→	
			Ate		82062900		→6K-V-022628 PR 1LM	Ate		97000500		PR 1KA ⊖ ABS	
				PRO	92009303	ø 239 x 10 x 38.6	PR 1LA →6K-W-518500	Ate		97006500		PR 1KB,1KM ⊕ ABS →6K-X-609999 6K-X-610000→	
				PRO	92010603	ø 239 x 12 x 35	PR 1LM →6K-W-518500 →6K-V-022628			83044704	bore ø 17.5 ø 200 x 40	PR 1KB,1KM ⊕ ABS →6K-X-609999 6K-X-610000→	
				PRO	92012103	ø 239 x 20 x 38.7	PR 1LG,1ZD						
				PRO	92036803	ø 256 x 20 x 38.7	PR 1LY,1ZE,1ZK →6K-V-022628 6K-Y-502795→		PRO	92098203	ø 232 x 9 x 39.4	PR 1KK,1KT	
									PRO	92154203	ø 226 x 10 x 71.5		
									PRO	92041803	ø 226 x 10 x 71.5		
										94022800	ø 200,0 x 50.5	6K-X-610000→ PR 1KB,1KM	
										94006600	ø 180,0 x 38.5	PR 1KA ⊖ ABS	
										94006700	ø 200,0 x 49.8	PR 1KB,1KM →6K-X-609999	
		778800	Kel		2088708	[–] 20887 17.3	PR 1LA →6K-W-518500	Luc		2355401	[–] 23554 15.2	⊖ ABS →09/99	
100 1.6	12/95→09/01	74 / 100											
57 1.7 SDI	07/97→09/01	42 / 57	VW		2186601	[–] 21866 15.3	PR 1LG,1ZD	Luc		2355402	[–] 23554 17.2	⊕ ABS PR 1KK,1KT	
60 1.4	12/95→09/01	44 / 60											
68 1.9 SDI	08/99→01/02	50 / 68											
75 1.6	11/95→09/01	55 / 75	VW		2186603	[–] 21866 19.7	PR 1LM →6K-W-518500 →6K-V-022628	Luc		2355481	[–] 23554 17.2	⊕ ABS PR 1KK,1KT	
90 1.8	01/97→09/01	66 / 90											

T - Z

POLO CLASSIC (6KV2) 11/95→07/05

		778800												
100 1.6	12/95→09/01	74 / 100	Luc		2194502	[–] 21945	16.2	PR 1LY,11ZE,1ZK →6K-V-022628 6K-Y-502795→	Luc		2355482	[–] 23554	15.2	⊖ ABS →09/99
57 1.7 SDI	07/97→09/01	42 / 57												
60 1.4	12/95→09/01	44 / 60	Kel		82026700			→6K-W-518500 PR 1LA	Luc		82033000			
68 1.9 SDI	08/99→01/02	50 / 68												
75 1.6	11/95→09/01	55 / 75	Luc		82062800			PR 1LY,11ZE,1ZK →6K-V-022628 6K-Y-502795→	Luc		82062800			
90 1.8	01/97→09/01	66 / 90												
			Ate		82062900			→6K-V-022628 PR 1LM			91018200	ø 180 x 31		PR 1KA ⊖ ABS
				PRO	92009303	ø 239 x 10 x 38.6		PR 1LA →6K-W-518500			91044700	ø 200 x 40		PR 1KB,1KM ⊕ ABS →6K-X-609999
				PRO	92010603	ø 239 x 12 x 35		PR 1LM →6K-W-518500 →6K-V-022628						6K-X-610000→
									Ate		97000500			PR 1KA ⊖ ABS
				PRO	92012103	ø 239 x 20 x 38.7		PR 1LG,1ZD	Ate		97006500			PR 1KB,1KM ⊕ ABS →6K-X-609999
				PRO	92036803	ø 256 x 20 x 38.7		PR 1LY,1ZE,1ZK →6K-V-022628 6K-Y-502795→						6K-X-610000→
											83044704	bore ø 17.5 ø 200 x 40		PR 1KB,1KM ⊕ ABS →6K-X-609999
														6K-X-610000→
											84018205	bore ø 17.5 ø 180 x 31		PR 1KA ⊖ ABS
										PRO	92098203	ø 232 x 9 x 39.4		PR 1KK,1KT
										PRO	92154203	ø 226 x 10 x 71.5		
										PRO	92041803	ø 226 x 10 x 71.5		
											94022800	ø 200,0 x 50.5		6K-X-610000→ PR 1KB,1KM
											94006600	ø 180,0 x 38.5		PR 1KA ⊖ ABS
											94006700	ø 200,0 x 49.8		PR 1KB,1KM →6K-X-609999
		778900	Kel		2088708	[–] 20887	17.3	PR 1LA →6K-W-518500	Luc		2355401	[–] 23554	15.2	⊖ ABS
54 1.4	01/98→08/99	40 / 54												
64 1.9 SDI	12/95→08/99	47 / 64	VW		2186601	[–] 21866	15.3	PR 1LG,1ZD	Luc		2355402	[–] 23554	17.2	⊕ ABS
														PR 1KK,1KT
			VW		2186603	[–] 21866	19.7	PR 1LM →6K-W-518500 →6K-V-022628	Luc		2355481	[–] 23554	17.2	⊕ ABS
														PR 1KK,1KT
			Luc		2194502	[–] 21945	16.2	PR 1LY,11ZE,1ZK →6K-V-022628 6K-Y-502795→	Luc		2355482	[–] 23554	15.2	⊖ ABS
			Kel		82026700			→6K-W-518500 PR 1LA	Luc		82033000			
			Luc		82062800			PR 1LY,11ZE,1ZK →6K-V-022628 6K-Y-502795→	Luc		82062800			
			Ate		82062900			→6K-V-022628 PR 1LM			91018200	ø 180 x 31		PR 1KA ⊖ ABS
				PRO	92009303	ø 239 x 10 x 38.6		PR 1LA →6K-W-518500			91044700	ø 200 x 40		PR 1KB,1KM ⊕ ABS →6K-X-609999
				PRO	92010603	ø 239 x 12 x 35		PR 1LM →6K-W-518500 →6K-V-022628						6K-X-610000→
									Ate		97000500			PR 1KA ⊖ ABS
				PRO	92012103	ø 239 x 20 x 38.7		PR 1LG,1ZD	Ate		97006500			PR 1KB,1KM ⊕ ABS →6K-X-609999
				PRO	92036803	ø 256 x 20 x 38.7		PR 1LY,1ZE,1ZK →6K-V-022628 6K-Y-502795→						6K-X-610000→
											83044704	bore ø 17.5 ø 200 x 40		PR 1KB,1KM ⊕ ABS →6K-X-609999
														6K-X-610000→
											84018205	bore ø 17.5 ø 180 x 31		PR 1KA ⊖ ABS
										PRO	92098203	ø 232 x 9 x 39.4		PR 1KK,1KT
										PRO	92154203	ø 226 x 10 x 71.5		
										PRO	92041803	ø 226 x 10 x 71.5		
											94022800	ø 200,0 x 50.5		6K-X-610000→ PR 1KB,1KM
											94006600	ø 180,0 x 38.5		PR 1KA ⊖ ABS
											94006700	ø 200,0 x 49.8		PR 1KB,1KM →6K-X-609999
		779000	Kel		2088708	[–] 20887	17.3	PR 1LA →6K-W-518500	Luc		2355402	[–] 23554	17.2	⊕ ABS
75 1.4 16V	10/99→09/01	55 / 75												PR 1KK,1KT
			VW		2186601	[–] 21866	15.3	PR 1LG,1ZD	Luc		2355481	[–] 23554	17.2	⊕ ABS
														PR 1KK,1KT
			VW		2186603	[–] 21866	19.7	PR 1LM →6K-W-518500 →6K-V-022628	Luc		82033000			
			Luc		2194502	[–] 21945	16.2	PR 1LY,11ZE,1ZK →6K-V-022628 6K-Y-502795→	Luc		82062800			
			Kel		82026700			→6K-W-518500 PR 1LA			91018200	ø 180 x 31		PR 1KA ⊖ ABS

kW / hp

POLO CLASSIC (6KV2) 11/95→07/05

779000													
75 1.4 16V	10/99→09/01	55 / 75	Luc		82062800		PR 1LY,11ZE,1ZK →6K-V-022628 6K-Y-502795→				91044700	ø 200 x 40	PR 1KB,1KM ⊕ ABS →6K-X-609999
			Ate		82062900		→6K-V-022628 PR 1LM						6K-X-610000→
				PRO	92009303	ø 239 x 10 x 38.6	PR 1LA →6K-W-518500		Ate		97000500		PR 1KA ⊖ ABS
				PRO	92010603	ø 239 x 12 x 35	PR 1LM →6K-W-518500 →6K-V-022628		Ate		97006500		PR 1KB,1KM ⊕ ABS →6K-X-609999
				PRO	92012103	ø 239 x 20 x 38.7	PR 1LG,1ZD				83044704	bore ø 17.5 ø 200 x 40	6K-X-610000→ PR 1KB,1KM ⊕ ABS →6K-X-609999
				PRO	92036803	ø 256 x 20 x 38.7	PR 1LY,1ZE,1ZK →6K-V-022628 6K-Y-502795→						6K-X-610000→
											84018205	bore ø 17.5 ø 180 x 31	PR 1KA ⊖ ABS
										PRO	92098203	ø 232 x 9 x 39.4	PR 1KK,1KT
										PRO	92154203	ø 226 x 10 x 71.5	
										PRO	92041803	ø 226 x 10 x 71.5	
											94022800	ø 200,0 x 50.5	6K-X-610000→ PR 1KB,1KM
											94006600	ø 180,0 x 38.5	PR 1KA ⊖ ABS
											94006700	ø 200,0 x 49.8	PR 1KB,1KM →6K-X-609999

POLO Kasten (6NF) 10/94→12/99 → POLO Box (6NF), Page 1257

POLO PLAYA 05/96→07/02

779100													
1.4	05/96→07/02	62 / 84	Kel		2088708	[–] 20887 17.3	→6K-W000500				91018200	ø 180 x 31	⊖ ABS
			VW		2186601	[–] 21866 15.3	6K-W000500→				91044700	ø 200 x 40	⊕ ABS
			VW		2186603	[–] 21866 19.7	⊕ ABS →6K-W000500 ⊕ reinf.brake →6K-W000500		Ate		97000500		⊖ ABS
			Kel		82026700		→6K-W000500		Ate		97006500		⊕ ABS
			Ate		82062900		→6K-W000500 ⊕ ABS				94006600	ø 180,0 x 38.5	⊖ ABS
				PRO	92009303	ø 239 x 10 x 38.6	→6K-W000500				94006700	ø 200,0 x 49.8	⊕ ABS
				PRO	92010603	ø 239 x 12 x 35	⊕ ABS →6K-W000500 ⊕ reinf.brake →6K-W000500						
				PRO	92012103	ø 239 x 20 x 38.7	6K-W000500→						

POLO Saloon (6KV2) 11/95→07/05 → POLO CLASSIC (6KV2), Page 1258

POLO Saloon (9A4) 08/96→

779200													
1.0	08/96→12/01	37 / 50	Ate		2313001	[–] 23130 19.7	PR 1LG		Luc		2355402	[–] 23554 17.2	PR 1KS,1KK,1KT
1.0	02/03→10/03	58 / 79											
1.4	12/03→05/05	63 / 86	Ate	epad	2313081	[–] 23130 19.7	PR 1LG		Luc	epad	2355481	[–] 23554 17.2	PR 1KS,1KK,1KT
1.4 TDI	07/03→	55 / 75	Ate		2313101	[+] 23131 19.7	PR 1ZG		Luc		82037300		PR 1KS,1KK,1KT
			Ate	epad	2313181	[+] 23131 19.7	PR 1ZG				91044700	ø 200 x 40	PR 1KB,1KM
			Ate		82062900				Ate		97006500		PR 1KB,1KM
				PRO	92082203	ø 256 x 22 x 36.5	PR 1LG,1ZG				83044701	bore ø 19 ø 200 x 40	PR 1KN
											84044703	bore ø 19 ø 200 x 40	PR 1KN
											84044706	bore ø 17.5 ø 200 x 40	PR 1KB
										PRO	92082503	ø 232 x 9 x 39.3	PR 1KS,1KK,1KT
779300													
1.4	07/03→	55 / 75	Ate		2313001	[–] 23130 19.7	PR 1LG		Luc		2355402	[–] 23554 17.2	PR 1KS,1KK,1KT
			Ate	epad	2313081	[–] 23130 19.7	PR 1LG		Luc	epad	2355481	[–] 23554 17.2	PR 1KS,1KK,1KT
			Ate		2313101	[+] 23131 19.7	PR 1ZG		Luc		82037300		PR 1KS,1KK,1KT
			Ate	epad	2313181	[+] 23131 19.7	PR 1ZG				91044700	ø 200 x 40	PR 1KB,1KM
			Ate		82062900				Ate		97006500		PR 1KB,1KM
				PRO	92082203	ø 256 x 22 x 36.5	PR 1LG,1ZG				83044701	bore ø 19 ø 200 x 40	PR 1KB,1KM
											84044703	bore ø 19 ø 200 x 40	PR 1KN
											84044706	bore ø 17.5 ø 200 x 40	PR 1KB

T - Z

		kW / hp											
POLO Saloon (9A4) 08/96→													
		779300											
1.4	07/03→	55 / 75											
										92082503	ø 232 x 9 x 39.3	PR 1KS,1KK,1KT
		779400	Ate	2313001	[–] 23130 19.7	PR 1LG	Luc	2355402	[–] 23554 17.2	PR 1KS,1KK,1KT			
1.4	11/03→	74 / 101											
1.6	09/02→	74 / 101	Ate	2313081	[–] 23130 19.7	PR 1LG	Luc	2355481	[–] 23554 17.2	PR 1KS,1KK,1KT			
1.6 Total Flex	10/04→	74 / 101											
2.0	09/02→	85 / 115	Luc	2358101	[–] 23581 19	PR 1LN	Luc	82037300		PR 1KS,1KK,1KT			
			Ate	2313101	[+] 23131 19.7	PR 1ZG		91044700	ø 200 x 40	PR 1KB,1KM			
			Ate	2313181	[+] 23131 19.7	PR 1ZG	Ate	97006500		PR 1KB,1KM			
			Luc	2358102	[+] 23581 19	PR 1LN		83044701	bore ø 19 ø 200 x 40	PR 1KN			
			Luc	82055400		PR 1LN		84044703	bore ø 19 ø 200 x 40	PR 1KN			
			Ate	82062900				84044706	bore ø 17.5 ø 200 x 40	PR 1KB			
			Luc	82063500		PR 1LN		92082503	ø 232 x 9 x 39.3	PR 1KS,1KK,1KT			
				92082203	ø 256 x 22 x 36.5	PR 1LG,1ZG							
				92106603	ø 288 x 25 x 34.4								
		779500	Ate	2313001	[–] 23130 19.7	PR 1LG	Luc	2355402	[–] 23554 17.2	PR 1KS,1KK,1KT			
1.9 SDI	09/02→	47 / 64											
			Ate	2313081	[–] 23130 19.7	PR 1LG	Luc	2355481	[–] 23554 17.2	PR 1KS,1KK,1KT			
			Ate	2313101	[+] 23131 19.7	PR 1ZG	Luc	82037300		PR 1KS,1KK,1KT			
			Ate	2313181	[+] 23131 19.7	PR 1ZG		91044700	ø 200 x 40	PR 1KB,1KM			
			Ate	82062900			Ate	97006500		PR 1KB,1KM			
			Luc	82063500		PR 1LN		83044701	bore ø 19 ø 200 x 40	PR 1KN			
				92082203	ø 256 x 22 x 36.5	PR 1LG,1ZG		84044703	bore ø 19 ø 200 x 40	PR 1KN			
								84044706	bore ø 17.5 ø 200 x 40	PR 1KB			
								92082503	ø 232 x 9 x 39.3	PR 1KS,1KK,1KT			
		779600	Ate	2313001	[–] 23130 19.7	PR 1LG	Luc	2355402	[–] 23554 17.2	PR 1KS,1KK,1KT			
1.9 TDi	09/02→	74 / 101											
			Ate	2313081	[–] 23130 19.7	PR 1LG	Luc	2355481	[–] 23554 17.2	PR 1KS,1KK,1KT			
			Luc	2358101	[–] 23581 19	PR 1LN	Luc	82037300		PR 1KS,1KK,1KT			
			Ate	2313101	[+] 23131 19.7	PR 1ZG		91044700	ø 200 x 40	PR 1KB,1KM			
			Ate	2313181	[+] 23131 19.7	PR 1ZG	Ate	97006500		PR 1KB,1KM			
			Luc	2358102	[+] 23581 19	PR 1LN		83044701	bore ø 19 ø 200 x 40	PR 1KN			
			Luc	82055400		PR 1LN		84044703	bore ø 19 ø 200 x 40	PR 1KN			
			Ate	82062900				84044706	bore ø 17.5 ø 200 x 40	PR 1KB			
				92082203	ø 256 x 22 x 36.5	PR 1LG,1ZG		92082503	ø 232 x 9 x 39.3	PR 1KS,1KK,1KT			
				92106603	ø 288 x 25 x 34.4								
POLO Saloon 05/10→													
		779700	Ate	2313001	[–] 23130 19.7	PR 1ZG	Ate	91052400	ø 230 x 32	PR 1KC			
1.4	12/10→	63 / 85											
1.6	05/10→	77 / 105	Ate	2313081	[–] 23130 19.7	PR 1ZG	Ate	97011300		PR 1KC			
1.6	11/10→	63 / 86											
1.6 TDI	07/10→	77 / 105	TRW	2568101	[–] 25681 18	PR 1ZE		94024300	ø 230,0 x 39	PR 1KC			
				92082203	ø 256 x 22 x 36.5								
POLO Stufenheck (9A4) 08/96→ → POLO Saloon (9A4), Page 1260													
POLO Stufenheck 05/10→ → POLO Saloon, Page 1261													
POLO Variant (6KV5) 05/97→09/01													
		779800	Kel	2088708	[–] 20887 17.3	PR 1LA		91044700	ø 200 x 40	PR 1KB,1KM			
1.4	05/97→09/01	44 / 60											
1.4	12/98→09/01	40 / 54	VW	2186601	[–] 21866 15.3	PR 1LG,1ZD	Ate	97006500		PR 1KB,1KM			
1.6	05/97→09/01	55 / 75											
1.7 SDI	08/97→09/01	42 / 57											
1.9 SDI	06/97→09/01	47 / 64											

		kW / hp											
POLO Variant (6KV5) 05/97→09/01													
1.9 SDI	08/99→09/01	50 / 68	VW		2186603	[–] 21866 19.7	PR 1LM			83044701	bore ø 19 ø 200 x 40	PR 1KM
			Kel		82026700		PR 1LA			84044703	bore ø 19 ø 200 x 40	PR 1KM
			Ate		82062900		PR 1LM			84044706	bore ø 17.5 ø 200 x 40	PR 1KB
				PRO	92009303	ø 239 x 10 x 38.6	PR 1LA			94022800	ø 200,0 x 50.5	10/99→
				PRO	92010603	ø 239 x 12 x 35	PR 1LM			94006700	ø 200,0 x 49.8	
				PRO	92012103	ø 239 x 20 x 38.7	PR 1LG,1ZD					
		779900	Kel		2088708	[–] 20887 17.3	PR 1LA			91044700	ø 200 x 40	PR 1KB,1KM
1.4 16V	10/99→09/01	55 / 75	VW		2186601	[–] 21866 15.3	PR 1LG,1ZD	Ate		97006500		PR 1KB,1KM
			VW		2186603	[–] 21866 19.7	PR 1LM			83044701	bore ø 19 ø 200 x 40	PR 1KM
			Kel		82026700		PR 1LA			84044703	bore ø 19 ø 200 x 40	PR 1KM
			Ate		82062900		PR 1LM			84044706	bore ø 17.5 ø 200 x 40	PR 1KB
				PRO	92009303	ø 239 x 10 x 38.6	PR 1LA			94022800	ø 200,0 x 50.5	
				PRO	92010603	ø 239 x 12 x 35	PR 1LM			94006700	ø 200,0 x 49.8	
				PRO	92012103	ø 239 x 20 x 38.7	PR 1LG,1ZD					
		780000	Luc		2194502	[–] 21945 16.2				91044700	ø 200 x 40	PR 1KB,1KM
1.6	05/97→09/01	74 / 101										
1.8	05/97→09/01	66 / 90										
1.9 TDI	05/97→09/01	66 / 90	Luc		82062800			Ate		97006500		
				PRO	92036803	ø 256 x 20 x 38.7				83044701	bore ø 19 ø 200 x 40	PR 1KM
										84044703	bore ø 19 ø 200 x 40	PR 1KM
										84044706	bore ø 17.5 ø 200 x 40	PR 1KB
										94022800	ø 200,0 x 50.5	10/99→
										94006700	ø 200,0 x 49.8	
		780100	Luc		2194502	[–] 21945 16.2		Luc		2355402	[–] 23554 17.2	
1.9 TDI	06/98→09/01	81 / 110	Luc		82062800		PR 1LY, 1ZE, 1ZK	Luc	epad	2355481	[–] 23554 17.2	
				PRO	92036803	ø 256 x 20 x 38.7		Luc		82033000		PR 1KK,1KT
								Luc		82062800		PR 1KK,1KT
									PRO	92098203	ø 232 x 9 x 39.4	
POLO VIVO Hatchback 02/10→													
		780200	Ate		2313001	[–] 23130 19.7				91044700	ø 200 x 40	
1.4	02/10→	55 / 75	Ate	epad	2313081	[–] 23130 19.7		Ate		97006500		
			Ate		82062900					84044703	bore ø 19 ø 200 x 40	
				PRO	92082203	ø 256 x 22 x 36.5				94023800	ø 200,0 x 50.5	
					TPM0008							
POLO VIVO Saloon 02/10→													
		780300	Ate		2313001	[–] 23130 19.7	PR 1ZG	Ate		91052400	ø 230 x 32	PR 1KC
1.4	02/10→	55 / 75	Ate	epad	2313081	[–] 23130 19.7	PR 1ZG	Ate		97011300		PR 1KC
			TRW		2568101	[–] 25681 18	PR 1ZE			94024300	ø 230,0 x 39	PR 1KC
				PRO	92082203	ø 256 x 22 x 36.5						
POLO VIVO Schrägheck 02/10→ → POLO VIVO Hatchback, Page 1262													
POLO VIVO Stufenheck 02/10→ → POLO VIVO Saloon, Page 1262													
QUANTUM 08/90→07/05													
		780400	Luc		2016801	[–] 20168 16.2		Luc		2355401	[–] 23554 15.2	→31-PE080000 →31-PB080000
2.0	08/90→07/05	82 / 111										
2.0 Hybrid	08/90→07/05	87 / 118										

T - Z

QUANTUM 08/90→07/05

		kW / hp												
		780400	Luc		82062800			Luc		2355402	[–] 23554	17.2	31-PE080001→ 31-PB080001→	
2.0	08/90→07/05	82 / 111												
2.0 Hybrid	08/90→07/05	87 / 118		PRO	92036803	ø 256 x 20 x 38.7		Luc	epad	2355481	[–] 23554	17.2	31-PE080001→ 31-PB080001→	
								Luc	epad	2355482	[–] 23554	15.2	→31-PE080000 →31-PB080000	
								Luc		82033000				
								Luc		82062800				
									PRO	92154203	ø 226 x 10 x 71.5			
									PRO	92041803	ø 226 x 10 x 71.5			

RABBIT V (1K1) 10/03→02/09 → GOLF V (1K1), Page 1220

ROUTAN 09/08→12/11

		780500	Bos		2460402	[+] 24604	17.5	⊖ reinf.brake	Luc		2482201	[+] 24822	17	⊖ reinf.brake
3.6	01/11→	196 / 267												
3.6	01/11→	208 / 283	Ake		2537801	[+] 25378	18.1	⊕ reinf.brake	TRW		2537601	[+] 25376	17.6	⊕ reinf.brake
										PRO	92181003	ø 305 x 12 x 33		
		780600	Bos		2460402	[+] 24604	17.5		Luc		2482201	[+] 24822	17	
3.6 Flexfuel	09/10→12/11	211 / 287												
3.8	09/08→12/10	145 / 197								PRO	92181003	ø 305 x 12 x 33		
3.8	09/08→12/10	147 / 200												
4.0	09/08→12/10	185 / 251												
4.0	09/08→12/10	187 / 254												

SAVEIRO Pickup 09/09→

		780700			TPM0008				Ate		91052400	ø 230 x 32		
1.6	09/09→	74 / 101												
1.6 Total Flex	09/09→	74 / 101												

SAVEIRO Pick-up 09/09→ → SAVEIRO Pickup, Page 1263

SAVEIRO Platform/Chassis 08/96→09/03

		780800	Var		2354601	[–] 23546	16	Varga						
1.6	08/96→02/02	55 / 75												
1.6	11/96→09/03	65 / 88	Ate		2196202	[–] 21962	15	Teves						
1.6	07/97→01/00	73 / 99												
1.6	02/98→09/01	57 / 78												
1.6	07/99→02/02	66 / 90												
1.6 D	09/97→02/02	40 / 54												
1.8	08/96→02/02	66 / 90												
1.8	08/96→02/02	73 / 99												
1.8	07/97→01/00	75 / 102												
1.8	12/97→07/01	72 / 98												
1.8 Alcohol	08/96→02/02	73 / 99												
1.8 Alcohol	07/97→01/01	75 / 102												
1.9 D	02/98→02/02	47 / 64												

SAVEIRO Platform/Chassis 03/02→

		780900	Var		2354601	[–] 23546	16	Varga						
1.6	03/02→	68 / 92												
1.6 Flex	03/02→	73 / 99	Ate		2196202	[–] 21962	15	Teves						
1.6 Flex	05/03→08/09	73 / 99												
1.6 Flex	09/09→	74 / 101												
1.6 Total Flex	05/03→08/09	71 / 97												
1.6 Total Flex	02/05→08/09	76 / 103												
1.6 Total Flex	03/05→	70 / 95												
1.6 Total Flex	09/09→	74 / 101												
1.8	03/02→	70 / 95												
1.8	03/02→	73 / 99												
1.8 Flex	02/05→08/09	78 / 106												
1.8 Flex	03/06→	70 / 95												
2.0	03/02→	82 / 112												

SAVEIRO Pritsche/Fahrgestell 08/96→09/03 → SAVEIRO Platform/Chassis, Page 1263

SAVEIRO Pritsche/Fahrgestell 03/02→ → SAVEIRO Platform/Chassis, Page 1263

SCIROCCO (137, 138) 05/08→

		781000	Ate		2358701	[+] 23587	20.3		Luc		2355402	[–] 23554	17.2	
1.4 TSI	05/08→	118 / 160												
2.0 TDI	05/09→	125 / 170	Ate		2358781	[+] 23587	20.3		Luc	epad	2355481	[–] 23554	17.2	
2.0 TDI	01/13→	130 / 177		epad										
2.0 TSI	05/08→11/09	147 / 200	Ate		82062900				Luc		82037300			
2.0 TSI	11/09→05/11	155 / 210												
			Ate		82076800					PRO	92120903	ø 255 x 10 x 51.6		
				PRO	92120503	ø 312 x 25 x 49.7								
		781100	Ate		2358701	[+] 23587	20.3		Luc		2355402	[–] 23554	17.2	
1.4 TSI	08/08→	90 / 122												
2.0 TDI	08/08→	103 / 140	Ate		2358781	[+] 23587	20.3		Luc	epad	2355481	[–] 23554	17.2	
2.0 TDI	11/10→	100 / 136		epad										
			Ate		82062900				Luc		82037300			
			Ate		82076800									

T - Z

30 kW / hp

SCIROCCO (137, 138) 05/08→

781100														
1.4 TSI	08/08→	90 / 122		PRO	92120803	ø 288 x 25 x 49.8			PRO	92120903	ø 255 x 10 x 51.6	
2.0 TDI	08/08→	103 / 140		PRO	92120805	ø 288 x 25 x 49.8						
2.0 TDI	11/10→	100 / 136										
781200			Ate		2358701	[+] 23587 20.3	PR 1ZE,1ZP,1ZA PR 1ZD,1ZB	Luc		2355402	[–] 23554 17.2	PR 1KD
1.4 TSI	11/13→	92 / 125	Ate	epad	2358781	[+] 23587 20.3	PR 1ZE,1ZP,1ZA PR 1ZD,1ZB	Luc	epad	2355481	[–] 23554 17.2	PR 1KD
2.0 TDI	11/13→	110 / 150	Ate		2391301	[+] 23913 20.3	PR 1ZK	Bos		2456301	[–] 24563 17.7	PR 1KS,1KT
2.0 TSI	11/13→	132 / 180	Ate		82076800		PR 1ZE,1ZP,1ZA PR 1ZD,1ZB	Luc		2391401	[o] 23914 17.2	PR 1KW
2.0 TSI	11/13→	162 / 220	Luc		82518200		PR 1ZK	Luc	epad	2391481	[o] 23914 17.2	PR 1KW
				PRO	92120503	ø 312 x 25 x 49.7	PR 1ZA,1ZD,1ZB	Bos		82054300		PR 1KS,1KT
				PRO	92120603	ø 345 x 30 x 49.9	PR 1ZK	Luc		82502000		PR 1KW
				PRO	92120803	ø 288 x 25 x 49.8	PR 1ZE,1ZP	Luc		82509000		PR 1KD
				PRO	92120805	ø 288 x 25 x 49.8	PR 1ZE,1ZP		PRO	92120903	ø 255 x 10 x 51.6	PR 1KD
					TPM0008				PRO	92224903	ø 272 x 10 x 48.3	PR 1KS,1KT
									PRO	92140703	ø 310 x 22 x 48.5	PR 1KW
										TPM0008		
781300			Ate		2391301	[+] 23913 20.3		Luc		2391402	[o] 23914 17.2	
2.0 R	11/09→	188 / 256	Ate		82062900			Luc	epad	2391482	[o] 23914 17.2	
2.0 R	11/09→	195 / 265	Luc		82518200			Luc		82502000		
				PRO	92120603	ø 345 x 30 x 49.9			PRO	92140703	ø 310 x 22 x 48.5	

SHARAN (7M8, 7M9, 7M6) 09/95→03/10

781400			Ate		2184802	[–] 21848 19.7	→04/00	Luc		2355402	[–] 23554 17.2	→04/00
1.8 T 20V	09/97→03/10	110 / 150	Ate		2184903	[+] 21849 20.6	05/00→ →7M-1-070000	Luc	epad	2355481	[–] 23554 17.2	→04/00
			Ate		2326903	[+] 23269 20.1	7M-2-000001→	Luc		2344605	[+] 23446 16.5	7M-2-000001→
			Ate		82029300		→7M-1-070000	Luc		2355403	[+] 23554 17.2	05/00→ →7M-1-070000
			Ate		82062900			Luc		82037300		
					92109900	ø 313 x 26 x 56.2	7M-2-000001→ 70-1-000955→	Luc		82059600		7M-2-000001→
				PRO	92074203	ø 288 x 25 x 55.3	→7M-1-070000	Luc		82062800		
				PRO	92109903	ø 313 x 26 x 56.2	7M-2-000001→ 70-1-000955→	Luc		82063300		7M-2-000001→
									PRO	92074303	ø 268 x 10 x 45.7	→7M-1-070000
									PRO	92098103	ø 294 x 13.5 x 41	7M-2-000001→
781500			Ate		2184802	[–] 21848 19.7	→04/00	Luc		2355402	[–] 23554 17.2	→04/00
1.9 TDI	09/95→03/10	66 / 90	Ate		2184903	[+] 21849 20.6	05/00→ →7M-1-070000	Luc	epad	2355481	[–] 23554 17.2	→04/00
2.0	09/95→03/10	85 / 115	Ate		2341801	[+] 23418 19.6	7M-2-000001→	Luc		2355403	[+] 23554 17.2	05/00→
			Ate		82029300		→7M-1-070000	Luc		82037300		
			Ate		82062900			Luc		82062800		
			Ate		82508900		7M-2-000001→		PRO	92074303	ø 268 x 10 x 45.7	
				PRO	92074203	ø 288 x 25 x 55.3	→7M-1-070000					
				PRO	92109803	ø 300 x 26 x 56	7M-2-000001→					
781600			Ate		2184802	[–] 21848 19.7		Luc		2355402	[–] 23554 17.2	
1.9 TDI	09/96→04/00	81 / 110	Ate		82029300			Luc	epad	2355481	[–] 23554 17.2	
			Ate		82062900			Luc		82037300		

T - Z

SHARAN (7M8, 7M9, 7M6) 09/95→03/10

		kW / hp											
1.9 TDI	09/96→04/00	781600 81 / 110		PRO	92074203	ø 288 x 25 x 55.3	→7M-1-070000	Luc		82062800		
				PRO	92074303	ø 268 x 10 x 45.7						
1.9 TDI	04/00→03/10	781700 85 / 115	Ate		2184903	[+] 21849 20.6	→7M-1-070000	Luc		2355403	[+] 23554 17.2	
			Ate		2341801	[+] 23418 19.6	7M-2-000001→	Luc		82037300		
			Ate		82029300		→7M-1-070000	Luc		82062800		
			Ate		82062900				PRO	92074303	ø 268 x 10 x 45.7	
			Ate		82508900		7M-2-000001→					
				PRO	92074203	ø 288 x 25 x 55.3	→7M-1-070000					
				PRO	92109803	ø 300 x 26 x 56	7M-2-000001→					
1.9 TDI	11/02→03/10	781800 96 / 130	Ate		2184903	[+] 21849 20.6	→7M-1-070000	Luc		2355403	[+] 23554 17.2	
1.9 TDI	06/05→03/10	110 / 150	Ate		2326903	[+] 23269 20.1	PR MC0,MG8,D3A	Luc		82037300		PR MF7,ML1,M3L,D3E
			Ate		2341801	[+] 23418 19.6	7M-2-000001→	Luc		82062800		PR MF7,ML1,M3L,D3E
			Ate		82029300		→7M-1-070000		PRO	92074303	ø 268 x 10 x 45.7	PR MF7,ML1,M3L,D3E
			Ate		82062900				PRO	92098103	ø 294 x 13.5 x 41	PR MC0,MG8,D3A
			Ate		82508900		7M-2-000001→					
					92109900	ø 313 x 26 x 56.2	PR MC0,MG8,D3A					
				PRO	92074203	ø 288 x 25 x 55.3	→7M-1-070000					
				PRO	92109803	ø 300 x 26 x 56	PR MF7,ML1,M3L,D3E					
				PRO	92109903	ø 313 x 26 x 56.2	PR MC0,MG8,D3A					
1.9 TDI 4motion	04/00→03/10	781900 85 / 115	Ate		2184802	[–] 21848 19.7	→04/00	Luc		2355402	[–] 23554 17.2	→04/00
			Ate		2326903	[+] 23269 20.1	05/00→	Luc	epod	2355481	[–] 23554 17.2	→04/00
			Ate		82029300			Luc		2344605	[+] 23446 16.5	05/00→
			Ate		82062900			Luc		82037300		→04/00
					92109900	ø 313 x 26 x 56.2	05/00→	Luc		82059600		05/00→
				PRO	92074203	ø 288 x 25 x 55.3	→04/00	Luc		82062800		→04/00
				PRO	92109903	ø 313 x 26 x 56.2	05/00→	Luc		82063300		05/00→
									PRO	92074303	ø 268 x 10 x 45.7	→04/00
									PRO	92098103	ø 294 x 13.5 x 41	05/00→
2.0 16V	09/95→02/00	782000 110 / 150	Ate		2184802	[–] 21848 19.7		Luc		2355402	[–] 23554 17.2	
2.8 VR6	09/95→04/00	128 / 174										
2.8 VR6 Syncro	11/96→04/00	128 / 174	Ate		82029300			Luc	epod	2355481	[–] 23554 17.2	
			Ate		82062900			Luc		82037300		
				PRO	92074203	ø 288 x 25 x 55.3		Luc		82062800		
									PRO	92074303	ø 268 x 10 x 45.7	
2.0 LPG	04/06→03/10	782100 85 / 115	Ate		2326903	[+] 23269 20.1	PR MC0,MG8,D3A	Luc		2355403	[+] 23554 17.2	
2.0 TDI	11/05→03/10	100 / 136										
2.0 TDI	11/05→03/10	103 / 140	Ate		2341801	[+] 23418 19.6	PR MF7,ML1,M3L,D3E	Luc		82037300		PR MF7,ML1,M3L,D3E
			Ate		82062900				PRO	92074303	ø 268 x 10 x 45.7	PR MF7,ML1,M3L,D3E
			Ate		82508900		PR MF7,ML1,M3L,D3E		PRO	92098103	ø 294 x 13.5 x 41	PR MC0,MG8,D3A
					92109900	ø 313 x 26 x 56.2	PR MC0,MG8,D3A					
				PRO	92109803	ø 300 x 26 x 56	PR MF7,ML1,M3L,D3E					
				PRO	92109903	ø 313 x 26 x 56.2	PR MC0,MG8,D3A					

		kW / hp											
SHARAN (7M8, 7M9, 7M6) 09/95→03/10													
782200			Ate		2326903	[+] 23269 20.1		Luc		2344605	[+] 23446 16.5	
2.8 V6 24V	04/00→03/10	150 / 204										
2.8 V6 24V 4motion	04/00→03/10	150 / 204	Ate		82029300			Luc		82059600		
			Ate		82062900			Luc		82063300		
					92109900	ø 313 x 26 x 56.2			PRO	92098103	ø 294 x 13.5 x 41	
				PRO	92109903	ø 313 x 26 x 56.2						
SHARAN (7N) 05/10→													
782300			Ate		2433301	[+] 24333 20.6	Ø 312 mm PR 1LJ	Luc		2448301	[–] 24483 17.2	
1.4 TSI	05/10→	110 / 150										
2.0 TDI	05/10→	100 / 136	TRW		2473801	[+] 24738 20	Ø 314 mm PR 1LX,1LW	Luc	epad	2448381	[–] 24483 17.2	
2.0 TDI	05/10→	103 / 140										
2.0 TDI	05/11→	85 / 116	Ate		82076800		Ø 312 mm PR 1LJ	Luc		82509000		
				PRO	92120503	ø 312 x 25 x 49.7	PR 1LJ		PRO	92140803	ø 282 x 12 x 48.5	
				PRO	92232403	ø 314 x 30 x 49.6	PR 1LW,1LX			TPM0008		
					TPM0008							
782400			TRW		2473801	[+] 24738 20		Luc		2448301	[–] 24483 17.2	
2.0 TDI	08/10→	125 / 170										
2.0 TDI 4motion	05/11→	103 / 140		PRO	92232403	ø 314 x 30 x 49.6		Luc	epad	2448381	[–] 24483 17.2	
2.0 TDI 4motion	05/11→05/12	100 / 136										
2.0 TSI	12/10→	147 / 200			TPM0008			Luc		82509000		
									PRO	92140803	ø 282 x 12 x 48.5	
										TPM0008		
782500			Ate		2433301	[+] 24333 20.6	PR 1LJ	Luc		2448301	[–] 24483 17.2	
2.0 TDI	01/13→	130 / 177										
			TRW		2473801	[+] 24738 20	PR 1LW,1LX	Luc	epad	2448381	[–] 24483 17.2	
			Ate		82076800		PR 1LJ	Luc		82509000		
				PRO	92120503	ø 312 x 25 x 49.7	PR 1LJ		PRO	92140803	ø 282 x 12 x 48.5	
				PRO	92232403	ø 314 x 30 x 49.6	PR 1LW,1LX			TPM0008		
					TPM0008							
SPACEFOX / SPACE CROSS (5Z6, 5Z7) 03/06→													
782600			Ate		2313001	[–] 23130 19.7	PR 1LG,1LR,1ZF Ø 256 mm			91044700	ø 200 x 40	PR 1KB
1.6	03/06→	74 / 101										
1.6 Total Flex	03/06→	74 / 101	Ate	epad	2313081	[–] 23130 19.7	PR 1LG,1LR,1ZF Ø 256 mm	Ate		97006500		PR 1KB
1.9 SDI	09/07→	47 / 64	VW		2186602	[–] 21866 17.2	PR 1LA,1LM,1ZN Ø 239 mm			94023800	ø 200,0 x 50.5	PR 1KB
			Ate		82029300		PR 1ZN					
			Ate		82062900							
				PRO	92082203	ø 256 x 22 x 36.5	PR 1LG,1LR,1ZF					
				PRO	92106803	ø 239 x 18 x 34.9	PR 1LA,1LM,1ZN					
SUPER BEETLE 09/92→08/03 → KAEFER, Page 1234													
SURAN (5Z6, 5Z7) 03/06→ → SPACEFOX / SPACE CROSS (5Z6, 5Z7), Page 1266													
TIGUAN (5N_) 09/07→													
782700			Ate		2433301	[+] 24333 20.6	→09/12	Luc		2448301	[–] 24483 17.2	
1.4 TSI	05/08→	110 / 150										
1.4 TSI	08/10→	90 / 122	Ate		2433401	[+] 24334 20	10/12→	Luc	epad	2448381	[–] 24483 17.2	
1.4 TSI	05/11→	118 / 160										
1.4 TSI 4motion	05/11→	118 / 160										
2.0 TDI	03/08→	103 / 140	Ate		82062900			Luc		82509000		
2.0 TDI	05/10→	81 / 110										
2.0 TDI 4motion	09/07→	103 / 140										
2.0 TDI 4motion	09/07→	125 / 170	Ate		82076800			Luc		82063300		
2.0 TDI 4motion	11/07→	100 / 136										
2.0 TFSI 4motion	09/07→	125 / 170		PRO	92120503	ø 312 x 25 x 49.7			PRO	92140803	ø 282 x 12 x 48.5	
2.0 TFSI 4motion	09/07→	147 / 200										
2.0 TSI 4motion	05/11→	132 / 180			TPM0008					TPM0008		
2.0 TSI 4motion	05/11→	155 / 211										
782800			Ate		2433301	[+] 24333 20.6	→09/12	Luc		2448301	[–] 24483 17.2	
1.4 TSI 4motion	09/07→	110 / 150										

T - Z

TIGUAN (5N_) 09/07→

1.4 TSI 4motion	09/07→	782800 110 / 150	Ate	2433401	[+] 24334 20	→10/12	Luc	2448381	[–] 24483 17.2	
			Ate	82062900			Luc	82509000		
			Ate	82076800			Luc	82063300		
				92120503	ø 312 x 25 x 49.7			92140803	ø 282 x 12 x 48.5	
				TPM0008				TPM0008		
2.0 TDI 4motion 2.0 TFSI 2.0 TFSI	02/08→08/09 11/07→ 05/08→	782900 120 / 163 147 / 200 125 / 170	Ate	2433301	[+] 24333 20.6		Luc	2448301	[–] 24483 17.2	
			Ate	82062900			Luc	2448381	[–] 24483 17.2	
			Ate	82076800			Luc	82509000		
				92120503	ø 312 x 25 x 49.7		Luc	82063300		
				TPM0008				92140803	ø 282 x 12 x 48.5	
								TPM0008		
2.0 TDI 4motion	11/12→	783000 130 / 177	Ate	2433401	[+] 24334 20		Luc	2448301	[–] 24483 17.2	
			Ate	82062900			Luc	2448381	[–] 24483 17.2	
			Ate	82076800			Luc	82509000		
				92120503	ø 312 x 25 x 49.7		Luc	82063300		
				TPM0008				92140803	ø 282 x 12 x 48.5	
								TPM0008		

TOUAREG (7LA, 7L6, 7L7) 10/02→05/10

2.5 R5 TDI 2.5 R5 TDI	01/03→05/10 08/03→05/10	783100 128 / 174 120 / 163	Ate	2346901	[+] 23469 20.1		Ate	2436701	[+] 24367 19	
			Ate	2374901	[+] 23749 18.8		Ate	82062900		
			Ate	82062900			Ate	82077100		
			Ate	82076900				92121903	ø 314 x 22 x 75.9	
				92121203	ø 308 x 29.5 x 55.6			91058700	ø 185 x 30	
								97032200		
3.0 TDI	04/06→05/10	783200 155 / 211	Bre	2409801	[o] 24098 17.1		Bre	2369402	[o] 23694 16.7	Brembo PR 1KF Ø 330 mm
				98030900	L420		Bre	2369481	[o] 23694 16.7	Brembo PR 1KF Ø 330 mm
			Bre	82077400			Bre	2409701	[o] 24097 17.1	Brembo PR 1KQ Ø 330 mm
				92121500	ø 330 x 32 x 68.5	left		98031000	L255	
				92121600	ø 330 x 32 x 68.5	right	Bre	82076600		Brembo PR 1KF Ø 330 mm
				92121505	ø 330 x 32 x 68.5	left	Bre	82077500		Brembo PR 1KQ Ø 330 mm
				92121605	ø 330 x 32 x 68.5	right		92122000	ø 330 x 28 x 73.5	
				TPM0005				92122005	ø 330 x 28 x 73.5	
								TPM0005		
								91062400	ø 210 x 30	
								97032200		
3.0 V6 TDI	11/04→05/10	783300 165 / 225	Bre	2409801	[o] 24098 17.1		Bre	2369402	[o] 23694 16.7	Brembo PR 1KF Ø 330 mm
				98030900	L420		Bre	2369481	[o] 23694 16.7	Brembo PR 1KF Ø 330 mm
			Bre	82077400			Bre	2409701	[o] 24097 17.1	Brembo PR 1KQ Ø 330 mm
				92121500	ø 330 x 32 x 68.5	left		98031000	L255	Brembo
				92121600	ø 330 x 32 x 68.5	right	Bre	82076600		Brembo PR 1KF Ø 330 mm

T - Z

TOUAREG (7LA, 7L6, 7L7) 10/02→05/10

783300														
3.0 V6 TDI	11/04→05/10	165 / 225		PRO	92121505	ø 330 x 32 x 68.5	left		Bre		82077500		Brembo PR 1KΩ Ø 330 mm
				PRO	92121605	ø 330 x 32 x 68.5	right				92122000	ø 330 x 28 x 73.5	
					TPM0005					PRO	92122005	ø 330 x 28 x 73.5	
											TPM0005		
											91062400	ø 210 x 30	
											97032200		
783400														
3.0 V6 TDI	11/07→05/10	176 / 240	Bre		2409801	[o] 24098 17.1			Bre		2369402	[o] 23694 16.7	
					98030900	L420			Bre	epad	2369481	[o] 23694 16.7	
			Bre		82077400						98031000	L255	
					92121500	ø 330 x 32 x 68.5	left		Bre		82076600		
					92121600	ø 330 x 32 x 68.5	right				92122000	ø 330 x 28 x 73.5	
				PRO	92121505	ø 330 x 32 x 68.5	left			PRO	92122005	ø 330 x 28 x 73.5	
				PRO	92121605	ø 330 x 32 x 68.5	right				TPM0005		
					TPM0005						91062400	ø 210 x 30	
											97032200		
783500														
3.2 V6	10/02→11/06	162 / 220	Bre		2369202	[o] 23692 16.7	Brembo PR 1LC Ø 330 mm		Bre		2369402	[o] 23694 16.7	PR 1KF Ø 330 mm
			Bre	epad	2369281	[o] 23692 16.7	Brembo PR 1LC Ø 330 mm		Bre	epad	2369481	[o] 23694 16.7	PR 1KF Ø 330 mm
			Bre		2409801	[o] 24098 17.1	PR 1LE Ø 330 mm		Bre		2409701	[o] 24097 17.1	PR 1KΩ Ø 330 mm
					98030900	L420					98031000	L255	
			Bre		82076500		PR 1LC Ø 330 mm		Bre		82076600		PR 1KF Ø 330 mm
			Bre		82077400		PR 1LE Ø 330 mm		Bre		82077500		PR 1KΩ Ø 330 mm
					92121500	ø 330 x 32 x 68.5	left				92122000	ø 330 x 28 x 73.5	
					92121600	ø 330 x 32 x 68.5	right			PRO	92122005	ø 330 x 28 x 73.5	
				PRO	92121505	ø 330 x 32 x 68.5	left				TPM0005		
				PRO	92121605	ø 330 x 32 x 68.5	right				91062400	ø 210 x 30	
					TPM0005						97032200		
783600														
3.2 V6	11/04→11/06	177 / 241	Bre		2369202	[o] 23692 16.7	Brembo PR 1LC Ø 330 mm		Bre		2369402	[o] 23694 16.7	PR 1KF Ø 330 mm
			Bre	epad	2369281	[o] 23692 16.7	Brembo PR 1LC Ø 330 mm		Bre	epad	2369481	[o] 23694 16.7	PR 1KF Ø 330 mm
			Bre		2369302	[o] 23693 16.7	PR 1LF Ø 350 mm		Bre		2409701	[o] 24097 17.1	PR 1KΩ Ø 330 mm
			Bre	epad	2369381	[o] 23693 16.7	PR 1LF Ø 350 mm		Bre		2461401	[o] 24614 16.6	PR 1KD,2ED Ø 358 mm
			Bre		2409801	[o] 24098 17.1	PR 1LE Ø 330 mm				98031000	L255	
			Bre		2455301	[o] 24553 16.1	PR 1LT,1LU Ø 368 mm		Bre		82076600		PR 1KF Ø 330 mm
					98030900	L420	PR 1LC;1LE,1LF		Bre		82077500		PR 1KΩ Ø 330 mm
					98034900	L370	PR 1LU,1LT				92122000	ø 330 x 28 x 73.5	PR 1KF,1KΩ
					98038800	L370	PR 1LU,1LT			PRO	92122005	ø 330 x 28 x 73.5	PR 1KF,1KΩ
			Bre		82076500		PR 1LF Ø 350 mm PR 1LC Ø 330 mm			PRO	92151403	ø 358 x 28 x 73.5	PR 2ED,1KD
			Bre		82077400		PR 1LE Ø 330 mm				TPM0005		
					92121500	ø 330 x 32 x 68.5	left PR 1LC,1LE				91058700	ø 185 x 30	PR 1KE
					92121600	ø 330 x 32 x 68.5	right PR 1LC,1LE				91062400	ø 210 x 30	PR 1KF,1KΩ
					92121700	ø 350 x 34 x 68.8	left PR 1LF				97032200		

TOUAREG (7LA, 7L6, 7L7) 10/02→05/10

		kW / hp											
3.2 V6	11/04→11/06	783600 177 / 241		92121800	ø 350 x 34 x 68.8	right PR 1LF							
				92121505	ø 330 x 32 x 68.5	left PR 1LC,1LE							
				92121605	ø 330 x 32 x 68.5	right PR 1LC,1LE							
				92121705	ø 350 x 34 x 68.8	left							
				92121805	ø 350 x 34 x 68.8	right PR 1LF							
				92213603	ø 368 x 36 x 68.6	PR 1LU,1LT							
				TPM0005									
3.6 V6 FSI	10/05→05/10	783700 206 / 280	Bre	2369202	[o] 23692 16.7	Brembo PR 1LC Ø 330 mm	Bre	2369402	[o] 23694 16.7	PR 1KF Ø 330 mm			
			Bre	2369281	[o] 23692 16.7	Brembo PR 1LC Ø 330 mm	Bre	2369481	[o] 23694 16.7	PR 1KF Ø 330 mm			
			Bre	2369302	[o] 23693 16.7	PR 1LF Ø 350 mm	Bre	2409701	[o] 24097 17.1	PR 1KΩ Ø 330 mm			
			Bre	2369381	[o] 23693 16.7	PR 1LF Ø 350 mm	Bre	2461401	[o] 24614 16.6	PR 1KD,2ED Ø 358 mm			
			Bre	2409801	[o] 24098 17.1	PR 1LE Ø 330 mm		98031000	L255				
			Bre	2455301	[o] 24553 16.1	PR 1LT,1LU Ø 368 mm	Bre	82076600		PR 1KF Ø 330 mm			
				98030900	L420	PR 1LC;1LE,1LF	Bre	82077500		PR 1KΩ Ø 330 mm			
				98034900	L370	PR 1LU,1LT		92122000	ø 330 x 28 x 73.5	PR 1KF,1KΩ			
				98038800	L370	PR 1LU,1LT		92122005	ø 330 x 28 x 73.5	PR 1KF,1KΩ			
			Bre	82076500		PR 1LF Ø 350 mm PR 1LC Ø 330 mm		92151403	ø 358 x 28 x 73.5	PR 2ED,1KD			
			Bre	82077400		PR 1LE Ø 330 mm		TPM0005					
				92121500	ø 330 x 32 x 68.5	left PR 1LC,1LE		91058700	ø 185 x 30	PR 1KE			
				92121600	ø 330 x 32 x 68.5	right PR 1LC,1LE		91062400	ø 210 x 30	PR 1KF,1KΩ			
				92121700	ø 350 x 34 x 68.8	left PR 1LF		97032200					
				92121800	ø 350 x 34 x 68.8	right PR 1LF							
				92121505	ø 330 x 32 x 68.5	left PR 1LC,1LE							
				92121605	ø 330 x 32 x 68.5	right PR 1LC,1LE							
				92121705	ø 350 x 34 x 68.8	left PR 1LF							
				92121805	ø 350 x 34 x 68.8	right PR 1LF							
				92213603	ø 368 x 36 x 68.6	PR 1LU,1LT							
				TPM0005									
4.2 V8	12/02→11/06	783800 228 / 310	Bre	2369202	[o] 23692 16.7		Bre	2369402	[o] 23694 16.7				
			Bre	2369281	[o] 23692 16.7		Bre	2369481	[o] 23694 16.7				
				98030900	L420			98031000	L255				
			Bre	82076500			Bre	82076600					
				92121500	ø 330 x 32 x 68.5	left		92122000	ø 330 x 28 x 73.5				
				92121600	ø 330 x 32 x 68.5	right		92122005	ø 330 x 28 x 73.5				
				92121505	ø 330 x 32 x 68.5	left		TPM0005					
				92121605	ø 330 x 32 x 68.5	right		91062400	ø 210 x 30				
				TPM0005				97032200					
4.2 V8 FSI 6.0 W12	06/06→05/10 08/04→05/10	783900 257 / 350 331 / 450	Bre	2369302	[o] 23693 16.7		Bre	2369402	[o] 23694 16.7				
			Bre	2369381	[o] 23693 16.7		Bre	2369481	[o] 23694 16.7				
				98030900	L420			98031000	L255				

T - Z

kW / hp

TOUAREG (7LA, 7L6, 7L7) 10/02→05/10

783900									Bre		82076600		
4.2 V8 FSI	06/06→05/10	257 / 350											
6.0 W12	08/04→05/10	331 / 450		92121700	ø 350 x 34 x 68.8	left				92122000	ø 330 x 28 x 73.5	
				92121800	ø 350 x 34 x 68.8	right				PRO 92122005	ø 330 x 28 x 73.5	
				PRO 92121705	ø 350 x 34 x 68.8	left				TPM0005		
				PRO 92121805	ø 350 x 34 x 68.8	right				91062400	ø 210 x 30	
				TPM0005						97032200		
784000			Bre	2455301	[o] 24553 16.1				Bre	2461401	[o] 24614 16.6	
5.0 R50 TDI	08/07→05/10	257 / 350		98034900	L370					98031000	L255	
				98038800	L370					PRO 92151403	ø 358 x 28 x 73.5	
				PRO 92213603	ø 368 x 36 x 68.6					TPM0005		
				TPM0005						91062400	ø 210 x 30	
										97032200		
784100			Bre	2369302	[o] 23693 16.7	PR 1LF Ø 350 mm			Bre	2369402	[o] 23694 16.7	PR 1KF Ø 330 mm
5.0 V10 TDI	10/02→05/10	230 / 313	Bre	epad 2369381	[o] 23693 16.7	PR 1LF Ø 350 mm			Bre	epad 2369481	[o] 23694 16.7	PR 1KF Ø 330 mm
			Bre	2455301	[o] 24553 16.1	PR 1LT,1LU Ø 368 mm			Bre	2461401	[o] 24614 16.6	PR 1KD,2ED Ø 358 mm
				98030900	L420	PR 1LF				98031000	L255	
				98034900	L370	PR 1LU,1LT			Bre	82076600		PR 1KF Ø 330 mm
				98038800	L370	PR 1LU,1LT				92122000	ø 330 x 28 x 73.5	PR 1KF
			Bre	82076500		PR 1LF Ø 350 mm				PRO 92122005	ø 330 x 28 x 73.5	PR 1KF
				92121700	ø 350 x 34 x 68.8	left PR 1LF				PRO 92151403	ø 358 x 28 x 73.5	PR 2ED,1KD
				92121800	ø 350 x 34 x 68.8	right PR 1LF				TPM0005		
				PRO 92121705	ø 350 x 34 x 68.8	left PR 1LF				91062400	ø 210 x 30	
				PRO 92121805	ø 350 x 34 x 68.8	right PR 1LF				97032200		
				PRO 92213603	ø 368 x 36 x 68.6	PR 1LU,1LT						
				TPM0005								

TOUAREG (7P5) 01/10→

784200			Bre	2409801	[o] 24098 17.1				Bre	2472101	[o] 24721 17.2	
3.0 V6 TDI	01/10→	150 / 204										
3.0 V6 TDI	01/10→	176 / 240		98045500	L325					98045400	L140	
3.0 V6 TDI	06/10→	165 / 225										
3.0 V6 TDI	05/11→	180 / 245										
3.0 V6 TSI	08/10→	213 / 290	Bre	82077400						92122000	ø 330 x 28 x 73.5	
3.0 V6 TSI Hybrid	04/10→	245 / 333										
3.6 V6 FSI	04/10→	206 / 280		92121500	ø 330 x 32 x 68.5	left				PRO 92122005	ø 330 x 28 x 73.5	
3.6 V6 FSI	08/10→	183 / 249		92121600	ø 330 x 32 x 68.5	right				TPM0005		
				PRO 92121505	ø 330 x 32 x 68.5	left				91074700	ø 210 x 30	
				PRO 92121605	ø 330 x 32 x 68.5	right						
				TPM0005								
784300			Bre	2500701	[o] 25007 17.1				Bre	2472101	[o] 24721 17.2	
4.2 V8 FSI	01/11→	265 / 360										
4.2 V8 TDI	01/10→	250 / 340		98045300	L295					98045400	L140	
				TPM0005						92122000	ø 330 x 28 x 73.5	
										PRO 92122005	ø 330 x 28 x 73.5	
										TPM0005		
										91074700	ø 210 x 30	

T - Z

TOURAN (1T1, 1T2) 02/03→05/10

			kW / hp											
		784400		Ate		2358701	[+] 23587 20.3		Luc		2391401	[o] 23914 17.2	
1.4 FSI	11/06→05/10	125 / 170		Ate	epad	2358781	[+] 23587 20.3		Luc	epad	2391481	[o] 23914 17.2	
				Ate		82062900			Luc		82509000		
				Ate		82076800			Luc		82063300		
					PRO	92120503	ø 312 x 25 x 49.7			PRO	92121103	ø 256 x 12 x 48.4	PR 1KE,1KF
						TPM0008				PRO	92140803	ø 282 x 12 x 48.5	PR 1KJ
											TPM0008		
		784500		Ate		2358701	[+] 23587 20.3		Bos		2456301	[–] 24563 17.7	PR 1KS Ø 272 mm 2009-11-02→
1.4 TSI	02/06→05/10	103 / 140		Ate	epad	2358781	[+] 23587 20.3		Luc		2391401	[o] 23914 17.2	PR 1KE,1KF Ø 256 mm →2009-11-02
				Ate		82062900			Luc	epad	2391481	[o] 23914 17.2	PR 1KE,1KF Ø 256 mm →2009-11-02
				Ate		82076800			Bos		82054300		PR 1KS 2009-11-02→
					PRO	92120803	ø 288 x 25 x 49.8		Luc		82509000		PR 1KE,1KF →2009-11-02
					PRO	92120805	ø 288 x 25 x 49.8		Luc		82063300		
						TPM0008				PRO	92121103	ø 256 x 12 x 48.4	PR 1KE,1KF →2009-11-02
										PRO	92224903	ø 272 x 10 x 48.3	PR 1KS 2009-11-02→
											TPM0008		
		784600		Ate		2358701	[+] 23587 20.3		Bos		2456301	[–] 24563 17.7	PR 1KS Ø 272 mm 2009-11-02→
1.4 TSI EcoFuel	05/09→05/10	110 / 150		Ate	epad	2358781	[+] 23587 20.3		Luc		2391401	[o] 23914 17.2	PR 1KE,1KF Ø 256 mm →2009-11-02
				Ate		82062900			Luc	epad	2391481	[o] 23914 17.2	PR 1KE,1KF Ø 256 mm →2009-11-02
				Ate		82076800			Bos		82054300		PR 1KS Ø 272 mm 2009-11-02→
					PRO	92120803	ø 288 x 25 x 49.8		Luc		82509000		PR 1KE,1KF Ø 256 mm →2009-11-02
					PRO	92120805	ø 288 x 25 x 49.8		Luc		82063300		
						TPM0008				PRO	92121103	ø 256 x 12 x 48.4	PR 1KE,1KF →2009-11-02
										PRO	92224903	ø 272 x 10 x 48.3	PR 1KS Ø 272 mm 2009-11-02→
											TPM0008		
		784700		Ate		2358701	[+] 23587 20.3		Bos		2456301	[–] 24563 17.7	PR 1KS Ø 272 mm 2009-11-02→
1.6	07/03→05/10	75 / 102		Ate	epad	2358781	[+] 23587 20.3		Luc		2391401	[o] 23914 17.2	PR 1KE,1KF Ø 256 mm →2009-11-02
				Ate		82062900			Luc	epad	2391481	[o] 23914 17.2	PR 1KE,1KF Ø 256 mm →2009-11-02
				Ate		82076800			Bos		82054300		PR 1KS Ø 272 mm 2009-11-02→
					PRO	92120803	ø 288 x 25 x 49.8		Luc		82509000		PR 1KF,1KE Ø 256 mm →2009-11-02
					PRO	92120805	ø 288 x 25 x 49.8		Luc		82063300		
						TPM0008				PRO	92121103	ø 256 x 12 x 48.4	PR 1KE,1KF →2009-11-02
										PRO	92224903	ø 272 x 10 x 48.3	PR 1KS 2009-11-02→
											TPM0008		
		784800		Ate		2358701	[+] 23587 20.3		Luc		2391401	[o] 23914 17.2	
1.6 FSI	02/03→01/07	85 / 115											
1.9 TDI	02/03→05/04	74 / 100		Ate	epad	2358781	[+] 23587 20.3		Luc	epad	2391481	[o] 23914 17.2	
2.0 FSI	10/03→11/05	110 / 150											
2.0 TDI	02/03→05/10	100 / 136		Ate		82062900			Luc		82509000		
2.0 TDI 16V	08/03→05/10	103 / 140		Ate		82076800			Luc		82063300		
					PRO	92120803	ø 288 x 25 x 49.8			PRO	92121103	ø 256 x 12 x 48.4	
					PRO	92120805	ø 288 x 25 x 49.8				TPM0008		

30 kW / hp

TOURAN (1T1, 1T2) 02/03→05/10

784800					TPM0008									
1.6 FSI	02/03→01/07	85 / 115												
1.9 TDI	02/03→05/04	74 / 100												
2.0 FSI	10/03→11/05	110 / 150												
2.0 TDI	02/03→05/10	100 / 136												
2.0 TDI 16V	08/03→05/10	103 / 140												
784900			Ate		2358701	[+] 23587	20.3		Bos		2456301	[–] 24563	17.7	PR 1KS
1.9 TDI	08/03→05/10	77 / 105	Ate	epad	2358781	[+] 23587	20.3		Luc		2391401	[o] 23914	17.2	PR 1KE,1KF →2009-11-02
			Ate		82062900				Luc	epad	2391481	[o] 23914	17.2	PR 1KE,1KF →2009-11-02
			Ate		82076800				Bos		82054300			PR 1KS 2009-11-02→
				PRO	92120803	ø 288 x 25 x 49.8			Luc		82509000			PR 1KE,1KF →2009-11-02
				PRO	92120805	ø 288 x 25 x 49.8			Luc		82063300			
					TPM0008					PRO	92121103	ø 256 x 12 x 48.4		PR 1KE,1KF
										PRO	92224903	ø 272 x 10 x 48.3		PR 1KS
											TPM0008			
785000			Ate		2358701	[+] 23587	20.3		Luc		2391401	[o] 23914	17.2	→2009-11-02
1.9 TDI	11/04→05/10	66 / 90	Ate	epad	2358781	[+] 23587	20.3		Luc	epad	2391481	[o] 23914	17.2	→2009-11-02
2.0 EcoFuel	02/06→05/09	80 / 109	Ate		82062900				Luc		82509000			→2009-11-02
			Ate		82076800				Luc		82063300			
				PRO	92120803	ø 288 x 25 x 49.8				PRO	92121103	ø 256 x 12 x 48.4		
				PRO	92120805	ø 288 x 25 x 49.8					TPM0008			
					TPM0008									
785100			Ate		2358701	[+] 23587	20.3		Bos		2456301	[–] 24563	17.7	PR 1KS Ø 272 mm
2.0 FSI	10/04→05/10	85 / 115	Ate	epad	2358781	[+] 23587	20.3		Luc		2391401	[o] 23914	17.2	
			Ate		82062900				Luc	epad	2391481	[o] 23914	17.2	
			Ate		82076800				Bos		82054300			PR 1KS Ø 272 mm
				PRO	92120803	ø 288 x 25 x 49.8			Luc		82509000			
				PRO	92120805	ø 288 x 25 x 49.8			Luc		82063300			
					TPM0008					PRO	92121103	ø 256 x 12 x 48.4		PR 1KE,1KF
										PRO	92140803	ø 282 x 12 x 48.5		PR 1KJ
										PRO	92224903	ø 272 x 10 x 48.3		PR 1KS
											TPM0008			
785200			Ate		2358701	[+] 23587	20.3		Bos		2456301	[–] 24563	17.7	PR 1KS Ø 272 mm
2.0 TDI	12/05→05/10	103 / 140	Ate	epad	2358781	[+] 23587	20.3		Luc		2391401	[o] 23914	17.2	PR 1KE/1KF Ø 256 mm
			Ate		82062900				Luc	epad	2391481	[o] 23914	17.2	PR 1KE/1KF Ø 256 mm
			Ate		82076800				Bos		82054300			PR 1KS
				PRO	92120803	ø 288 x 25 x 49.8			Luc		82509000			
				PRO	92120805	ø 288 x 25 x 49.8			Luc		82063300			
					TPM0008					PRO	92121103	ø 256 x 12 x 48.4		PR 1KE,1KF
										PRO	92224903	ø 272 x 10 x 48.3		PR 1KS
											TPM0008			
785300			Ate		2358701	[+] 23587	20.3		Bos		2456301	[–] 24563	17.7	PR 1KS Ø 272 mm
2.0 TDI	12/05→05/10	125 / 170	Ate	epad	2358781	[+] 23587	20.3		Luc		2391401	[o] 23914	17.2	PR 1KE,1KF Ø 256 mm
			Ate		82062900				Luc	epad	2391481	[o] 23914	17.2	PR 1KE,1KF Ø 256 mm

T - Z

TOURAN (1T1, 1T2) 02/03→05/10

785300													
2.0 TDI	12/05→05/10	125 / 170	Ate	82076800			Bos	82054300		PR 1KS Ø 272 mm
			PRO	92120503	ø 312 x 25 x 49.7		Luc	82509000		
				TPM0008			Luc	82063300		
								PRO 92121103	ø 256 x 12 x 48.4	PR 1KE,1KF
								PRO 92224903	ø 272 x 10 x 48.3	PR 1KS
								TPM0008		

TOURAN (1T3) 05/10→

785400			Ate	2358701	[+] 23587 20.3		Bos	2456301	[–] 24563 17.7	
1.2 TSI	05/10→	77 / 105								
1.4 TSI	05/10→	103 / 140	Ate epad	2358781	[+] 23587 20.3		Bos	82054300		
1.6 TDI	05/10→	66 / 90								
1.6 TDI	05/10→	77 / 105								
2.0 TDI	11/10→	81 / 110	Ate	82062900			PRO	92224903	ø 272 x 10 x 48.3	
			Ate	82076800				TPM0008		
			PRO	92120803	ø 288 x 25 x 49.8					
			PRO	92120805	ø 288 x 25 x 49.8					
				TPM0008						
785500			Ate	2358701	[+] 23587 20.3		Bos	2456301	[–] 24563 17.7	
1.4 TSI	05/10→	125 / 170								
1.4 TSI EcoFuel	05/10→	110 / 150	Ate epad	2358781	[+] 23587 20.3		Bos	82054300		
2.0 TDI	05/10→	103 / 140								
2.0 TDI	05/10→01/13	125 / 170								
2.0 TDI	01/13→	130 / 177	Ate	82062900			PRO	92224903	ø 272 x 10 x 48.3	
			Ate	82076800				TPM0008		
			PRO	92120503	ø 312 x 25 x 49.7					
				TPM0008						

TRANSPORTER / CARAVELLE IV Bus (70XB, 70XC, 7DB, 7DW) 09/90→04/03

→ TRANSPORTER IV Bus (70XB, 70XC, 7DB, 7DW), Page 1276

TRANSPORTER / CARAVELLE V Bus (7HB, 7HJ, 7EB, 7EJ, 7EF) 04/03→11/09

→ TRANSPORTER V Bus (7HB, 7HJ, 7EB, 7EJ, 7EF), Page 1282

TRANSPORTER / CARAVELLE Mk IV Bus (70XB, 70XC, 7DB, 7DW) 09/90→04/03

→ TRANSPORTER IV Bus (70XB, 70XC, 7DB, 7DW), Page 1276

TRANSPORTER / CARAVELLE Mk V Bus (7HB, 7HJ, 7EB, 7EJ, 7EF) 04/03→11/09

→ TRANSPORTER V Bus (7HB, 7HJ, 7EB, 7EJ, 7EF), Page 1282

TRANSPORTER / MULTIVAN IV Autobús (70XB, 70XC, 7DB, 7DW) 09/90→04/03

→ TRANSPORTER IV Bus (70XB, 70XC, 7DB, 7DW), Page 1276

TRANSPORTER / MULTIVAN IV Autocarro (70XB, 70XC, 7DB, 7DW) 09/90→04/03

→ TRANSPORTER IV Bus (70XB, 70XC, 7DB, 7DW), Page 1276

TRANSPORTER / MULTIVAN IV Bus (70XB, 70XC, 7DB, 7DW) 09/90→04/03

→ TRANSPORTER IV Bus (70XB, 70XC, 7DB, 7DW), Page 1276

TRANSPORTER IV Box (70XA) 07/90→04/03

785600			Luc	2012401	[–] 20124 19	Ø 260 mm ⊕ rim size 14" →70-T-199000 →12/95 Fist-type cal.	Luc	2322416	[+] 23224 17.3	Ø 280 mm ⊕ rim size 15" 70-T-200001→ 01/96→
1.9 TD	10/92→04/03	50 / 68								
2.0	07/90→04/03	62 / 84	Luc	2147902	[–] 21479 19.2	Ø 282 mm solid disc Lucas ⊕ rim size 15" →70-X-250000 →04/99 Fist-type cal.	Luc	2344605	[+] 23446 16.5	Ø 294 mm ⊕ rim size 16" 05/97→
			Luc	2163501	[–] 21635 18.2	Ø 280 mm vented disc Lucas ⊕ rim size 15" →70-X-250000 →04/99 Frame saddle	Luc	82059600		70-T-200001→ 01/96→
			Ate	2188302	[–] 21883 19.6	Ø 280 mm Teves vented disc ⊕ rim size 15" 70-T-200001→ →70-X-250000 01/96→ →04/99 Fist-type cal.	Luc	82063300		
								91044600	ø 268 x 56	→70-T-199000 →12/95
							Ben	97008500		→70-T-199000 →12/95
			Luc	2147903	[+] 21479 19.2	Ø 282 mm solid disc Lucas ⊕ rim size 15" 70-Y-000001→ 05/99→ Fist-type cal.	PRO	92083903	ø 280 x 12 x 40.3	⊕ rim size 15" 70-T-200001→ 01/96→
			Ate	2188501	[+] 21885 20.6	Ø 280 mm vented disc Teves ⊕ rim size 15" 70-Y-000001→ 05/99→ Fist-type cal.	PRO	92098103	ø 294 x 13.5 x 41	⊕ rim size 16" 05/97→
			Ate	2303401	[+] 23034 18.6	Ø 300 mm ⊕ rim size 16" 70-W-000001→ →70-1-000954 05/97→ →05/00		94012400	ø 268,0 x 68	→70-T-199000 →12/95
			Luc	2317602	[+] 23176 18.2	Ø 280 mm vented disc Lucas ⊕ rim size 15" 70-Y-000001→ 05/99→ Frame saddle				

TRANSPORTER IV Box (70XA) 07/90→04/03

		kW / hp											
		785600											
1.9 TD	10/92→04/03	50 / 68	Ate	2326903	[+] 23269	20.1	Ø 313 mm ⊕ rim size 16" 70-1-000955→ 05/00→						
2.0	07/90→04/03	62 / 84	Luc	82032400			Lucas vented disc ⊕ rim size 15" →70-X-250000 →04/99						
			Ate	82029300			⊕ rim size 16" 70-1-000955→ 05/00→						
			Ate	82062900			Teves						
			Ate	82076900			70-T-200001→ 01/96→ ⊕ rim size 15"						
			Ate	82503000			→70-1-000954 →05/00 ⊕ rim size 16"						
				92055900	ø 260 x 16 x 64.2		⊕ rim size 14" →70-T-199000 →12/95 Fist-type cal.						
				92058500	ø 282 x 18 x 64.7		⊕ rim size 15" →70-T-199000 →12/95 Fist-type cal.						
				PRO 92083703	ø 282 x 18 x 55.2		⊕ rim size 15" 70-T-200001→ 01/96→ Fist-type cal.						
				92056000	ø 280 x 24 x 64.7		⊕ rim size 15" →70-T-199000 →12/95 Frame saddle						
				92109900	ø 313 x 26 x 56.2		⊕ rim size 16" 70-1-000955→ 05/00→						
				PRO 92083803	ø 280 x 24 x 55.2		⊕ rim size 15" 70-T-200001→ 01/96→ Fist-type cal. Frame saddle						
				PRO 92109803	ø 300 x 26 x 56		⊕ rim size 16" 70-W-000001→ →70-1-000954 05/97→ →05/00						
				PRO 92109903	ø 313 x 26 x 56.2		⊕ rim size 16" 70-1-000955→ 05/00→						
		785700	Luc	2147902	[–] 21479	19.2	Ø 282 mm solid disc Lucas ⊕ rim size 15" →70-X-250000 →04/99 Fist-type cal.	Luc		2322416	[+] 23224	17.3	Ø 280 mm ⊕ rim size 15"
2.4 D	08/97→04/03	55 / 75						Luc		2344605	[+] 23446	16.5	Ø 294 mm ⊕ rim size 16"
2.5 TDI	12/98→04/03	65 / 88	Luc	2163501	[–] 21635	18.2	Ø 280 mm vented disc Lucas ⊕ rim size 15" →70-X-250000 →04/99 Frame saddle	Luc		82059600			
			Ate	2188302	[–] 21883	19.6	Ø 280 mm Teves vented disc ⊕ rim size 15" →70-X-250000 →04/99 Fist-type cal.	Luc		82063300			
			Luc	2147903	[+] 21479	19.2	Ø 282 mm solid disc Lucas ⊕ rim size 15" 70-Y-000001→ 05/99→ Fist-type cal.		PRO	92083903	ø 280 x 12 x 40.3		⊕ rim size 15"
			Ate	2188501	[+] 21885	20.6	Ø 280 mm vented disc Teves ⊕ rim size 15" 70-Y-000001→ 05/99→ Fist-type cal.		PRO	92098103	ø 294 x 13.5 x 41		⊕ rim size 16"
			Ate	2303401	[+] 23034	18.6	Ø 300 mm ⊕ rim size 16" →70-1-000954 →05/00						
			Luc	2317602	[+] 23176	18.2	Ø 280 mm vented disc Lucas ⊕ rim size 15" 70-Y-000001→ 05/99→ Frame saddle						
			Ate	2326903	[+] 23269	20.1	Ø 313 mm ⊕ rim size 16" 70-1-000955→ 05/00→						
			Luc	82032400			Lucas vented disc ⊕ rim size 15" →70-X-250000 →04/99						
			Ate	82029300			⊕ rim size 16" 70-1-000955→ 05/00→						
			Ate	82062900			Teves						
			Ate	82076900			⊕ rim size 15"						
			Ate	82503000			→70-1-000954 →05/00 ⊕ rim size 16"						
				PRO 92083703	ø 282 x 18 x 55.2		⊕ rim size 15" Fist-type cal.						
				92109900	ø 313 x 26 x 56.2		⊕ rim size 16" 70-1-000955→ 05/00→						
				PRO 92083803	ø 280 x 24 x 55.2		⊕ rim size 15" Fist-type cal. Frame saddle						
				PRO 92109803	ø 300 x 26 x 56		⊕ rim size 16" →70-1-000954 →05/00						
				PRO 92109903	ø 313 x 26 x 56.2		⊕ rim size 16" 70-1-000955→ 05/00→						
		785800	Luc	2147902	[–] 21479	19.2	Ø 282 mm solid disc Lucas ⊕ rim size 15" →70-X-250000 →04/99 Fist-type cal.	Luc		2322416	[+] 23224	17.3	Ø 280 mm ⊕ rim size 15" 70-T-200001→ 01/96→
2.5	11/90→04/03	81 / 110						Luc		2344605	[+] 23446	16.5	Ø 294 mm ⊕ rim size 16" 05/97→
2.5 Syncro	10/92→04/03	81 / 110											
2.5 TDI	09/95→04/03	75 / 102	Luc	2163501	[–] 21635	18.2	Ø 280 mm vented disc Lucas ⊕ rim size 15" →70-X-250000 →04/99 Frame saddle	Luc		82059600			70-T-200001→ 01/96→
2.5 TDI Syncro	09/95→04/03	75 / 102	Ate	2188302	[–] 21883	19.6	Ø 280 mm Teves vented disc ⊕ rim size 15" 70-T-200001→ →70-X-250000 01/96→ →04/99 Fist-type cal.	Luc		82063300			
										91044600	ø 268 x 56		→70-T-199000 →12/95
			Luc	2147903	[+] 21479	19.2	Ø 282 mm solid disc Lucas ⊕ rim size 15" 70-Y-000001→ 05/99→ Fist-type cal.	Ben		97008500			→70-T-199000 →12/95

T - Z

TRANSPORTER IV Box (70XA) 07/90→04/03

		kW / hp											
785800													
2.5	11/90→04/03	81 / 110	Ate		2188501	[+] 21885	20.6	Ø 280 mm vented disc Teves ⊕ rim size 15" 70-Y-000001→ 05/99→ Fist-type cal.			92083903	ø 280 x 12 x 40.3	⊕ rim size 15" 70-T-200001→ 01/96→
2.5 Syncro	10/92→04/03	81 / 110								PRO			
2.5 TDI	09/95→04/03	75 / 102	Ate		2303401	[+] 23034	18.6	Ø 300 mm ⊕ rim size 16" 70-W-000001→ →70-1-000954 05/97→ →05/00		PRO	92098103	ø 294 x 13.5 x 41	⊕ rim size 16" 05/97→
2.5 TDI Syncro	09/95→04/03	75 / 102	Luc		2317602	[+] 23176	18.2	Ø 280 mm vented disc Lucas ⊕ rim size 15" 70-Y-000001→ 05/99→ Frame saddle			94012400	ø 268,0 x 68	→70-T-199000 →12/95
			Ate		2326903	[+] 23269	20.1	Ø 313 mm ⊕ rim size 16" 70-1-000955→ 05/00→					
			Luc		82032400			Lucas vented disc ⊕ rim size 15" →70-X-250000 →04/99					
			Ate		82029300			⊕ rim size 16" 70-1-000955→ 05/00→					
			Ate		82062900			Teves					
			Ate		82076900			70-T-200001→ 01/96→ ⊕ rim size 15"					
			Ate		82503000			→70-1-000954 →05/00 ⊕ rim size 16"					
					92058500	ø 282 x 18 x 64.7		⊕ rim size 15" →70-T-199000 →12/95 Fist-type cal.					
				PRO	92083703	ø 282 x 18 x 55.2		⊕ rim size 15" 70-T-200001→ 01/96→ Fist-type cal.					
					92056000	ø 280 x 24 x 64.7		⊕ rim size 15" →70-T-199000 →12/95 Frame saddle					
					92109900	ø 313 x 26 x 56.2		⊕ rim size 16" 70-1-000955→ 05/00→					
				PRO	92083803	ø 280 x 24 x 55.2		⊕ rim size 15" 70-T-200001→ 01/96→ Fist-type cal. Frame saddle					
				PRO	92109803	ø 300 x 26 x 56		⊕ rim size 16" 70-W-000001→ →70-1-000954 05/97→ →05/00					
				PRO	92109903	ø 313 x 26 x 56.2		⊕ rim size 16" 70-1-000955→ 05/00→					
785900													
2.5	08/96→04/03	85 / 115	Luc		2147902	[–] 21479	19.2	Ø 282 mm solid disc Lucas ⊕ rim size 15" →70-X-250000 →04/99 Fist-type cal.	Luc		2322416	[+] 23224 17.3	Ø 280 mm ⊕ rim size 15"
2.5 Syncro	08/96→04/03	85 / 115	Luc		2163501	[–] 21635	18.2	Ø 280 mm vented disc Lucas ⊕ rim size 15" →70-X-250000 →04/99 Frame saddle	Luc		2344605	[+] 23446 16.5	Ø 294 mm ⊕ rim size 16" 05/97→
			Ate		2188302	[–] 21883	19.6	Ø 280 mm Teves vented disc ⊕ rim size 15" →70-X-250000 →04/99 Fist-type cal.	Luc		82059600		
									Luc		82063300		
			Luc		2147903	[+] 21479	19.2	Ø 282 mm solid disc Lucas ⊕ rim size 15" 70-Y-000001→ 05/99→ Fist-type cal.		PRO	92083903	ø 280 x 12 x 40.3	⊕ rim size 15"
			Ate		2188501	[+] 21885	20.6	Ø 280 mm vented disc Teves ⊕ rim size 15" 70-Y-000001→ 05/99→ Fist-type cal.		PRO	92098103	ø 294 x 13.5 x 41	⊕ rim size 16" 05/97→
			Ate		2303401	[+] 23034	18.6	Ø 300 mm ⊕ rim size 16" 70-W-000001→ →70-1-000954 05/97→ →05/00					
			Luc		2317602	[+] 23176	18.2	Ø 280 mm vented disc Lucas ⊕ rim size 15" 70-Y-000001→ 05/99→ Frame saddle					
			Ate		2326903	[+] 23269	20.1	Ø 313 mm ⊕ rim size 16" 70-1-000955→ 05/00→					
			Luc		82032400			Lucas vented disc ⊕ rim size 15" →70-X-250000 →04/99					
			Ate		82029300			⊕ rim size 16" 70-1-000955→ 05/00→					
			Ate		82062900			Teves					
			Ate		82076900			⊕ rim size 15"					
			Ate		82503000			→70-1-000954 →05/00 ⊕ rim size 16"					
				PRO	92083703	ø 282 x 18 x 55.2		⊕ rim size 15" Fist-type cal.					
					92109900	ø 313 x 26 x 56.2		⊕ rim size 16" 70-1-000955→ 05/00→					
				PRO	92083803	ø 280 x 24 x 55.2		⊕ rim size 15" Fist-type cal. Frame saddle					
				PRO	92109803	ø 300 x 26 x 56		⊕ rim size 16" 70-W-000001→ →70-1-000954 05/97→ →05/00					
				PRO	92109903	ø 313 x 26 x 56.2		⊕ rim size 16" 70-1-000955→ 05/00→					
786000													
2.5 TDI	09/00→04/03	111 / 151	Luc		2147903	[+] 21479	19.2	Ø 282 mm solid disc Lucas ⊕ rim size 15" Fist-type cal.	Luc		2322416	[+] 23224 17.3	Ø 280 mm ⊕ rim size 15"
			Ate		2188501	[+] 21885	20.6	Ø 280 mm vented disc Teves ⊕ rim size 15" Fist-type cal.	Luc		2344605	[+] 23446 16.5	Ø 294 mm ⊕ rim size 16"
			Luc		2317602	[+] 23176	18.2	Ø 280 mm vented disc Lucas ⊕ rim size 15" Frame saddle	Luc		82059600		

		kW / hp										
TRANSPORTER IV Box (70XA) 07/90→04/03												
786000			Ate		**2326903**	[+] 23269 20.1	Ø 313 mm ⊕ rim size 16"	Luc		**82063300**		
2.5 TDI	09/00→04/03	111 / 151	Ate		**82029300**		⊕ rim size 16"		PRO	**92083903**	ø 280 x 12 x 40.3	⊕ rim size 15"
			Ate		**82062900**		Teves		PRO	**92098103**	ø 294 x 13.5 x 41	⊕ rim size 16"
			Ate		**82076900**		⊕ rim size 15"					
				PRO	**92083703**	ø 282 x 18 x 55.2	⊕ rim size 15" Fist-type cal.					
					92109900	ø 313 x 26 x 56.2	⊕ rim size 16"					
				PRO	**92083803**	ø 280 x 24 x 55.2	⊕ rim size 15" Fist-type cal. Frame saddle					
				PRO	**92109903**	ø 313 x 26 x 56.2	⊕ rim size 16"					
786100			Luc		**2163501**	[–] 21635 18.2	Ø 280 mm vented disc Lucas ⊕ rim size 15" →70-X-250000 →04/99 Frame saddle	Luc		**2322416**	[+] 23224 17.3	Ø 280 mm ⊕ rim size 15"
2.8 VR6	05/96→05/00	103 / 140	Ate		**2188302**	[–] 21883 19.6	Ø 280 mm Teves vented disc ⊕ rim size 15" →70-X-250000 →04/99 Fist-type cal.	Luc		**2344605**	[+] 23446 16.5	Ø 294 mm ⊕ rim size 16" 05/97→
			Ate		**2188501**	[+] 21885 20.6	Ø 280 mm vented disc Teves ⊕ rim size 15" 70-Y-000001→ 05/99→ Fist-type cal.	Luc		**82059600**		
			Ate		**2303401**	[+] 23034 18.6	Ø 300 mm ⊕ rim size 16" 70-W-000001→ 05/97→	Luc		**82063300**		
			Luc		**2317602**	[+] 23176 18.2	Ø 280 mm vented disc Lucas ⊕ rim size 15" 70-Y-000001→ 05/99→ Frame saddle		PRO	**92083903**	ø 280 x 12 x 40.3	⊕ rim size 15"
			Ate		**2326903**	[+] 23269 20.1	Ø 313 mm ⊕ rim size 16" 70-1-000955→ 05/00→		PRO	**92098103**	ø 294 x 13.5 x 41	⊕ rim size 16" 05/97→
			Luc		**82032400**		Lucas vented disc ⊕ rim size 15" →70-X-250000 →04/99					
			Ate		**82029300**		⊕ rim size 16" 70-1-000955→ 05/00→					
			Ate		**82062900**		Teves					
			Ate		**82076900**		⊕ rim size 15"					
			Ate		**82503000**		⊕ rim size 16"					
					92109900	ø 313 x 26 x 56.2	⊕ rim size 16" 70-1-000955→ 05/00→					
				PRO	**92083803**	ø 280 x 24 x 55.2	⊕ rim size 15" Fist-type cal. Frame saddle					
				PRO	**92109803**	ø 300 x 26 x 56	⊕ rim size 16" 70-W-000001→ 05/97→					
				PRO	**92109903**	ø 313 x 26 x 56.2	⊕ rim size 16" 70-1-000955→ 05/00→					
786200			Ate		**2326903**	[+] 23269 20.1		Luc		**2344605**	[+] 23446 16.5	
2.8 VR6	06/00→04/03	150 / 204	Ate		**82029300**			Luc		**82059600**		
			Ate		**82062900**		Teves	Luc		**82063300**		
					92109900	ø 313 x 26 x 56.2			PRO	**92098103**	ø 294 x 13.5 x 41	
				PRO	**92109903**	ø 313 x 26 x 56.2						
TRANSPORTER IV Bus (70XB, 70XC, 7DB, 7DW) 09/90→04/03												
786300			Luc		**2012401**	[–] 20124 19	Ø 260 mm ⊕ rim size 14" →70-T-199000 →12/95 Fist-type cal.	Luc		**2322416**	[+] 23224 17.3	Ø 280 mm ⊕ rim size 15" 70-T-200001→ 01/96→
1.9 TD	10/92→04/03	50 / 68	Luc		**2147902**	[–] 21479 19.2	Ø 282 mm solid disc Lucas ⊕ rim size 15" →70-X-250000 →04/99 Fist-type cal.	Luc		**2344605**	[+] 23446 16.5	Ø 294 mm ⊕ rim size 16" 05/97→
2.0	09/90→04/03	62 / 84	Luc		**2163501**	[–] 21635 18.2	Ø 280 mm vented disc Lucas ⊕ rim size 15" →70-X-250000 →04/99 Frame saddle	Luc		**82059600**		70-T-200001→ 01/96→
			Ate		**2188302**	[–] 21883 19.6	Ø 280 mm Teves vented disc ⊕ rim size 15" 70-T-200001→ →70-X-250000 01/96→ →04/99 Fist-type cal.	Luc		**82063300**		
										91044600	ø 268 x 56	→70-T-199000 →12/95
								Ben		**97008500**		→70-T-199000 →12/95
			Luc		**2147903**	[+] 21479 19.2	Ø 282 mm solid disc Lucas ⊕ rim size 15" 70-Y-000001→ 05/99→ Fist-type cal.		PRO	**92083903**	ø 280 x 12 x 40.3	⊕ rim size 15" 70-T-200001→ 01/96→
			Ate		**2188501**	[+] 21885 20.6	Ø 280 mm vented disc Teves ⊕ rim size 15" 70-Y-000001→ 05/99→ Fist-type cal.		PRO	**92098103**	ø 294 x 13.5 x 41	⊕ rim size 16" 05/97→
			Ate		**2303401**	[+] 23034 18.6	Ø 300 mm ⊕ rim size 16" 70-W-000001→ →70-1-000954 05/97→ →05/00			**94012400**	ø 268,0 x 68	→70-T-199000 →12/95

T - Z

TRANSPORTER IV Bus (70XB, 70XC, 7DB, 7DW) 09/90→04/03

		kW / hp											
		786300											
1.9 TD	10/92→04/03	50 / 68	Luc		2317602	[+] 23176 18.2	Ø 280 mm vented disc Lucas ⊕ rim size 15" 70-Y-000001→ 05/99→ Frame saddle						
2.0	09/90→04/03	62 / 84	Ate		2326903	[+] 23269 20.1	Ø 313 mm ⊕ rim size 16" 70-1-000955→ 05/00→						
			Luc		82032400		Lucas vented disc ⊕ rim size 15" →70-X-250000 →04/99						
			Ate		82029300		⊕ rim size 16" 70-1-000955→ 05/00→						
			Ate		82062900		Teves						
			Ate		82076900		70-T-200001→ 01/96→ ⊕ rim size 15"						
			Ate		82503000		→70-1-000954 →05/00 ⊕ rim size 16"						
					92055900	ø 260 x 16 x 64.2	⊕ rim size 14" →70-T-199000 →12/95 Fist-type cal.						
					92058500	ø 282 x 18 x 64.7	⊕ rim size 15" →70-T-199000 →12/95 Fist-type cal.						
				PRO	92083703	ø 282 x 18 x 55.2	⊕ rim size 15" 70-T-200001→ 01/96→ Fist-type cal.						
					92056000	ø 280 x 24 x 64.7	⊕ rim size 15" →70-T-199000 →12/95 Frame saddle						
					92109900	ø 313 x 26 x 56.2	⊕ rim size 16" 70-1-000955→ 05/00→						
				PRO	92083803	ø 280 x 24 x 55.2	⊕ rim size 15" 70-T-200001→ 01/96→ Fist-type cal. Frame saddle						
				PRO	92109803	ø 300 x 26 x 56	⊕ rim size 16" 70-W-000001→ →70-1-000954 05/97→ →05/00						
				PRO	92109903	ø 313 x 26 x 56.2	⊕ rim size 16" 70-1-000955→ 05/00→						
		786400	Luc		2147902	[–] 21479 19.2	Ø 282 mm solid disc Lucas ⊕ rim size 15" →70-X-250000 →04/99 Fist-type cal.	Luc		2322416	[+] 23224 17.3	Ø 280 mm ⊕ rim size 15"	
2.4 D	08/97→04/03	55 / 75						Luc		2344605	[+] 23446 16.5	Ø 294 mm ⊕ rim size 16"	
2.5 TDI	05/98→04/03	65 / 88	Luc		2163501	[–] 21635 18.2	Ø 280 mm vented disc Lucas ⊕ rim size 15" →70-X-250000 →04/99 Frame saddle	Luc		82059600			
2.5 TDI	05/98→04/03	111 / 151	Ate		2188302	[–] 21883 19.6	Ø 280 mm Teves vented disc ⊕ rim size 15" →70-X-250000 →04/99 Fist-type cal.	Luc		82063300			
			Luc		2147903	[+] 21479 19.2	Ø 282 mm solid disc Lucas ⊕ rim size 15" 70-Y-000001→ 05/99→ Fist-type cal.		PRO	92083903	ø 280 x 12 x 40.3	⊕ rim size 15"	
			Ate		2188501	[+] 21885 20.6	Ø 280 mm vented disc Teves ⊕ rim size 15" 70-Y-000001→ 05/99→ Fist-type cal.		PRO	92098103	ø 294 x 13.5 x 41	⊕ rim size 16"	
			Ate		2303401	[+] 23034 18.6	Ø 300 mm ⊕ rim size 16" →70-1-000954 →05/00						
			Luc		2317602	[+] 23176 18.2	Ø 280 mm vented disc Lucas ⊕ rim size 15" 70-Y-000001→ 05/99→ Frame saddle						
			Ate		2326903	[+] 23269 20.1	Ø 313 mm ⊕ rim size 16" 70-1-000955→ 05/00→						
			Luc		82032400		Lucas vented disc ⊕ rim size 15" →70-X-250000 →04/99						
			Ate		82029300		⊕ rim size 16" 70-1-000955→ 05/00→						
			Ate		82062900		Teves						
			Ate		82076900		⊕ rim size 15"						
			Ate		82503000		→70-1-000954 →05/00 ⊕ rim size 16"						
				PRO	92083703	ø 282 x 18 x 55.2	⊕ rim size 15" Fist-type cal.						
					92109900	ø 313 x 26 x 56.2	⊕ rim size 16" 70-1-000955→ 05/00→						
				PRO	92083803	ø 280 x 24 x 55.2	⊕ rim size 15" Fist-type cal. Frame saddle						
				PRO	92109803	ø 300 x 26 x 56	⊕ rim size 16" →70-1-000954 →05/00						
				PRO	92109903	ø 313 x 26 x 56.2	⊕ rim size 16" 70-1-000955→ 05/00→						
		786500	Luc		2147902	[–] 21479 19.2	Ø 282 mm solid disc Lucas ⊕ rim size 15" →70-X-250000 →04/99 Fist-type cal.	Luc		2322416	[+] 23224 17.3	Ø 280 mm ⊕ rim size 15" 70-T-200001→ 01/96→	
2.5	11/90→04/03	81 / 110						Luc		2344605	[+] 23446 16.5	Ø 294 mm ⊕ rim size 16" 05/97→	
2.5 Syncro	11/92→04/03	81 / 110	Luc		2163501	[–] 21635 18.2	Ø 280 mm vented disc Lucas ⊕ rim size 15" →70-X-250000 →04/99 Frame saddle	Luc		82059600		70-T-200001→ 01/96→	
2.5 TDI	09/95→04/03	75 / 102	Ate		2188302	[–] 21883 19.6	Ø 280 mm Teves vented disc ⊕ rim size 15" 70-T-200001→ →70-X-250000 01/96→ →04/99 Fist-type cal.	Luc		82063300			
										91044600	ø 268 x 56	→70-T-199000 →12/95	

TRANSPORTER IV Bus (70XB, 70XC, 7DB, 7DW) 09/90→04/03

		786500											
2.5	11/90→04/03	81 / 110	Luc		2147903	[+] 21479	19.2	Ø 282 mm solid disc Lucas ⊕ rim size 15" 70-Y-000001→ 05/99→ Fist-type cal.	Ben		97008500		→70-T-199000 →12/95
2.5 Syncro	11/92→04/03	81 / 110											
2.5 TDI	09/95→04/03	75 / 102	Ate		2188501	[+] 21885	20.6	Ø 280 mm vented disc Teves ⊕ rim size 15" 70-Y-000001→ 05/99→ Fist-type cal.		PRO	92083903	ø 280 x 12 x 40.3	⊕ rim size 15" 70-T-200001→ 01/96→
			Ate		2303401	[+] 23034	18.6	Ø 300 mm ⊕ rim size 16" 70-W-000001→ →70-1-000954 05/97→ →05/00		PRO	92098103	ø 294 x 13.5 x 41	⊕ rim size 16" 05/97→
			Luc		2317602	[+] 23176	18.2	Ø 280 mm vented disc Lucas ⊕ rim size 15" 70-Y-000001→ 05/99→ Frame saddle			94012400	ø 268,0 x 68	→70-T-199000 →12/95
			Ate		2326903	[+] 23269	20.1	Ø 313 mm ⊕ rim size 16" 70-1-000955→ 05/00→					
			Luc		82032400			Lucas vented disc ⊕ rim size 15" →70-X-250000 →04/99					
			Ate		82029300			⊕ rim size 16" 70-1-000955→ 05/00→					
			Ate		82062900			Teves					
			Ate		82076900			70-T-200001→ 01/96→ ⊕ rim size 15"					
			Ate		82503000			→70-1-000954 →05/00 ⊕ rim size 16"					
					92058500	ø 282 x 18 x 64.7		⊕ rim size 15" →70-T-199000 →12/95 Fist-type cal.					
				PRO	92083703	ø 282 x 18 x 55.2		⊕ rim size 15" 70-T-200001→ 01/96→ Fist-type cal.					
					92056000	ø 280 x 24 x 64.7		⊕ rim size 15" →70-T-199000 →12/95 Frame saddle					
					92109900	ø 313 x 26 x 56.2		⊕ rim size 16" 70-1-000955→ 05/00→					
				PRO	92083803	ø 280 x 24 x 55.2		⊕ rim size 15" 70-T-200001→ 01/96→ Fist-type cal. Frame saddle					
				PRO	92109803	ø 300 x 26 x 56		⊕ rim size 16" 70-W-000001→ →70-1-000954 05/97→ →05/00					
				PRO	92109903	ø 313 x 26 x 56.2		⊕ rim size 16" 70-1-000955→ 05/00→					
		786600							Luc		2322416	[+] 23224 17.3	Ø 280 mm ⊕ rim size 15"
2.5	08/96→04/03	85 / 115	Luc		2147902	[–] 21479	19.2	Ø 282 mm solid disc Lucas ⊕ rim size 15" →70-X-250000 →04/99 Fist-type cal.	Luc		2344605	[+] 23446 16.5	Ø 294 mm ⊕ rim size 16" 05/97→
2.5 Syncro	07/96→04/03	85 / 115											
2.5 TDI Syncro	01/96→04/03	75 / 102	Luc		2163501	[–] 21635	18.2	Ø 280 mm vented disc Lucas ⊕ rim size 15" →70-X-250000 →04/99 Frame saddle	Luc		82059600		
			Ate		2188302	[–] 21883	19.6	Ø 280 mm Teves vented disc ⊕ rim size 15" →70-X-250000 →04/99 Fist-type cal.	Luc		82063300		
			Luc		2147903	[+] 21479	19.2	Ø 282 mm solid disc Lucas ⊕ rim size 15" 70-Y-000001→ 05/99→ Fist-type cal.		PRO	92083903	ø 280 x 12 x 40.3	⊕ rim size 15"
			Ate		2188501	[+] 21885	20.6	Ø 280 mm vented disc Teves ⊕ rim size 15" 70-Y-000001→ 05/99→ Fist-type cal.		PRO	92098103	ø 294 x 13.5 x 41	⊕ rim size 16" 05/97→
			Ate		2303401	[+] 23034	18.6	Ø 300 mm ⊕ rim size 16" 70-W-000001→ →70-1-000954 05/97→ →05/00					
			Luc		2317602	[+] 23176	18.2	Ø 280 mm vented disc Lucas ⊕ rim size 15" 70-Y-000001→ 05/99→ Frame saddle					
			Ate		2326903	[+] 23269	20.1	Ø 313 mm ⊕ rim size 16" 70-1-000955→ 05/00→					
			Luc		82032400			Lucas vented disc ⊕ rim size 15" →70-X-250000 →04/99					
			Ate		82029300			⊕ rim size 16" 70-1-000955→ 05/00→					
			Ate		82062900			Teves					
			Ate		82076900			⊕ rim size 15"					
			Ate		82503000			→70-1-000954 →05/00 ⊕ rim size 16"					
				PRO	92083703	ø 282 x 18 x 55.2		⊕ rim size 15" Fist-type cal.					
					92109900	ø 313 x 26 x 56.2		⊕ rim size 16" 70-1-000955→ 05/00→					
				PRO	92083803	ø 280 x 24 x 55.2		⊕ rim size 15" Fist-type cal. Frame saddle					
				PRO	92109803	ø 300 x 26 x 56		⊕ rim size 16" 70-W-000001→ →70-1-000954 05/97→ →05/00					
				PRO	92109903	ø 313 x 26 x 56.2		⊕ rim size 16" 70-1-000955→ 05/00→					
		786700	Ate		2326903	[+] 23269	20.1		Luc		2344605	[+] 23446 16.5	
2.8 VR6	04/00→04/03	150 / 204											

TRANSPORTER IV Bus (70XB, 70XC, 7DB, 7DW) 09/90→04/03

		kW / hp										
786700			Ate		82029300			Luc		82059600		
2.8 VR6	04/00→04/03	150 / 204	Ate		82062900		Teves	Luc		82063300		
					92109900	ø 313 x 26 x 56.2			PRO	92098103	ø 294 x 13.5 x 41	
				PRO	92109903	ø 313 x 26 x 56.2						
786800			Luc		2163501	[–] 21635 18.2	Ø 280 mm vented disc Lucas ⊕ rim size 15" →70-X-250000 →04/99 Frame saddle	Luc		2322416	[+] 23224 17.3	Ø 280 mm ⊕ rim size 15" 70-T-200001→ 01/96→
2.8 VR 6	11/95→04/00	103 / 140	Ate		2188302	[–] 21883 19.6	Ø 280 mm Teves vented disc ⊕ rim size 15" 70-T-200001→ →70-X-250000 01/96→ →04/99 Fist-type cal.	Luc		2344605	[+] 23446 16.5	Ø 294 mm ⊕ rim size 16" 05/97→
								Luc		82059600		70-T-200001→ 01/96→
			Ate		2188501	[+] 21885 20.6	Ø 280 mm vented disc Teves ⊕ rim size 15" 70-Y-000001→ 05/99→ Fist-type cal.	Luc		82063300		
			Ate		2303401	[+] 23034 18.6	Ø 300 mm ⊕ rim size 16" 70-W-000001→ 05/97→			91044600	ø 268 x 56	→70-T-199000 →12/95
			Luc		2317602	[+] 23176 18.2	Ø 280 mm vented disc Lucas ⊕ rim size 15" 70-Y-000001→ 05/99→ Frame saddle	Ben		97008500		→70-T-199000 →12/95
			Luc		82032400		Lucas vented disc ⊕ rim size 15" →70-X-250000 →04/99		PRO	92083903	ø 280 x 12 x 40.3	⊕ rim size 15" 70-T-200001→ 01/96→
			Ate		82062900		Teves		PRO	92098103	ø 294 x 13.5 x 41	⊕ rim size 16" 05/97→
			Ate		82076900		70-T-200001→ 01/96→ ⊕ rim size 15"			94012400	ø 268,0 x 68	→70-T-199000 →12/95
			Ate		82503000		⊕ rim size 16"					
					92058500	ø 282 x 18 x 64.7	⊕ rim size 15" →70-T-199000 →12/95 Fist-type cal.					
					92056000	ø 280 x 24 x 64.7	⊕ rim size 15" →70-T-199000 →12/95 Frame saddle					
				PRO	92083803	ø 280 x 24 x 55.2	⊕ rim size 15" 70-T-200001→ 01/96→ Fist-type cal. Frame saddle					
				PRO	92109803	ø 300 x 26 x 56	⊕ rim size 16" 05/97→ 70-W-000001→					

TRANSPORTER IV Kasten (70XA) 07/90→04/03 → TRANSPORTER IV Box (70XA), Page 1273

TRANSPORTER IV Platform/Chassis (70XD) 07/90→04/03

		kW / hp										
786900			Luc		2012401	[–] 20124 19	Ø 260 mm ⊕ rim size 14" →70-T-199000 →12/95 Fist-type cal.	Luc		2322416	[+] 23224 17.3	Ø 280 mm ⊕ rim size 15" 70-T-200001→ 01/96→
1.9 TD	10/92→04/03	50 / 68	Luc		2147902	[–] 21479 19.2	Ø 282 mm solid disc Lucas ⊕ rim size 15" →70-X-250000 →04/99 Fist-type cal.	Luc		2344605	[+] 23446 16.5	Ø 294 mm ⊕ rim size 16" 05/97→
2.0	07/90→04/03	62 / 84	Luc		2163501	[–] 21635 18.2	Ø 280 mm vented disc Lucas ⊕ rim size 15" →70-X-250000 →04/99 Frame saddle	Luc		82059600		70-T-200001→ 01/96→
			Ate		2188302	[–] 21883 19.6	Ø 280 mm Teves vented disc ⊕ rim size 15" 70-T-200001→ →70-X-250000 01/96→ →04/99 Fist-type cal.	Luc		82063300		
										91044600	ø 268 x 56	→70-T-199000 →12/95
			Luc		2147903	[+] 21479 19.2	Ø 282 mm solid disc Lucas ⊕ rim size 15" 70-Y-000001→ 05/99→ Fist-type cal.	Ben		97008500		→70-T-199000 →12/95
			Ate		2188501	[+] 21885 20.6	Ø 280 mm vented disc Teves ⊕ rim size 15" 70-Y-000001→ 05/99→ Fist-type cal.		PRO	92083903	ø 280 x 12 x 40.3	⊕ rim size 15" 70-T-200001→ 01/96→
			Ate		2303401	[+] 23034 18.6	Ø 300 mm ⊕ rim size 16" 70-W-000001→ →70-1-000954 05/97→ →05/00		PRO	92098103	ø 294 x 13.5 x 41	⊕ rim size 16" 05/97→
			Luc		2317602	[+] 23176 18.2	Ø 280 mm vented disc Lucas ⊕ rim size 15" 70-Y-000001→ 05/99→ Frame saddle			94012400	ø 268,0 x 68	→70-T-199000 →12/95
			Ate		2326903	[+] 23269 20.1	Ø 313 mm ⊕ rim size 16" 70-1-000955→ 05/00→					
			Luc		82032400		Lucas vented disc ⊕ rim size 15" →70-X-250000 →04/99					
			Ate		82029300		⊕ rim size 16" 70-1-000955→ 05/00→					
			Ate		82062900		Teves					
			Ate		82076900		70-T-200001→ 01/96→ ⊕ rim size 15"					
			Ate		82503000		→70-1-000954 →05/00 ⊕ rim size 16"					
					92055900	ø 260 x 16 x 64.2	⊕ rim size 14" →70-T-199000 →12/95 Fist-type cal.					
					92058500	ø 282 x 18 x 64.7	⊕ rim size 15" →70-T-199000 →12/95 Fist-type cal.					
				PRO	92083703	ø 282 x 18 x 55.2	⊕ rim size 15" 70-T-200001→ 01/96→ Fist-type cal.					

TRANSPORTER IV Platform/Chassis (70XD) 07/90→04/03

		kW / hp											
		786900											
1.9 TD	10/92→04/03	50 / 68		92056000	ø 280 x 24 x 64.7	⊕ rim size 15" →70-T-199000 →12/95 Frame saddle							
2.0	07/90→04/03	62 / 84		92109900	ø 313 x 26 x 56.2	⊕ rim size 16" 70-1-000955→ 05/00→							
			PRO	92083803	ø 280 x 24 x 55.2	⊕ rim size 15" 70-T-200001→ 01/96→ Fist-type cal. Frame saddle							
			PRO	92109803	ø 300 x 26 x 56	⊕ rim size 16" 70-W-000001→ →70-1-000954 05/97→ →05/00							
			PRO	92109903	ø 313 x 26 x 56.2	⊕ rim size 16" 70-1-000955→ 05/00→							
		787000	Luc	2147902	[–] 21479 19.2	Ø 282 mm solid disc Lucas ⊕ rim size 15" →70-X-250000 →04/99 Fist-type cal.	Luc		2322416	[+] 23224 17.3	Ø 280 mm ⊕ rim size 15"		
2.4 D	08/97→04/03	55 / 75											
2.5 TDI	05/98→04/03	65 / 88					Luc		2344605	[+] 23446 16.5	Ø 294 mm ⊕ rim size 16"		
2.5 TDI Syncro	05/98→04/03	75 / 102	Luc	2163501	[–] 21635 18.2	Ø 280 mm vented disc Lucas ⊕ rim size 15" →70-X-250000 →04/99 Frame saddle	Luc		82059600				
			Ate	2188302	[–] 21883 19.6	Ø 280 mm Teves vented disc ⊕ rim size 15" →70-X-250000 →04/99 Fist-type cal.	Luc		82063300				
			Luc	2147903	[+] 21479 19.2	Ø 282 mm solid disc Lucas ⊕ rim size 15" 70-Y-000001→ 05/99→ Fist-type cal.		PRO	92083903	ø 280 x 12 x 40.3	⊕ rim size 15"		
			Ate	2188501	[+] 21885 20.6	Ø 280 mm vented disc Teves ⊕ rim size 15" 70-Y-000001→ 05/99→ Fist-type cal.		PRO	92098103	ø 294 x 13.5 x 41	⊕ rim size 16"		
			Ate	2303401	[+] 23034 18.6	Ø 300 mm ⊕ rim size 16" →70-1-000954 →05/00							
			Luc	2317602	[+] 23176 18.2	Ø 280 mm vented disc Lucas ⊕ rim size 15" 70-Y-000001→ 05/99→ Frame saddle							
			Ate	2326903	[+] 23269 20.1	Ø 313 mm ⊕ rim size 16" 70-1-000955→ 05/00→							
			Luc	82032400		Lucas vented disc ⊕ rim size 15" →70-X-250000 →04/99							
			Ate	82029300		⊕ rim size 16" 70-1-000955→ 05/00→							
			Ate	82062900		Teves							
			Ate	82076900		⊕ rim size 15"							
			Ate	82503000		→70-1-000954 →05/00 ⊕ rim size 16"							
				PRO 92083703	ø 282 x 18 x 55.2	⊕ rim size 15" Fist-type cal.							
				92109900	ø 313 x 26 x 56.2	⊕ rim size 16" 70-1-000955→ 05/00→							
				PRO 92083803	ø 280 x 24 x 55.2	⊕ rim size 15" Fist-type cal. Frame saddle							
				PRO 92109803	ø 300 x 26 x 56	⊕ rim size 16" →70-1-000954 →05/00							
				PRO 92109903	ø 313 x 26 x 56.2	⊕ rim size 16" 70-1-000955→ 05/00→							
		787100	Luc	2147902	[–] 21479 19.2	Ø 282 mm solid disc Lucas ⊕ rim size 15" →70-X-250000 →04/99 Fist-type cal.	Luc		2322416	[+] 23224 17.3	Ø 280 mm ⊕ rim size 15" 70-T-200001→ 01/96→		
2.5	11/90→04/03	81 / 110											
2.5 Syncro	10/92→04/03	81 / 110					Luc		2344605	[+] 23446 16.5	Ø 294 mm ⊕ rim size 16" 05/97→		
2.5 TDI	09/95→04/03	75 / 102	Luc	2163501	[–] 21635 18.2	Ø 280 mm vented disc Lucas ⊕ rim size 15" →70-X-250000 →04/99 Frame saddle	Luc		82059600		70-T-200001→ 01/96→		
			Ate	2188302	[–] 21883 19.6	Ø 280 mm Teves vented disc ⊕ rim size 15" 70-T-200001→ →70-X-250000 01/96→ →04/99 Fist-type cal.	Luc		82063300				
			Luc	2147903	[+] 21479 19.2	Ø 282 mm solid disc Lucas ⊕ rim size 15" 70-Y-000001→ 05/99→ Fist-type cal.			91044600	ø 268 x 56	→70-T-199000 →12/95		
			Ate	2188501	[+] 21885 20.6	Ø 280 mm vented disc Teves ⊕ rim size 15" 70-Y-000001→ 05/99→ Fist-type cal.	Ben		97008500		→70-T-199000 →12/95		
			Ate	2303401	[+] 23034 18.6	Ø 300 mm ⊕ rim size 16" 70-W-000001→ →70-1-000954 05/97→ →05/00		PRO	92083903	ø 280 x 12 x 40.3	⊕ rim size 15" 70-T-200001→ 01/96→		
			Luc	2317602	[+] 23176 18.2	Ø 280 mm vented disc Lucas ⊕ rim size 15" 70-Y-000001→ 05/99→ Frame saddle		PRO	92098103	ø 294 x 13.5 x 41	⊕ rim size 16" 05/97→		
			Ate	2326903	[+] 23269 20.1	Ø 313 mm ⊕ rim size 16" 70-1-000955→ 05/00→			94012400	ø 268,0 x 68	→70-T-199000 →12/95		
			Luc	82032400		Lucas vented disc ⊕ rim size 15" →70-X-250000 →04/99							
			Ate	82029300		⊕ rim size 16" 70-1-000955→ 05/00→							
			Ate	82062900		Teves							
			Ate	82076900		70-T-200001→ 01/96→ ⊕ rim size 15"							

kW / hp

TRANSPORTER IV Platform/Chassis (70XD) 07/90→04/03

787100			Ate		82503000		→70-1-000954 →05/00 ⊕ rim size 16"					
2.5	11/90→04/03	81 / 110			92058500	ø 282 x 18 x 64.7	⊕ rim size 15" →70-T-199000 →12/95 Fist-type cal.					
2.5 Syncro	10/92→04/03	81 / 110		PRO	92083703	ø 282 x 18 x 55.2	⊕ rim size 15" 70-T-200001→ 01/96→ Fist-type cal.					
2.5 TDI	09/95→04/03	75 / 102			92056000	ø 280 x 24 x 64.7	⊕ rim size 15" →70-T-199000 →12/95 Frame saddle					
					92109900	ø 313 x 26 x 56.2	⊕ rim size 16" 70-1-000955→ 05/00→					
				PRO	92083803	ø 280 x 24 x 55.2	⊕ rim size 15" 70-T-200001→ 01/96→ Fist-type cal. Frame saddle					
				PRO	92109803	ø 300 x 26 x 56	⊕ rim size 16" 70-W-000001→ →70-1-000954 05/97→ →05/00					
				PRO	92109903	ø 313 x 26 x 56.2	⊕ rim size 16" 70-1-000955→ 05/00→					
787200			Luc		2147902	[–] 21479 19.2	Ø 282 mm solid disc Lucas ⊕ rim size 15" →70-X-250000 →04/99 Fist-type cal.	Luc		2322416	[+] 23224 17.3	Ø 280 mm ⊕ rim size 15"
2.5	08/96→04/03	85 / 115						Luc		2344605	[+] 23446 16.5	Ø 294 mm ⊕ rim size 16" 05/97→
2.5 Syncro	08/96→04/03	85 / 115	Luc		2163501	[–] 21635 18.2	Ø 280 mm vented disc Lucas ⊕ rim size 15" →70-X-250000 →04/99 Frame saddle	Luc		82059600		
			Ate		2188302	[–] 21883 19.6	Ø 280 mm Teves vented disc ⊕ rim size 15" →70-X-250000 →04/99 Fist-type cal.	Luc		82063300		
			Luc		2147903	[+] 21479 19.2	Ø 282 mm solid disc Lucas ⊕ rim size 15" 70-Y-000001→ 05/99→ Fist-type cal.		PRO	92083903	ø 280 x 12 x 40.3	⊕ rim size 15"
			Ate		2188501	[+] 21885 20.6	Ø 280 mm vented disc Teves ⊕ rim size 15" 70-Y-000001→ 05/99→ Fist-type cal.		PRO	92098103	ø 294 x 13.5 x 41	⊕ rim size 16" 05/97→
			Ate		2303401	[+] 23034 18.6	Ø 300 mm ⊕ rim size 16" 70-W-000001→ →70-1-000954 05/97→ →05/00					
			Luc		2317602	[+] 23176 18.2	Ø 280 mm vented disc Lucas ⊕ rim size 15" 70-Y-000001→ 05/99→ Frame saddle					
			Ate		2326903	[+] 23269 20.1	Ø 313 mm ⊕ rim size 16" 70-1-000955→ 05/00→					
			Luc		82032400		Lucas vented disc ⊕ rim size 15" →70-X-250000 →04/99					
			Ate		82029300		⊕ rim size 16" 70-1-000955→ 05/00→					
			Ate		82062900		Teves					
			Ate		82076900		⊕ rim size 15"					
			Ate		82503000		→70-1-000954 →05/00 ⊕ rim size 16"					
				PRO	92083703	ø 282 x 18 x 55.2	⊕ rim size 15" Fist-type cal.					
					92109900	ø 313 x 26 x 56.2	⊕ rim size 16" 70-1-000955→ 05/00→					
				PRO	92083803	ø 280 x 24 x 55.2	⊕ rim size 15" Fist-type cal. Frame saddle					
				PRO	92109803	ø 300 x 26 x 56	⊕ rim size 16" 70-W-000001→ →70-1-000954 05/97→ →05/00					
				PRO	92109903	ø 313 x 26 x 56.2	⊕ rim size 16" 70-1-000955→ 05/00→					
787300			Luc		2163501	[–] 21635 18.2	Ø 280 mm vented disc Lucas ⊕ rim size 15" →70-X-250000 →04/99 Frame saddle	Luc		2322416	[+] 23224 17.3	Ø 280 mm ⊕ rim size 15"
2.8	05/96→05/00	103 / 140						Luc		2344605	[+] 23446 16.5	Ø 294 mm ⊕ rim size 16" 05/97→
			Ate		2188302	[–] 21883 19.6	Ø 280 mm Teves vented disc ⊕ rim size 15" →70-X-250000 →04/99 Fist-type cal.	Luc		82059600		
			Ate		2188501	[+] 21885 20.6	Ø 280 mm vented disc Teves ⊕ rim size 15" 70-Y-000001→ 05/99→ Fist-type cal.	Luc		82063300		
			Ate		2303401	[+] 23034 18.6	Ø 300 mm ⊕ rim size 16" 70-W-000001→ 05/97→		PRO	92083903	ø 280 x 12 x 40.3	⊕ rim size 15"
			Luc		2317602	[+] 23176 18.2	Ø 280 mm vented disc Lucas ⊕ rim size 15" 70-Y-000001→ 05/99→ Frame saddle		PRO	92098103	ø 294 x 13.5 x 41	⊕ rim size 16" 05/97→
			Ate		2326903	[+] 23269 20.1	Ø 313 mm ⊕ rim size 16" 70-1-000955→ 05/00→					
			Luc		82032400		Lucas vented disc ⊕ rim size 15" →70-X-250000 →04/99					
			Ate		82029300		⊕ rim size 16" 70-1-000955→ 05/00→					
			Ate		82062900		Teves					
			Ate		82076900		⊕ rim size 15"					

T - Z

kW / hp										
TRANSPORTER IV Platform/Chassis (70XD) 07/90→04/03										
787300										
2.8 05/96→05/00 103 / 140	Ate		82503000		⊕ rim size 16"					
			92109900	ø 313 x 26 x 56.2	⊕ rim size 16" 70-1-000955→ 05/00→					
		PRO	92083803	ø 280 x 24 x 55.2	⊕ rim size 15" Fist-type cal. Frame saddle					
		PRO	92109803	ø 300 x 26 x 56	⊕ rim size 16" 70-W-000001→ 05/97→					
		PRO	92109903	ø 313 x 26 x 56.2	⊕ rim size 16" 70-1-000955→ 05/00→					
787400										
2.8 VR6 06/00→04/03 150 / 204	Ate		2326903	[+] 23269 20.1		Luc		2344605	[+] 23446 16.5	
	Ate		82029300			Luc		82059600		
	Ate		82062900		Teves	Luc		82063300		
			92109900	ø 313 x 26 x 56.2			PRO	92098103	ø 294 x 13.5 x 41	
		PRO	92109903	ø 313 x 26 x 56.2						
TRANSPORTER IV Pritsche/Fahrgestell (70XD) 07/90→04/03 → TRANSPORTER IV Platform/Chassis (70XD), Page 1279										
TRANSPORTER V Box (7HA, 7HH, 7EA, 7EH) 04/03→11/09										
787500										
1.9 TDI 04/03→11/09 63 / 85	Ate		2374702	[–] 23747 20.1		Luc		2332601	[–] 23326 17.7	
1.9 TDI 04/03→11/09 77 / 105	Ate		2374602	[+] 23746 20.1		Luc	epad	2332681	[–] 23326 17.7	
1.9 TDI 01/06→11/09 62 / 84										
1.9 TDI 06/06→11/09 75 / 102										
2.0 11/03→ 85 / 115	Ate		82076900			Luc		2332602	[+] 23326 17.7	
2.0 TDI 09/09→ 62 / 84		PRO	92121203	ø 308 x 29.5 x 55.6		Luc		82054900		
2.0 TDI 09/09→ 75 / 102						Luc		82063500		
2.0 TDI 09/09→ 103 / 140							PRO	92121403	ø 294 x 22 x 44.3	
2.0 TDI 05/10→ 100 / 136								91058700	ø 185 x 30	
2.0 TDI 05/11→ 84 / 114								97032200		
2.0 TDI 4motion 09/09→ 103 / 140										
2.0 TDI 4motion 05/10→ 100 / 136										
2.5 TDI 04/03→11/09 96 / 130										
2.5 TDI 04/03→11/09 128 / 174										
2.5 TDI 4motion 07/04→11/09 96 / 130										
2.5 TDI 4motion 07/04→11/09 128 / 174										
787600										
2.0 BiTDI 09/09→ 132 / 180	Ate		2462301	[+] 24623 18.1		Luc		2332601	[–] 23326 17.7	
2.0 BiTDI 4motion 09/09→ 132 / 180		PRO	92230303	ø 340 x 32.2 x 55.4		Luc	epad	2332681	[–] 23326 17.7	
2.0 TSI 05/11→ 150 / 204						Luc		2332602	[+] 23326 17.7	
2.0 TSI 07/12→ 110 / 150						Luc		82054900		
2.0 TSI 4motion 07/11→ 150 / 204							PRO	92121403	ø 294 x 22 x 44.3	
787700										
3.2 4motion 11/03→11/09 173 / 235	Ate		2374701	[–] 23747 18		Ate		2436801	[+] 24368 19	
3.2 V6 04/03→06/04 170 / 231	Ate		2374601	[+] 23746 18		Ate		82077100		
3.2 V6 02/04→11/09 173 / 235	Ate		82077000				PRO	92121903	ø 314 x 22 x 75.9	
		PRO	92121303	ø 333 x 32.5 x 55.9				91058700	ø 185 x 30	
								97032200		
TRANSPORTER V Bus (7HB, 7HJ, 7EB, 7EJ, 7EF) 04/03→11/09										
787800										
1.9 TDI 04/03→11/09 63 / 85	Ate		2374702	[–] 23747 20.1		Luc		2332601	[–] 23326 17.7	
1.9 TDI 04/03→11/09 77 / 105	Ate		2374602	[+] 23746 20.1		Luc	epad	2332681	[–] 23326 17.7	
1.9 TDI 01/06→11/09 62 / 84										
1.9 TDI 06/06→11/09 75 / 102										
2.0 11/03→ 85 / 115	Ate		82076900			Luc		2332602	[+] 23326 17.7	
2.0 TDI 09/09→ 62 / 84		PRO	92121203	ø 308 x 29.5 x 55.6		Luc		82054900		
2.0 TDI 09/09→ 75 / 102						Luc		82063500		
2.0 TDI 09/09→ 103 / 140							PRO	92121403	ø 294 x 22 x 44.3	
2.0 TDI 05/10→ 100 / 136								91058700	ø 185 x 30	
2.0 TDI 05/11→ 84 / 114								97032200		
2.0 TDI 4motion 09/09→ 103 / 140										
2.0 TDI 4motion 05/10→ 100 / 136										
2.5 09/03→12/04 82 / 112										
2.5 TDi 11/03→11/09 120 / 163										
2.5 TDI 04/03→11/09 96 / 130										
2.5 TDI 04/03→11/09 128 / 174										
2.5 TDI 4motion 07/04→11/09 96 / 130										
2.5 TDI 4motion 07/04→11/09 128 / 174										
787900										
2.0 BiTDI 09/09→ 132 / 180	Ate		2462301	[+] 24623 18.1		Luc		2332601	[–] 23326 17.7	
2.0 BiTDI 4motion 09/09→ 132 / 180										
2.0 TSI 05/11→ 150 / 204										

		kW / hp									
TRANSPORTER V Bus (7HB, 7HJ, 7EB, 7EJ, 7EF) 04/03→11/09											
2.0 TSI	07/12→	110 / 150	PRO	92230303	ø 340 x 32.2 x 55.4		Luc	epad	2332681	[–] 23326 17.7	
2.0 TSI 4motion	07/11→	150 / 204					Luc		2332602	[+] 23326 17.7	
							Luc		82054900		
								PRO	92121403	ø 294 x 22 x 44.3	
		788000	Ate	2374701	[–] 23747 18		Ate		2436801	[+] 24368 19	
3.2 V6	02/04→06/04	170 / 231									
3.2 V6	02/04→11/09	173 / 235	Ate	2374601	[+] 23746 18		Ate		82077100		
3.2 V6 4motion	11/03→11/09	173 / 235	Ate	82077000				PRO	92121903	ø 314 x 22 x 75.9	
			PRO	92121303	ø 333 x 32.5 x 55.9				91058700	ø 185 x 30	
									97032200		
TRANSPORTER V Kasten (7HA, 7HH, 7EA, 7EH) 04/03→11/09 → TRANSPORTER V Box (7HA, 7HH, 7EA, 7EH), Page 1282											
TRANSPORTER V Platform/Chassis (7JD, 7JE, 7JL, 7JY, 7JZ, 7FD 04/03→11/09											
		788100	Ate	2374702	[–] 23747 20.1		Luc		2332601	[–] 23326 17.7	
1.9 TDI	04/03→11/09	63 / 85									
1.9 TDI	04/03→11/09	77 / 105	Ate	2374602	[+] 23746 20.1		Luc	epad	2332681	[–] 23326 17.7	
1.9 TDI	01/06→11/09	62 / 84									
1.9 TDI	06/06→11/09	75 / 102	Ate	82076900			Luc		2332602	[+] 23326 17.7	
2.0	11/03→	85 / 115									
2.0 TDI	09/09→	62 / 84	PRO	92121203	ø 308 x 29.5 x 55.6		Luc		82054900		
2.0 TDI	09/09→	75 / 102									
2.0 TDI	09/09→	103 / 140					Luc		82063500		
2.0 TDI	05/10→	100 / 136									
2.0 TDI	05/11→	84 / 114						PRO	92121403	ø 294 x 22 x 44.3	
2.0 TDI 4motion	09/09→	103 / 140									
2.0 TDI 4motion	05/10→	100 / 136							91058700	ø 185 x 30	
2.5 TDI	04/03→11/09	96 / 130									
2.5 TDI	04/03→11/09	128 / 174							97032200		
2.5 TDI 4motion	04/04→11/09	128 / 174									
2.5 TDI 4motion	07/04→11/09	96 / 130									
		788200	Ate	2462301	[+] 24623 18.1		Luc		2332601	[–] 23326 17.7	
2.0 BiTDI	09/09→	132 / 180									
2.0 BiTDI 4motion	09/09→	132 / 180	PRO	92230303	ø 340 x 32.2 x 55.4		Luc	epad	2332681	[–] 23326 17.7	
2.0 TSI	07/12→	110 / 150									
							Luc		2332602	[+] 23326 17.7	
							Luc		82054900		
								PRO	92121403	ø 294 x 22 x 44.3	
		788300	Ate	2374701	[–] 23747 18		Ate		2436801	[+] 24368 19	
3.2 4motion	11/03→11/09	170 / 231									
3.2 V6	08/03→05/06	173 / 235	Ate	2374601	[+] 23746 18		Ate		82077100		
3.2 V6	02/04→11/09	170 / 231									
			Ate	82077000				PRO	92121903	ø 314 x 22 x 75.9	
			PRO	92121303	ø 333 x 32.5 x 55.9				91058700	ø 185 x 30	
									97032200		
TRANSPORTER V Pritsche/Fahrgestell (7JD, 7JE, 7JL, 7JY, 7JZ, 04/03→11/09 → TRANSPORTER V Platform/Chassis (7JD, 7JE, 7JL, 7JY, 7JZ, 7FD, Page 1283											
TRANSPORTER Mk IV Box (70XA) 07/90→04/03 → TRANSPORTER IV Box (70XA), Page 1273											
TRANSPORTER Mk IV Kasten (70XA) 07/90→04/03 → TRANSPORTER IV Box (70XA), Page 1273											
TRANSPORTER Mk IV Platform/Chassis (70XD) 07/90→04/03 → TRANSPORTER IV Platform/Chassis (70XD), Page 1279											
TRANSPORTER Mk IV Pritsche/Fahrgestell (70XD) 07/90→04/03 → TRANSPORTER IV Platform/Chassis (70XD), Page 1279											
TRANSPORTER Mk V Box (7HA, 7HH, 7EA, 7EH) 04/03→11/09 → TRANSPORTER V Box (7HA, 7HH, 7EA, 7EH), Page 1282											
TRANSPORTER Mk V Kasten (7HA, 7HH, 7EA, 7EH) 04/03→11/09 → TRANSPORTER V Box (7HA, 7HH, 7EA, 7EH), Page 1282											
TRANSPORTER Mk V Platform/Chassis (7JD, 7JE, 7JL, 7JY, 7JZ, 04/03→11/09 → TRANSPORTER V Platform/Chassis (7JD, 7JE, 7JL, 7JY, 7JZ, 7FD, Page 1283											
TRANSPORTER Mk V Pritsche/Fahrgestell (7JD, 7JE, 7JL, 7JY, 7 04/03→11/09 → TRANSPORTER V Platform/Chassis (7JD, 7JE, 7JL, 7JY, 7JZ, 7FD, Page 1283											

T - Z

		kW / hp											
TRANSPORTER T4 Bus (70XB, 70XC, 7DB, 7DW) 09/90→04/03 → TRANSPORTER IV Bus (70XB, 70XC, 7DB, 7DW), Page 1276													
TRANSPORTER T4 Kasten (70XA) 07/90→04/03 → TRANSPORTER IV Box (70XA), Page 1273													
TRANSPORTER T4 Pritsche/Fahrgestell (70XD) 07/90→04/03 → TRANSPORTER IV Platform/Chassis (70XD), Page 1279													
TRANSPORTER T5 Bus (7HB, 7HJ, 7EB, 7EJ, 7EF) 04/03→11/09 → TRANSPORTER V Bus (7HB, 7HJ, 7EB, 7EJ, 7EF), Page 1282													
TRANSPORTER T5 Kasten (7HA, 7HH, 7EA, 7EH) 04/03→11/09 → TRANSPORTER V Box (7HA, 7HH, 7EA, 7EH), Page 1282													
TRANSPORTER T5 Pritsche/Fahrgestell (7JD, 7JE, 7JL, 7JY, 7JZ 04/03→11/09 → TRANSPORTER V Platform/Chassis (7JD, 7JE, 7JL, 7JY, 7JZ, 7FD, Page 1283													
UP 08/11→													
		788400	Ate		**2313001**	[–] 23130 19.7				**91044700**	ø 200 x 40	→05/12 →2012-05-27	
1.0	08/11→	44 / 60											
1.0	08/11→	55 / 75	Ate	epad	**2313081**	[–] 23130 19.7				**91080100**	ø 228.4 x 32.5	05/12→ 2012-05-28→	
				PRO	**92239403**	ø 255.9 x 22 x 36.6		Ate		**97006500**			
					TPM0008					**84044706**	bore ø 17.5 ø 200 x 40	→05/12 →2012-05-27	
										TPM0008			
										94022800	ø 200,0 x 50.5		
		788500	Ate		**2313001**	[–] 23130 19.7	PR 1LA			**91080100**	ø 228.4 x 32.5		
1.0	01/14→	56 / 75											
1.0 Flex	01/14→	62 / 82	Ate	epad	**2313081**	[–] 23130 19.7	PR 1LA	Ate		**97006500**			
			Ate		**2313101**	[+] 23131 19.7	PR 1ZQ			**TPM0008**			
			Ate	epad	**2313181**	[+] 23131 19.7	PR 1ZQ			**94022800**	ø 200,0 x 50.5		
				PRO	**92239403**	ø 255.9 x 22 x 36.6							
					TPM0008								
		788600	Ate		**2313001**	[–] 23130 19.7				**91080100**	ø 228.4 x 32.5		
1.0 EcoFuel	11/12→	50 / 68											
			Ate	epad	**2313081**	[–] 23130 19.7		Ate		**97006500**			
				PRO	**92239403**	ø 255.9 x 22 x 36.6				**TPM0008**			
					TPM0008					**94022800**	ø 200,0 x 50.5		
		788700	Ate		**2313101**	[+] 23131 19.7	PR 1ZQ, 1LA			**91080100**	ø 228.4 x 32.5		
e-Up	07/13→	60 / 82											
			Ate	epad	**2313181**	[+] 23131 19.7	PR 1ZQ	Ate		**97006500**			
				PRO	**92239403**	ø 255.9 x 22 x 36.6				**TPM0008**			
					TPM0008					**94022800**	ø 200,0 x 50.5		
VENTO III (1K2) 08/05→10/10 → JETTA III (1K2), Page 1231													
VENTO IV (162, 163) 04/10→ → JETTA IV (162, 163), Page 1232													
VENTO V Variant (1K5) 06/07→07/09 → GOLF V Variant (1K5), Page 1222													
VENTO Stufenheck (60) 05/10→ → POLO Saloon, Page 1261													
VOYAGE 07/08→													
		788800	VW		**2186602**	[–] 21866 17.2	PR 1LF,1LA			**91044700**	ø 200 x 40		
1.0 Flex	07/08→	56 / 76											
1.6	10/08→	74 / 101											
1.6 Flex	07/08→	74 / 101	Ate		**82062900**			Ate		**97006500**			
				PRO	**92072003**	ø 239 x 18 x 34.1				**94022800**	ø 200,0 x 50.5		

		kW / hp											
PASSAT Saloon (B5) 01/01→04/09													
		788900								**92057503**	ø 245 x 10 x 63.9		
1.8 Turbo	01/01→04/09	110 / 148											
2.0	02/03→04/09	85 / 114											
2.8	12/01→12/06	140 / 188											
PASSAT Stufenheck (B5) 01/01→04/09 → PASSAT Saloon (B5), Page 1284													

kW / hp												
POLO Hatchback 01/02→03/06												
789000												
1.4 01/02→03/06 55 / 74		PRO	92082203	ø 256 x 22 x 36.5				PRO	92082503	ø 232 x 9 x 39.3		
POLO JINQU Saloon 12/07→												
789100												
1.6 12/07→ 77 / 105		PRO	92082203	ø 256 x 22 x 36.5								
POLO JINQU Stufenheck 12/07→ → POLO JINQU Saloon, Page 1285												
POLO Saloon 01/02→03/06												
789200												
1.4 06/03→03/06 55 / 74		PRO	92082203	ø 256 x 22 x 36.5				PRO	92082503	ø 232 x 9 x 39.3		
1.6 01/02→01/06 74 / 99												
POLO Schrägheck 01/02→03/06 → POLO Hatchback, Page 1285												
POLO Stufenheck 01/02→03/06 → POLO Saloon, Page 1285												
SANTANA 2000 04/96→03/04												
789300												
1.8 04/96→03/04 72 / 97		PRO	92036803	ø 256 x 20 x 38.7								
SANTANA 3000 03/04→10/07												
789400												
1.8 03/04→10/07 72 / 97		PRO	92036803	ø 256 x 20 x 38.7								
1.8 06/05→10/07 74 / 99												
TIGUAN 03/10→												
789500	Ate		2433301	[+] 24333 20.6			Luc		82509000			
2.0 TSI 4motion 03/10→ 147 / 200	Ate		82062900					PRO	92140803	ø 282 x 12 x 48.5		
	Ate		82076800						TPM0008			
		PRO	92120503	ø 312 x 25 x 49.7								
			TPM0008									

kW / hp												
C30 10/06→12/12												
789600	Ate		2372301	[–] 23723 18.2			Ate		2521201	[–] 25212 16.1		
1.6 10/06→12/12 74 / 100												
1.6 D 10/06→12/12 80 / 109	Ate	epad	2372381	[–] 23723 18.2			Ate	epad	2521281	[–] 25212 16.1		
1.6 D2 10/10→12/12 84 / 115												
1.8 10/06→12/12 92 / 125												
1.8 FlexFuel 01/07→12/12 92 / 125	Ate		82032000				Ate		82062900			
2.0 10/06→12/12 107 / 145												
2.0 D 10/06→12/12 100 / 136	Ate		82062900				Ate		82503500			
2.0 FlexFuel 01/10→12/12 107 / 146												
2.4 i 10/06→12/12 125 / 170												
D3 10/10→12/12 110 / 150		PRO	92141203	ø 278 x 25 x 48.5	15" -brake			PRO	92133803	ø 280 x 10.9 x 40.8		
D4 10/10→12/12 130 / 177												
D5 10/06→12/12 120 / 163		PRO	92141303	ø 300 x 25 x 48.5	16" -brake							
D5 10/06→12/12 132 / 180												
T5 10/06→12/12 162 / 220												
T5 03/07→12/12 169 / 230												
789700	Ate		2372301	[–] 23723 18.2			Ate		2521201	[–] 25212 16.1		
Electric 12/10→12/12 82 / 112												
	Ate	epad	2372381	[–] 23723 18.2			Ate	epad	2521281	[–] 25212 16.1		
	Ate		82032000				Ate		82062900			
	Ate		82062900				Ate		82503500			
		PRO	92141203	ø 278 x 25 x 48.5	15" -brake							
		PRO	92141303	ø 300 x 25 x 48.5	16" -brake							
C70 I Cabriolet 03/98→10/05 → C70 I Convertible, Page 1285												
C70 I Convertible 03/98→10/05												
789800	Ate		2149201	[–] 21492 19.5	16" -brake		Ate		2075506	[–] 20755 15		
2.0 03/98→10/05 132 / 180												
2.0 T 03/98→10/05 166 / 226	Ate		2310601	[–] 23106 18.9	17" -brake		Ate		82026300			
2.0 T 03/00→10/05 120 / 163												
2.3 T5 03/98→10/05 176 / 239	Ate		2127304	[o] 21273 19.5	15" -brake			PRO	92066803	ø 295 x 9.6 x 72		
2.3 T5 07/02→10/05 180 / 245												
2.4 09/04→10/05 191 / 260	Ate		82030900		17" -brake				91046000	ø 177.8 x 25		
2.4 T 07/02→10/05 147 / 200												
2.5 06/98→10/05 125 / 170	Ate		82032000		15" / 16" -brake				97008700			
2.5 T 03/98→10/05 142 / 193												
	Ate		82062900									

kW / hp

C70 I Convertible 03/98→10/05

		789800			92092300	ø 302 x 26 x 50.5	16" -brake						
2.0	03/98→10/05	132 / 180		PRO	92066703	ø 280 x 26 x 50.5	15" -brake						
2.0 T	03/98→10/05	166 / 226											
2.0 T	03/00→10/05	120 / 163											
2.3 T5	03/98→10/05	176 / 239											
2.3 T5	07/02→10/05	180 / 245											
2.4	09/04→10/05	191 / 260											
2.4 T	07/02→10/05	147 / 200											
2.5	06/98→10/05	125 / 170											
2.5 T	03/98→10/05	142 / 193											
		789900	Ate		2149201	[–] 21492 19.5	16" -brake	Ate		2075506	[–] 20755 15		
2.3	09/02→12/03	147 / 200	Ate		2310601	[–] 23106 18.9	17" -brake		PRO	92066803	ø 295 x 9.6 x 72		
			Ate		2127304	[o] 21273 19.5	15" -brake						
				PRO	92066703	ø 280 x 26 x 50.5	15" -brake						

C70 I Coupe 03/97→09/02

		790000	Ate		2149201	[–] 21492 19.5	16" -brake	Ate		2075506	[–] 20755 15		
2.0	03/97→09/02	132 / 180											
2.0 T	03/97→09/02	166 / 226	Ate		2310601	[–] 23106 18.9	17" -brake	Ate		82026300			
2.0 T	03/00→09/02	120 / 163											
2.3 T-5	03/97→09/02	176 / 240	Ate		2127304	[o] 21273 19.5	15" -brake		PRO	92066803	ø 295 x 9.6 x 72		
2.5	03/99→09/02	121 / 165											
2.5	05/99→09/02	125 / 170											
2.5 T	03/97→09/02	142 / 193	Ate		82030900		17" -brake			91046000	ø 177.8 x 25		
			Ate		82032000		15" / 16" -brake			97008700			
			Ate		82062900								
					92092300	ø 302 x 26 x 50.5	16" -brake						
				PRO	92066703	ø 280 x 26 x 50.5	15" -brake						

C70 II Cabriolet 03/06→ → C70 II Convertible, Page 1286

C70 II Convertible 03/06→

		790100	Ate		2372301	[–] 23723 18.2	15" -brake 16" -brake	Ate		2521201	[–] 25212 16.1		
2.0 D	01/08→	100 / 136											
2.4	03/06→	103 / 140	Ate	epad	2372381	[–] 23723 18.2	15" -brake 16" -brake	Ate	epad	2521281	[–] 25212 16.1		
2.4 D	03/07→	120 / 163											
2.4 i	03/06→	125 / 170	Ate		2391201	[–] 23912 18.5	16,5" -brake	Ate		82062900			
D3	10/10→	110 / 150											
D4	10/10→	130 / 177											
D5	03/06→	132 / 180	Ate		82032000			Ate		82503500			
T5	03/06→	162 / 220											
T5	03/07→	169 / 230	Ate		82062900				PRO	92133803	ø 280 x 10.9 x 40.8		
					92149100	ø 320 x 25 x 48.5	16,5" -brake						
				PRO	92141203	ø 278 x 25 x 48.5	15" -brake						
				PRO	92141303	ø 300 x 25 x 48.5	16" -brake						
				PRO	92149103	ø 320 x 25 x 48.5	16,5" -brake						

S40 I (VS) 07/95→06/04

		790200	Luc		2192001	[+] 21920 15.1	→06/97	Luc		2354901	[+] 23549 16.8		
1.6	09/95→08/99	77 / 105											
1.8	07/95→08/99	85 / 115	Luc		2198302	[+] 21983 17.3	07/97→	Luc		82058900			
1.9 T4	05/97→07/00	147 / 200											
1.9 TD	07/95→08/99	66 / 90	Luc		82058900			Luc		82063300			
2.0	07/95→08/99	103 / 140											
2.0	07/95→12/03	100 / 136	Luc		82063500				PRO	92083003	ø 260 x 10 x 41		
					92082900	ø 256 x 24 x 45.5	→06/97						
					92103900	ø 256 x 24 x 45	→06/97						
				PRO	92100403	ø 281 x 24 x 45.5	07/97→						
		790300	Luc		2198302	[+] 21983 17.3		Luc		2354901	[+] 23549 16.8		
1.6	03/99→12/03	80 / 109											
1.8	03/99→12/03	90 / 122	Luc		82058900			Luc		82058900			
1.8	06/01→08/03	85 / 116											
1.8 i	03/98→12/03	92 / 125	Luc		82063500			Luc		82063300			
1.8 i	06/01→12/03	90 / 122											
1.9 DI	03/99→07/00	70 / 95											
1.9 DI	07/00→12/03	75 / 102											
1.9 DI	07/00→12/03	85 / 115		PRO	92100403	ø 281 x 24 x 45.5			PRO	92083003	ø 260 x 10 x 41		
2.0 D	12/02→06/04	100 / 136											
2.0 T	10/97→12/03	118 / 160											
2.0 T	07/00→06/01	121 / 165											
2.0 T	06/01→12/03	120 / 163											

T - Z

		kW / hp											
S40 I (VS) 07/95→06/04													
2.0 T4	07/00→12/03	147 / 200	Luc		2198302	[+] 21983 17.3		Luc		2354901	[+] 23549 16.8	
			Luc		82058900			Luc		82058900		
			Luc		82063500			Luc		82063300		
				PRO	92100403	ø 281 x 24 x 45.5			PRO	92083003	ø 260 x 10 x 41	
		790400	Luc		2198302	[+] 21983 17.3		Luc		2354901	[+] 23549 16.8	
1.9	09/02→12/03	127 / 173		PRO	92100403	ø 281 x 24 x 45.5			PRO	92083003	ø 260 x 10 x 41	
S40 I Saloon (VS) 07/95→06/04 → S40 I (VS), Page 1286													
S40 I Stufenheck (VS) 07/95→06/04 → S40 I (VS), Page 1286													
S40 II (MS) 09/03→12/04													
		790500	Ate		2372301	[–] 23723 18.2	15" -brake 16" -brake	Ate		2521201	[–] 25212 16.1	
1.6	01/05→	74 / 101										
1.6 D	01/05→	81 / 110										
1.6 D2	10/10→	84 / 115	Ate	epad	2372381	[–] 23723 18.2	15" -brake 16" -brake	Ate	epad	2521281	[–] 25212 16.1	
1.8	04/04→	92 / 125										
1.8 FlexFuel	01/06→	92 / 125	Ate		2391201	[–] 23912 18.5	17" -brake	Ate		82062900		
2.0	10/06→	107 / 146										
2.0 D	01/04→	100 / 136	Ate		82032000			Ate		82503500		
2.0 D4	07/05→	96 / 131										
2.0 F	10/06→	107 / 146										
2.4	01/04→	103 / 140	Ate		82062900				PRO	92133803	ø 280 x 10.9 x 40.8	
2.4	01/04→	125 / 170										
2.4 AWD	08/06→	125 / 170										
2.4 D5	03/06→	132 / 179			92149100	ø 320 x 25 x 48.5	17" -brake					
D3	10/10→	110 / 150										
D4	10/10→	130 / 177		PRO	92141203	ø 278 x 25 x 48.5	15" -brake					
T5	01/04→	162 / 220										
T5	03/07→	169 / 230		PRO	92141303	ø 300 x 25 x 48.5	16" -brake					
T5 AWD	04/04→	162 / 220										
T5 AWD	03/07→	169 / 230		PRO	92149103	ø 320 x 25 x 48.5	17" -brake					
		790600	Luc		2198302	[+] 21983 17.3		Luc		2354901	[+] 23549 16.8	
1.9	09/03→12/04	127 / 173		PRO	92100403	ø 281 x 24 x 45.5			PRO	92083003	ø 260 x 10 x 41	
S40 II Saloon (MS) 09/03→12/04 → S40 II (MS), Page 1287													
S40 II Stufenheck (MS) 09/03→12/04 → S40 II (MS), Page 1287													
S60 I 07/00→04/10													
		790700	Ate		2307303	[–] 23073 18.9	15" -brake 16" -brake	Ate		2307602	[–] 23076 17.5	
2.0 T	07/00→04/10	132 / 180										
2.3 T5	07/00→09/02	195 / 265	Ate	epad	2307381	[–] 23073 18.9	15" -brake 16" -brake	Ate	epad	2307681	[–] 23076 17.5	
2.4	11/00→04/10	103 / 140										
2.4	11/00→04/10	125 / 170										
2.4	01/05→10/06	132 / 180	Ate		2307401	[–] 23074 18.9	17" -brake	Ate		82029300		
2.4 AWD	02/04→04/10	191 / 260										
2.4 Bifuel (CNG)	06/02→04/10	103 / 140	Ate		82032000			Ate		82062900		
2.4 Bifuel (LPG)	06/02→04/10	103 / 140										
2.4 D	12/01→04/10	96 / 130										
2.4 D	05/05→12/06	90 / 122	Ate		82062900				PRO	92100703	ø 288 x 12 x 65	
2.4 D	09/05→01/09	120 / 163										
2.4 D	09/05→04/10	93 / 126										
2.4 D5	07/01→04/10	120 / 163		PRO	92100503	ø 285.5 x 26 x 50.3	15" -brake			91062300	ø 178 x 25	
2.4 D5	09/05→04/10	136 / 185										
2.4 T	11/00→04/10	147 / 200		PRO	92100603	ø 305 x 28 x 50.3	16" -brake			97034800		
2.4 T	01/01→04/10	142 / 193										
2.4 T5	04/04→04/10	191 / 260		PRO	92178203	ø 320 x 28 x 50.2	17" -brake					
2.4 T AWD	11/01→04/10	147 / 200										
2.5 T	02/04→04/10	154 / 210										
2.5 T AWD	04/04→04/10	154 / 210										
T5	11/00→04/10	184 / 250										
		790800	Ate		2307303	[–] 23073 18.9	15" -brake 16" -brake	Ate		2307602	[–] 23076 17.5	
2.4 T5	09/05→12/09	191 / 260										
			Ate	epad	2307381	[–] 23073 18.9	15" -brake 16" -brake	Ate	epad	2307681	[–] 23076 17.5	
			Ate		2307401	[–] 23074 18.9	17" -brake	Ate		82029300		
			Ate		82032000				PRO	92100703	ø 288 x 12 x 65	
				PRO	92100503	ø 285.5 x 26 x 50.3	15" -brake			91062300	ø 178 x 25	
				PRO	92100603	ø 305 x 28 x 50.3	16" -brake			97034800		
				PRO	92178203	ø 320 x 28 x 50.2	17" -brake					
		790900	Bre		2309201	[+] 23092 16		Bre		2138102	[–] 21381 15	
2.5 AWD	09/03→04/10	224 / 300										
R 2,5 T AWD	03/03→04/10	221 / 300		PRO	92178103	ø 330 x 32 x 50.3			PRO	92178303	ø 330 x 28 x 64.9	
										91062300	ø 178 x 25	

T - Z

kW / hp

S60 I Saloon 07/00→04/10 → S60 I, Page 1287

S60 I Stufenheck 07/00→04/10 → S60 I, Page 1287

S60 II 04/10→

		791000	Ate		2412301	[–] 24123 20.3	16" -brake	TRW		2449601	[–] 24496 16.9	vented disc
2.0 T	04/10→	149 / 203										
D3	04/10→04/12	120 / 163	Ate		2414201	[–] 24142 19.8	16,5" -brake	TRW		2449602	[–] 24496 16.9	solid disc
D3	05/12→	100 / 136										
D4	05/12→	120 / 163										
D5	04/10→	151 / 205	Ate		82039300		16" -brake	Luc		82054900		
D5	06/11→	158 / 215										
D5 AWD	04/10→	151 / 205	Ate		82062900					92162900	ø 302 x 11 x 40.7	
D5 AWD	06/11→	158 / 215										
DRIVe / D2	01/11→	84 / 114										
T3	04/10→	110 / 150	Ate		82515500		16,5" -brake		PRO	92162903	ø 302 x 11 x 40.7	
T4	04/10→	132 / 180										
T4F	04/11→	132 / 180			92159200	ø 300 x 28 x 52	16" -brake			92168300	ø 302 x 22 x 40.8	
T5	04/10→	177 / 240										
T6 AWD	04/10→	224 / 304			92162300	ø 316 x 28 x 52	16,5" -brake		PRO	92168303	ø 302 x 22 x 40.8	
				PRO	92159203	ø 300 x 28 x 52	16" -brake			TPM0011		
				PRO	92162303	ø 316 x 28 x 52	16,5" -brake					
					TPM0011		⊕ rim size 16.5"					
		791100	Ate		2412301	[–] 24123 20.3	16" -brake	TRW		2449601	[–] 24496 16.9	vented disc
2.5 T5	09/11→	186 / 253										
T6 AWD	04/14→	242 / 329	Ate		2414201	[–] 24142 19.8	16,5" -brake	TRW		2449602	[–] 24496 16.9	solid disc
			Ate		82039300		16" -brake			92162900	ø 302 x 11 x 40.7	
			Ate		82062900				PRO	92162903	ø 302 x 11 x 40.7	
			Ate		82515500		16,5" -brake			92168300	ø 302 x 22 x 40.8	
					92159200	ø 300 x 28 x 52	16" -brake		PRO	92168303	ø 302 x 22 x 40.8	
					92162300	ø 316 x 28 x 52	16,5" -brake					
				PRO	92159203	ø 300 x 28 x 52	16" -brake					
				PRO	92162303	ø 316 x 28 x 52	16,5" -brake					
					TPM0011							
		791200	Ate		2412301	[–] 24123 20.3	16'' -brake	TRW		2449601	[–] 24496 16.9	vented disc
2.5 T5 AWD	09/11→	186 / 253										
D5	04/14→	169 / 230	Ate		2414201	[–] 24142 19.8	16,5''/17,5'' -brake	TRW		2449602	[–] 24496 16.9	solid disc
T5	07/14→	225 / 306										
T5 AWD	07/14→	180 / 245	Ate		82039300		16'' -brake			92162900	ø 302 x 11 x 40.7	
			Ate		82062900				PRO	92162903	ø 302 x 11 x 40.7	
			Ate		82515500		16,5''/17,5'' -brake			92168300	ø 302 x 22 x 40.8	
					92159200	ø 300 x 28 x 52	16'' -brake		PRO	92168303	ø 302 x 22 x 40.8	
					92162300	ø 316 x 28 x 52	16,5'' -brake					
					92168200	ø 336 x 28 x 52	17,5'' -brake					
				PRO	92159203	ø 300 x 28 x 52	16'' -brake					
				PRO	92162303	ø 316 x 28 x 52	16,5'' -brake					
				PRO	92168203	ø 336 x 28 x 52	17,5'' -brake					
					TPM0011							
		791300	Ate		2412301	[–] 24123 20.3	16'' -brake	TRW		2449601	[–] 24496 16.9	vented disc
3.0 T AWD	05/14→	258 / 351										
			Ate		2414201	[–] 24142 19.8	16,5''/17,5'' -brake	TRW		2449602	[–] 24496 16.9	solid disc
			Ate		82039300		16'' -brake			92162900	ø 302 x 11 x 40.7	
			Ate		82515500		16,5''/17,5'' -brake		PRO	92162903	ø 302 x 11 x 40.7	
					92159200	ø 300 x 28 x 52	16'' -brake			92168300	ø 302 x 22 x 40.8	
					92162300	ø 316 x 28 x 52	16,5'' -brake		PRO	92168303	ø 302 x 22 x 40.8	
					92168200	ø 336 x 28 x 52	17,5'' -brake					

T - Z

		kW / hp									
S60 II 04/10→											
		791300		PRO	**92159203**	ø 300 x 28 x 52	16'' -brake				
3.0 T AWD	05/14→	258 / 351		PRO	**92162303**	ø 316 x 28 x 52	16,5'' -brake				
				PRO	**92168203**	ø 336 x 28 x 52	17,5'' -brake				
					TPM0011						
		791400	Ate		**2412301**	[–] 24123 20.3	16'' -brake	TRW		**2449601**	[–] 24496 16.9 vented disc
D4	09/13→	133 / 181									
T5	09/13→	180 / 245									
T6	09/13→	225 / 306	Ate		**2414201**	[–] 24142 19.8	16,5'' -brake	TRW		**2449602**	[–] 24496 16.9 solid disc
			Ate		**82039300**		16'' -brake	Luc		**82054900**	
			Ate		**82062900**					**92162900**	ø 302 x 11 x 40.7
			Ate		**82515500**		16,5'' -brake		PRO	**92162903**	ø 302 x 11 x 40.7
					92159200	ø 300 x 28 x 52	16'' -brake			**92168300**	ø 302 x 22 x 40.8
					92162300	ø 316 x 28 x 52	16,5'' -brake		PRO	**92168303**	ø 302 x 22 x 40.8
				PRO	**92159203**	ø 300 x 28 x 52	16'' -brake			**TPM0011**	
				PRO	**92162303**	ø 316 x 28 x 52	16,5'' -brake				
					TPM0011						
		791500	Ate		**2412301**	[–] 24123 20.3	16'' -brake	TRW		**2449601**	[–] 24496 16.9 vented disc
D5 AWD	04/14→	169 / 230									
			Ate		**2414201**	[–] 24142 19.8	16,5''/17,5'' -brake	TRW		**2449602**	[–] 24496 16.9 solid disc
			Ate		**82039300**		16'' -brake			**92162900**	ø 302 x 11 x 40.7
			Ate		**82515500**		16,5''/17,5'' -brake		PRO	**92162903**	ø 302 x 11 x 40.7
					92159200	ø 300 x 28 x 52	16'' -brake			**92168300**	ø 302 x 22 x 40.8
					92162300	ø 316 x 28 x 52	16,5'' -brake		PRO	**92168303**	ø 302 x 22 x 40.8
					92168200	ø 336 x 28 x 52	17,5'' -brake				
				PRO	**92159203**	ø 300 x 28 x 52	16'' -brake				
				PRO	**92162303**	ø 316 x 28 x 52	16,5'' -brake				
				PRO	**92168203**	ø 336 x 28 x 52	17,5'' -brake				
					TPM0011						
S70 (LS) 11/96→11/00											
		791600	Ate		**2149201**	[–] 21492 19.5	16'' -brake	Ate		**2075506**	[–] 20755 15
2.0	01/97→11/00	93 / 126									
2.0	01/97→11/00	105 / 143	Ate		**2310601**	[–] 23106 18.9	17'' -brake	Ate		**82026300**	
2.0	01/97→11/00	120 / 163									
2.0	01/97→11/00	132 / 180									
2.0 Turbo	01/97→11/00	155 / 210	Ate		**2127304**	[o] 21273 19.5	15'' -brake		PRO	**92066803**	ø 295 x 9.6 x 72
2.0 Turbo	01/97→11/00	166 / 226									
2.3	11/96→11/00	177 / 241									
2.3	04/99→09/00	195 / 265	Ate		**82030900**		17'' -brake			**91046000**	ø 177.8 x 25
2.3 T-5	01/97→11/00	176 / 239									
2.3 Turbo	01/97→11/00	184 / 250	Ate		**82032000**		15'' / 16'' -brake			**97008700**	
2.4	01/97→11/00	125 / 170									
2.4	08/99→11/00	103 / 140									
2.4 Blu-Fuel	07/97→09/00	103 / 140	Ate		**82062900**						
2.4 Turbo	01/97→11/00	142 / 193									
2.5	01/97→11/00	106 / 144			**92092300**	ø 302 x 26 x 50.5	16'' -brake				
2.5	06/98→11/00	121 / 165									
2.5 Bifuel	10/98→11/00	106 / 144									
2.5 Bifuel	07/99→11/00	103 / 140		PRO	**92066703**	ø 280 x 26 x 50.3	15'' -brake				
2.5 TDI	01/97→11/00	103 / 140									
		791700	Ate		**2149201**	[–] 21492 19.5	16'' -brake	Gir		**2138501**	[–] 21385 13.9
2.3 T5 AWD	07/97→09/00	184 / 250									
2.4 AWD	11/96→05/99	106 / 144	Ate		**2310601**	[–] 23106 18.9	17'' -brake	Ate		**82026300**	
2.4 AWD	10/98→05/99	121 / 165									
2.4 AWD	04/99→09/00	103 / 140									
2.4 AWD	04/99→09/00	125 / 170	Ate		**2127304**	[o] 21273 19.5	15'' -brake			**92088600**	ø 283 x 10 x 62
2.4 T5 AWD	11/96→04/99	142 / 193									
2.5 TDi AWD	10/99→09/00	103 / 140	Ate		**82030900**		17'' -brake			**91046000**	ø 177.8 x 25
			Ate		**82032000**		15'' / 16'' -brake			**97008700**	
			Ate		**82062900**						

		kW / hp											
S70 (LS) 11/96→11/00													
		791700											
2.3 T5 AWD	07/97→09/00	184 / 250		92092300	ø 302 x 26 x 50.5	16" -brake							
2.4 AWD	11/96→05/99	106 / 144	PRO	92066703	ø 280 x 26 x 50.3	15" -brake							
2.4 AWD	10/98→05/99	121 / 165											
2.4 AWD	04/99→09/00	103 / 140											
2.4 AWD	04/99→09/00	125 / 170											
2.4 T5 AWD	11/96→04/99	142 / 193											
2.5 TDi AWD	10/99→09/00	103 / 140											
S70 Saloon (LS) 11/96→11/00 → S70 (LS), Page 1289													
S70 Stufenheck (LS) 11/96→11/00 → S70 (LS), Page 1289													
S80 I (TS, XY) 05/98→07/06													
		791800	Ate	2307303	[–] 23073 18.9	15" -brake 16" -brake	Ate	2307602	[–] 23076 17.5				
2.0	06/98→07/06	120 / 163											
2.0 T	06/98→07/06	166 / 226	Ate	2307381	[–] 23073 18.9	15" -brake 16" -brake	Ate	2307681	[–] 23076 17.5				
2.0 T	12/99→07/06	132 / 180	epad				epad						
2.3 R	04/00→08/05	195 / 265	Ate	2307401	[–] 23074 18.9	17" -brake	Ate	82029300					
2.4	01/99→07/06	103 / 140											
2.4	01/99→07/06	125 / 170	Ate	82032000			Ate	82062900					
2.4 Bifuel (CNG)	09/01→07/06	103 / 140											
2.4 Bifuel (LPG)	09/01→07/06	103 / 140	Ate	82062900			PRO	92100703	ø 288 x 12 x 65				
2.4 D	10/01→07/06	96 / 131											
2.4 D5	08/01→07/06	120 / 163	PRO	92100503	ø 285.5 x 26 x 50.3	15" -brake		91062300	ø 178 x 25				
2.4 LTP	06/04→07/06	132 / 179											
2.4 T	06/00→07/06	147 / 200	PRO	92100603	ø 305 x 28 x 50.3	16" -brake		97034800					
2.4 T5 AWD	04/00→09/03	147 / 200											
2.5 T	03/03→07/06	154 / 210	PRO	92178203	ø 320 x 28 x 50.2	17" -brake							
2.5 T AWD	07/03→07/06	154 / 210											
2.5 TDI	01/99→07/06	103 / 140											
2.8 T6	05/98→07/06	200 / 272											
2.9	05/98→07/06	150 / 204											
2.9	03/99→07/06	147 / 200											
3.0	06/01→07/06	144 / 196											
3.0 T6	06/01→07/06	200 / 272											
		791900	Ate	2307303	[–] 23073 18.9	15'' 16'' -brake	Ate	2307602	[–] 23076 17.5				
2.8 T6	09/98→12/01	200 / 272											
2.9	09/98→12/05	147 / 200	Ate	2307381	[–] 23073 18.9	15'' 16'' -brake	Ate	2307681	[–] 23076 17.5				
			epad				epad						
			Ate	2307401	[–] 23074 18.9	17'' -brake	PRO	92100703	ø 288 x 12 x 65				
			PRO	92100503	ø 285.5 x 26 x 50.3	15'' -brake		91062300	ø 178 x 25				
			PRO	92100603	ø 305 x 28 x 50.3	16'' -brake							
			PRO	92178203	ø 320 x 28 x 50.2	17'' -brake							
S80 I Saloon (TS, XY) 05/98→07/06 → S80 I (TS, XY), Page 1290													
S80 I Stufenheck (TS, XY) 05/98→07/06 → S80 I (TS, XY), Page 1290													
S80 II (AS) 03/06→12/11													
		792000	Ate	2412301	[–] 24123 20.3	16" -brake	TRW	2449601	[–] 24496 16.9	⊕ elect. handbr. vented disc			
1.6 D DRIVe	01/10→	80 / 109											
1.6 DRIVe	06/11→	84 / 114	Ate	2414201	[–] 24142 19.8	16,5"/17,5" -brake	TRW	2449602	[–] 24496 16.9	⊕ elect. handbr. solid disc			
2.0	01/08→	107 / 146											
2.0 FlexFuel	01/08→	107 / 146	Ate	82039300		16" -brake -brake	TRW	2453702	[–] 24537 15.7	⊖ elect. handbr.			
2.0 T	01/10→	149 / 203											
2.0 TDi	02/08→	100 / 136	Ate	82062900			Luc	82054900		⊕ elect. handbr. vented disc			
2.4 D	03/06→	120 / 163											
2.4 D	01/10→	129 / 175	Ate	82515500		16,5"/17,5" -brake	Luc	82073800		⊕ elect. handbr. solid disc			
2.5 T	03/06→	147 / 200											
2.5 T	01/10→	170 / 231		92159200	ø 300 x 28 x 52	16" -brake	Luc	82074100		⊖ elect. handbr.			
2.5 T AWD	10/06→	147 / 200											
2.5 T FlexFuel	05/08→	147 / 200		92162300	ø 316 x 28 x 52	16,5" -brake		92162900	ø 302 x 11 x 40.7	⊕ elect. handbr.			
2.5 T FlexFuel	01/10→	170 / 231											
3.2	03/06→	175 / 238		92168200	ø 336 x 28 x 52	17,5" -brake		92168400	ø 302 x 12 x 69.3	⊖ elect. handbr.			
3.2	01/10→	179 / 243											
3.2 AWD	01/07→	175 / 238	PRO	92159203	ø 300 x 28 x 52	16" -brake	PRO	92162903	ø 302 x 11 x 40.7	⊕ elect. handbr.			
3.2 AWD	01/10→	179 / 243											
4.4 V8 AWD	03/06→	232 / 316	PRO	92162303	ø 316 x 28 x 52	16,5" -brake	PRO	92168403	ø 302 x 12 x 69.3	⊖ elect. handbr.			
D3	05/12→	100 / 136											
D3 / D4	01/10→	120 / 163	PRO	92168203	ø 336 x 28 x 52	17,5" -brake		92168300	ø 302 x 22 x 40.8	⊕ elect. handbr.			
D5	03/06→	136 / 185											
D5	01/10→	151 / 205					PRO	92168303	ø 302 x 22 x 40.8	⊕ elect. handbr.			
D5	06/11→	158 / 215											
D5 AWD	01/07→	136 / 185						TPM0011					
D5 AWD	01/10→	151 / 205											
D5 AWD	06/11→	158 / 215											
T4	10/10→	132 / 180											
T4F	05/11→	132 / 180											
T5	10/10→	177 / 241											
T6 AWD	01/07→	210 / 286											
T6 AWD	10/10→	224 / 305											
		792100	Ate	2412301	[–] 24123 20.3	16" -brake	TRW	2449601	[–] 24496 16.9	⊕ elect. handbr. vented disc			
3.2	09/09→12/10	175 / 238											
3.2	09/10→12/11	171 / 233	Ate	2414201	[–] 24142 19.8	16.5'' 17.5'' -brake	TRW	2449602	[–] 24496 16.9	⊕ elect. handbr. solid disc			
			Ate	82039300		16" -brake	TRW	2453702	[–] 24537 15.7	⊖ elect. handbr.			
			Ate	82515500		16.5'' 17.5'' -brake		92162900	ø 302 x 11 x 40.7	⊕ elect. handbr.			
				92159200	ø 300 x 28 x 52	16" -brake		92168400	ø 302 x 12 x 69.3	⊖ elect. handbr.			

T - Z

kW / hp

S80 II (AS) 03/06→12/11

		792100											
3.2	09/09→12/10	175 / 238			92162300	ø 316 x 28 x 52	16.5'' -brake			92162903	ø 302 x 11 x 40.7	⊕ elect. handbr.
3.2	09/10→12/11	171 / 233			92168200	ø 336 x 28 x 52	17.5'' -brake			92168403	ø 302 x 12 x 69.3	⊖ elect. handbr.
				PRO	92159203	ø 300 x 28 x 52	16'' -brake			92168300	ø 302 x 22 x 40.8	⊕ elect. handbr.
				PRO	92162303	ø 316 x 28 x 52	16.5'' -brake		PRO	92168303	ø 302 x 22 x 40.8	⊕ elect. handbr.
				PRO	92168203	ø 336 x 28 x 52	17.5'' -brake			TPM0011		
					TPM0011							
		792200	Ate		2412301	[–] 24123 20.3	16" -brake	TRW		2449601	[–] 24496 16.9	
D4	09/13→	133 / 181	Ate		2414201	[–] 24142 19.8	16,5"/17,5" -brake			92162900	ø 302 x 11 x 40.7	16" -brake
T5	09/13→	180 / 245	Ate		82039300		16" -brake		PRO	92162903	ø 302 x 11 x 40.7	16" -brake
			Ate		82062900					92168300	ø 302 x 22 x 40.8	16,5"/17,5" -brake
			Ate		82515500		16,5"/17,5" -brake		PRO	92168303	ø 302 x 22 x 40.8	16,5"/17,5" -brake
					92159200	ø 300 x 28 x 52	16" -brake			TPM0011		
					92162300	ø 316 x 28 x 52	16,5" -brake					
					92168200	ø 336 x 28 x 52	17,5" -brake					
				PRO	92159203	ø 300 x 28 x 52	16" -brake					
				PRO	92162303	ø 316 x 28 x 52	16,5" -brake					
				PRO	92168203	ø 336 x 28 x 52	17,5" -brake					
					TPM0011							

S80 II Saloon (AS) 03/06→12/11 → S80 II (AS), Page 1290

S80 II Stufenheck (AS) 03/06→12/11 → S80 II (AS), Page 1290

V40 Cross Country 01/13→

		792300	Ate		2372301	[–] 23723 18.2		Ate		2521201	[–] 25212 16.1	
D2	01/13→	84 / 114										
T3	01/13→	110 / 150	Ate		2372381	[–] 23723 18.2		Ate		2521281	[–] 25212 16.1	
T4	01/13→	132 / 180		epad					epad			
T5	01/13→	187 / 254	Ate		82032000			Ate		82503500		
				PRO	92255503	ø 278 x 25 x 48.5	15" -brake		PRO	92255603	ø 280 x 11 x 40.9	
				PRO	92255703	ø 300 x 25 x 48.5	→22948 16" -brake			TPM0011		
		792400	Ate		2391201	[–] 23912 18.5		Ate		2521201	[–] 25212 16.1	
D3	01/13→	110 / 150										
D4	01/13→	130 / 177	Ate		82071800			Ate		2521281	[–] 25212 16.1	
									epad			
								Ate		82503500		
									PRO	92255603	ø 280 x 11 x 40.9	
										TPM0011		

V40 Estate (VW) 07/95→06/04

		792500	Luc		2192001	[+] 21920 15.1	→06/97	Luc		2354901	[+] 23549 16.8	
1.6	12/95→08/99	77 / 105										
1.8	07/95→08/99	85 / 115	Luc		2198302	[+] 21983 17.3	07/97→	Luc		82058900		
1.9 T4	05/97→07/00	147 / 200										
1.9 TD	07/95→08/99	66 / 90	Luc		82058900			Luc		82063300		
2.0	07/95→08/99	103 / 140										
2.0	07/95→06/04	100 / 136	Luc		82063500				PRO	92083003	ø 260 x 10 x 41	
					92082900	ø 256 x 24 x 45.5	→06/97					
					92103900	ø 256 x 24 x 45	→06/97					
				PRO	92100403	ø 281 x 24 x 45.5	07/97→					
		792600	Luc		2198302	[+] 21983 17.3		Luc		2354901	[+] 23549 16.8	
1.6	03/99→06/04	80 / 109										
1.8	03/99→06/04	90 / 122	Luc		82058900			Luc		82058900		
1.8 Bi-Fuel	11/99→08/03	88 / 120										
1.8 Blu-Fuel	06/01→08/03	85 / 116										
1.8 i	03/98→06/04	92 / 125										

T - Z

		kW / hp										
V40 Estate (VW) 07/95→06/04												
1.8 i	06/01→06/04	90 / 122	Luc		82063500			Luc		82063300		
1.9	09/03→06/04	127 / 173		PRO	92100403	ø 281 x 24 x 45.5			PRO	92083003	ø 260 x 10 x 41	
1.9 DI	03/99→07/00	70 / 95										
1.9 DI	07/00→06/04	75 / 102										
1.9 DI	07/00→06/04	85 / 115										
2.0	09/99→12/00	119 / 162										
2.0 D	12/02→06/04	100 / 136										
2.0 T	10/97→07/00	118 / 160										
2.0 T	07/99→06/04	121 / 165										
2.0 T	06/01→06/04	120 / 163										
2.0 T4	07/00→06/04	147 / 200										
V40 Hatchback 03/12→												
		792700	Ate		2372301	[–] 23723 18.2		Ate		2521201	[–] 25212 16.1	
D2	03/12→	84 / 114	Ate	epad	2372381	[–] 23723 18.2		Ate	epad	2521281	[–] 25212 16.1	
T3 GTDi	03/12→	110 / 150	Ate		82032000			Ate		82503500		
				PRO	92255503	ø 278 x 25 x 48.5	15" -brake		PRO	92255603	ø 280 x 11 x 40.9	
				PRO	92255703	ø 300 x 25 x 48.5	→22948 16" -brake			TPM0011		
		792800	Ate		2391201	[–] 23912 18.5		Ate		2521201	[–] 25212 16.1	
D3	03/12→	110 / 150	Ate		82071800			Ate	epad	2521281	[–] 25212 16.1	
D4	03/12→	130 / 177						Ate		82503500		
									PRO	92255603	ø 280 x 11 x 40.9	
										TPM0011		
		792900	Ate		2372301	[–] 23723 18.2		Ate		2521201	[–] 25212 16.1	
D4	05/14→	140 / 190	Ate	epad	2372381	[–] 23723 18.2		Ate	epad	2521281	[–] 25212 16.1	
T5	05/14→	180 / 245	Ate		82032000		15'' 16'' -brake	Ate		82503500		
			Ate		82071800		16,5'' -brake		PRO	92255603	ø 280 x 11 x 40.9	
				PRO	92255503	ø 278 x 25 x 48.5	15'' -brake			TPM0011		
				PRO	92255703	ø 300 x 25 x 48.5	16'' -brake →22948					
					TPM0011		22949→					
		793000	Ate		2372301	[–] 23723 18.2	16" -brake	Ate		2521201	[–] 25212 16.1	
T2 GTDi	03/13→	88 / 120	Ate	epad	2372381	[–] 23723 18.2	16" -brake	Ate	epad	2521281	[–] 25212 16.1	
			Ate		2391201	[–] 23912 18.5	16,5" -brake	Ate		82503500		
			Ate		82032000		16" -brake		PRO	92255603	ø 280 x 11 x 40.9	
			Ate		82071800		16,5" -brake			TPM0011		
				PRO	92255703	ø 300 x 25 x 48.5	→22948 16" -brake					
					TPM0011							
		793100	Ate		2391201	[–] 23912 18.5		Ate		2521201	[–] 25212 16.1	
T4	07/13→	132 / 180	Ate		82071800			Ate	epad	2521281	[–] 25212 16.1	
T4 AWD	07/13→	132 / 180			TPM0011			Ate		82503500		
T5	03/13→	157 / 214							PRO	92255603	ø 280 x 11 x 40.9	
T5 AWD	01/13→	187 / 254								TPM0011		
T5 AWD	03/13→	157 / 214										
		793200	Ate		2372301	[–] 23723 18.2	15''/16'' -brake	Ate		2521201	[–] 25212 16.1	
T4	04/14→	147 / 200	Ate	epad	2372381	[–] 23723 18.2	15''/16'' -brake	Ate	epad	2521281	[–] 25212 16.1	
			Ate		2391201	[–] 23912 18.5	16,5'' -brake	Ate		82503500		
			Ate		82032000		15''/16'' -brake		PRO	92255603	ø 280 x 11 x 40.9	
			Ate		82071800		16,5'' -brake			TPM0011		
				PRO	92255503	ø 278 x 25 x 48.5	15'' -brake					

T - Z

		kW / hp									
V40 Hatchback 03/12→											
		793200		PRO 92255703	ø 300 x 25 x 48.5	16'' -brake →22948					
T4	04/14→	147 / 200		TPM0011							
		793300	Ate	2372301	[–] 23723 18.2		Ate	2521201	[–] 25212 16.1		
T4 GTDi	03/12→	132 / 180	Ate epad	2372381	[–] 23723 18.2		Ate epad	2521281	[–] 25212 16.1		
			Ate	82032000			Ate	82503500			
			PRO	92255703	ø 300 x 25 x 48.5	→22948	PRO	92255603	ø 280 x 11 x 40.9		
								TPM0011			
		793400	Ate	2372301	[–] 23723 18.2		Ate	2521201	[–] 25212 16.1		
T5	12/12→	187 / 254	Ate epad	2372381	[–] 23723 18.2		Ate epad	2521281	[–] 25212 16.1		
			Ate	82032000			Ate	82503500			
			PRO	92255503	ø 278 x 25 x 48.5	→12W45	PRO	92255603	ø 280 x 11 x 40.9		
								TPM0011			
		793500	Ate	2372301	[–] 23723 18.2	15'' 16'' -brake	Ate	2521201	[–] 25212 16.1	Aluminium	
T5 AWD	03/14→	154 / 210	Ate epad	2372381	[–] 23723 18.2	15'' 16'' -brake	Ate epad	2521281	[–] 25212 16.1	Aluminium	
			Ate	2391201	[–] 23912 18.5	16,5'' -brake	Ate	82503500			
			Ate	82032000		15'' 16'' -brake	PRO	92255603	ø 280 x 11 x 40.9	Aluminium	
			Ate	82071800		16,5'' -brake		TPM0011			
			PRO	92255503	ø 278 x 25 x 48.5	15'' -brake					
			PRO	92255703	ø 300 x 25 x 48.5	16'' -brake →22948					
				TPM0011							
V40 Kombi (VW) 07/95→06/04 → V40 Estate (VW), Page 1291											
V40 Schrägheck 03/12→ → V40 Hatchback, Page 1292											
V50 (MW) 04/04→											
		793600	Ate	2372301	[–] 23723 18.2	15'' -brake 16'' -brake	Ate	2521201	[–] 25212 16.1		
1.6	01/05→	74 / 101									
1.6 D	01/05→	81 / 110									
1.6 D2	01/10→	84 / 114	Ate epad	2372381	[–] 23723 18.2	15'' -brake 16'' -brake	Ate epad	2521281	[–] 25212 16.1		
1.8	04/04→	92 / 125									
1.8 FlexFuel	01/05→	92 / 125	Ate	2391201	[–] 23912 18.5	17'' -brake	Ate	82062900			
2.0	10/06→	107 / 146									
2.0 D	04/04→	100 / 136									
2.0 FlexFuel	01/10→	107 / 146	Ate	82032000			Ate	82503500			
2.4	04/04→	103 / 140									
2.4	04/04→	125 / 170	Ate	82062900			PRO	92133803	ø 280 x 10.9 x 40.8		
2.4 AWD	08/06→	125 / 170									
2.4 D5	03/06→	132 / 179									
2.4 Tdi	05/07→	120 / 163		92149100	ø 320 x 25 x 48.5	17'' -brake					
D3	10/10→	110 / 150									
D4	10/10→	130 / 177	PRO	92141203	ø 278 x 25 x 48.5	15'' -brake					
T5	04/04→	162 / 220									
T5	03/07→	169 / 230	PRO	92141303	ø 300 x 25 x 48.5	16'' -brake					
T5 AWD	04/04→	162 / 220									
T5 AWD	03/07→	169 / 230	PRO	92149103	ø 320 x 25 x 48.5	17'' -brake					
V50 Estate (MW) 04/04→ → V50 (MW), Page 1293											
V50 Kombi (MW) 04/04→ → V50 (MW), Page 1293											
V60 09/10→											
		793700	Ate	2412301	[–] 24123 20.3	16'' -brake	TRW	2449601	[–] 24496 16.9	vented disc	
1.6 DRIVe	06/11→	84 / 114									
2.0 T	09/10→	149 / 203	Ate	2414201	[–] 24142 19.8	16,5'' -brake	TRW	2449602	[–] 24496 16.9	solid disc	
2.4 D5	06/11→	158 / 215									
2.4 D5 AWD	06/11→	158 / 215									
2.4 Hybrid AWD	06/12→	158 / 215	Ate	82039300		16'' -brake	Luc	82054900		vented disc	
D3	12/12→	100 / 136									
D3 / D4	09/10→	120 / 163	Ate	82062900			Luc	82073800		solid disc	
D4 AWD	12/12→	120 / 163									
D5	09/10→	151 / 205									
T3	09/10→	110 / 150	Ate	82515500		16,5'' -brake		92162900	ø 302 x 11 x 40.7		
T4	09/10→	132 / 180									
T4F	04/11→	132 / 180		92159200	ø 300 x 28 x 52	16'' -brake	PRO	92162903	ø 302 x 11 x 40.7		
T5	09/10→	177 / 241									
T6 AWD	09/10→	224 / 305		92162300	ø 316 x 28 x 52	16,5'' -brake		92168300	ø 302 x 22 x 40.8		

		kW / hp									
V60 09/10→											
		793700		92159203	ø 300 x 28 x 52	16" -brake		92168303	ø 302 x 22 x 40.8	
1.6 DRIVe	06/11→	84 / 114		92162303	ø 316 x 28 x 52	16,5" -brake		TPM0011		
2.0 T	09/10→	149 / 203		TPM0011						
2.4 D5	06/11→	158 / 215								
2.4 D5 AWD	06/11→	158 / 215								
2.4 Hybrid AWD	06/12→	158 / 215								
D3	12/12→	100 / 136								
D3 / D4	09/10→	120 / 163								
D4 AWD	12/12→	120 / 163								
D5	09/10→	151 / 205								
T3	09/10→	110 / 150								
T4	09/10→	132 / 180								
T4F	04/11→	132 / 180								
T5	09/10→	177 / 241								
T6 AWD	09/10→	224 / 305								
		793800	Ate	2412301	[–] 24123 20.3	16" -brake	TRW	2449601	[–] 24496 16.9	vented disc
3.0 T AWD	05/14→	258 / 351	Ate	2414201	[–] 24142 19.8	16,5" 17,5" -brake	TRW	2449602	[–] 24496 16.9	solid disc
			Ate	82039300		16" -brake	Luc	82054900		vented disc
			Ate	82062900			Luc	82073800		solid disc
			Ate	82515500		16,5" 17,5" -brake		92162900	ø 302 x 11 x 40.7	
				92159200	ø 300 x 28 x 52	16" -brake		92162903	ø 302 x 11 x 40.7	
				92162300	ø 316 x 28 x 52	16,5" -brake		92168300	ø 302 x 22 x 40.8	
				92168200	ø 336 x 28 x 52	17,5" -brake		92168303	ø 302 x 22 x 40.8	
				92159203	ø 300 x 28 x 52	16" -brake		TPM0011		
				92162303	ø 316 x 28 x 52	16,5" -brake				
				92168203	ø 336 x 28 x 52	17,5" -brake				
				TPM0011						
		793900	Ate	2412301	[–] 24123 20.3	16" -brake	TRW	2449601	[–] 24496 16.9	vented disc
D4	10/13→	133 / 181	Ate	2414201	[–] 24142 19.8	16,5" -brake	TRW	2449602	[–] 24496 16.9	solid disc
D4 AWD	10/13→	133 / 181								
T5	10/13→	180 / 245								
T5	04/14→	157 / 214								
T6	10/13→	225 / 306	Ate	82039300		16" -brake	Luc	82054900		vented disc
			Ate	82062900			Luc	82073800		solid disc
			Ate	82515500		16,5" -brake		92162900	ø 302 x 11 x 40.7	
				92159200	ø 300 x 28 x 52	16" -brake		92162903	ø 302 x 11 x 40.7	
				92162300	ø 316 x 28 x 52	16,5" -brake		92168300	ø 302 x 22 x 40.8	
				92159203	ø 300 x 28 x 52	16" -brake		92168303	ø 302 x 22 x 40.8	
				92162303	ø 316 x 28 x 52	16,5" -brake		TPM0011		
				TPM0011						
		794000	Ate	2412301	[–] 24123 20.3	16" -brake	TRW	2449601	[–] 24496 16.9	vented disc
D5	04/14→	169 / 230	Ate	2414201	[–] 24142 19.8	16,5"/17,5" -brake	TRW	2449602	[–] 24496 16.9	solid disc
D5 AWD	04/14→	169 / 230								
T5 AWD	07/14→	179 / 243								
T6	07/14→	224 / 305								
T6 AWD	04/14→	242 / 329	Ate	82039300		16" -brake	Luc	82054900		vented disc
			Ate	82062900			Luc	82073800		solid disc
			Ate	82515500		16,5"/17,5" -brake		92162900	ø 302 x 11 x 40.7	
				92159200	ø 300 x 28 x 52	16" -brake		92162903	ø 302 x 11 x 40.7	
				92162300	ø 316 x 28 x 52	16,5" -brake		92168300	ø 302 x 22 x 40.8	
				92168200	ø 336 x 28 x 52	17,5" -brake		92168303	ø 302 x 22 x 40.8	
				92159203	ø 300 x 28 x 52	16" -brake		TPM0011		
				92162303	ø 316 x 28 x 52	16,5" -brake				
				92168203	ø 336 x 28 x 52	17,5" -brake				
				TPM0011						

T - Z

kW / hp

V60 09/10→

		794100	Ate		2412301	[–] 24123 20.3	16" -brake	TRW		2449601	[–] 24496 16.9	vented disc
D5 AWD	09/10→	151 / 205	Ate		2414201	[–] 24142 19.8	16,5" -brake	TRW		2449602	[–] 24496 16.9	solid disc
			Ate		82039300		16" -brake	Luc		82054900		vented disc
			Ate		82062900			Luc		82073800		solid disc
			Ate		82515500		16,5" -brake			92162900	ø 302 x 11 x 40.7	
					92159200	ø 300 x 28 x 52	16" -brake		PRO	92162903	ø 302 x 11 x 40.7	
					92162300	ø 316 x 28 x 52	16,5" -brake			92168300	ø 302 x 22 x 40.8	
				PRO	92159203	ø 300 x 28 x 52	16" -brake		PRO	92168303	ø 302 x 22 x 40.8	
				PRO	92162303	ø 316 x 28 x 52	16,5" -brake			TPM0011		
					TPM0011		16,5" -brake					
		794200	Ate		2412301	[–] 24123 20.3	16'' -brake	TRW		2449601	[–] 24496 16.9	vented disc
T5	08/12→	176 / 240	Ate		2414201	[–] 24142 19.8	16,5''/17'' -brake	TRW		2449602	[–] 24496 16.9	solid disc
			Ate		82039300		16'' -brake	Luc		82054900		vented disc
			Ate		82062900			Luc		82073800		solid disc
			Ate		82515500		16,5''/17'' -brake			92162900	ø 302 x 11 x 40.7	
					92159200	ø 300 x 28 x 52	16'' -brake		PRO	92162903	ø 302 x 11 x 40.7	
					92162300	ø 316 x 28 x 52	16,5'' -brake			92168300	ø 302 x 22 x 40.8	
					92168200	ø 336 x 28 x 52	17'' -brake		PRO	92168303	ø 302 x 22 x 40.8	
				PRO	92159203	ø 300 x 28 x 52	16'' -brake			TPM0011		
				PRO	92162303	ø 316 x 28 x 52	16,5'' -brake					
				PRO	92168203	ø 336 x 28 x 52	17'' -brake					
					TPM0011							

V70 (LV) 11/96→11/00 → V70 I (LV), Page 1295

V70 (LV) 11/96→11/00 → V70 I (LV), Page 1295

V70 I (LV) 11/96→11/00

		794300	Ate		2149201	[–] 21492 19.5	16" -brake	Ate		2075506	[–] 20755 15	
2.0	01/97→03/00	93 / 126										
2.0	01/97→03/00	105 / 143	Ate		2310601	[–] 23106 18.9	17" -brake	Ate		82026300		
2.0	01/97→03/00	120 / 163										
2.0	01/97→03/00	132 / 180										
2.0 Turbo	01/97→03/00	155 / 211	Ate		2127304	[o] 21273 19.5	15" -brake		PRO	92066803	ø 295 x 9.6 x 72	
2.0 Turbo	01/97→03/00	166 / 226										
2.3	11/96→11/00	177 / 241	Ate		82030900		17" -brake			91046000	ø 177.8 x 25	
2.3 T-5	01/97→03/00	176 / 239										
2.3 Turbo	01/97→03/00	184 / 250	Ate		82032000		15" / 16" -brake			97008700		
2.4	01/97→05/00	125 / 170										
2.4	08/99→05/00	103 / 140										
2.4 Bifuel	08/99→03/00	103 / 140	Ate		82062900							
2.4 Turbo	01/97→03/00	142 / 193										
2.5	01/97→03/00	106 / 144										
2.5	06/98→03/00	121 / 165			92092300	ø 302 x 26 x 50.5	16" -brake					
2.5 Bifuel	10/98→08/99	106 / 144										
2.5 TDI	01/97→05/00	103 / 140		PRO	92066703	ø 280 x 26 x 50.3	15" -brake					
		794400	Ate		2149201	[–] 21492 19.5	16" -brake	Gir		2138501	[–] 21385 13.9	
2.0 Turbo AWD	01/97→03/00	166 / 226										
2.3 AWD	12/98→02/00	195 / 265	Ate		2310601	[–] 23106 18.9	17" -brake	Ate		82026300		
2.3 T-5 AWD	01/97→03/00	176 / 239										
2.3 T AWD	04/97→03/00	184 / 250	Ate		2127304	[o] 21273 19.5	15" -brake			92088600	ø 283 x 10 x 62	→587425
2.4 AWD	10/98→05/99	121 / 165										
2.4 Turbo AWD	05/99→02/00	195 / 265										
2.5 AWD	03/99→03/00	195 / 265	Ate		82030900		17" -brake		PRO	92149203	ø 288 x 12 x 62	587426→
2.5 TDi AWD	11/96→02/00	103 / 140										
2.5 Turbo AWD	01/97→05/00	142 / 193	Ate		82032000		15" / 16" -brake			91062200	ø 177.8 x 25	
			Ate		82062900					97035700		
					92092300	ø 302 x 26 x 50.5	16" -brake					
				PRO	92066703	ø 280 x 26 x 50.3	15" -brake					

T - Z

kW / hp													
V70 II (SW) 03/00→08/07													
		794500	Ate		2307303	[–] 23073 18.9	15" -brake 16" -brake	Ate		2307602	[–] 23076 17.5	
2.0 T	07/01→08/07	132 / 180										
2.3	10/00→09/04	195 / 265	Ate		2307381	[–] 23073 18.9	15" -brake 16" -brake	Ate		2307681	[–] 23076 17.5	
2.3 AWD	10/00→09/04	195 / 265		epad					epad			
2.3 T5	03/00→08/07	184 / 250										
2.4	03/00→09/03	121 / 165	Ate		2307401	[–] 23074 18.9	17" -brake	Ate		82029300		
2.4	03/00→08/07	103 / 140										
2.4	03/00→08/07	125 / 170	Ate		2359001	[–] 23590 19	16,5" -brake	Ate		82062900		
2.4 AWD	03/00→09/03	121 / 165										
2.4 Bifuel (CNG)	09/01→08/07	103 / 140										
2.4 Bifuel (LPG)	09/01→08/07	103 / 140	Ate		82032000				PRO	92100703	ø 288 x 12 x 65	
2.4 D	12/01→08/07	96 / 131										
2.4 D	05/05→08/07	93 / 126	Ate		82062900					91062300	ø 178 x 25	
2.4 D5	08/01→08/07	120 / 163										
2.4 D5	12/05→08/07	136 / 185		PRO	92100503	ø 285.5 x 26 x 50.3	15" -brake			97034800		
2.4 D5 AWD	03/03→08/07	120 / 163										
2.4 D5 AWD	12/05→08/07	136 / 185										
2.4 T	03/00→08/07	147 / 200		PRO	92100603	ø 305 x 28 x 50.3	16" -brake					
2.4 T5	04/04→08/07	191 / 260										
2.4 T5	09/04→12/05	191 / 260										
2.4 T AWD	09/01→08/07	147 / 200		PRO	92178203	ø 320 x 28 x 50.2	17" -brake					
2.5	09/03→08/07	155 / 211										
2.5 T	04/04→08/07	154 / 209										
2.5 T AWD	09/02→08/07	154 / 209										
2.5 TDI	03/00→08/07	103 / 140										
		794600	Ate		2307303	[–] 23073 18.9	⊕ police veh. ⊕ taxi	Ate		2307602	[–] 23076 17.5	
2.5 AWD	09/02→12/04	155 / 211										
			Ate		2307381	[–] 23073 18.9	⊕ police veh. ⊕ taxi	Ate		2307681	[–] 23076 17.5	
				epad					epad			
			Ate		2307401	[–] 23074 18.9	17'' -brake ⊖ GB		PRO	92100703	ø 288 x 12 x 65	
				PRO	92100503	ø 285.5 x 26 x 50.3	15'' -brake →229472			91062300	ø 178 x 25	
				PRO	92100603	ø 305 x 28 x 50.3	16'' -brake →229472					
				PRO	92178203	ø 320 x 28 x 50.2	17'' -brake					
		794700	Bre		2309201	[+] 23092 16		Bre		2138102	[–] 21381 15	
2.5 R Sport	12/02→08/07	221 / 300										
R 2,5 T AWD	03/03→08/07	221 / 300		PRO	92178103	ø 330 x 32 x 50.3			PRO	92178303	ø 330 x 28 x 64.9	
										91062300	ø 178 x 25	
										97034900		
V70 III (BW) 08/07→													
		794800	Ate		2412301	[–] 24123 20.3	16" -brake	TRW		2449601	[–] 24496 16.9	⊕ elect. handbr. vented disc
1.6 D	01/10→	80 / 109										
1.6 DRIVe / D2	06/11→	84 / 114	Ate		2414201	[–] 24142 19.8	16,5"/17,5" -brake	TRW		2449602	[–] 24496 16.9	⊕ elect. handbr. solid disc
1.6 T4F	01/11→	132 / 180										
2.0	10/07→	107 / 145	Ate		82039300		16" -brake -brake	TRW		2453702	[–] 24537 15.7	⊖ elect. handbr.
2.0 BiFuel	03/13→	157 / 214										
2.0 D	10/07→	100 / 136	Ate		82062900			Luc		82054900		⊕ elect. handbr. vented disc
2.0 FlexiFuel	01/08→	107 / 146										
2.0 T	01/10→	149 / 203	Ate		82515500		16,5"/17,5" -brake	Luc		82073800		⊕ elect. handbr. solid disc
2.4 D	08/07→	120 / 163										
2.4 D	10/09→	129 / 175			92159200	ø 300 x 28 x 52	16" -brake	Luc		82074100		⊖ elect. handbr.
2.5 T	08/07→	147 / 200										
2.5 T	01/10→	170 / 231			92162300	ø 316 x 28 x 52	16,5" -brake			92162900	ø 302 x 11 x 40.7	⊕ elect. handbr.
2.5 T FlexiFuel	05/08→	147 / 200										
2.5 T FlexiFuel	10/09→	170 / 231			92168200	ø 336 x 28 x 52	17,5" -brake			92168400	ø 302 x 12 x 69.3	⊖ elect. handbr.
3.2	08/07→	175 / 238										
3.2	09/09→12/10	168 / 228		PRO	92159203	ø 300 x 28 x 52	16" -brake		PRO	92162903	ø 302 x 11 x 40.7	⊕ elect. handbr.
3.2	05/11→	179 / 243										
3.2	09/11→	171 / 233		PRO	92162303	ø 316 x 28 x 52	16,5" -brake		PRO	92168403	ø 302 x 12 x 69.3	⊖ elect. handbr.
3.2 AWD	08/07→	175 / 238										
3.2 AWD	05/11→	179 / 243		PRO	92168203	ø 336 x 28 x 52	17,5" -brake			92168300	ø 302 x 22 x 40.8	⊕ elect. handbr.
D3	03/10→	100 / 136							PRO	92168303	ø 302 x 22 x 40.8	⊕ elect. handbr.
D3 / D4	03/10→	120 / 163										
D4	10/13→	133 / 181								TPM0011		
D4 AWD	01/13→	120 / 163										
D4 AWD	10/13→	133 / 181										
D5	08/07→	136 / 185										
D5	12/09→	151 / 205										
D5	06/11→	158 / 215										
D5 AWD	10/07→	136 / 185										
D5 AWD	12/09→	151 / 205										
D5 AWD	06/11→	158 / 215										
T4	10/10→	132 / 180										
T5	01/10→	177 / 241										
T5	10/13→	180 / 245										
T6 AWD	08/07→	210 / 286										
T6 AWD	04/11→	224 / 305										
V70 Mk II (SW) 03/00→08/07 → V70 II (SW), Page 1296													
V70 XC 10/97→08/07 → XC70 CROSS COUNTRY, Page 1297													
XC60 05/08→													
		794900	Ate		2439901	[–] 24399 20.2		TRW		2449601	[–] 24496 16.9	
2.0 T	03/10→	149 / 203										
2.4 D	07/09→	129 / 175	Ate		82059200			Luc		82054900		
2.4 D / D3 / D4 AWD	05/08→	120 / 163										
2.4 D AWD	06/09→12/10	129 / 175										
3.2	09/11→	171 / 233										

T - Z

		kW / hp											
XC60 05/08→													
3.2	09/11→	179 / 243	Ate		82062900				PRO	92196403	ø 302 x 22 x 50.9	
3.2 AWD	07/09→	175 / 238		PRO	92196303	ø 328 x 30 x 52				TPM0011		
3.2 AWD	09/09→12/10	168 / 228			TPM0011							
3.2 AWD	03/10→	179 / 243										
3.2 AWD	09/10→	171 / 233										
D3	04/12→	100 / 136										
D3 / D4	03/10→	120 / 163										
D4	10/13→	133 / 181										
D4 AWD	10/13→	133 / 181										
D5	06/11→	158 / 215										
D5 AWD	05/08→	136 / 185										
D5 AWD	07/09→	151 / 205										
D5 AWD	06/11→	158 / 215										
D5 AWD	04/14→	169 / 230										
T5	09/10→	177 / 241										
T5	10/13→	180 / 245										
T6	10/13→	225 / 306										
T6 AWD	05/08→	210 / 286										
T6 AWD	03/10→	224 / 304										
XC60 Estate 05/08→ → XC60, Page 1296													
XC60 Kombi 05/08→ → XC60, Page 1296													
XC70 II 08/07→12/12													
		795000	Ate		2412301	[–] 24123 20.3	16" -brake		TRW	2449601	[–] 24496 16.9	⊕ elect. handbr. vented disc
2.4 D	01/10→	129 / 175	Ate		2414201	[–] 24142 19.8	16,5" -brake 17,5" -brake		TRW	2449602	[–] 24496 16.9	⊕ elect. handbr. solid disc
2.4 D / D4 AWD	08/07→	120 / 163	Ate		82039300				TRW	2453702	[–] 24537 15.7	⊖ elect. handbr.
3.2	08/07→	179 / 243	Ate		82062900				Luc	82054900		⊕ elect. handbr. vented disc
3.2 AWD	08/07→	175 / 238			92159200	ø 300 x 28 x 52	16" -brake		Luc	82073800		⊕ elect. handbr. solid disc
3.2 AWD	08/07→	179 / 243			92162300	ø 316 x 28 x 52	16,5" -brake		Luc	82074100		⊖ elect. handbr.
3.2 AWD	09/09→	168 / 228			92168200	ø 336 x 28 x 52	17,5" -brake			92162900	ø 302 x 11 x 40.7	⊕ elect. handbr.
3.2 AWD	09/10→	171 / 233		PRO	92159203	ø 300 x 28 x 52	16" -brake			92168400	ø 302 x 12 x 69.3	⊖ elect. handbr.
D3	08/11→	120 / 163		PRO	92162303	ø 316 x 28 x 52	16,5" -brake		PRO	92162903	ø 302 x 11 x 40.7	⊕ elect. handbr.
D3 AWD	08/11→	120 / 163		PRO	92168203	ø 336 x 28 x 52	17,5" -brake		PRO	92168403	ø 302 x 12 x 69.3	⊖ elect. handbr.
D4	10/13→	133 / 181			TPM0011					92168300	ø 302 x 22 x 40.8	⊕ elect. handbr.
D4 AWD	10/13→	133 / 181							PRO	92168303	ø 302 x 22 x 40.8	⊕ elect. handbr.
D5 AWD	08/07→	136 / 185								TPM0011		
D5 AWD	12/09→	151 / 205										
D5 AWD	06/11→	158 / 215										
T5	10/13→	180 / 245										
T6 AWD	01/08→	210 / 286										
T6 AWD	01/10→	224 / 304										
		795100	Ate		2412301	[–] 24123 20.3	16'' -brake		TRW	2449601	[–] 24496 16.9	vented disc
3.2	09/10→12/12	171 / 233	Ate		2414201	[–] 24142 19.8	16,5''/17,5'' -brake		TRW	2449602	[–] 24496 16.9	solid disc
			Ate		82039300		16'' -brake			92162900	ø 302 x 11 x 40.7	
			Ate		82515500		16,5''/17,5'' -brake		PRO	92162903	ø 302 x 11 x 40.7	
					92159200	ø 300 x 28 x 52	16'' -brake			92168300	ø 302 x 22 x 40.8	
					92162300	ø 316 x 28 x 52	16,5'' -brake		PRO	92168303	ø 302 x 22 x 40.8	
					92168200	ø 336 x 28 x 52	17,5'' -brake					
				PRO	92159203	ø 300 x 28 x 52	16'' -brake					
				PRO	92162303	ø 316 x 28 x 52	16,5'' -brake					
				PRO	92168203	ø 336 x 28 x 52	17,5'' -brake					
					TPM0011							
XC70 II Estate 08/07→12/12 → XC70 II, Page 1297													
XC70 II Kombi 08/07→12/12 → XC70 II, Page 1297													
XC70 CROSS COUNTRY 10/97→08/07													
		795200	Ate		2307303	[–] 23073 18.9			Gir	2138501	[–] 21385 13.9	→587441
2.0 T5 AWD	10/97→03/99	166 / 226	Ate	epad	2307381	[–] 23073 18.9			Ate	2307602	[–] 23076 17.5	587442→
			Ate		2307401	[–] 23074 18.9	17" -brake		Ate	2307681	[–] 23076 17.5	587442→
			Ate		82032000				Ate	82029300		

		kW / hp									
XC70 CROSS COUNTRY 10/97→08/07											
		795200	Ate		82062900			Ate		82062900		
2.0 T5 AWD	10/97→03/99	166 / 226		PRO	92100503	ø 285.5 x 26 x 50.3	15" -brake			92088600	ø 283 x 10 x 62	→587441
				PRO	92100603	ø 305 x 28 x 50.3	16" -brake		PRO	92149203	ø 288 x 12 x 62	587442→
										91062300	ø 178 x 25	
		795300	Ate		2307303	[–] 23073 18.9		Ate		2307602	[–] 23076 17.5	
2.4 D5 AWD	12/05→08/07	136 / 185	Ate	epad	2307381	[–] 23073 18.9		Ate	epad	2307681	[–] 23076 17.5	
			Ate		2307401	[–] 23074 18.9	17" -brake	Ate		82029300		
			Ate		82032000			Ate		82062900		
			Ate		82062900					92088600	ø 283 x 10 x 62	→587441
				PRO	92100503	ø 285.5 x 26 x 50.3	15" -brake		PRO	92100703	ø 288 x 12 x 65	587442→
				PRO	92100603	ø 305 x 28 x 50.3	16" -brake			91062300	ø 178 x 25	
		795400	Ate		2307303	[–] 23073 18.9		Ate		2307602	[–] 23076 17.5	
2.4 D5 XC AWD	09/02→08/07	120 / 163										
2.5 T XC AWD	09/02→08/07	154 / 209	Ate	epad	2307381	[–] 23073 18.9		Ate	epad	2307681	[–] 23076 17.5	
			Ate		2307401	[–] 23074 18.9	17" -brake	Ate		82029300		
			Ate		82032000			Ate		82062900		
			Ate		82062900					92088600	ø 283 x 10 x 62	→587441
				PRO	92100503	ø 285.5 x 26 x 50.3	15" -brake		PRO	92100703	ø 288 x 12 x 65	
				PRO	92100603	ø 305 x 28 x 50.3	16" -brake			91062300	ø 178 x 25	
		795500	Ate		2307303	[–] 23073 18.9		Gir		2138501	[–] 21385 13.9	→587441
2.4 T XC AWD	11/97→09/02	142 / 193	Ate	epad	2307381	[–] 23073 18.9		Ate		2307602	[–] 23076 17.5	587442→
			Ate		2307401	[–] 23074 18.9	17" -brake	Ate	epad	2307681	[–] 23076 17.5	587442→
			Ate		82032000			Ate		82029300		
			Ate		82062900			Ate		82062900		
				PRO	92100503	ø 285.5 x 26 x 50.3	15" -brake			92088600	ø 283 x 10 x 62	→587441
				PRO	92100603	ø 305 x 28 x 50.3	16" -brake		PRO	92100703	ø 288 x 12 x 65	
										91062300	ø 178 x 25	
		795600	Ate		2307303	[–] 23073 18.9		Ate		2307602	[–] 23076 17.5	
2.4 T XC AWD	03/00→09/02	147 / 200	Ate	epad	2307381	[–] 23073 18.9		Ate	epad	2307681	[–] 23076 17.5	
			Ate		2307401	[–] 23074 18.9	17" -brake	Ate		82029300		
			Ate		82032000			Ate		82062900		
			Ate		82062900				PRO	92100703	ø 288 x 12 x 65	
				PRO	92100503	ø 285.5 x 26 x 50.3	15" -brake			91062300	ø 178 x 25	
				PRO	92100603	ø 305 x 28 x 50.3	16" -brake					
		795700	Ate		2307303	[–] 23073 18.9		Ate		2307602	[–] 23076 17.5	
2.5 T XC AWD	08/02→07/07	162 / 220	Ate	epad	2307381	[–] 23073 18.9		Ate	epad	2307681	[–] 23076 17.5	
			Ate		2307401	[–] 23074 18.9	17" -brake	Ate		82029300		
			Ate		82032000					92088600	ø 283 x 10 x 62	→587441
				PRO	92100503	ø 285.5 x 26 x 50.3	15" -brake		PRO	92100703	ø 288 x 12 x 65	
				PRO	92100603	ø 305 x 28 x 50.3	16" -brake			91062300	ø 178 x 25	

XC70 CROSS COUNTRY Estate 10/97→08/07 → XC70 CROSS COUNTRY, Page 1297

kW / hp

XC70 CROSS COUNTRY Kombi 10/97→08/07 → XC70 CROSS COUNTRY, Page 1297

XC90 I 10/02→

		795800	Ate	2359001	[–] 23590 19	16" -brake	Ate	2401101	[–] 24011 17.7	
2.5 T	10/02→	154 / 209								
3.2 AWD	05/06→	175 / 238	Ate	2414101	[–] 24141 19.8	17" -brake	Ate	82029200		
3.2 AWD	04/10→	179 / 243								
D3 / D5	04/09→	120 / 163	Ate	82062900			Ate	82062900		
D5	10/02→	120 / 163								
D5	05/06→	136 / 185	Ate	82500900				92126803	ø 308 x 20 x 65	
D5	01/11→	147 / 200								
T6	10/02→	200 / 272		92126603	ø 316 x 28 x 50.5	16" -brake		91062300	ø 178 x 25	
V8	01/05→	232 / 315								
				92126703	ø 336 x 30 x 51.3	17"/17,5" -brake		97034900		
		795900	Ate	2359001	[–] 23590 19	16" -brake	Ate	2401101	[–] 24011 17.7	
2.5 T	09/04→12/06	155 / 211								
3.2	09/11→	179 / 243	Ate	2414101	[–] 24141 19.8	17" -brake	Ate	82029200		
			Ate	82500900				92126803	ø 308 x 20 x 65	
				92126603	ø 316 x 28 x 50.5	16" -brake		91062300	ø 178 x 25	
				92126703	ø 336 x 30 x 51.3	17"/17,5" -brake		97034900		
		796000	Ate	2359001	[–] 23590 19	16" -brake	Ate	2401101	[–] 24011 17.7	
3.2	09/11→	175 / 238								
			Ate	2414101	[–] 24141 19.8	17,5" -brake		92126803	ø 308 x 20 x 65	→633384
			Ate	2439901	[–] 24399 20.2	17" -brake				
				92126603	ø 316 x 28 x 50.5	16" -brake →633384				
				92126703	ø 336 x 30 x 51.3	17"/17,5" -brake				

XC90 I Estate 10/02→ → XC90 I, Page 1299

XC90 I Kombi 10/02→ → XC90 I, Page 1299

kW / hp

S40 (MS) 06/06→

		796100	Ate	2372301	[–] 23723 18.2		Ate	2521201	[–] 25212 16.1	
2.4	06/06→	125 / 168								
2.5	06/06→	162 / 217	Ate	2372381	[–] 23723 18.2		Ate	2521281	[–] 25212 16.1	
			Ate	82032000			Ate	2413701	[–] 24137 16.7	
			Ate	82062900			Ate	2413781	[–] 24137 16.7	
				92149100	ø 320 x 25 x 48.5	⊕ rim size 17"	Ate	82062900		
				92141203	ø 278 x 25 x 48.5	⊕ rim size 15"	Ate	82503500		
				92141303	ø 300 x 25 x 48.5	⊕ rim size 16"		92133803	ø 280 x 10.9 x 40.8	
				92149103	ø 320 x 25 x 48.5	⊕ rim size 17"				

kW / hp

ROADSTER 01/96→

		796200	Ate	2328702	[o] 23287 17.8		Ate	2160702	[o] 21607 17.3	→12/99
2.8	01/96→	142 / 193								
			Ate	2328781	[o] 23287 17.8		Ate	2160781	[o] 21607 17.3	→12/99
							Ate	2193402	[o] 21934 17.3	01/00→
							Ate	2193481	[o] 21934 17.3	01/00→
		796300	Ate	2347402	[o] 23474 20.3		Ate	2099501	[o] 20995 17.3	
MF3	01/96→	236 / 321								
MF3	07/03→	252 / 343		98019500	L810			98013400	L790	
			Ate	82030500			Ate	82028700		

T - Z

WIESMANN

WIESMANN

		kW / hp									
ROADSTER 01/96→											
796300			Ate		82062900			Ate		82062900		
MF3	01/96→	236 / 321			92071100	ø 315 x 28 x 52.5	left		PRO	92098703	ø 312 x 20 x 61	left
MF3	07/03→	252 / 343			92071200	ø 315 x 28 x 52.5	right		PRO	92098803	ø 312 x 20 x 61	right
				PRO	92071103	ø 315 x 28 x 52.5	left			91033400	ø 180 x 25	
				PRO	92071203	ø 315 x 28 x 52.5	right			97008100		
796400			Ate		2318302	[o] 23183 20.3		Ate		2128201	[o] 21282 17.3	
MF30	07/03→	170 / 231										

ZASTAVA

ZASTAVA

		kW / hp									
10 (188) 10/05→											
796500			Ben		2143602	[–] 21436 17		Lkh		91054300	ø 180 x 32	Lockheed ⊖ ABS
1.2 60	10/05→	44 / 60	Ben		2143603	[+] 21436 17		Lkh		91054400	ø 180 x 32	Lockheed ⊕ ABS
			Ben		82033600			Lkh		97009500		⊖ ABS
			Ben		82063600			Lkh		97014900		⊕ ABS
				PRO	92061103	ø 240 x 11 x 40		Lkh		84054300	bore ø 20.6 ø 180 x 32	Lockheed
								Lkh		84054400	bore ø 20.6 ø 180 x 32	Lockheed ⊕ ABS
										94014800	ø 180,0 x 40.1	
YUGO FLORIDA 10/88→											
796600			Luc		2110005	[+] 21100 17		Ben		91005900	ø 185 x 31	
1.1	08/89→	44 / 60			92019300	ø 227 x 10.8 x 45.8		Fia		97002500		
1.3 (103 A)	03/91→	50 / 68								94006400	ø 185,3 x 35.7	
1.4 CAT	10/88→	52 / 71										

ZAZ

ZAZ

		kW / hp									
LANOS Hatchback 10/04→											
796700			Ate		2054701	[o] 20547 16.8				91044900	ø 200 x 45	
1.4	10/04→	55 / 75	Ate		82030600					94008600	ø 200,0 x 52.5	⊕ ABS
				PRO	92029603	ø 236 x 20 x 41				94035100	ø 200,0 x 53.6	⊖ ABS
796800			Ate		2054701	[o] 20547 16.8				91044900	ø 200 x 45	
1.5	10/04→	63 / 86		PRO	92029603	ø 236 x 20 x 41				97033700		
										94008600	ø 200,0 x 52.5	⊕ ABS
										94035100	ø 200,0 x 53.6	⊖ ABS
796900			Ate		2186201	[o] 21862 18.3				91044900	ø 200 x 45	
1.6 16V	10/04→	78 / 106	Ate		82030600					94008600	ø 200,0 x 52.5	⊕ ABS
				PRO	92039203	ø 256 x 24 x 41				94035100	ø 200,0 x 53.6	⊖ ABS
LANOS PICK-UP 10/04→											
797000			Ate		2054701	[o] 20547 16.8				91044900	ø 200 x 45	
1.4	10/04→	55 / 75		PRO	92029603	ø 236 x 20 x 41				94008600	ø 200,0 x 52.5	⊕ ABS
										94035100	ø 200,0 x 53.6	⊖ ABS
797100			Ate		2054701	[o] 20547 16.8				91044900	ø 200 x 45	
1.5	10/04→	63 / 86		PRO	92029603	ø 236 x 20 x 41				97033700		
										94008600	ø 200,0 x 52.5	⊕ ABS

→

		kW / hp										
LANOS PICK-UP 10/04→												
1.5	10/04→	797100 63 / 86							94035100	ø 200,0 x 53.6	⊖ ABS
LANOS Saloon 10/04→												
1.4	10/04→	797200 55 / 75	Ate		2054701	[o] 20547 16.8			91044900	ø 200 x 45	
			Ate		82030600				97033700		
				PRO	92029603	ø 236 x 20 x 41			94008600	ø 200,0 x 52.5	⊕ ABS
									94035100	ø 200,0 x 53.6	⊖ ABS
1.5	10/04→	797300 63 / 86	Ate		2054701	[o] 20547 16.8			91044900	ø 200 x 45	
				PRO	92029603	ø 236 x 20 x 41			97033700		
									94008600	ø 200,0 x 52.5	⊕ ABS
									94035100	ø 200,0 x 53.6	⊖ ABS
1.6 16V	10/04→	797400 78 / 106	Ate		2186201	[o] 21862 18.3			91044900	ø 200 x 45	
			Ate		82030600				97033700		
				PRO	92039203	ø 256 x 24 x 41			94008600	ø 200,0 x 52.5	⊕ ABS
									94035100	ø 200,0 x 53.6	⊖ ABS
LANOS Schrägheck 10/04→ → LANOS Hatchback, Page 1300												
LANOS Stufenheck 10/04→ → LANOS Saloon, Page 1301												
SENS / CHANCE Schrägheck 10/04→ → LANOS Hatchback, Page 1300												
SENS / CHANCE Stufenheck 10/04→ → LANOS Saloon, Page 1301												
SENS / CHANCE Наклонная задняя часть 10/04→ → LANOS Hatchback, Page 1300												
SENS / CHANCE седан 10/04→ → LANOS Saloon, Page 1301												
TAVRIA (1102) 01/89→												
1.1	01/89→	797500 37 / 50	Luc		2117002	[–] 21170 17	→03/00				
1.3	01/89→	44 / 60	Luc		82062800		→03/00				
					92039100	ø 239 x 12 x 42.6					

T - Z

Illustrations

Abbildungen
Illustrations
Raf gurazioni
Ilustraciones

AC

2098101 Th. 13.7	2135803 Th. 19.8
20981 137 1 4	21358 198 0 5
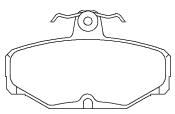	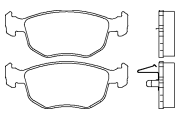
89.9 x 53.6	156.3 x 58.6

ACURA

2165101 Th. 17.3	2171901 Th. 14.6	2173801 Th. 13	2184501 Th. 16.5	2187503 Th. 15.8	2335501 Th. 15	2342001 Th. 16.5
21651 173 0 5	21719 146 0 5	21738 130 0 5	21845 165 0 5	21875 158 0 5	23355 150 0 5	23420 165 0 5
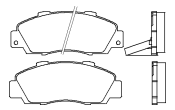	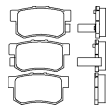	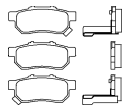	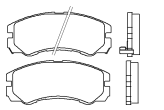	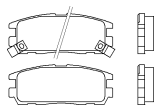	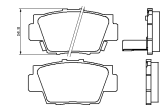	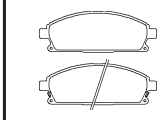
148.6 x 57.7	88.7 x 46.8	88.8 x 36.8	137.8 x 58.6	109.5 x 42.6	111 x 56.8	159 x 56.1

2356601 Th. 17.2	2365201 Th. 14.8	2372901 Th. 17	2434201 Th. 17.8
23566 172 0 5	23652 148 0 5	23729 170 0 5	24342 178 1 5
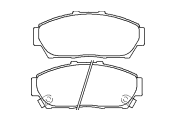	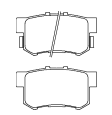	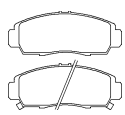	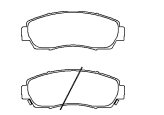
129 x 54.8	88.8 x 47.5	148.7 x 58.5	154.6 x 58.6

AIXAM

2473001 Th. 10.2	2473401 Th. 10.2
24730 103 0 5	24734 103 0 5
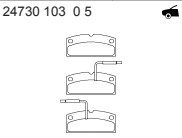	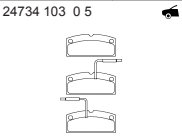
89.6 x 41.5	89.6 x 41.5

ALFA ROMEO

2083302 Th. 17.1	2138103 Th. 18	2160601 Th. 16.6	2163702 Th. 19	2192701 Th. 17.9	2192901 Th. 17.9	2193201 Th. 17.9
20833 171 2 5	21381 180 0 5	21606 166 2 4	21637 190 0 5	21927 179 0 5	21929 179 0 5	21932 179 0 5
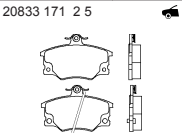	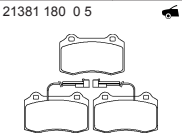	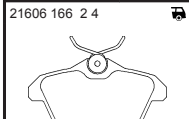	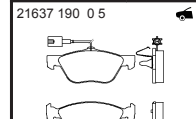	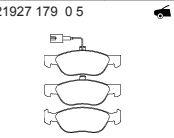	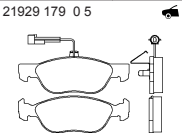	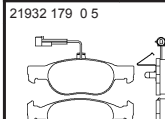
103.8 x 66.6	109.8 x 69.3	90 x 50	155.1/156.3 x 61.7/58.9	156.3 x 52.6	156.5 x 52.6	151.3 x 52

2309201 Th. 16	2314002 Th. 19.3	2314101 Th. 19.3	2316803 Th. 19.3	2317703 Th. 14.4	2322201 Th. 19	2328902 Th. 19
23092 160 0 5	23140 193 0 5	23141 193 0 5	23168 193 2 5	23177 144 1 4	23222 190 0 5	23289 190 0 5
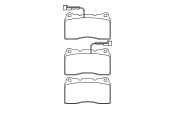	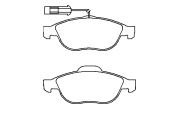	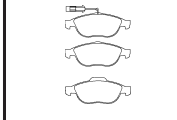	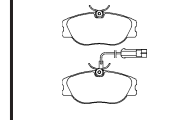	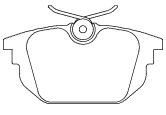	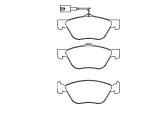	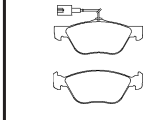
131.6 x 77.2	155.1/156.3 x 59.1/63.8	155.1/156.5 x 59.1/63.8	130.1 x 58.7	87.2 x 44.6	155.1/156.3 x 61.7/58.9	155.1/155.1 x 61.7/58.9

2351703 Th. 16.5	2351705 Th. 17.2	2371102 Th. 18.2	2371104 Th. 19.4	2371401 Th. 15.5	2371481 Th. 15.5	2375601 Th. 15.7
23517 165 1 4	23517 172 1 5	23711 182 1 5	23711 194 1 5	23714 155 1 4	23714 155 1 4 epad	23756 157 0 5
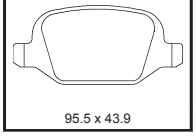	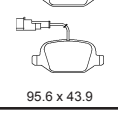	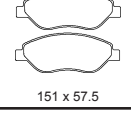	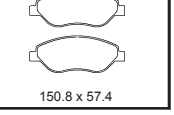	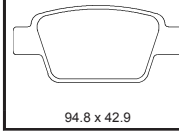	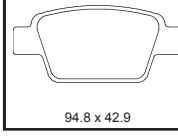	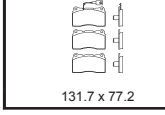
95.5 x 43.9	95.6 x 43.9	151 x 57.5	150.8 x 57.4	94.8 x 42.9	94.8 x 42.9	131.7 x 77.2

2375603 Th. 16	2375701 Th. 16	2376001 Th. 17.8	2376002 Th. 17.8	2381101 Th. 17.8	2397901 Th. 17.8	2416202 Th. 15.3
23756 160 0 5	23757 160 0 5	23760 178 1 4	23760 178 2 4	23811 178 1 5	23979 178 1 5	24162 153 0 5
	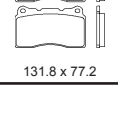	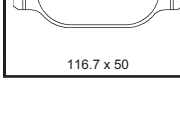	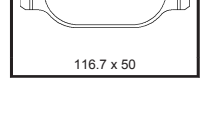			
131.7 x 77.2	131.8 x 77.2	116.7 x 50	116.7 x 50	116.7 x 50	122.8 x 53.3	125 x 70.8

ALFA ROMEO

2427301 Th. 16	2433901 Th. 20.5	2434001 /20.1	2485201 Th. 15.8	2515601 Th. 17.8	2518001 /18.5
24273 160 0 5	24339 205 0 5	24340 201 0 5	24852 158 0 5	25156 178 1 5	25180 185 0 5
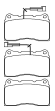	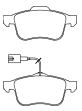	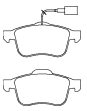	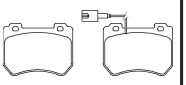	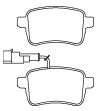	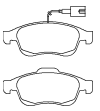
131.6 x 77.2	156.3/155.1 x 71.5/69	155.2/155.5 x 69/71.5	109.3 x 80.3	95.5 x 48	155.3/155.3 x 59.4/64.7

ALPINA

2148401 Th. 20.8	2148602 Th. 19.3	2148681 Th. 19.3	2148701 Th. 17.2	2148781 Th. 17.2	2169103 Th. 17.3	2169181 Th. 17.3
21484 208 0 5	21486 193 0 5	21486 193 0 5 epad	21487 172 0 5 T4183	21487 172 0 4 epad	21691 173 0 5	21691 173 0 5 epad
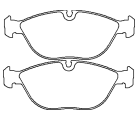	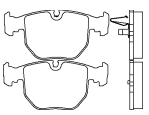	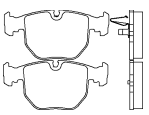	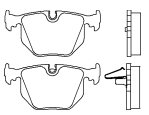	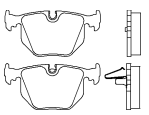	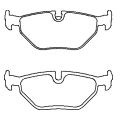	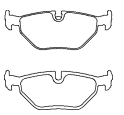
194.5 x 73.5	156.5 x 73.6	156.4 x 73.6	123.2 x 59.2	123.2 x 59.2	121.8/122 x 45/45	121.8/122 x 45/45

2373101 Th. 16.9	2504501 Th. 19.3	2504581 Th. 19.3
23731 169 0 5	25045 193 0 5	25045 193 0 5 epad
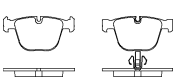	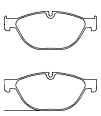	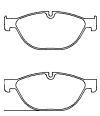
139.7 x 67.1	191.9/192.8 x 79.4	191.9/192.8 x 79.4

ASIA MOTORS

2069901 Th. 15.2	2078001 Th. 13.4	2344201 Th. 16	2378401 Th. 15.5
20699 152 0 4	20780 134 0 4	23442 160 0 5	23784 155 0 5
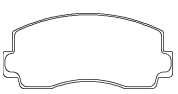	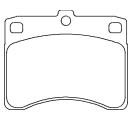	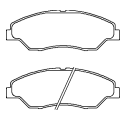	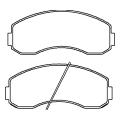
128 x 56.2	78.7 x 63.5	148.9 x 52.8	154.1 x 63.6

ASTON MARTIN

2000702 Th. 15.2	2002701 Th. 16	2016501 Th. 15.6	2021703 Th. 16.6	2038001 Th. 15.6	2127501 Th. 16.9	2448701 Th. 16
20007 152 0 4	20027 160 0 4	20165 156 0 5	20217 166 0 5	20380 156 0 4	21275 169 1 5 T4067	24487 166 0 5
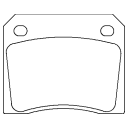	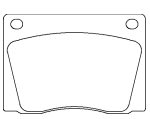	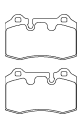	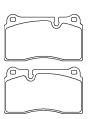	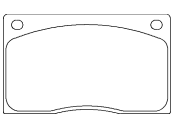	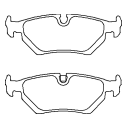	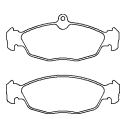
80.7 x 66	98.2 x 68.6	109.8 x 69.4	131.6 x 77.3	119.7 x 71	123 x 43	140.3 x 58/48

2461001 Th. 14.3	2477801 Th. 16.6
24610 143 0 5	24778 166 0 5
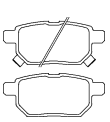	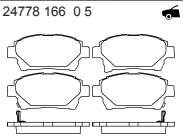
98.7 x 42.6	116.5 x 51.3/53.8

AUDI

2066921 Th. 19.6	2113802 Th. 19.5	2114401 Th. 16.6	2145201 Th. 18.5	2145401 Th. 18.5	2148401 Th. 20.8	2162402 Th. 20.4
20669 196 1 4	21138 195 1 5	21144 166 1 4	21452 185 1 5	21454 185 1 5	21484 208 0 5	21624 204 0 5
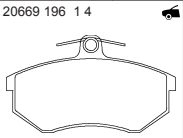	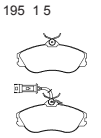	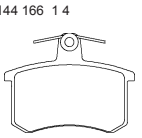			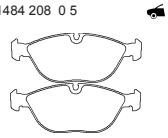	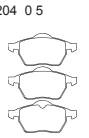
119 x 69.5	144.8 x 66.9	87.6 x 67.5	63.5/76.7 x 77.5/85.6	63.5/76.4 x 77.5/85.4	194.5 x 73.5	156.2 x 74

AUDI

2191102 Th. 20.6	2193801 Th. 20.4	2193881 Th. 20.4	2194503 Th. 19.6	2194504 Th. 19.6	2301802 Th. 20.4	2301881 Th. 20.4
21911 206 0 5	21938 204 0 5	21938 204 0 5 epad	21945 196 1 4	21945 196 1 5	23018 204 0 5	23018 204 0 5 epad
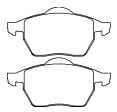	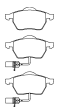	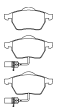	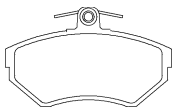	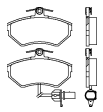	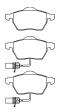	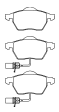
156.4 x 74	156.4 x 74	156.4 x 74	119.2 x 69.5	119.2 x 69.5	156.4 x 74	156.4 x 74

2311901 /18.5	2313001 Th. 19.7	2313081 Th. 19.7	2313101 Th. 19.7	2313181 Th. 19.7	2328001 /18.3	2332601 Th. 17.7
23119 185 0 5	23130 197 0 5	23130 197 0 5 epad	23131 197 0 5	23131 197 0 5 epad	23280 183 0 5	23326 177 1 4
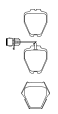	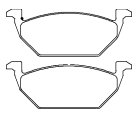	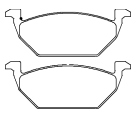	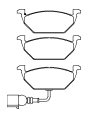	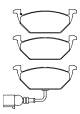		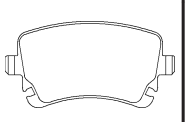
63.4/78.3 x 75.3/74.6	146 x 54.6	146 x 54.6	146 x 54.7	146 x 54.7	63.5/78.3 x 75.3/74.6	116.5 x 59

2332607 Th. 17.7	2332681 Th. 17.7	2339201 Th. 20.6	2339502 Th. 14.5	2355401 Th. 15.2	2355402 Th. 17.2	2355481 Th. 17.2
23326 177 4 4	23326 177 1 4 epad	23392 206 0 5	23395 145 0 5	23554 152 1 4	23554 172 1 4	23554 172 1 4 epad
		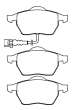	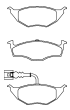			
116.5 x 59	116.5 x 59	156.5 x 74.2	141.7/141.5 x 48.3/48.2	87 x 53	87 x 53	87 x 53

2355482 Th. 15.2	2358701 Th. 20.3	2358704 Th. 20.3	2358781 Th. 20.3	2358782 Th. 20.3	2369302 Th. 16.7	2369381 Th. 16.7
23554 152 1 4 epad	23587 203 0 5	23587 203 9 5	23587 203 0 5 epad	23587 203 9 5 epad	23693 167 0 4	23693 167 0 4 epad
	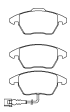	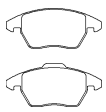	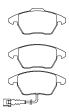	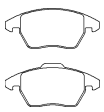	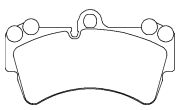	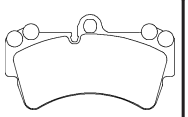
87 x 53	156.5/155.3 x 71.3/66	155.3/156.5 x 66/71.3	156.5/155.3 x 71.3/66	155.3/156.5 x 66/71.3	190 x 106.3	190 x 106.3

2369402 Th. 16.7	2369481 Th. 16.7	2375101 Th. 16.7	2376201 Th. 20.4	2376281 Th. 20.4	2376302 Th. 20.3	2376381 Th. 20.3
23694 167 0 4	23694 167 0 4 epad	23751 167 0 5	23762 204 0 5	23762 204 0 5 epad	23763 203 0 5	23763 203 0 5 epad
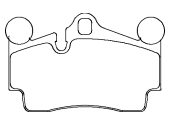	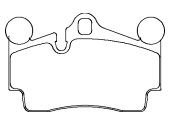		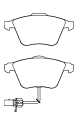	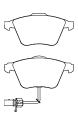	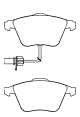	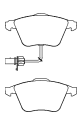
117 x 73	117 x 73	95.7 x 74.2	156.5/155.3 x 72.9	156.5/155.3 x 72.9	156.5/155.3 x 72.9	156.5/155.3 x 72.9

2377301 Th. 17.5	2380101 Th. 20.3	2380181 Th. 20.3	2388501 Th. 20.5	2389601 Th. 20.5	2391301 Th. 20.3	2391401 Th. 17.2
23773 175 0 5	23801 204 0 5	23801 204 0 5 epad	23885 205 0 5	23896 204 0 5	23913 203 0 5	23914 172 1 4
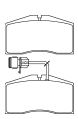	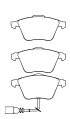	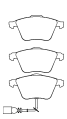	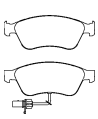	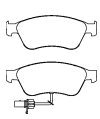		
131.8 x 75	156.3/155.1 x 72.9	156.3/155.1 x 72.9	193.2/193.4 x 72.6/72.6	193.2/193.4 x 72.6	155.1/156.3 x 72.9	105.5 x 56.5

2391402 Th. 17.2	2391481 Th. 17.2	2391482 Th. 17.2	2395001 Th. 20.3	2395081 Th. 20.3	2401001 Th. 16.7	2409803 Th. 16
23914 172 2 4	23914 172 1 4 epad	23914 172 2 4 epad	23950 203 0 5	23950 203 0 5 epad	24010 167 0 4	24098 160 0 4
105.5 x 56.5	105.5 x 56.5	105.5 x 56.5	156.3/155.1 x 72.9	156.3/155.1 x 72.9	117 x 73	131.8 x 77.2

2421101 Th. 17.2	2433301 /20.6	2445501 Th. 16.9	2448301 Th. 17.2	2448381 Th. 17.2	2451601 Th. 16.7	2451701 Th. 16.7
24211 172 1 5	24333 199 0 5	24455 169 0 4	24483 172 1 4	24483 172 1 4 epad	24516 167 0 5	24517 167 0 5
87 x 53	155.1 x 72.2/66.4	189.6 x 93.2	105.5 x 56.3	105.5 x 56.3	95.3 x 74.2	95.3 x 74.2

2456301 Th. 17.7	2460601 Th. 17.7	2460602 Th. 17.7	2460681 Th. 17.7	2460682 Th. 17.7	2461401 Th. 16.6	2470601 Th. 20
24563 177 1 4	24606 177 1 4	24606 177 2 4	24606 177 1 4 epad	24606 177 2 4 epad	24614 166 0 4	24706 200 0 5
109.2 x 53.3	116.6 x 59	116.6 x 59	116.6 x 59	116.6 x 59	132.1 x 81.5	155.2 x 71.6/66.4

AUDI

2470681 Th. 20	2473801 Th. 20	2474301 Th. 19.4	2474381 Th. 19.4	2484701 Th. 17	2488801 Th. 16.7	2500801 Th. 16.4
24706 200 0 5 epad	24738 200 1 5	24743 194 1 5	24743 194 1 5 epad	24847 170 0 4	24888 167 0 5	25008 164 0 5
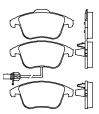	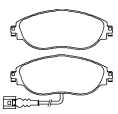	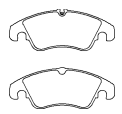	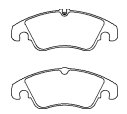	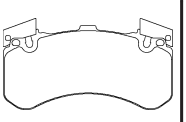		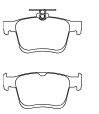
155.2 x 71.6/66.4	175 x 69.5	188 x 74.2/73.9	188 x 74.2/73.9	188.8 x 101	95.3 x 74.2	123 x 61.2/56.2

2500901 Th. 16.4	2515802 Th. 20	2516002 Th. 20	2521401 Th. 17.5	2521402 Th. 17.5	2521403 Th. 17.5	2521404 Th. 17.5
25009 164 0 5	25158 200 0 5	25160 200 0 5	25217 175 7 5	25214 175 1 5	25214 175 3 5	25214 175 4 5
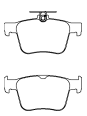	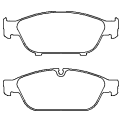	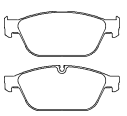				
123 x 61.2/56.2	192.9 x 74/70.9	192.9 x 76.4	116.6 x 59/60	116.6 x 60/59	116.6 x 60/59	116.6 x 60/59

2564301 Th. 16.7	2564302 Th. 15.6	2564305 Th. 16.7	2568301 Th. 20.3
25643 167 0 5	25643 156 0 4	25643 167 0 4	25683 203 1 5
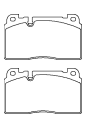	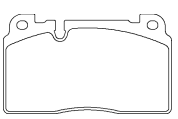	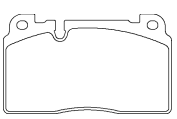	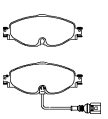
131.6 x 77.3	131.6 x 77.3	131.6 x 77.3	160 x 64.8

AUDI (FAW)

2016801 Th. 16.2	2301802 Th. 20.4	2301881 Th. 20.4	2332601 Th. 17.7	2332681 Th. 17.7	2355402 Th. 17.2	2355481 Th. 17.2
20168 162 1 4	23018 204 0 5	23018 204 0 5 epad	23326 177 1 4	23326 177 1 4 epad	23554 172 1 4	23554 172 1 4 epad
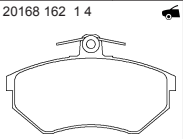	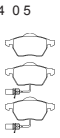	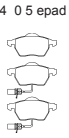			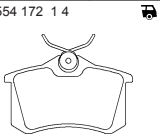	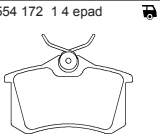
118.9 x 69	156.4 x 74	156.4 x 74	116.5 x 59	116.5 x 59	87 x 53	87 x 53

2376302 Th. 20.3	2376381 Th. 20.3	2391401 Th. 17.2	2391481 Th. 17.2	2395001 Th. 20.3	2395081 Th. 20.3	2433301 /20.6
23763 203 0 5	23763 203 0 5 epad	23914 172 1 4	23914 172 1 4 epad	23950 203 0 5	23950 203 0 5 epad	24333 199 0 5
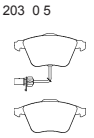	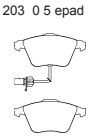				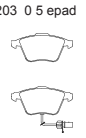	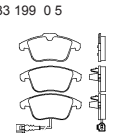
156.5/155.3 x 72.9	156.5/155.3 x 72.9	105.5 x 56.5	105.5 x 56.5	156.3/155.1 x 72.9	156.3/155.1 x 72.9	155.1 x 72.2/66.4

2448301 Th. 17.2	2448381 Th. 17.2	2460601 Th. 17.7	2460602 Th. 17.7	2460682 Th. 17.7	2470601 Th. 20	2470681 Th. 20
24483 172 1 4	24483 172 1 4 epad	24606 177 1 4	24606 177 2 4	24606 177 2 4 epad	24706 200 0 5	24706 200 0 5 epad
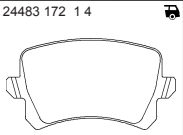	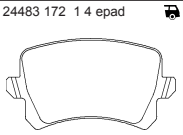	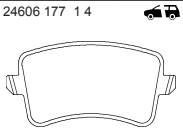	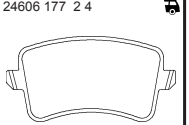	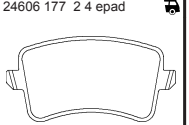	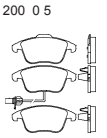	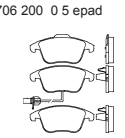
105.5 x 56.3	105.5 x 56.3	116.6 x 59	116.6 x 59	116.6 x 59	155.2 x 71.6/66.4	155.2 x 71.6/66.4

2474301 Th. 19.4	2474381 Th. 19.4
24743 194 1 5	24743 194 1 5 epad
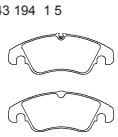	
188 x 74.2/73.9	188 x 74.2/73.9

BENTLEY

2148401 Th. 20.8	2330902 Th. 17.3	2332607 Th. 17.7	2382201 /20.4
21484 208 0 5	23309 173 0 5	23326 177 4 4	23822 204 0 5
194.5 x 73.5	140.7/140.7 x 67.6/67.3	116.5 x 59	193.2 x 81.9

BMW

2096801 Th. 20.3	2099501 Th. 17.3	2128201 Th. 17.3	2147102 Th. 18	2148401 Th. 20.8	2148602 Th. 19.3	2148604 Th. 19.3
20968 203 0 5	20995 173 0 5	21282 173 0 5	21471 180 0 4	21484 208 0 5	21486 193 0 5	21486 193 0 5
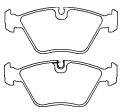	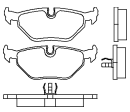	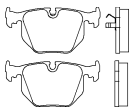	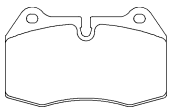	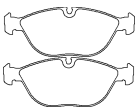	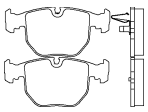	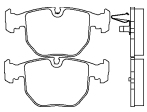
156.3 x 63.9	123 x 45	123 x 59.4	119.8 x 73.7	194.5 x 73.5	156.5 x 73.6	156.4 x 73.6

2148681 Th. 19.3	2148701 Th. 17.2	2148703 Th. 17.2	2148781 Th. 17.2	2160702 Th. 17.3	2160781 Th. 17.3	2167703 Th. 20.3
21486 193 0 5 epad	21487 172 0 5 T4183	21487 172 0 5 T4126	21487 172 0 4 epad	21607 173 0 5	21607 173 0 5 epad	21677 203 0 5
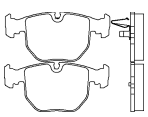	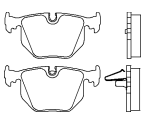	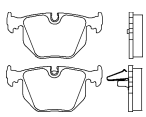	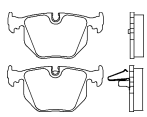	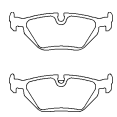	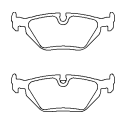	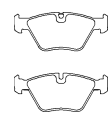
156.4 x 73.6	123.2 x 59.2	123.2 x 59.2	123.2 x 59.2	123 x 43.7	123 x 43.7	155.3 x 63.9

2167781 Th. 20.3	2169103 Th. 17.3	2169181 Th. 17.3	2193402 Th. 17.3	2193481 Th. 17.3	2199003 Th. 20.3	2199081 Th. 20.3
21677 203 0 5 epad	21691 173 0 5	21691 173 0 5 epad	21934 173 0 5	21934 173 0 5 epad	21990 203 0 5	21990 203 0 5 epad
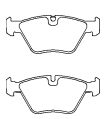	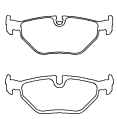	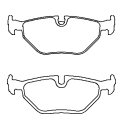	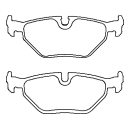	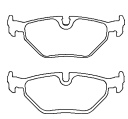	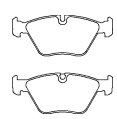	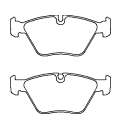
155.3 x 63.9	121.8/122 x 45/45	121.8/122 x 45/45	123 x 44.8	123 x 44.8	154.6/154.6 x 63.9/63.9	154.6/154.6 x 63.9/63.9

2318302 Th. 20.3	2318381 Th. 20.3	2328702 Th. 17.8	2328781 Th. 17.8	2331207 Th. 20.3	2331211 Th. 20.3	2331281 Th. 20.3
23183 203 0 5	23183 203 0 5 epad	23287 178 0 5	23287 178 0 5 epad	23312 203 0 5 T4165	23312 203 9 5 T4165	23312 203 0 5 epad
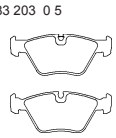	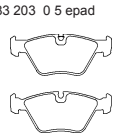	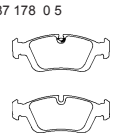	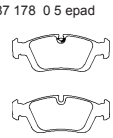	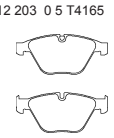	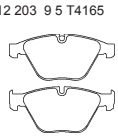	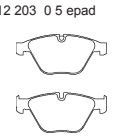
155.3/155.3 x 63.9/63.9	155.1/156.3 x 63.9/63.9	151.3/150.3 x 57.7/57.7	151.3/150.3 x 57.7/57.7	155.3/155.3 x 68.3/68.3	155.3/155.3 x 68.3/68.3	155.3/155.3 x 68.3/68.3

2331282 Th. 20.3	2331301 Th. 20.3	2331303 Th. 20.3	2331381 Th. 20.3	2331382 Th. 20.3	2344702 Th. 17.3	2344704 Th. 17.3
23312 203 9 5 epad	23313 203 0 5	23313 203 9 5	23313 203 0 5 epad	23313 203 9 5 epad	23447 173 0 5 T4166	23447 173 9 5 T4126
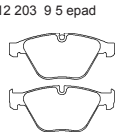	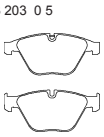	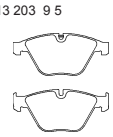	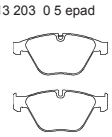	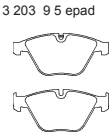	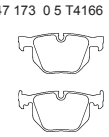	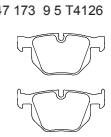
155.3/155.3 x 68.3/68.3	155.3 x 68.3/68.3	155.3 x 68.3	155.3 x 68.3/68.3	155.3 x 68.3	122/123.2 x 58/59.2	122/123.2 x 58/59.2

2344801 Th. 20.8	2347402 Th. 20.3	2355001 Th. 17.3	2355081 Th. 17.3	2362303 Th. 17.4	2362381 Th. 17.4	2373001 Th. 17.3
23448 208 0 5	23474 203 0 5	23550 173 0 5	23550 173 0 5 epad	23623 174 2 5	23623 174 2 5 epad	23730 173 0 5
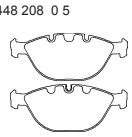	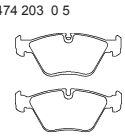	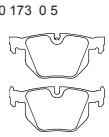	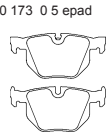	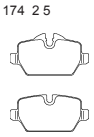		
193 x 79	155.3/156.3 x 63.9/63.9	123 x 57.9	123 x 57.9	95.4 x 51.9/45	95.4 x 51.9/45	139.5 x 67

2373007 Th. 17.1	2373081 Th. 17.3	2373101 Th. 16.9	2373201 Th. 17.3	2373281 Th. 17.3	2379101 Th. 20.8	2379181 Th. 20.8
23730 171 0 5	23730 173 0 5 epad	23731 169 0 5	23732 173 0 5	23732 173 0 5 epad	23791 208 0 5	23791 208 0 5 epad
139.5 x 67	139.5 x 67	139.7 x 67.1	121.8/121.8 x 56.8/57.8	121.8/121.8 x 56.8/57.8	193.2 x 79.2	193.2 x 79.2

2379301 Th. 20.3	2379381 Th. 20.3	2379401 Th. 20.3	2379481 Th. 20.3	2391503 Th. 17.8	2392701 Th. 17.3	2392781 Th. 17.3
23793 203 0 5	23793 203 0 5 epad	23794 203 0 5	23794 203 0 5 epad	23915 178 1 5	23927 173 0 5	23927 173 0 5 epad
155.1/154.6 x 63.9/63.9	155.1/154.6 x 63.9/63.9	155.1/154.6 x 63.9/63.9	155.1/154.6 x 63.9/63.9	131.6/131.6 x 53.5/65.2	123 x 48.1/51	123/123 x 51/48.1

2393501 Th. 17.8	2393581 Th. 17.8	2409601 Th. 20.3	2409681 Th. 20.3	2417001 Th. 19.7	2417081 Th. 19.7	2417201 Th. 19.7
23935 178 0 5	23935 178 0 5 epad	24096 203 0 5	24096 203 0 5 epad	24170 197 0 5	24170 197 0 5 epad	24172 197 0 5
150.3/149.3 x 57.2/57.2	150.3/149.3 x 57.2/57.2	155.3/154.8 x 63.9	155.3/154.8 x 63.9	171.3/170.3 x 76.8	171.3/170.3 x 76.8	192.9 x 79

BMW

2431501 Th. 16.9	2431601 Th. 17	2432801 Th. 20.8	2443601 Th. 19.9	2445801 Th. 17.1	2452401 Th. 19.4	2455901 Th. 18
24315 169 0 4	24316 170 0 4	24328 208 0 5	24436 199 0 5	24458 171 0 5	24524 194 0 4	24559 180 1 5
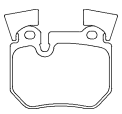	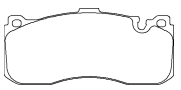	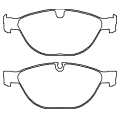	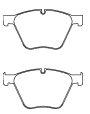	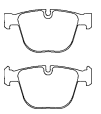	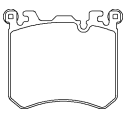	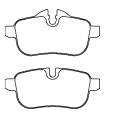
87 x 76.2	164.8 x 73.5	193 x 78.9	192.8/192.2 x 96.5	139.7 x 67.8	135 x 113.8	106 x 51.6/45.2

2455902 Th. 18	2456101 Th. 18	2456181 Th. 18	2468801 /19.2	2468881 /19.2	2469701 /19.3	2469781 /19.3
24559 180 1 5	24561 180 1 5	24561 180 1 5 epad	24688 192 0 5	24688 192 0 5 epad	24697 193 0 5	24697 193 0 5 epad
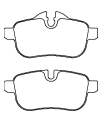	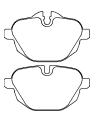	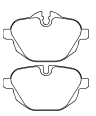	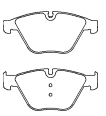	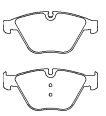	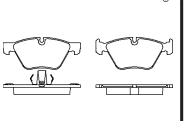	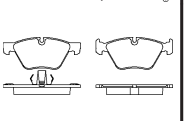
106 x 51.6/45.2	106 x 62.4/56	106 x 62.4/56	155/155.3 x 68.4/68.1	155/155.3 x 68.4/68.1	155.1/154.6 x 63.9/63.7	155.1/154.6 x 63.9/63.7

2470301 Th. 18	2470381 Th. 18	2501401	2502902 Th. 17	2504501 Th. 19.3	2504581 Th. 19.3	2513301 Th. 20.4
24703 180 1 5	24703 180 1 5 epad	25014 183 0 5	25029 170 1 4	25045 193 0 5	25045 193 0 5 epad	25133 204 0 4
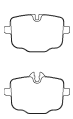	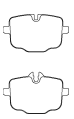	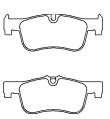	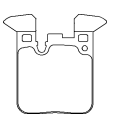	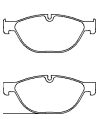	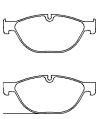	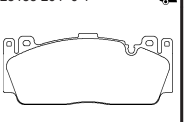
116 x 65.6/72.6	116 x 65.6/72.6	155.7/156.7 x 57.9/59.9	71.9 x 87.9	191.9/192.8 x 79.4	191.9/192.8 x 79.4	207.6 x 86.7

2519901 Th. 19.2	2530701 Th. 17.2	2550601 Th. 18.2	2551401 Th. 18.3
25199 192 0 5	25307 172 0 5	25506 182 0 5	25514 183 0 5
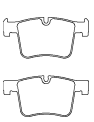	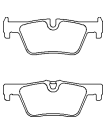	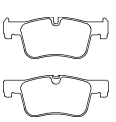	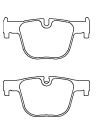
148.2 x 69.9	123 x 46.4/45.1	155.7 x 61.6	123.7/123 x 59.1/57.2

BMW (BRILLIANCE)

2167703 Th. 20.3	2167781 Th. 20.3	2169103 Th. 17.3	2169181 Th. 17.3	2193402 Th. 17.3	2193481 Th. 17.3	2328702 Th. 17.8
21677 203 0 5	21677 203 0 5 epad	21691 173 0 5	21691 173 0 5 epad	21934 173 0 5	21934 173 0 5 epad	23287 178 0 5
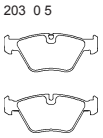	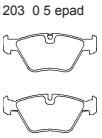	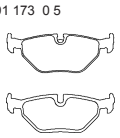	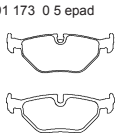	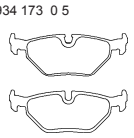	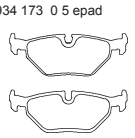	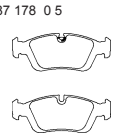
155.3 x 63.9	155.3 x 63.9	121.8/122 x 45/45	121.8/122 x 45/45	123 x 44.8	123 x 44.8	151.3/150.3 x 57.7/57.7

2328781 Th. 17.8	2331211 Th. 20.3	2331282 Th. 20.3	2331301 Th. 20.3	2331381 Th. 20.3	2355001 Th. 17.3	2355081 Th. 17.3
23287 178 0 5 epad	23312 203 9 5 T4165	23312 203 9 5 epad	23313 203 0 5	23313 203 0 5 epad	23550 173 0 5	23550 173 0 5 epad
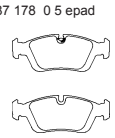	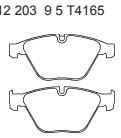	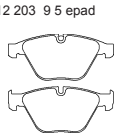	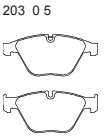	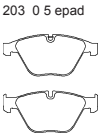	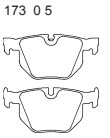	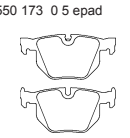
151.3/150.3 x 57.7/57.7	155.3/155.3 x 68.3/68.3	155.3/155.3 x 68.3/68.3	155.3 x 68.3/68.3	155.3 x 68.3/68.3	123 x 57.9	123 x 57.9

2362303 Th. 17.4	2362381 Th. 17.4	2373001 Th. 17.3	2373081 Th. 17.3	2373201 Th. 17.3	2373281 Th. 17.3	2379401 Th. 20.3
23623 174 2 5	23623 174 2 5 epad	23730 173 0 5	23730 173 0 5 epad	23732 173 0 5	23732 173 0 5 epad	23794 203 0 5
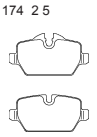						
95.4 x 51.9/45	95.4 x 51.9/45	139.5 x 67	139.5 x 67	121.8/121.8 x 56.8/57.8	121.8/121.8 x 56.8/57.8	155.1/154.6 x 63.9/63.9

2379481 Th. 20.3	2392701 Th. 17.3	2392781 Th. 17.3	2393501 Th. 17.8	2393581 Th. 17.8	2409601 Th. 20.3	2409681 Th. 20.3
23794 203 0 5 epad	23927 173 0 5	23927 173 0 5 epad	23935 178 0 5	23935 178 0 5 epad	24096 203 0 5	24096 203 0 5 epad
155.1/154.6 x 63.9/63.9	123 x 48.1/51	123/123 x 51/48.1	150.3/149.3 x 57.2/57.2	150.3/149.3 x 57.2/57.2	155.3/154.8 x 63.9	155.3/154.8 x 63.9

BMW (BRILLIANCE)

2456101 Th. 18
24561 180 1 5
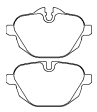
106 x 62.4/56

2456181 Th. 18
24561 180 1 5 epad
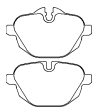
106 x 62.4/56

2469701 /19.3
24697 193 0 5
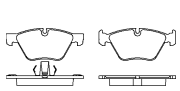
155.1/154.6 x 63.9/63.7

2469781 /19.3
24697 193 0 5 epad
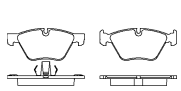
155.1/154.6 x 63.9/63.7

2502902 Th. 17
25029 170 1 4
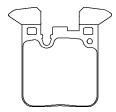
71.9 x 87.9

2519901 Th. 19.2
25199 192 0 5
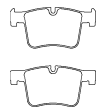
148.2 x 69.9

2530701 Th. 17.2
25307 172 0 5
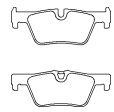
123 x 46.4/45.1

2550601 Th. 18.2
25506 182 0 5
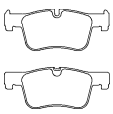
155.7 x 61.6

2551401 Th. 18.3
25514 183 0 5
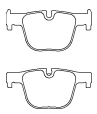
123.7/123 x 59.1/57.2

BUGATTI

2411601 Th. 16.3
24116 163 0 5
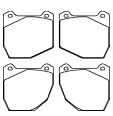
110 x 102.5

2412001 Th. 16.3
24120 163 0 4
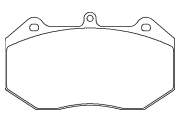
167.6 x 95.5

BUICK

2323401 Th. 16.9
23234 169 0 5
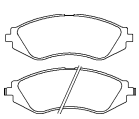
143.1 x 51.3

2335801 Th. 18
23358 180 0 5
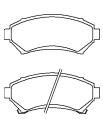
148.1 x 61.1

2336101 Th. 15
23361 150 0 5
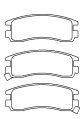
107.8 x 41

2407101 Th. 14.6
24071 146 0 4

104.6 x 38.9

2441201 Th. 19.1
24412 191 1 5
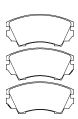
142.1 x 66.7

2441501 Th. 19.1
24415 191 1 5
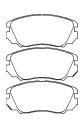
131.5 x 59.7

2442101 Th. 17.3
24421 173 1 5
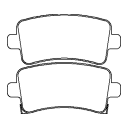
106.4 x 47.1

2485901 Th. 13.9
24859 139 0 5
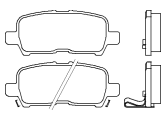
108.8 x 42.9

BUICK (SGM)

2481501 Th. 14.5
24815 145 0 5
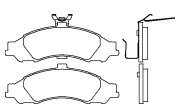
183.6 x 64

2485901 Th. 13.9
24859 139 0 5
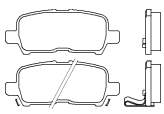
108.8 x 42.9

2503101 Th. 18.8
25031 188 1 5
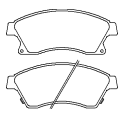
148 x 60.3

2503181 Th. 18.8
25031 188 1 5
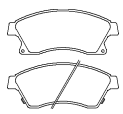
148 x 60.3

2509601 Th. 16.2
25096 162 1 5
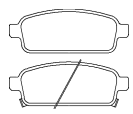
116.6 x 42.6

2509681 Th. 16.2
25096 162 1 5 epad
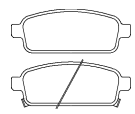
116.6 x 42.6

BYD

2359201 Th. 15
23592 150 0 4
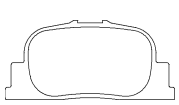
82.6 x 38.5

2390401 Th. 16.6
23904 166 0 5
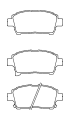
116.6/116.6 x 51.4/54.4

2443501 Th. 14.8
24435 148 1 5
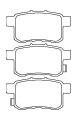
93.7 x 46.6

CADILLAC

2022401 Th. 20.9
20224 209 0 5
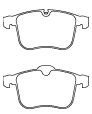
155.1/156.4 x 73.1/77.6

2314301 Th. 14.3
23143 143 0 4
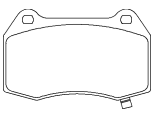
119.8 x 73.6

2332501 Th. 15
23325 150 0 4
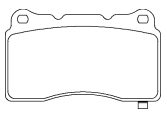
131.8 x 77.5

2332502 Th. 16
23325 160 0 4
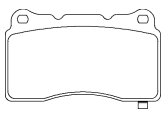
131.8 x 77.5

2340404 Th. 20.4
23404 204 1 5
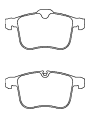
155.1/156.4 x 73.1/77.6

2373807 Th. 20.6
23738 206 0 5
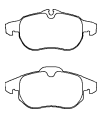
155.3/156.5 x 69.6/70.7

2413701 Th. 16.7
24137 167 0 5
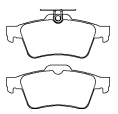
123.2 x 51.9

2413781 Th. 16.7
24137 167 0 5 epad
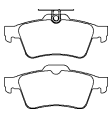
123.2 x 51.9

2419401 Th. 15.3
24194 153 0 5
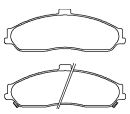
183.6 x 63.1

2419701 Th. 16.5
24197 168 0 5
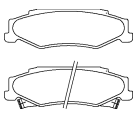
121.7 x 37

2426601 Th. 16.4
24266 157 0 5
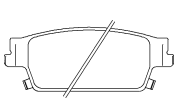
122.7 x 45.4

2426801 Th. 15
24268 139 0 4
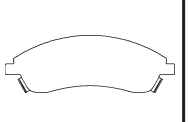
180.8 x 59.2

2427901 Th. 14.5
24279 145 1 4
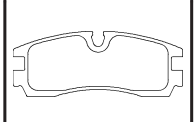
107.7 x 41.1

2430301 Th. 14.1
24303 141 0 4
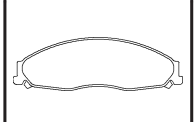
182.5 x 56.7

2430401 Th. 15.4
24304 154 0 5
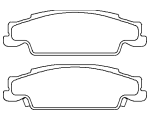
122.5 x 38.2

2454601 Th. 17.2
24546 172 0 5
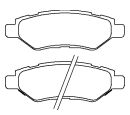
137.6 x 46

2461501 Th. 16.9
24615 169 0 5
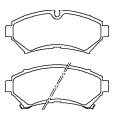
147.9 x 61.1

2475001 Th. 16.7
24750 167 0 5
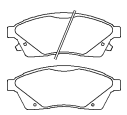
176.2 x 68.3

2493701 Th. 16
24937 161 1 5
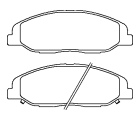
175.7 x 59.9

2494001 Th. 17.2
24940 172 1 5
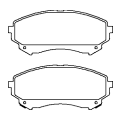
161.9 x 69.8

2503401 Th. 18.8
25034 188 1 5
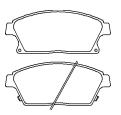
148 x 61.1

2503481 Th. 18.8
25034 188 1 5 epad
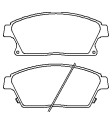
148 x 61.1

CADILLAC (SGM)

2430301 Th. 14.1
24303 141 0 4
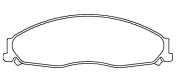
182.5 x 56.7

2430401 Th. 15.4
24304 154 0 5
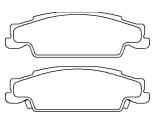
122.5 x 38.2

CARBODIES

2116002 Th. 18
21160 180 0 5
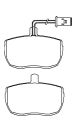
104.9 x 74.7

2145902 Th. 18.5
21459 185 0 5
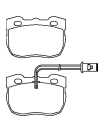
104.9 x 72.4

CHANGFENG

2136301 Th. 15.7
21363 157 0 5
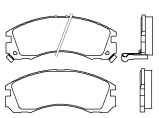
149.8 x 58.6

2137001 Th. 15.7
21370 157 1 4
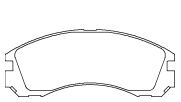
149.9 x 58.9

2187503 Th. 15.8
21875 158 0 5
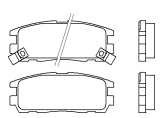
109.5 x 42.6

2329002 Th. 15.5
23290 155 1 4
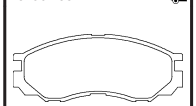
137.8 x 55

CHERY

2370201 Th. 15.8
23702 158 0 4

92.9 x 37.8

CHEVROLET

2054701 Th. 16.8
20547 168 0 5
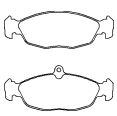
140.1/141.3 x 58.3/48.2

2154302 Th. 16.5
21543 165 0 5
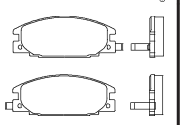
127.3 x 49.3

2186201 Th. 18.3
21862 183 0 5
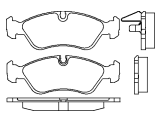
156.3 x 52.5

2190701 Th. 15.4
21907 154 0 5
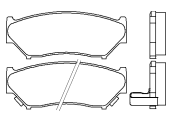
116.5 x 45.5

2306302 Th. 17.3
23063 173 0 5
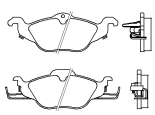
177.6/160 x 62.1/62.8

2314301 Th. 14.3
23143 143 0 4
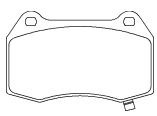
119.8 x 73.6

2322501 Th. 17
23225 170 1 5
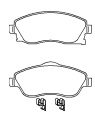
131.5/131.5 x 51.4/55.4

2323401 Th. 16.9
23234 169 0 5
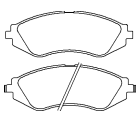
143.1 x 51.3

2323701 Th. 14.5
23237 145 1 4
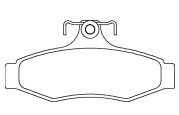
114 x 54.9

2324102 Th. 16.5
23241 165 0 4
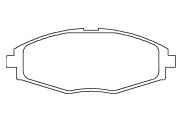
126.9 x 47.9

2325803 Th. 16.9
23258 169 2 5
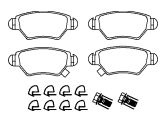
104.9 x 42.7

2332502 Th. 16
23325 160 0 4
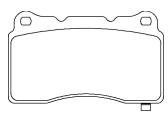
131.8 x 77.5

2335801 Th. 18
23358 180 0 5
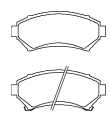
148.1 x 61.1

2336101 Th. 15
23361 150 0 5
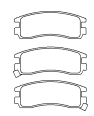
107.8 x 41

2340404 Th. 20.4
23404 204 1 5
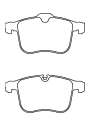
155.1/156.4 x 73.1/77.6

2341702 Th. 15.2
23417 152 1 4
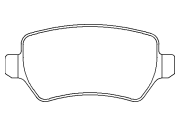
95.3 x 42.8

2341703 Th. 15.2
23417 152 1 5
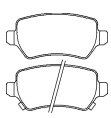
95.5 x 42.8

2341781 Th. 15.2
23417 152 1 4 epad
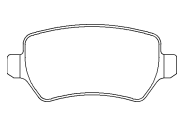
95.3 x 42.8

2350701 Th. 15
23507 150 0 5
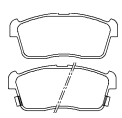
108.6 x 45.4

2360501 Th. 15.5
23605 155 1 5
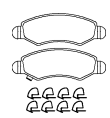
130.9 x 44.5

2366301 Th. 15.2
23663 152 0 4
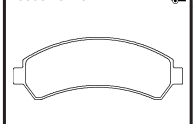
167 x 61

2366401 Th. 14.9
23664 148 0 5
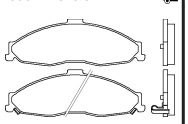
182.7 x 61.4

2367701 Th. 15.5
23677 155 0 5

142.7 x 46.8

2373807 Th. 20.6
23738 206 0 5
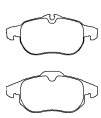
155.3/156.5 x 69.6/70.7

2383201 Th. 19.6
23832 196 0 5
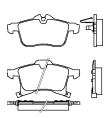
156.3/155.1 x 76/69.6

2383281 Th. 19.6
23832 196 0 5 epad
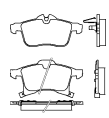
156.3/155.1 x 76/69.6

2386501 Th. 16.4
23865 164 0 5
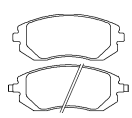
137.1 x 56.8

2391202 Th. 20.4
23912 204 0 5

156.3/155.3 x 72.9

2397401 Th. 17.8
23974 178 0 4
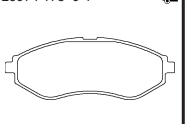
133.2 x 48.9

2397406 Th. 17.8
23974 178 0 5
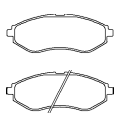
133.2 x 48.9

2397501 Th. 16.8
23975 168 0 5
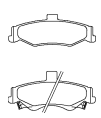
121.4 x 44.2/54

2397601 Th. 16
23976 160 0 4
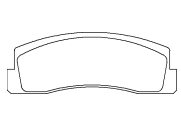
126.1 x 45

2399401 Th. 14.8
23994 148 0 4
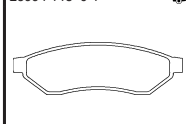
121.2 x 37.3

2404001 Th. 14.4
24040 144 0 5
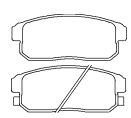
105.7 x 43

2406201 Th. 17.6
24062 176 0 5
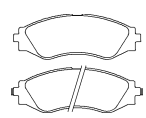
143.1 x 51.1

2407101 Th. 14.6
24071 146 0 4
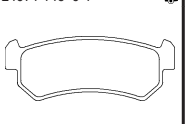
104.6 x 38.9

2413701 Th. 16.7
24137 167 0 5
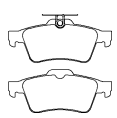
123.2 x 51.9

2413781 Th. 16.7
24137 167 0 5 epad
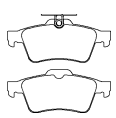
123.2 x 51.9

2415501 Th. 20.6
24155 206 0 5
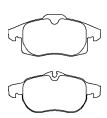
155.3/156.5 x 69.6/70.7

2419401 Th. 15.3
24194 153 0 5

183.6 x 63.1

2419701 Th. 16.5
24197 168 0 5

121.7 x 37

2437001 Th. 16.1
24370 161 0 5

167.3 x 54.3

2441201 Th. 19.1
24412 191 1 5

142.1 x 66.7

2441501 Th. 19.1
24415 191 1 5

131.5 x 59.7

2442101 Th. 17.3
24421 173 1 5

106.4 x 47.1

2442102 Th. 17.3
24421 173 2 5

106.4 x 47.1

2444501 Th. 16.9
24445 169 0 5

137.7 x 47

2444801 Th. 16.8
24448 168 1 4

177 x 62.6

2449801 Th. 15.4
24498 154 0 5

110.9 x 45.7

CHEVROLET

2451001 Th. 16.9	2454601 Th. 17.2	2471701 Th. 17.3	2474401 Th. 14.7	2479301 Th. 19.5	2481701 Th. 17	2486401 Th. 17
24510 169 0 5	24546 172 0 5	24717 173 0 5	24744 147 0 5	24793 195 0 5	24817 170 1 4	24864 170 0 5
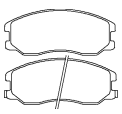	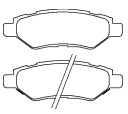	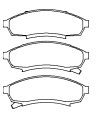	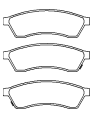	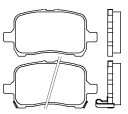	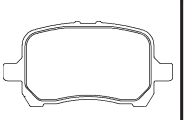	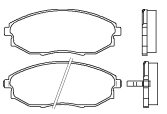
149.4 x 62	137.6 x 46	140.3 x 49.1	121.1 x 39	118.8 x 59.5	118.8 x 59.7	144 x 56.5

2503101 Th. 18.8	2503181 Th. 18.8	2503401 Th. 18.8	2503481 Th. 18.8	2509601 Th. 16.2	2509602 Th. 16.2	2509681 Th. 16.2
25031 188 1 5	25031 188 1 5	25034 188 1 5	25034 188 1 5 epad	25096 162 1 5	25096 162 9 5	25096 162 1 5 epad
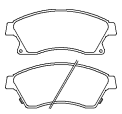	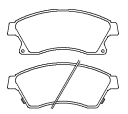	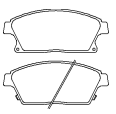	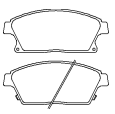	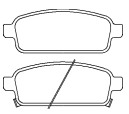	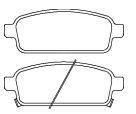	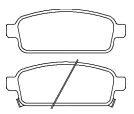
148 x 60.3	148 x 60.3	148 x 61.1	148 x 61.1	116.6 x 42.6	116.6 x 42.6	116.6 x 42.6

2510601 Th. 15.9	2523201 Th. 14.4	2526801 Th. 17.9	2530401 Th. 14.2
25106 15,9 0 5	25232 144 0 4	25268 179 0 5	25304 140 0 5
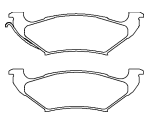		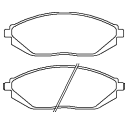	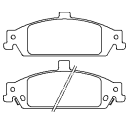
155.7 x 49.4	104 x 38.8	133 x 48.8	161.2 x 57.7/62.7

CHEVROLET (SGM)

2366301 Th. 15.2	2397401 Th. 17.8	2397406 Th. 17.8	2399401 Th. 14.8	2406201 Th. 17.6	2449801 Th. 15.4	2451001 Th. 16.9
23663 152 0 4	23974 178 0 4	23974 178 0 5	23994 148 0 4	24062 176 0 5	24498 154 0 5	24510 169 0 5
		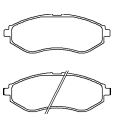		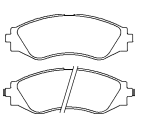	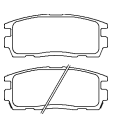	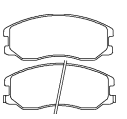
167 x 61	133.2 x 48.9	133.2 x 48.9	121.2 x 37.3	143.1 x 51.1	110.9 x 45.7	149.4 x 62

2474401 Th. 14.7	2503101 Th. 18.8	2503181 Th. 18.8	2509601 Th. 16.2	2509681 Th. 16.2
24744 147 0 5	25031 188 1 5	25031 188 1 5	25096 162 1 5	25096 162 1 5 epad
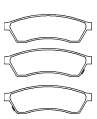	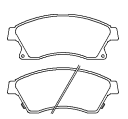	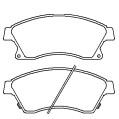	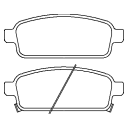	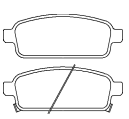
121.1 x 39	148 x 60.3	148 x 60.3	116.6 x 42.6	116.6 x 42.6

CHRYSLER

2130504 Th. 15.5	2130581 Th. 15.5	2148401 Th. 20.8	2164701 Th. 16	2167001 Th. 20.3	2167081 Th. 20.3	2170602 Th. 15.5
21305 155 0 4 T4250	21305 155 0 4 epad	21484 208 0 5	21647 160 0 5	21670 203 0 5	21670 203 0 5 epad	21706 155 0 5
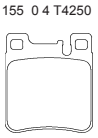	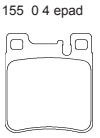	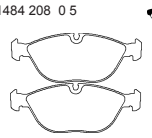	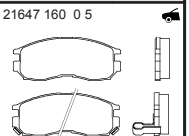	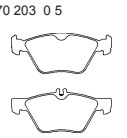	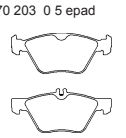	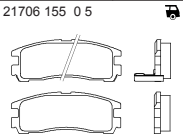
61.8 x 69.6	61.8 x 69.6	194.5 x 73.5	127.8 x 52.1	156.4/155.2 x 63.5/69.3	156.2/156.3 x 63.5/69.3	107.7 x 41

2191903 Th. 15.7	2304301 Th. 18.6	2331801 Th. 15.9	2353202 Th. 20	2356102 Th. 17	2358202 Th. 15.5	2358403 Th. 16
21919 157 0 4 T4271	23043 186 0 5	23318 159 0 5	23532 200 0 5	23561 170 0 5	23582 155 1 5	23584 160 1 4 T4361
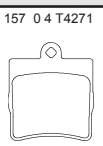	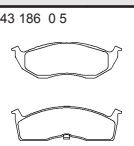	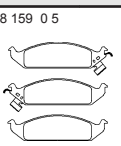				
63.6 x 72.9	165.1/164.6 x 54.2/51.6	177 x 46.7	124.2 x 64.9	133.8 x 39.9	111.3/91 x 45/45	145.1 x 55.1

2363801 Th. 17.5	2364001 Th. 18	2370802 Th. 19	2370881 Th. 19	2371104 Th. 19.4	2371401 Th. 15.5	2371481 Th. 15.5
23638 175 0 5	23640 180 0 5	23708 182 1 5	23708 182 1 5 epad	23711 194 1 5	23714 155 1 4	23714 155 1 4 epad
146.7 x 59.7	172.4 x 65.6	137 x 57.4	137 x 57.4	150.8 x 57.4	94.8 x 42.9	94.8 x 42.9

CHRYSLER

2374001 Th. 15.5	2380701 Th. 18.5	2395101 Th. 20.5	2401401 Th. 15.4	2403601 Th. 16	2407501 Th. 17	2407601 Th. 14.8
23740 155 0 5	23807 185 0 5	23951 205 0 5	24014 154 1 5	24036 160 0 5	24075 170 0 4	24076 148 0 4
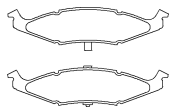	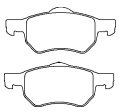	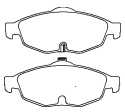	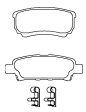		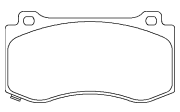	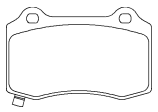
165.1 x 38.1	172.1 x 72.3 x 72.5/69.3	155.5 x 62	85.4/105.8 x 39.8/35.2	155.4 x 50.8	141.8 x 76	109.8 x 69.2

2416301 Th. 17.8	2416401 Th. 17.8	2416601 Th. 18.8	2458301 Th. 17	2460401 Th. 18.5	2472701 Th. 20	2482201 Th. 17
24163 178 0 4	24164 178 0 4	24166 188 0 4	24583 170 1 4	24604 185 1 5	24727 200 0 5	24822 170 1 4
	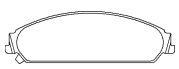	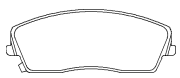		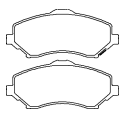	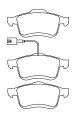	
101.2 x 57.5	183.4 x 54.9	150.4 x 56.4	145.1 x 55	146.6 x 63.4	156.3/155.1 x 71.5/69	116.7 x 52.7

2495301 Th. 16.5	2510801 Th. 15.9	2532301 Th. 17.3	2537601 Th. 17.6	2537801 Th. 18.1
24953 186 0 5	25109 159 0 5	25323 173 0 5	25376 176 1 5	25378 181 1 5
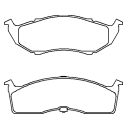	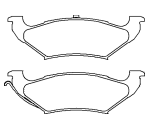	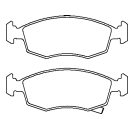	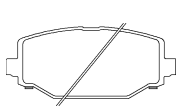	
164.1/164.6 x 54.2/51.6	155.7 x 49.4	149.3 x 52.5	130 x 54.7	183 x 63.2

CHRYSLER (BBDC)

2416301 Th. 17.8	2416401 Th. 17.8	2452301 Th. 16.4	2458301 Th. 17
24163 178 0 4	24164 178 0 4	24523 164 0 5	24583 170 1 4
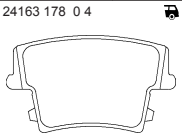	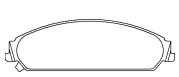	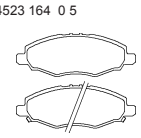	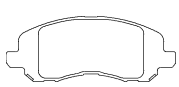
101.2 x 57.5	183.4 x 54.9	146.8 x 53.2	145.1 x 55

CITROËN

2016203 Th. 15.4	2026101 Th. 19.3	2038902 Th. 16	2090506 Th. 18	2090602 Th. 18	2090603 Th. 18	2096110 Th. 17.4
20162 154 0 4	20261 193 1 5	20389 160 0 4	20905 180 0 5	20906 180 0 5	20906 180 2 5	20961 174 1 4
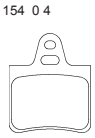	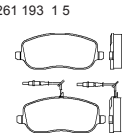	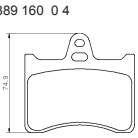	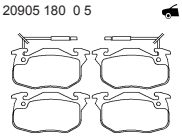	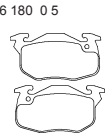	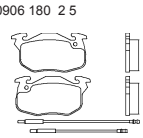	
53.8 x 64.9	146.6 x 59.9	83 x 74.9	105 x 54.3	105 x 54.3	105 x 54.3	87 x 53

2097401 Th. 11	2098901 Th. 17.7	2121102 Th. 18.7	2126702 Th. 17.6	2127501 Th. 16.9	2136301 Th. 15.7	2137001 Th. 15.7
20974 110 0 4	20989 177 0 5	21211 187 0 5	21267 176 0 5	21275 169 1 5 T4067	21363 157 0 5	21370 157 1 4
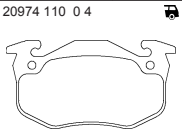	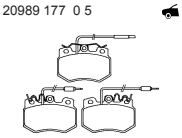	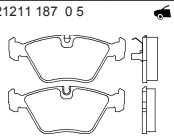	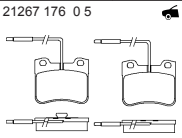	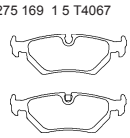	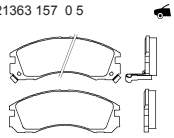	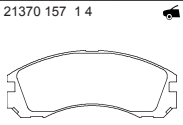
105.2 x 54.8	89.9 x 62.9	156.3 x 63.9	71.9 x 60.7	123 x 43	149.8 x 58.6	149.9 x 58.9

2138104 Th. 14	2143001 Th. 17.3	2150401 Th. 17	2163102 Th. 17	2163201 Th. 16	2167403 Th. 19.3	2179701 Th. 19.7
21381 140 0 4	21430 173 0 5	21504 170 1 5	21631 170 1 4	21632 160 1 4	21674 193 1 5	21797 197 2 5
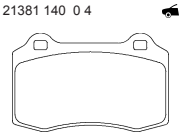	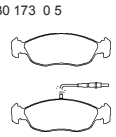	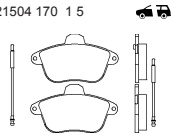				
109.8 x 69.3	141.3 x 47.2	130.8 x 73.1	130.9 x 60.6	131.2 x 66.8	129.8 x 56.5	145 x 60.9

2179901 Th. 19.7	2180101 Th. 19.3	2182702 Th. 17.3	2185701 Th. 17	2198004 Th. 18	2304201 Th. 19	2312401 Th. 19.3
21799 197 2 5	21801 193 2 5	21827 173 0 5	21857 170 0 5	21980 180 2 5	23042 190 1 4	23124 193 1 5
160 x 63.1	129.9 x 59.5	140.1/141.3 x 47.3/47.3	72.5 x 60.6	130.9 x 47.3	139.6 x 68.6	129.9 x 56

CITROËN

2313503 Th. 18	2314601 Th. 17	2327301 Th. 18	2327601 Th. 17.5	2327701 Th. 17.7	2330501 Th. 15.4	2333201 Th. 18
23135 180 1 5	23146 170 1 4	23273 180 1 4	23276 175 1 4	23277 177 1 4	23305 154 0 4	23332 180 1 5
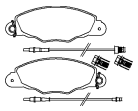	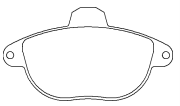				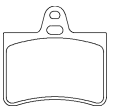	
169.1 x 60.9	130.9 x 71.4	168.9 x 60.7	149 x 48.4	148.7 x 57.9	72.9 x 70.5	131 x 52.5

2334602 Th. 19.3	2339602 Th. 18	2340702 Th. 19.3	2340902 Th. 19.3	2355402 Th. 17.2	2355481 Th. 17.2	2357501 Th. 16
23346 193 1 4	23396 180 1 4	23407 193 1 5	23409 193 1 5	23554 172 1 4	23554 172 1 4 epad	23575 160 0 5
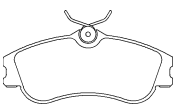		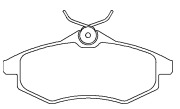	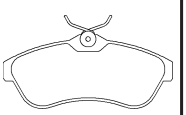			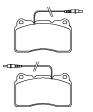
129.7 x 56	130.9 x 52.4	122.8 x 52.8	128.8 x 55.9	87 x 53	87 x 53	131.6 x 77.2

2358202 Th. 15.5	2358401 Th. 16	2358901 Th. 19	2359703 Th. 18	2360001 Th. 19	2360201 Th. 19.7	2360301 Th. 19.7
23582 155 1 5	23584 160 1 4 T4047	23589 190 0 5	23597 180 1 5	23600 190 1 4	23602 197 2 5	23603 197 2 5
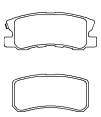		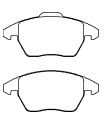	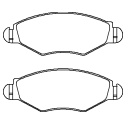		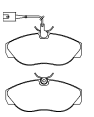	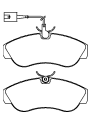
111.3/91 x 45/45	145.1 x 55	156.5/155.3 x 71.3/66	131.2 x 47.3	136.9 x 57.4	145 x 62.2	160.3 x 64.4

2370601 Th. 17.8	2391701 Th. 19.1	2391901 Th. 19.1	2392101 Th. 20.1	2395401 Th. 19	2395901 Th. 17.5	2397903 Th. 17.8
23706 178 1 5	23917 191 1 5	23919 191 1 5	23921 201 1 4	23954 190 1 4	23959 175 1 4	23979 178 2 5
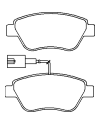	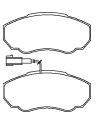	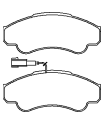				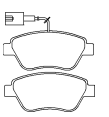
122.8 x 53.3	140.5 x 65.6	164.5 x 68.7	109.7 x 49.9	137 x 51.6	122.8 x 47.2	122.8 x 53.3

2410101 Th. 19	2413301 Th. 17.7	2413303 Th. 18.3	2413501 Th. 17.8	2413701 Th. 16.7	2413781 Th. 16.7	2415001 Th. 17.6
24101 190 1 4	24133 177 1 5	24133 183 1 5	24135 178 1 4	24137 167 0 5	24137 167 0 5 epad	24150 176 1 4
	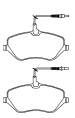			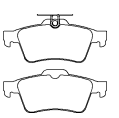	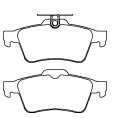	
136.8 x 51.1	162.4 x 79.1	162.3 x 79.1	86.2 x 57	123.2 x 51.9	123.2 x 51.9	94.8 x 46.8

2433201 /18.8	2442302 Th. 14.7	2446201 Th. 16.7	2446501 Th. 18.8	2446601 Th. 19	2446602 Th. 19	2446701 Th. 19
24332 179 1 5	24423 147 0 5	24462 167 1 4	24465 188 1 4	24466 190 1 5	24466 190 2 5	24467 190 1 5
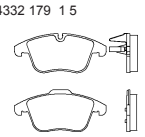	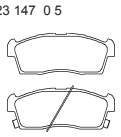	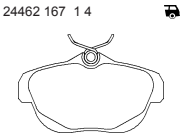		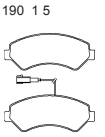		
155.1 x 66.4/72.2	108.4 x 41.8	113.8 x 62.7	137.1 x 48.8	169.1 x 69.1	169.1 x 69.1	169.1 x 69.1

2446703 Th. 19	2446801 Th. 19	2446802 Th. 19	2446901 Th. 19	2446902 Th. 19	2453801 /18.8	2454001 Th. 16.4
24467 190 3 5	24468 190 1 5	24468 190 2 5	24469 190 1 5	24469 190 2 5	24538 188 0 5	24540 164 1 4
169.1 x 69.1	169.1 x 61.6	169.1 x 61.6	169.1 x 61.6	169.1 x 61.6	155.3 x 64.7/57.7	102.5 x 48.4

2455701 /19	2455801 /18	2457801 Th. 16.6	2459501 Th. 18.3	2473701 Th. 18	2476501 Th. 16.6	2483901 Th. 19.4
24557 190 0 5	24558 180 0 5	24578 166 1 4	24595 183 1 5	24737 176 1 4	24765 166 1 4	24839 194 1 5
155.3 x 66.7/71.9	155.2 x 66.7/71.6	113.5 x 58.2	162.2 x 66.8	94.5 x 46.8	86.8 x 53	162.5 x 63.7

2488301 Th. 18	2492201 Th. 17.3	2506901 Th. 17	2507001 Th. 17	2509401 Th. 19	2522001 Th. 18.5	2525001 Th. 18.7
24883 180 1 4	24922 173 1 4	25069 170 1 5	25070 170 0 5	25094 190 1 4	25220 185 1 5	25250 187 1 5
136.7 x 59.2	103.7 x 55.9	179.9 x 74.9	179.9 x 74.9	136.8 x 56.9	129 x 53/61	132.8 x 59.9/52.6

CITROËN

2568801 Th. 14.3	2582701 Th. 17.3	2583601 Th. 17	2583901 Th. 17.5
25688 143 0 5	25827 173 1 5	25836 170 0 5	25839 175 1 5
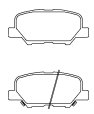	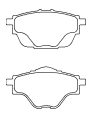	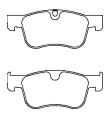	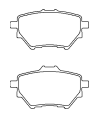
101.4 x 44.3	105.9 x 51.8/55.3	155.1 x 61.8/61.9	98.9 x 50/53.4

CITROËN (DF-PSA)

2097401 Th. 11	2334602 Th. 19.3	2355402 Th. 17.2	2355481 Th. 17.2	2359703 Th. 18	2360001 Th. 19	2395401 Th. 19
20974 110 0 4	23346 193 1 4	23554 172 1 4	23554 172 1 4 epad	23597 180 1 5	23600 190 1 4	23954 190 1 4
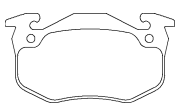	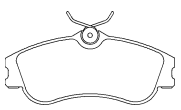			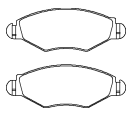		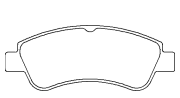
105.2 x 54.8	129.7 x 56	87 x 53	87 x 53	131.2 x 47.3	136.9 x 57.4	137 x 51.6

2410101 Th. 19	2473701 Th. 18
24101 190 1 4	24737 176 1 4
	
136.8 x 51.1	94.5 x 46.8

DACIA

2014003 Th. 14	2049401 Th. 14	2146304 Th. 18.2	2146306 Th. 18.2	2397301 Th. 17.3	2467301 Th. 18	2491401 Th. 18
20140 140 0 5	20494 140 0 5	21463 182 3 4	21463 182 1 4	23973 173 1 4	24673 180 0 5	24914 180 0 5
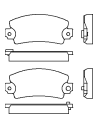	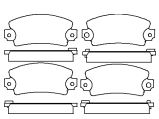	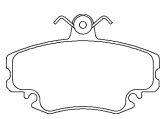	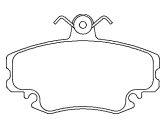	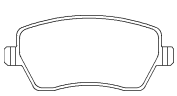	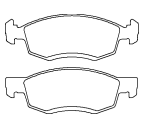	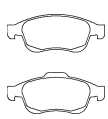
108.9 x 42.4	108.9 x 47	99.9 x 64.8	99.9 x 64.8	116.3 x 51.9	151.3/150.1 x 52.5	155.3 x 59.4/64.7

2570201 Th. 18	2573801 Th. 18
25702 180 0 5	25738 180 0 5
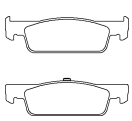	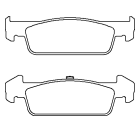
140 x 41.8/40	140.2 x 41.3/43.8

DAEWOO

2054701 Th. 16.8	2138802 Th. 18.3	2172502 Th. 15.6	2186201 Th. 18.3	2306101 Th. 14	2323001 Th. 15.8	2323101 Th. 15.8
20547 168 0 5	21388 183 2 5	21725 156 0 5	21862 183 0 5	23061 140 0 4	23230 158 0 5	23231 158 0 5
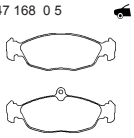	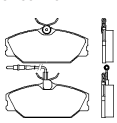	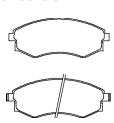	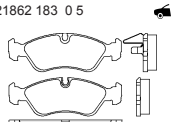	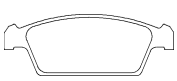	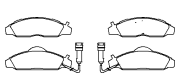	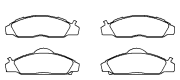
140.1/141.3 x 58.3/48.2	129.9 x 55.4	137 x 54	156.3 x 52.5	108.4 x 38.8	169.5 x 59/50	169.5 x 59/50

2323401 Th. 16.9	2323701 Th. 14.5	2324102 Th. 16.5	2324201 Th. 14.2	2356901 Th. 17	2367301 Th. 15	2397401 Th. 17.8
23234 169 0 5	23237 145 1 4	23241 165 0 4	23242 142 1 5	23569 170 0 5	23673 150 0 5	23974 178 0 4
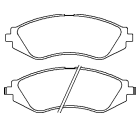	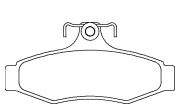	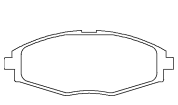	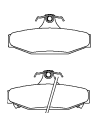	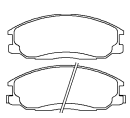	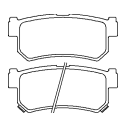	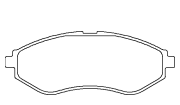
143.1 x 51.3	114 x 54.9	126.9 x 47.9	114 x 55	148.9 x 58.1	98.8 x 43.5	133.2 x 48.9

2397406 Th. 17.8	2399401 Th. 14.8	2405001 Th. 15.2	2406201 Th. 17.6	2407101 Th. 14.6	2449801 Th. 15.4	2451001 Th. 16.9
23974 178 0 5	23994 148 0 4	24050 152 0 5	24062 176 0 5	24071 146 0 4	24498 154 0 5	24510 169 0 5
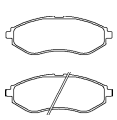	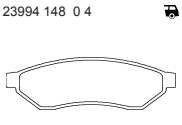		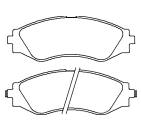			
133.2 x 48.9	121.2 x 37.3	98.7 x 43.6	143.1 x 51.1	104.6 x 38.9	110.9 x 45.7	149.4 x 62

DAIHATSU

2000801 Th. 13
20008 130 0 4

100.8 x 42.1

2078001 Th. 13.4
20780 134 0 4
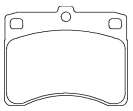
78.7 x 63.5

2165001 Th. 15
21650 150 1 4
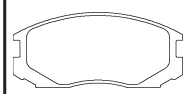
114 x 50

2171201 Th. 14
21712 140 0 4
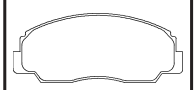
127.9 x 52.2

2195202 Th. 15.6
21952 156 0 5
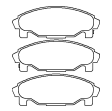
125.8 x 45.3

2196701 Th. 13.8
21967 138 0 4
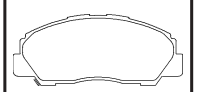
131.3 x 52.7

2349402 Th. 14
23494 140 0 5
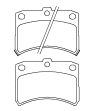
78.8 x 58.2

2349701 Th. 15.5
23497 155 0 5
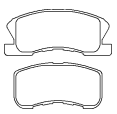
115.7 x 49.4

2350701 Th. 15
23507 150 0 5
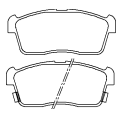
108.6 x 45.4

2378301 Th. 13.8
23783 138 0 4
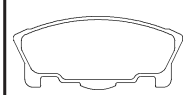
105 x 45.1

2402201 Th. 17.7
24022 177 0 5
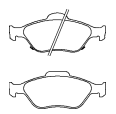
150.1/151.3 x 61/57.8

2422901 Th. 15.3
24229 153 1 5
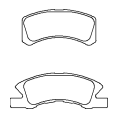
92.2/122.1 x 44.4

2428303 Th. 16.5
24283 165 1 5
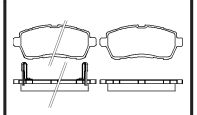
125.6 x 51.7

2434701 Th. 18.6
24347 186 0 4

122.7 x 49.8

2457401 Th. 15
24574 150 0 5

123.2 x 43.7

2470801 Th. 17.6
24708 176 0 4
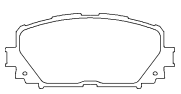
122.7 x 54.3

2526201 Th. 15.4
25262 154 1 5
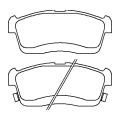
108.3 x 45.4

DAIMLER

2138102 Th. 15
21381 150 0 4
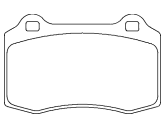
109.8 x 69.3

2312601 Th. 17.5
23126 175 0 5
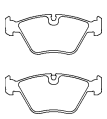
156.3 x 64

2329301 Th. 18.2
23293 182 0 5
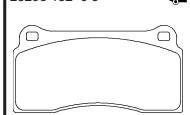
131.6 x 67.2

2448701 Th. 16
24487 166 0 5
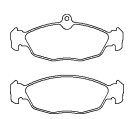
140.3 x 58/48

DALLAS

2090506 Th. 18
20905 180 0 5
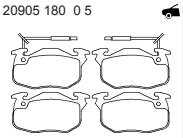
105 x 54.3

2098901 Th. 17.7
20989 177 0 5
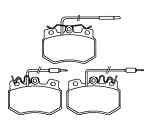
89.9 x 62.9

DODGE

2101202 Th. 14.8
21012 148 0 5
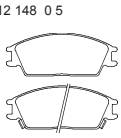
127.4 x 49

2138103 Th. 18
21381 180 0 5
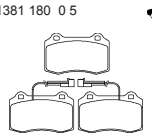
109.8 x 69.3

2304301 Th. 18.6
23043 186 0 5
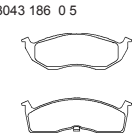
165.1/164.6 x 54.2/51.6

2314301 Th. 14.3
23143 143 0 4
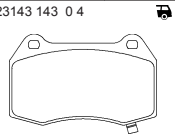
119.8 x 73.6

2331801 Th. 15.9
23318 159 0 5
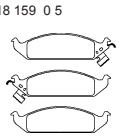
177 x 46.7

2353202 Th. 20
23532 200 0 5

124.2 x 64.9

2356102 Th. 17
23561 170 0 5
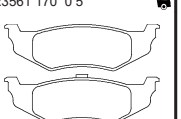
133.8 x 39.9

2358202 Th. 15.5
23582 155 1 5
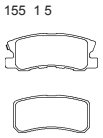
111.3/91 x 45/45

2358403 Th. 16
23584 160 1 4 T4361
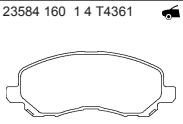
145.1 x 55.1

2363801 Th. 17.5
23638 175 0 5
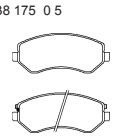
146.7 x 59.7

2364001 Th. 18
23640 180 0 5
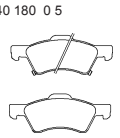
172.4 x 65.6

2368701 Th. 17.5
23687 175 0 5
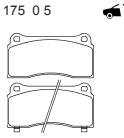
131.7 x 67

2374001 Th. 15.5
23740 155 0 5
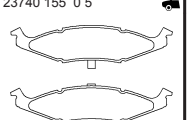
165.1 x 38.1

2401401 Th. 15.4
24014 154 1 5
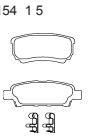
85.4/105.8 x 39.8/35.2

2403601 Th. 16
24036 160 0 5

155.4 x 50.8

2407501 Th. 17
24075 170 0 4
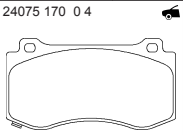
141.8 x 76

2407601 Th. 14.8
24076 148 0 4
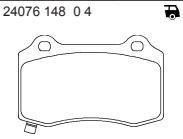
109.8 x 69.2

2416301 Th. 17.8
24163 178 0 4

101.2 x 57.5

2416401 Th. 17.8
24164 178 0 4

183.4 x 54.9

2416601 Th. 18.8
24166 188 0 4

150.4 x 56.4

2427501 Th. 16.8
24275 168 0 5

116.2 x 47.4

DODGE

2427601 Th. 14.8	2427701 Th. 16.5	2431701 Th. 17.5	2432001 Th. 15.9	2434001 /20.1	2458301 Th. 17	2459701 Th. 17.6
24276 148 0 5	24277 165 0 5	24317 175 0 5	24320 159 0 5	24340 201 0 5	24583 170 1 4	24597 176 1 5
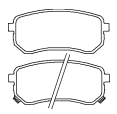	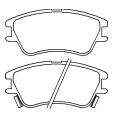	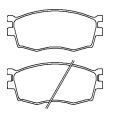	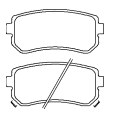	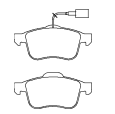	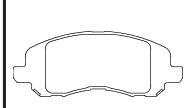	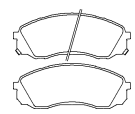
92.5 x 41	104.6 x 47.1	129.8 x 56	93.1 x 41.1	155.2/155.5 x 69/71.5	145.1 x 55	164.6 x 63.4

2459901 Th. 15.5	2460201 Th. 16	2460401 Th. 18.5	2460402 Th. 17.5	2482201 Th. 17	2495301 Th. 16.5	2510801 Th. 15.9
24599 155 1 5	24602 160 1 5	24604 185 1 5	24604 175 1 5	24822 170 1 4	24953 186 0 5	25109 159 0 5
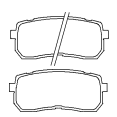	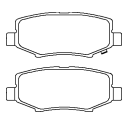	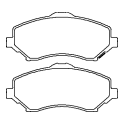	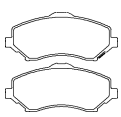		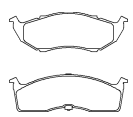	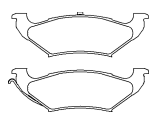
110.4 x 47.8	116.2 x 45.4	146.6 x 63.4	146.6 x 63.4	116.7 x 52.7	164.1/164.6 x 54.2/51.6	155.7 x 49.4

2513601 Th. 17	2515601 Th. 17.8	2533701 Th. 15.7	2534801 Th. 17.8	2536501 Th. 16.6	2537601 Th. 17.6	2537801 Th. 18.1
25136 170 0 5	25156 178 1 5	25337 157 1 5	25348 178 1 5	25365 166 1 5	25376 176 1 5	25378 181 1 5
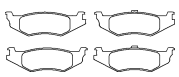	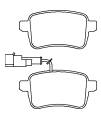	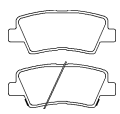	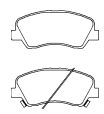	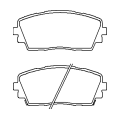	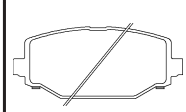	
135 x 39.9	95.5 x 48	99.7 x 40.9	132.7 x 58	111 x 47.5	130 x 54.7	183 x 63.2

DONGNAN (SOUEAST)

2187202 Th. 14.5	2337301 Th. 15	2358401 Th. 16
21872 145 0 5	23373 150 0 5	23584 160 1 4 T4047
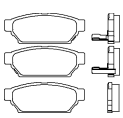	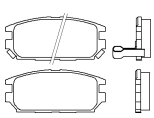	
98.9 x 37.7	107.7 x 46	145.1 x 55

DR

2066928 Th. 18	2365601 Th. 14	2366201 Th. 15
20669 180 1 4	23656 140 0 5	23662 150 1 4
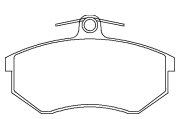	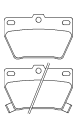	
119 x 69.5	78.3 x 54.1	106.4 x 49.9

EUNOS

2131901 Th. 13	2157101 Th. 17.1	2176603 Th. 14.8	2384504 Th. 16.5
21319 130 0 5	21571 171 1 4	21766 137 1 4	23845 154 1 5
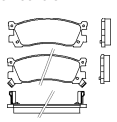	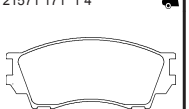	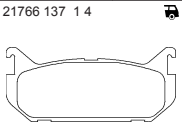	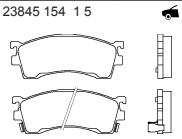
117 x 42.6	141.9 x 59.5	100 x 43.5	132 x 51.5

FAW TIANJIN

2390401 Th. 16.6
23904 166 0 5
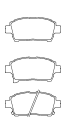
116.6/116.6 x 51.4/54.4

FENGXING (DONGFENG)

2329002 Th. 15.5
23290 155 1 4
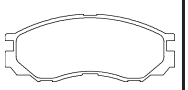
137.8 x 55

FIAT

2007304 Th. 17.3
20073 173 0 4
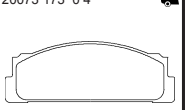
108.9 x 39

2026101 Th. 19.3
20261 193 1 5
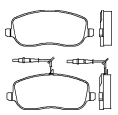
146.6 x 59.9

2083302 Th. 17.1
20833 171 2 5
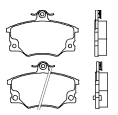
103.8 x 66.6

2095005 Th. 18
20950 180 0 4

108.9 x 47.3

2095006 Th. 18
20950 180 0 5
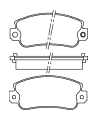
108.9 x 47.3

2096110 Th. 17.4
20961 174 1 4

87 x 53

2119301 Th. 18
21193 180 0 5
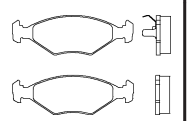
151.5 x 49.2

2119501 Th. 18
21195 180 0 5
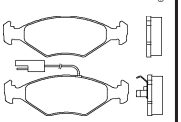
151.4 x 49.2

2127501 Th. 16.9
21275 169 1 5 T4067
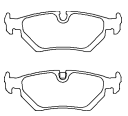
123 x 43

2136502 Th. 17
21365 170 0 4
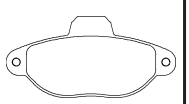
114.8 x 54.7

2138103 Th. 18
21381 180 0 5
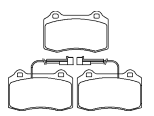
109.8 x 69.3

2143602 Th. 17
21436 170 0 4
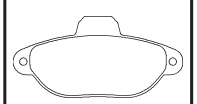
114.8 x 55.2

2143603 Th. 17
21436 170 1 4
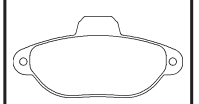
114.8 x 55.2

2172001 Th. 14.6
21720 146 1 5
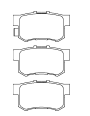
88.8 x 47.5

2179701 Th. 19.7
21797 197 2 5
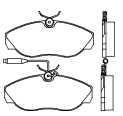
145 x 60.9

2179901 Th. 19.7
21799 197 2 5
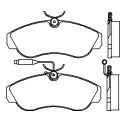
160 x 63.1

2180101 Th. 19.3
21801 193 2 5
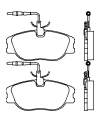
129.9 x 59.5

2192701 Th. 17.9
21927 179 0 5
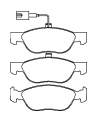
156.3 x 52.6

2192703 Th. 17.9
21927 179 9 5
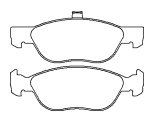
156.3 x 52.6

2193002 Th. 17.9
21930 179 0 5
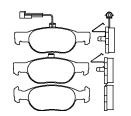
151.3 x 52

2193101 Th. 17.9
21931 179 0 5
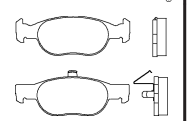
151.3 x 52

2196201 Th. 18
21962 180 0 5
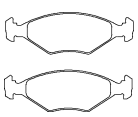
151.5 x 49.2

2304201 Th. 19
23042 190 1 4
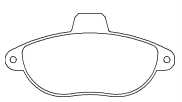
139.6 x 68.6

2316803 Th. 19.3
23168 193 2 5
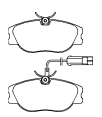
130.1 x 58.7

2317703 Th. 14.4
23177 144 1 4
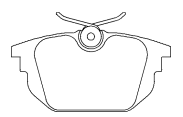
87.2 x 44.6

2318101 Th. 17.9
23181 179 0 5
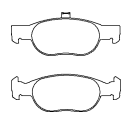
151.5 x 52

2321801 Th. 18
23218 180 0 5
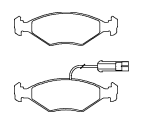
151.3 x 49.2

2321901 Th. 18
23219 180 0 5
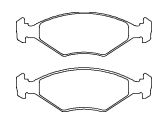
151.3 x 49.2

2322201 Th. 19
23222 190 0 5
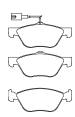
155.1/156.3 x 61.7/58.9

2322702 Th. 18
23227 180 0 5
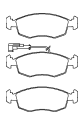
151.4 x 52.5

2328902 Th. 19
23289 190 0 5
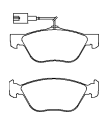
155.1/155.1 x 61.7/58.9

2351703 Th. 16.5
23517 165 1 4
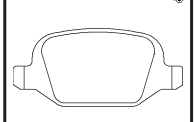
95.5 x 43.9

2355202 Th. 18
23552 180 0 5
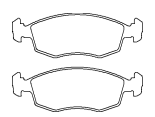
151.4 x 52.5

2357501 Th. 16
23575 160 0 5
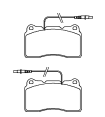
131.6 x 77.2

2360102 Th. 13.7
23601 137 1 4
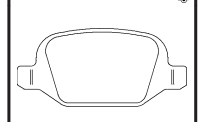
95.6 x 43.9

2360201 Th. 19.7
23602 197 2 5
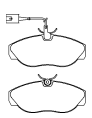
145 x 62.2

2360301 Th. 19.7
23603 197 2 5
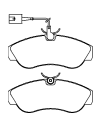
160.3 x 64.4

2370502 Th. 17.8
23705 178 1 5
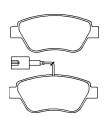
122.8 x 53.3

2370503 Th. 17.8
23705 178 1 4
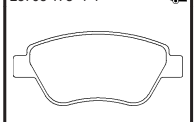
122.8 x 53.3

2370581 Th. 17.8
23705 178 1 5 epad

122.8 x 53.3

2370601 Th. 17.8
23706 178 1 5

122.8 x 53.3

2370802 Th. 19
23708 182 1 5

137 x 57.4

2370803 Th. 19
23708 182 1 4

137 x 57.5

2370881 Th. 19
23708 182 1 5 epad

137 x 57.4

2370901 Th. 19
23709 190 1 5

137 x 57.4

2371102 Th. 18.2
23711 182 1 5

151 x 57.5

2371104 Th. 19.4
23711 194 1 5

150.8 x 57.4

2371401 Th. 15.5
23714 155 1 4

94.8 x 42.9

2371403 Th. 17.2
23714 172 1 5

94.8 x 42.9

FIAT

2371481 Th. 15.5	2373807 Th. 20.6	2377501 Th. 18	2377601 Th. 18	2384201 Th. 18	2391701 Th. 19.1	2391901 Th. 19.1
23714 155 1 4 epad	23738 206 0 5	23775 180 0 5	23776 180 0 5	23842 180 0 5	23917 191 1 5	23919 191 1 5
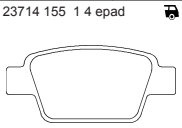	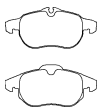	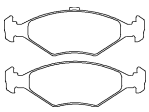	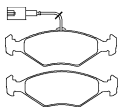	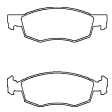	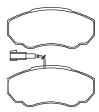	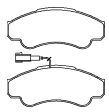
94.8 x 42.9	155.3/156.5 x 69.6/70.7	151.3 x 49.2	151.3 x 49.2	150.1/151.4 x 52.5/52.5	140.5 x 65.6	164.5 x 68.7

2392101 Th. 20.1	2397901 Th. 17.8	2397903 Th. 17.8	2407201 Th. 17.7	2407202 Th. 17.7	2416202 Th. 15.3	2428001 Th. 16
23921 201 1 4	23979 178 1 5	23979 178 2 5	24072 177 1 4	24072 177 2 5	24162 153 0 5	24280 160 1 5
	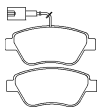	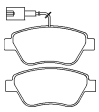	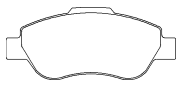	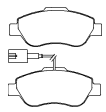	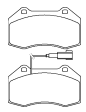	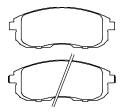
109.7 x 49.9	122.8 x 53.3	122.8 x 53.3	123 x 52.2	123 x 52.2	125 x 70.8	137.2 x 53

2429401 Th. 19.3	2434801 Th. 16.8	2434802 Th. 16.8	2434901 Th. 17.5	2439101 Th. 16	2446501 Th. 18.8	2446601 Th. 19
24294 193 1 5	24348 168 1 4	24348 168 2 4	24349 175 1 4	24391 160 1 5	24465 188 1 4	24466 190 1 5
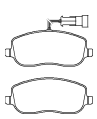				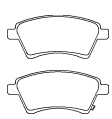		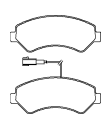
146.6 x 60	105.1 x 46.6	105.1 x 46.6	101.7 x 47.3	131.5 x 56.9	137.1 x 48.8	169.1 x 69.1

2446602 Th. 19	2446701 Th. 19	2446703 Th. 19	2446801 Th. 19	2446802 Th. 19	2446901 Th. 19	2446902 Th. 19
24466 190 2 5	24467 190 1 5	24467 190 3 5	24468 190 1 5	24468 190 2 5	24469 190 1 5	24469 190 2 5
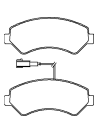	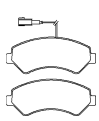	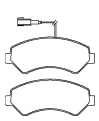	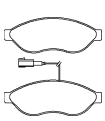	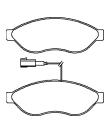	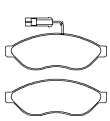	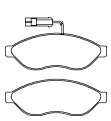
169.1 x 69.1	169.1 x 69.1	169.1 x 69.1	169.1 x 61.6	169.1 x 61.6	169.1 x 61.6	169.1 x 61.6

2454901 Th. 19.4	2457801 Th. 16.6	2459501 Th. 18.3	2460401 Th. 18.5	2468701 Th. 15.3	2472701 Th. 20	2482201 Th. 17
24549 194 0 5	24578 166 1 4	24595 183 1 5	24604 185 1 5	24687 153 0 5	24727 200 0 5	24822 170 1 4
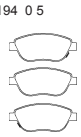	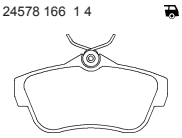		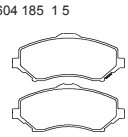	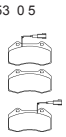		
137 x 57.4	113.5 x 58.2	162.2 x 66.8	146.6 x 63.4	124.8 x 70.8	156.3/155.1 x 71.5/69	116.7 x 52.7

2483901 Th. 19.4	2532301 Th. 17.3	2534701 Th. 13.7	2535701 Th. 17.3	2537601 Th. 17.6	2537801 Th. 18.1	2541001 Th. 14.4
24839 194 1 5	25323 173 0 5	25347 137 1 5	25357 173 1 5	25376 176 1 5	25378 181 1 5	25410 144 1 5
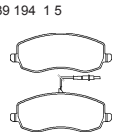	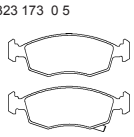	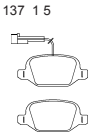	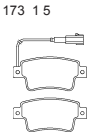	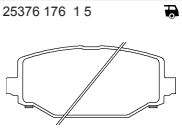		
162.5 x 63.7	149.3 x 52.5	95.6 x 43.9	101.8 x 47.4	130 x 54.7	183 x 63.2	95.6 x 43.8

2542901 Th. 16.7	2565201 Th. 17.1
25429 167 0 5	25652 171 0 5
149.3 x 52.5	95.8 x 43.8

FIAT (NANJING)

2355202 Th. 18	2370503 Th. 17.8	2377501 Th. 18
23552 180 0 5	23705 178 1 4	23775 180 0 5
151.4 x 52.5	122.8 x 53.3	151.3 x 49.2

FORD

2087702 Th. 17.5	2090702 Th. 18	2090802 Th. 18	2117105 Th. 18	2120203 Th. 17.8	2135803 Th. 19.8	2139408 Th. 18.5
20877 175 0 4 T428	20907 180 0 5	20908 180 0 5	21171 180 0 4	21202 178 0 5	21358 198 0 5	21394 185 0 5
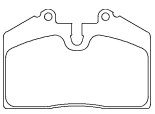	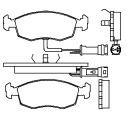	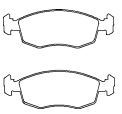	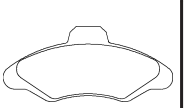	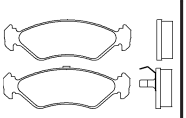	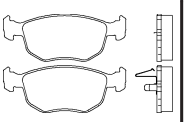	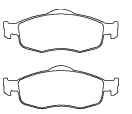
97.9 x 65.7	151.3 x 52.5	151.4 x 52.5	130.8 x 57.4	141.4 x 44.6	156.3 x 58.6	155.1/156.3 x 58.5/58.5

2143603 Th. 17	2143609 Th. 17	2146901 Th. 19	2146902 Th. 19	2147001 Th. 19	2147002 Th. 19	2183201 Th. 15
21436 170 1 4	21436 170 4 4	21469 190 0 4	21469 190 1 4	21470 190 0 4	21470 190 1 4	21832 150 0 4
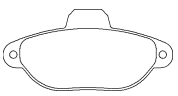	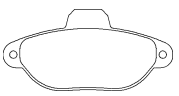	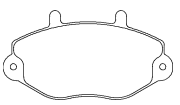	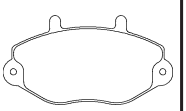	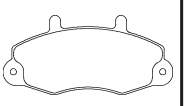	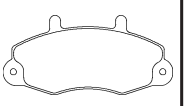	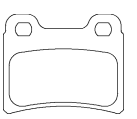
114.8 x 55.2	114.8 x 55.2	138.8 x 72.4	138.8 x 72.4	138.8 x 64.2	138.8 x 64.2	61.7 x 51

2184802 Th. 19.7	2184903 Th. 20.6	2191003 Th. 19.8	2307104 Th. 18.5	2310101 Th. 17.5	2310301 Th. 17.5	2315402 Th. 19.3
21848 197 0 5	21849 206 0 5	21910 198 0 5	23071 185 1 5	23101 175 0 5	23103 175 0 5	23154 193 0 5
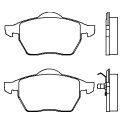	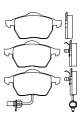	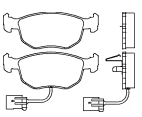	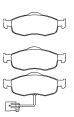	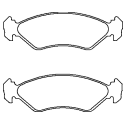	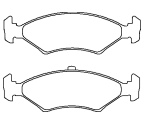	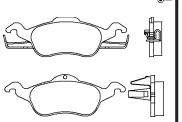
155.8/156.6 x 74.2/74.2	156.6 x 74	156.4 x 58.6	155.1/156.5 x 58.5/58.5	141.4 x 44.6	150.1 x 46.4	177.8 x 58.2/60.8

2320001 Th. 18.8	2326903 Th. 20.1	2327904 Th. 18.4	2330002 Th. 18	2332501 Th. 15	2335301 Th. 14	2341007 Th. 15.7
23200 188 0 5	23269 201 0 5	23279 184 1 4	23300 180 0 5	23325 150 0 4	23353 140 1 4	23410 157 1 4
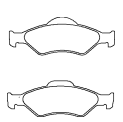	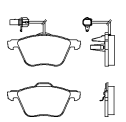		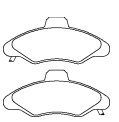	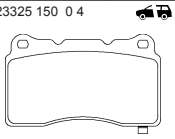	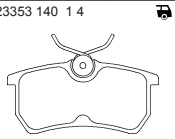	
150.1/151.3 x 54.1/51.2	161.3 x 74.4/72.9	148.9 x 60.5	131 x 57.4	131.8 x 77.5	87.2 x 42.5	116 x 53.6

2341008 Th. 15.7	2341801 Th. 19.6	2343401 Th. 17.7	2344004 Th. 17.6	2344007 Th. 17.1	2344605 Th. 16.5	2354001 Th. 16.5
23410 157 1 5	23418 196 0 5	23434 185 1 5	23440 176 0 5	23440 171 0 5	23446 165 1 5	23540 165 1 4
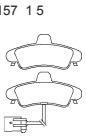		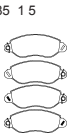	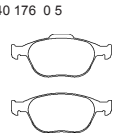	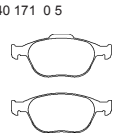	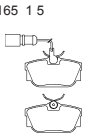	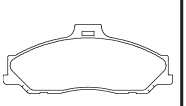
116 x 53.6	156.5 x 78.5	168.9 x 65	156.5/156.5 x 67.2/62.5	156.5/156.5 x 67.2/62.5	94.8 x 51	151.4 x 61.7

2355402 Th. 17.2	2355403 Th. 17.2	2355481 Th. 17.2	2355701 Th. 17.2	2357701 Th. 18.5	2360406 Th. 18.8	2372301 Th. 18.2
23554 172 1 4	23554 172 1 5	23554 172 1 4 epad	23557 172 1 4	23577 185 1 5	23604 188 0 5	23723 182 0 5
	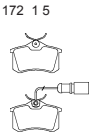			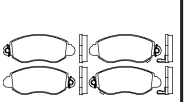		
87 x 53	87 x 53	87 x 53	115.6 x 51.7	168.5 x 65	150.1/151.3 x 61/58.2	155.1/155.1 x 62.4/67

2372381 Th. 18.2	2378701 Th. 18.3	2391201 Th. 18.5	2407202 Th. 17.7	2412301 Th. 20.3	2413701 Th. 16.7	2413781 Th. 16.7
23723 182 0 5 epad	23787 183 0 5	23912 185 0 5	24072 177 2 5	24123 203 0 5	24137 167 0 5	24137 167 0 5 epad
155.1/155.1 x 62.4/67	156.3 x 66.5	156.3/155.3 x 72.9	123 x 52.2	155.1/156.3 x 66.6/72	123.2 x 51.9	123.2 x 51.9

2414201 /19.8	2419401 Th. 15.3	2426001 Th. 16.3	2428302 Th. 17.6	2435301 Th. 16.9	2440901 Th. 18	2443901 Th. 15
24142 198 0 5	24194 153 0 5	24260 163 1 4	24283 176 1 4	24353 169 0 5	24409 180 1 5	24439 150 0 5
155.1/156.3 x 74.9/74.2	183.6 x 63.1	101.7 x 50.4	125.6 x 51.7	145.2 x 58.2	188 x 72.9	170.5 x 67.4

2448401 Th. 18.9	2448501 Th. 18.9	2448601 Th. 17.3	2449602 Th. 16.9	2453703 Th. 15.7	2458101 Th. 15	2458201 Th. 18.4
24484 189 1 4	24485 189 1 4	24486 173 1 4	24496 169 2 4	24537 157 3 4	24581 150 0 4	24582 184 0 4
164.9 x 66.7	164.9 x 65.3	123.1 x 50.1	106.7 x 48.8	95.4 x 43.2	110.6 x 41.7	136.9 x 58.8

FORD

2467001 Th. 17.1
24670 171 0 5
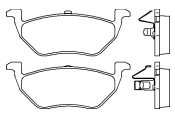
146 x 54.7

2474302 Th. 18.7
24743 187 0 5
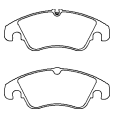
188 x 74.2/73.9

2476401 Th. 17.7
24764 177 1 5
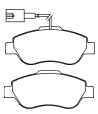
123 x 52.2

2482901 Th. 14.7
24829 147 0 4
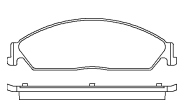
189.4 x 57

2513402 Th. 16.7
25134 167 1 5
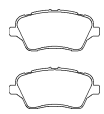
131.5 x 60

2521201 Th. 16.1
25212 161 0 5

123 x 51.9

2521281 Th. 16.1
25212 161 0 5 epad

123 x 51.9

2560201 Th. 17
25602 170 1 4
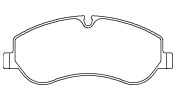
171.7 x 68.7

2560301 Th. 17.8
25603 178 1 5
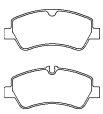
137.1 x 58.5/60.8

2563201 Th. 16.4
25632 164 1 5
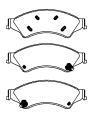
194.1 x 68.2

2573601 Th. 17.9
25736 179 0 5
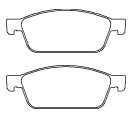
180.3 x 65.4

2574801 Th. 18.2
25748 182 0 5
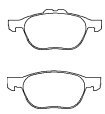
155.3 x 62.4

2912307 Th. 20.3
29123 203 2 4 T4014
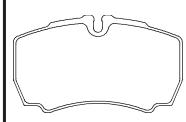
109.5 x 63.8

FORD (CHANGAN)

2327904 Th. 18.4
23279 184 1 4

148.9 x 60.5

2355701 Th. 17.2
23557 172 1 4
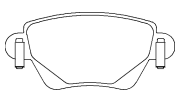
115.6 x 51.7

2412301 Th. 20.3
24123 203 0 5
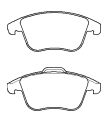
155.1/156.3 x 66.6/72

2426001 Th. 16.3
24260 163 1 4

101.7 x 50.4

2449602 Th. 16.9
24496 169 2 4

106.7 x 48.8

2453703 Th. 15.7
24537 157 3 4
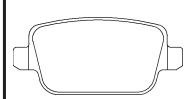
95.4 x 43.2

2521201 Th. 16.1
25212 161 0 5
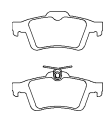
123 x 51.9

2521281 Th. 16.1
25212 161 0 5 epad
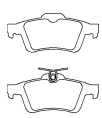
123 x 51.9

FORD ASIA / OZEANIA

2073101 Th. 15.2
20731 152 0 4
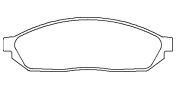
119.3 x 37.7

2114202 Th. 15.5
21142 155 0 4
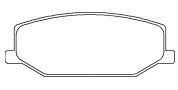
110.3 x 41.5

2135501 Th. 14.5
21355 145 0 5
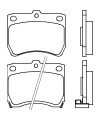
78.8 x 63.3

2330301 Th. 15.2
23303 152 0 5
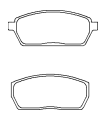
102.2/88.2 x 40

2347201 Th. 17
23472 170 0 5
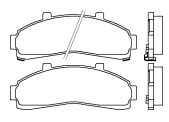
154 x 56.2

2354001 Th. 16.5
23540 165 1 4
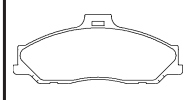
151.4 x 61.7

2367801 Th. 16
23678 160 1 4
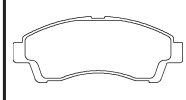
142.6 x 54.9

2435301 Th. 16.9
24353 169 0 5
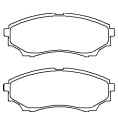
145.2 x 58.2

FORD AUSTRALIA

2000201 Th. 15
20002 150 0 5
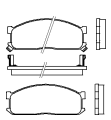
133.1 x 52.1

2139408 Th. 18.5
21394 185 0 5
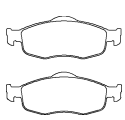
155.1/156.3 x 58.5/58.5

2146901 Th. 19
21469 190 0 4
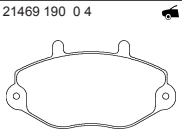
138.8 x 72.4

2146902 Th. 19
21469 190 1 4
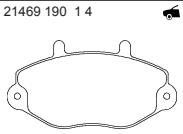
138.8 x 72.4

2147001 Th. 19
21470 190 0 4
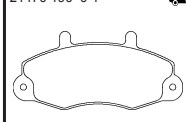
138.8 x 64.2

2147002 Th. 19
21470 190 1 4
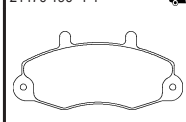
138.8 x 64.2

2153901 Th. 15
21539 150 0 5
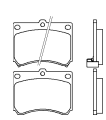
91.7 x 71

2157101 Th. 17.1
21571 171 1 4
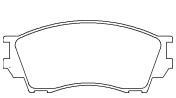
141.9 x 59.5

2165404 Th. 15
21654 153 1 5
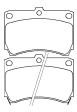
91.6 x 64

2307104 Th. 18.5
23071 185 1 5
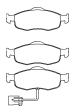
155.1/156.5 x 58.5/58.5

2310101 Th. 17.5
23101 175 0 5
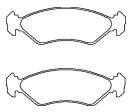
141.4 x 44.6

2315402 Th. 19.3
23154 193 0 5

177.8 x 58.2/60.8

2320001 Th. 18.8
23200 188 0 5

150.1/151.3 x 54.1/51.2

2324204 Th. 14.2
23242 142 1 4

114 x 55

FORD AUSTRALIA

2327904 Th. 18.4	2335301 Th. 14	2341007 Th. 15.7	2341008 Th. 15.7	2344004 Th. 17.6	2344007 Th. 17.1	2347201 Th. 17
23279 184 1 4	23353 140 1 4	23410 157 1 4	23410 157 1 5	23440 176 0 5	23440 171 0 5	23472 170 0 5
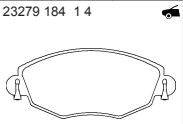	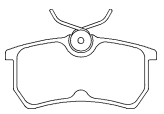	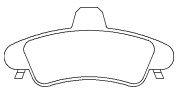	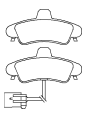	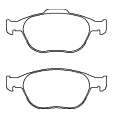	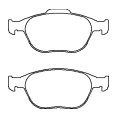	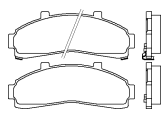
148.9 x 60.5	87.2 x 42.5	116 x 53.6	116 x 53.6	156.5/156.5 x 67.2/62.5	156.5/156.5 x 67.2/62.5	154 x 56.2

2348801 Th. 16	2349002 Th. 15	2354001 Th. 16.5	2355701 Th. 17.2	2357701 Th. 18.5	2360406 Th. 18.8	2362701 Th. 15
23488 160 1 4	23490 150 1 4	23540 165 1 4	23557 172 1 4	23577 185 1 5	23604 188 0 5	23627 150 0 5
			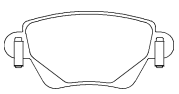	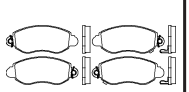	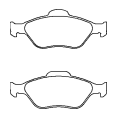	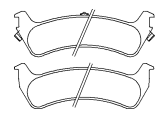
139 x 58.3	123 x 52	151.4 x 61.7	115.6 x 51.7	168.5 x 65	150.1/151.3 x 61/58.2	140.3 x 45.2

2367801 Th. 16	2372301 Th. 18.2	2372381 Th. 18.2	2378701 Th. 18.3	2384504 Th. 16.5	2391201 Th. 18.5	2412301 Th. 20.3
23678 160 1 4	23723 182 0 5	23723 182 0 5 epad	23787 183 0 5	23845 154 1 5	23912 185 0 5	24123 203 0 5
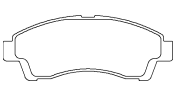	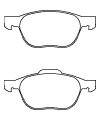	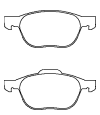	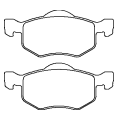	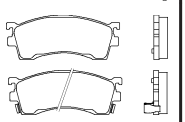	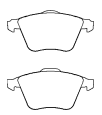	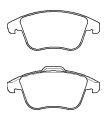
142.6 x 54.9	155.1/155.1 x 62.4/67	155.1/155.1 x 62.4/67	156.3 x 66.5	132 x 51.5	156.3/155.3 x 72.9	155.1/156.3 x 66.6/72

2413701 Th. 16.7	2413781 Th. 16.7	2414201 /19.8	2419401 Th. 15.3	2428302 Th. 17.6	2435301 Th. 16.9	2438101 Th. 14.6
24137 167 0 5	24137 167 0 5 epad	24142 198 0 5	24194 153 0 5	24283 176 1 4	24353 169 0 5	24381 146 0 5
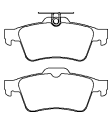	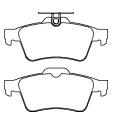	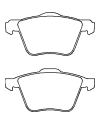	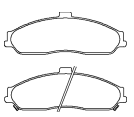		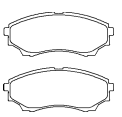	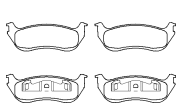
123.2 x 51.9	123.2 x 51.9	155.1/156.3 x 74.9/74.2	183.6 x 63.1	125.6 x 51.7	145.2 x 58.2	140.5 x 49.3

2443901 Th. 15	2448401 Th. 18.9	2448501 Th. 18.9	2448601 Th. 17.3	2451301 Th. 17.8	2452501 Th. 15.5	2453703 Th. 15.7
24439 150 0 5	24484 189 1 4	24485 189 1 4	24486 173 1 4	24513 178 0 4	24525 155 0 5	24537 157 3 4
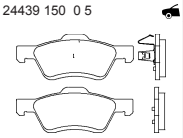		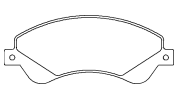			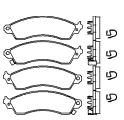	
170.5 x 67.4	164.9 x 66.7	164.9 x 65.3	123.1 x 50.1	162.6 x 54.5	171 x 51.1	95.4 x 43.2

2467001 Th. 17.1	2482901 Th. 14.7	2506801 Th. 16.4	2521201 Th. 16.1	2521281 Th. 16.1	2563201 Th. 16.4	2573601 Th. 17.9
24670 171 0 5	24829 147 0 4	25068 164 0 4	25212 161 0 5	25212 161 0 5 epad	25632 164 1 5	25736 179 0 5
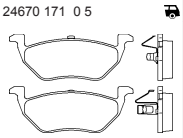	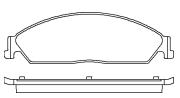	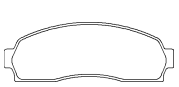				
146 x 54.7	189.4 x 57	153.9 x 53.3	123 x 51.9	123 x 51.9	194.1 x 68.2	180.3 x 65.4

2574801 Th. 18.2	2585301 Th. 15.4	2585401 Th. 12.9	2585501 Th. 12.9	2912307 Th. 20.3
25748 182 0 5	25853 154 0 4	25854 129 0 5	25855 129 0 5	29123 203 2 4 T4014
155.3 x 62.4	169.3 x 62.1	130.1 x 61.5	130.1 x 61.5	109.5 x 63.8

FORD USA

2135803 Th. 19.8	2139408 Th. 18.5	2183001 Th. 15.7	2191003 Th. 19.8	2307104 Th. 18.5	2341007 Th. 15.7	2341008 Th. 15.7
21358 198 0 5	21394 185 0 5	21830 157 0 5	21910 198 0 5	23071 185 1 5	23410 157 1 4	23410 157 1 5
156.3 x 58.6	155.1/156.3 x 58.5/58.5	172/160.1 x 62.6/62.5	156.4 x 58.6	155.1/156.5 x 58.5/58.5	116 x 53.6	116 x 53.6

FORD USA

2342301 Th. 17.8
23423 178 1 4
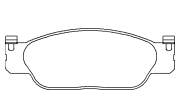
163.4 x 58

2342401 Th. 17.8
23424 178 1 4
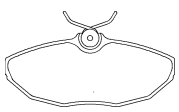
114.1 x 49.5

2347201 Th. 17
23472 170 0 5
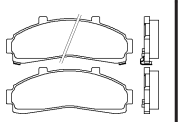
154 x 56.2

2360406 Th. 18.8
23604 188 0 5
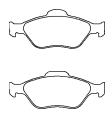
150.1/151.3 x 61/58.2

2362701 Th. 15
23627 150 0 5
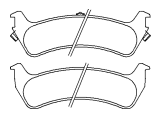
140.3 x 45.2

2363501 Th. 18
23635 180 0 4
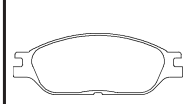
164.1 x 58

2363701 Th. 17
23637 170 0 4
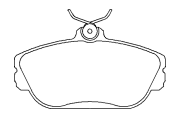
123.9 x 66.5

2372301 Th. 18.2
23723 182 0 5
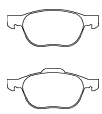
155.1/155.1 x 62.4/67

2372381 Th. 18.2
23723 182 0 5 epad
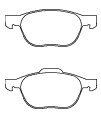
155.1/155.1 x 62.4/67

2378701 Th. 18.3
23787 183 0 5
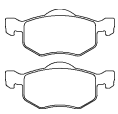
156.3 x 66.5

2409901 Th. 18
24099 180 0 4

137 x 70.6

2410001 Th. 15.5
24100 155 0 4
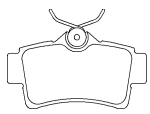
90 x 49.3

2413701 Th. 16.7
24137 167 0 5
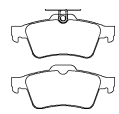
123.2 x 51.9

2413781 Th. 16.7
24137 167 0 5 epad
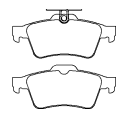
123.2 x 51.9

2426001 Th. 16.3
24260 163 1 4

101.7 x 50.4

2437701 Th. 14.6
24377 146 0 5
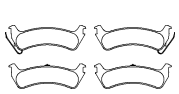
140.3 x 45.2

2438101 Th. 14.6
24381 146 0 5
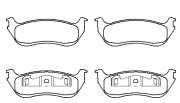
140.5 x 49.3

2443901 Th. 15
24439 150 0 5
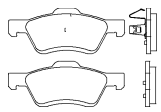
170.5 x 67.4

2451301 Th. 17.8
24513 178 0 4

162.6 x 54.5

2451401 Th. 17.3
24514 173 0 4
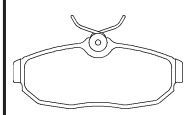
113 x 46.8

2452501 Th. 15.5
24525 155 0 5
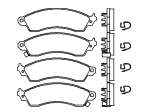
171 x 51.1

2454401 Th. 17.5
24544 175 1 4
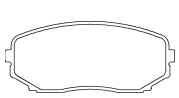
139.1 x 57.9

2454501 Th. 17.9
24545 179 0 4
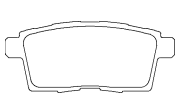
110.4 x 45.9

2458002 Th. 17
24580 170 0 4 T4136
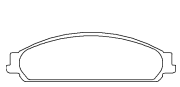
182.4 x 52.6

2458101 Th. 15
24581 150 0 4
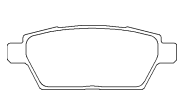
110.6 x 41.7

2458201 Th. 18.4
24582 184 0 4

136.9 x 58.8

2467001 Th. 17.1
24670 171 0 5
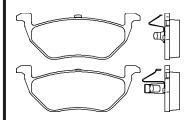
146 x 54.7

2475301 Th. 16.5
24753 165 0 5
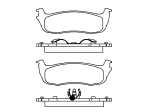
142.5 x 48.4

2475701 Th. 16.3
24757 163 0 5
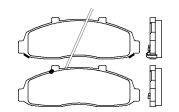
163.3 x 57.3

2477201 Th. 17.4
24772 174 0 4
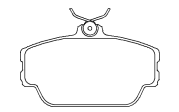
123.8 x 73.6

2477601 Th. 15.4
24776 155 0 5
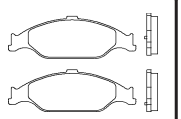
183.5 x 60.5

2479901 Th. 16.9
24799 169 0 4

116 x 52.3

2506801 Th. 16.4
25068 164 0 4
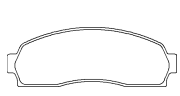
153.9 x 53.3

FSO

2007304 Th. 17.3
20073 173 0 4
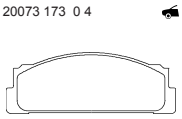
108.9 x 39

2007404 Th. 10
20074 100 0 4
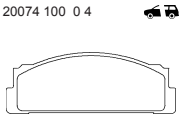
108.7 x 39

2054701 Th. 16.8
20547 168 0 5
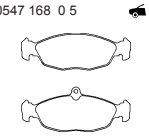
140.1/141.3 x 58.3/48.2

2186201 Th. 18.3
21862 183 0 5
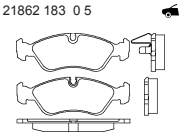
156.3 x 52.5

GEELY

2359201 Th. 15
23592 150 0 4

82.6 x 38.5

2390401 Th. 16.6
23904 166 0 5
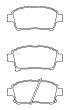
116.6/116.6 x 51.4/54.4

GMC

2437001 Th. 16.1
24370 161 0 5
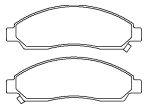
167.3 x 54.3

GREAT WALL

2168901 Th. 15.5
21689 155 0 4

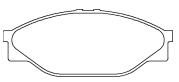

140.1 x 55

2390401 Th. 16.6
23904 166 0 5

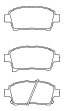

116.6/116.6 x 51.4/54.4

HAFEI

2172501 Th. 17
21725 170 0 5

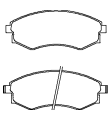

137 x 54

HAIMA (FAW)

2384504 Th. 16.5
23845 154 1 5

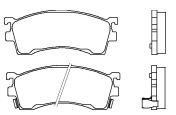

132 x 51.5

2404501 Th. 13
24045 130 0 4

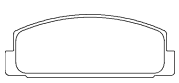

107.8 x 39.5

HAWTAI

2381301 Th. 15.8
23813 158 0 5

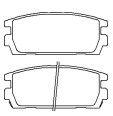

110.3 x 46.5

2424601 Th. 17
24246 170 0 5

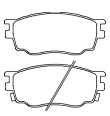

131.2 x 56

2435101 Th. 17.6
24351 176 0 5

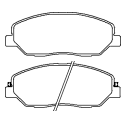

156.9 x 60.9

2448801 Th. 16.2
24488 162 0 5

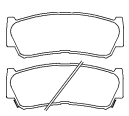

118.7 x 46.8

HOLDEN

2022401 Th. 20.9
20224 209 0 5



155.1/156.4 x 73.1/77.6

2054701 Th. 16.8
20547 168 0 5

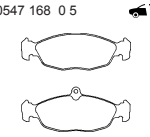

140.1/141.3 x 58.3/48.2

2105002 Th. 15.2
21050 152 0 4



61.6 x 61.1

2154302 Th. 16.5
21543 165 0 5

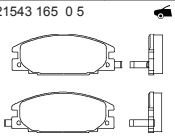

127.3 x 49.3

2184501 Th. 16.5
21845 165 0 5

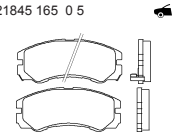

137.8 x 58.6

2187503 Th. 15.8
21875 158 0 5

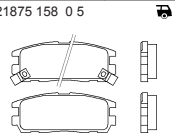

109.5 x 42.6

2306302 Th. 17.3
23063 173 0 5

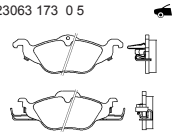

177.6/160 x 62.1/62.8

2309204 Th. 15
23092 150 0 5

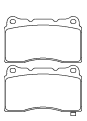

131.6 x 77.2

2311502 Th. 19.6
23115 196 0 5

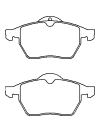

156.3/155.3 x 74/73.9

2311701 Th. 20.2
23117 202 0 5

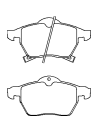

156.5/155.3 x 74

2322501 Th. 17
23225 170 1 5

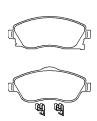

131.5/131.5 x 51.4/55.4

2323401 Th. 16.9
23234 169 0 5

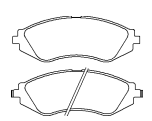

143.1 x 51.3

2324204 Th. 14.2
23242 142 1 4

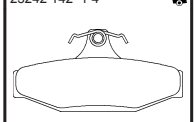

114 x 55

2325001 Th. 16.5
23250 165 0 5

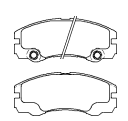

137.6 x 58.5

2325803 Th. 16.9
23258 169 2 5

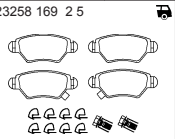

104.9 x 42.7

2328404 Th. 14
23284 140 1 4

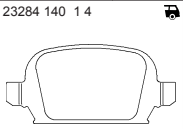

95.6 x 43.9

2340404 Th. 20.4
23404 204 1 5

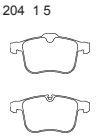

155.1/156.4 x 73.1/77.6

2341702 Th. 15.2
23417 152 1 4

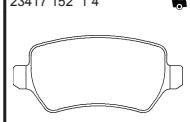

95.3 x 42.8

2341703 Th. 15.2
23417 152 1 5



95.5 x 42.8

2341781 Th. 15.2
23417 152 1 4 epad

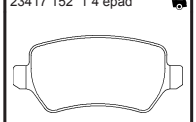

95.3 x 42.8

2350701 Th. 15
23507 150 0 5

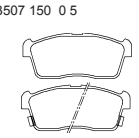

108.6 x 45.4

HOLDEN

2360501 Th. 15.5	2361401 Th. 14	2373807 Th. 20.6	2383201 Th. 19.6	2383281 Th. 19.6	2397401 Th. 17.8	2397406 Th. 17.8
23605 155 1 5	23614 140 0 4	23738 206 0 5	23832 196 0 5	23832 196 0 5 epad	23974 178 0 4	23974 178 0 5
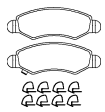	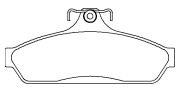	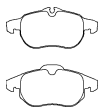	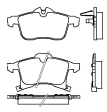	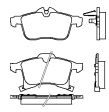	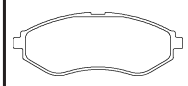	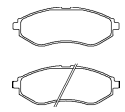
130.9 x 44.5	136 x 60.5	155.3/156.5 x 69.6/70.7	156.3/155.1 x 76/69.6	156.3/155.1 x 76/69.6	133.2 x 48.9	133.2 x 48.9

2406201 Th. 17.6	2407101 Th. 14.6	2413701 Th. 16.7	2413781 Th. 16.7	2437001 Th. 16.1	2441201 Th. 19.1	2441501 Th. 19.1
24062 176 0 5	24071 146 0 4	24137 167 0 5	24137 167 0 5 epad	24370 161 0 5	24412 191 1 5	24415 191 1 5
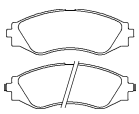		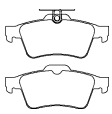	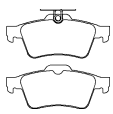	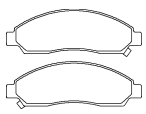	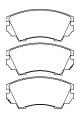	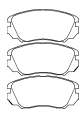
143.1 x 51.1	104.6 x 38.9	123.2 x 51.9	123.2 x 51.9	167.3 x 54.3	142.1 x 66.7	131.5 x 59.7

2442101 Th. 17.3	2442102 Th. 17.3	2449801 Th. 15.4	2451001 Th. 16.9	2474401 Th. 14.7	2481501 Th. 14.5	2481801 Th. 18.5
24421 173 1 5	24421 173 2 5	24498 154 0 5	24510 169 0 5	24744 147 0 5	24815 145 0 5	24818 185 0 5
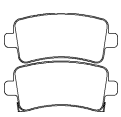	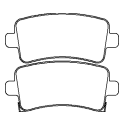	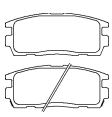	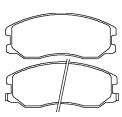	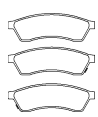	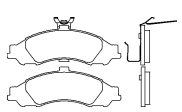	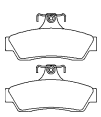
106.4 x 47.1	106.4 x 47.1	110.9 x 45.7	149.4 x 62	121.1 x 39	183.6 x 64	113.8 x 57.9

2486401 Th. 17	2503101 Th. 18.8	2503181 Th. 18.8	2503401 Th. 18.8	2503481 Th. 18.8	2509601 Th. 16.2	2509602 Th. 16.2
24864 170 0 5	25031 188 1 5	25031 188 1 5	25034 188 1 5	25034 188 1 5 epad	25096 162 1 5	25096 162 9 5
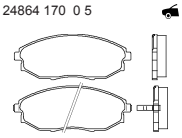	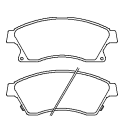	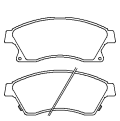	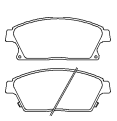	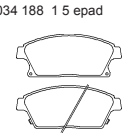	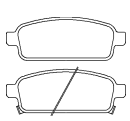	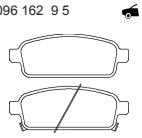
144 x 56.5	148 x 60.3	148 x 60.3	148 x 61.1	148 x 61.1	116.6 x 42.6	116.6 x 42.6

2509681 Th. 16.2	2514901 Th. 15.8	2526801 Th. 17.9	2574501 Th. 17.5
25096 162 1 5 epad	25149 158 1 5	25268 179 0 5	25745 175 0 5
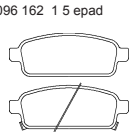	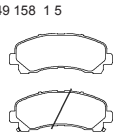	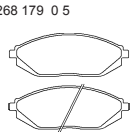	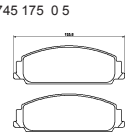
116.6 x 42.6	151.8 x 60.8	133 x 48.8	144.6 x 52.6

HONDA

2131201 Th. 13	2132201 Th. 15	2147903 Th. 19.2	2149701 Th. 18	2151503 Th. 18	2165101 Th. 17.3	2169401 Th. 17.3
21312 130 0 5	21322 150 0 5	21479 192 1 5	21497 180 0 5	21515 180 1 5	21651 173 0 5	21694 173 0 5
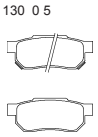	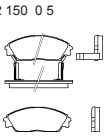	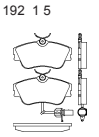	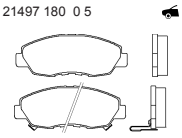	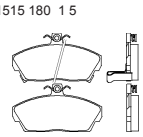	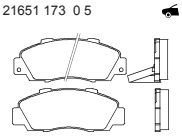	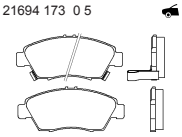
88.8 x 35.1	132.1/132.2 x 48.6/49.3	129.9 x 65.2	137.7 x 52.4	129.2 x 69.7	148.6 x 57.7	136.4 x 57.8

2169701 Th. 15.8	2171901 Th. 14.6	2172001 Th. 14.6	2173801 Th. 13	2187901 Th. 18.5	2309401 Th. 17	2309601 Th. 17.2
21697 158 0 5	21719 146 0 5	21720 146 1 5	21738 130 0 5	21879 185 0 5	23094 170 0 5	23096 172 0 5
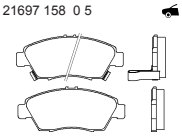						
131.3 x 54.5	88.7 x 46.8	88.8 x 47.5	88.8 x 36.8	137.7 x 53.7	131.7 x 58.4	131.6 x 49.2

2317801 Th. 16	2335501 Th. 15	2342001 Th. 16.5	2352701 Th. 15	2356601 Th. 17.2	2361601 Th. 13.3	2365201 Th. 14.8
23178 160 0 5	23355 150 0 5	23420 165 0 5	23527 150 1 4	23566 172 0 5	23616 133 0 5	23652 148 0 5
135.5 x 52.4	111 x 56.8	159 x 56.1	87.4 x 52.9	129 x 54.8	118.9 x 48.3	88.8 x 47.5

HONDA

2372001 Th. 17	2372901 Th. 17	2386801 Th. 16.9	2405301 Th. 16.9	2408601 Th. 15.7	2408701 Th. 17.5	2413701 Th. 16.7
23720 170 0 5	23729 170 0 5	23868 169 0 5	24053 169 0 5	24086 157 1 5	24087 175 1 5	24137 167 0 5
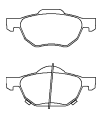	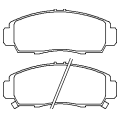	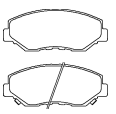	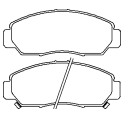	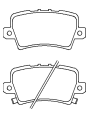	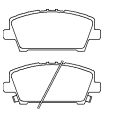	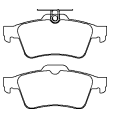
156.3/155.1 x 64.6/68.3	148.7 x 58.5	141.7 x 56.6	148.9 x 58.9	95 x 46.4	131.7 x 55.8	123.2 x 51.9

2413781 Th. 16.7	2423101 Th. 14.9	2434101 Th. 15.3	2434201 Th. 17.8	2443402 Th. 15.6	2443501 Th. 14.8	2463501 Th. 16.5
24137 167 0 5 epad	24231 149 0 5	24341 153 0 5	24342 178 1 5	24434 148 1 5	24435 148 1 5	24635 165 1 5
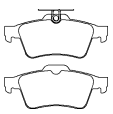	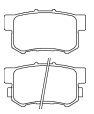	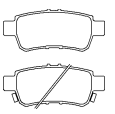	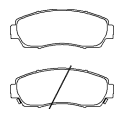	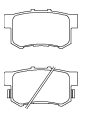	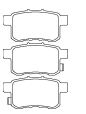	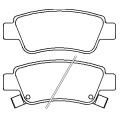
123.2 x 51.9	88.6 x 47.6	112.7 x 46.7	154.6 x 58.6	89 x 47.6	93.7 x 46.6	108.9 x 42.7

2463801 Th. 19	2476601 Th. 17.5	2479601 Th. 17.5	2480501 Th. 18	2497901 Th. 16.5	2499601 Th. 17.4	2505401 Th. 14.6
24638 190 1 5	24766 162 1 5	24796 175 0 5	24805 180 1 4	24979 165 0 5	24996 170 1 5	25054 146 0 5
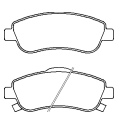	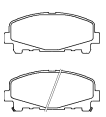	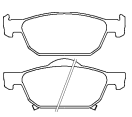	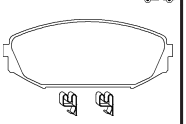	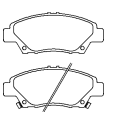	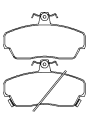	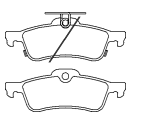
151.2 x 60.2/56.8	151.7 x 64.7	154.8 x 55/62.2	139.2 x 56.5	136.3 x 56.3	130 x 73	123 x 43.7

2511701 Th. 16	2516601 Th. 15.9	2524301 Th. 15.2	2529701 Th. 17.8	2543401 Th. 15.2	2560801 Th. 16.9
25117 160 1 5	25166 159 1 5	25243 152 0 5	25297 178 1 5	25434 152 1 4	25608 169 1 5
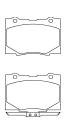	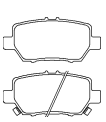	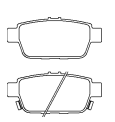	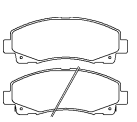	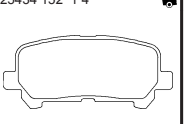	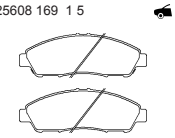
116.5 x 79.2/90.8	106.5 x 48.4	112.9 x 49.4	157.7 x 58.2	113.2 x 48.2	169.4 x 57.9

HONDA (DONGFENG)

2171901 Th. 14.6	2372901 Th. 17	2386801 Th. 16.9	2423101 Th. 14.9	2443501 Th. 14.8
21719 146 0 5	23729 170 0 5	23868 169 0 5	24231 149 0 5	24435 148 1 5
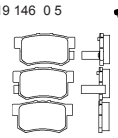	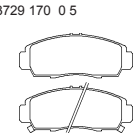	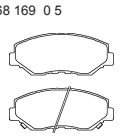	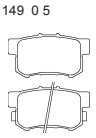	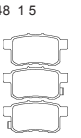
88.7 x 46.8	148.7 x 58.5	141.7 x 56.6	88.6 x 47.6	93.7 x 46.6

HONDA (GAC)

2149701 Th. 18	2165101 Th. 17.3	2169701 Th. 15.8	2171901 Th. 14.6	2173801 Th. 13	2365201 Th. 14.8	2372901 Th. 17
21497 180 0 5	21651 173 0 5	21697 158 0 5	21719 146 0 5	21738 130 0 5	23652 148 0 5	23729 170 0 5
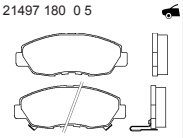	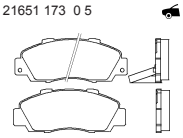	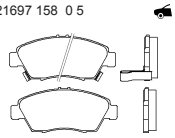	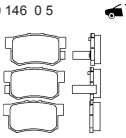	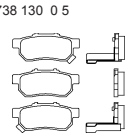	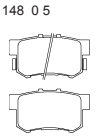	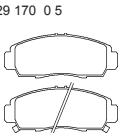
137.7 x 52.4	148.6 x 57.7	131.3 x 54.5	88.7 x 46.8	88.8 x 36.8	88.8 x 47.5	148.7 x 58.5

2405301 Th. 16.9	2497901 Th. 16.5
24053 169 0 5	24979 165 0 5
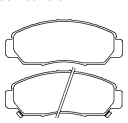	
148.9 x 58.9	136.3 x 56.3

HONGQI

2301802 Th. 20.4	2301881 Th. 20.4	2355402 Th. 17.2	2355481 Th. 17.2	2392801 Th. 17
23018 204 0 5	23018 204 0 5 epad	23554 172 1 4	23554 172 1 4 epad	23928 170 0 4
156.4 x 74	156.4 x 74	87 x 53	87 x 53	131.6 x 58.3

HSV

2341702 Th. 15.2
23417 152 1 4

95.3 x 42.8

2341781 Th. 15.2
23417 152 1 4 epad

95.3 x 42.8

2373807 Th. 20.6
23738 206 0 5
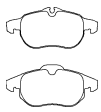
155.3/156.5 x 69.6/70.7

2481501 Th. 14.5
24815 145 0 5
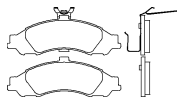
183.6 x 64

2481801 Th. 18.5
24818 185 0 5
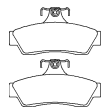
113.8 x 57.9

HUALI

2165001 Th. 15
21650 150 1 4
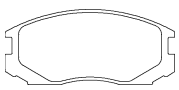
114 x 50

HUMMER

2182001 Th. 15.5
21820 155 0 5
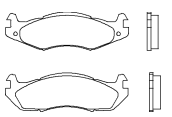
176.8 x 54.9/54.9

HYUNDAI

2101202 Th. 14.8
21012 148 0 5
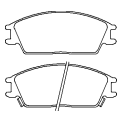
127.4 x 49

2101204 Th. 14.8
21012 148 0 4
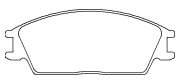
127.4 x 49

2155301 Th. 14
21553 140 0 5
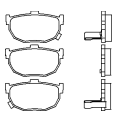
85.3 x 46.5

2164701 Th. 16
21647 160 0 5
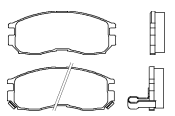
127.8 x 52.1

2170602 Th. 15.5
21706 155 0 5
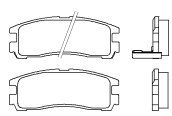
107.7 x 41

2172501 Th. 17
21725 170 0 5
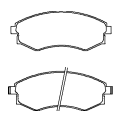
137 x 54

2308101 Th. 19
23081 190 0 5
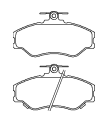
130.1 x 72.6

2323802 Th. 16
23238 160 0 5
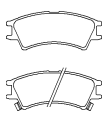
104.6 x 41.7

2351801 Th. 17
23518 170 0 5
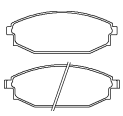
137 x 52.3

2353601 Th. 15.5
23536 155 0 5
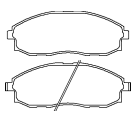
147 x 53.5

2354301 Th. 15
23543 150 0 5
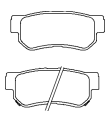
98.6 x 41

2356901 Th. 17
23569 170 0 5
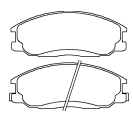
148.9 x 58.1

2360801 Th. 15
23608 150 0 5
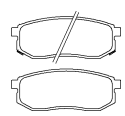
103 x 39.3

2372601 Th. 16.5
23726 165 0 5
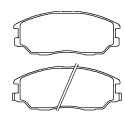
149.1 x 61

2381301 Th. 15.8
23813 158 0 5
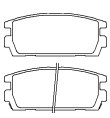
110.3 x 46.5

2389101 Th. 16.9
23891 169 0 5
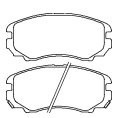
131.6 x 59.9

2389105 Th. 17.8
23891 178 1 5
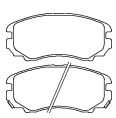
131.6 x 59.9

2396601 Th. 16.4
23966 164 0 5
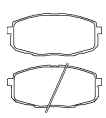
130.1 x 58.1

2403101 Th. 16.8
24031 168 0 5
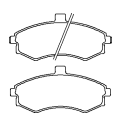
137.1 x 63.4

2405901 Th. 16.6
24059 166 0 5
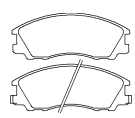
148.9 x 57.9

2427501 Th. 16.8
24275 168 0 5
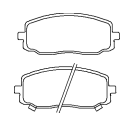
116.2 x 47.4

2427601 Th. 14.8
24276 148 0 5
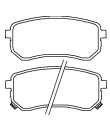
92.5 x 41

2427701 Th. 16.5
24277 165 0 5
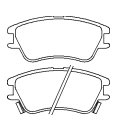
104.6 x 47.1

2431701 Th. 17.5
24317 175 0 5
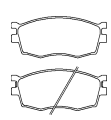
129.8 x 56

2432001 Th. 15.9
24320 159 0 5
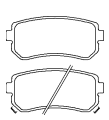
93.1 x 41.1

2435101 Th. 17.6
24351 176 0 5
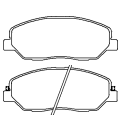
156.9 x 60.9

2436901 Th. 17
24369 170 0 5
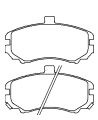
131.3 x 70

2437501 Th. 18
24375 180 0 5
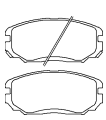
131.6 x 59.6

2448801 Th. 16.2
24488 162 0 5
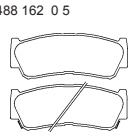
118.7 x 46.8

2458601 Th. 17.8
24586 178 1 5
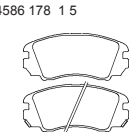
131.6 x 59.9

2459701 Th. 17.6
24597 176 1 5
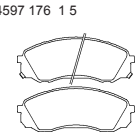
164.6 x 63.4

2459901 Th. 15.5
24599 155 1 5
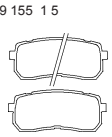
110.4 x 47.8

2461801 Th. 17.8
24618 178 1 5
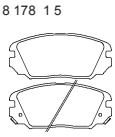
131.7 x 59.6

2491001 Th. 16.7
24910 168 0 5

116.1 x 48.7

2491501 Th. 17.3
24915 173 1 5

140.7 x 59.9

HYUNDAI

2493401 Th. 15.5
24934 155 1 5
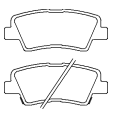
99.9 x 41

2494901 Th. 16.5
24949 165 0 5

92.9 x 40.8

2501901 Th. 17.5
25019 175 1 5
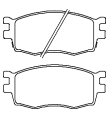
129.8 x 56

2518701 Th. 17.7
25187 177 1 5
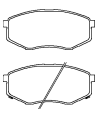
129.8 x 56.5

2520501 Th. 17.5
25205 175 1 5
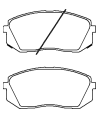
137.7 x 60.8

2529201 Th. 15.9
25292 159 1 5
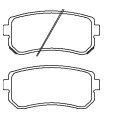
93.1 x 41.1

2533701 Th. 15.7
25337 157 1 5
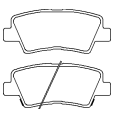
99.7 x 40.9

2534801 Th. 17.8
25348 178 1 5
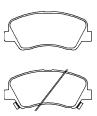
132.7 x 58

2551301 Th. 17.9
25513 179 1 4
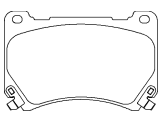
126 x 81.6

2552001 Th. 15.5
25520 155 1 5
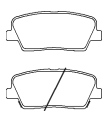
116.8 x 48.3

2564701 Th. 15.7
25647 157 1 5
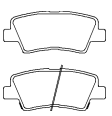
99.7 x 40.9

HYUNDAI (BEIJING)

2155301 Th. 14
21553 140 0 5
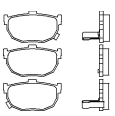
85.3 x 46.5

2354301 Th. 15
23543 150 0 5
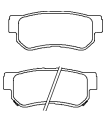
98.6 x 41

2389101 Th. 16.9
23891 169 0 5
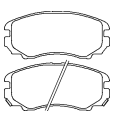
131.6 x 59.9

2396601 Th. 16.4
23966 164 0 5
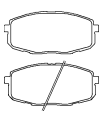
130.1 x 58.1

2403101 Th. 16.8
24031 168 0 5
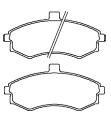
137.1 x 63.4

2432001 Th. 15.9
24320 159 0 5
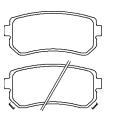
93.1 x 41.1

2520501 Th. 17.5
25205 175 1 5
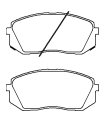
137.7 x 60.8

2529201 Th. 15.9
25292 159 1 5
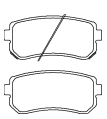
93.1 x 41.1

HYUNDAI (HUATAI)

2354301 Th. 15
23543 150 0 5
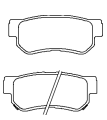
98.6 x 41

2356901 Th. 17
23569 170 0 5
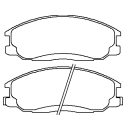
148.9 x 58.1

2381301 Th. 15.8
23813 158 0 5
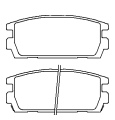
110.3 x 46.5

2424601 Th. 17
24246 170 0 5
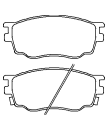
131.2 x 56

2435101 Th. 17.6
24351 176 0 5
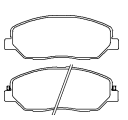
156.9 x 60.9

2448801 Th. 16.2
24488 162 0 5
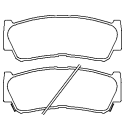
118.7 x 46.8

INFINITI

2156101 Th. 17
21561 170 0 5
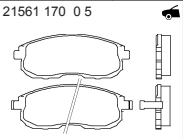
137.1 x 53

2171301 Th. 16.4
21713 164 0 5
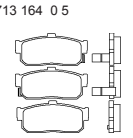
105.3 x 46.8

2318401 Th. 14.5
23184 145 0 5
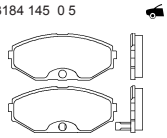
139.2 x 59.5

2336701 Th. 15
23367 150 0 5
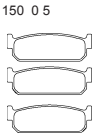
108.8 x 35.8

2342001 Th. 16.5
23420 165 0 5
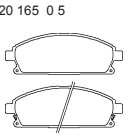
159 x 56.1

2369801 Th. 16
23698 160 0 5
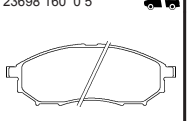
157.3 x 58.5

2369803 Th. 17
25698 170 0 5
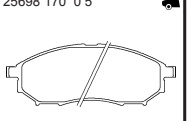
157.3 x 58.5

2387101 Th. 13.8
23871 138 0 5
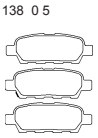
105.4 x 36.5

2405601 Th. 15.5
24056 155 0 5
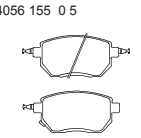
135.7 x 66

2411102 Th. 17.1
24111 171 0 5
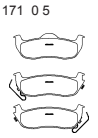
142.5 x 52.2/49

2487101 Th. 13.8
24871 138 0 5
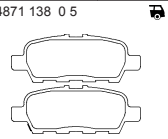
105.4 x 39.4

2492001 Th. 15.6
24920 156 0 5
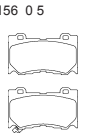
127.3 x 75.5

2492101 Th. 13.5
24921 135 0 5
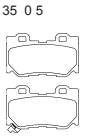
99.8 x 59.3

2493001 Th. 16.4
24930 164 0 5
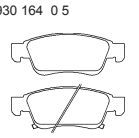
158.2 x 58.4

2499401 Th. 15.9
24994 159 0 5
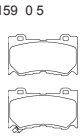
127.3 x 75.5

2499501 Th. 13.8
24995 138 0 5

99.8 x 59.3

2534001 Th. 15
25340 150 0 5

127.5 x 49.9

2577801 Th. 13.8
25778 138 0 5

105.6 x 39.4

INOKOM

2101202 Th. 14.8
21012 148 0 5
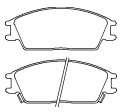
127.4 x 49

ISUZU

2111501 Th. 15.5
21115 155 0 4
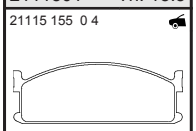
133.1 x 45.7

2154302 Th. 16.5
21543 165 0 5
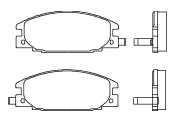
127.3 x 49.3

2184501 Th. 16.5
21845 165 0 5
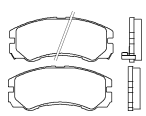
137.8 x 58.6

2187503 Th. 15.8
21875 158 0 5
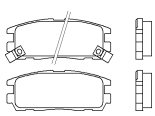
109.5 x 42.6

2437001 Th. 16.1
24370 161 0 5
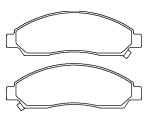
167.3 x 54.3

2444501 Th. 16.9
24445 169 0 5
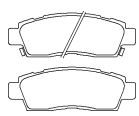
137.7 x 47

2444801 Th. 16.8
24448 168 1 4
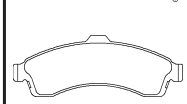
177 x 62.6

2514901 Th. 15.8
25149 158 1 5
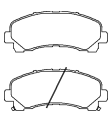
151.8 x 60.8

IVECO

2074105 Th. 15
20741 150 1 4
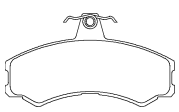
130 x 71.5

2466301 Th. 14
24663 140 0 4
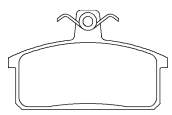
99 x 61.5

2910701 Th. 20
29107 200 0 5 T456
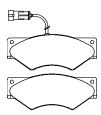
174.6 x 69.2

2912111 Th. 17
29121 170 0 4 T3035
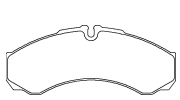
164.7 x 66.3

2912112 Th. 20.3
29121 203 0 4 T3035
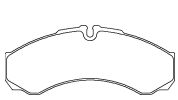
164.7 x 66.3

2912113 Th. 20.3
29121 203 1 5 T3035
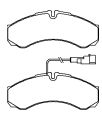
164.7 x 66.3

2912303 Th. 20.3
29123 203 1 4 T3078
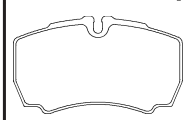
109.5 x 63.8

2913801 Th. 18
29138 180 0 5 T3078
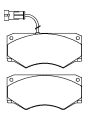
149 x 69

2913901 Th. 18.3
29139 183 0 5 T4136
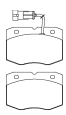
109.5 x 73

2914001 Th. 18.3
29140 183 0 5 T4047
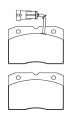
109.5 x 73

2916002 Th. 19.9
29160 199 0 4 T4136
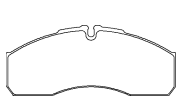
164.7 x 67.8

2922901 Th. 21.4
29229 214 1 4 T4136

163.3 x 67.2

2923201 Th. 21
29232 210 1 4 T4136
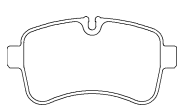
141.3 x 72.7

JAC

2354301 Th. 15
23543 150 0 5
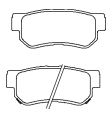
98.6 x 41

JAGUAR

2127504 Th. 16.9
21275 169 0 5 T4047
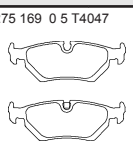
123 x 43

2138102 Th. 15
21381 150 0 4
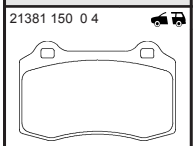
109.8 x 69.3

2312601 Th. 17.5
23126 175 0 5
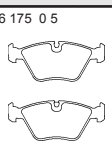
156.3 x 64

2327904 Th. 18.4
23279 184 1 4
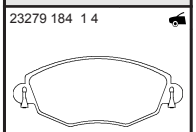
148.9 x 60.5

2329301 Th. 18.2
23293 182 0 5
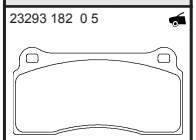
131.6 x 67.2

2342301 Th. 17.8
23423 178 1 4
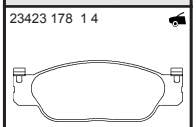
163.4 x 58

2342401 Th. 17.8
23424 178 1 4
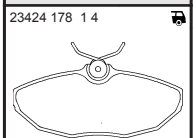
114.1 x 49.5

JAGUAR

2347001 Th. 17.8
23470 178 1 4

164.6 x 58

2348901 Th. 16.3
23489 163 0 5
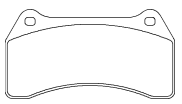
144.8 x 75.2

2355701 Th. 17.2
23557 172 1 4
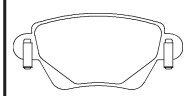
115.6 x 51.7

2390801 Th. 17.8
23908 178 1 4
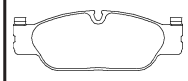
164.4 x 58

2407901 Th. 18.7
24079 187 0 5
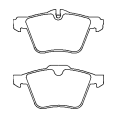
155.2/156.4 x 75.1/74.4

2407903 /20.2
24079 202 0 5
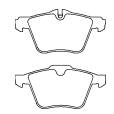
155.2/156.4 x 75.1/74.4

2408401 Th. 19
24084 190 0 5 T4136
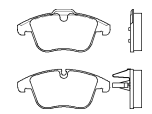
156/156.2 x 66.6/72

2408403 Th. 19
24084 190 0 5 T4394
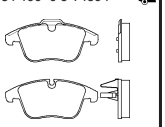
156/156.2 x 66.6/72

2413701 Th. 16.7
24137 167 0 5
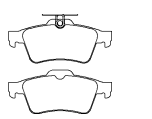
123.2 x 51.9

2413781 Th. 16.7
24137 167 0 5 epad
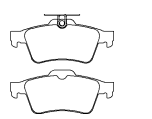
123.2 x 51.9

2419001 Th. 16.5
24190 165 1 4
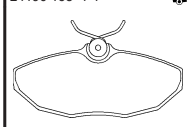
112.9 x 48.8

2426001 Th. 16.3
24260 163 1 4

101.7 x 50.4

2432801 Th. 20.8
24328 208 0 5
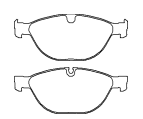
193 x 78.9

2447401 /17.8
24474 178 0 5
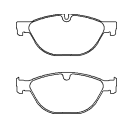
192.8/192.9 x 79.3/79.2

2448701 Th. 16
24487 166 0 5
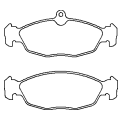
140.3 x 58/48

2485001 Th. 16.6
24850 166 0 4

152 x 62.5

2485101 Th. 15.6
24851 156 0 4

131.9 x 64

2511401 Th. 16.2
25114 162 0 5

121.9 x 64.2

2580301 /18.7
25803 187 0 5
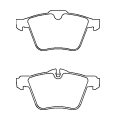
155.8/155.2 x 74.2/75.1

JEEP

2182001 Th. 15.5
21820 155 0 5
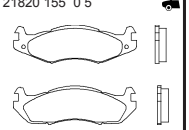
176.8 x 54.9/54.9

2182202 Th. 17.2
21822 172 0 5
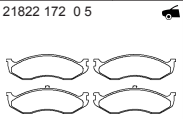
177 x 54.3

2333901 Th. 17.1
23339 171 0 5
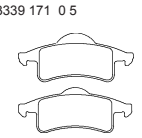
141.3/139.4 x 59.2/55.7

2358202 Th. 15.5
23582 155 1 5
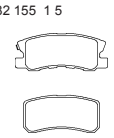
111.3/91 x 45/45

2358403 Th. 16
23584 160 1 4 T4361
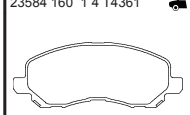
145.1 x 55.1

2363101 Th. 17.8
23631 178 0 5
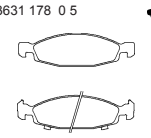
192.3/194.3 x 55.3

2363801 Th. 17.5
23638 175 0 5
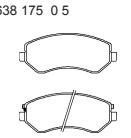
146.7 x 59.7

2401401 Th. 15.4
24014 154 1 5
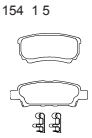
85.4/105.8 x 39.8/35.2

2407501 Th. 17
24075 170 0 4
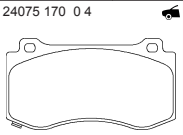
141.8 x 76

2407601 Th. 14.8
24076 148 0 4
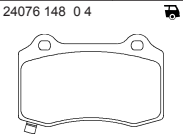
109.8 x 69.2

2408301 Th. 19.2
24083 192 1 4
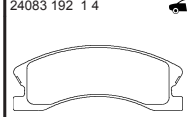
157.7 x 60.5

2425001 Th. 18.6
24250 186 0 5
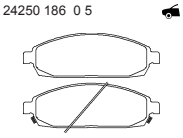
175.8 x 57

2425801 Th. 17.9
24258 179 0 5

142.5 x 52.2/49.3

2435501 Th. 14
24355 140 0 5

140.5 x 49.3

2450601 Th. 14.8
24506 148 0 5

143 x 45.2

2458301 Th. 17
24583 170 1 4
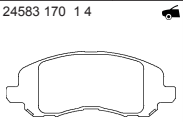
145.1 x 55

2460201 Th. 16
24602 160 1 5
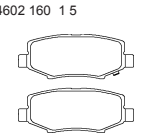
116.2 x 45.4

2460401 Th. 18.5
24604 185 1 5
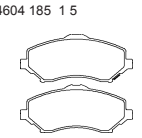
146.6 x 63.4

2460402 Th. 17.5
24604 175 1 5
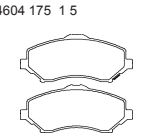
146.6 x 63.4

2519001 Th. 21.3
25190 213 0 5
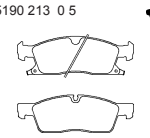
194.3/193.1 x 64/63.9

2519002 Th. 19
25190 190 0 5
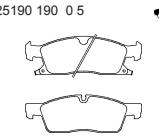
194.3/193.1 x 64/63.9

2519601 Th. 18
25196 180 0 5

141.4/140.1 x 59.6/51.8

2584901 Th. 16.2
25849 162 1 5

189.5 x 92.9

JEEP (BJC)

2182202 Th. 17.2
21822 172 0 5

177 x 54.3

2333901 Th. 17.1
23339 171 0 5

141.3/139.4 x 59.2/55.7

KIA

2000201 Th. 15	2135501 Th. 14.5	2155301 Th. 14	2165404 Th. 15	2172501 Th. 17	2182202 Th. 17.2	2183201 Th. 15
20002 150 0 5	21355 145 0 5	21553 140 0 5	21654 153 1 5	21725 170 0 5	21822 172 0 5	21832 150 0 4
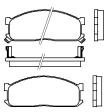	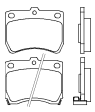	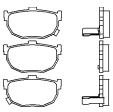	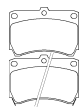	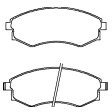	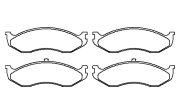	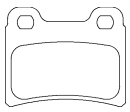
133.1 x 52.1	78.8 x 63.3	85.3 x 46.5	91.6 x 64	137 x 54	177 x 54.3	61.7 x 51

2189202 Th. 18.4	2338401 Th. 18	2341703 Th. 15.2	2344201 Th. 16	2345001 Th. 18.3	2345501 Th. 13	2348401 Th. 17
21892 184 0 5	23384 180 0 5	23417 152 1 5	23442 160 0 5	23450 183 0 5	23455 130 0 5	23484 170 0 5
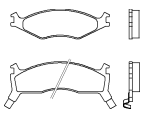	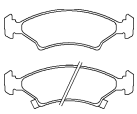	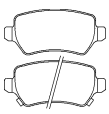	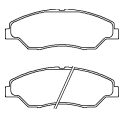	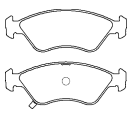	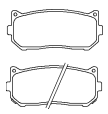	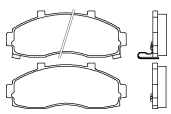
164.9/172.2 x 49.4/67.8	151.5 x 47.6	95.5 x 42.8	148.9 x 52.8	151.5 x 52.6	98.7 x 41.6	154 x 58.4

2354301 Th. 15	2360801 Th. 15	2364901 Th. 16.2	2372601 Th. 16.5	2378401 Th. 15.5	2387301 Th. 15	2389101 Th. 16.9
23543 150 0 5	23608 150 0 5	23649 162 0 5	23726 165 0 5	23784 155 0 5	23873 150 0 5	23891 169 0 5
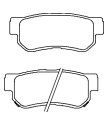	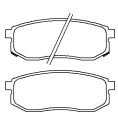	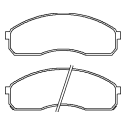	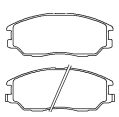	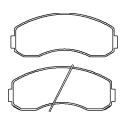	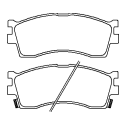	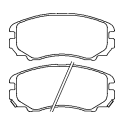
98.6 x 41	103 x 39.3	154.2 x 56.2	149.1 x 61	154.1 x 63.6	129 x 51.4	131.6 x 59.9

2389105 Th. 17.8	2393101 Th. 15	2396601 Th. 16.4	2405801 Th. 15.8	2406801 Th. 17.3	2409201 Th. 17.3	2421801 Th. 17.2
23891 178 1 5	23931 150 0 5	23966 164 0 5	24058 158 0 5	24068 173 0 5	24092 173 0 5	24218 172 0 5
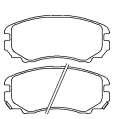	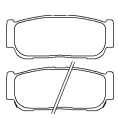	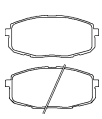	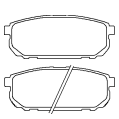	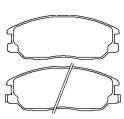	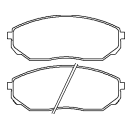	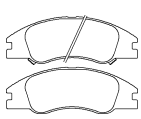
131.6 x 59.9	118.5 x 48.1	130.1 x 58.1	118.2 x 46.8	149 x 58.9	155.1 x 60	165 x 59.1

2427501 Th. 16.8	2427601 Th. 14.8	2431701 Th. 17.5	2432001 Th. 15.9	2435101 Th. 17.6	2449101 Th. 16	2450101 Th. 16.6
24275 168 0 5	24276 148 0 5	24317 175 0 5	24320 159 0 5	24351 176 0 5	24491 160 0 5	24501 166 0 5
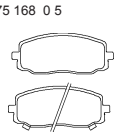	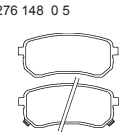	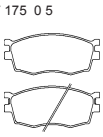	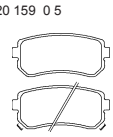	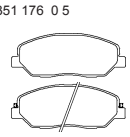	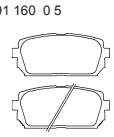	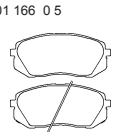
116.2 x 47.4	92.5 x 41	129.8 x 56	93.1 x 41.1	156.9 x 60.9	100.6 x 43.9	137.7 x 60.8

2456501 Th. 16.2	2458601 Th. 17.8	2459701 Th. 17.6	2459901 Th. 15.5	2491501 Th. 17.3	2493401 Th. 15.5	2518401 Th. 19.4
24565 162 0 5	24586 178 1 5	24597 176 1 5	24599 155 1 5	24915 173 1 5	24934 155 1 5	25184 194 1 5
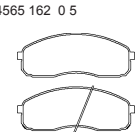	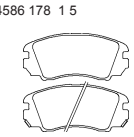	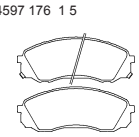	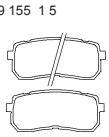	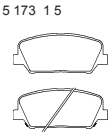		
154.4 x 58.2	131.6 x 59.9	164.6 x 63.4	110.4 x 47.8	140.7 x 59.9	99.9 x 41	131.4 x 60.6

2520501 Th. 17.5	2529201 Th. 15.9	2533701 Th. 15.7	2534801 Th. 17.8	2536501 Th. 16.6	2537401 Th. 18.3	2552001 Th. 15.5
25205 175 1 5	25292 159 1 5	25337 157 1 5	25348 178 1 5	25365 166 1 5	25374 184 0 5	25520 155 1 5
137.7 x 60.8	93.1 x 41.1	99.7 x 40.9	132.7 x 58	111 x 47.5	151.2 x 46.5	116.8 x 48.3

2564401 Th. 17.7	2564701 Th. 15.7	2567701 Th. 15.9	2575701 Th. 17.8
25644 177 1 5	25647 157 1 5	25677 159 1 5	25757 178 1 5
132.6 x 58.6	99.7 x 40.9	93.1 x 41.1	132.7 x 59.7

KIA (DYK)

2155301 Th. 14
21553 140 0 5
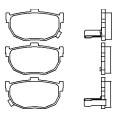
85.3 x 46.5

2354301 Th. 15
23543 150 0 5
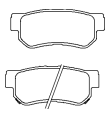
98.6 x 41

2364901 Th. 16.2
23649 162 0 5
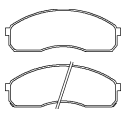
154.2 x 56.2

2389101 Th. 16.9
23891 169 0 5
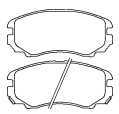
131.6 x 59.9

2396601 Th. 16.4
23966 164 0 5
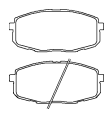
130.1 x 58.1

2421801 Th. 17.2
24218 172 0 5
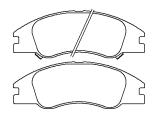
165 x 59.1

2432001 Th. 15.9
24320 159 0 5
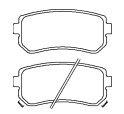
93.1 x 41.1

2493401 Th. 15.5
24934 155 1 5
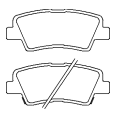
99.9 x 41

LADA

2016603 Th. 16
20166 160 0 4
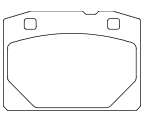
83.9 x 60.5

2066001 Th. 15.6
20660 156 0 4

125.9 x 45

2117002 Th. 17
21170 170 1 4
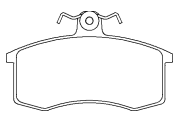
104.4 x 62.1

2146304 Th. 18.2
21463 182 3 4
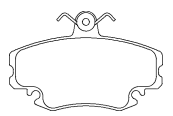
99.9 x 64.8

2367101 Th. 17
23671 170 1 4
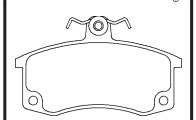
104.3 x 62.1

2397601 Th. 16
23976 160 0 4
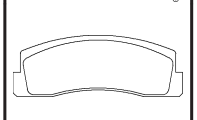
126.1 x 45

2467301 Th. 18
24673 180 0 5
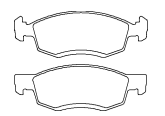
151.3/150.1 x 52.5

LANCIA

2026101 Th. 19.3
20261 193 1 5
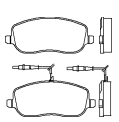
146.6 x 59.9

2083302 Th. 17.1
20833 171 2 5
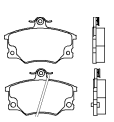
103.8 x 66.6

2096110 Th. 17.4
20961 174 1 4
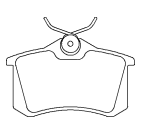
87 x 53

2110005 Th. 17
21100 170 2 5
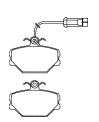
89.9 x 63.4

2110701 Th. 12
21107 120 0 4
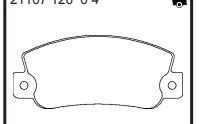
109 x 47.5

2127501 Th. 16.9
21275 169 1 5 T4067
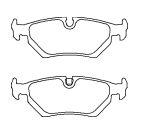
123 x 43

2143602 Th. 17
21436 170 0 4
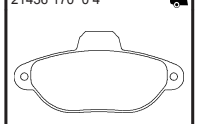
114.8 x 55.2

2143603 Th. 17
21436 170 1 4
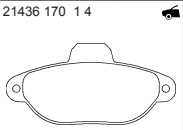
114.8 x 55.2

2160601 Th. 16.6
21606 166 2 4
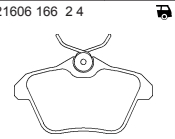
90 x 50

2180101 Th. 19.3
21801 193 2 5
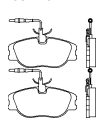
129.9 x 59.5

2192701 Th. 17.9
21927 179 0 5
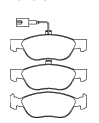
156.3 x 52.6

2193002 Th. 17.9
21930 179 0 5
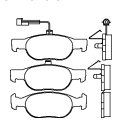
151.3 x 52

2309201 Th. 16
23092 160 0 5
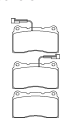
131.6 x 77.2

2314002 Th. 19.3
23140 193 0 5
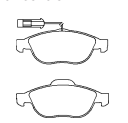
155.1/156.3 x 59.1/63.8

2314101 Th. 19.3
23141 193 0 5
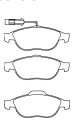
155.1/156.5 x 59.1/63.8

2316803 Th. 19.3
23168 193 2 5
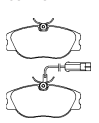
130.1 x 58.7

2317703 Th. 14.4
23177 144 1 4
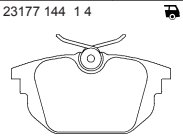
87.2 x 44.6

2318101 Th. 17.9
23181 179 0 5
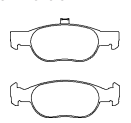
151.5 x 52

2322901 Th. 18
23229 180 0 5
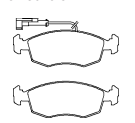
151.4 x 52.5

2328902 Th. 19
23289 190 0 5
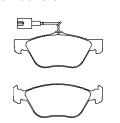
155.1/155.1 x 61.7/58.9

2351703 Th. 16.5
23517 165 1 4
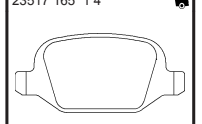
95.5 x 43.9

2357501 Th. 16
23575 160 0 5
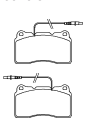
131.6 x 77.2

2358202 Th. 15.5
23582 155 1 5
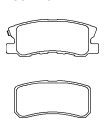
111.3/91 x 45/45

2358403 Th. 16
23584 160 1 4 T4361
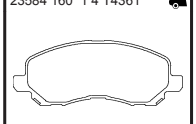
145.1 x 55.1

2360102 Th. 13.7
23601 137 1 4
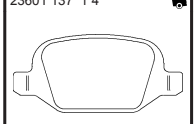
95.6 x 43.9

2370502 Th. 17.8
23705 178 1 5

122.8 x 53.3

2370503 Th. 17.8
23705 178 1 4

122.8 x 53.3

2370581 Th. 17.8
23705 178 1 5 epad

122.8 x 53.3

2370802 Th. 19
23708 182 1 5

137 x 57.4

2370803 Th. 19
23708 182 1 4

137 x 57.5

2370881 Th. 19
23708 182 1 5 epad

137 x 57.4

2371102 Th. 18.2
23711 182 1 5

151 x 57.5

2371104 Th. 19.4
23711 194 1 5

150.8 x 57.4

2371401 Th. 15.5
23714 155 1 4

94.8 x 42.9

2371403 Th. 17.2
23714 172 1 5

94.8 x 42.9

LANCIA

2371481 Th. 15.5
23714 155 1 4 epad

94.8 x 42.9

2375701 Th. 16
23757 160 0 5
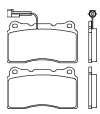
131.8 x 77.2

2376001 Th. 17.8
23760 178 1 4
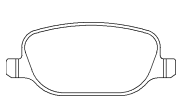
116.7 x 50

2376002 Th. 17.8
23760 178 2 4

116.7 x 50

2376101 Th. 18.8
23761 188 1 4
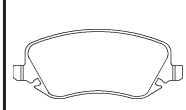
146.7 x 59.5

2407301 Th. 16.4
24073 164 1 4
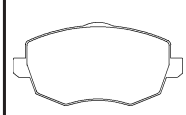
116.7 x 55

2407302 Th. 16.4
24073 164 2 4
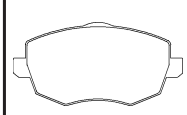
116.7 x 55

2407303 Th. 16.4
24073 164 1 5
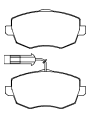
116.8 x 55

2407304 Th. 16.4
24073 164 2 5
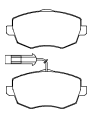
116.7 x 55

2416301 Th. 17.8
24163 178 0 4

101.2 x 57.5

2416401 Th. 17.8
24164 178 0 4

183.4 x 54.9

2427801 Th. 19.2
24278 192 1 5
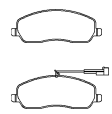
162.7 x 59.3

2472701 Th. 20
24727 200 0 5
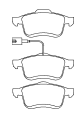
156.3/155.1 x 71.5/69

2483901 Th. 19.4
24839 194 1 5
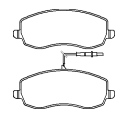
162.5 x 63.7

2532301 Th. 17.3
25323 173 0 5
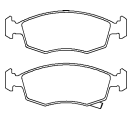
149.3 x 52.5

2537601 Th. 17.6
25376 176 1 5
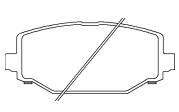
130 x 54.7

2537801 Th. 18.1
25378 181 1 5
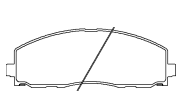
183 x 63.2

2560501 Th. 18.1
25605 181 1 5
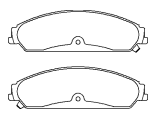
183.4 x 54.9

LAND ROVER

2021701 Th. 17.3
20217 173 0 4
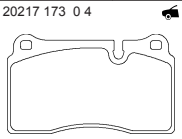
131.6 x 77.3

2034402 Th. 15
20344 150 0 4

88.7 x 72.1

2145901 Th. 18.5
21459 185 0 4
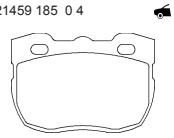
104.9 x 72.4

2148701 Th. 17.2
21487 172 0 5 T4183
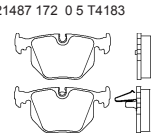
123.2 x 59.2

2148703 Th. 17.2
21487 172 0 5 T4126
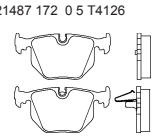
123.2 x 59.2

2148781 Th. 17.2
21487 172 0 4 epad
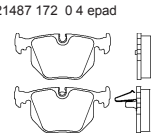
123.2 x 59.2

2151503 Th. 18
21515 180 1 5
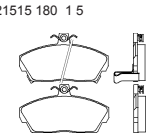
129.2 x 69.7

2151504 Th. 18
21515 180 1 4
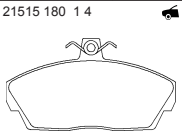
129.2 x 69.7

2151901 Th. 18
21519 180 0 4
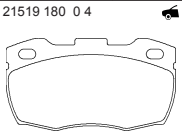
126.5 x 68.6

2339703 Th. 19.4
23397 194 0 5
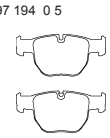
156.3/155.1 x 73.2/73.2

2345201 Th. 19
23452 190 1 4
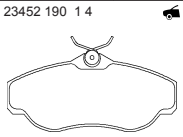
144.8 x 66.3

2345801 Th. 15
23458 150 1 4
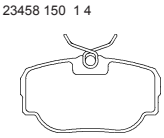
94.7 x 52.4

2347101 Th. 15
23471 150 0 4
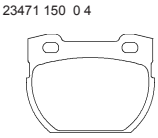
86.4 x 68.7

2347103 Th. 17.9
23471 179 0 4
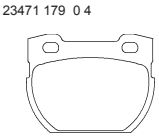
86.4 x 68.7

2361501 Th. 17.5
23615 175 0 4
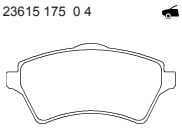
131.6 x 62.3

2412301 Th. 20.3
24123 203 0 5
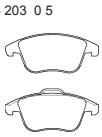
155.1/156.3 x 66.6/72

2412305 Th. 20.3
24123 203 9 5

155.1/156.3 x 66.6/72

2419101 Th. 18.1
24191 181 1 4
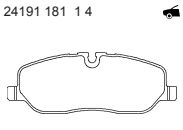
162.9 x 58.7

2419181 Th. 18.1
24191 181 1 4 epad
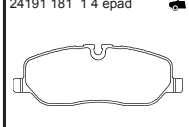
162.9 x 58.7

2419201 Th. 17.3
24192 173 1 4

116.9 x 46.3

2419204 Th. 17.3
24192 173 2 4

116.9 x 46.3

2419281 Th. 17.3
24192 173 1 4 epad
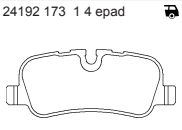
116.9 x 46.3

2419282 Th. 17.3
24192 173 2 4 epad

116.9 x 46.3

2449602 Th. 16.9
24496 169 2 4

106.7 x 48.8

2453701 Th. 15.7
24537 157 1 4

95.4 x 43.2

2453702 Th. 15.7
24537 157 2 4

95.4 x 43.2

2465901 Th. 16.9
24659 169 0 4

189.7 x 95.5

2502101 Th. 18.6
25021 186 1 5

192.6 x 72.1

2502201 Th. 18.6
25022 186 1 5

192.6 x 72.1

2508501 Th. 17.1
25085 171 1 4

116.7 x 62.9

2572001 Th. 17.3
25720 173 1 4

131.3 x 58.4

LANDWIND (JMC)

2154302 Th. 16.5	2194701 Th. 15	2381301 Th. 15.8	2424601 Th. 17
21543 165 0 5	21947 150 0 4	23813 158 0 5	24246 170 0 5
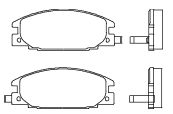		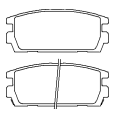	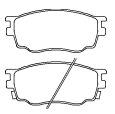
127.3 x 49.3	115.9 x 43.9	110.3 x 46.5	131.2 x 56

LDV

2035908 Th. 18	2090401 Th. 18	2148101 Th. 15.7	2337001 Th. 15	2435801 Th. 18.4
20359 180 1 4	20904 180 0 4	21481 157 1 4	23370 150 0 5	24358 184 1 5
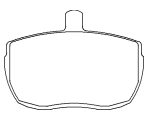	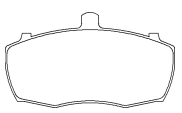	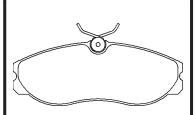	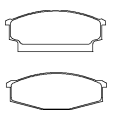	
104.9 x 74.7	126.7 x 71.2	144.8 x 55	142 x 58.5/53	168.6 x 60.2

LEXUS

2032501 Th. 17.5	2149001 Th. 17.1	2149101 Th. 15.5	2178601 Th. 15.5	2179101 Th. 17	2183301 Th. 15.5	2194701 Th. 15
20325 175 0 5	21490 171 0 5	21491 155 0 5	21786 155 0 5	21791 170 0 4	21833 155 0 5	21947 150 0 4
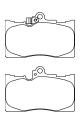	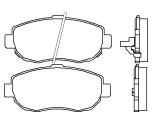	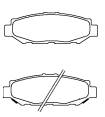	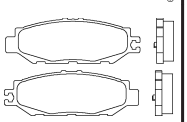	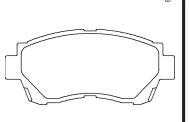	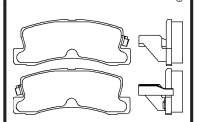	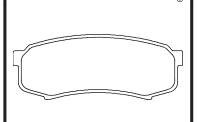
118.6 x 77.5	144.3 x 63.8	122.2 x 40.9	122 x 41	141 x 62.5	107.6 x 42.5	115.9 x 43.9

2333102 Th. 16	2342901 Th. 15	2349901 Th. 17	2351302 Th. 17	2352402 Th. 17.7	2353902 Th. 17.5	2359201 Th. 15
23331 160 0 4	23429 150 0 4	23499 170 0 4	23513 170 1 4	23524 177 0 5	23539 175 0 4	23592 150 0 4
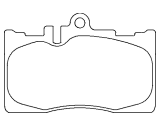	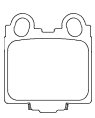	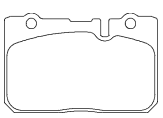	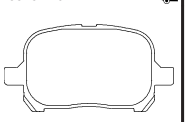	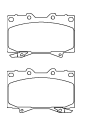		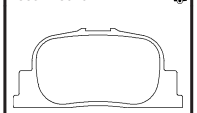
118.4 x 77.7	57.2 x 63.6	115.8 x 74.6	116.7 x 59.5	119.5 x 78	123.1 x 45.1	82.6 x 38.5

2370201 Th. 15.8	2370301 Th. 18.5	2373401 Th. 17	2380401 Th. 15	2385501 Th. 16	2392901 Th. 17	2396701 Th. 15.2
23702 158 0 4	23703 185 1 4	23734 170 0 4	23804 150 0 4	23855 160 0 4	23929 170 0 4	23967 152 0 4
	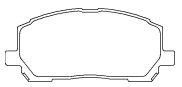	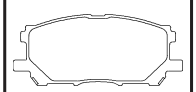	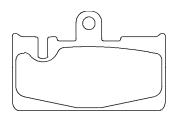		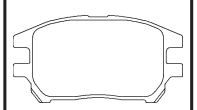	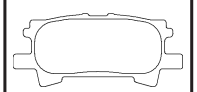
92.9 x 37.8	138.8 x 59.3	140.7 x 59.4	96.1 x 62.1	143.4 x 58.5	114.8 x 59.5	101.8 x 44.3

2398301 Th. 17.8	2402401 Th. 17.8	2402403 Th. 17	2424401 Th. 18.5	2424501 Th. 18.5	2430701 Th. 16.3	2432301 Th. 15.5
23983 178 0 4	24024 178 0 5 T4361	24024 170 0 5 T4146	24244 185 0 4	24245 185 0 4	24307 163 0 5	24323 155 0 5
	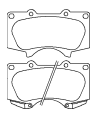	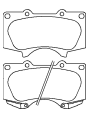	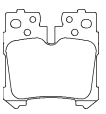	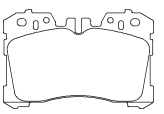	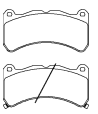	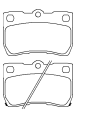
154.6 x 59.5	134.5 x 77.1	134.5 x 77	75.2 x 76.5	133.8 x 88	164.5 x 81.5	88.1 x 58

2433601 Th. 17.5	2433801 Th. 15.4	2435001 Th. 17.6	2440101 Th. 17.5	2445101 Th. 15.6	2445201 Th. 17.5	2465301 Th. 17.4
24336 175 0 4	24338 154 0 4	24350 176 0 4	24401 175 0 5	24451 156 0 4	24452 175 1 4	24653 174 0 4
						
139.2 x 55.9	96.8 x 49.2	157.7 x 56.9	101.5 x 73	122.8 x 49.6	166.6 x 59.4	116.2 x 44.8

2489201 Th. 18	2491801 Th. 15	2496501 Th. 17.5	2501601 Th. 14.3	2552501 Th. 16.8
24892 180 0 5	24918 150 0 4	24965 175 0 5	25016 143 0 5	25525 168 0 4
143.9 x 68.6	115.1 x 45.6	118.6 x 77.5	98.5 x 42.4	115.1 x 45.6

LIFAN

2359201 Th. 15
23592 150 0 4
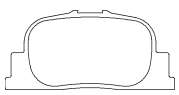
82.6 x 38.5

2390401 Th. 16.6
23904 166 0 5
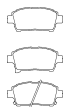
116.6/116.6 x 51.4/54.4

LIGIER

2473001 Th. 10.2
24730 103 0 5
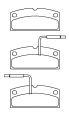
89.6 x 41.5

LINCOLN

2342301 Th. 17.8
23423 178 1 4
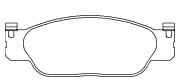
163.4 x 58

2342401 Th. 17.8
23424 178 1 4
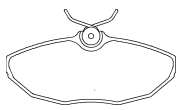
114.1 x 49.5

2454401 Th. 17.5
24544 175 1 4
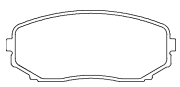
139.1 x 57.9

2454501 Th. 17.9
24545 179 0 4

110.4 x 45.9

2458101 Th. 15
24581 150 0 4
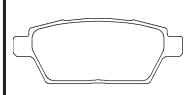
110.6 x 41.7

2458201 Th. 18.4
24582 184 0 4

136.9 x 58.8

2458202 Th. 18.4
24582 184 0 5
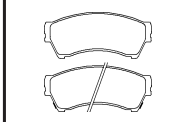
136.9 x 58.8

2475301 Th. 16.5
24753 165 0 5
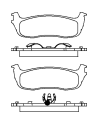
142.5 x 48.4

2475501 Th. 15.8
24755 158 0 4
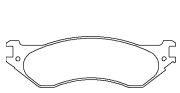
188.4 x 56.4

2475701 Th. 16.3
24757 163 0 5
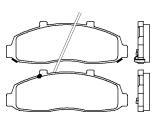
163.3 x 57.3

2476001 Th. 14.2
24760 142 0 5
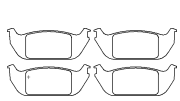
140.5 x 52.3

2477201 Th. 17.4
24772 174 0 4
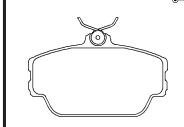
123.8 x 73.6

LOTUS

2032306 Th. 14.5
20323 145 0 4
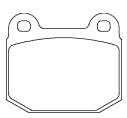
76.7 x 65.8

2034503 Th. 15.7
20345 157 0 4
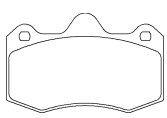
130.2 x 81.5

2041001 Th. 15
20410 150 0 5
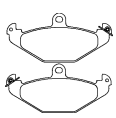
126.2 x 58.3

2041003 Th. 12.9
20410 129 0 5
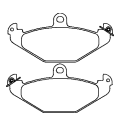
126.2 x 58.3

2559401 Th. 15.9
25594 159 0 4
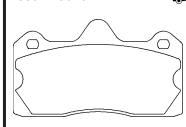
130 x 74

LTI

2116002 Th. 18
21160 180 0 5
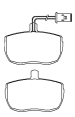
104.9 x 74.7

MARCOS

2098101 Th. 13.7
20981 137 1 4
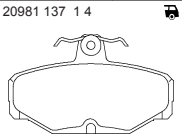
89.9 x 53.6

MARUTI

2073101 Th. 15.2
20731 152 0 4

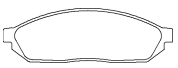

119.3 x 37.7

MARUTI SUZUKI

2350801 Th. 17
23508 170 0 5



108.3 x 45.3

MASERATI

2128201 Th. 17.3
21282 173 0 5

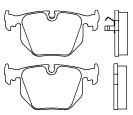

123 x 59.4

2315702 Th. 16
23157 160 0 4

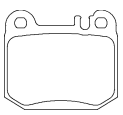

74.7 x 65.5

2315781 Th. 16
23157 160 0 4 epad

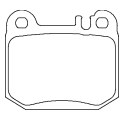

74.7 x 65.5

MAXUS (SAIC MOTOR)

2435801 Th. 18.4
24358 184 1 5

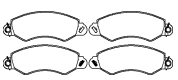

168.6 x 60.2

MAYBACH

2371501 Th. 18.6
23715 186 0 4

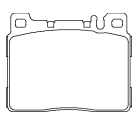

102 x 80.5

MAZDA

2000201 Th. 15
20002 150 0 5

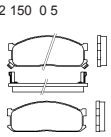

133.1 x 52.1

2000801 Th. 13
20008 130 0 4

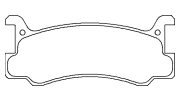

100.8 x 42.1

2003101 Th. 13
20031 130 0 4

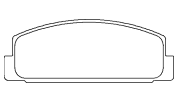

107.7 x 39.4

2131501 Th. 15.2
21315 152 0 5

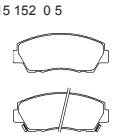

127.8 x 52.3

2131901 Th. 13
21319 130 0 5

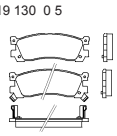

117 x 42.6

2153901 Th. 15
21539 150 0 5

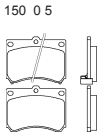

91.7 x 71

2157101 Th. 17.1
21571 171 1 4



141.9 x 59.5

2165404 Th. 15
21654 153 1 5

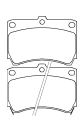

91.6 x 64

2176603 Th. 14.8
21766 137 1 4

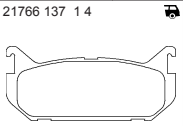

100 x 43.5

2310101 Th. 17.5
23101 175 0 5

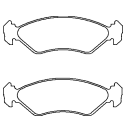

141.4 x 44.6

2310301 Th. 17.5
23103 175 0 5

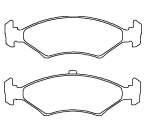

150.1 x 46.4

2320001 Th. 18.8
23200 188 0 5

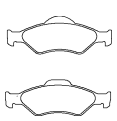

150.1/151.3 x 54.1/51.2

2335404 Th. 14
23354 136 1 4

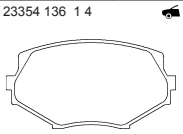

110.1 x 57.2

2338704 Th. 13.3
23387 133 1 5

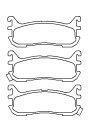

102.1 x 43

MAZDA

2347201 Th. 17	2348801 Th. 16	2349002 Th. 15	2351501 Th. 16	2354001 Th. 16.5	2360406 Th. 18.8	2367801 Th. 16
23472 170 0 5	23488 160 1 4	23490 150 1 4	23515 160 1 4	23540 165 1 4	23604 188 0 5	23678 160 1 4
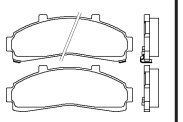		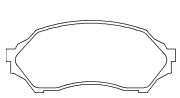	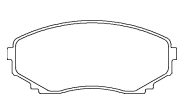	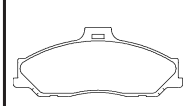	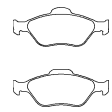	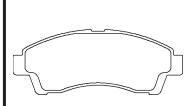
154 x 56.2	139 x 58.3	123 x 52	138.9 x 60.1	151.4 x 61.7	150.1/151.3 x 61/58.2	142.6 x 54.9

2372301 Th. 18.2	2372381 Th. 18.2	2377701 Th. 15	2378701 Th. 18.3	2384504 Th. 16.5	2386301 Th. 15	2387601 Th. 12
23723 182 0 5	23723 182 0 5 epad	23777 150 0 5	23787 183 0 5	23845 154 1 5	23863 150 0 4	23876 120 0 5
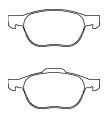	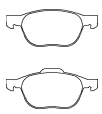	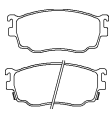	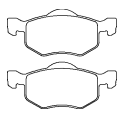	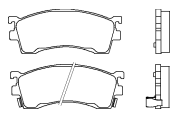	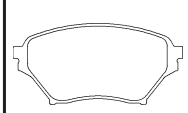	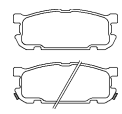
155.1/155.1 x 62.4/67	155.1/155.1 x 62.4/67	131.6 x 56.3	156.3 x 66.5	132 x 51.5	122.9 x 58.4	102.1 x 39.6

2391201 Th. 18.5	2400201 Th. 18.8	2402901 Th. 12.6	2403901 Th. 14.4	2404201 Th. 16.3	2404501 Th. 13	2404601 Th. 18.2
23912 185 0 5	24002 188 0 5	24029 126 0 5	24039 144 0 5	24042 163 0 4	24045 130 0 4	24046 182 0 5
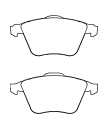	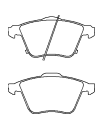	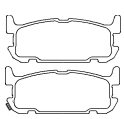	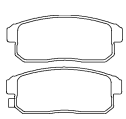	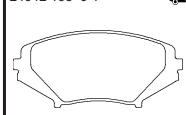	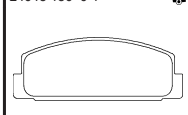	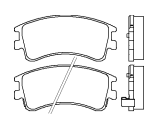
156.3/155.3 x 72.9	155.1/155.3 x 72.9/73.1	102.1 x 42.7	105.7 x 43	107.9 x 62	107.8 x 39.5	132 x 59.6

2413701 Th. 16.7	2413781 Th. 16.7	2421501 Th. 16	2424601 Th. 17	2428303 Th. 16.5	2429701 Th. 15	2429801 Th. 14
24137 167 0 5	24137 167 0 5 epad	24215 160 0 5	24246 170 0 5	24283 165 1 5	24297 150 1 4	24298 140 0 5
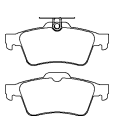	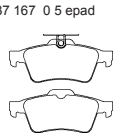	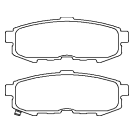	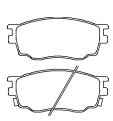	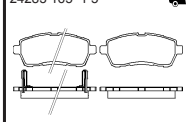		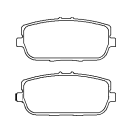
123.2 x 51.9	123.2 x 51.9	110.3 x 41.1	131.2 x 56	125.6 x 51.7	123.1 x 58.3	99.2 x 44.5

2435301 Th. 16.9	2443901 Th. 15	2454401 Th. 17.5	2454501 Th. 17.9	2458102 Th. 14.3	2458202 Th. 18.4	2467001 Th. 17.1
24353 169 0 5	24439 150 0 5	24544 175 1 4	24545 179 0 4	24581 143 0 4	24582 184 0 5	24670 171 0 5
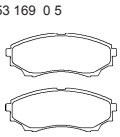	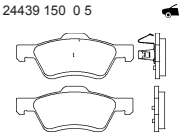	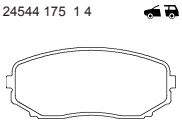	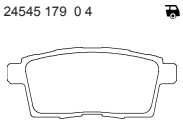	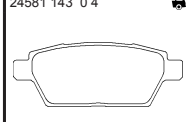	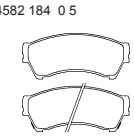	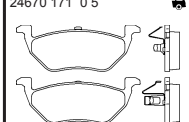
145.2 x 58.2	170.5 x 67.4	139.1 x 57.9	110.4 x 45.9	110.6 x 41.7	136.9 x 58.8	146 x 54.7

2554001 Th. 14.4	2556401 Th. 15.8	2563201 Th. 16.4	2568801 Th. 14.3	2572501 Th. 15.5
25540 144 0 5	25564 158 1 4	25632 164 1 5	25688 143 0 5	25725 155 1 4
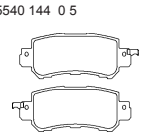	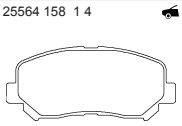	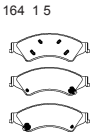	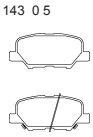	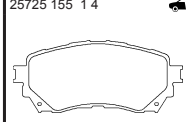
104.5 x 43	141.8 x 60.9	194.1 x 68.2	101.4 x 44.3	140.2 x 59.5

MAZDA (CHANGAN)

2428303 Th. 16.5	2521201 Th. 16.1	2521281 Th. 16.1
24283 165 1 5	25212 161 0 5	25212 161 0 5 epad
125.6 x 51.7	123 x 51.9	123 x 51.9

MAZDA (FAW)

2458101 Th. 15	2458202 Th. 18.4
24581 150 0 4	24582 184 0 5
110.6 x 41.7	136.9 x 58.8

MAZDA (HAINAN)

2384504 Th. 16.5	2404501 Th. 13
23845 154 1 5	24045 130 0 4
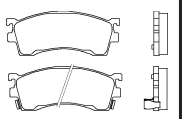	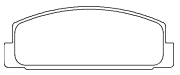
132 x 51.5	107.8 x 39.5

MEGA

2090603 Th. 18	2335801 Th. 18	2336101 Th. 15
20906 180 2 5	23358 180 0 5	23361 150 0 5
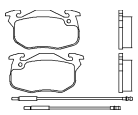	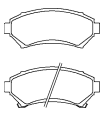	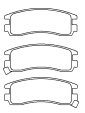
105 x 54.3	148.1 x 61.1	107.8 x 41

MERCEDES-BENZ

2068701 Th. 15.5	2078401 Th. 18	2115307 Th. 17.5	2119701 Th. 15	2130103 Th. 15.5	2130304 Th. 18.8	2130501 Th. 15.5
20687 155 0 4	20784 180 0 4	21153 175 0 4	21197 150 0 4	21301 155 0 4	21303 188 0 4	21305 155 0 4 T4023
	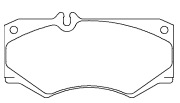	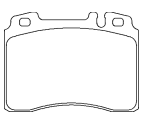	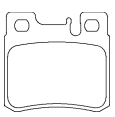	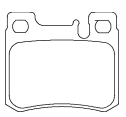	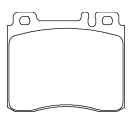	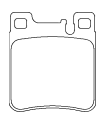
61.6 x 54.3	149 x 75	99.7 x 73.3	62.1 x 58.3	61.8 x 54.1	99.8 x 86	61.8 x 69.6

2130503 Th. 16	2130504 Th. 15.5	2130581 Th. 15.5	2143905 Th. 20.3	2148401 Th. 20.8	2157302 Th. 14	2166404 Th. 19.8
21305 160 0 4 T4210	21305 155 0 4 T4250	21305 155 0 4 epad	21439 203 2 4	21484 208 0 5	21573 140 1 5	21664 198 0 5
				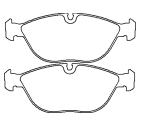	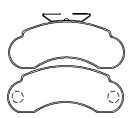	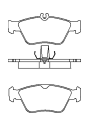
61.8 x 69.6	61.8 x 69.6	61.8 x 69.6	108.2 x 74.7	194.5 x 73.5	145.5 x 59	151.3 x 60/66.2

2166481 Th. 19.8	2167001 Th. 20.3	2167081 Th. 20.3	2189801 Th. 15.7	2189803 Th. 15.7	2189881 Th. 15.7	2190003 Th. 15.8
21664 198 0 5 epad	21670 203 0 5	21670 203 0 5 epad	21898 157 0 5 T4080	21898 157 0 5 T4209	21898 157 0 5 epad	21900 158 0 4
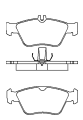	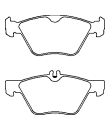	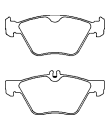	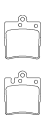	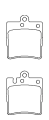	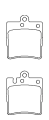	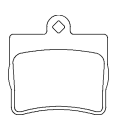
151.3 x 60/66.2	156.4/155.2 x 63.5/69.3	156.2/156.3 x 63.5/69.3	63.7 x 78.2	63.7 x 78.2	63.7 x 78.2	63.6 x 63.1

2190403 Th. 16.9	2191901 Th. 15.3	2191903 Th. 15.7	2191981 Th. 15.3	2302001 Th. 17.9	2302101 Th. 18.9	2302201 Th. 20.9
21904 169 0 5	21919 153 0 4 T4203	21919 157 0 4 T4271	21919 153 0 4 epad	23020 179 0 4	23021 189 0 4	23022 209 0 4
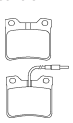	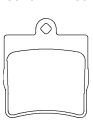	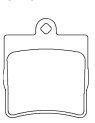	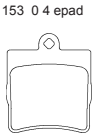	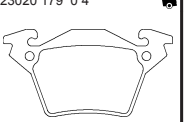	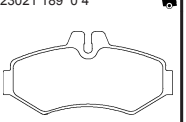	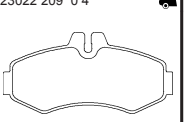
63.5 x 57.1	63.6 x 72.9	63.6 x 72.9	63.6 x 72.9	105 x 52.7	125.7 x 61.5	134.3 x 64.5

2307003 Th. 16.5	2307004 Th. 16.5	2307005 Th. 19	2307801 Th. 15.9	2307881 Th. 15.9	2313803 Th. 14.6	2313805 Th. 14.6
23070 165 1 4	23070 165 2 4	23070 190 2 4	23078 159 0 4	23078 159 0 4 epad	23138 146 1 4	23138 146 2 4
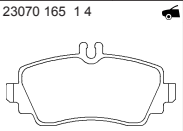	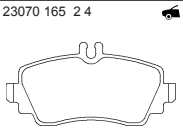	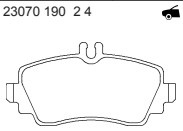	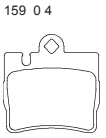	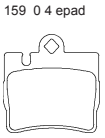	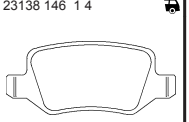	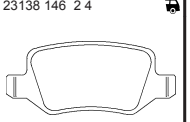
116.4 x 57.1	116.4 x 57.1	116.4 x 57.1	70.8 x 72	70.8 x 72	95.6 x 41.3	95.6 x 41.3

2314401 Th. 19.8	2314402 Th. 19.8	2314481 Th. 19.8	2314482 Th. 19.8	2315702 Th. 16	2315781 Th. 16	2318902 Th. 16.7
23144 198 1 5	23144 198 2 5	23144 198 1 5 epad	23144 198 2 5 epad	23157 160 0 4	23157 160 0 4 epad	23189 167 1 5
131.2 x 62/69.8	131.2 x 62/69.8	131.2 x 62/69.8	131.2 x 62/69.8	74.7 x 65.5	74.7 x 65.5	140.1 x 49.2

MERCEDES-BENZ

2319002 Th. 16.7	2319303 Th. 16.3	2327102 Th. 17.7	2327105 Th. 17.7	2327181 Th. 17.7	2328501 Th. 17.3	2333403 Th. 16.8
23190 167 1 5	23193 163 1 5	23271 177 0 5	23271 177 0 8	23271 177 0 5 epad	23285 173 0 4	23334 168 0 5
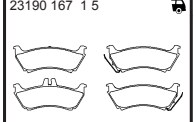	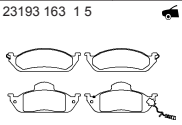	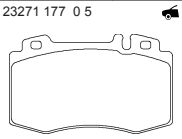	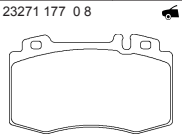	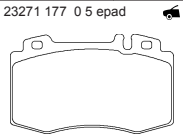	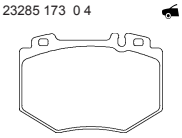	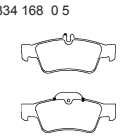
140.1/140.1 x 49.2/61	187.9 x 77.2/59.8	117.8 x 70.9	117.7 x 70.8	117.8 x 70.9	119.6 x 82.6	140.3/141.5 x 57.4/59.5

2333481 Th. 16.8	2347801 Th. 16.5	2347802 Th. 14.8	2374303 Th. 20.5	2374381 Th. 20.5	2374502 Th. 17.7	2374581 Th. 17.7
23334 168 0 5 epad	23478 165 0 4	23478 148 0 4	23743 205 2 5	23743 205 2 5 epad	23745 177 0 5	23745 177 0 5 epad
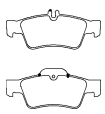	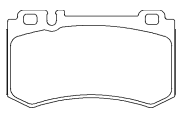	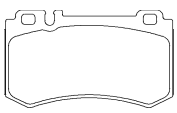	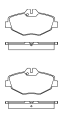	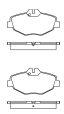	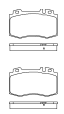	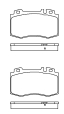
140.3/141.5 x 57.4/59.5	110 x 64	110 x 64	137 x 67.8	137 x 67.8	119.8 x 71.4	119.8 x 71.4

2388101 Th. 20.1	2390101 Th. 18.8	2392201 Th. 21	2392281 Th. 21	2392301 Th. 18	2392302 Th. 18	2392381 Th. 18
23881 201 1 5	23901 188 1 5	23922 210 0 5	23922 210 0 5 epad	23923 180 0 5 T4264	23923 180 0 5 T4564	23923 180 0 5 epad
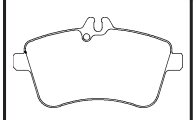	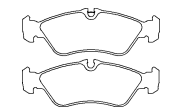	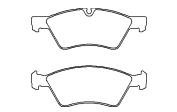	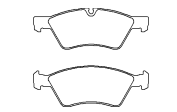	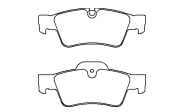	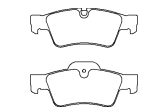	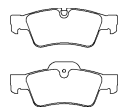
131.6 x 69.8	156.4 x 54.3	193.1/194.3 x 69.8/69.8	193.1/194.3 x 69.8/69.8	140.3/141.4 x 51.6/59.6	140.3/141.4 x 51.6/59.6	140.3/141.4 x 51.6/59.6

2394301 Th. 17.5	2394501 Th. 16.5	2395501 Th. 17.5	2396001 Th. 17.8	2396081 Th. 17.8	2397301 Th. 17.3	2399002 Th. 20.7
23943 175 0 5	23945 165 0 4	23955 175 0 4	23960 178 0 4	23960 178 0 4 epad	23973 173 1 4	23990 207 1 5
	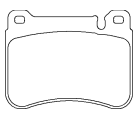	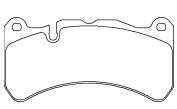	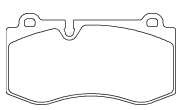	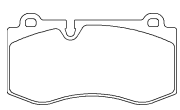	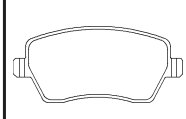	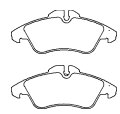
97.8 x 78.5	101.6 x 80	164.6 x 81.4	141.6 x 75.6	141.6 x 75.6	116.3 x 51.9	156.5 x 64.8

2400701 Th. 20.2	2400801 Th. 17.7	2407701 Th. 19	2407702 Th. 19	2415101 Th. 20.3	2415601 Th. 17.1	2417601 Th. 20.8
24007 202 1 4	24008 177 1 4	24077 190 1 4	24077 190 2 4	24151 203 0 5	24156 171 0 4	24176 208 0 5
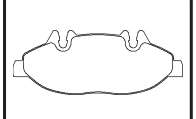	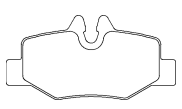	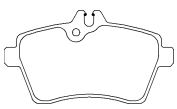	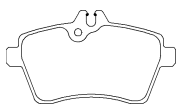	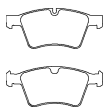	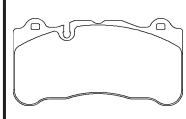	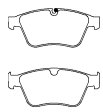
165 x 60.2	102 x 50.3	116.4 x 63.7	116.4 x 63.7	193.1 x 80.3	189.6 x 97.6	193.3 x 77

2418001 Th. 16.9	2425301 Th. 17.9	2425381 Th. 17.9	2425401 Th. 17.9	2425481 Th. 17.9	2430601 Th. 20.6	2430602 Th. 20.6
24180 169 0 5	24253 179 0 5	24253 179 0 5 epad	24254 179 0 5	24254 179 0 5 epad	24306 206 1 5 T4278	24306 206 2 5 T4278
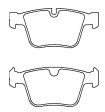	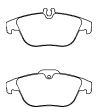	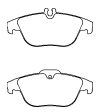	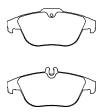	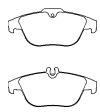		
141 x 61.7	122.7 x 54.3/52.2	122.7 x 54.3/52.2	122.7 x 54.3/52.2	122.7 x 54.3/52.2	146 x 71.5	146 x 71.5

2430603 Th. 20.6	2430681 Th. 20.6	2430682 Th. 20.6	2430901 Th. 17.6	2431001 Th. 19.4	2431081 Th. 19.4	2445501 Th. 16.9
24306 206 1 5 T4645	24306 206 1 5 epad	24306 206 2 5 epad	24309 176 1 4	24310 194 0 5	24310 194 1 5 epad	24455 169 0 4
146 x 71.5	146 x 71.5	146 x 71.5	203.1 x 88.7	188.3 x 73.3/80.3	188.3 x 73.3/80.3	189.6 x 93.2

2447301 Th. 14.8	2469204 Th. 16	2469301 Th. 18.7	2472201 Th. 19	2472281 Th. 19	2473301 Th. 15.3	2473901 Th. 17.3
24473 148 0 4	24692 160 2 4	24693 187 1 4	24722 190 0 5	24722 190 0 5 epad	24733 153 0 4	24739 173 1 5
109.7 x 75.9	95.3 x 43.9	131 x 62.1	155.1/156.5 x 69.3/63.5	155.1/156.5 x 69.3/63.5	109.7 x 75.9	141.3 x 46.5

2484801 Th. 18.4	2486701 Th. 20.2	2486781 Th. 20.2	2486901 Th. 19	2497601 Th. 17.5	2507101 Th. 18.8	2515803 Th. 19
24848 184 1 4	24867 202 1 5	24867 202 1 5 epad	24869 190 1 4	24976 175 0 4	25071 188 1 5	25158 190 0 5
106.4 x 58.9	165.1 x 68.2/79.4	165.1 x 68.2/79.4	144 x 71.5	141.4 x 79.8	116.2 x 65/54.7	192.9 x 74/76.7

MERCEDES-BENZ

2517901 Th. 17.8	2517903 Th. 17.5	2518301 Th. 17.8	2519201 Th. 19	2519202 Th. 21.3	2521501 Th. 18.7	2521502 Th. 18.7
25179 178 0 4	25179 175 0 4	25183 178 0 5	25192 190 0 5	25192 213 0 5	25215 187 1 5	25215 187 2 5
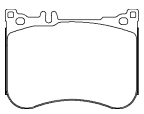	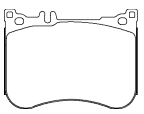	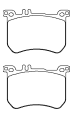	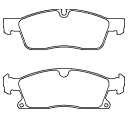	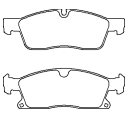	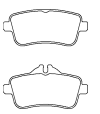	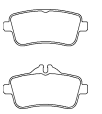
131.7 x 97.5	131.7 x 97.5	134.4 x 87.5	193.1/193 x 63.9/64	193.1/193 x 63.9/64	116.2 x 49.7/59.5	116.2 x 49.7/59.5

2521505 Th. 16.5	2521901 Th. 17.8	2521902 Th. 17.8	2532601 Th. 19.2	2553101 Th. 19.2	2553103 Th. 17.2	2915301 Th. 20
25215 165 1 5	25219 178 0 4	25219 178 9 4	25326 192 1 4	25531 192 0 5	25531 172 0 5	29153 200 1 4 T3011
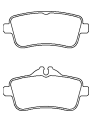	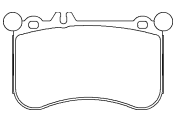	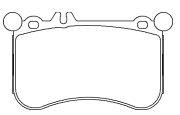	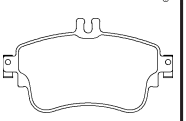	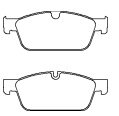	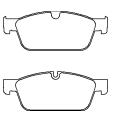	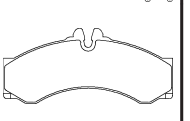
116.2 x 49.7/59.5	154 x 92.2	154 x 92.2	129 x 71.3	192.4/193.1 x 72/71.9	192.4/193.1 x 72/71.9	164.7 x 73

2919001 Th. 19	2919202 Th. 20.9	2920002 Th. 20.9	2921702 Th. 20.6	2923701 Th. 19.9	2983506 Th. 22
29190 190 1 5 T3035	29192 209 4 4 T3036	29200 209 2 4 T3036	29217 206 1 5 T3038	29237 199 1 4 T3018	29835 220 0 4 T3018
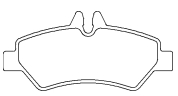	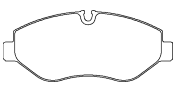	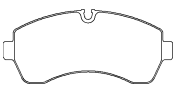	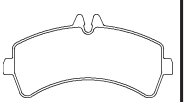	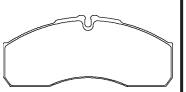	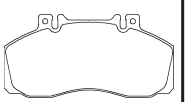
137 x 63	163.3 x 67.1	169.3 x 73.5	165 x 79	164.7 x 67.8	174.8 x 85.6

MERCEDES-BENZ (BBDC)

2333403 Th. 16.8	2333481 Th. 16.8	2374303 Th. 20.5	2374381 Th. 20.5	2374502 Th. 17.7	2374581 Th. 17.7	2425301 Th. 17.9
23334 168 0 5	23334 168 0 5 epad	23743 205 2 5	23743 205 2 5 epad	23745 177 0 5	23745 177 0 5 epad	24253 179 0 5
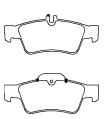	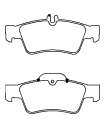	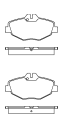	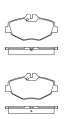	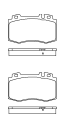	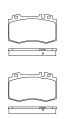	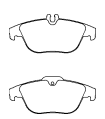
140.3/141.5 x 57.4/59.5	140.3/141.5 x 57.4/59.5	137 x 67.8	137 x 67.8	119.8 x 71.4	119.8 x 71.4	122.7 x 54.3/52.2

2425381 Th. 17.9	2425401 Th. 17.9	2425481 Th. 17.9	2430601 Th. 20.6	2430681 Th. 20.6	2431001 Th. 19.4	2431081 Th. 19.4
24253 179 0 5 epad	24254 179 0 5	24254 179 0 5 epad	24306 206 1 5 T4278	24306 206 1 5 epad	24310 194 0 5	24310 194 1 5 epad
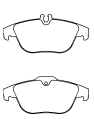	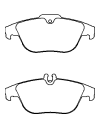	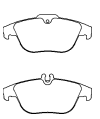	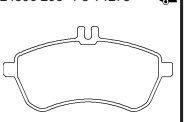	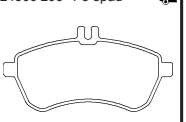	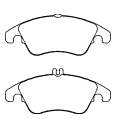	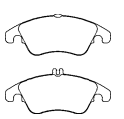
122.7 x 54.3/52.2	122.7 x 54.3/52.2	122.7 x 54.3/52.2	146 x 71.5	146 x 71.5	188.3 x 73.3/80.3	188.3 x 73.3/80.3

2486701 Th. 20.2	2486781 Th. 20.2
24867 202 1 5	24867 202 1 5 epad
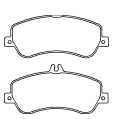	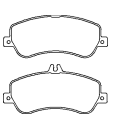
165.1 x 68.2/79.4	165.1 x 68.2/79.4

MERCEDES-BENZ (FJDA)

2400701 Th. 20.2	2400801 Th. 17.7	2919202 Th. 20.9
24007 202 1 4	24008 177 1 4	29192 209 4 4 T3036
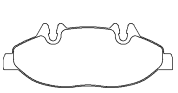	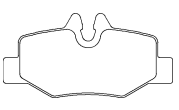	
165 x 60.2	102 x 50.3	163.3 x 67.1

MERCURY

2135803 Th. 19.8	2139408 Th. 18.5	2191003 Th. 19.8	2307104 Th. 18.5	2341007 Th. 15.7	2341008 Th. 15.7	2363701 Th. 17
21358 198 0 5	21394 185 0 5	21910 198 0 5	23071 185 1 5	23410 157 1 4	23410 157 1 5	23637 170 0 4
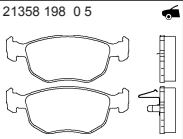						
156.3 x 58.6	155.1/156.3 x 58.5/58.5	156.4 x 58.6	155.1/156.5 x 58.5/58.5	116 x 53.6	116 x 53.6	123.9 x 66.5

MERCURY

2438101 Th. 14.6	2443901 Th. 15	2458002 Th. 17	2467001 Th. 17.1	2479901 Th. 16.9
24381 146 0 5	24439 150 0 5	24580 170 0 4 T4136	24670 171 0 5	24799 169 0 4
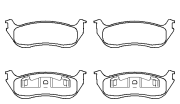	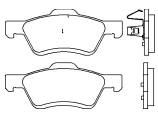	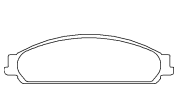	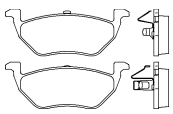	
140.5 x 49.3	170.5 x 67.4	182.4 x 52.6	146 x 54.7	116 x 52.3

METROCAB

2145901 Th. 18.5
21459 185 0 4
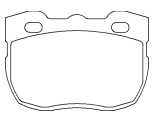
104.9 x 72.4

MG

2131201 Th. 13	2151503 Th. 18	2151801 Th. 17	2168202 Th. 14.5	2171901 Th. 14.6	2193402 Th. 17.3	2193481 Th. 17.3
21312 130 0 5	21515 180 1 5	21518 170 1 4	21682 145 1 5	21719 146 0 5	21934 173 0 5	21934 173 0 5 epad
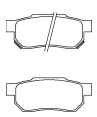	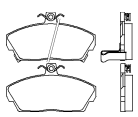	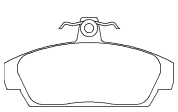	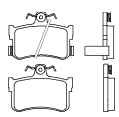	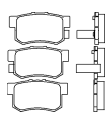	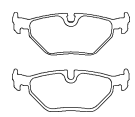	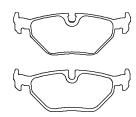
88.8 x 35.1	129.2 x 69.7	114.9 x 60.2	85.2 x 62.7	88.7 x 46.8	123 x 44.8	123 x 44.8

2309401 Th. 17	2311203 Th. 19.1	2318302 Th. 20.3	2318381 Th. 20.3	2367901 Th. 16.1
23094 170 0 5	23112 191 0 5	23183 203 0 5	23183 203 0 5 epad	23679 161 0 4
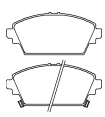	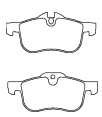	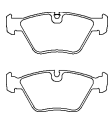	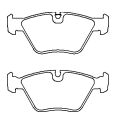	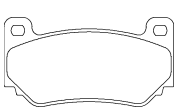
131.7 x 58.4	156.3/155 x 67.1/69.9	155.3/155.3 x 63.9/63.9	155.1/156.3 x 63.9/63.9	113.5 x 59.2

MINI

2328101 Th. 18.3	2328181 Th. 18.3	2391601 Th. 17.8	2398401 Th. 18	2398404 Th. 18	2404301 Th. 16.3	2404381 Th. 16.3
23281 183 0 5	23281 183 0 5 epad	23916 178 1 5	23984 180 1 5	23984 180 2 5	24043 163 0 5	24043 163 0 5 epad
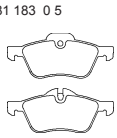	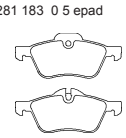	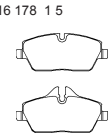	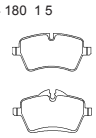	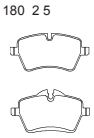	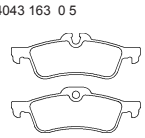	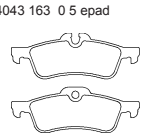
140.2 x 58.8	140.2 x 58.8	131.6/131.6 x 53.5/65	131.6 x 71.4/62.5	131.6 x 71.4/62.5	123.2 x 43.6	123.2 x 43.6

2428901 Th. 17	2431601 Th. 17	2447801 Th. 14.8	2547801 Th. 16.8
24289 170 1 5	24316 170 0 4	24478 148 0 4	25478 168 0 5
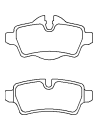	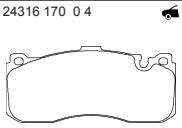	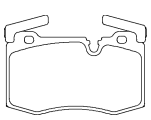	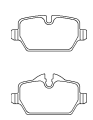
95.4 x 49/39	164.8 x 73.5	120.7 x 75.5	95.2 x 44.6/51

MITSUBISHI

2136301 Th. 15.7	2137001 Th. 15.7	2137301 Th. 16.5	2158001 Th. 14.3	2164701 Th. 16	2165001 Th. 15	2170602 Th. 15.5
21363 157 0 5	21370 157 1 4	21373 165 0 5	21580 143 0 5	21647 160 0 5	21650 150 1 4	21706 155 0 5
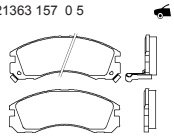	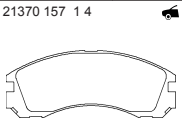	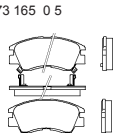	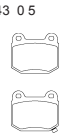	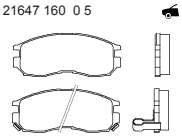	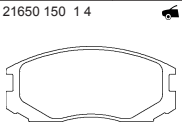	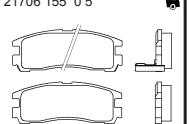
149.8 x 58.6	149.9 x 58.9	127.8 x 56.7	76.5 x 65.5	127.8 x 52.1	114 x 50	107.7 x 41

MITSUBISHI

2172501 Th. 17	2184002 Th. 14	2187202 Th. 14.5	2192001 Th. 15.1	2192003 Th. 17.4	2194701 Th. 15	2198302 Th. 17.3
21725 170 0 5	21840 140 0 5	21872 145 0 5	21920 151 1 4	21920 174 1 4	21947 150 0 4	21983 173 1 4
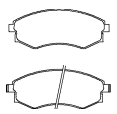	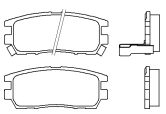	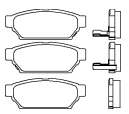	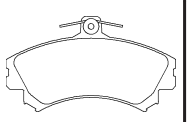	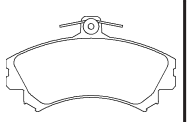	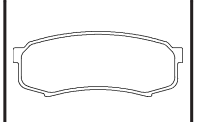	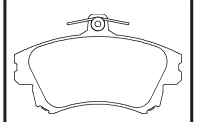
137 x 54	107.6 x 43.5	98.9 x 37.7	130 x 72.8	130 x 72.8	115.9 x 43.9	129.9 x 79.6

2198304 Th. 16.5	2308001 Th. 15.1	2308602 Th. 16	2309203 Th. 16	2309204 Th. 15	2323701 Th. 14.5	2329002 Th. 15.5
21983 165 1 4	23080 151 1 4	23086 160 0 5	23092 160 0 4	23092 150 0 5	23237 145 1 4	23290 155 1 4
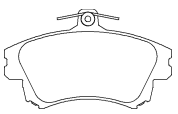	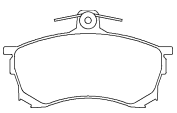	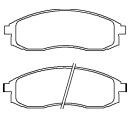	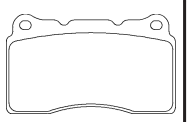	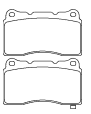	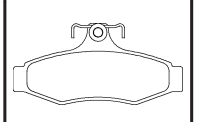	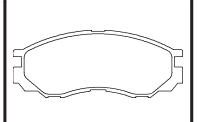
129.9 x 79.6	118.8 x 68.5	151.3 x 51.3	131.6 x 77.2	131.6 x 77.2	114 x 54.9	137.8 x 55

2337301 Th. 15	2348701 Th. 15.5	2348801 Th. 16	2349201 Th. 16.5	2350101 Th. 17.2	2351801 Th. 17	2354901 Th. 16.8
23373 150 0 5	23487 155 0 4	23488 160 1 4	23492 165 0 5	23501 172 0 5	23518 170 0 5	23549 168 1 5
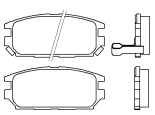	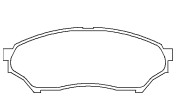	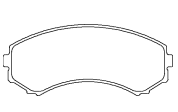	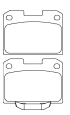	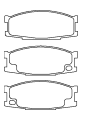	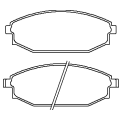	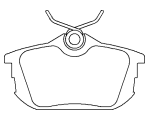
107.7 x 46	122.9 x 47.8	139 x 58.3	81.2 x 69/60	133.3/133.3 x 53/53.5	137 x 52.3	87.2 x 47.1

2358202 Th. 15.5	2358401 Th. 16	2358403 Th. 16	2359301 Th. 15	2360801 Th. 15	2387902 Th. 15.5	2401401 Th. 15.4
23582 155 1 5	23584 160 1 4 T4047	23584 160 1 4 T4361	23593 150 0 5	23608 150 0 5	23879 155 0 5	24014 154 1 5
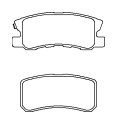	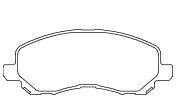	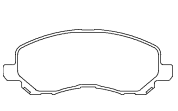	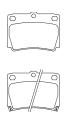	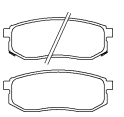	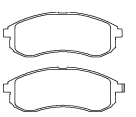	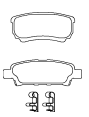
111.3/91 x 45/45	145.1 x 55	145.1 x 55.1	78.8 x 58.9	103 x 39.3	151.2 x 56.5	85.4/105.8 x 39.8/35.2

2402401 Th. 17.8	2422901 Th. 15.3	2428601 Th. 14.7	2429101 Th. 16	2442301 Th. 14.7	2442302 Th. 14.7	2452901 Th. 16
24024 178 0 5 T4361	24229 153 1 5	24286 147 0 5	24291 160 1 4	24423 147 0 4	24423 147 0 5	24529 160 0 5
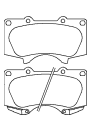	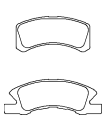	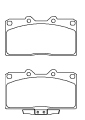	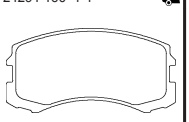	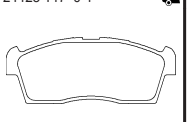	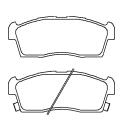	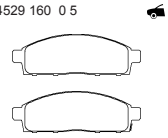
134.5 x 77.1	92.2/122.1 x 44.4	119.2 x 74.8/65.3	114.2 x 56.4	108.4 x 41.8	108.4 x 41.8	155.5 x 49

2482701 Th. 14.1	2527101 Th. 15.3	2527701 Th. 14.5	2568801 Th. 14.3	2924001 Th. 17.3	2924201 Th. 19.4	2924901 Th. 19.3
24827 141 0 5	25271 153 1 5	25277 145 0 5	25688 143 0 5	29240 173 0 5 T4136	29242 195 0 5 T4136	29249 193 0 5 T4136
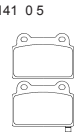	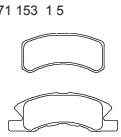	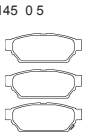	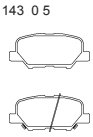	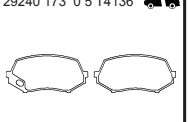		
86.6 x 63.6	92/122.1 x 44.2	98.8 x 37.6	101.4 x 44.3	123.1 x 56.6	125 x 60	139.2 x 58.9

MITSUBISHI (BBDC)

2136301 Th. 15.7	2401401 Th. 15.4
21363 157 0 5	24014 154 1 5
149.8 x 58.6	85.4/105.8 x 39.8/35.2

MITSUBISHI (BJC)

2329002 Th. 15.5	2348801 Th. 16	2358202 Th. 15.5	2358401 Th. 16
23290 155 1 4	23488 160 1 4	23582 155 1 5	23584 160 1 4 T4047
137.8 x 55	139 x 58.3	111.3/91 x 45/45	145.1 x 55

MITSUBISHI (GAC)

2358401 Th. 16
23584 160 1 4 T4047



145.1 x 55

MITSUBISHI (SOUEAST)

2358401 Th. 16
23584 160 1 4 T4047



145.1 x 55

MULTICAR

2915301 Th. 20
29153 200 1 4 T3011

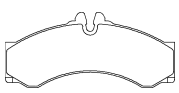

164.7 x 73

2920801 Th. 17
29208 170 0 4 T4136

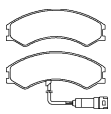

150 x 56.1

NAZA

2364901 Th. 16.2
23649 162 0 5

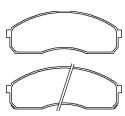

154.2 x 56.2

2427501 Th. 16.8
24275 168 0 5

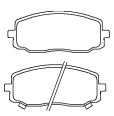

116.2 x 47.4

NISSAN

2109901 Th. 17
21099 170 0 4

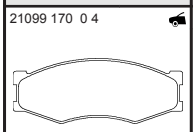

130 x 49.5

2109902 Th. 17
21099 170 0 5

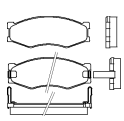

130 x 49.5

2112102 Th. 14
21121 140 0 5

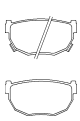

85.2/85.2 x 42.9/41.6

2117004 Th. 14.5
21170 170 1 4

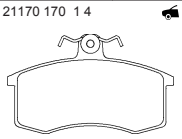

104.4 x 62.1

2130701 Th. 14.5
21307 145 0 5

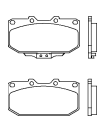

119.2/119.2 x 70.1/61.6

2134702 Th. 17
21347 170 0 5

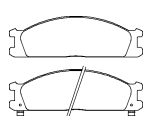

160.8 x 49.4

2138603 Th. 15
21386 150 0 4

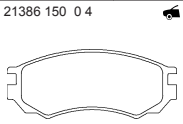

127.5 x 51.9

2138604 Th. 15
21386 150 0 5

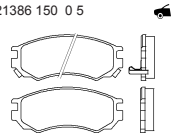

127.5 x 51.9

2146304 Th. 18.2
21463 182 3 4

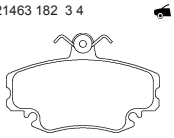

99.9 x 64.8

2146306 Th. 18.2
21463 182 1 4

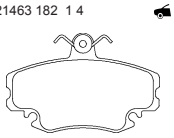

99.9 x 64.8

2148101 Th. 15.7
21481 157 1 4

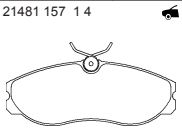

144.8 x 55

2152601 Th. 17
21526 170 0 5

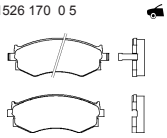

137/137 x 54.4/54.6

2154501 Th. 15.6
21545 156 1 4

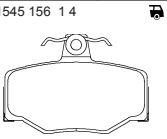

82.1 x 57.1

2154601 Th. 17.5
21546 175 0 4

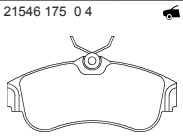

129 x 57.5

2156101 Th. 17
21561 170 0 5

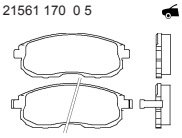

137.1 x 53

2156201 Th. 17
21562 170 0 5

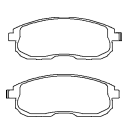

137.2 x 53

2158001 Th. 14.3
21580 143 0 5

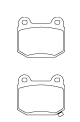

76.5 x 65.5

2162601 Th. 15.8
21626 158 0 4

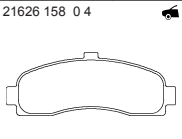

120.9 x 44.9

2171301 Th. 16.4
21713 164 0 5

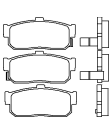

105.3 x 46.8

2171602 Th. 15.9
21716 159 0 5

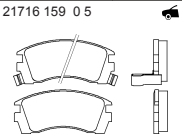

114.8 x 51.5

2173401 Th. 14
21734 140 0 5

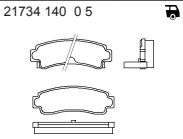

98.9/98.9 x 33.7/34.1

NISSAN

2185401 Th. 15	2198003 Th. 18	2300401 Th. 15.5	2300501 Th. 15.5	2302301 Th. 15	2308601 Th. 17	2309401 Th. 17
21854 150 0 4	21980 180 1 5	23004 155 0 5	23005 155 0 5	23023 150 0 5	23086 170 0 5	23094 170 0 5
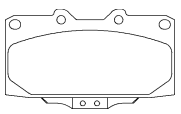	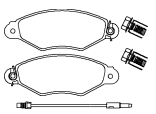		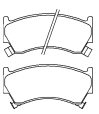	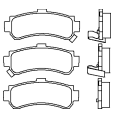	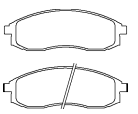	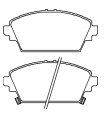
119.2 x 70	130.9 x 47.3	108.5 x 47	108.5 x 47	99.3 x 40	151.3 x 51.3	131.7 x 58.4

2309501 Th. 17	2309902 Th. 18.4	2314201 Th. 14.3	2316001 Th. 17.3	2318401 Th. 14.5	2342001 Th. 16.5	2343501 Th. 17.7
23095 170 0 4	23099 184 1 4	23142 143 0 5	23160 173 0 5	23184 145 0 5	23420 165 0 5	23435 177 1 5
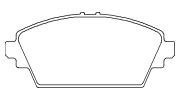	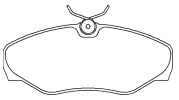	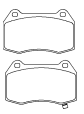	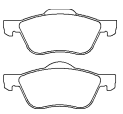	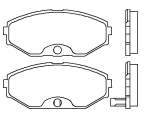	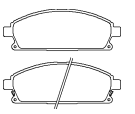	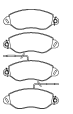
131.6 x 58.4	145.1 x 62.4	119.8 x 73.6	156.3 x 63.1	139.2 x 59.5	159 x 56.1	168.9 x 65

2345401 Th. 15	2346302 Th. 16.6	2348202 Th. 16.8	2350201 Th. 16	2350801 Th. 17	2355406 Th. 16.2	2361101 Th. 19
23454 150 0 4	23463 166 0 4	23482 168 0 5	23502 160 0 5	23508 170 0 5	23554 162 1 4	23611 190 0 5
	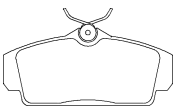		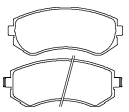			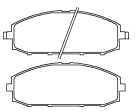
88.8 x 45.3	124 x 57.5	123 x 51.9	121.1 x 50.4	108.3 x 45.3	87 x 53	166.2 x 61.4

2361301 Th. 17.8	2366901 Th. 16.8	2369801 Th. 16	2369803 Th. 17	2387101 Th. 13.8	2392103 Th. 20.1	2397001 Th. 17
23613 178 0 4	23669 168 1 4	23698 160 0 5	25698 170 0 5	23871 138 0 5	23921 201 1 5	23970 170 0 5
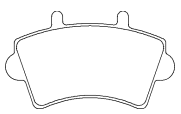			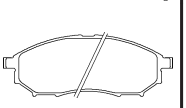	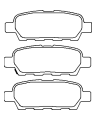	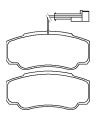	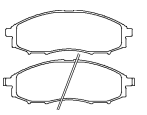
139 x 79.8	115.7 x 51.3	157.3 x 58.5	157.3 x 58.5	105.4 x 36.5	109.5 x 49.9	164.3 x 57

2397301 Th. 17.3	2398001 Th. 17	2405601 Th. 15.5	2410601 Th. 18	2411102 Th. 17.1	2422701 Th. 16.5	2422704 Th. 15.4
23973 173 1 4	23980 170 1 4	24056 155 0 5	24106 180 0 5	24111 171 0 5	24227 165 0 5	24227 154 0 5
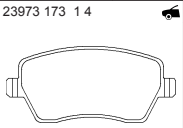	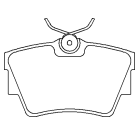	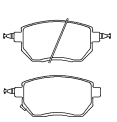	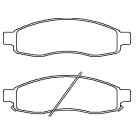	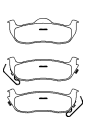	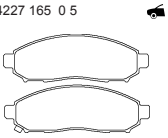	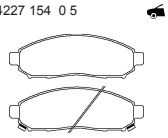
116.3 x 51.9	94.6 x 57.3	135.7 x 66	176 x 53.3	142.5 x 52.2/49	163.8 x 54.1	163.8 x 54.1

2424001 Th. 16	2425801 Th. 17.9	2428001 Th. 16	2440301 Th. 17.3	2458501 Th. 18	2463201 Th. 17	2464701 Th. 15.4
24240 160 0 5	24258 179 0 5	24280 160 1 5	24403 173 0 5	24585 180 0 4	24632 170 0 4	24647 154 0 5
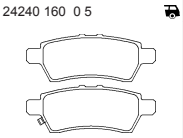		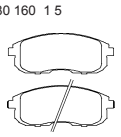	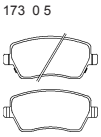	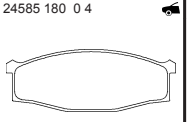		
110.5 x 41	142.5 x 52.2/49.3	137.2 x 53	116.4 x 52.5	142 x 51.7	142 x 58.7	134.9 x 48.4

2468201 Th. 14.2	2472401 Th. 14	2482501 Th. 15	2487101 Th. 13.8	2492101 Th. 13.5	2499401 Th. 15.9	2499501 Th. 13.8
24682 14,2 0 5	24724 140 0 5	24825 150 0 5	24871 138 0 5	24921 135 0 5	24994 159 0 5	24995 138 0 5
144.5 x 49.1	138.8 x 48.4	108.6 x 35.3	105.4 x 39.4	99.8 x 59.3	127.3 x 75.5	99.8 x 59.3

2508701 Th. 16.8	2511201 Th. 18.1	2514701 Th. 18	2517201 Th. 18	2520201 Th. 16.8	2524001 Th. 17.8	2534001 Th. 15
25087 168 0 5	25112 181 0 5	25147 180 0 5	25172 180 0 5	25202 168 1 4	25240 178 1 5	25340 150 0 5
155.4 x 50.5	128.6 x 59.8	163.6 x 64.5	163.6 x 62.8	141.7 x 58.6	143.6 x 81.2/91.2	127.5 x 49.9

2577801 Th. 13.8	2912113 Th. 20.3	2916002 Th. 19.9	2922902 Th. 21.4	2970602 Th. 17	2998401 Th. 17
25778 138 0 5	29121 203 1 5 T3035	29160 199 0 4 T4136	29229 214 1 5 T4136	29706 170 0 5 T4136	29984 170 0 5 T4136
105.6 x 39.4	164.7 x 66.3	164.7 x 67.8	163.3 x 67.2	166.6 x 62	166.6 x 62

NISSAN (DONGFENG)

2152601 Th. 17
21526 170 0 5
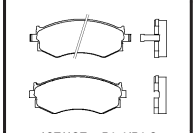
137/137 x 54.4/54.6

2156101 Th. 17
21561 170 0 5
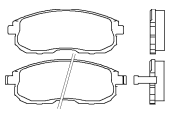
137.1 x 53

2171301 Th. 16.4
21713 164 0 5
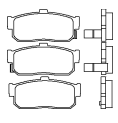
105.3 x 46.8

2342001 Th. 16.5
23420 165 0 5
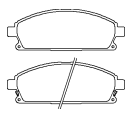
159 x 56.1

2387101 Th. 13.8
23871 138 0 5
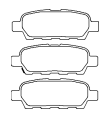
105.4 x 36.5

2397001 Th. 17
23970 170 0 5
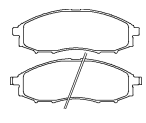
164.3 x 57

2403901 Th. 14.4
24039 144 0 5
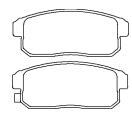
105.7 x 43

2463201 Th. 17
24632 170 0 4
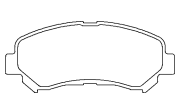
142 x 58.7

2472401 Th. 14
24724 140 0 5

138.8 x 48.4

NISSAN (ZHENGZHOU)

2397001 Th. 17
23970 170 0 5
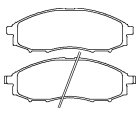
164.3 x 57

OPEL

2022401 Th. 20.9
20224 209 0 5
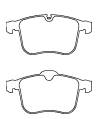
155.1/156.4 x 73.1/77.6

2032306 Th. 14.5
20323 145 0 4
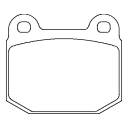
76.7 x 65.8

2041003 Th. 12.9
20410 129 0 5
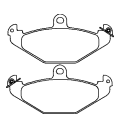
126.2 x 58.3

2054701 Th. 16.8
20547 168 0 5
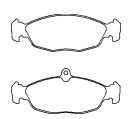
140.1/141.3 x 58.3/48.2

2092602 Th. 18.5
20926 185 0 5
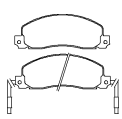
155.7 x 56.5

2105002 Th. 15.2
21050 152 0 4

61.6 x 61.1

2114001 Th. 15.7
21140 157 0 4
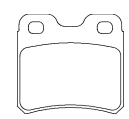
61.8 x 57.5

2136801 Th. 18.3
21368 183 1 5
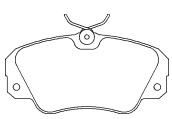
129.8 x 63.9

2141101 Th. 17.5
21411 175 0 5
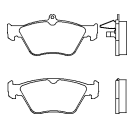
155.2/156.3 x 70.8/60.6

2154302 Th. 16.5
21543 165 0 5
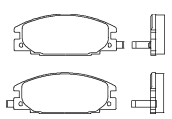
127.3 x 49.3

2184501 Th. 16.5
21845 165 0 5
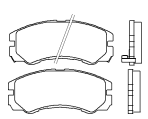
137.8 x 58.6

2186201 Th. 18.3
21862 183 0 5
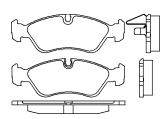
156.3 x 52.5

2187503 Th. 15.8
21875 158 0 5
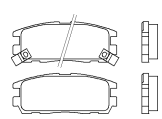
109.5 x 42.6

2306302 Th. 17.3
23063 173 0 5
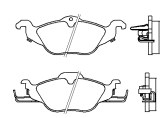
177.6/160 x 62.1/62.8

2309902 Th. 18.4
23099 184 1 4
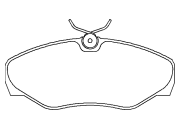
145.1 x 62.4

2311502 Th. 19.6
23115 196 0 5
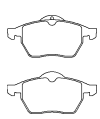
156.3/155.3 x 74/73.9

2311701 Th. 20.2
23117 202 0 5
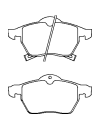
156.5/155.3 x 74

2322501 Th. 17
23225 170 1 5
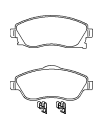
131.5/131.5 x 51.4/55.4

2325001 Th. 16.5
23250 165 0 5
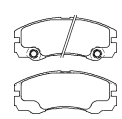
137.6 x 58.5

2325803 Th. 16.9
23258 169 2 5
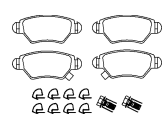
104.9 x 42.7

2328404 Th. 14
23284 140 1 4
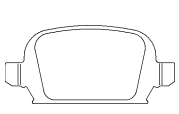
95.6 x 43.9

2330201 Th. 17.5
23302 175 0 4
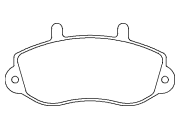
138.7 x 66.7

2332502 Th. 16
23325 160 0 4
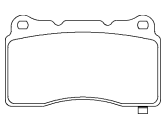
131.8 x 77.5

2335801 Th. 18
23358 180 0 5
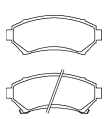
148.1 x 61.1

2336101 Th. 15
23361 150 0 5
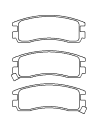
107.8 x 41

2340404 Th. 20.4
23404 204 1 5
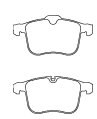
155.1/156.4 x 73.1/77.6

2341702 Th. 15.2
23417 152 1 4
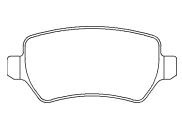
95.3 x 42.8

2341703 Th. 15.2
23417 152 1 5
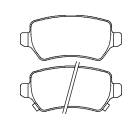
95.5 x 42.8

2341781 Th. 15.2
23417 152 1 4 epad
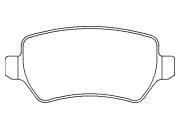
95.3 x 42.8

2360501 Th. 15.5
23605 155 1 5
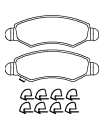
130.9 x 44.5

2361301 Th. 17.8
23613 178 0 4

139 x 79.8

2366901 Th. 16.8
23669 168 1 4

115.7 x 51.3

2370802 Th. 19
23708 182 1 5

137 x 57.4

2370881 Th. 19
23708 182 1 5 epad

137 x 57.4

2373807 Th. 20.6
23738 206 0 5

155.3/156.5 x 69.6/70.7

OPEL

2383201 Th. 19.6
23832 196 0 5
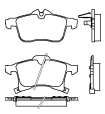
156.3/155.1 x 76/69.6

2383281 Th. 19.6
23832 196 0 5 epad
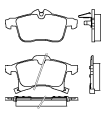
156.3/155.1 x 76/69.6

2391202 Th. 20.4
23912 204 0 5
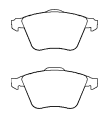
156.3/155.3 x 72.9

2397302 Th. 17.3
23973 173 1 5

116.4 x 52.5

2398001 Th. 17
23980 170 1 4
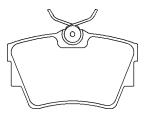
94.6 x 57.3

2398101 Th. 19.2
23981 192 1 5
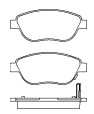
137.2 x 57.4

2398202 Th. 17.8
23982 178 1 5
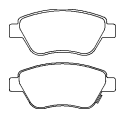
123 x 53.3

2413701 Th. 16.7
24137 167 0 5
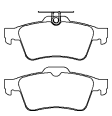
123.2 x 51.9

2413781 Th. 16.7
24137 167 0 5 epad
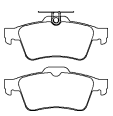
123.2 x 51.9

2415501 Th. 20.6
24155 206 0 5
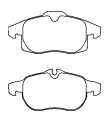
155.3/156.5 x 69.6/70.7

2434903 Th. 17.5
24349 175 2 4

101.7 x 47.3

2441201 Th. 19.1
24412 191 1 5
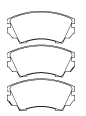
142.1 x 66.7

2441501 Th. 19.1
24415 191 1 5
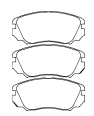
131.5 x 59.7

2441801 Th. 17.2
24418 172 1 5
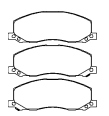
184.5 x 65.6

2442101 Th. 17.3
24421 173 1 5
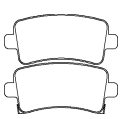
106.4 x 47.1

2442102 Th. 17.3
24421 173 2 5
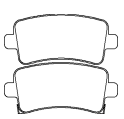
106.4 x 47.1

2449801 Th. 15.4
24498 154 0 5
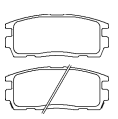
110.9 x 45.7

2451001 Th. 16.9
24510 169 0 5
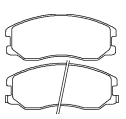
149.4 x 62

2455001 Th. 20.2
24550 202 1 5
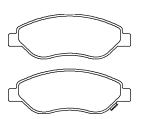
150.8 x 55.3

2472701 Th. 20
24727 200 0 5
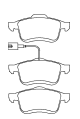
156.3/155.1 x 71.5/69

2479301 Th. 19.5
24793 195 0 5
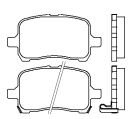
118.8 x 59.5

2503101 Th. 18.8
25031 188 1 5
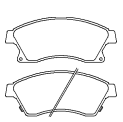
148 x 60.3

2503181 Th. 18.8
25031 188 1 5
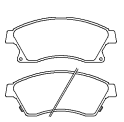
148 x 60.3

2503401 Th. 18.8
25034 188 1 5
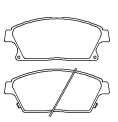
148 x 61.1

2503481 Th. 18.8
25034 188 1 5 epad
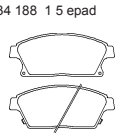
148 x 61.1

2509501 Th. 17
25095 170 1 5
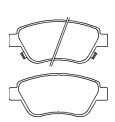
123 x 53.6

2509601 Th. 16.2
25096 162 1 5
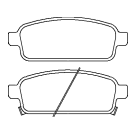
116.6 x 42.6

2509602 Th. 16.2
25096 162 9 5
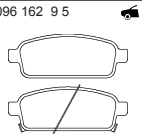
116.6 x 42.6

2509681 Th. 16.2
25096 162 1 5 epad
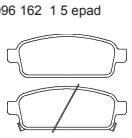
116.6 x 42.6

2511201 Th. 18.1
25112 181 0 5
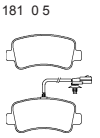
128.6 x 59.8

2514701 Th. 18
25147 180 0 5
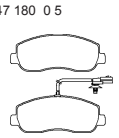
163.6 x 64.5

2517201 Th. 18
25172 180 0 5
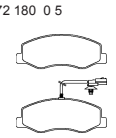
163.6 x 62.8

PERODUA

2078001 Th. 13.4
20780 134 0 4

78.7 x 63.5

2196801 Th. 14
21968 140 0 5
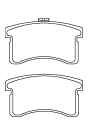
88.7 x 49.2

2349402 Th. 14
23494 140 0 5
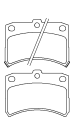
78.8 x 58.2

2349701 Th. 15.5
23497 155 0 5
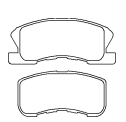
115.7 x 49.4

2350701 Th. 15
23507 150 0 5

108.6 x 45.4

2422901 Th. 15.3
24229 153 1 5
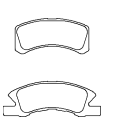
92.2/122.1 x 44.4

2445103 Th. 17.2
24451 172 1 4
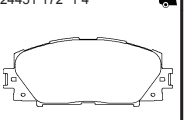
122.8 x 49.6

2526201 Th. 15.4
25262 154 1 5
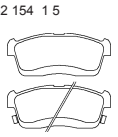
108.3 x 45.4

PEUGEOT

2026101 Th. 19.3
20261 193 1 5

146.6 x 59.9

2090506 Th. 18
20905 180 0 5

105 x 54.3

2090602 Th. 18
20906 180 0 5

105 x 54.3

2090603 Th. 18
20906 180 2 5

105 x 54.3

2090604 Th. 18
20906 180 4 5

105 x 54.3

2096110 Th. 17.4
20961 174 1 4

87 x 53

2097401 Th. 11
20974 110 0 4

105.2 x 54.8

PEUGEOT

2120909 Th. 19.4	2121102 Th. 18.7	2126702 Th. 17.6	2127501 Th. 16.9	2127801 Th. 17	2127803 Th. 17	2129802 Th. 17
21209 194 1 5	21211 187 0 5	21267 176 0 5	21275 169 1 5 T4067	21278 170 0 5	21278 170 1 5	21298 170 1 4
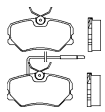	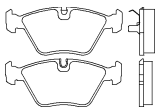	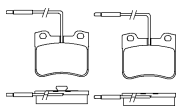	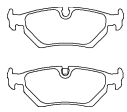	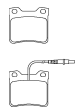	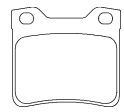	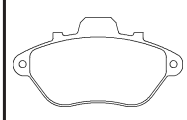
94.7 x 48.8	156.3 x 63.9	71.9 x 60.7	123 x 43	63.5 x 57.5	63.5 x 57.5	130.8 x 68.7

2136301 Th. 15.7	2137001 Th. 15.7	2143001 Th. 17.3	2150701 Th. 17	2167403 Th. 19.3	2172402 Th. 19.3	2179701 Th. 19.7
21363 157 0 5	21370 157 1 4	21430 173 0 5	21507 170 1 4	21674 193 1 5	21724 193 1 5	21797 197 2 5
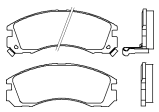		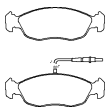		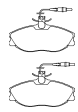	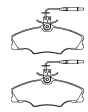	
149.8 x 58.6	149.9 x 58.9	141.3 x 47.2	130.8 x 73.1	129.8 x 56.5	129.8 x 52.7	145 x 60.9

2179901 Th. 19.7	2180101 Th. 19.3	2182702 Th. 17.3	2198004 Th. 18	2198804 Th. 18	2304201 Th. 19	2312401 Th. 19.3
21799 197 2 5	21801 193 2 5	21827 173 0 5	21980 180 2 5	21988 180 1 5	23042 190 1 4	23124 193 1 5
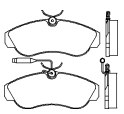	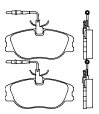	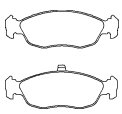	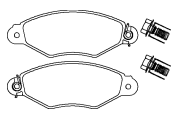	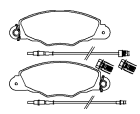	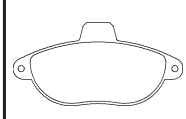	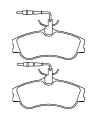
160 x 63.1	129.9 x 59.5	140.1/141.3 x 47.3/47.3	130.9 x 47.3	168.8 x 60.1	139.6 x 68.6	129.9 x 56

2316901 Th. 19.4	2333201 Th. 18	2334602 Th. 19.3	2339602 Th. 18	2355401 Th. 15.2	2355402 Th. 17.2	2355481 Th. 17.2
23169 194 1 5	23332 180 1 5	23346 193 1 4	23396 180 1 4	23554 152 1 4	23554 172 1 4	23554 172 1 4 epad
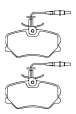		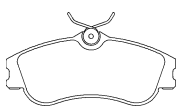	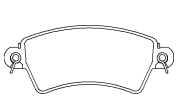		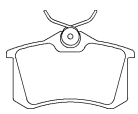	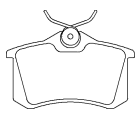
94.7 x 48.8	131 x 52.5	129.7 x 56	130.9 x 52.4	87 x 53	87 x 53	87 x 53

2355482 Th. 15.2	2357501 Th. 16	2358202 Th. 15.5	2358401 Th. 16	2358901 Th. 19	2359703 Th. 18	2360001 Th. 19
23554 152 1 4 epad	23575 160 0 5	23582 155 1 5	23584 160 1 4 T4047	23589 190 0 5	23597 180 1 5	23600 190 1 4
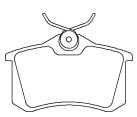	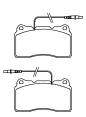	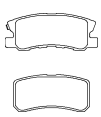	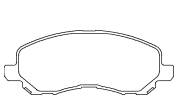	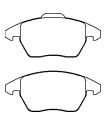	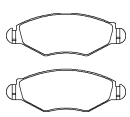	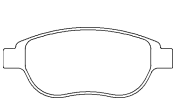
87 x 53	131.6 x 77.2	111.3/91 x 45/45	145.1 x 55	156.5/155.3 x 71.3/66	131.2 x 47.3	136.9 x 57.4

2360201 Th. 19.7	2360301 Th. 19.7	2370601 Th. 17.8	2375301 Th. 18	2391701 Th. 19.1	2391901 Th. 19.1	2392101 Th. 20.1
23602 197 2 5	23603 197 2 5	23706 178 1 5	23753 180 0 5	23917 191 1 5	23919 191 1 5	23921 201 1 4
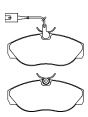	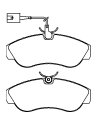	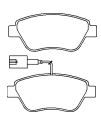	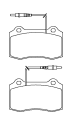	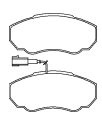		
145 x 62.2	160.3 x 64.4	122.8 x 53.3	109.8 x 69.3	140.5 x 65.6	164.5 x 68.7	109.7 x 49.9

2395401 Th. 19	2395901 Th. 17.5	2397903 Th. 17.8	2410101 Th. 19	2413301 Th. 17.7	2413303 Th. 18.3	2413501 Th. 17.8
23954 190 1 4	23959 175 1 4	23979 178 2 5	24101 190 1 4	24133 177 1 5	24133 183 1 5	24135 178 1 4
137 x 51.6	122.8 x 47.2	122.8 x 53.3	136.8 x 51.1	162.4 x 79.1	162.3 x 79.1	86.2 x 57

2415001 Th. 17.6	2417501 Th. 18.7	2433201 /18.8	2442302 Th. 14.7	2446501 Th. 18.8	2446601 Th. 19	2446602 Th. 19
24150 176 1 4	24175 187 1 5	24332 179 1 5	24423 147 0 5	24465 188 1 4	24466 190 1 5	24466 190 2 5
94.8 x 46.8	131.4 x 66.8	155.1 x 66.4/72.2	108.4 x 41.8	137.1 x 48.8	169.1 x 69.1	169.1 x 69.1

2446701 Th. 19	2446703 Th. 19	2446801 Th. 19	2446802 Th. 19	2446901 Th. 19	2446902 Th. 19	2453801 /18.8
24467 190 1 5	24467 190 3 5	24468 190 1 5	24468 190 2 5	24469 190 1 5	24469 190 2 5	24538 188 0 5
169.1 x 69.1	169.1 x 69.1	169.1 x 61.6	169.1 x 61.6	169.1 x 61.6	169.1 x 61.6	155.3 x 64.7/57.7

PEUGEOT

2454001 Th. 16.4
24540 164 1 4
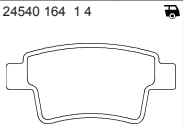
102.5 x 48.4

2455801 /18
24558 180 0 5
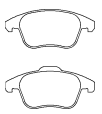
155.2 x 66.7/71.6

2457801 Th. 16.6
24578 166 1 4
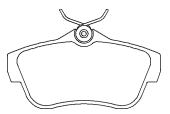
113.5 x 58.2

2459501 Th. 18.3
24595 183 1 5
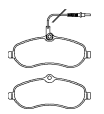
162.2 x 66.8

2466001 Th. 17.8
24660 178 1 4
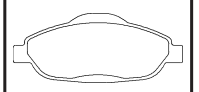
150.9 x 61.6

2473701 Th. 18
24737 176 1 4

94.5 x 46.8

2476501 Th. 16.6
24765 166 1 4

86.8 x 53

2483901 Th. 19.4
24839 194 1 5

162.5 x 63.7

2488301 Th. 18
24883 180 1 4

136.7 x 59.2

2492201 Th. 17.3
24922 173 1 4
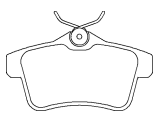
103.7 x 55.9

2506901 Th. 17
25069 170 1 5
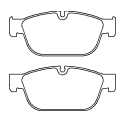
179.9 x 74.9

2507001 Th. 17
25070 170 0 5
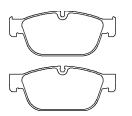
179.9 x 74.9

2509401 Th. 19
25094 190 1 4
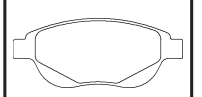
136.8 x 56.9

2521801 Th. 16.3
25218 163 0 5

123 x 51.9

2522201 Th. 17
25222 170 1 5
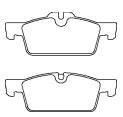
155.1 x 60.3/54.9

2525001 Th. 18.7
25250 187 1 5
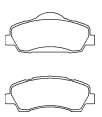
132.8 x 59.9/52.6

2568801 Th. 14.3
25688 143 0 5
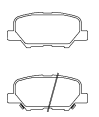
101.4 x 44.3

2583901 Th. 17.5
25839 175 1 5
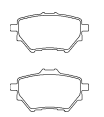
98.9 x 50/53.4

PEUGEOT (DF-PSA)

2097401 Th. 11
20974 110 0 4
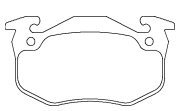
105.2 x 54.8

2359703 Th. 18
23597 180 1 5
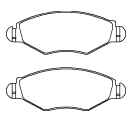
131.2 x 47.3

2360001 Th. 19
23600 190 1 4

136.9 x 57.4

2410101 Th. 19
24101 190 1 4

136.8 x 51.1

2454001 Th. 16.4
24540 164 1 4

102.5 x 48.4

2466001 Th. 17.8
24660 178 1 4

150.9 x 61.6

2473701 Th. 18
24737 176 1 4

94.5 x 46.8

PIAGGIO

2078001 Th. 13.4
20780 134 0 4

78.7 x 63.5

2473001 Th. 10.2
24730 103 0 5
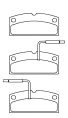
89.6 x 41.5

PLYMOUTH

2304301 Th. 18.6
23043 186 0 5
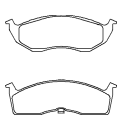
165.1/164.6 x 54.2/51.6

2356102 Th. 17
23561 170 0 5
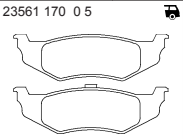
133.8 x 39.9

2374001 Th. 15.5
23740 155 0 5
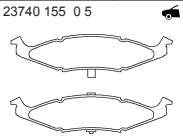
165.1 x 38.1

2495301 Th. 16.5
24953 186 0 5
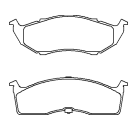
164.1/164.6 x 54.2/51.6

2510801 Th. 15.9
25109 159 0 5
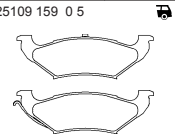
155.7 x 49.4

PONTIAC

2324102 Th. 16.5
23241 165 0 4
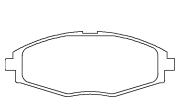
126.9 x 47.9

2335801 Th. 18
23358 180 0 5
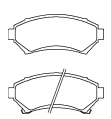
148.1 x 61.1

2336101 Th. 15
23361 150 0 5
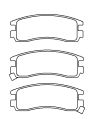
107.8 x 41

2413701 Th. 16.7
24137 167 0 5
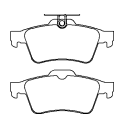
123.2 x 51.9

2413781 Th. 16.7
24137 167 0 5 epad
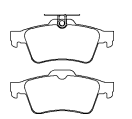
123.2 x 51.9

2449801 Th. 15.4
24498 154 0 5
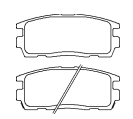
110.9 x 45.7

2451001 Th. 16.9
24510 169 0 5
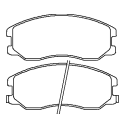
149.4 x 62

PONTIAC

2471101 /16.2	2471401 Th. 15.9	2471701 Th. 17.3	2479301 Th. 19.5	2481701 Th. 17	2485601 Th. 17.9	2530401 Th. 14.2
24711 162 0 5	24714 178 0 5	24717 173 0 5	24793 195 0 5	24817 170 1 4	24856 180 0 5	25304 140 0 5
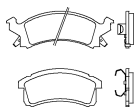	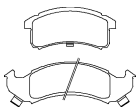	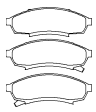	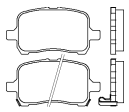	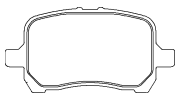	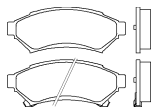	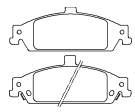
189.7/147.6 x 65.6/65	216.6/147.6 x 68.8/67.7	140.3 x 49.1	118.8 x 59.5	118.8 x 59.7	147.7 x 57	161.2 x 57.7/62.7

PORSCHE

2179203 Th. 15.5	2193702 Th. 15.5	2313901 Th. 17	2332902 Th. 17	2341401 Th. 17	2369202 Th. 16.7	2369281 Th. 16.7
21792 155 0 4	21937 155 0 4	23139 170 0 4	23329 170 0 4	23414 170 0 4	23692 167 0 4	23692 167 0 4 epad
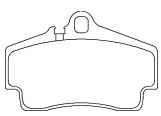		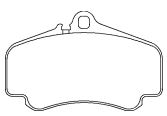	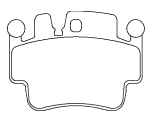	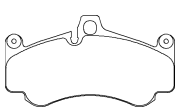	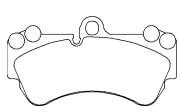	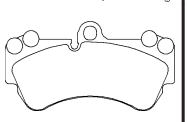
112 x 73	114 x 78	140 x 88.5	121 x 90.1	190 x 101.8	190 x 99.1	190 x 99.1

2369302 Th. 16.7	2369381 Th. 16.7	2369402 Th. 16.7	2369481 Th. 16.7	2396101 Th. 17	2401001 Th. 16.7	2404901 Th. 17
23693 167 0 4	23693 167 0 4 epad	23694 167 0 4	23694 167 0 4 epad	23961 170 0 4	24010 167 0 4	24049 170 0 4 T4045
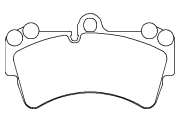	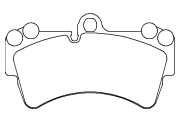	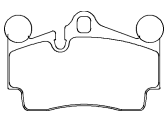	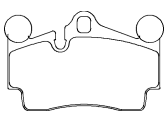	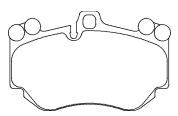	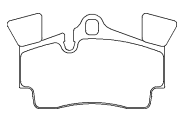	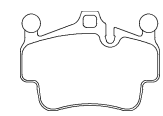
190 x 106.3	190 x 106.3	117 x 73	117 x 73	176 x 109.6	117 x 73	121 x 85.9

2404903 Th. 17	2415404 Th. 17.7	2445401 Th. 17.5	2445403 Th. 17	2445901 Th. 18.5	2445902 Th. 18.5	2454101 Th. 15.5
24049 170 0 4 T4997	24154 17,7 0 4	24454 175 0 4 T4997	24454 170 0 4 T4997	24459 185 0 5 T4997	24459 185 0 5 T4045	24541 155 0 4
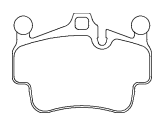	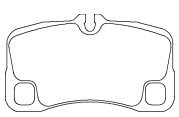	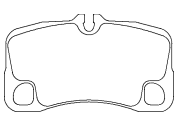	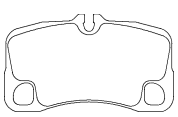	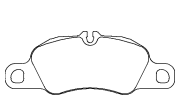	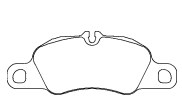	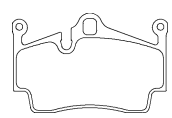
121 x 85.9	130.5 x 74.5	130.5 x 75.5	130.5 x 75.5	199.5 x 74	199.5 x 74	112 x 73

2455301 Th. 16.1	2455401 Th. 16	2455402 Th. 16	2461401 Th. 16.6	2464101 Th. 17.7	2468501 Th. 17.1	2472101 Th. 17.2
24553 161 0 4	24554 160 0 4 T4045	24554 160 0 4 T4997	24614 166 0 4	24641 177 0 4	24685 171 0 4	24721 172 0 4
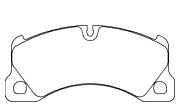	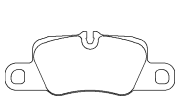	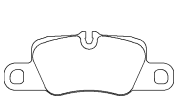	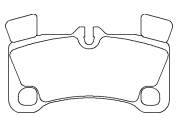	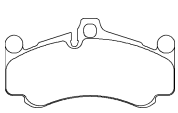	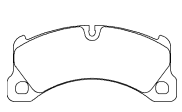	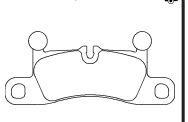
209.5 x 94.2	187 x 69.9	187 x 69.9	132.1 x 81.5	190 x 99.6	209.5 x 94.6	187.5 x 79.8

2472102 Th. 17.4	2500301 Th. 17.3	2500701 Th. 17.1	2521403 Th. 17.5	2570101 Th. 16.9
24721 174 0 4	25003 173 0 4	25007 171 0 4	25214 175 3 5	25701 169 0 4
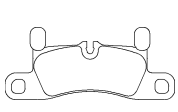	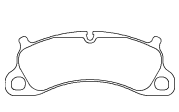	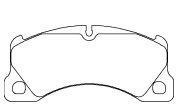		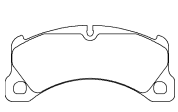
187.5 x 75.5	198.3 x 75.4	209.5 x 94.2	116.6 x 60/59	209.5 x 94.3

PREMIER

2165001 Th. 15
21650 150 1 4
114 x 50

PROTON

2164701 Th. 16	2165001 Th. 15	2170602 Th. 15.5	2187202 Th. 14.5	2192001 Th. 15.1	2354901 Th. 16.8	2397401 Th. 17.8
21647 160 0 5	21650 150 1 4	21706 155 0 5	21872 145 0 5	21920 151 1 4	23549 168 1 5	23974 178 0 4
127.8 x 52.1	114 x 50	107.7 x 41	98.9 x 37.7	130 x 72.8	87.2 x 47.1	133.2 x 48.9

PROTON

2397406 Th. 17.8	2426004 Th. 16.3	2428801 Th. 17
23974 178 0 5	24260 163 0 5	24288 178 1 5
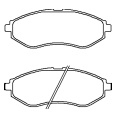	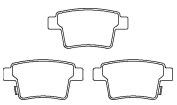	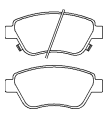
133.2 x 48.9	101.7 x 50.4	123 x 53.3

PUCH

2078401 Th. 18	2302101 Th. 18.9	2390101 Th. 18.8
20784 180 0 4	23021 189 0 4	23901 188 1 5
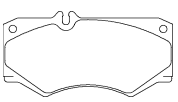	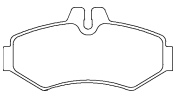	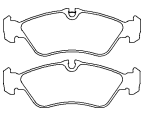
149 x 75	125.7 x 61.5	156.4 x 54.3

RELY

2370201 Th. 15.8
23702 158 0 4

92.9 x 37.8

RENAULT

2034501 Th. 16.9	2041001 Th. 15	2048802 Th. 18.5	2063402 Th. 15	2090506 Th. 18	2092602 Th. 18.5	2097401 Th. 11
20345 169 0 4	20410 150 0 5	20488 185 0 5	20634 150 0 4	20905 180 0 5	20926 185 0 5	20974 110 0 4
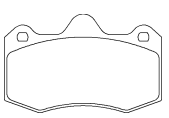	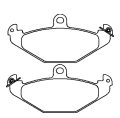	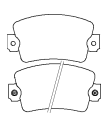	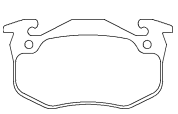	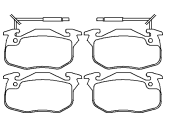	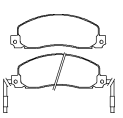	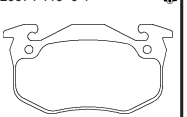
130.2 x 81.5	126.2 x 58.3	108.9 x 58	105 x 54.8	105 x 54.3	155.7 x 56.5	105.2 x 54.8

2109601 Th. 15	2138802 Th. 18.3	2146304 Th. 18.2	2146306 Th. 18.2	2150401 Th. 17	2159502 Th. 18.3	2159701 Th. 11
21096 150 0 5	21388 183 2 5	21463 182 3 4	21463 182 1 4	21504 170 1 5	21595 183 2 5	21597 110 1 5
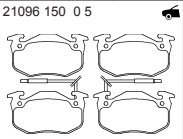	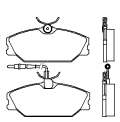	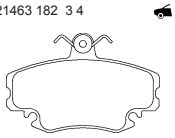	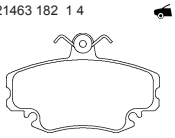	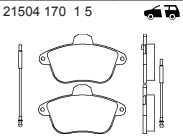	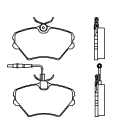	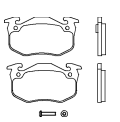
105.2 x 54.8	129.9 x 55.4	99.9 x 64.8	99.9 x 64.8	130.8 x 73.1	109.9 x 60.9	105.2 x 54.8

2188801 Th. 18.4	2196502 Th. 15	2198003 Th. 18	2198009 Th. 18	2309203 Th. 16	2309902 Th. 18.4	2309903 Th. 18.4
21888 184 1 5	21965 150 0 5	21980 180 1 5	21980 180 3 5	23092 160 0 4	23099 184 1 4	23099 184 0 5
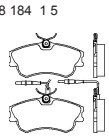	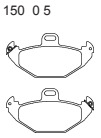	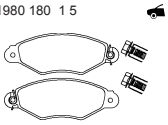	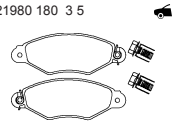	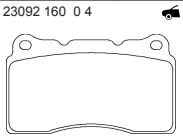	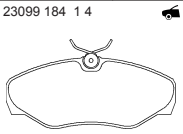	
129.9 x 63	126.2 x 63	130.9 x 47.3	130.9 x 47.3	131.6 x 77.2	145.1 x 62.4	145.1 x 62.4

2317203 Th. 18.3	2321502 Th. 18.3	2324502 Th. 18.3	2324802 Th. 18.3	2330201 Th. 17.5	2348202 Th. 16.8	2355401 Th. 15.2
23172 183 1 4	23215 183 1 5	23245 183 1 5	23248 183 1 5	23302 175 0 4	23482 168 0 5	23554 152 1 4
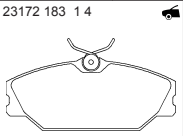	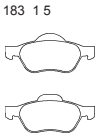	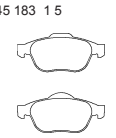	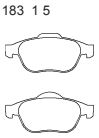	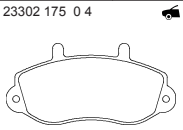	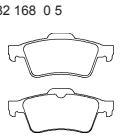	
129 x 55.4	156.5/155.3 x 66.3/68.7	156.5/155.3 x 68.2/70.1	156.3/155.1 x 68.2/70.1	138.7 x 66.7	123 x 51.9	87 x 53

2355406 Th. 16.2	2355482 Th. 15.2	2355702 Th. 16.9	2361301 Th. 17.8	2366901 Th. 16.8	2369801 Th. 16	2387101 Th. 13.8
23554 162 1 4	23554 152 1 4 epad	23557 169 1 4	23613 178 0 4	23669 168 1 4	23698 160 0 5	23871 138 0 5
	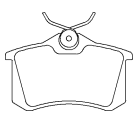	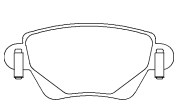	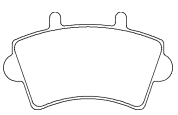			
87 x 53	87 x 53	115.6 x 51.7	139 x 79.8	115.7 x 51.3	157.3 x 58.5	105.4 x 36.5

RENAULT

2393001 Th. 18.1	2393401 Th. 18.1	2397301 Th. 17.3	2398001 Th. 17	2413701 Th. 16.7	2413781 Th. 16.7	2416201 Th. 15.3
23930 181 1 4	23934 181 1 4	23973 173 1 4	23980 170 1 4	24137 167 0 5	24137 167 0 5 epad	24162 153 0 4
				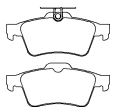	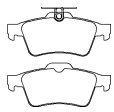	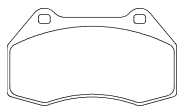
136.8 x 59.5	123 x 54.2	116.3 x 51.9	94.6 x 57.3	123.2 x 51.9	123.2 x 51.9	125 x 70.8

2440301 Th. 17.3	2453501 Th. 18.3	2453601 Th. 18.3	2467301 Th. 18	2469201 Th. 15	2469301 Th. 18.7	2469306 Th. 17.6
24403 173 0 5	24535 183 0 5	24536 183 1 5	24673 180 0 5	24692 150 1 4	24693 187 1 4	24693 176 3 5
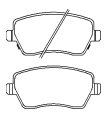	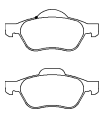	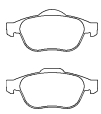	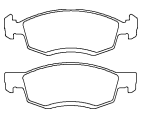			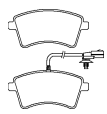
116.4 x 52.5	156.3/155.3 x 66.3/68.7	156.5/155.1 x 68.2/70.1	151.3/150.1 x 52.5	95.3 x 43.9	131 x 62.1	131 x 62.1

2470901 Th. 18	2471001 Th. 18	2482001 Th. 15.7	2482601 Th. 18	2487001 Th. 18	2491401 Th. 18	2497101 Th. 18.4
24709 180 0 5	24710 180 0 5	24820 157 1 4	24826 180 0 5	24870 180 0 5	24914 180 0 5	24971 184 1 4
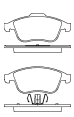	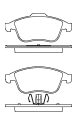			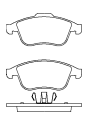	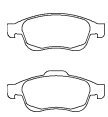	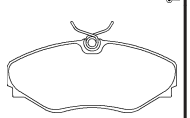
156.4/155.1 x 68/63	155.2 x 63/68	106 x 45.3	155.4 x 63/68	155.1/156.4 x 63/68	155.3 x 59.4/64.7	143.8 x 62.2

2511201 Th. 18.1	2514701 Th. 18	2517201 Th. 18	2526501 Th. 16.2	2570201 Th. 18
25112 181 0 5	25147 180 0 5	25172 180 0 5	25265 162 0 5	25702 180 0 5
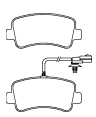	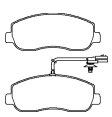	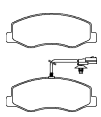	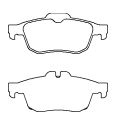	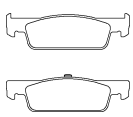
128.6 x 59.8	163.6 x 64.5	163.6 x 62.8	122.9 x 50.6/50.5	140 x 41.8/40

RENAULT SAMSUNG

2369801 Th. 16	2387101 Th. 13.8
23698 160 0 5	23871 138 0 5
	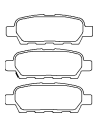
157.3 x 58.5	105.4 x 36.5

RENAULT TRUCKS

2392103 Th. 20.1	2907102 Th. 17	2912112 Th. 20.3	2912113 Th. 20.3	2916002 Th. 19.9	2922902 Th. 21.4	2998501 Th. 17
23921 201 1 5	29071 170 0 5 T4136	29121 203 0 4 T3035	29121 203 1 5 T3035	29160 199 0 4 T4136	29229 214 1 5 T4136	29985 170 0 5 T4136
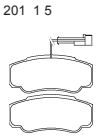		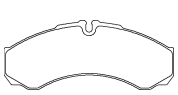	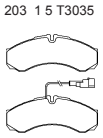	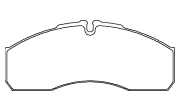	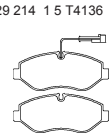	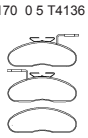
109.5 x 49.9	166.6 x 62	164.7 x 66.3	164.7 x 66.3	164.7 x 67.8	163.3 x 67.2	166.6 x 62

ROEWE (SAIC)

2193402 Th. 17.3	2193481 Th. 17.3	2311203 Th. 19.1
21934 173 0 5	21934 173 0 5 epad	23112 191 0 5
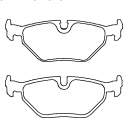	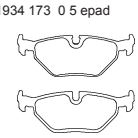	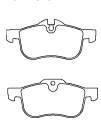
123 x 44.8	123 x 44.8	156.3/155 x 67.1/69.9

ROLLS-ROYCE

2148401 Th. 20.8	2373001 Th. 17.3	2373081 Th. 17.3	2379101 Th. 20.8	2379181 Th. 20.8
21484 208 0 5	23730 173 0 5	23730 173 0 5 epad	23791 208 0 5	23791 208 0 5 epad
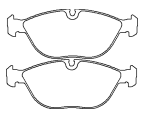	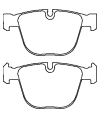	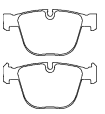	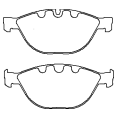	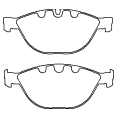
194.5 x 73.5	139.5 x 67	139.5 x 67	193.2 x 79.2	193.2 x 79.2

ROVER

2003801 Th. 13.8	2008701 Th. 14	2124501 Th. 17.4	2131201 Th. 13	2144601 Th. 17.5	2151503 Th. 18	2152001 Th. 18
20038 138 0 4	20087 140 0 5	21245 174 0 5	21312 130 0 5	21446 175 0 5	21515 180 1 5	21520 180 1 5
	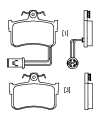	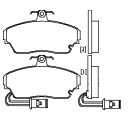	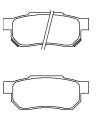	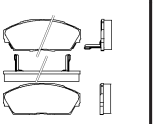	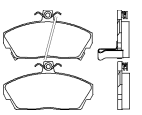	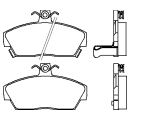
74 x 64	85.1 x 62.7	129.1 x 68.1	88.8 x 35.1	129 x 52.9	129.2 x 69.7	117.3 x 65.4

2165101 Th. 17.3	2168202 Th. 14.5	2171901 Th. 14.6	2187901 Th. 18.5	2193402 Th. 17.3	2193481 Th. 17.3	2311203 Th. 19.1
21651 173 0 5	21682 145 1 5	21719 146 0 5	21879 185 0 5	21934 173 0 5	21934 173 0 5 epad	23112 191 0 5
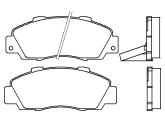	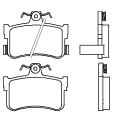	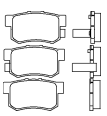	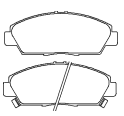	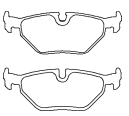	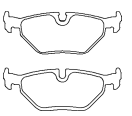	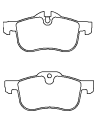
148.6 x 57.7	85.2 x 62.7	88.7 x 46.8	137.7 x 53.7	123 x 44.8	123 x 44.8	156.3/155 x 67.1/69.9

2318302 Th. 20.3	2318381 Th. 20.3	2455501 Th. 16	2499601 Th. 17.4
23183 203 0 5	23183 203 0 5 epad	24555 160 0 4	24996 170 1 5
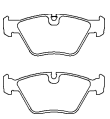	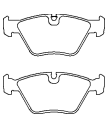		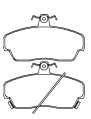
155.3/155.3 x 63.9/63.9	155.1/156.3 x 63.9/63.9	121.6 x 45.3	130 x 73

SAAB

2022401 Th. 20.9	2105002 Th. 15.2	2193404 Th. 16.3	2309102 Th. 15.2	2311502 Th. 19.6	2311701 Th. 20.2	2340404 Th. 20.4
20224 209 0 5	21050 152 0 4	21934 163 0 5	23091 152 1 4	23115 196 0 5	23117 202 0 5	23404 204 1 5
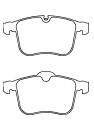		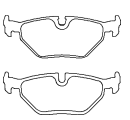	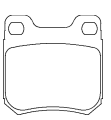	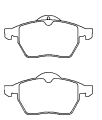	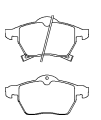	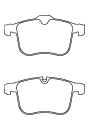
155.1/156.4 x 73.1/77.6	61.6 x 61.1	123 x 44.8	61.3 x 61	156.3/155.3 x 74/73.9	156.5/155.3 x 74	155.1/156.4 x 73.1/77.6

2357202 Th. 13.8	2373807 Th. 20.6	2386501 Th. 16.4	2391201 Th. 18.5	2413701 Th. 16.7	2413781 Th. 16.7	2415501 Th. 20.6
23572 138 0 5	23738 206 0 5	23865 164 0 5	23912 185 0 5	24137 167 0 5	24137 167 0 5 epad	24155 206 0 5
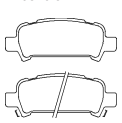	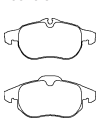	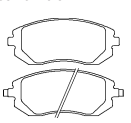		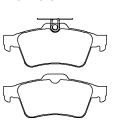	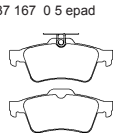	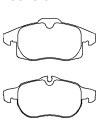
108.3 x 42.5	155.3/156.5 x 69.6/70.7	137.1 x 56.8	156.3/155.3 x 72.9	123.2 x 51.9	123.2 x 51.9	155.3/156.5 x 69.6/70.7

2441201 Th. 19.1	2441501 Th. 19.1	2441801 Th. 17.2	2442101 Th. 17.3	2442102 Th. 17.3	2444501 Th. 16.9	2444801 Th. 16.8
24412 191 1 5	24415 191 1 5	24418 172 1 5	24421 173 1 5	24421 173 2 5	24445 169 0 5	24448 168 1 4
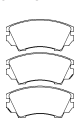	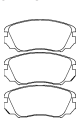	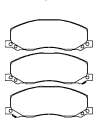				
142.1 x 66.7	131.5 x 59.7	184.5 x 65.6	106.4 x 47.1	106.4 x 47.1	137.7 x 47	177 x 62.6

SANTANA

2074105 Th. 15	2430201 Th. 15.5	2466301 Th. 14
20741 150 1 4	24302 163 1 4	24663 140 0 4
130 x 71.5	109.9 x 50	99 x 61.5

SEAT

2016801 Th. 16.2	2016804 Th. 19.6	2088707 Th. 15.3	2088708 Th. 17.3	2088710 Th. 19.7	2088902 Th. 17.3	2138102 Th. 15
20168 162 1 4	20168 196 1 4	20887 153 2 5	20887 173 2 5	20887 197 2 5	20889 173 2 4	21381 150 0 4
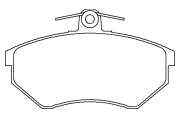	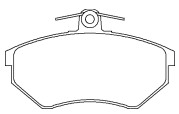	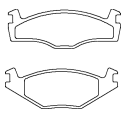	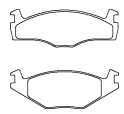	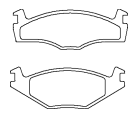	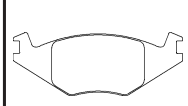	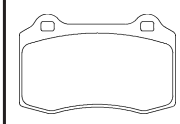
118.9 x 69	118.9 x 69	137.7/137.7 x 48.8/48.2	137.7/137.7 x 48.8/48.2	137.7/137.7 x 48.8/48.2	137.9 x 51.3	109.8 x 69.3

2184802 Th. 19.7	2184903 Th. 20.6	2186601 Th. 15.3	2186602 Th. 17.2	2186603 Th. 19.7	2191102 Th. 20.6	2194502 Th. 16.2
21848 197 0 5	21849 206 0 5	21866 153 0 5	21866 172 0 5	21866 197 0 5	21911 206 0 5	21945 162 1 4
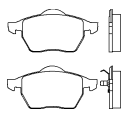	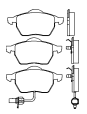	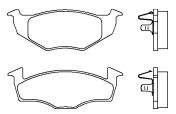	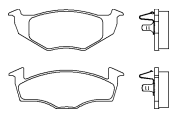	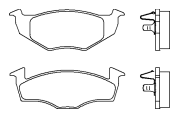	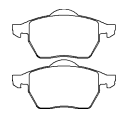	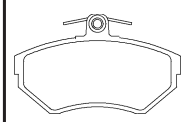
155.8/156.6 x 74.2/74.2	156.6 x 74	141.6/141.6 x 51.2/50.3	141.6/141.6 x 51.2/50.3	141.6/141.6 x 51.2/50.3	156.4 x 74	119.2 x 69.5

2194504 Th. 19.6	2301802 Th. 20.4	2301881 Th. 20.4	2313001 Th. 19.7	2313081 Th. 19.7	2313101 Th. 19.7	2313181 Th. 19.7
21945 196 1 5	23018 204 0 5	23018 204 0 5 epad	23130 197 0 5	23130 197 0 5 epad	23131 197 0 5	23131 197 0 5 epad
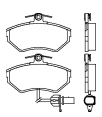	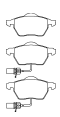	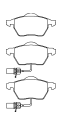	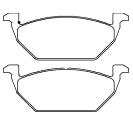	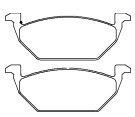	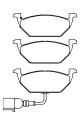	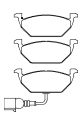
119.2 x 69.5	156.4 x 74	156.4 x 74	146 x 54.6	146 x 54.6	146 x 54.7	146 x 54.7

2326903 Th. 20.1	2339201 Th. 20.6	2341801 Th. 19.6	2344605 Th. 16.5	2355401 Th. 15.2	2355402 Th. 17.2	2355403 Th. 17.2
23269 201 0 5	23392 206 0 5	23418 196 0 5	23446 165 1 5	23554 152 1 4	23554 172 1 4	23554 172 1 5
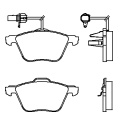	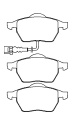	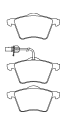	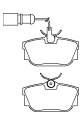	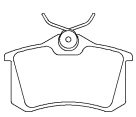	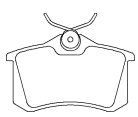	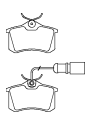
161.3 x 74.4/72.9	156.5 x 74.2	156.5 x 78.5	94.8 x 51	87 x 53	87 x 53	87 x 53

2355481 Th. 17.2	2355482 Th. 15.2	2358101 Th. 19	2358102 Th. 19	2358701 Th. 20.3	2358781 Th. 20.3	2376302 Th. 20.3
23554 172 1 4 epad	23554 152 1 4 epad	23581 190 1 4	23581 190 1 5	23587 203 0 5	23587 203 0 5 epad	23763 203 0 5
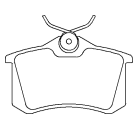	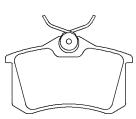		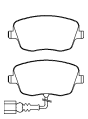	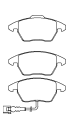	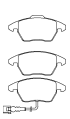	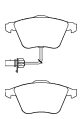
87 x 53	87 x 53	131.4 x 60	131.4 x 62.6	156.5/155.3 x 71.3/66	156.5/155.3 x 71.3/66	156.5/155.3 x 72.9

2376381 Th. 20.3	2380101 Th. 20.3	2380181 Th. 20.3	2382301 Th. 17.2	2391301 Th. 20.3	2391401 Th. 17.2	2391481 Th. 17.2
23763 203 0 5 epad	23801 204 0 5	23801 204 0 5 epad	23823 172 1 5	23913 203 0 5	23914 172 1 4	23914 172 1 4 epad
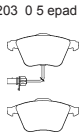	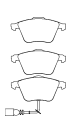		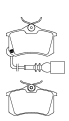	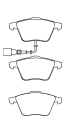		
156.5/155.3 x 72.9	156.3/155.1 x 72.9	156.3/155.1 x 72.9	87 x 53	155.1/156.3 x 72.9	105.5 x 56.5	105.5 x 56.5

2414301 Th. 15	2433301 /20.6	2448301 Th. 17.2	2448381 Th. 17.2	2456301 Th. 17.7	2473801 Th. 20	2497401 Th. 16.7
24143 150 0 5	24333 199 0 5	24483 172 1 4	24483 172 1 4 epad	24563 177 1 4	24738 200 1 5	24974 167 0 4
109.8 x 69.3	155.1 x 72.2/66.4	105.5 x 56.3	105.5 x 56.3	109.2 x 53.3	175 x 69.5	130 x 81.5

2511001 Th. 17.5	2568301 Th. 20.3
25110 175 1 4	25683 203 1 5
104 x 52.2	160 x 64.8

SKODA

2166201 Th. 17.8	2186602 Th. 17.2	2186801 Th. 17.2	2191102 Th. 20.6	2301802 Th. 20.4	2301881 Th. 20.4	2313001 Th. 19.7
21662 178 1 4	21866 172 0 5	21868 172 0 5	21911 206 0 5	23018 204 0 5	23018 204 0 5 epad	23130 197 0 5
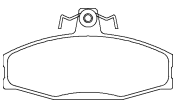	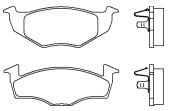	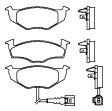	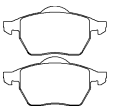			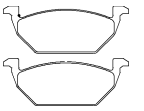
114.8 x 61	141.6/141.6 x 51.2/50.3	141.6/141.6 x 51.2/50.3	156.4 x 74	156.4 x 74	156.4 x 74	146 x 54.6

2313081 Th. 19.7	2313101 Th. 19.7	2313181 Th. 19.7	2339201 Th. 20.6	2355402 Th. 17.2	2355481 Th. 17.2	2358101 Th. 19
23130 197 0 5 epad	23131 197 0 5	23131 197 0 5 epad	23392 206 0 5	23554 172 1 4	23554 172 1 4 epad	23581 190 1 4
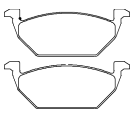		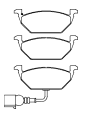	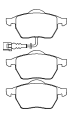			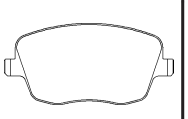
146 x 54.6	146 x 54.7	146 x 54.7	156.5 x 74.2	87 x 53	87 x 53	131.4 x 60

2358102 Th. 19	2358701 Th. 20.3	2358781 Th. 20.3	2380101 Th. 20.3	2380181 Th. 20.3	2391401 Th. 17.2	2391402 Th. 17.2
23581 190 1 5	23587 203 0 5	23587 203 0 5 epad	23801 204 0 5	23801 204 0 5 epad	23914 172 1 4	23914 172 2 4
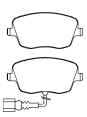	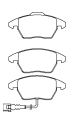	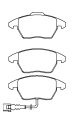	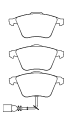	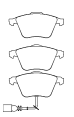	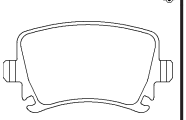	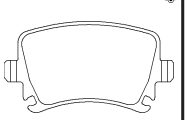
131.4 x 62.6	156.5/155.3 x 71.3/66	156.5/155.3 x 71.3/66	156.3/155.1 x 72.9	156.3/155.1 x 72.9	105.5 x 56.5	105.5 x 56.5

2391481 Th. 17.2	2391482 Th. 17.2	2456301 Th. 17.7	2473801 Th. 20	2511001 Th. 17.5	2568101 Th. 18	2568301 Th. 20.3
23914 172 1 4 epad	23914 172 2 4 epad	24563 177 1 4	24738 200 1 5	25110 175 1 4	25681 180 1 5	25683 203 1 5
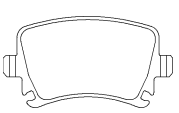	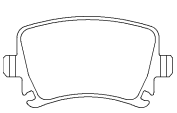		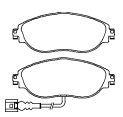	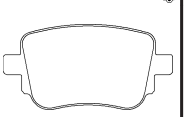	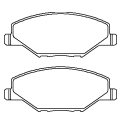	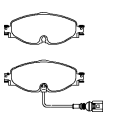
105.5 x 56.5	105.5 x 56.5	109.2 x 53.3	175 x 69.5	104 x 52.2	131 x 52.2	160 x 64.8

SKODA (SVW)

2313001 Th. 19.7	2313081 Th. 19.7	2313101 Th. 19.7	2313181 Th. 19.7	2355402 Th. 17.2	2355481 Th. 17.2	2358701 Th. 20.3
23130 197 0 5	23130 197 0 5 epad	23131 197 0 5	23131 197 0 5 epad	23554 172 1 4	23554 172 1 4 epad	23587 203 0 5
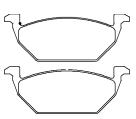	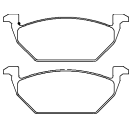	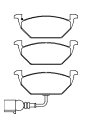	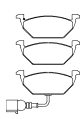			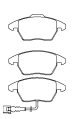
146 x 54.6	146 x 54.6	146 x 54.7	146 x 54.7	87 x 53	87 x 53	156.5/155.3 x 71.3/66

2358781 Th. 20.3
23587 203 0 5 epad
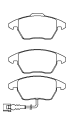
156.5/155.3 x 71.3/66

SMART

2192003 Th. 17.4	2198304 Th. 16.5	2199901 Th. 15.8	2354901 Th. 16.8
21920 174 1 4	21983 165 1 4	21999 158 1 5	23549 168 1 5
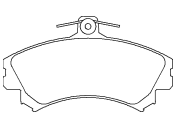	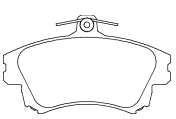	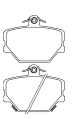	
130 x 72.8	129.9 x 79.6	90.2 x 70.1	87.2 x 47.1

SSANGYONG

2157302 Th. 14	2172502 Th. 15.6	2323001 Th. 15.8	2323101 Th. 15.8	2323701 Th. 14.5	2324201 Th. 14.2	2356901 Th. 17
21573 140 1 5	21725 156 0 5	23230 158 0 5	23231 158 0 5	23237 145 1 4	23242 142 1 5	23569 170 0 5
145.5 x 59	137 x 54	169.5 x 59/50	169.5 x 59/50	114 x 54.9	114 x 55	148.9 x 58.1

SSANGYONG

2367301 Th. 15	2372601 Th. 16.5	2393101 Th. 15	2405001 Th. 15.2	2435101 Th. 17.6	2493401 Th. 15.5
23673 150 0 5	23726 165 0 5	23931 150 0 5	24050 152 0 5	24351 176 0 5	24934 155 1 5
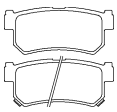	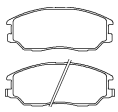	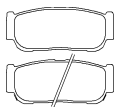		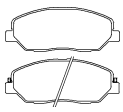	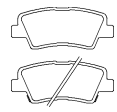
98.8 x 43.5	149.1 x 61	118.5 x 48.1	98.7 x 43.6	156.9 x 60.9	99.9 x 41

SUBARU

2095802 Th. 16	2130701 Th. 14.5	2133301 Th. 15	2148201 Th. 17	2149501 Th. 17	2158001 Th. 14.3	2170301 Th. 15
20958 160 0 4	21307 145 0 5	21333 150 0 5	21482 170 0 5	21495 170 0 5	21580 143 0 5	21703 150 0 5
	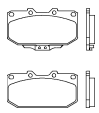	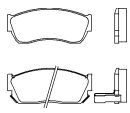	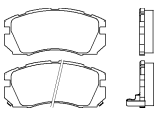	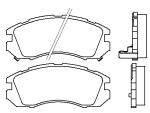	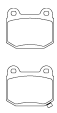	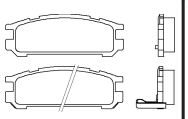
108.5 x 37.2	119.2/119.2 x 70.1/61.6	107.3 x 44.6	127.8 x 58.6	128 x 54.7	76.5 x 65.5	107.6 x 38.8

2185401 Th. 15	2309204 Th. 15	2329601 Th. 15	2338101 Th. 15.5	2338102 Th. 17	2350701 Th. 15	2355802 Th. 17
21854 150 0 4	23092 150 0 5	23296 150 0 5	23381 155 0 5	23381 170 0 5	23507 150 0 5	23558 170 0 5
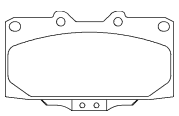	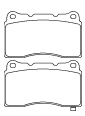	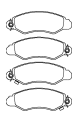	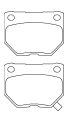	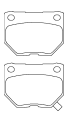	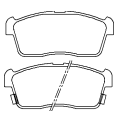	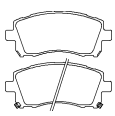
119.2 x 70	131.6 x 77.2	131.2 x 45.2	73.5 x 54.5	73.5 x 54.5	108.6 x 45.4	138 x 59.5

2357202 Th. 13.8	2360501 Th. 15.5	2378001 Th. 17	2386501 Th. 16.4	2422201 Th. 18	2427101 Th. 14.7	2428303 Th. 16.5
23572 138 0 5	23605 155 1 5	23780 170 0 5	23865 164 0 5	24222 180 0 5	24271 147 1 5	24283 165 1 5
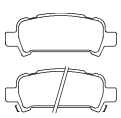	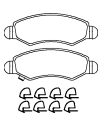	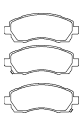	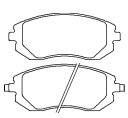	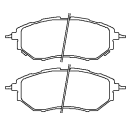	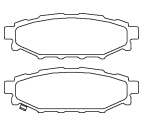	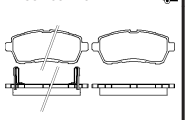
108.3 x 42.5	130.9 x 44.5	138 x 54	137.1 x 56.8	157 x 63.4	110.4 x 37.3	125.6 x 51.7

2429201 Th. 14.8	2433101 Th. 14	2433601 Th. 17.5	2437201 Th. 17.9	2461001 Th. 14.3	2485401 Th. 16	2526201 Th. 15.4
24292 148 0 5	24331 140 1 4	24336 175 0 4	24372 174 1 4	24610 143 0 5	24854 160 1 5	25262 154 1 5
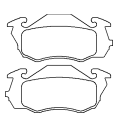				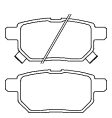	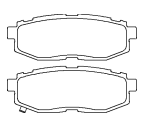	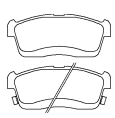
117.5 x 53.1	108.6 x 39.2	139.2 x 55.9	137 x 53.8	98.7 x 42.6	110.6 x 39.5	108.3 x 45.4

2576001 Th. 16.7
25760 167 1 5
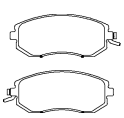
137.1 x 56.8

SUZUKI

2073101 Th. 15.2	2114202 Th. 15.5	2133301 Th. 15	2134401 Th. 16	2150001 Th. 14.8	2155901 Th. 12.5	2163301 Th. 17
20731 152 0 4	21142 155 0 4	21333 150 0 5	21344 160 0 5	21500 148 0 5	21559 125 0 4	21633 170 1 5
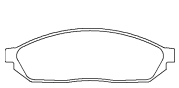	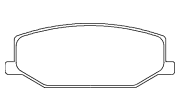	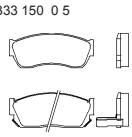	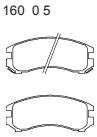	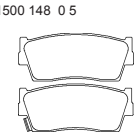		
119.3 x 37.7	110.3 x 41.5	107.3 x 44.6	114.8 x 47.5	103.4 x 43.6	102.1 x 39.1	137.3 x 53

2171901 Th. 14.6	2172001 Th. 14.6	2173001 Th. 14	2190701 Th. 15.4	2329601 Th. 15	2330301 Th. 15.2	2331401 Th. 14.5
21719 146 0 5	21720 146 1 5	21730 140 0 4	21907 154 0 5	23296 150 0 5	23303 152 0 5	23314 145 1 4
88.7 x 46.8	88.8 x 47.5	109.2 x 43.9	116.5 x 45.5	131.2 x 45.2	102.2/88.2 x 40	110.4 x 54.9

SUZUKI

2340001 Th. 16.5
23400 165 1 4
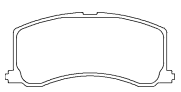
111.4 x 48.5

2350701 Th. 15
23507 150 0 5

108.6 x 45.4

2350801 Th. 17
23508 170 0 5

108.3 x 45.3

2360501 Th. 15.5
23605 155 1 5
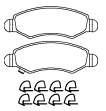
130.9 x 44.5

2366201 Th. 15
23662 150 1 4

106.4 x 49.9

2379501 Th. 15
23795 150 0 5
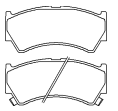
108.5 x 49.4

2381701 Th. 17
23817 170 0 5
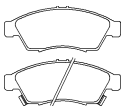
136.4 x 52.5

2387101 Th. 13.8
23871 138 0 5
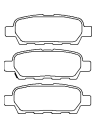
105.4 x 36.5

2396201 Th. 15.5
23962 155 1 5
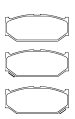
108.5 x 45.3

2396302 Th. 15.5
23963 155 0 5
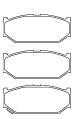
108.5 x 45.3

2397302 Th. 17.3
23973 173 1 5
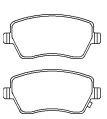
116.4 x 52.5

2404001 Th. 14.4
24040 144 0 5
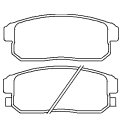
105.7 x 43

2422701 Th. 16.5
24227 165 0 5
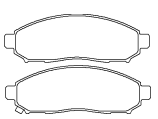
163.8 x 54.1

2428001 Th. 16
24280 160 1 5
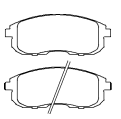
137.2 x 53

2428303 Th. 16.5
24283 165 1 5
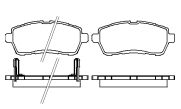
125.6 x 51.7

2430101 Th. 16.4
24301 164 0 4
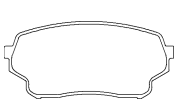
123 x 55.3

2434601 Th. 17
24346 171 1 4
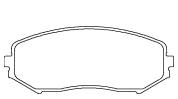
137.9 x 54.9

2439101 Th. 16
24391 160 1 5
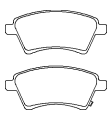
131.5 x 56.9

2466301 Th. 14
24663 140 0 4
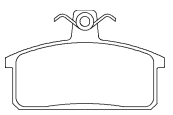
99 x 61.5

2483001 Th. 15.5
24830 155 0 5
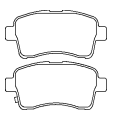
116.6 x 55.9

2487101 Th. 13.8
24871 138 0 5
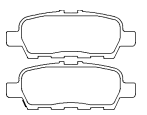
105.4 x 39.4

2520201 Th. 16.8
25202 168 1 4
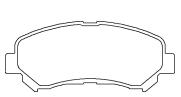
141.7 x 58.6

2525801 Th. 14.3
25258 143 1 5
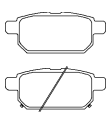
98.5 x 40

SUZUKI (CHANGAN)

2156101 Th. 17
21561 170 0 5
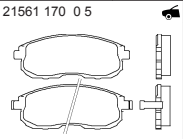
137.1 x 53

2171901 Th. 14.6
21719 146 0 5
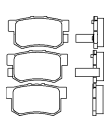
88.7 x 46.8

SUZUKI (CHANGHE)

2366201 Th. 15
23662 150 1 4

106.4 x 49.9

TATA (TELCO)

2124501 Th. 17.4
21245 174 0 5
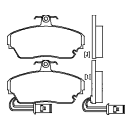
129.1 x 68.1

2124502 Th. 17.4
21245 174 0 4
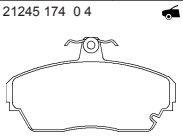
129.1 x 68.1

2133301 Th. 15
21333 150 0 5
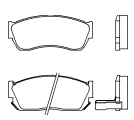
107.3 x 44.6

TOYOTA

2007601 Th. 15.5	2032501 Th. 17.5	2085201 Th. 15.5	2087001 Th. 15	2115801 Th. 15.6	2146801 Th. 15.5	2149001 Th. 17.1
20076 155 0 5	20325 175 0 5	20852 155 0 4	20870 150 0 4	21158 156 0 4	21468 155 0 4	21490 171 0 5
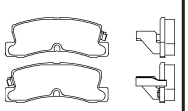	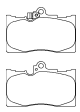	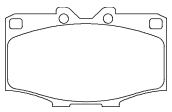	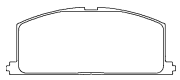		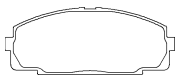	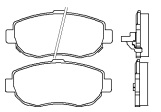
107.6 x 42.5	118.6 x 77.5	107.2 x 66	119.4 x 47	140 x 55.5	145.4 x 56.9	144.3 x 63.8

2149101 Th. 15.5	2160101 Th. 17.6	2165001 Th. 15	2167901 Th. 15	2167904 Th. 15	2168001 Th. 15	2168003 Th. 17.5
21491 155 0 5	21601 176 0 5	21650 150 1 4	21679 150 0 5 T4067	21679 150 0 5 T4136	21680 150 0 5	21680 175 0 5
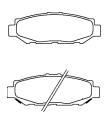	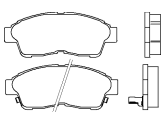	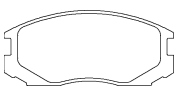			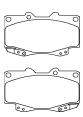	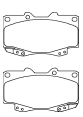
122.2 x 40.9	133.2 x 53	114 x 50	119.2/119.2 x 68.1/73.5	119.2/119.2 x 68.1/73.5	119.2 x 68.1	119.2 x 68.1

2168801 Th. 15.3	2168901 Th. 15.5	2175901 Th. 15.3	2178401 Th. 15	2178403 Th. 15	2178601 Th. 15.5	2179101 Th. 17
21688 153 0 4	21689 155 0 4	21759 153 0 5	21784 150 0 5	21784 150 0 4	21786 155 0 5	21791 170 0 4
		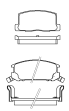	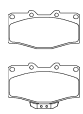	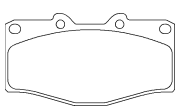	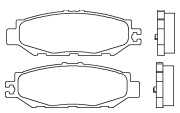	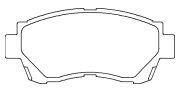
119.7 x 42.7	140.1 x 55	98.5/106.7 x 47.1/47	119.2 x 64.5	119.2 x 64.4	122 x 41	141 x 62.5

2183301 Th. 15.5	2183601 Th. 15.5	2194701 Th. 15	2195501 Th. 16	2195701 Th. 17	2196102 Th. 15.5	2197502 Th. 18.2
21833 155 0 5	21836 155 0 5	21947 150 0 4	21955 160 0 5	21957 170 0 5	21961 155 1 4	21975 182 0 5
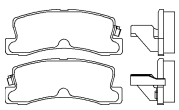	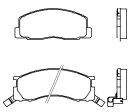		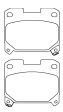	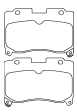	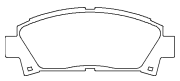	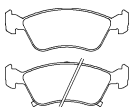
107.6 x 42.5	128.4/136.9 x 52/55	115.9 x 43.9	80.8 x 68.8	119.2 x 80.3	140.9 x 55.9	156.3 x 54.6

2300901 Th. 15.5	2303201 Th. 15.5	2308801 Th. 17.6	2329402 Th. 16.5	2334001 Th. 16.8	2334803 Th. 16.5	2334901 Th. 16.5
23009 155 0 5	23032 155 0 5	23088 176 0 5	23294 165 0 4	23340 168 1 5	23348 165 0 5	23349 165 0 5
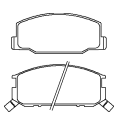	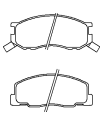	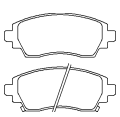	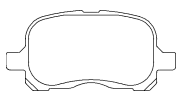	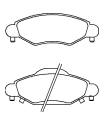	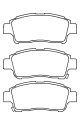	
128.2/128.2 x 55/55	128.3/126.8 x 52.1/55	131.7 x 51.8	116.8 x 55.2	130.9 x 45/51	112.3 x 46.6	112.3 x 46.4/49.4

2342901 Th. 15	2349101 Th. 12.5	2349701 Th. 15.5	2350701 Th. 15	2351002 Th. 15.5	2351302 Th. 17	2352101 Th. 14
23429 150 0 4	23491 125 0 4	23497 155 0 5	23507 150 0 5	23510 155 0 5	23513 170 1 4	23521 140 0 5
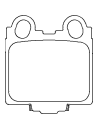	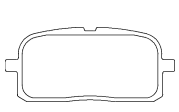		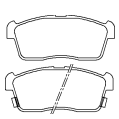	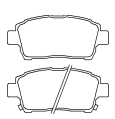		
57.2 x 63.6	86.9 x 37.9	115.7 x 49.4	108.6 x 45.4	116.4 x 51.3	116.7 x 59.5	78.7/78.7 x 50.9/54.2

2352402 Th. 17.7	2353902 Th. 17.5	2355802 Th. 17	2358501 Th. 17	2359201 Th. 15	2362002 Th. 16.6	2364601 Th. 16
23524 177 0 5	23539 175 0 4	23558 170 0 5	23585 170 0 5	23592 150 0 4	23620 166 1 5	23646 160 0 5
119.5 x 78	123.1 x 45.1	138 x 59.5	123.1 x 60.3	82.6 x 38.5	101.9 x 46.9	112.5 x 43

2365601 Th. 14	2370201 Th. 15.8	2370301 Th. 18.5	2373401 Th. 17	2375901 Th. 17	2376601 Th. 17.8	2376802 Th. 19
23656 140 0 5	23702 158 0 4	23703 185 1 4	23734 170 0 4	23759 170 0 4	23766 178 0 5	23768 190 1 5
78.3 x 54.1	92.9 x 37.8	138.8 x 59.3	140.7 x 59.4	125.6 x 59.5	131.5 x 57.3	151 x 63.1

2381601 Th. 15.8	2383601 Th. 16.7	2385501 Th. 16	2386401 Th. 17	2390401 Th. 16.6	2392801 Th. 17	2395901 Th. 17.5
23816 158 1 4	23836 167 1 4	23855 160 0 4	23864 170 0 4	23904 166 0 5	23928 170 0 4	23959 175 1 4
95.5 x 37.8	123.1 x 59.5	143.4 x 58.5	117.5 x 58.5	116.6/116.6 x 51.4/54.4	131.6 x 58.3	122.8 x 47.2

TOYOTA

2396701 Th. 15.2	2399601 Th. 18.3	2401301 Th. 15	2402201 Th. 17.7	2402401 Th. 17.8	2402403 Th. 17	2412201 Th. 19.2
23967 152 0 4	23996 183 0 5	24013 150 1 5	24022 177 0 5	24024 178 0 5 T4361	24024 170 0 5 T4146	24122 192 1 5
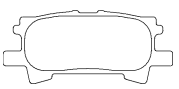	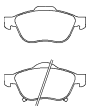	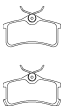	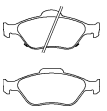	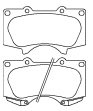	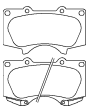	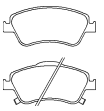
101.8 x 44.3	156.4/155 x 68.4/70.8	87 x 45.9/50	150.1/151.3 x 61/57.8	134.5 x 77.1	134.5 x 77	136.8 x 57.9/61.4

2420401 Th. 19.2	2427101 Th. 14.7	2432301 Th. 15.5	2433601 Th. 17.5	2433701 Th. 17.6	2433801 Th. 15.4	2434701 Th. 18.6
24204 192 1 5	24271 147 1 5	24323 155 0 5	24336 175 0 4	24337 176 0 4	24338 154 0 4	24347 186 0 4
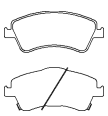	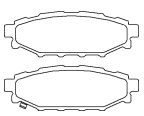	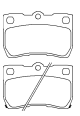	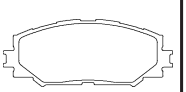		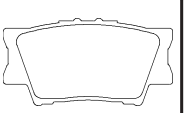	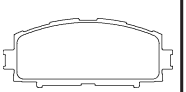
150.8 x 65.3	110.4 x 37.3	88.1 x 58	139.2 x 55.9	146.5 x 57	96.8 x 49.2	122.7 x 49.8

2435001 Th. 17.6	2438601 Th. 17.9	2445101 Th. 15.6	2445103 Th. 17.2	2445201 Th. 17.5	2452201 Th. 16.9	2452301 Th. 16.4
24350 176 0 4	24386 179 0 5	24451 156 0 4	24451 172 1 4	24452 175 1 4	24522 169 0 4	24523 164 0 5
	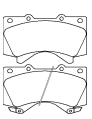			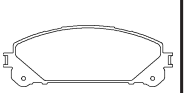	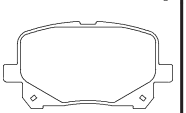	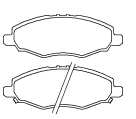
157.7 x 56.9	143.7 x 83.2	122.8 x 49.6	122.8 x 49.6	166.6 x 59.4	116.1 x 59.5	146.8 x 53.2

2456701 Th. 15.5	2457401 Th. 15	2457801 Th. 16.6	2459501 Th. 18.3	2460101 Th. 18	2461001 Th. 14.3	2465301 Th. 17.4
24567 155 0 4	24574 150 0 5	24578 166 1 4	24595 183 1 5	24601 180 0 4	24610 143 0 5	24653 174 0 4
		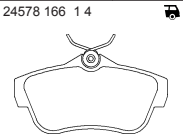			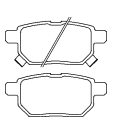	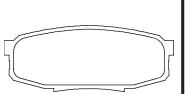
140.2 x 52	123.2 x 43.7	113.5 x 58.2	162.2 x 66.8	147.7 x 60.7	98.7 x 42.6	116.2 x 44.8

2466401 Th. 16	2466801 Th. 18.9	2468001 Th. 15.5	2470801 Th. 17.6	2477801 Th. 16.6	2481301 Th. 18	2483501 Th. 15.4
24664 160 1 5	24668 189 1 5	24680 155 0 4	24708 176 0 4	24778 166 0 5	24813 180 0 5	24835 155 1 4
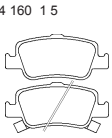	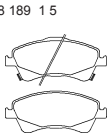			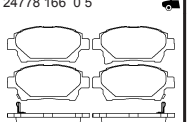	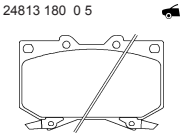	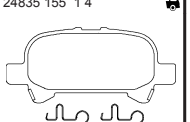
102.2 x 45.9	151 x 65.3	145.3 x 56	122.7 x 54.3	116.5 x 51.3/53.8	120 x 78.8	99.5 x 44

2484401 Th. 17.9	2485401 Th. 16	2488501 Th. 16.5	2489201 Th. 18	2490201 Th. 15.5	2491801 Th. 15	2492601 Th. 16.6
24844 179 0 5	24854 160 1 5	24885 165 1 5	24892 180 0 5	24902 155 0 5	24918 150 0 4	24926 166 1 5
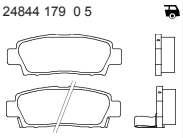	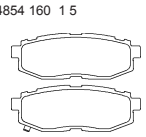	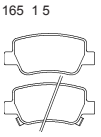	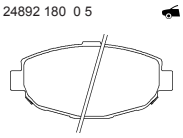	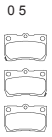		
106 x 38.2	110.6 x 39.5	108.8 x 49.9	143.9 x 68.6	88 x 58.2	115.1 x 45.6	101.9 x 48.8

2494601 Th. 19.1	2500601 Th. 19.3	2501601 Th. 14.3	2520901 Th. 16.8	2524601 Th. 15.6	2526201 Th. 15.4	2531601 Th. 16.5
24946 191 1 5	25006 193 1 5	25016 143 0 5	25209 168 0 5	25246 156 0 4	25262 154 1 5	25316 165 0 5
150.9 x 61.1	150.8 x 61	98.5 x 42.4	143.4 x 67.4	140 x 55.1	108.3 x 45.4	116.3 x 50.2 x 54.8/49.9

2548101 Th. 15.2	2559901 Th. 16	2561001 Th. 18.7	2569801 Th. 18.7	2576001 Th. 16.7	2929601 Th. 20
25481 152 0 4	25599 160 1 5	25610 187 1 5	25698 187 1 5	25760 167 1 5	29296 200 0 5 T3035
113.3 x 40.7	113.8 x 56	151.1 x 53.2	134.2 x 57.1/63.3	137.1 x 56.8	166.4 x 63.3

TOYOTA (FAW)

2165001 Th. 15
21650 150 1 4

114 x 50

2194701 Th. 15
21947 150 0 4

115.9 x 43.9

2352101 Th. 14
23521 140 0 5
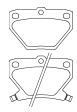
78.7/78.7 x 50.9/54.2

2352402 Th. 17.7
23524 177 0 5
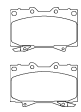
119.5 x 78

2353902 Th. 17.5
23539 175 0 4

123.1 x 45.1

2359201 Th. 15
23592 150 0 4
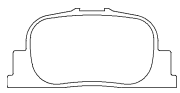
82.6 x 38.5

2386401 Th. 17
23864 170 0 4
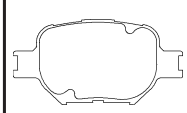
117.5 x 58.5

2390401 Th. 16.6
23904 166 0 5
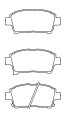
116.6/116.6 x 51.4/54.4

2402401 Th. 17.8
24024 178 0 5 T4361
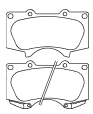
134.5 x 77.1

2433601 Th. 17.5
24336 175 0 4

139.2 x 55.9

2433701 Th. 17.6
24337 176 0 4

146.5 x 57

2433801 Th. 15.4
24338 154 0 4
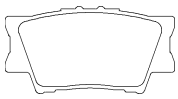
96.8 x 49.2

2438601 Th. 17.9
24386 179 0 5
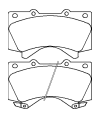
143.7 x 83.2

2445101 Th. 15.6
24451 156 0 4

122.8 x 49.6

2461001 Th. 14.3
24610 143 0 5
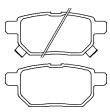
98.7 x 42.6

2490201 Th. 15.5
24902 155 0 5
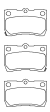
88 x 58.2

TOYOTA (GAC)

2433801 Th. 15.4
24338 154 0 4
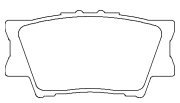
96.8 x 49.2

2434701 Th. 18.6
24347 186 0 4
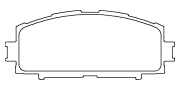
122.7 x 49.8

2435001 Th. 17.6
24350 176 0 4

157.7 x 56.9

2445101 Th. 15.6
24451 156 0 4

122.8 x 49.6

2548101 Th. 15.2
25481 152 0 4
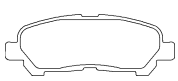
113.3 x 40.7

TROLLER

2342401 Th. 17.8
23424 178 1 4
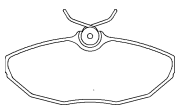
114.1 x 49.5

TVR

2098101 Th. 13.7
20981 137 1 4
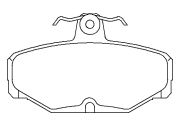
89.9 x 53.6

2310301 Th. 17.5
23103 175 0 5
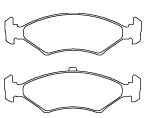
150.1 x 46.4

VAUXHALL

2022401 Th. 20.9
20224 209 0 5
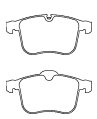
155.1/156.4 x 73.1/77.6

2032306 Th. 14.5
20323 145 0 4
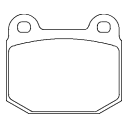
76.7 x 65.8

2041003 Th. 12.9
20410 129 0 5
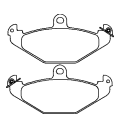
126.2 x 58.3

2054701 Th. 16.8
20547 168 0 5
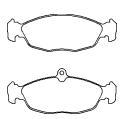
140.1/141.3 x 58.3/48.2

2092602 Th. 18.5
20926 185 0 5
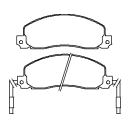
155.7 x 56.5

2105002 Th. 15.2
21050 152 0 4

61.6 x 61.1

2114001 Th. 15.7
21140 157 0 4
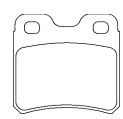
61.8 x 57.5

VAUXHALL

2136801 Th. 18.3	2141101 Th. 17.5	2154302 Th. 16.5	2184501 Th. 16.5	2186201 Th. 18.3	2187503 Th. 15.8	2306302 Th. 17.3
21368 183 1 5	21411 175 0 5	21543 165 0 5	21845 165 0 5	21862 183 0 5	21875 158 0 5	23063 173 0 5
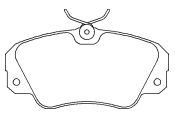	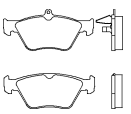	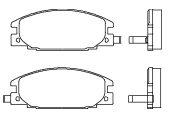	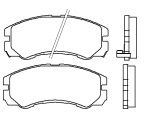	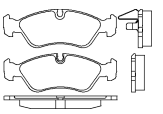	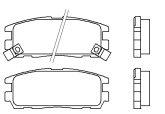	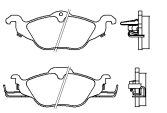
129.8 x 63.9	155.2/156.3 x 70.8/60.6	127.3 x 49.3	137.8 x 58.6	156.3 x 52.5	109.5 x 42.6	177.6/160 x 62.1/62.8

2309902 Th. 18.4	2311502 Th. 19.6	2311701 Th. 20.2	2322501 Th. 17	2325001 Th. 16.5	2325803 Th. 16.9	2328404 Th. 14
23099 184 1 4	23115 196 0 5	23117 202 0 5	23225 170 1 5	23250 165 0 5	23258 169 2 5	23284 140 1 4
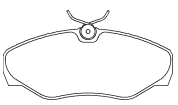	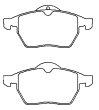	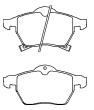	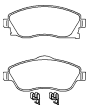	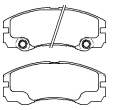	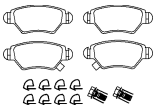	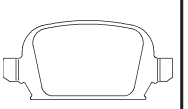
145.1 x 62.4	156.3/155.3 x 74/73.9	156.5/155.3 x 74	131.5/131.5 x 51.4/55.4	137.6 x 58.5	104.9 x 42.7	95.6 x 43.9

2330201 Th. 17.5	2332502 Th. 16	2335801 Th. 18	2336101 Th. 15	2340404 Th. 20.4	2341702 Th. 15.2	2341703 Th. 15.2
23302 175 0 4	23325 160 0 4	23358 180 0 5	23361 150 0 5	23404 204 1 5	23417 152 1 4	23417 152 1 5
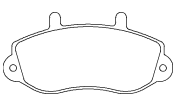	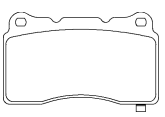	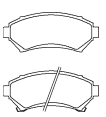	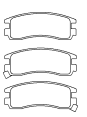	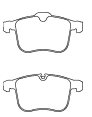		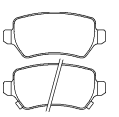
138.7 x 66.7	131.8 x 77.5	148.1 x 61.1	107.8 x 41	155.1/156.4 x 73.1/77.6	95.3 x 42.8	95.5 x 42.8

2341781 Th. 15.2	2360501 Th. 15.5	2361301 Th. 17.8	2366901 Th. 16.8	2370802 Th. 19	2370881 Th. 19	2373807 Th. 20.6
23417 152 1 4 epad	23605 155 1 5	23613 178 0 4	23669 168 1 4	23708 182 1 5	23708 182 1 5 epad	23738 206 0 5
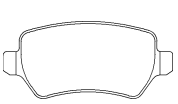	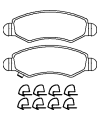	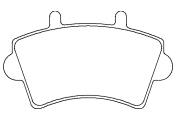		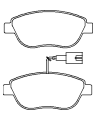	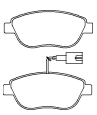	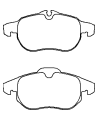
95.3 x 42.8	130.9 x 44.5	139 x 79.8	115.7 x 51.3	137 x 57.4	137 x 57.4	155.3/156.5 x 69.6/70.7

2383201 Th. 19.6	2383281 Th. 19.6	2391202 Th. 20.4	2397302 Th. 17.3	2398001 Th. 17	2398101 Th. 19.2	2398202 Th. 17.8
23832 196 0 5	23832 196 0 5 epad	23912 204 0 5	23973 173 1 5	23980 170 1 4	23981 192 1 5	23982 178 1 5
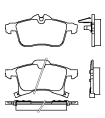	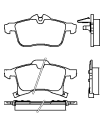		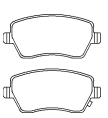	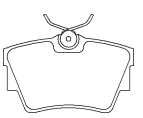	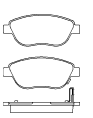	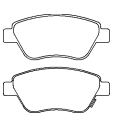
156.3/155.1 x 76/69.6	156.3/155.1 x 76/69.6	156.3/155.3 x 72.9	116.4 x 52.5	94.6 x 57.3	137.2 x 57.4	123 x 53.3

2413701 Th. 16.7	2413781 Th. 16.7	2415501 Th. 20.6	2434903 Th. 17.5	2441201 Th. 19.1	2441501 Th. 19.1	2441801 Th. 17.2
24137 167 0 5	24137 167 0 5 epad	24155 206 0 5	24349 175 2 4	24412 191 1 5	24415 191 1 5	24418 172 1 5
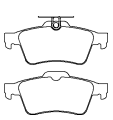	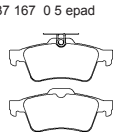	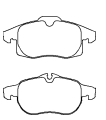				
123.2 x 51.9	123.2 x 51.9	155.3/156.5 x 69.6/70.7	101.7 x 47.3	142.1 x 66.7	131.5 x 59.7	184.5 x 65.6

2442101 Th. 17.3	2442102 Th. 17.3	2449801 Th. 15.4	2451001 Th. 16.9	2455001 Th. 20.2	2472701 Th. 20	2481501 Th. 14.5
24421 173 1 5	24421 173 2 5	24498 154 0 5	24510 169 0 5	24550 202 1 5	24727 200 0 5	24815 145 0 5
106.4 x 47.1	106.4 x 47.1	110.9 x 45.7	149.4 x 62	150.8 x 55.3	156.3/155.1 x 71.5/69	183.6 x 64

2481801 Th. 18.5	2503101 Th. 18.8	2503181 Th. 18.8	2503401 Th. 18.8	2503481 Th. 18.8	2509501 Th. 17	2509601 Th. 16.2
24818 185 0 5	25031 188 1 5	25031 188 1 5	25034 188 1 5	25034 188 1 5 epad	25095 170 1 5	25096 162 1 5
113.8 x 57.9	148 x 60.3	148 x 60.3	148 x 61.1	148 x 61.1	123 x 53.6	116.6 x 42.6

2509602 Th. 16.2	2509681 Th. 16.2	2511201 Th. 18.1	2514701 Th. 18	2517201 Th. 18
25096 162 9 5	25096 162 1 5 epad	25112 181 0 5	25147 180 0 5	25172 180 0 5
116.6 x 42.6	116.6 x 42.6	128.6 x 59.8	163.6 x 64.5	163.6 x 62.8

VOLKSWAGEN

2000906 Th. 15	2012401 Th. 19	2016801 Th. 16.2	2016804 Th. 19.6	2088707 Th. 15.3	2088708 Th. 17.3	2088710 Th. 19.7
20009 150 0 4	20124 190 1 4	20168 162 1 4	20168 196 1 4	20887 153 2 5	20887 173 2 5	20887 197 2 5
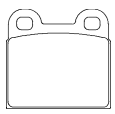	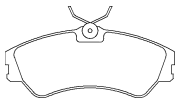	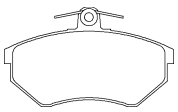	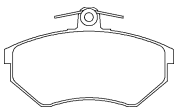	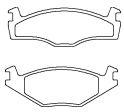	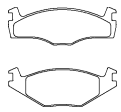	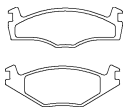
55.4 x 53.3	129.8 x 54.5	118.9 x 69	118.9 x 69	137.7/137.7 x 48.8/48.2	137.7/137.7 x 48.8/48.2	137.7/137.7 x 48.8/48.2

2119301 Th. 18	2147902 Th. 19.2	2147903 Th. 19.2	2148401 Th. 20.8	2162402 Th. 20.4	2163501 Th. 18.2	2166201 Th. 17.8
21193 180 0 5	21479 192 1 4	21479 192 1 5	21484 208 0 5	21624 204 0 5	21635 182 1 5	21662 178 1 4
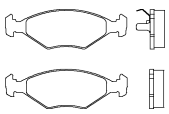	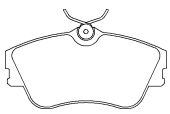	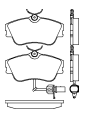	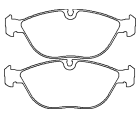	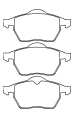		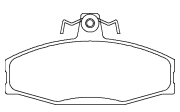
151.5 x 49.2	129.9 x 65.2	129.9 x 65.2	194.5 x 73.5	156.2 x 74	91.8 x 80	114.8 x 61

2184802 Th. 19.7	2184903 Th. 20.6	2186601 Th. 15.3	2186602 Th. 17.2	2186603 Th. 19.7	2186801 Th. 17.2	2188302 Th. 19.6
21848 197 0 5	21849 206 0 5	21866 153 0 5	21866 172 0 5	21866 197 0 5	21868 172 0 5	21883 196 0 5
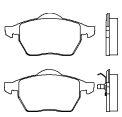	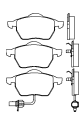	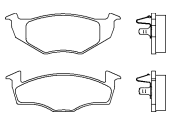	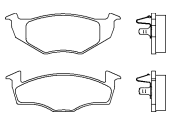	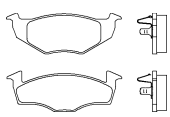	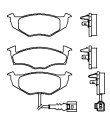	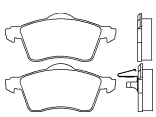
155.8/156.6 x 74.2/74.2	156.6 x 74	141.6/141.6 x 51.2/50.3	141.6/141.6 x 51.2/50.3	141.6/141.6 x 51.2/50.3	141.6/141.6 x 51.2/50.3	156.3 x 68.5

2188501 Th. 20.6	2191102 Th. 20.6	2193801 Th. 20.4	2193881 Th. 20.4	2194502 Th. 16.2	2194503 Th. 19.6	2194504 Th. 19.6
21885 206 0 5	21911 206 0 5	21938 204 0 5	21938 204 0 5 epad	21945 162 1 4	21945 196 1 4	21945 196 1 5
	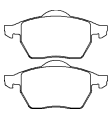	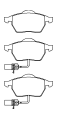	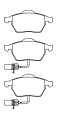	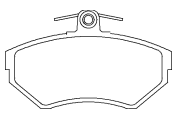	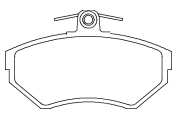	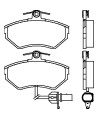
156.5 x 68.5	156.4 x 74	156.4 x 74	156.4 x 74	119.2 x 69.5	119.2 x 69.5	119.2 x 69.5

2196202 Th. 15	2301802 Th. 20.4	2301881 Th. 20.4	2302101 Th. 18.9	2303401 Th. 18.6	2313001 Th. 19.7	2313081 Th. 19.7
21962 150 0 5	23018 204 0 5	23018 204 0 5 epad	23021 189 0 4	23034 186 0 5	23130 197 0 5	23130 197 0 5 epad
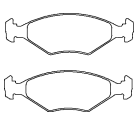	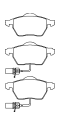	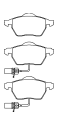	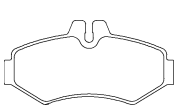	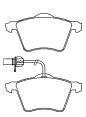	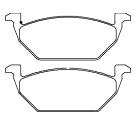	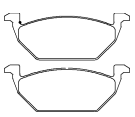
151.5 x 49.2	156.4 x 74	156.4 x 74	125.7 x 61.5	156.3 x 78.5	146 x 54.6	146 x 54.6

2313101 Th. 19.7	2313181 Th. 19.7	2317602 Th. 18.2	2322416 Th. 17.3	2326903 Th. 20.1	2328001 /18.3	2332601 Th. 17.7
23131 197 0 5	23131 197 0 5 epad	23176 182 1 5	23224 173 1 5	23269 201 0 5	23280 183 0 5	23326 177 1 4
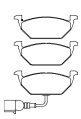	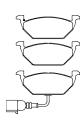	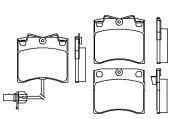	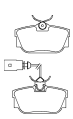	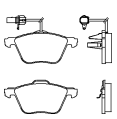		
146 x 54.7	146 x 54.7	91.8 x 80	94.8 x 51	161.3 x 74.4/72.9	63.5/78.3 x 75.3/74.6	116.5 x 59

2332602 Th. 17.7	2332603 Th. 17.7	2332681 Th. 17.7	2339201 Th. 20.6	2339402 Th. 14.5	2341801 Th. 19.6	2344605 Th. 16.5
23326 177 2 4	23326 177 3 4	23326 177 1 4 epad	23392 206 0 5	23394 145 0 5	23418 196 0 5	23446 165 1 5
116.5 x 59	116.5 x 59	116.5 x 59	156.5 x 74.2	141.7/141.7 x 49.9/48.2	156.5 x 78.5	94.8 x 51

2346901 /20.1	2354601 Th. 16	2355401 Th. 15.2	2355402 Th. 17.2	2355403 Th. 17.2	2355481 Th. 17.2	2355482 Th. 15.2
23469 201 0 5	23546 160 1 5	23554 152 1 4	23554 172 1 4	23554 172 1 5	23554 172 1 4 epad	23554 152 1 4 epad
155.1/156.3 x 73.3/74.8	104.2 x 53.4	87 x 53	87 x 53	87 x 53	87 x 53	87 x 53

2358101 Th. 19	2358102 Th. 19	2358701 Th. 20.3	2358704 Th. 20.3	2358781 Th. 20.3	2358782 Th. 20.3	2369202 Th. 16.7
23581 190 1 4	23581 190 1 5	23587 203 0 5	23587 203 9 5	23587 203 0 5 epad	23587 203 9 5 epad	23692 167 0 4
131.4 x 60	131.4 x 62.6	156.5/155.3 x 71.3/66	155.3/156.5 x 66/71.3	156.5/155.3 x 71.3/66	155.3/156.5 x 66/71.3	190 x 99.1

VOLKSWAGEN

2369281 Th. 16.7	2369302 Th. 16.7	2369381 Th. 16.7	2369402 Th. 16.7	2369481 Th. 16.7	2374601 Th. 18	2374602 Th. 20.1
23692 167 0 4 epad	23693 167 0 4	23693 167 0 4 epad	23694 167 0 4	23694 167 0 4 epad	23746 180 0 5	23746 201 0 5
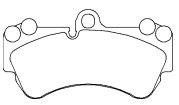	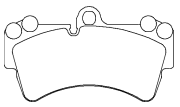	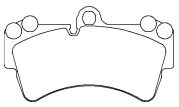	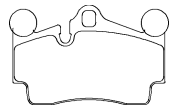	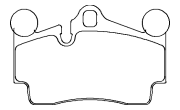		
190 x 99.1	190 x 106.3	190 x 106.3	117 x 73	117 x 73	155.3/156.5 x 73.3/74.8	155.3/156.5 x 73.3/74.8

2374701 Th. 18	2374702 Th. 20.1	2374901 /18.8	2375101 Th. 16.7	2380101 Th. 20.3	2380181 Th. 20.3	2382301 Th. 17.2
23747 180 0 5	23747 201 0 5	23749 188 0 5	23751 167 0 5	23801 204 0 5	23801 204 0 5 epad	23823 172 1 5
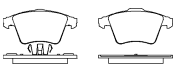	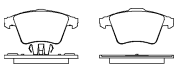	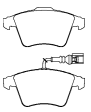		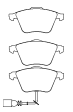	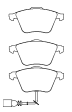	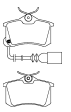
155.1/156 x 73.3/74.8	155.1/156 x 73.3/74.8	156 x 75/73.2	95.7 x 74.2	156.3/155.1 x 72.9	156.3/155.1 x 72.9	87 x 53

2389601 Th. 20.5	2390101 Th. 18.8	2391301 Th. 20.3	2391401 Th. 17.2	2391402 Th. 17.2	2391481 Th. 17.2	2391482 Th. 17.2
23896 204 0 5	23901 188 1 5	23913 203 0 5	23914 172 1 4	23914 172 2 4	23914 172 1 4 epad	23914 172 2 4 epad
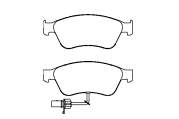	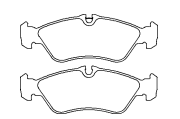	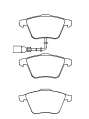	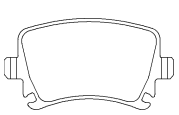	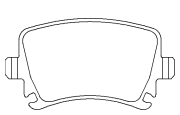	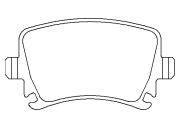	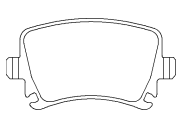
193.2/193.4 x 72.6	156.4 x 54.3	155.1/156.3 x 72.9	105.5 x 56.5	105.5 x 56.5	105.5 x 56.5	105.5 x 56.5

2399002 Th. 20.7	2409701 Th. 17.1	2409801 Th. 17.1	2433301 /20.6	2433401 /20	2436701 Th. 19	2436801 Th. 19
23990 207 1 5	24097 171 0 4	24098 171 0 4	24333 199 0 5	24334 200 0 5	24367 190 0 5	24368 190 0 5
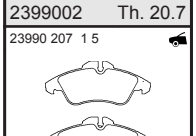	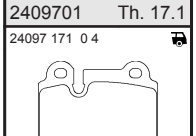	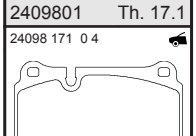	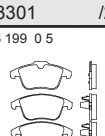	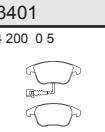	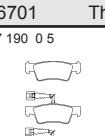	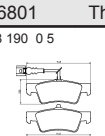
156.5 x 64.8	86.9 x 70.1	131.8 x 77.2	155.1 x 72.2/66.4	155.2 x 66.4/71.9	141.7/141.2 x 50.9/53.9	141.7/141.2 x 50.9/53.9

2448301 Th. 17.2	2448302 Th. 17.2	2448381 Th. 17.2	2448382 Th. 17.2	2448404 Th. 18.9	2455301 Th. 16.1	2456301 Th. 17.7
24483 172 1 4	24483 172 2 4	24483 172 1 4 epad	24483 172 2 4 epad	24484 189 2 4	24553 161 0 4	24563 177 1 4
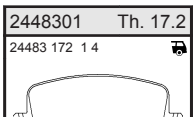	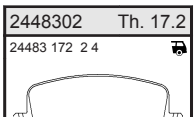	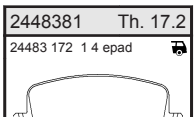	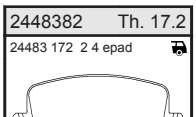	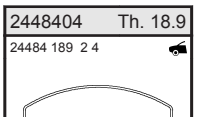	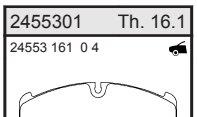	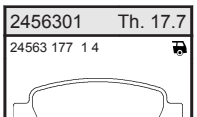
105.5 x 56.3	105.5 x 56.3	105.5 x 56.3	105.5 x 56.3	164.9 x 66.7	209.5 x 94.2	109.2 x 53.3

2460402 Th. 17.5	2461401 Th. 16.6	2462301 Th. 18.1	2472101 Th. 17.2	2473801 Th. 20	2473901 Th. 17.3	2482201 Th. 17
24604 175 1 5	24614 166 0 4	24623 181 0 5	24721 172 0 4	24738 200 1 5	24739 173 1 5	24822 170 1 4
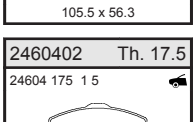	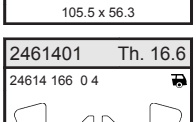	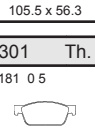	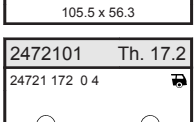	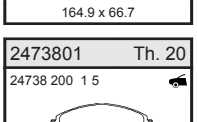		
146.6 x 63.4	132.1 x 81.5	193.1 x 75	187.5 x 79.8	175 x 69.5	141.3 x 46.5	116.7 x 52.7

2500701 Th. 17.1	2500801 Th. 16.4	2500901 Th. 16.4	2537601 Th. 17.6	2537801 Th. 18.1	2568101 Th. 18	2568301 Th. 20.3
25007 171 0 4	25008 164 0 5	25009 164 0 5	25376 176 1 5	25378 181 1 5	25681 180 1 5	25683 203 1 5
209.5 x 94.2	123 x 61.2/56.2	123 x 61.2/56.2	130 x 54.7	183 x 63.2	131 x 52.2	160 x 64.8

2915301 Th. 20	2919001 Th. 19	2919202 Th. 20.9	2920002 Th. 20.9	2921702 Th. 20.6
29153 200 1 4 T3011	29190 190 1 5 T3035	29192 209 4 4 T3036	29200 209 2 4 T3036	29217 206 1 5 T3038
164.7 x 73	137 x 63	163.3 x 67.1	169.3 x 73.5	165 x 79

VOLKSWAGEN (FAW)

2358701 Th. 20.3	2358781 Th. 20.3
23587 203 0 5	23587 203 0 5 epad
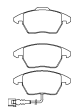	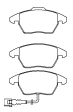
156.5/155.3 x 71.3/66	156.5/155.3 x 71.3/66

VOLKSWAGEN (SVW)

2355402 Th. 17.2	2355481 Th. 17.2	2433301 /20.6
23554 172 1 4	23554 172 1 4 epad	24333 199 0 5
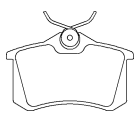		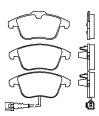
87 x 53	87 x 53	155.1 x 72.2/66.4

VOLVO

2075506 Th. 15	2127304 Th. 19.5	2138102 Th. 15	2138501 Th. 13.9	2149201 Th. 19.5	2192001 Th. 15.1	2198302 Th. 17.3
20755 150 1 4	21273 195 0 5	21381 150 0 4	21385 139 1 4	21492 195 0 5	21920 151 1 4	21983 173 1 4
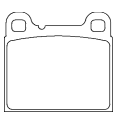	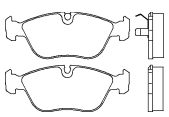	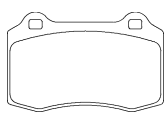		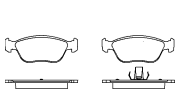	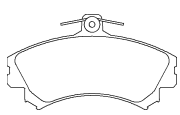	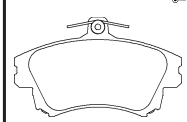
61.4 x 56.2	156.3 x 58.3	109.8 x 69.3	90.1 x 53.6	156.3/155.1 x 58.3/58.3	130 x 72.8	129.9 x 79.6

2307303 Th. 18.9	2307381 Th. 18.9	2307401 Th. 18.9	2307602 Th. 17.5	2307681 Th. 17.5	2309201 Th. 16	2310601 Th. 18.9
23073 189 0 5	23073 189 0 5 epad	23074 189 0 5	23076 175 0 5	23076 175 0 5 epad	23092 160 0 5	23106 189 0 5
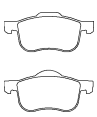	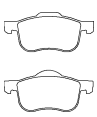	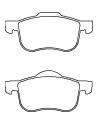	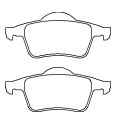	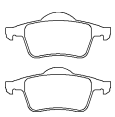	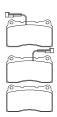	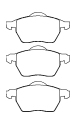
155.1/156.3 x 72.5/69.1	155.1/156.3 x 72.5/69.1	156.3/155.1 x 69.1/69.1	122.4 x 53.9	122.4 x 53.9	131.6 x 77.2	156.3 x 74

2354901 Th. 16.8	2359001 Th. 19	2372301 Th. 18.2	2372381 Th. 18.2	2391201 Th. 18.5	2401101 Th. 17.7	2412301 Th. 20.3
23549 168 1 5	23590 190 0 5	23723 182 0 5	23723 182 0 5 epad	23912 185 0 5	24011 177 0 5	24123 203 0 5
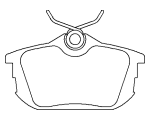	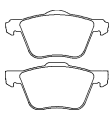	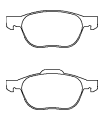	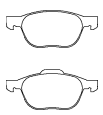	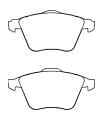	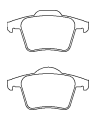	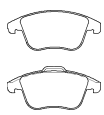
87.2 x 47.1	155.2/156.3 x 72.3/71.3	155.1/155.1 x 62.4/67	155.1/155.1 x 62.4/67	156.3/155.3 x 72.9	123.1/123.1 x 61.9/63.7	155.1/156.3 x 66.6/72

2414101 Th. 19.8	2414201 /19.8	2439901 Th. 20.2	2449601 Th. 16.9	2449602 Th. 16.9	2453702 Th. 15.7	2521201 Th. 16.1
24141 198 0 5	24142 198 0 5	24399 202 0 5	24496 169 1 4	24496 169 2 4	24537 157 2 4	25212 161 0 5
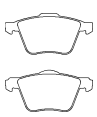	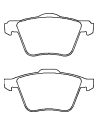	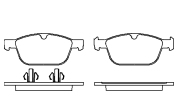			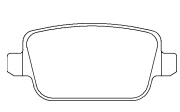	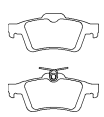
155.1/156.6 x 74.9/74.2	155.1/156.3 x 74.9/74.2	193.3/194.3 x 76.2	106.7 x 48.8	106.7 x 48.8	95.4 x 43.2	123 x 51.9

2521281 Th. 16.1
25212 161 0 5 epad

123 x 51.9

VOLVO (CHANGAN)

2372301 Th. 18.2	2372381 Th. 18.2	2391201 Th. 18.5	2412301 Th. 20.3	2413701 Th. 16.7	2413781 Th. 16.7	2414201 /19.8
23723 182 0 5	23723 182 0 5 epad	23912 185 0 5	24123 203 0 5	24137 167 0 5	24137 167 0 5 epad	24142 198 0 5
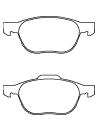	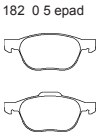	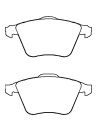	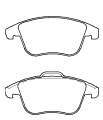	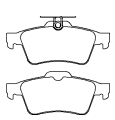	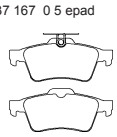	
155.1/155.1 x 62.4/67	155.1/155.1 x 62.4/67	156.3/155.3 x 72.9	155.1/156.3 x 66.6/72	123.2 x 51.9	123.2 x 51.9	155.1/156.3 x 74.9/74.2

VOLVO (CHANGAN)

2449601 Th. 16.9	2449602 Th. 16.9	2453702 Th. 15.7	2521201 Th. 16.1	2521281 Th. 16.1
24496 169 1 4	24496 169 2 4	24537 157 2 4	25212 161 0 5	25212 161 0 5 epad
		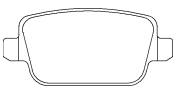		
106.7 x 48.8	106.7 x 48.8	95.4 x 43.2	123 x 51.9	123 x 51.9

WIESMANN

2099501 Th. 17.3	2128201 Th. 17.3	2160702 Th. 17.3	2160781 Th. 17.3	2193402 Th. 17.3	2193481 Th. 17.3	2318302 Th. 20.3
20995 173 0 5	21282 173 0 5	21607 173 0 5	21607 173 0 5 epad	21934 173 0 5	21934 173 0 5 epad	23183 203 0 5
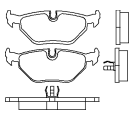	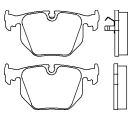	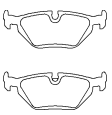	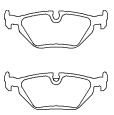	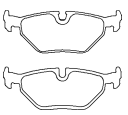	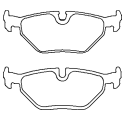	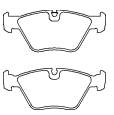
123 x 45	123 x 59.4	123 x 43.7	123 x 43.7	123 x 44.8	123 x 44.8	155.3/155.3 x 63.9/63.9

2328702 Th. 17.8	2328781 Th. 17.8	2347402 Th. 20.3
23287 178 0 5	23287 178 0 5 epad	23474 203 0 5
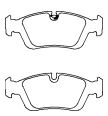	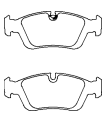	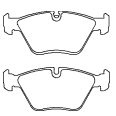
151.3/150.3 x 57.7/57.7	151.3/150.3 x 57.7/57.7	155.3/156.3 x 63.9/63.9

WULING

2090506 Th. 18	2098901 Th. 17.7
20905 180 0 5	20989 177 0 5
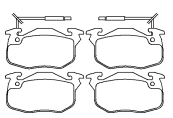	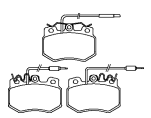
105 x 54.3	89.9 x 62.9

ZASTAVA

2110005 Th. 17	2143602 Th. 17	2143603 Th. 17
21100 170 2 5	21436 170 0 4	21436 170 1 4
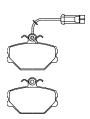	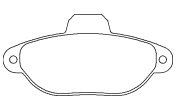	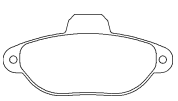
89.9 x 63.4	114.8 x 55.2	114.8 x 55.2

ZAZ

2054701 Th. 16.8	2117002 Th. 17	2186201 Th. 18.3
20547 168 0 5	21170 170 1 4	21862 183 0 5
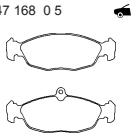	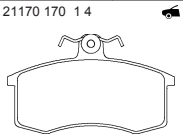	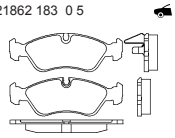
140.1/141.3 x 58.3/48.2	104.4 x 62.1	156.3 x 52.5

2000201

20002 150 0 5

FORD AUSTRALIA, KIA, MAZDA

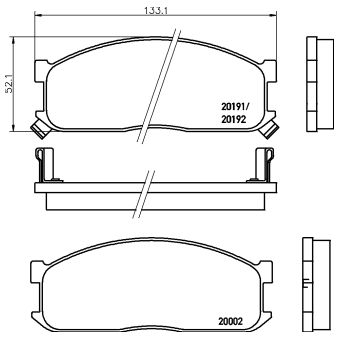

15

2000702

20007 152 0 4

ASTON MARTIN

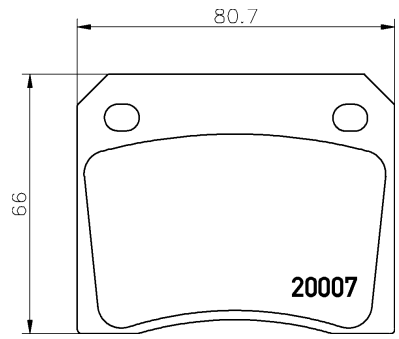

15.2

2000801

20008 130 0 4

DAIHATSU, MAZDA

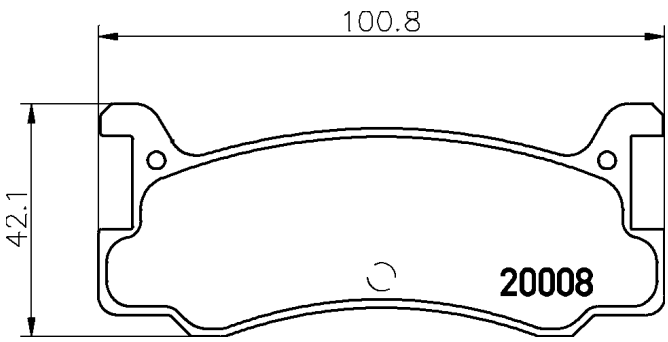

13

2000906

20009 150 0 4

VOLKSWAGEN

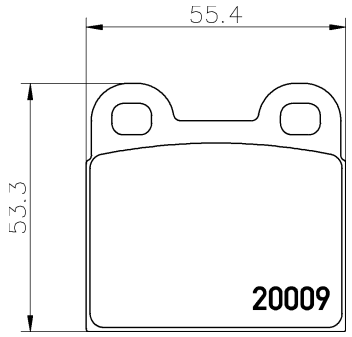

15

2002701

20027 160 0 4

ASTON MARTIN

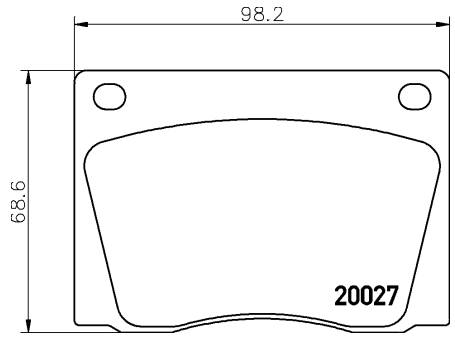

16

2003101

20031 130 0 4

MAZDA

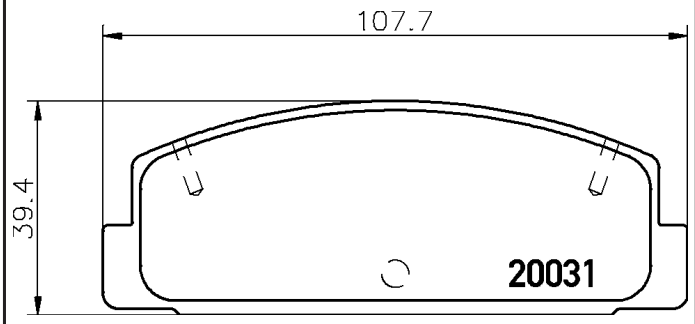

13

2003801

20038 138 0 4

ROVER

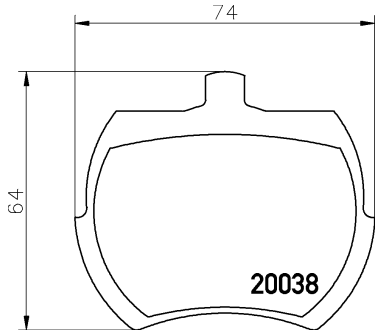

13.8

2007304

20073 173 0 4

FIAT, FSO

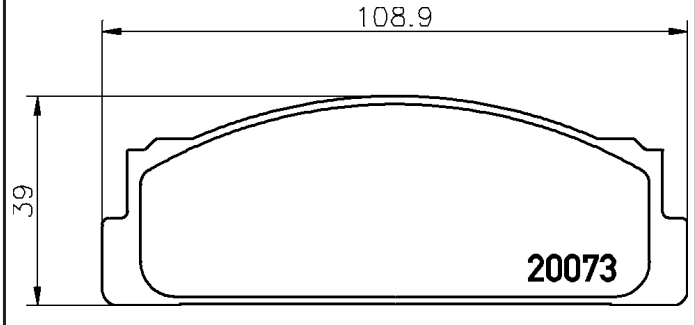

17.3

2007404

20074 100 0 4

FSO

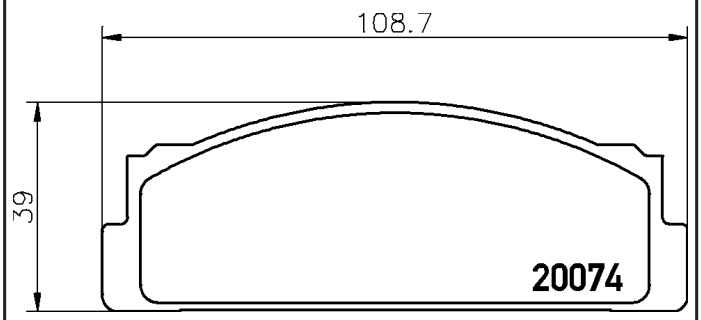

10

2007601

20076 155 0 5

TOYOTA

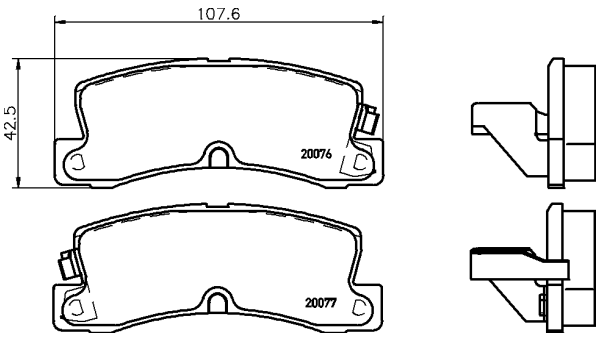

15.5

2008701

20087 140 0 5

ROVER

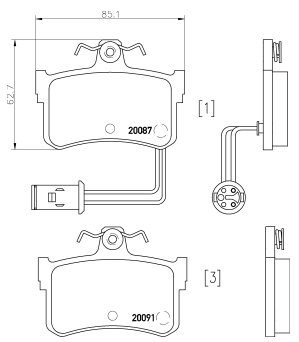

14

2012401

20124 190 1 4

VOLKSWAGEN

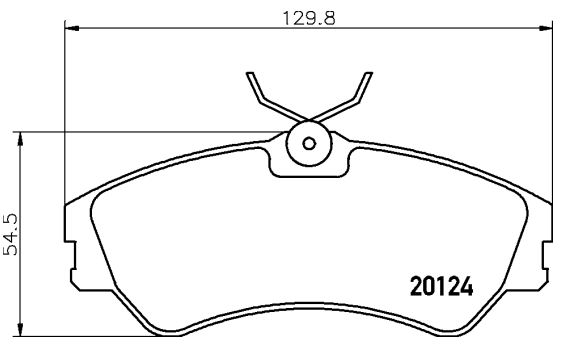

19

2014003

20140 140 0 5

DACIA

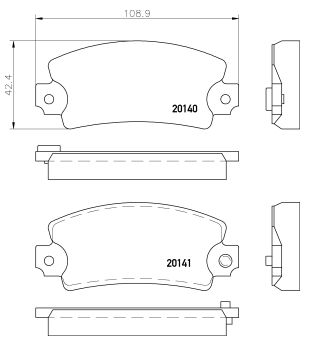

14

2016203

20162 154 0 4

CITROËN

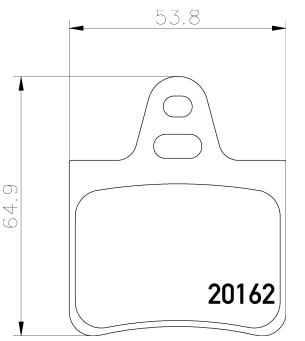

15.4

2016501

20165 156 0 5

ASTON MARTIN

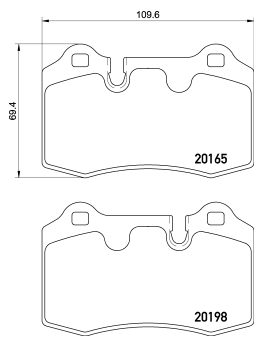

15.6

2016603

20166 160 0 4

LADA

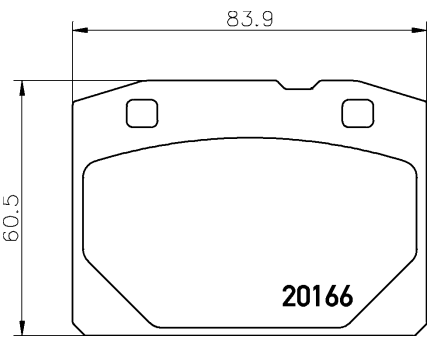

16

2016801

20168 162 1 4

AUDI (FAW), SEAT, VOLKSWAGEN

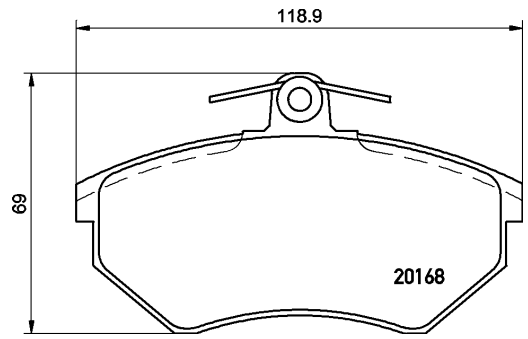

16.2

2016804

20168 196 1 4

SEAT, VOLKSWAGEN

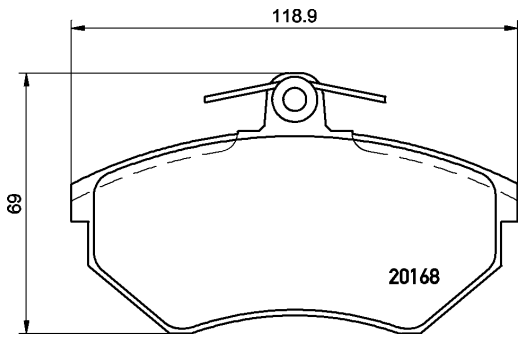

19.6

2021701

20217 173 0 4

LAND ROVER

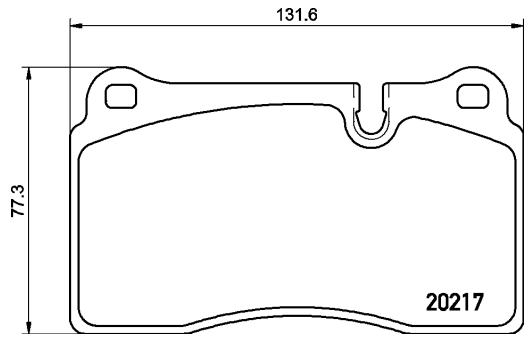

17.3

2021703

20217 166 0 5

ASTON MARTIN

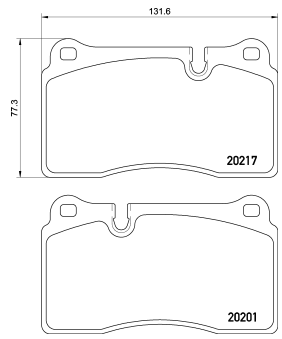

16.6

2022401

20224 209 0 5

CADILLAC, HOLDEN, OPEL, SAAB, VAUXHALL

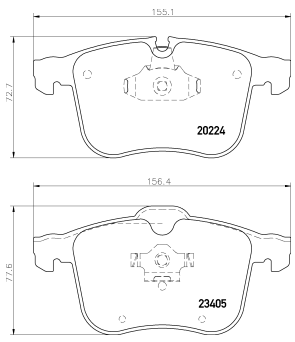

20.9

2026101

20261 193 1 5

CITROËN, FIAT, LANCIA, PEUGEOT

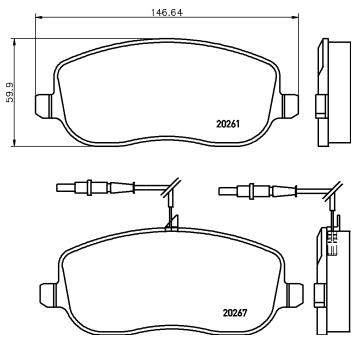

19.3

2032306

20323 145 0 4

LOTUS, OPEL, VAUXHALL

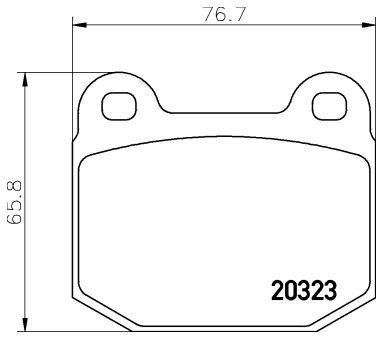

14.5

2032501

20325 175 0 5

LEXUS, TOYOTA

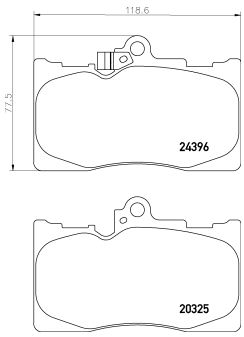

17.5

2034402

20344 150 0 4

LAND ROVER

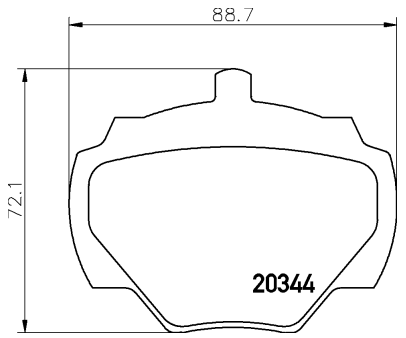

15

2034501

20345 169 0 4

RENAULT

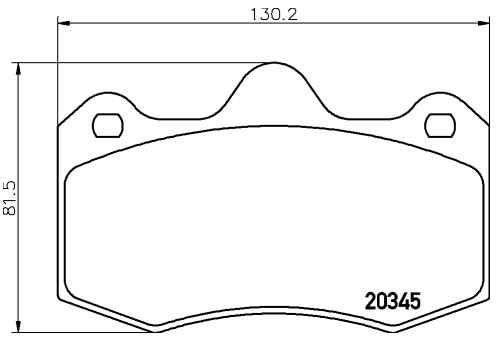

16.9

2034503

20345 157 0 4

LOTUS

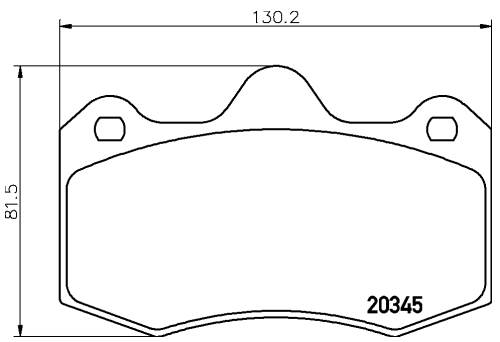

15.7

2035908

20359 180 1 4

LDV

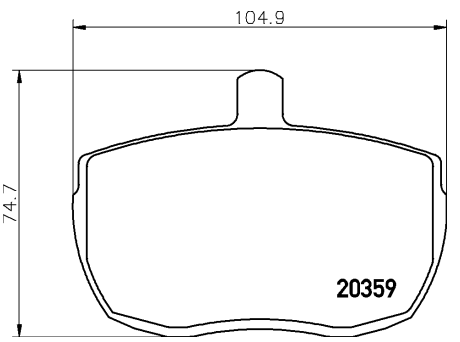

18

2038001

20380 156 0 4

ASTON MARTIN

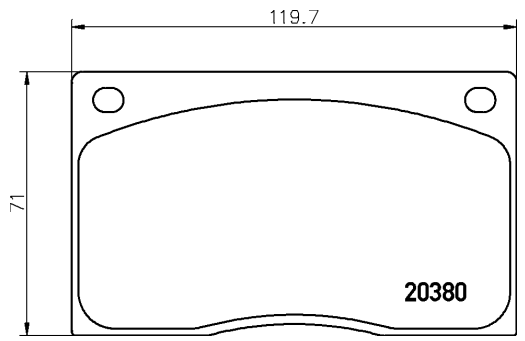

15.6

2038902

20389 160 0 4

CITROËN

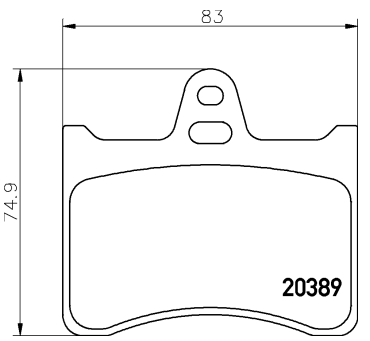

16

2041001

20410 150 0 5

LOTUS, RENAULT

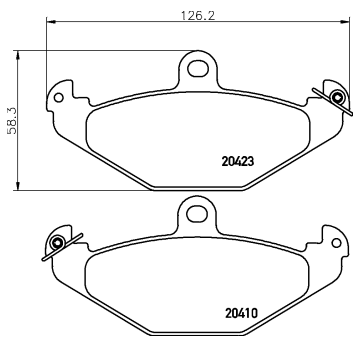

15

2041003

20410 129 0 5

LOTUS, OPEL, VAUXHALL

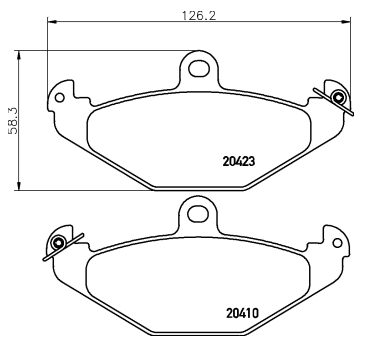

12.9

2048802

20488 185 0 5

RENAULT

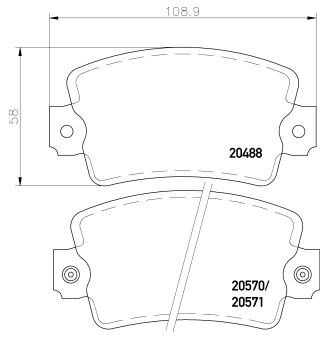

18.5

2049401

20494 140 0 5

DACIA

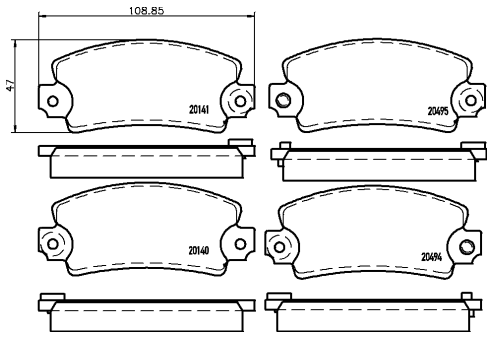

14

2054701

20547 168 0 5

CHEVROLET, DAEWOO, FSO, HOLDEN, OPEL, VAUXHALL, ZAZ

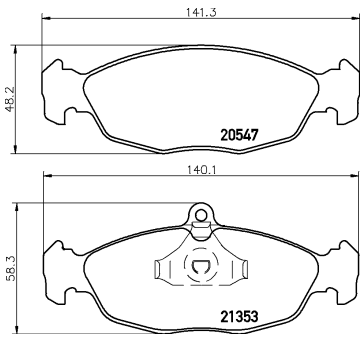

16.8

2061005

20610 090 0 4

ASTON MARTIN, AUDI, JAGUAR, MASERATI

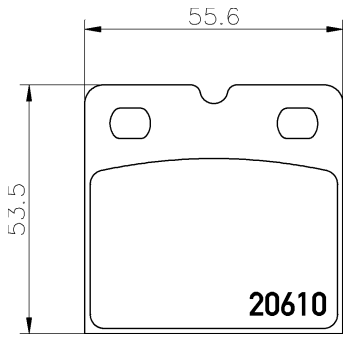

2063402

20634 150 0 4

RENAULT

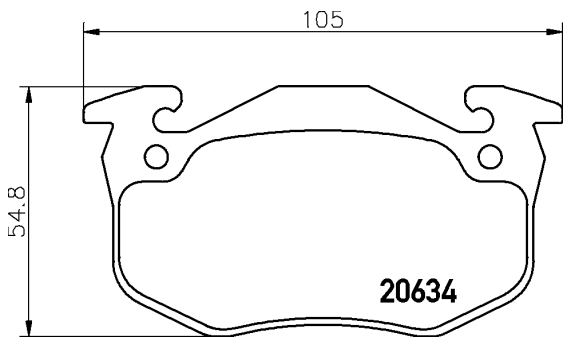

15

2066001

20660 156 0 4

LADA

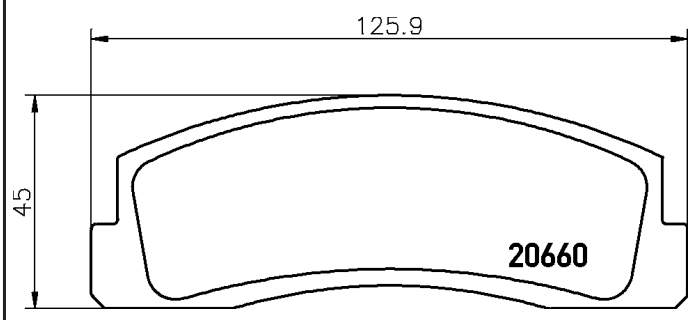

15.6

2066921

20669 196 1 4

AUDI

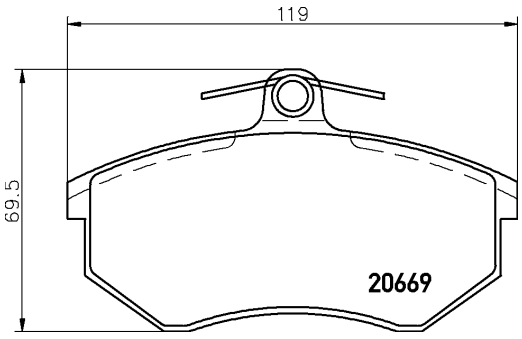

19.6

2066928

20669 180 1 4

DR

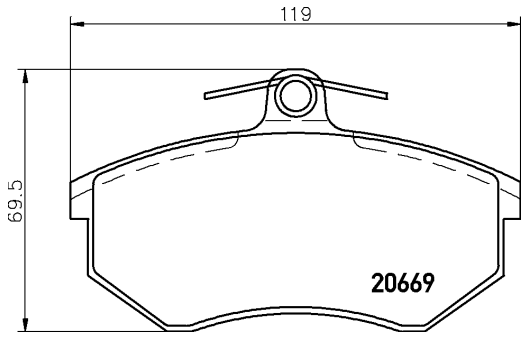

18

2068701

20687 155 0 4

MERCEDES-BENZ

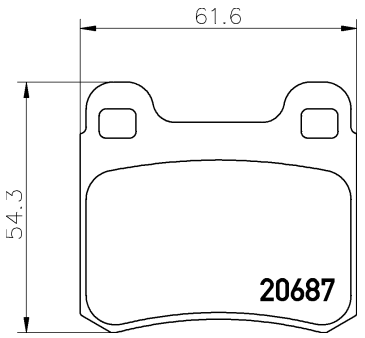

15.5

2069901

20699 152 0 4

ASIA MOTORS

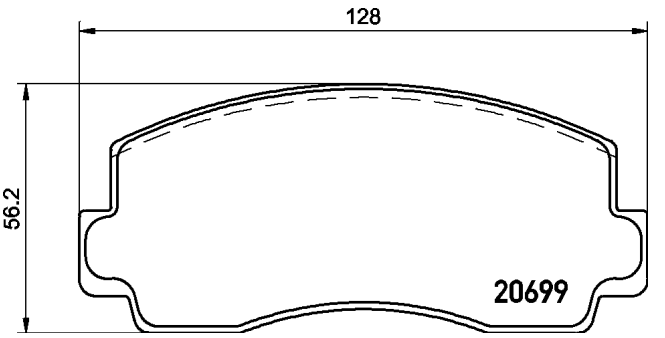

15.2

2073101

20731 152 0 4

FORD ASIA / OZEANIA, MARUTI, SUZUKI

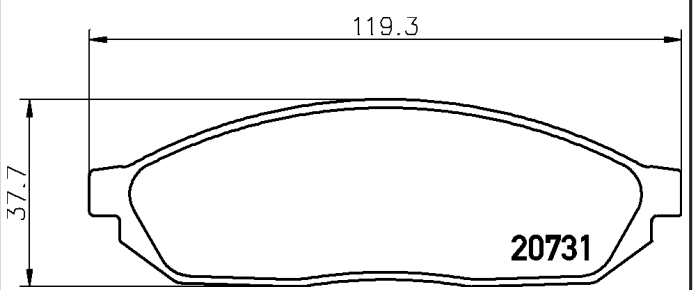

15.2

2074105

20741 150 1 4

IVECO, SANTANA

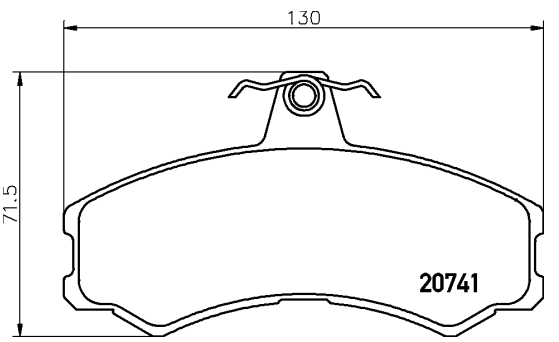

15

2075506

20755 150 1 4

VOLVO

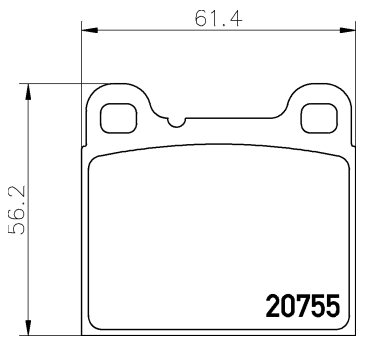

15

2078001

20780 134 0 4

ASIA MOTORS, DAIHATSU, PERODUA, PIAGGIO

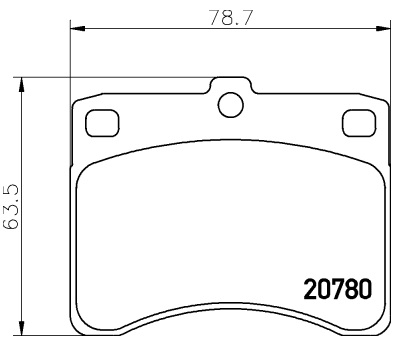

13.4

2078401

20784 180 0 4

MERCEDES-BENZ, PUCH

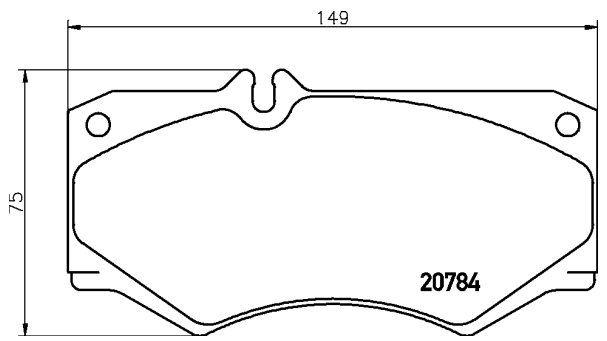

18

2083302

20833 171 2 5

ALFA ROMEO, FIAT, LANCIA

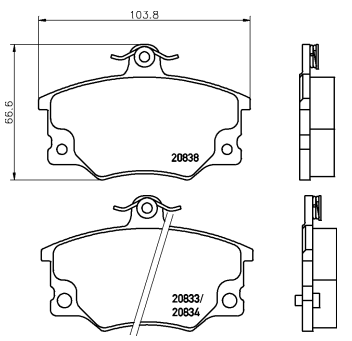

17.1

2085201

20852 155 0 4

TOYOTA

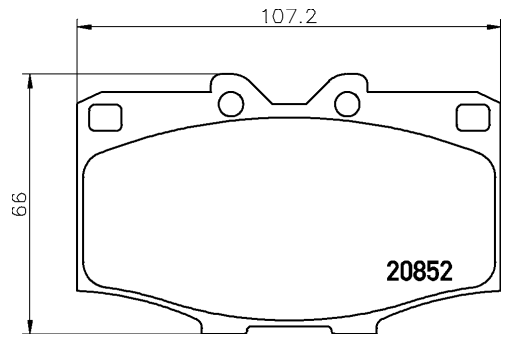

15.5

2087001

20870 150 0 4

TOYOTA

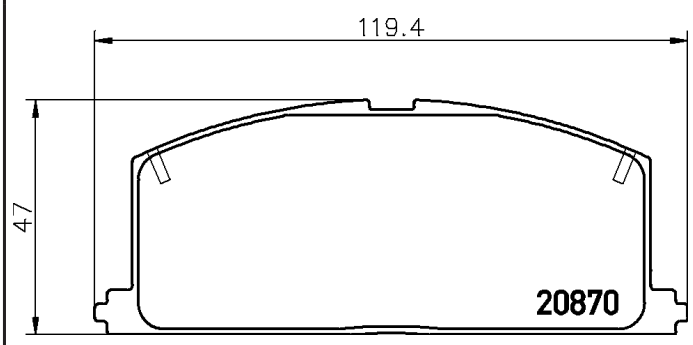

15

2087702

20877 175 0 4 T428

FORD

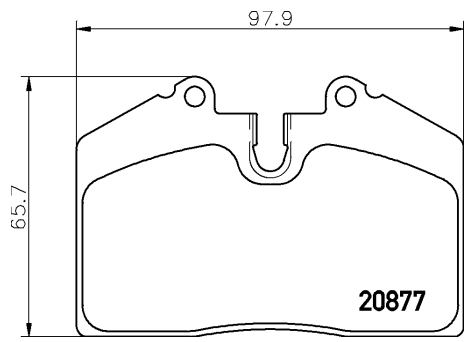

17.5

2088707

20887 153 2 5

SEAT, VOLKSWAGEN

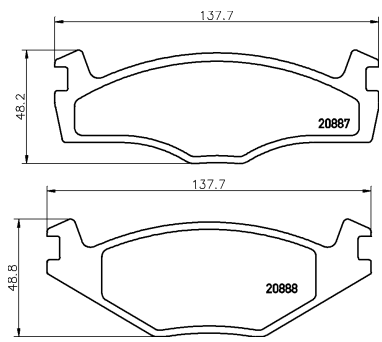

15.3

2088708

20887 173 2 5

SEAT, VOLKSWAGEN

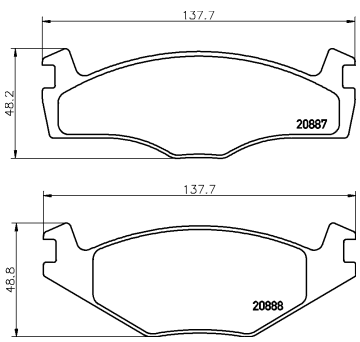

17.3

2088710

20887 197 2 5

SEAT, VOLKSWAGEN

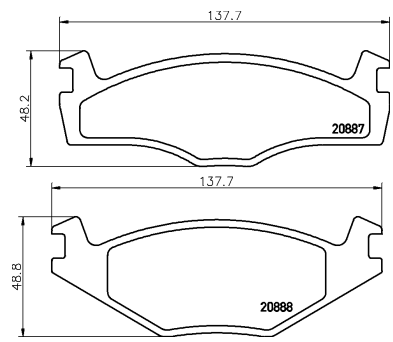

19.7

2088902

20889 173 2 4

SEAT

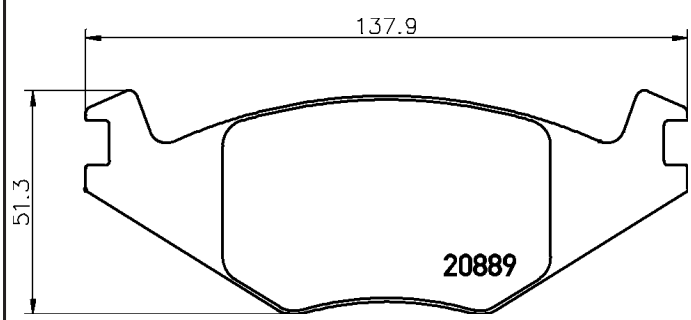

17.3

2090401

20904 180 0 4

LDV

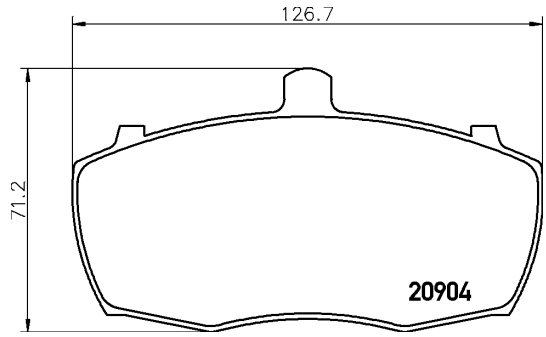

18

2090506

20905 180 0 5

CITROËN, DALLAS, PEUGEOT, RENAULT, WULING

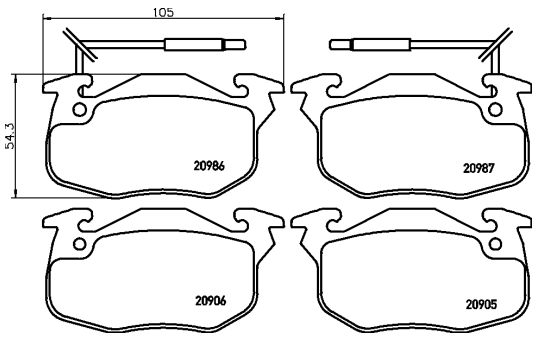

18

2090602

20906 180 0 5

CITROËN, PEUGEOT

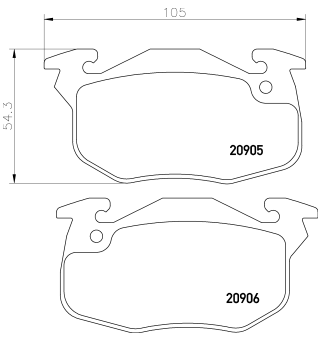

18

2090603

20906 180 2 5

CITROËN, MEGA, PEUGEOT

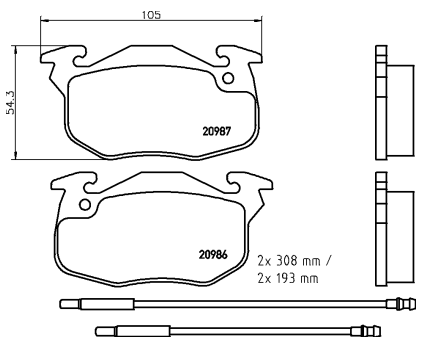

18

2090604

20906 180 4 5

PEUGEOT

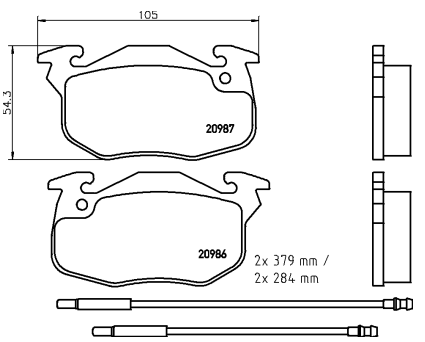

18

2090702

20907 180 0 5

FORD

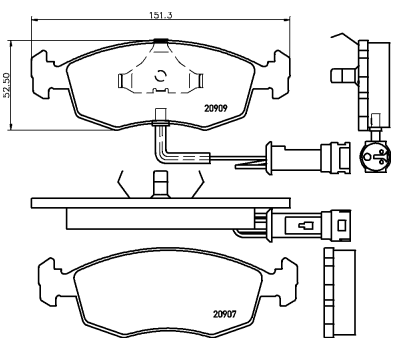

18

2090802

20908 180 0 5

FORD

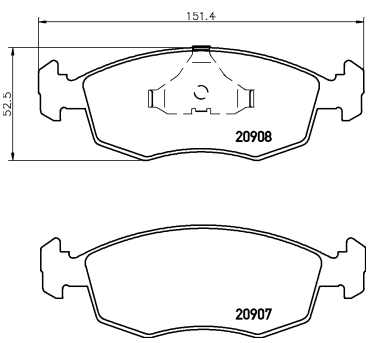

18

2092602

20926 185 0 5

OPEL, RENAULT, VAUXHALL

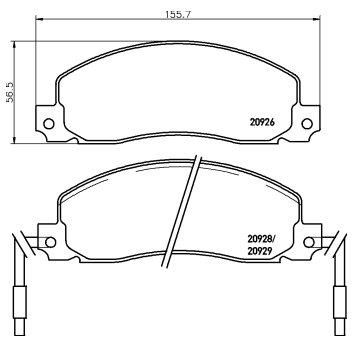

18.5

2095005

20950 180 0 4

FIAT

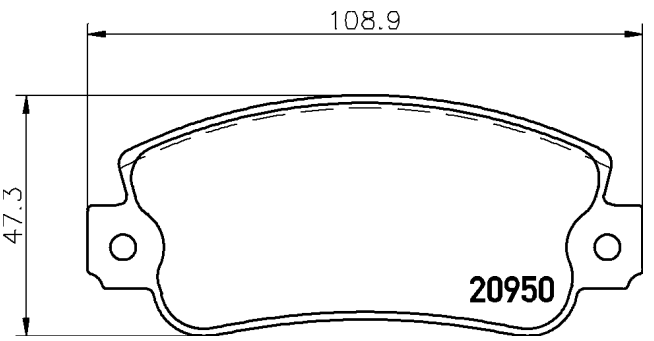

18

2095006

20950 180 0 5

FIAT

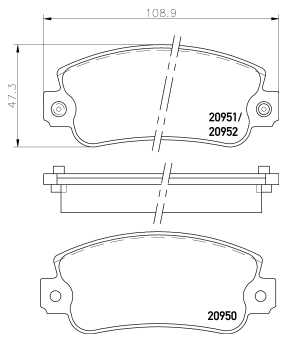

18

2095802

20958 160 0 4

SUBARU

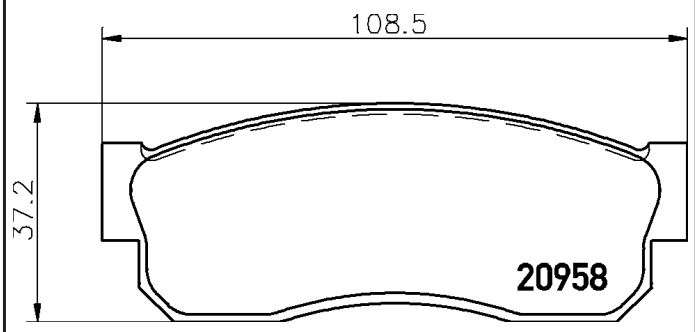

16

2096110

20961 174 1 4

CITROËN, FIAT, LANCIA, PEUGEOT

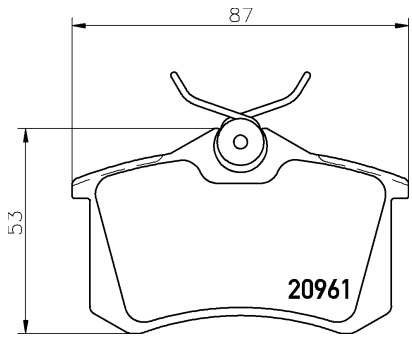

17.4

2096801

20968 203 0 5

BMW

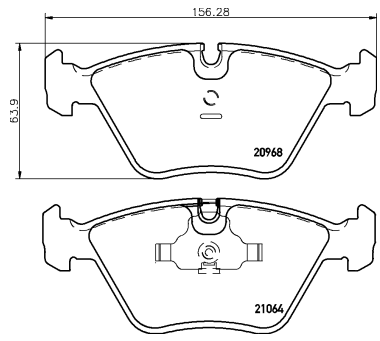

20.3

2097401

20974 110 0 4

CITROËN, CITROËN (DF-PSA), PEUGEOT, PEUGEOT (DF-PSA), RENAULT

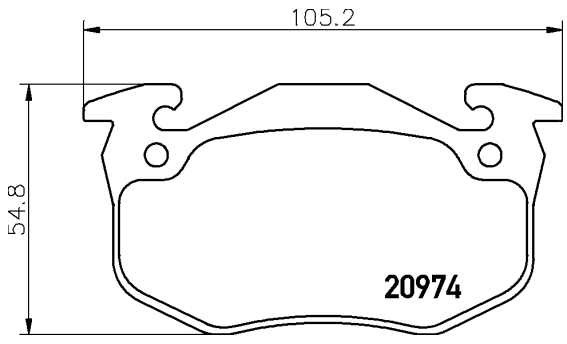

11

2098101

20981 137 1 4

AC, MARCOS, TVR

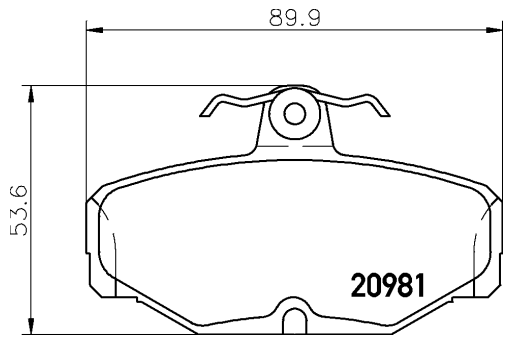

13.7

2098901

20989 177 0 5

CITROËN, DALLAS, WULING

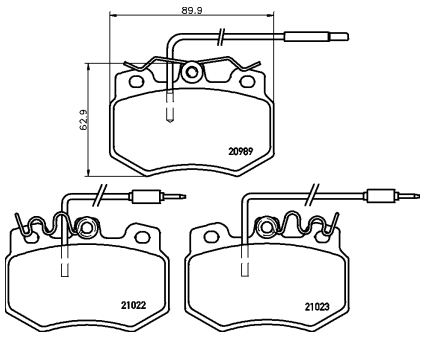

17.7

2099501

20995 173 0 5

BMW, WIESMANN

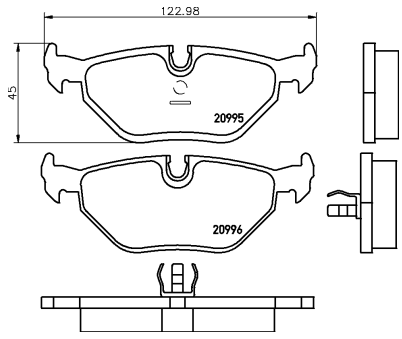

17.3

2101202

21012 148 0 5

DODGE, HYUNDAI, INOKOM

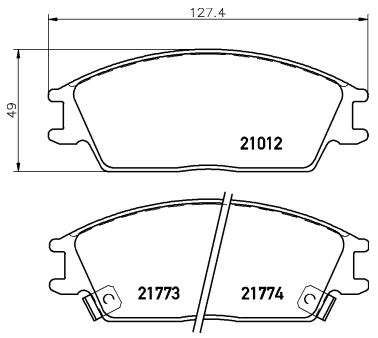

14.8

2101204

21012 148 0 4

HYUNDAI

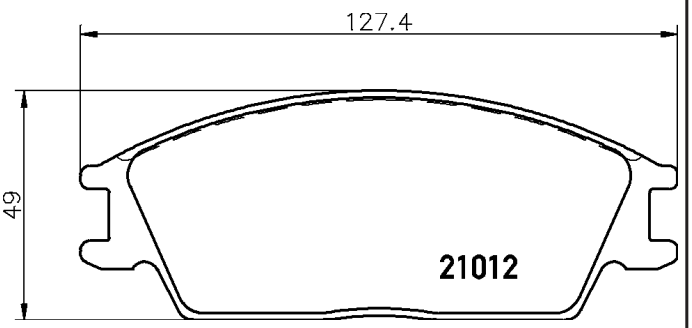

14.8

2105002

21050 152 0 4

HOLDEN, OPEL, SAAB, VAUXHALL

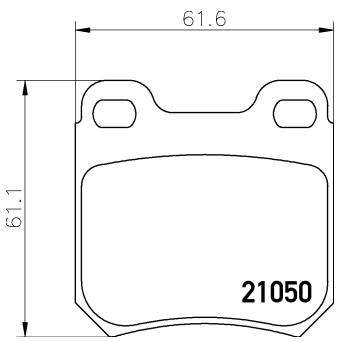

15.2

2109601

21096 150 0 5

RENAULT

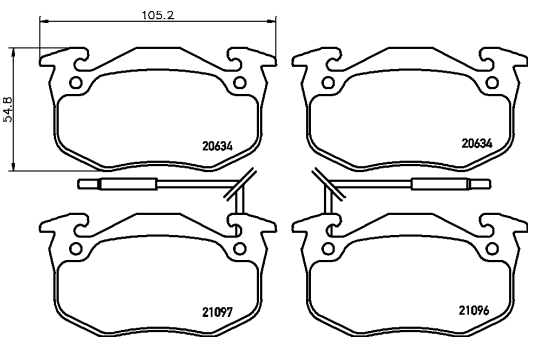

15

2109901

21099 170 0 4

NISSAN

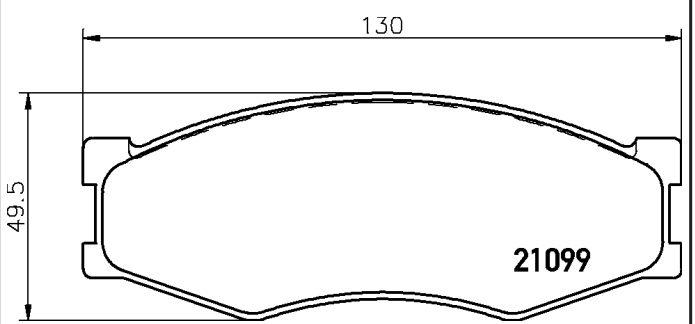

17

2109902

21099 170 0 5

NISSAN

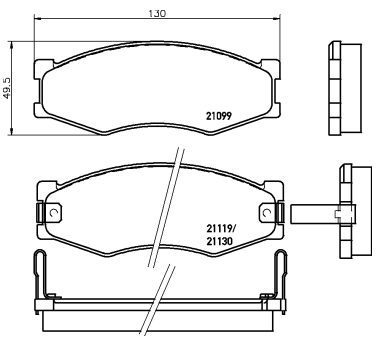

17

2110005

21100 170 2 5

LANCIA, ZASTAVA

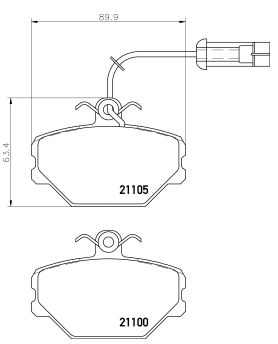

17

2110701

21107 120 0 4

LANCIA

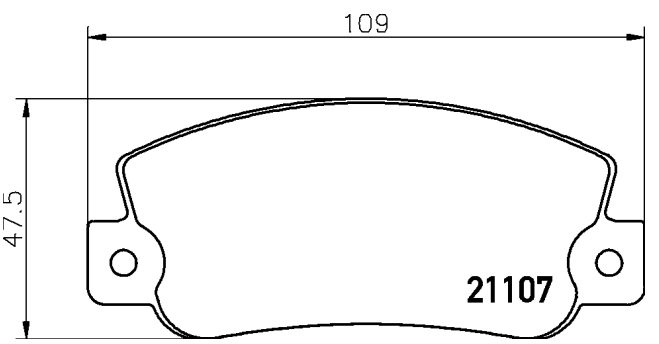

12

2111501

21115 155 0 4

ISUZU

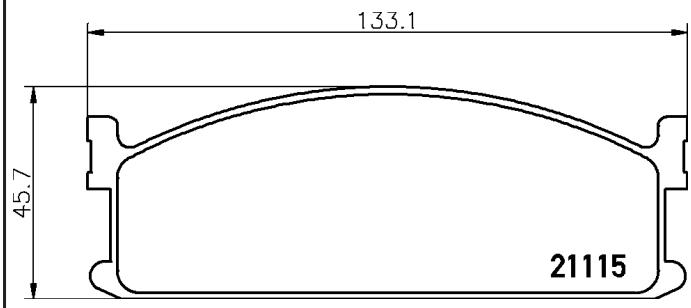

15.5

2112102

21121 140 0 5

NISSAN

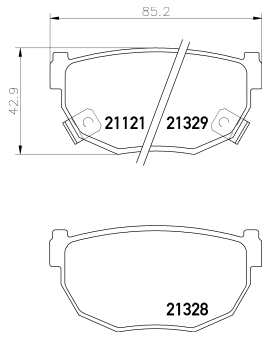

14

2113802

21138 195 1 5

AUDI

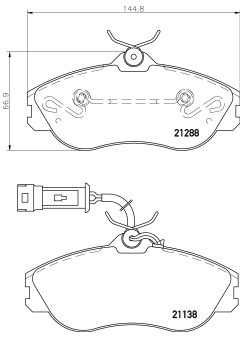

19.5

2114001

21140 157 0 4

OPEL, VAUXHALL

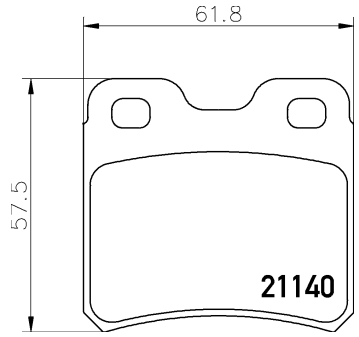

15.7

2114202

21142 155 0 4

FORD ASIA / OZEANIA, SUZUKI

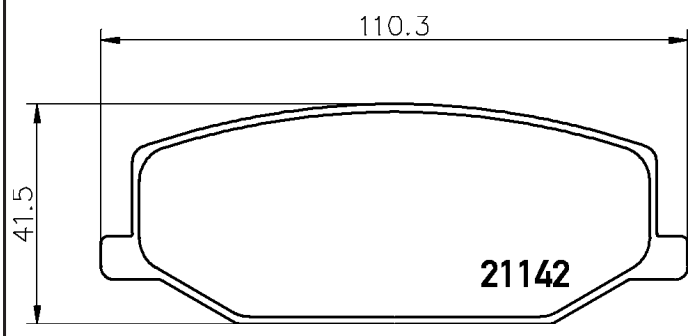

15.5

2114401

21144 166 1 4

AUDI

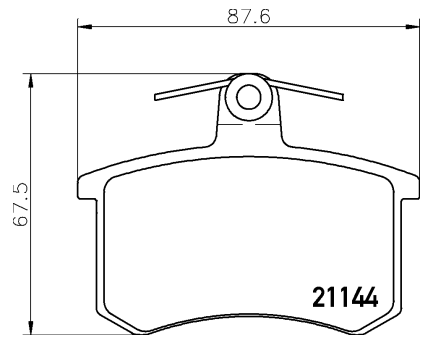

16.6

2115307

21153 175 0 4

MERCEDES-BENZ

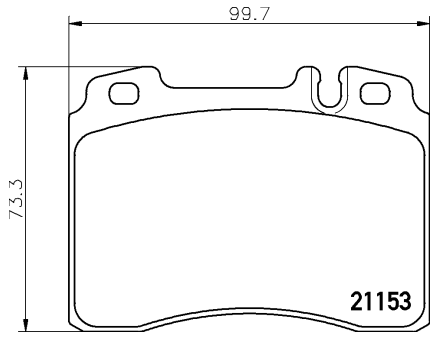

17.5

2115801

21158 156 0 4

TOYOTA

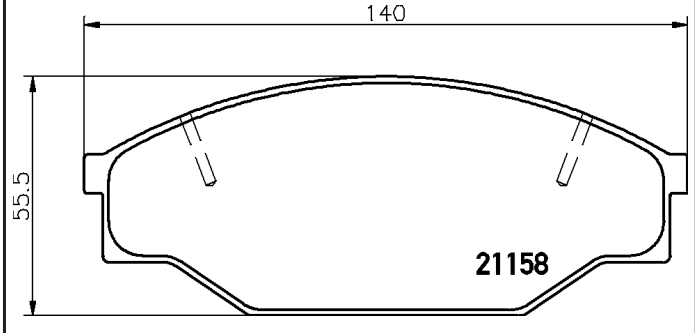

15.6

Illustrations

2116002

21160 180 0 5

CARBODIES, LTI

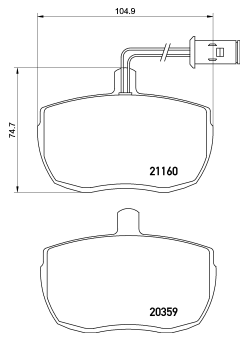

18

2117002

21170 170 1 4

LADA, ZAZ

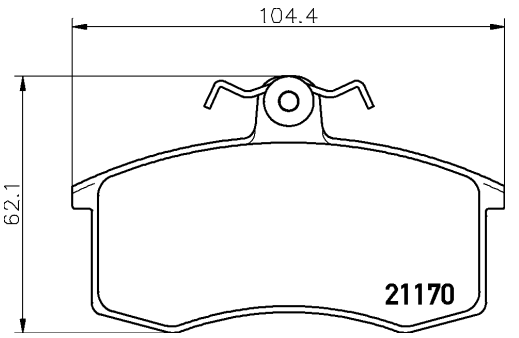

17

2117004

21170 170 1 4

NISSAN

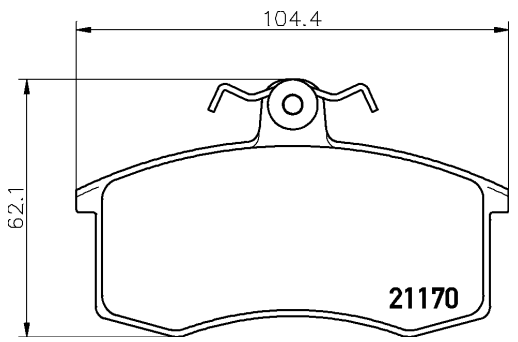

14.5

2117105

21171 180 0 4

FORD

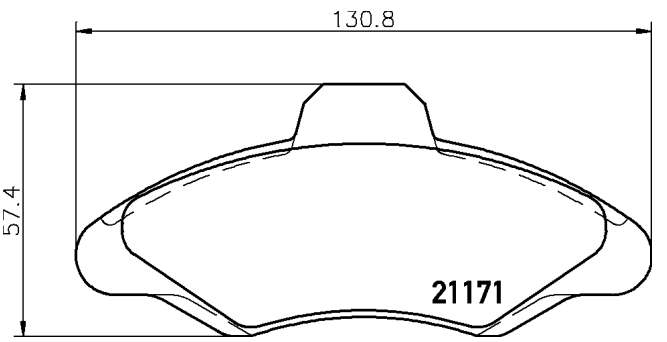

18

2119301

21193 180 0 5

FIAT, VOLKSWAGEN

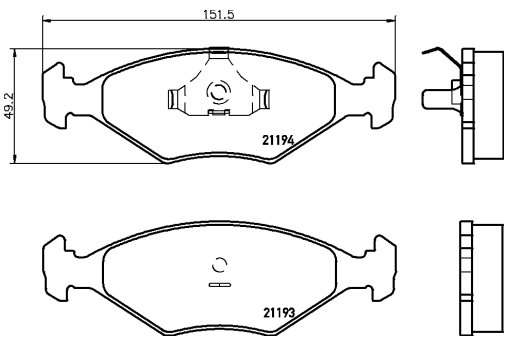

18

2119501

21195 180 0 5

FIAT

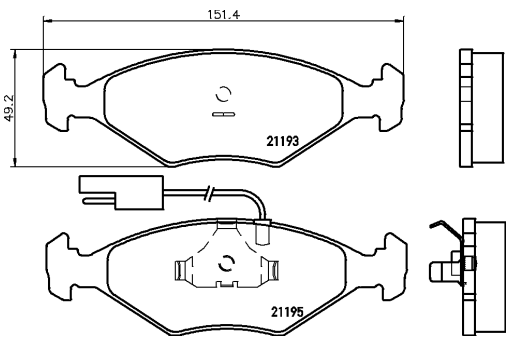

18

2119701

21197 150 0 4

MERCEDES-BENZ

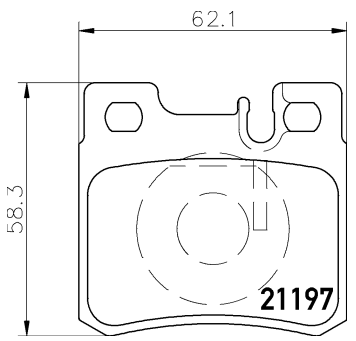

15

2120203

21202 178 0 5

FORD

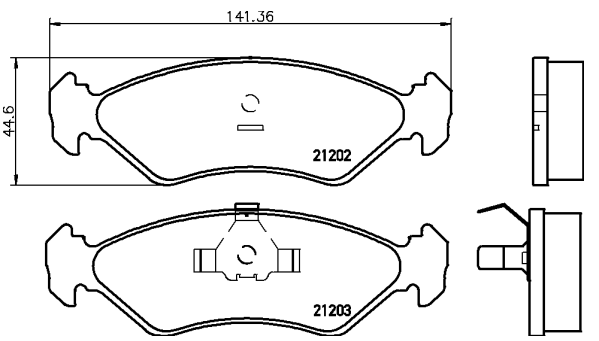

17.8

2120909

21209 194 1 5

PEUGEOT

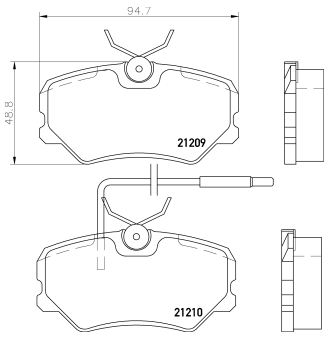

19.4

2121102

21211 187 0 5

CITROËN, PEUGEOT

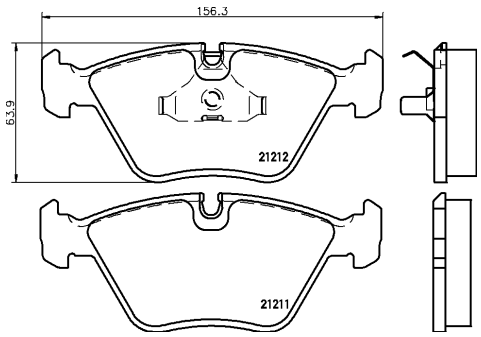

18.7

2124501

21245 174 0 5

ROVER, TATA (TELCO)

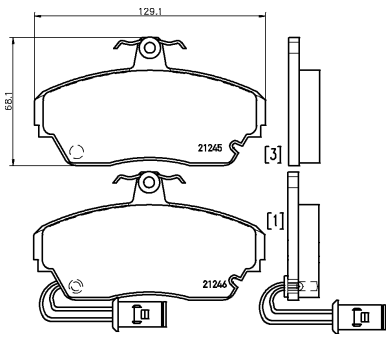

17.4

2124502

21245 174 0 4

TATA (TELCO)

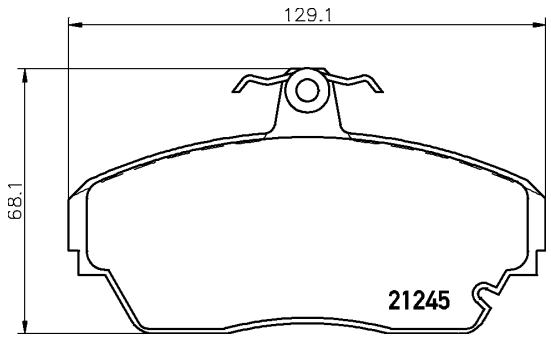

17.4

2126702

21267 176 0 5

CITROËN, PEUGEOT

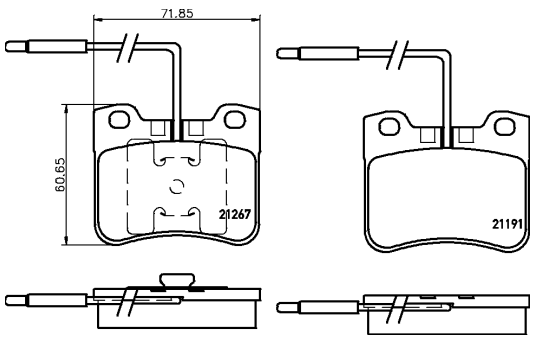

17.6

2127304

21273 195 0 5

VOLVO

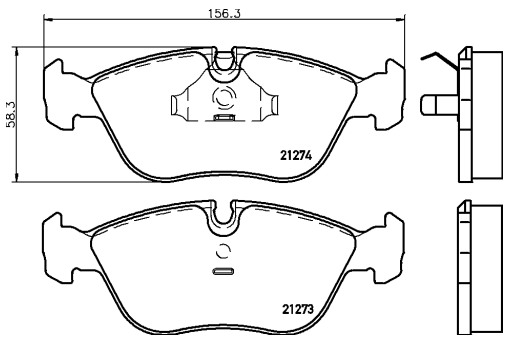

19.5

2127501

21275 169 1 5 T4067

ASTON MARTIN, CITROËN, FIAT, LANCIA, PEUGEOT

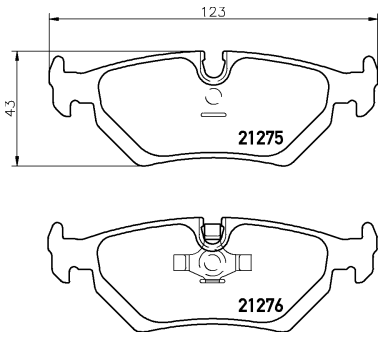

16.9

2127504

21275 169 0 5 T4047

JAGUAR

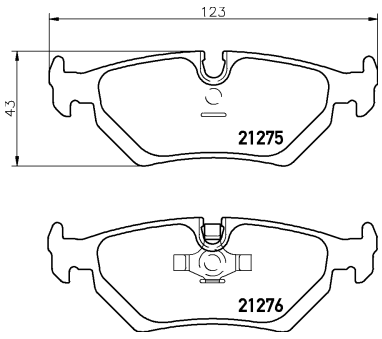

16.9

2127801

21278 170 0 5

PEUGEOT

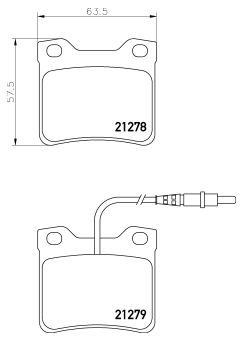

17

2127803

21278 170 1 5

PEUGEOT

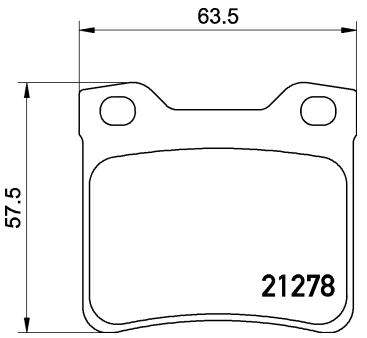

17

2128201

21282 173 0 5

BMW, MASERATI, WIESMANN

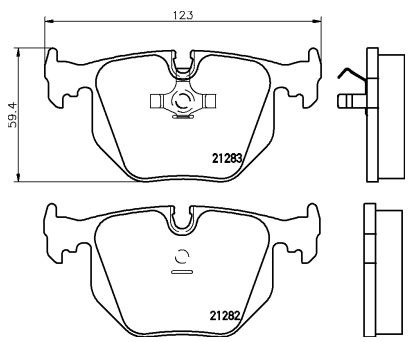

17.3

2129802

21298 170 1 4

PEUGEOT

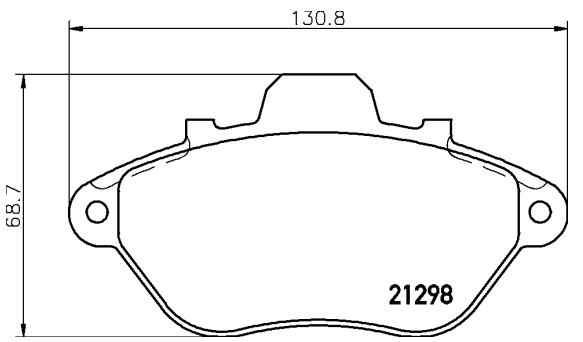

17

2130103

21301 155 0 4

MERCEDES-BENZ

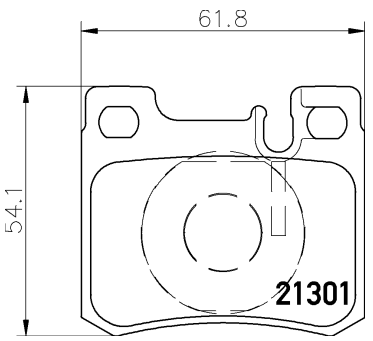

15.5

2130304

21303 188 0 4

MERCEDES-BENZ

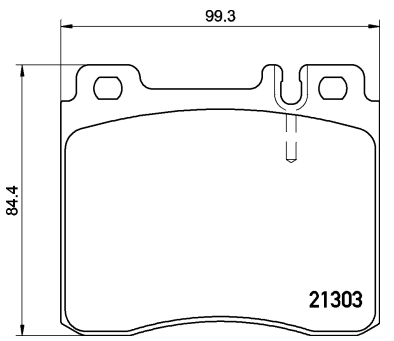

18.8

2130501

21305 155 0 4 T4023

MERCEDES-BENZ

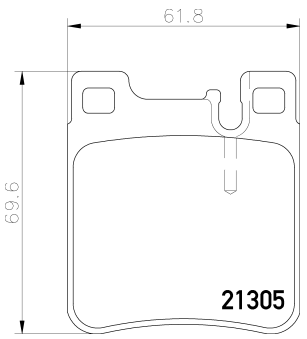

15.5

2130503

21305 160 0 4 T4210

MERCEDES-BENZ

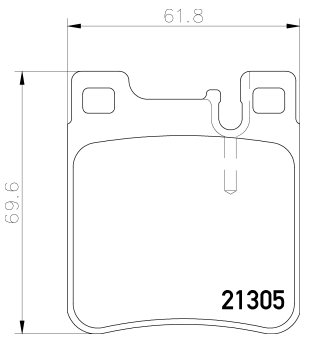

16

2130504

21305 155 0 4 T4250

CHRYSLER, MERCEDES-BENZ

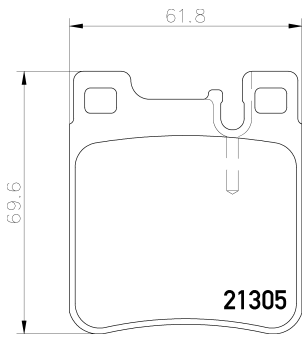

15.5

2130581

21305 155 0 4 epad

CHRYSLER, MERCEDES-BENZ

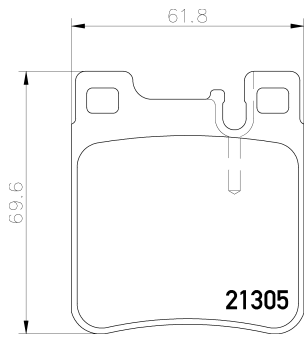

15.5

2130701

21307 145 0 5

NISSAN, SUBARU

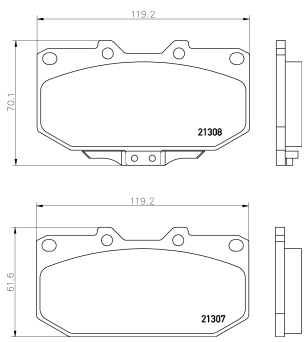

14.5

2131201

21312 130 0 5

HONDA, MG, ROVER

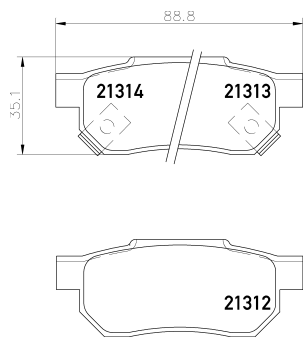

13

2131501

21315 152 0 5

MAZDA

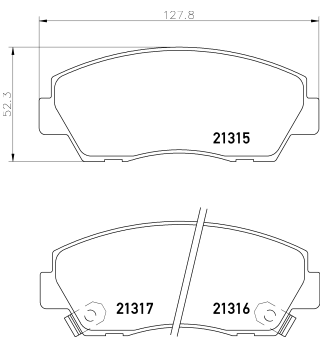

15.2

2131901

21319 130 0 5

EUNOS, MAZDA

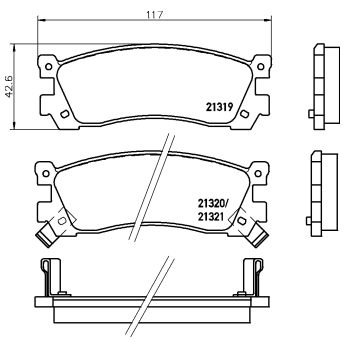

13

2132201

21322 150 0 5

HONDA

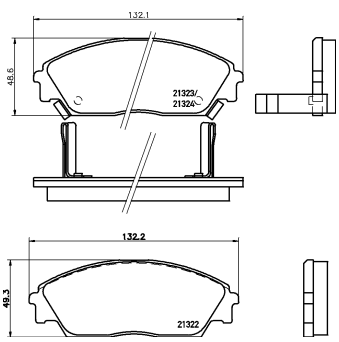

15

2133301

21333 150 0 5

SUBARU, SUZUKI, TATA (TELCO)

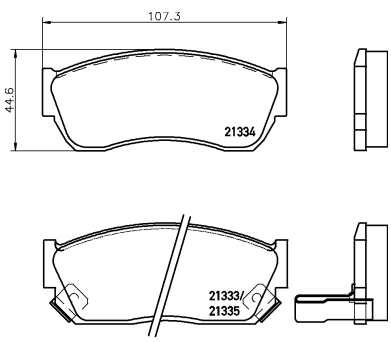

15

2134401

21344 160 0 5

SUZUKI

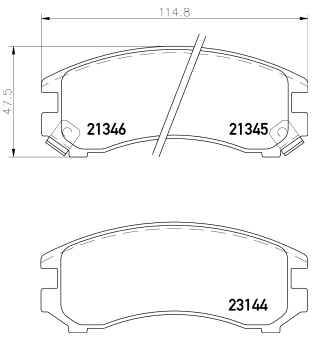

16

2134702

21347 170 0 5

NISSAN

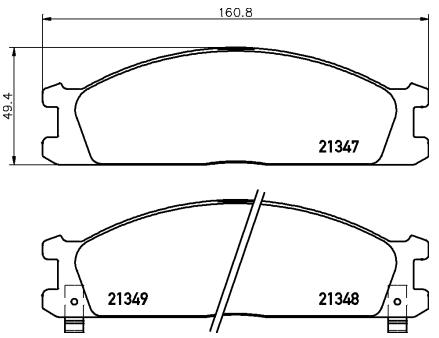

17

2135501

21355 145 0 5

FORD ASIA / OZEANIA, KIA

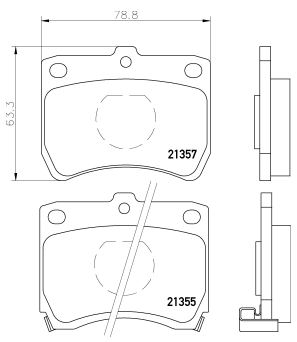

14.5

2135803

21358 198 0 5

AC, FORD, FORD USA, MERCURY

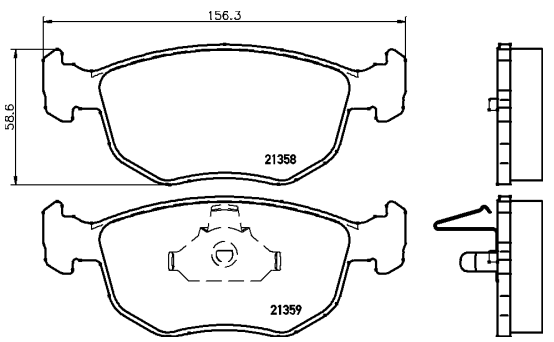

19.8

2136301

21363 157 0 5

CHANGFENG, CITROËN, MITSUBISHI, MITSUBISHI (BBDC), PEUGEOT

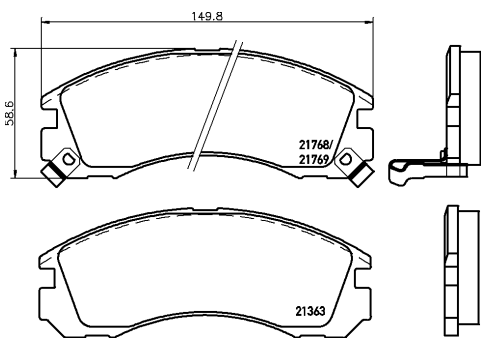

15.7

2136502

21365 170 0 4

FIAT

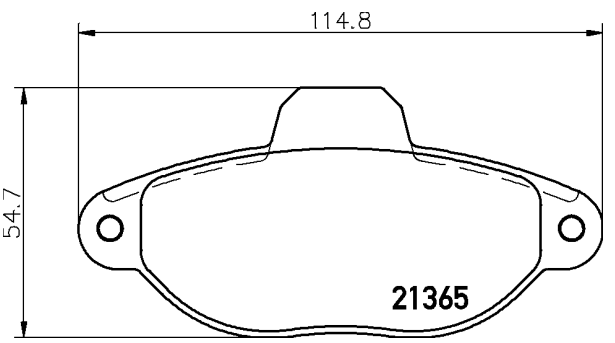

17

2136801

21368 183 1 5

OPEL, VAUXHALL

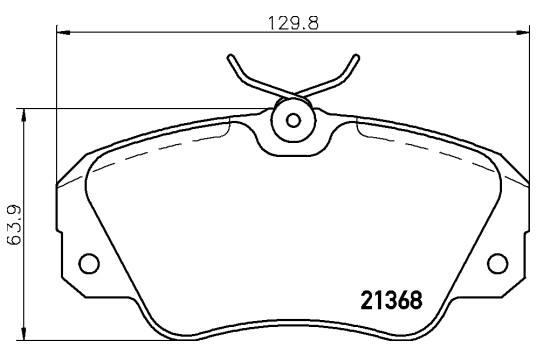

18.3

2137001

21370 157 1 4

CHANGFENG, CITROËN, MITSUBISHI, PEUGEOT

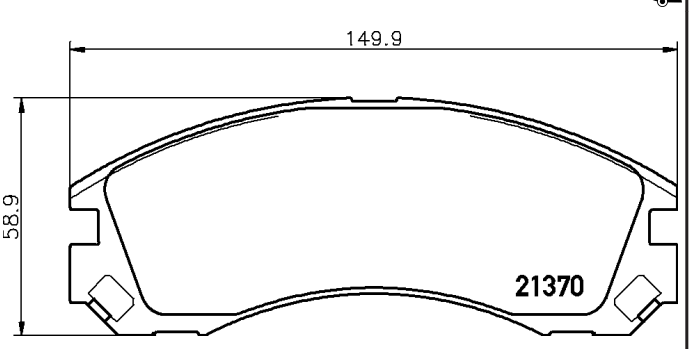

15.7

2137301

21373 165 0 5

MITSUBISHI

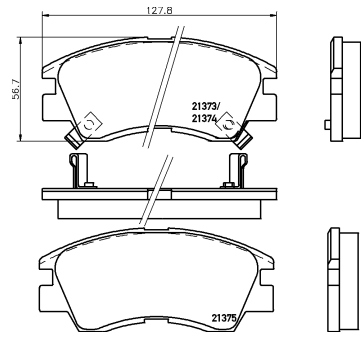

16.5

2138102

21381 150 0 4

DAIMLER, JAGUAR, SEAT, VOLVO

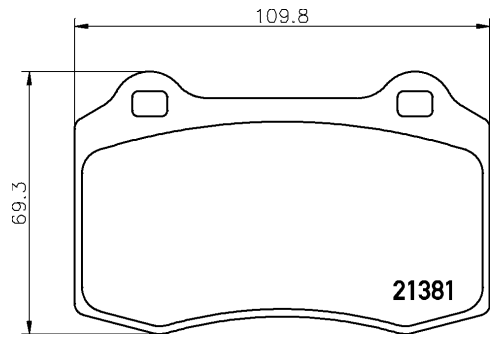

15

2138103

21381 180 0 5

ALFA ROMEO, DODGE, FIAT

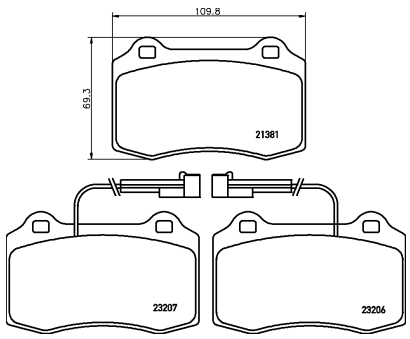

18

2138104

21381 140 0 4

CITROËN

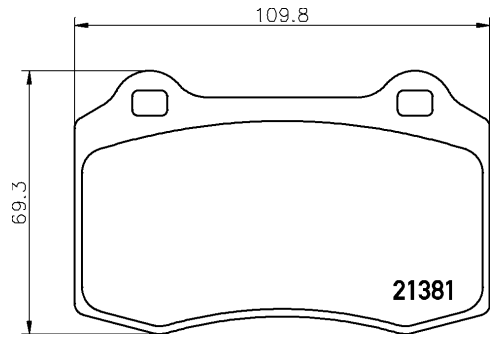

14

2138501

21385 139 1 4

VOLVO

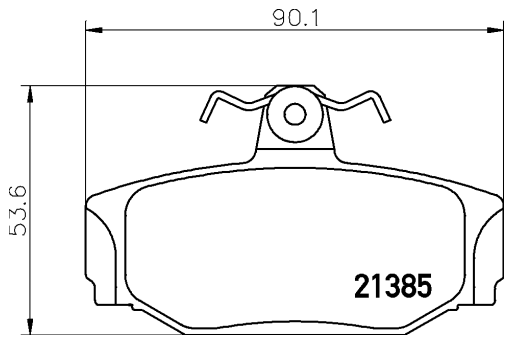

13.9

2138603

21386 150 0 4

NISSAN

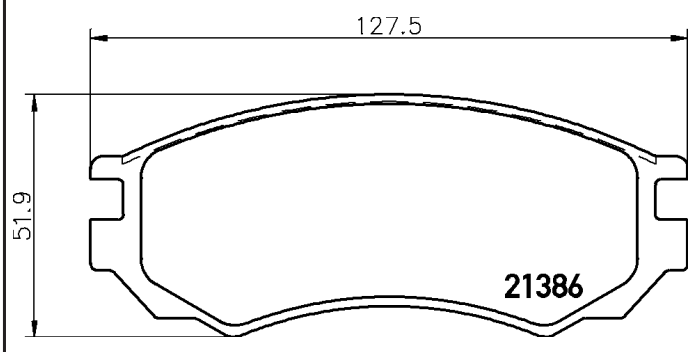

15

2138604

21386 150 0 5

NISSAN

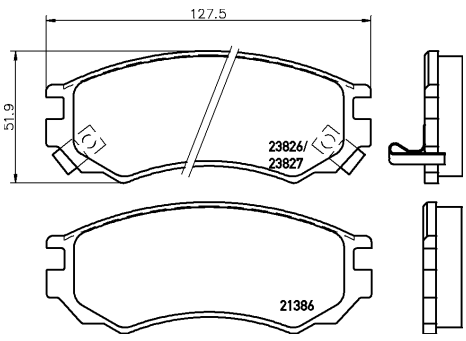

15

2138802

21388 183 2 5

DAEWOO, RENAULT

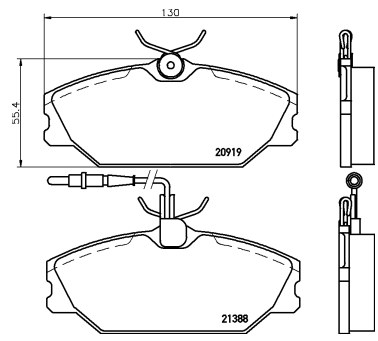

18.3

2139408

21394 185 0 5

FORD, FORD AUSTRALIA, FORD USA, MERCURY

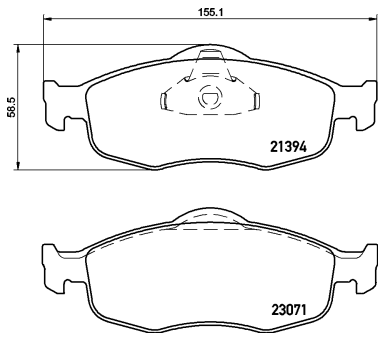

18.5

2141101

21411 175 0 5

OPEL, VAUXHALL

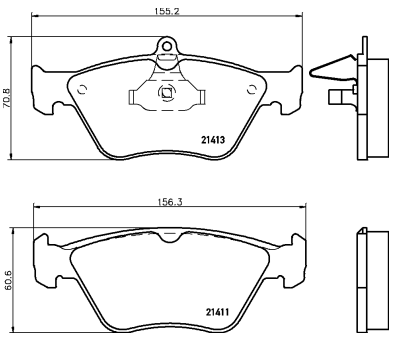

17.5

2143001

21430 173 0 5

CITROËN, PEUGEOT

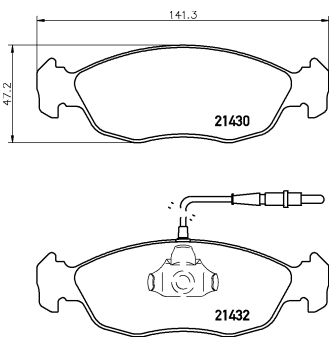

17.3

2143602

21436 170 0 4

FIAT, LANCIA, ZASTAVA

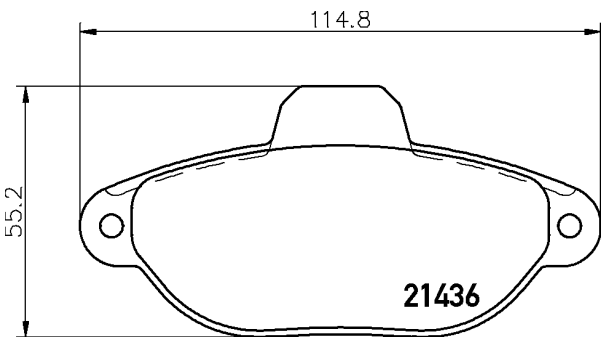

17

2143603

21436 170 1 4

FIAT, FORD, LANCIA, ZASTAVA

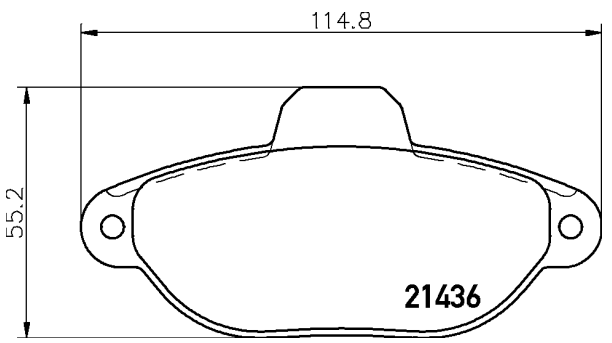

17

2143609

21436 170 4 4

FORD

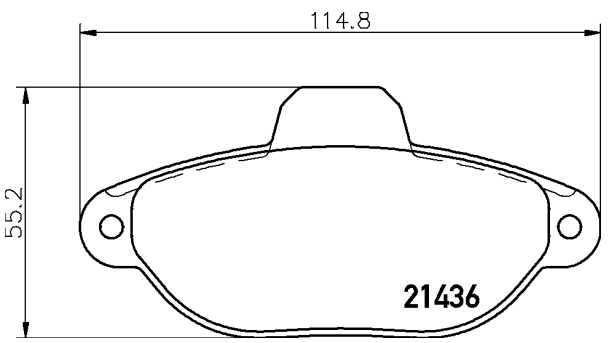

17

2143905

21439 203 2 4

MERCEDES-BENZ

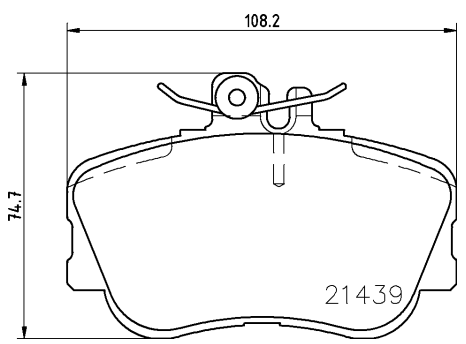

20.3

2144601

21446 175 0 5

ROVER

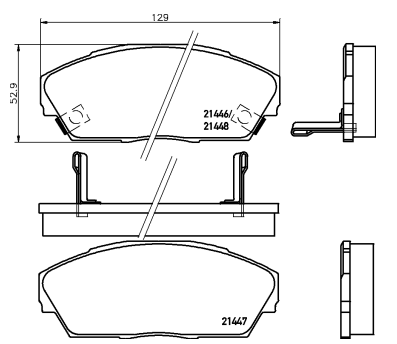

17.5

2145201

21452 185 1 5

AUDI

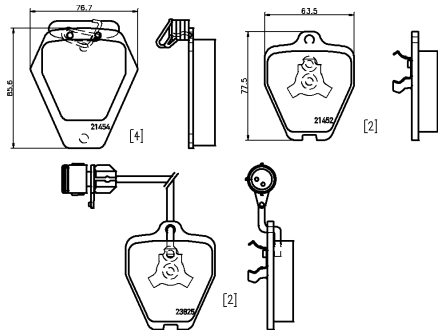

18.5

2145401

21454 185 1 5

AUDI

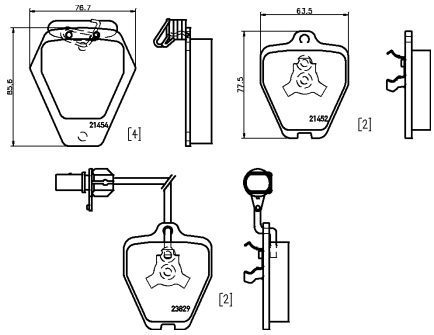

18.5

2145901

21459 185 0 4

LAND ROVER, METROCAB

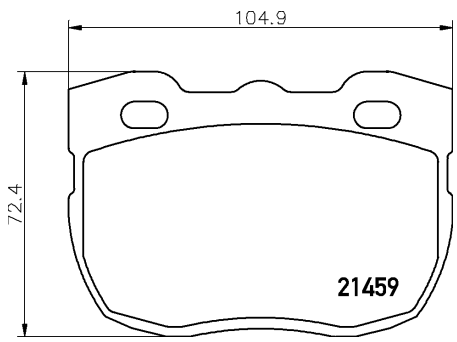

18.5

2145902

21459 185 0 5

CARBODIES

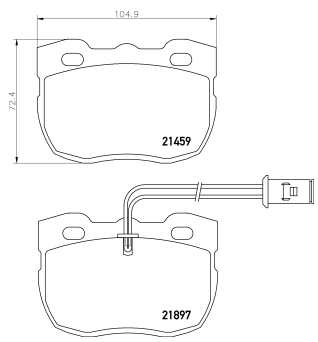

18.5

2146304

21463 182 3 4

DACIA, LADA, NISSAN, RENAULT

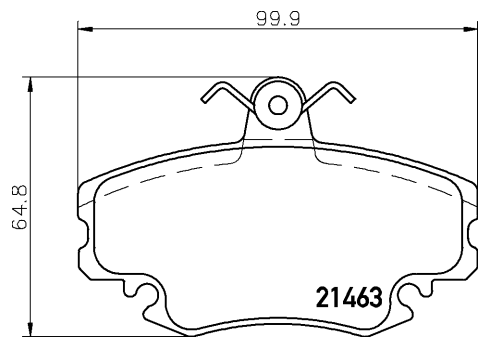

18.2

2146306

21463 182 1 4

DACIA, NISSAN, RENAULT

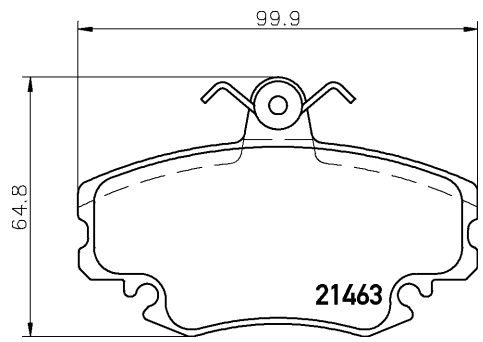

18.2

2146801

21468 155 0 4

TOYOTA

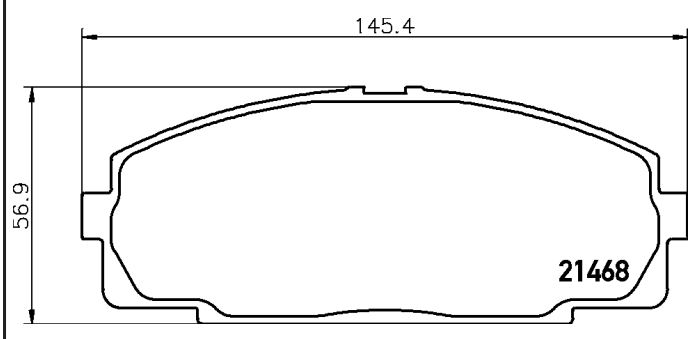

15.5

2146901

21469 190 0 4

FORD, FORD AUSTRALIA

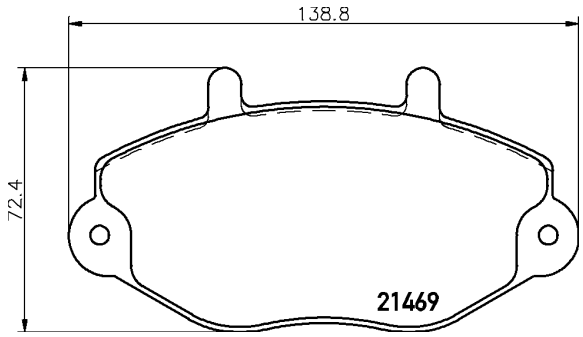

19

2146902

21469 190 1 4

FORD, FORD AUSTRALIA

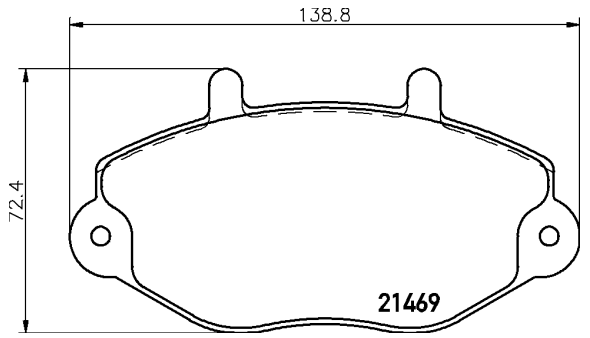

19

2147001

21470 190 0 4

FORD, FORD AUSTRALIA

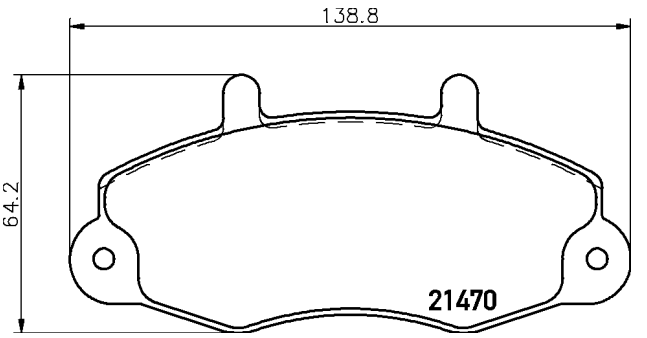

19

2147002

21470 190 1 4

FORD, FORD AUSTRALIA

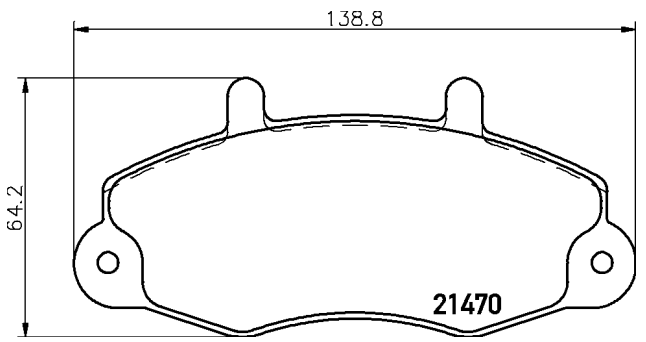

19

2147102

21471 180 0 4

BMW

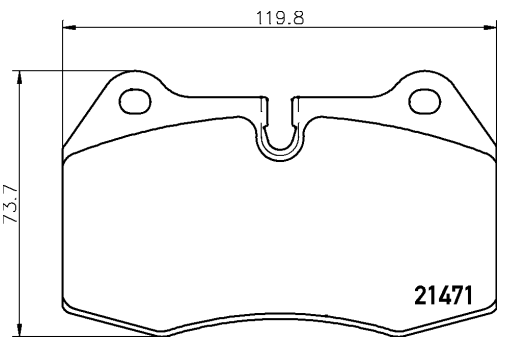

18

2147902

21479 192 1 4

VOLKSWAGEN

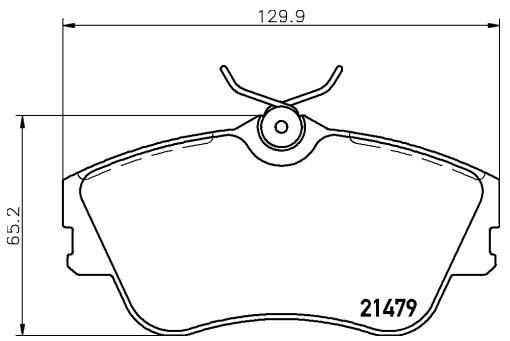

19.2

2147903

21479 192 1 5

HONDA, VOLKSWAGEN

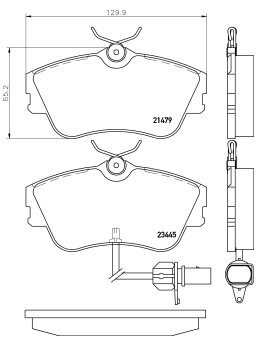

19.2

2148101

21481 157 1 4

LDV, NISSAN

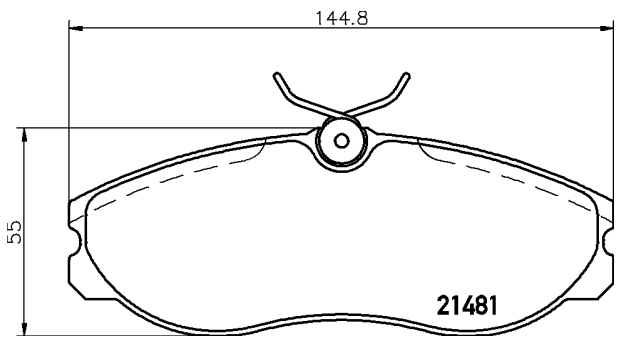

15.7

2148201

21482 170 0 5

SUBARU

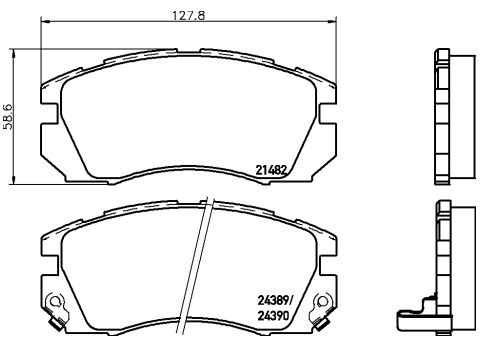

17

2148401

21484 208 0 5

ALPINA, AUDI, BENTLEY, BMW, CHRYSLER, MERCEDES-BENZ, ROLLS-ROYCE, VOLKSWAGEN

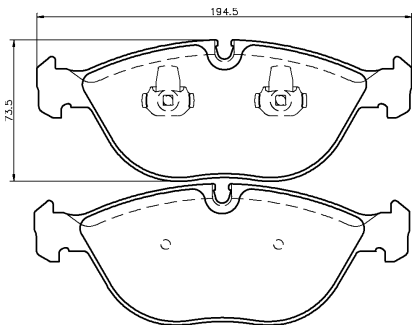

20.8

2148602

21486 193 0 5

ALPINA, BMW

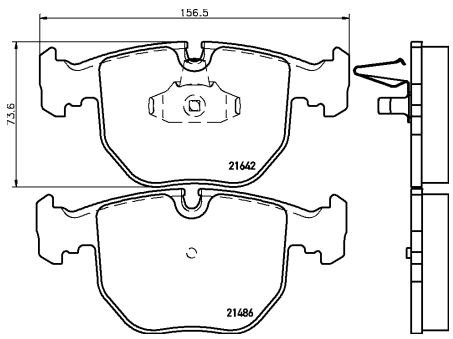

19.3

2148604

21486 193 0 5

BMW

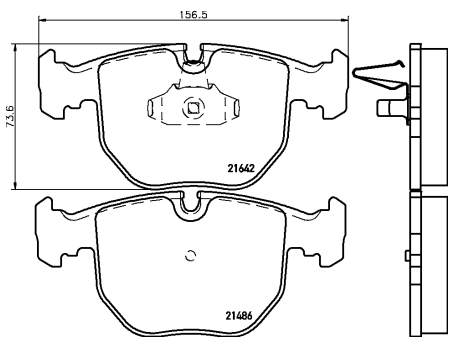

19.3

2148681

21486 193 0 5 epad

ALPINA, BMW

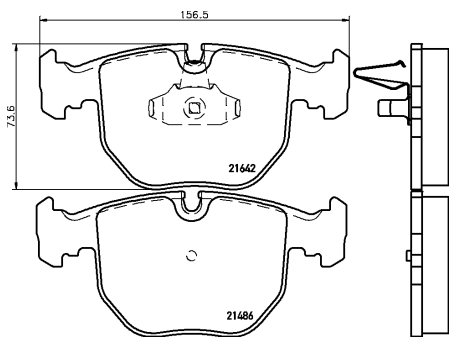

19.3

2148701

21487 172 0 5 T4183

ALPINA, BMW, LAND ROVER

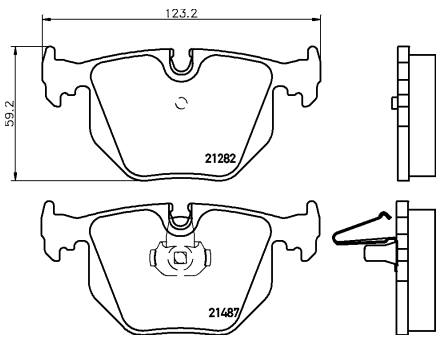

17.2

2148703

21487 172 0 5 T4126

BMW, LAND ROVER

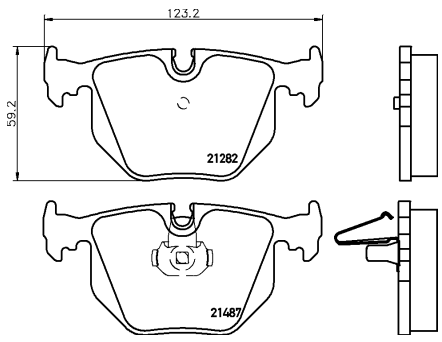

17.2

2148781

21487 172 0 4 epad

ALPINA, BMW, LAND ROVER

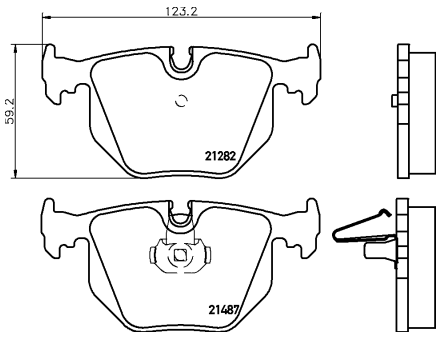

17.2

2149001

21490 171 0 5

LEXUS, TOYOTA

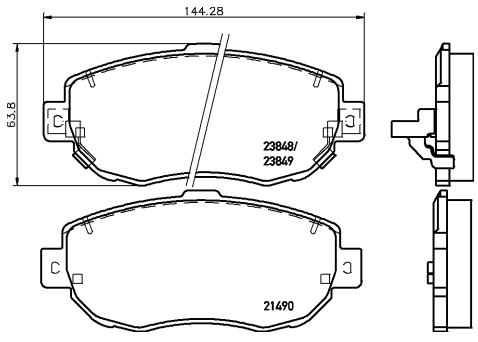

17.1

Illustrations

2149101

21491 155 0 5

LEXUS, TOYOTA

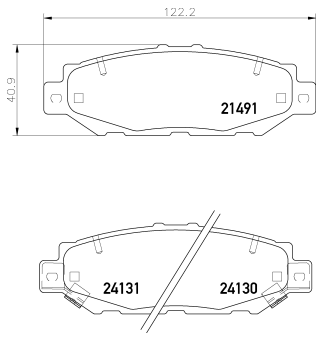

15.5

2149201

21492 195 0 5

VOLVO

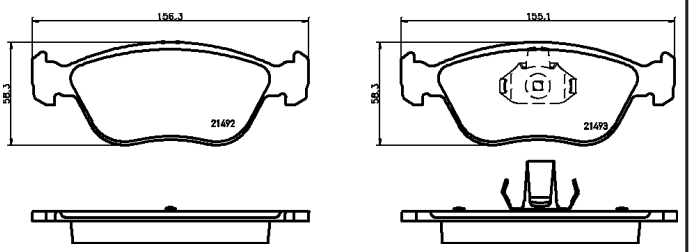

19.5

2149501

21495 170 0 5

SUBARU

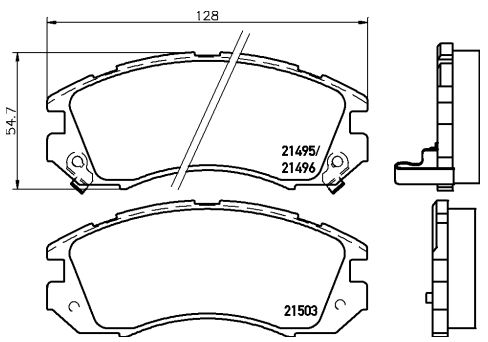

17

2149701

21497 180 0 5

HONDA, HONDA (GAC)

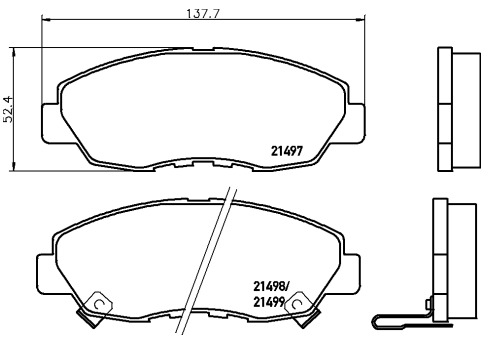

18

2150001

21500 148 0 5

SUZUKI

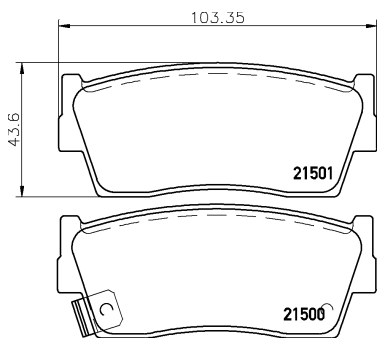

14.8

2150401

21504 170 1 5

CITROËN, RENAULT

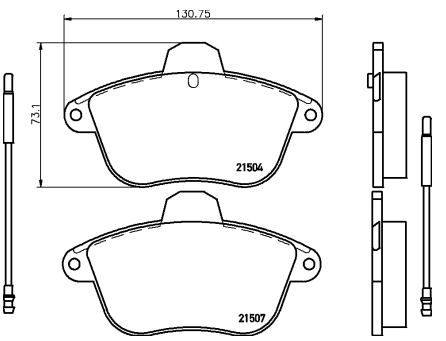

17

2150701

21507 170 1 4

PEUGEOT

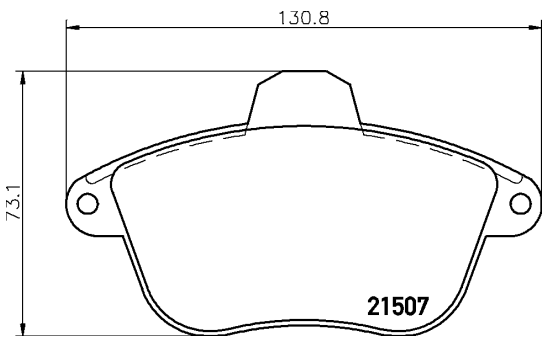

17

2151503

21515 180 1 5

HONDA, LAND ROVER, MG, ROVER

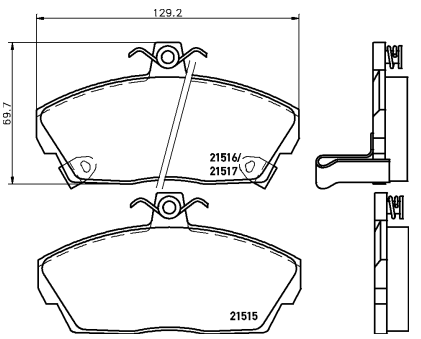

18

2151504

21515 180 1 4

LAND ROVER

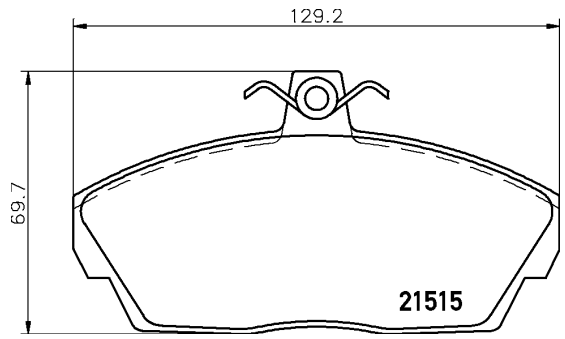

18

2151801

21518 170 1 4

MG

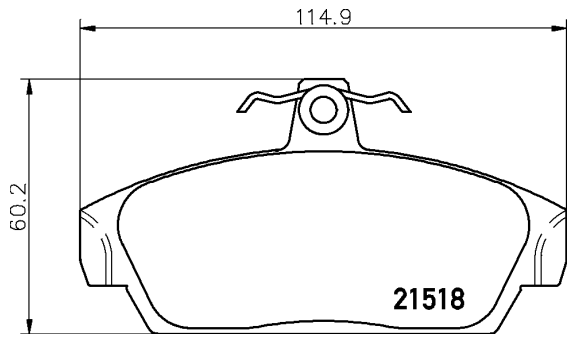

17

2151901

21519 180 0 4

LAND ROVER

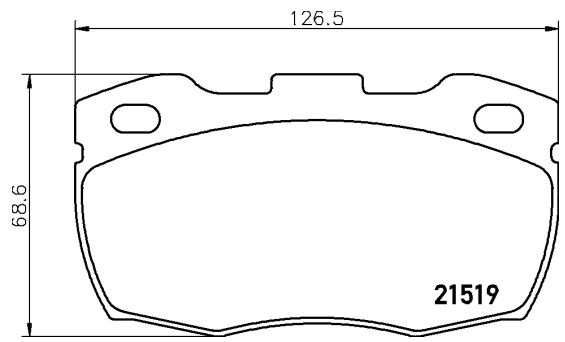

18

2152001

21520 180 1 5

ROVER

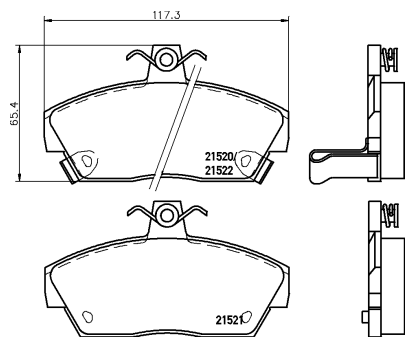

18

2152601

21526 170 0 5

NISSAN, NISSAN (DONGFENG)

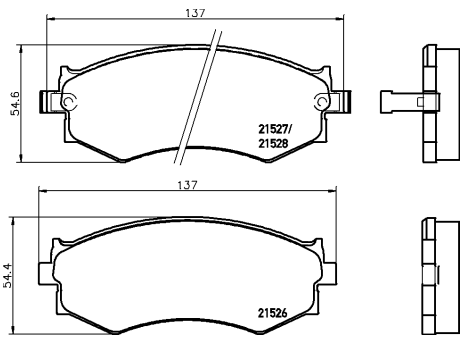

17

2153901

21539 150 0 5

FORD AUSTRALIA, MAZDA

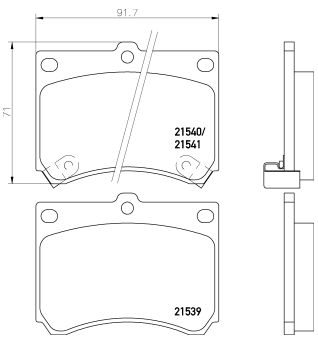

15

2154302

21543 165 0 5

CHEVROLET, HOLDEN, ISUZU, LANDWIND (JMC), OPEL, VAUXHALL

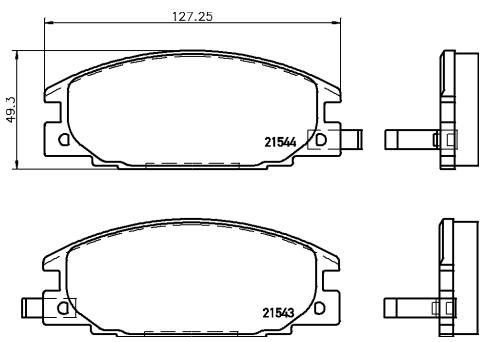

16.5

2154501

21545 156 1 4

NISSAN

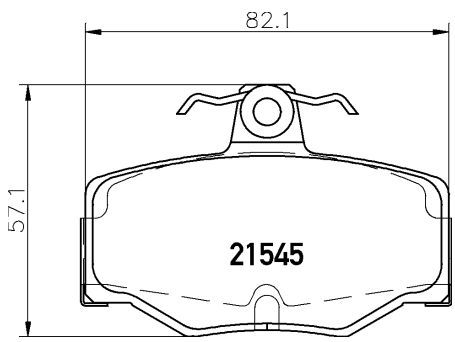

15.6

2154601

21546 175 0 4

NISSAN

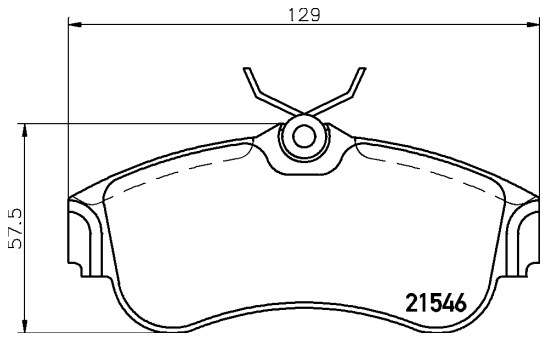

17.5

2155301

21553 140 0 5

HYUNDAI, HYUNDAI (BEIJING), KIA, KIA (DYK)

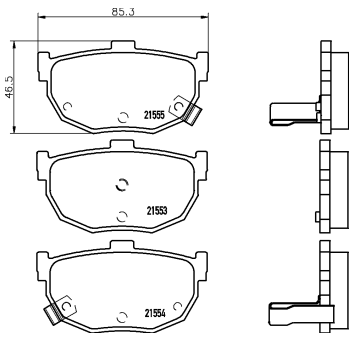

14

2155901

21559 125 0 4

SUZUKI

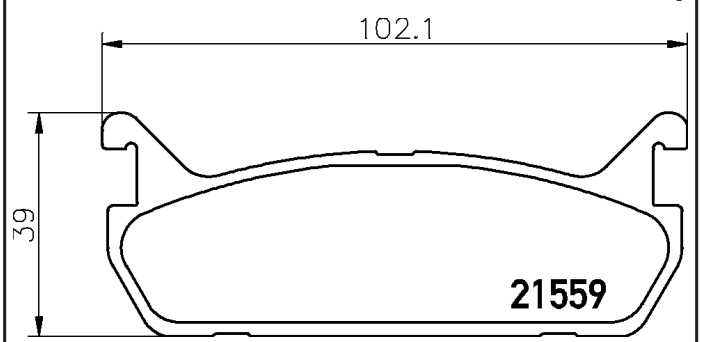

12.5

2156101

21561 170 0 5

INFINITI, NISSAN, NISSAN (DONGFENG), SUZUKI (CHANGAN)

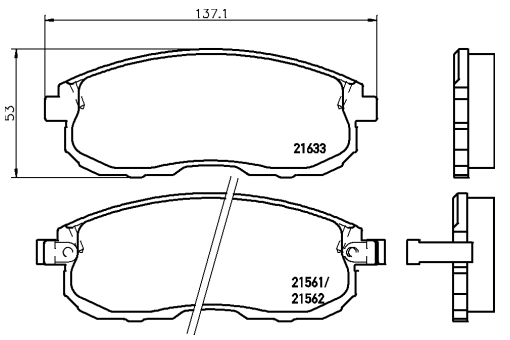

17

2156201

21562 170 0 5

NISSAN

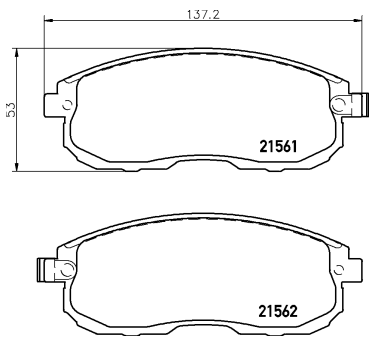

17

2157101

21571 171 1 4

EUNOS, FORD AUSTRALIA, MAZDA

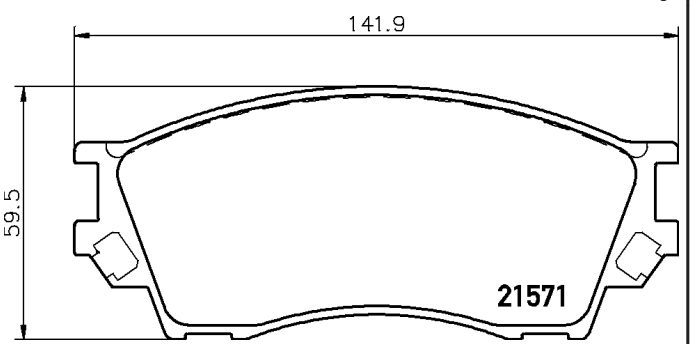

17.1

2157302

21573 140 1 5

MERCEDES-BENZ, SSANGYONG

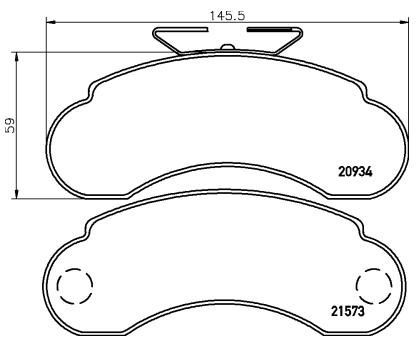

14

2158001

21580 143 0 5

MITSUBISHI, NISSAN, SUBARU

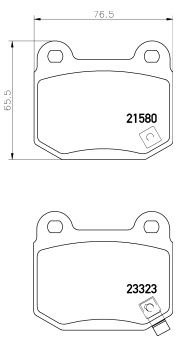

14.3

2159502

21595 183 2 5

RENAULT

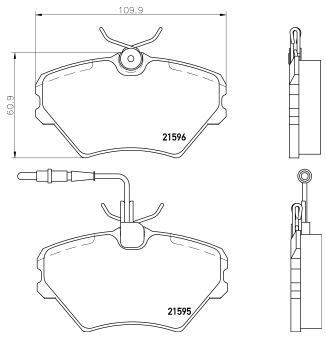

18.3

2159701

21597 110 1 5

RENAULT

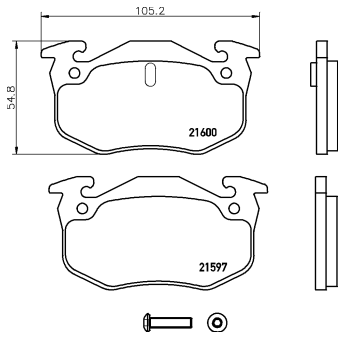

11

2160101

21601 176 0 5

TOYOTA

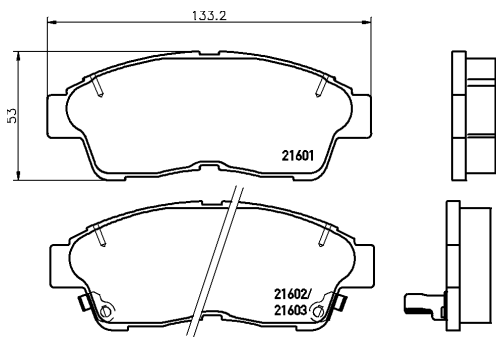

17.6

2160601

21606 166 2 4

ALFA ROMEO, LANCIA

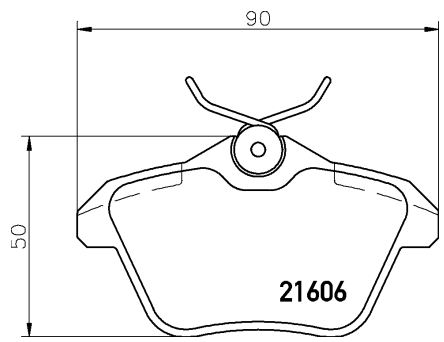

16.6

2160702

21607 173 0 5

BMW, WIESMANN

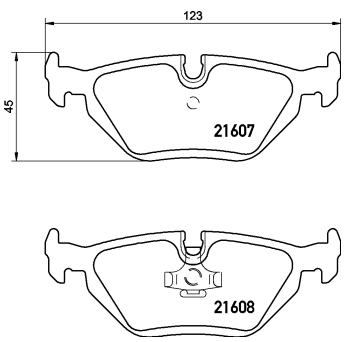

17.3

2160781

21607 173 0 5 epad

BMW, WIESMANN

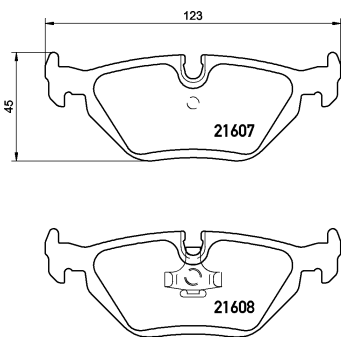

17.3

2162402

21624 204 0 5

AUDI, VOLKSWAGEN

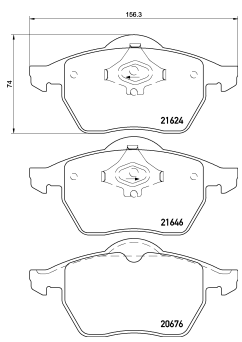

20.4

2162601

21626 158 0 4

NISSAN

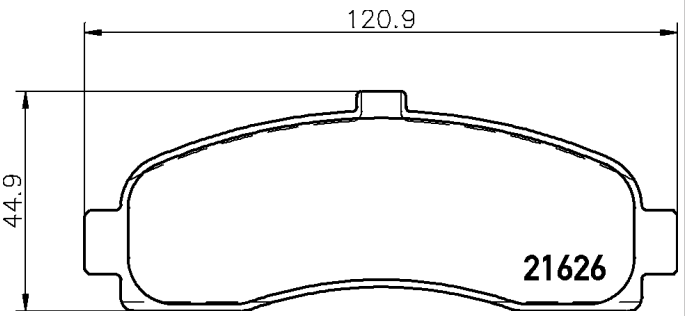

15.8

2163102

21631 170 1 4

CITROËN

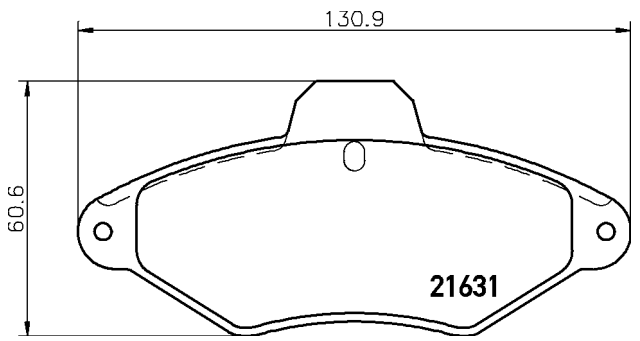

17

2163201

21632 160 1 4

CITROËN

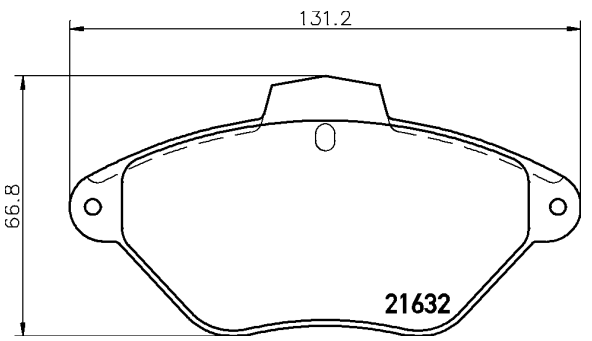

16

2163301

21633 170 1 5

SUZUKI

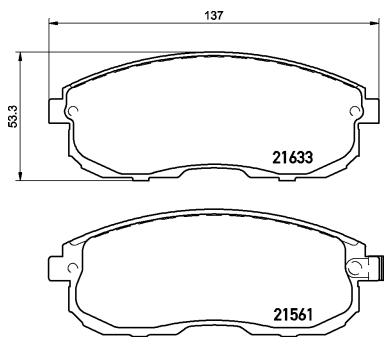

17

2163501

21635 182 1 5

VOLKSWAGEN

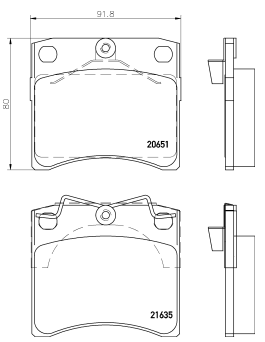

18.2

2163702

21637 190 0 5

ALFA ROMEO

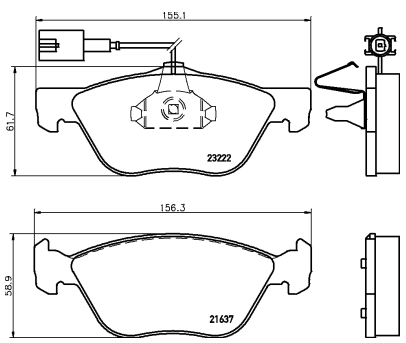

19

2164701

21647 160 0 5

CHRYSLER, HYUNDAI, MITSUBISHI, PROTON

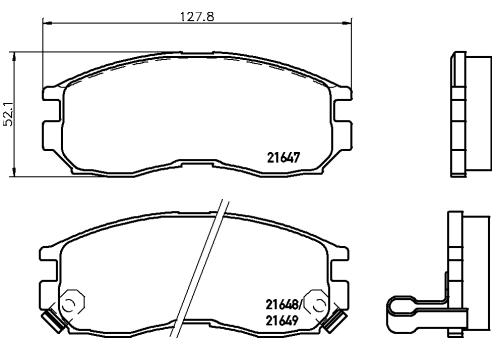

16

2165001

21650 150 1 4

DAIHATSU, HUALI, MITSUBISHI, PREMIER, PROTON, TOYOTA, TOYOTA (FAW)

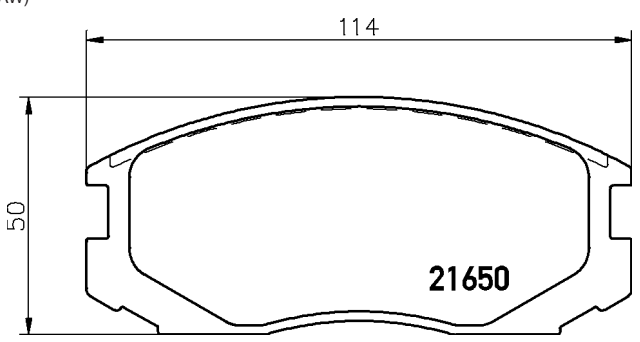

15

2165101

21651 173 0 5

ACURA, HONDA, HONDA (GAC), ROVER

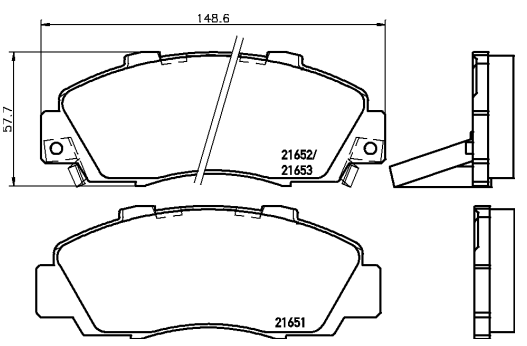

17.3

2165404

21654 153 1 5

FORD AUSTRALIA, KIA, MAZDA

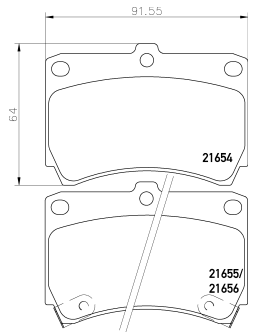

15

2166201

21662 178 1 4

SKODA, VOLKSWAGEN

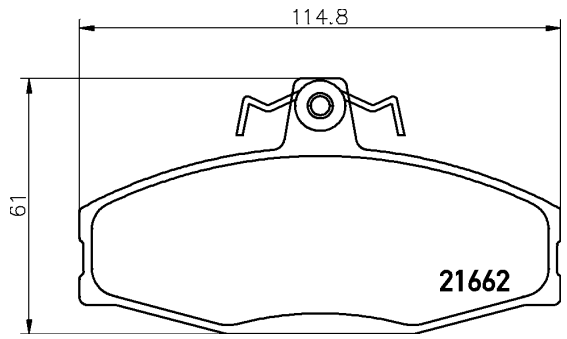

17.8

2166404

21664 198 0 5

MERCEDES-BENZ

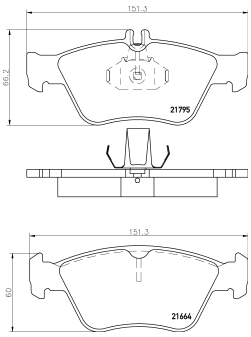

19.8

2166481

21664 198 0 5 epad

MERCEDES-BENZ

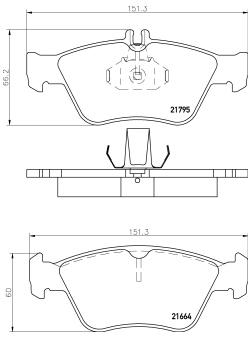

19.8

2167001

21670 203 0 5

CHRYSLER, MERCEDES-BENZ

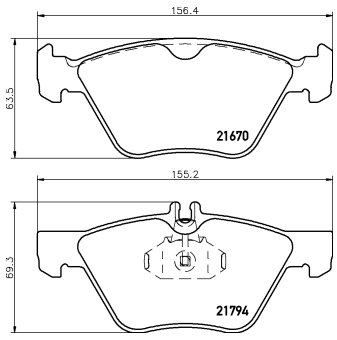

20.3

2167081

21670 203 0 5 epad

CHRYSLER, MERCEDES-BENZ

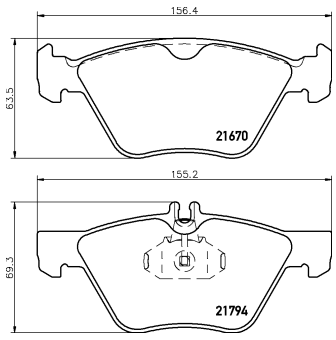

20.3

2167403

21674 193 1 5

CITROËN, PEUGEOT

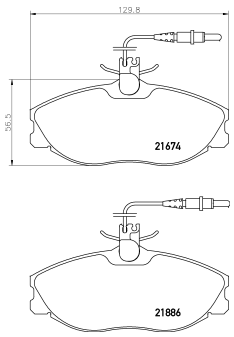

19.3

2167703

21677 203 0 5

BMW, BMW (BRILLIANCE)

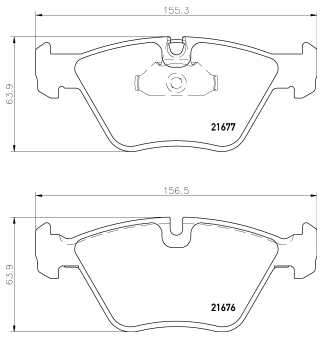

20.3

2167781

21677 203 0 5 epad

BMW, BMW (BRILLIANCE)

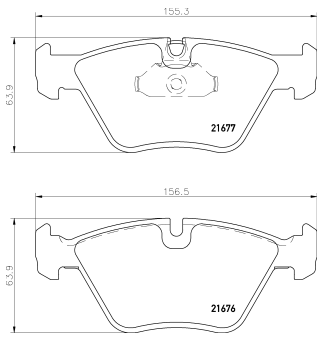

20.3

2167901

21679 150 0 5 T4067

TOYOTA

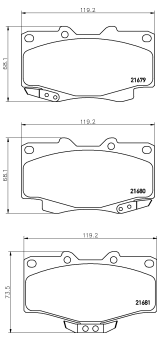

15

2167904

21679 150 0 5 T4136

TOYOTA

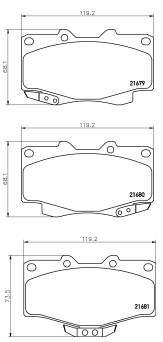

15

2168001

21680 150 0 5

TOYOTA

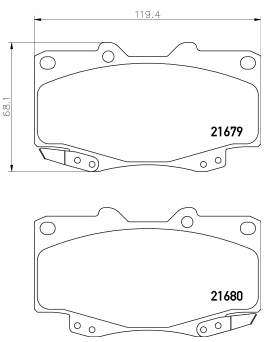

15

2168003

21680 175 0 5

TOYOTA

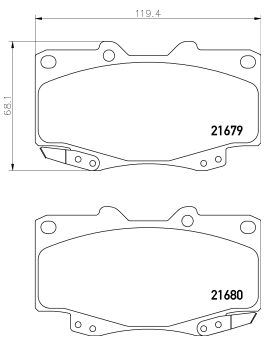

17.5

2168202

21682 145 1 5

MG, ROVER

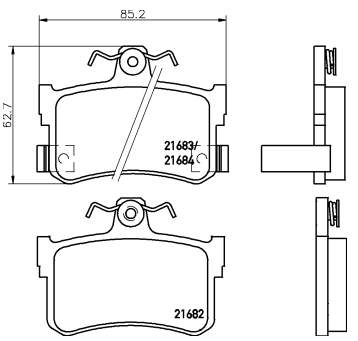

14.5

2168801

21688 153 0 4

TOYOTA

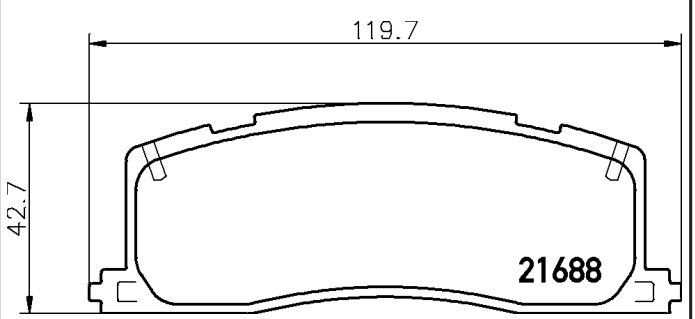

15.3

2168901

21689 155 0 4

GREAT WALL, TOYOTA

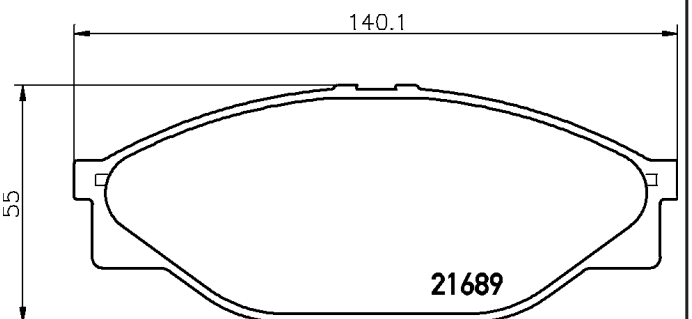

15.5

2169103

21691 173 0 5

ALPINA, BMW, BMW (BRILLIANCE)

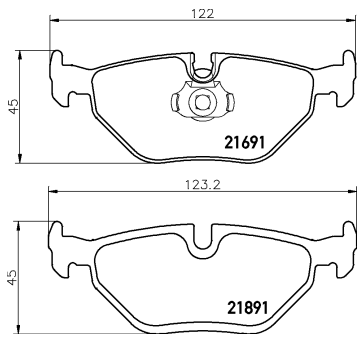

17.3

2169181

21691 173 0 5 epad

ALPINA, BMW, BMW (BRILLIANCE)

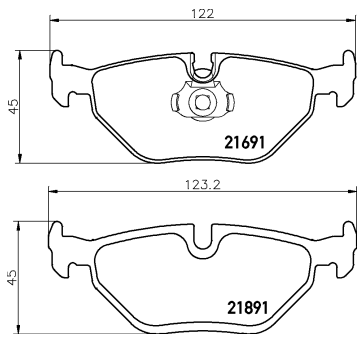

17.3

2169401

21694 173 0 5

HONDA

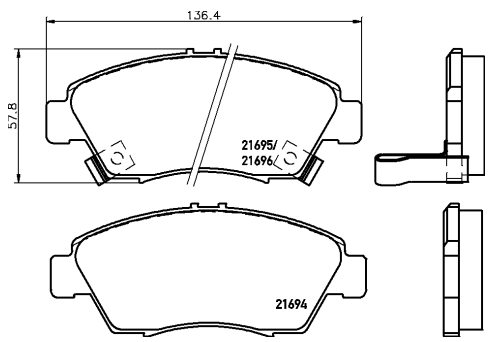

17.3

2169701

21697 158 0 5

HONDA, HONDA (GAC)

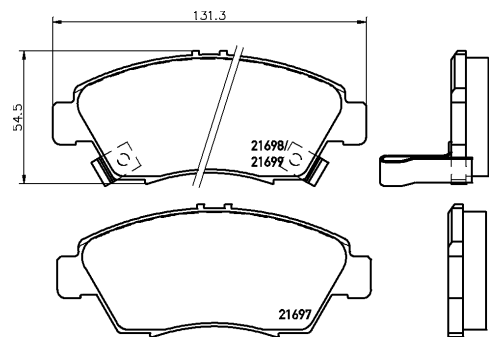

15.8

2170301

21703 150 0 5

SUBARU

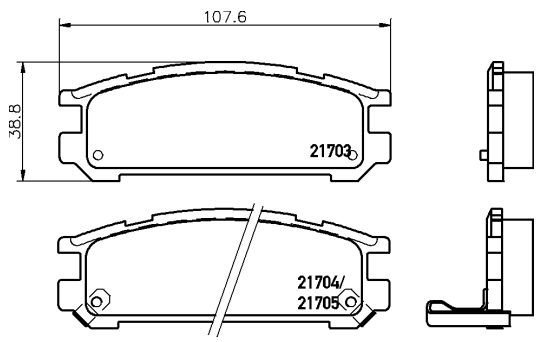

15

2170602

21706 155 0 5

CHRYSLER, HYUNDAI, MITSUBISHI, PROTON

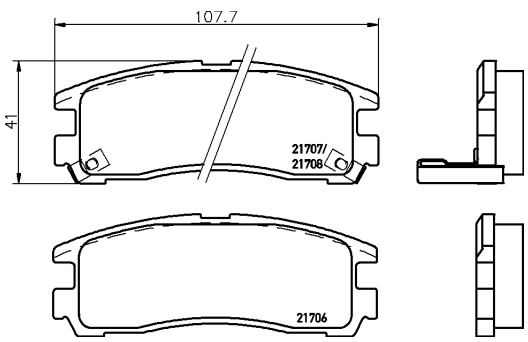

15.5

2171201

21712 140 0 4

DAIHATSU

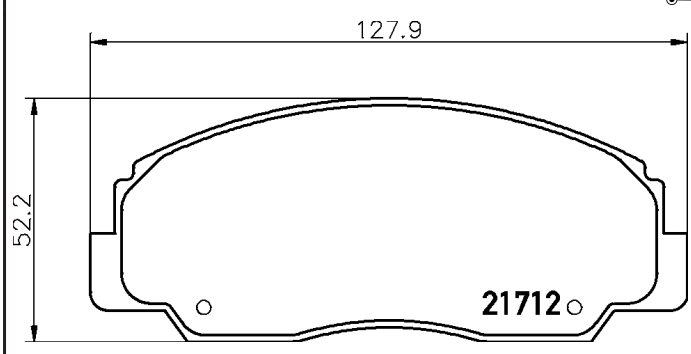

14

2171301

21713 164 0 5

INFINITI, NISSAN, NISSAN (DONGFENG)

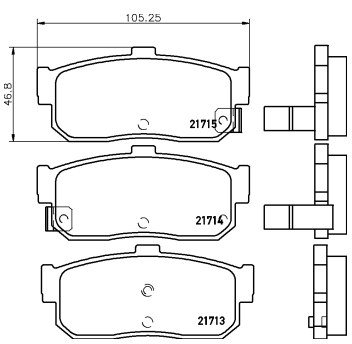

16.4

2171602

21716 159 0 5

NISSAN

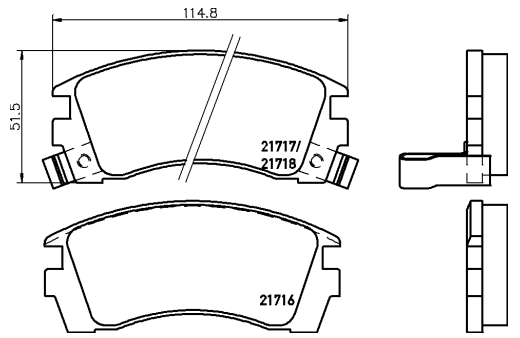

15.9

2171901

21719 146 0 5

ACURA, HONDA, HONDA (DONGFENG), HONDA (GAC), MG, ROVER, SUZUKI, SUZUKI (CHANGAN)

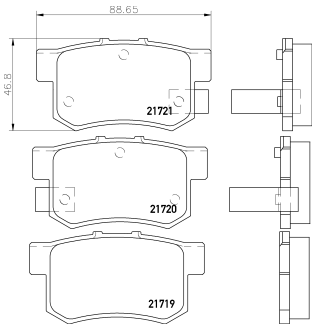

14.6

2172001

21720 146 1 5

FIAT, HONDA, SUZUKI

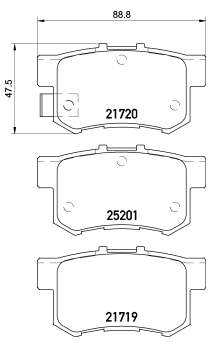

14.6

2172402

21724 193 1 5

PEUGEOT

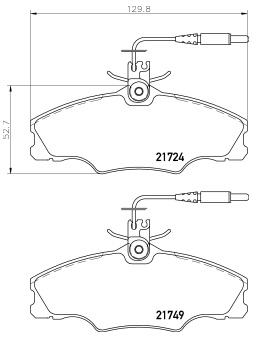

19.3

2172501

21725 170 0 5

HAFEI, HYUNDAI, KIA, MITSUBISHI

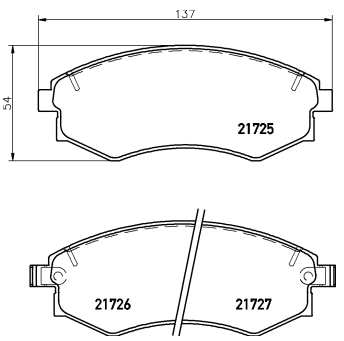

17

2172502

21725 156 0 5

DAEWOO, SSANGYONG

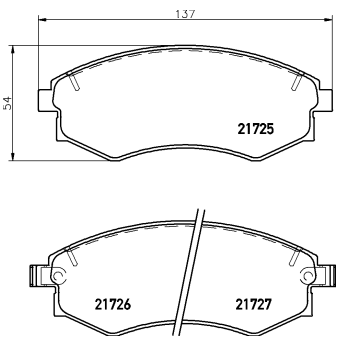

15.6

2173001

21730 140 0 4

SUZUKI

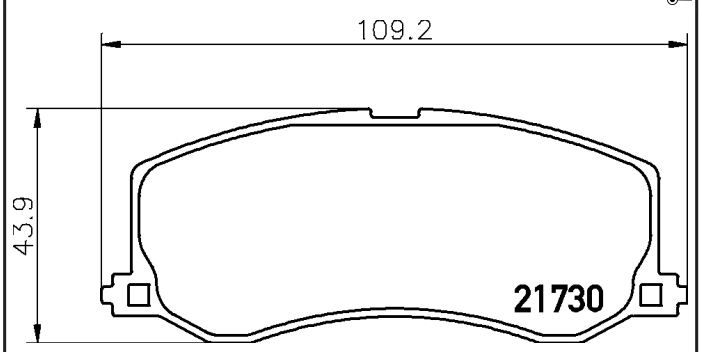

14

2173401

21734 140 0 5

NISSAN

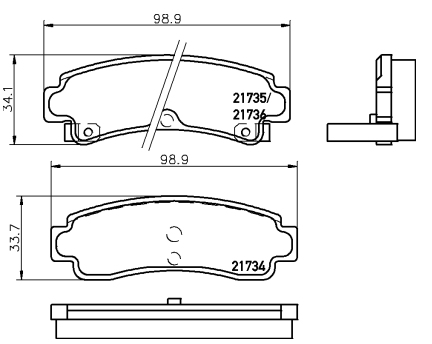

14

2173801

21738 130 0 5

ACURA, HONDA, HONDA (GAC)

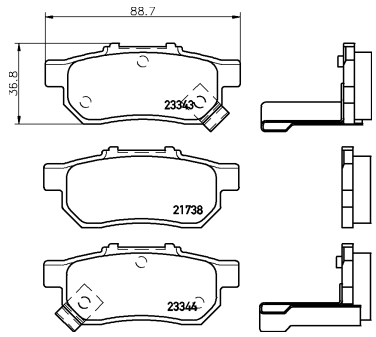

13

2175901

21759 153 0 5

TOYOTA

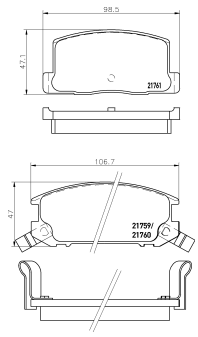

15.3

2176603

21766 137 1 4

EUNOS, MAZDA

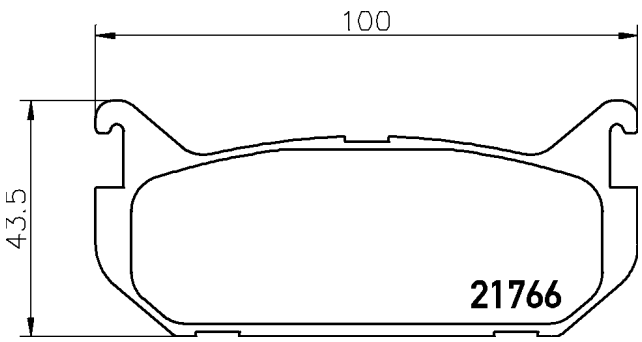

14.8

2178401

21784 150 0 5

TOYOTA

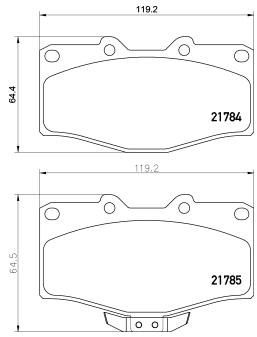

15

2178403

21784 150 0 4

TOYOTA

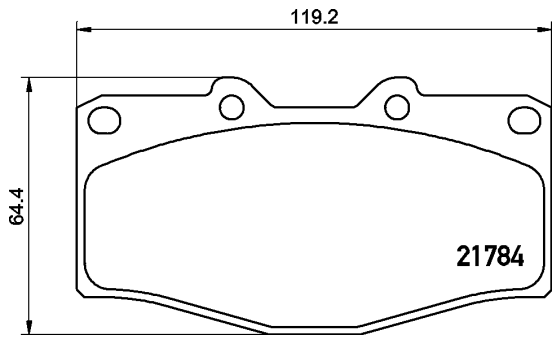

15

2178601

21786 155 0 5

LEXUS, TOYOTA

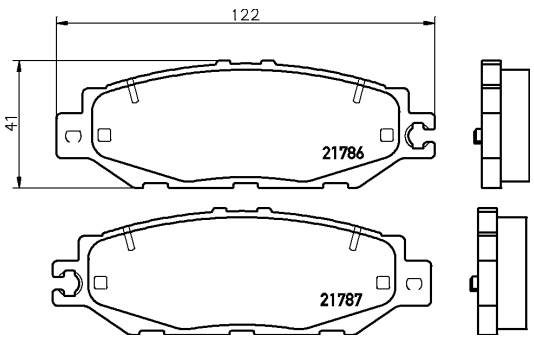

15.5

2179101

21791 170 0 4

LEXUS, TOYOTA

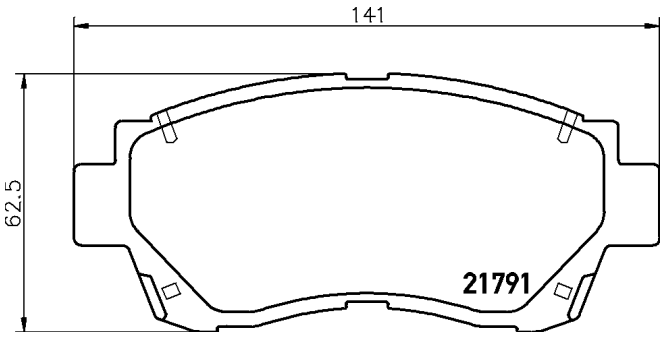

17

2179203

21792 155 0 4

PORSCHE

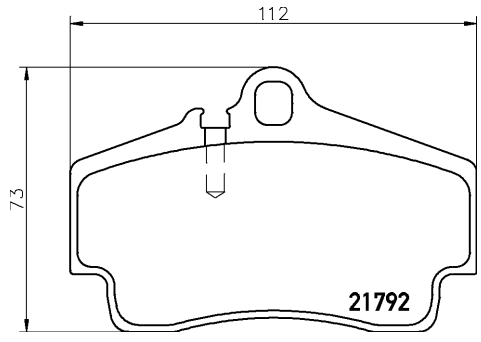

15.5

2179701

21797 197 2 5

CITROËN, FIAT, PEUGEOT

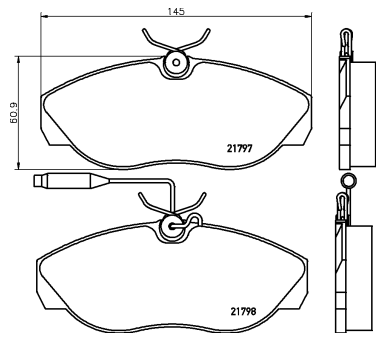

19.7

2179901

21799 197 2 5

CITROËN, FIAT, PEUGEOT

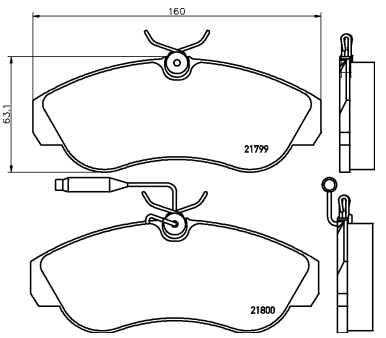

19.7

2180101

21801 193 2 5

CITROËN, FIAT, LANCIA, PEUGEOT

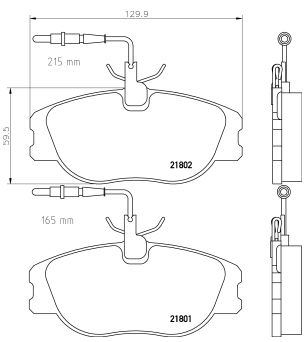

19.3

2182001

21820 155 0 5

HUMMER, JEEP

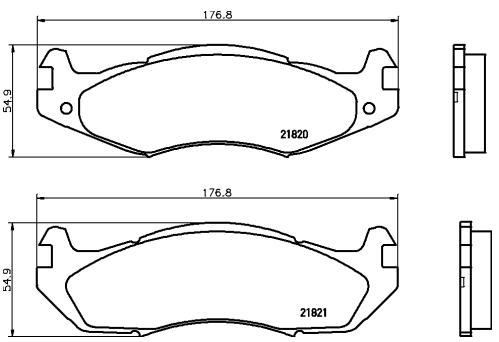

15.5

2182202

21822 172 0 5

JEEP, JEEP (BJC), KIA

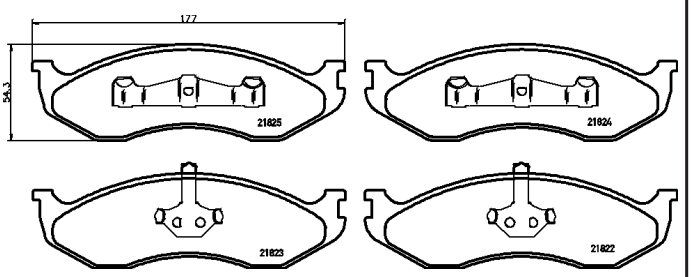

17.2

2182702

21827 173 0 5

CITROËN, PEUGEOT

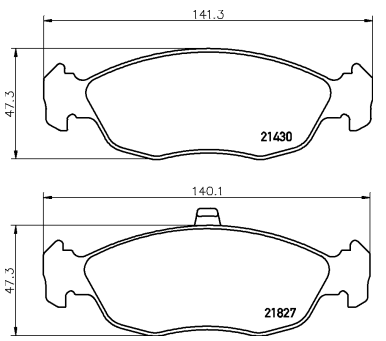

17.3

2183001

21830 157 0 5

FORD USA

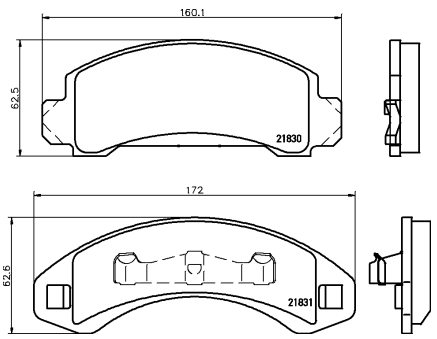

15.7

2183201

21832 150 0 4

FORD, KIA

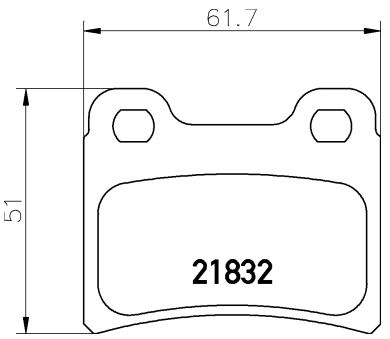

15

Illustrations

2183301

21833 155 0 5

LEXUS, TOYOTA

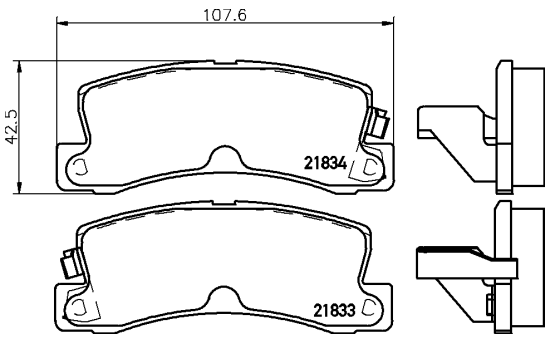

15.5

2183601

21836 155 0 5

TOYOTA

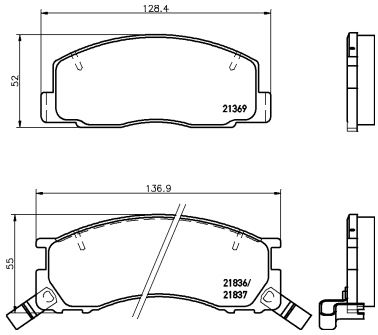

15.5

2184002

21840 140 0 5

MITSUBISHI

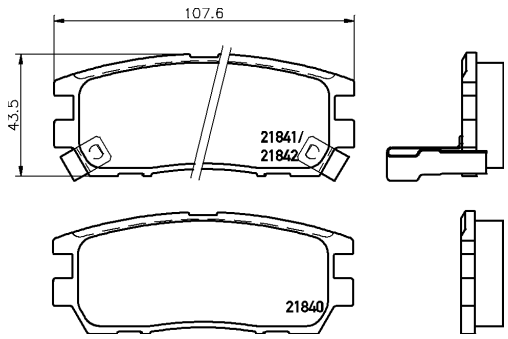

14

2184501

21845 165 0 5

ACURA, HOLDEN, ISUZU, OPEL, VAUXHALL

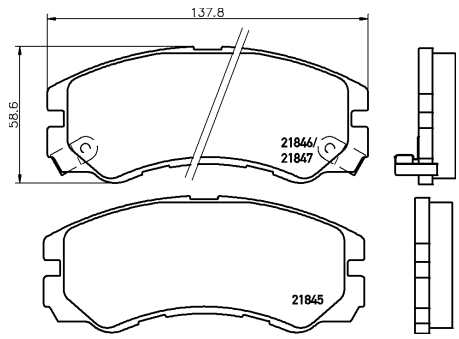

16.5

2184802

21848 197 0 5

FORD, SEAT, VOLKSWAGEN

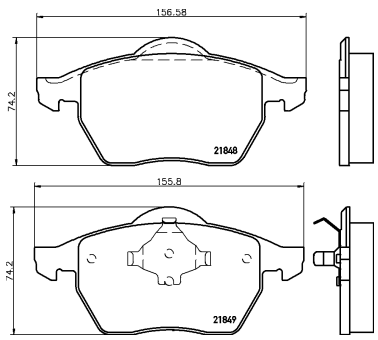

19.7

2184903

21849 206 0 5

FORD, SEAT, VOLKSWAGEN

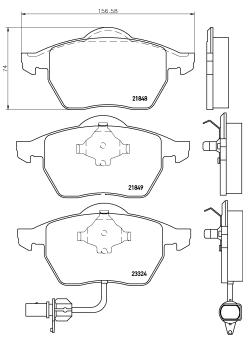

20.6

2185401

21854 150 0 4

NISSAN, SUBARU

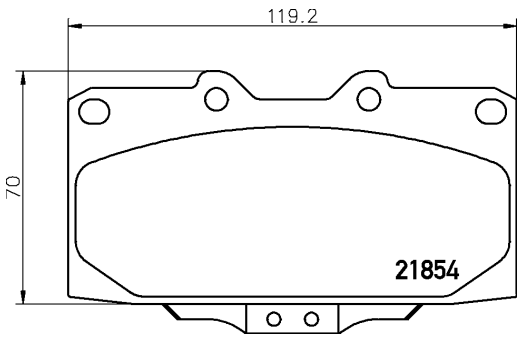

15

2185701

21857 170 0 5

CITROËN

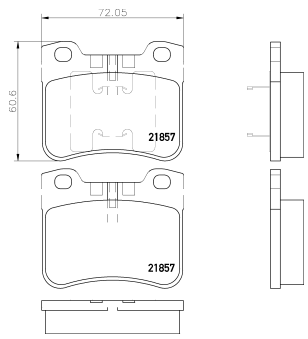

17

2186201

21862 183 0 5

CHEVROLET, DAEWOO, FSO, OPEL, VAUXHALL, ZAZ

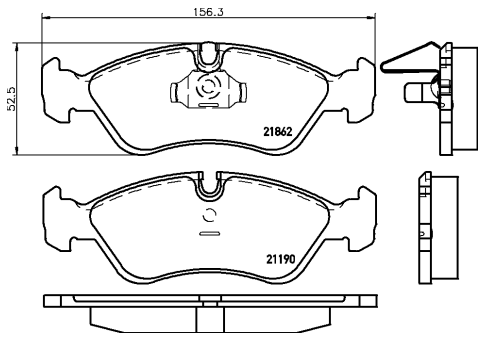

18.3

2186601

21866 153 0 5

SEAT, VOLKSWAGEN

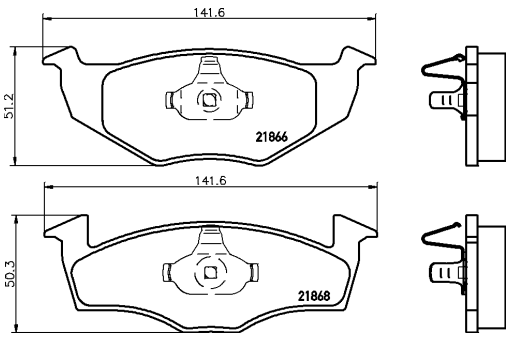

15.3

2186602

21866 172 0 5

SEAT, SKODA, VOLKSWAGEN

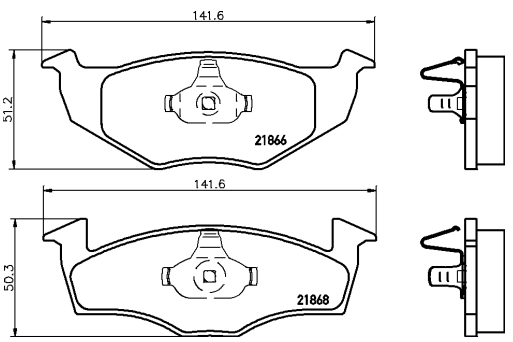

17.2

2186603

21866 197 0 5

SEAT, VOLKSWAGEN

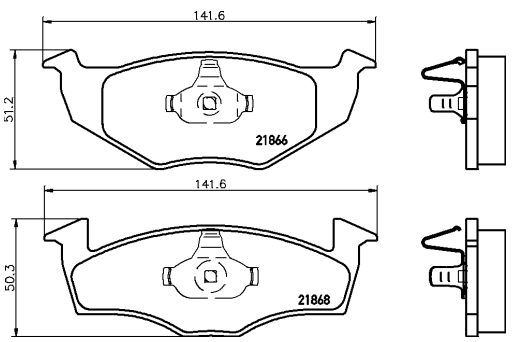

19.7

2186801

21868 172 0 5

SKODA, VOLKSWAGEN

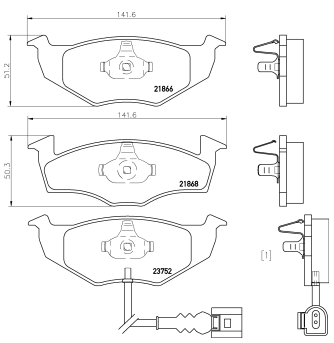

17.2

2187202

21872 145 0 5

DONGNAN (SOUEAST), MITSUBISHI, PROTON

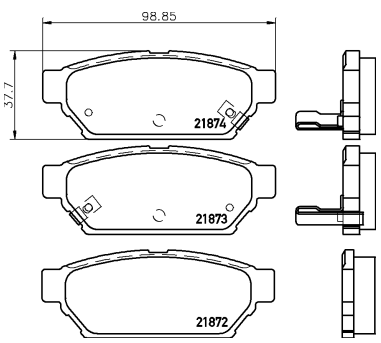

14.5

2187503

21875 158 0 5

ACURA, CHANGFENG, HOLDEN, ISUZU, OPEL, VAUXHALL

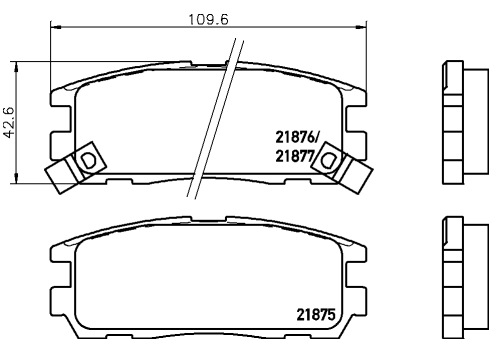

15.8

2187901

21879 185 0 5

HONDA, ROVER

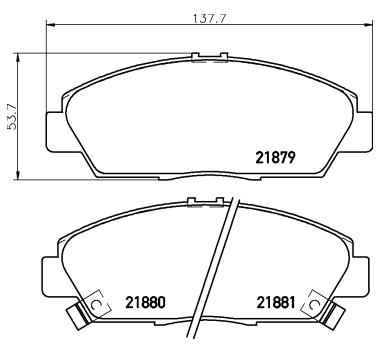

18.5

2188302

21883 196 0 5

VOLKSWAGEN

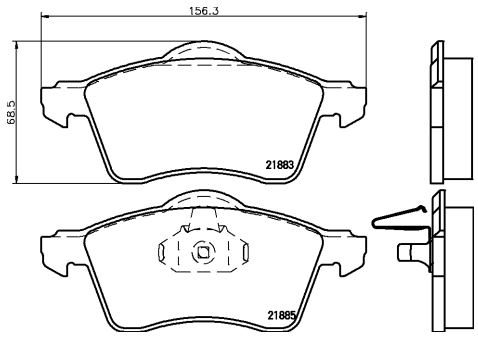

19.6

2188501

21885 206 0 5

VOLKSWAGEN

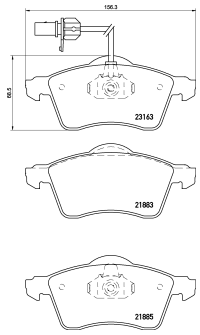

20.6

2188801

21888 184 1 5

RENAULT

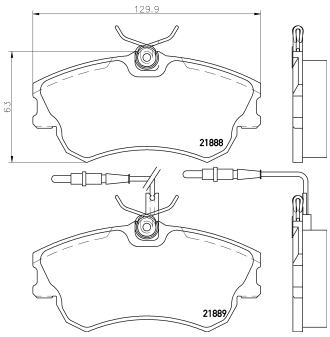

18.4

2189202

21892 184 0 5

KIA

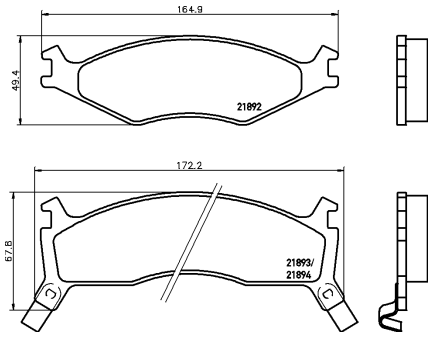

18.4

2189801

21898 157 0 5 T4080

MERCEDES-BENZ

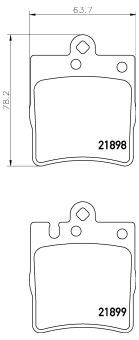

15.7

2189803

21898 157 0 5 T4209

MERCEDES-BENZ

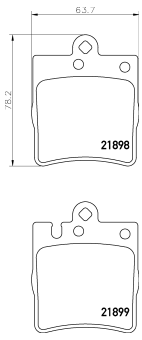

15.7

2189881

21898 157 0 5 epad

MERCEDES-BENZ

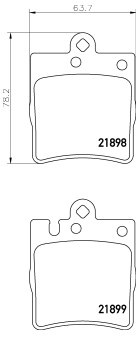

15.7

2190003

21900 158 0 4

MERCEDES-BENZ

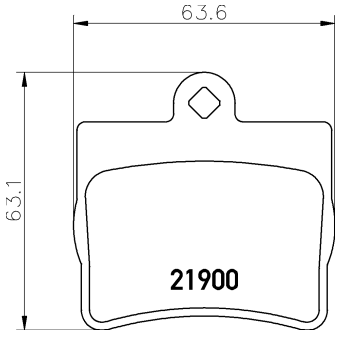

15.8

Illustrations

2190403

21904 169 0 5

MERCEDES-BENZ

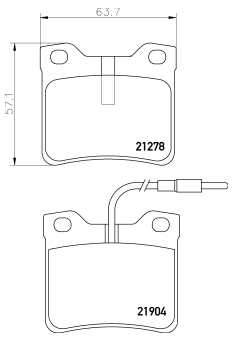

16.9

2190701

21907 154 0 5

CHEVROLET, SUZUKI

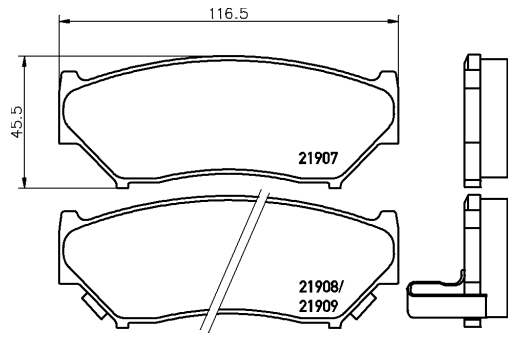

15.4

2191003

21910 198 0 5

FORD, FORD USA, MERCURY

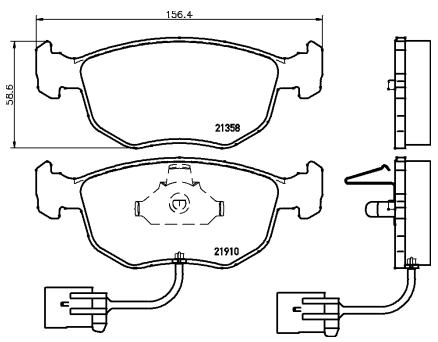

19.8

2191102

21911 206 0 5

AUDI, SEAT, SKODA, VOLKSWAGEN

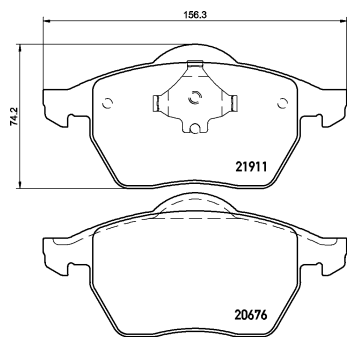

20.6

2191901

21919 153 0 4 T4203

MERCEDES-BENZ

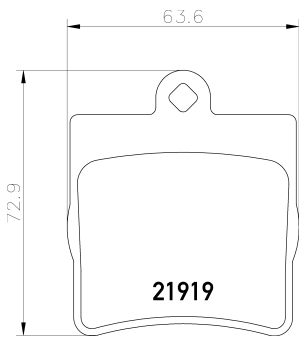

15.3

2191903

21919 157 0 4 T4271

CHRYSLER, MERCEDES-BENZ

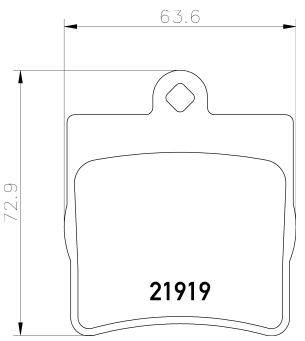

15.7

2191981

21919 153 0 4 epad

MERCEDES-BENZ

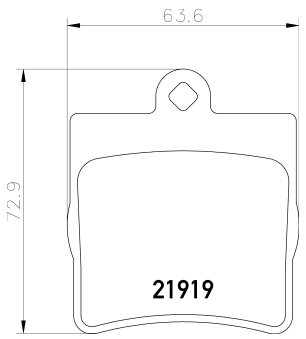

15.3

2192001

21920 151 1 4

MITSUBISHI, PROTON, VOLVO

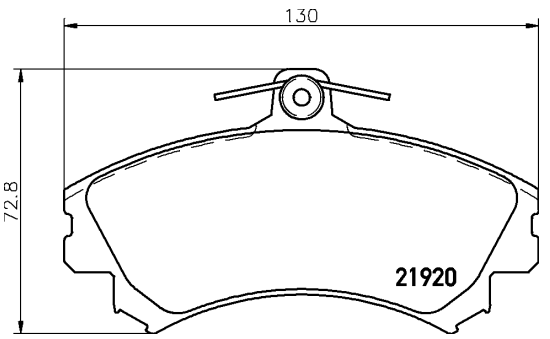

15.1

2192003

21920 174 1 4

MITSUBISHI, SMART

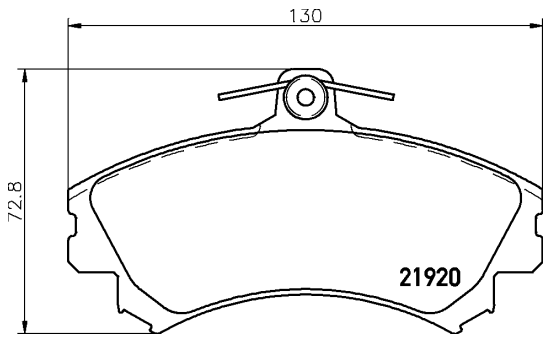

17.4

2192701

21927 179 0 5

ALFA ROMEO, FIAT, LANCIA

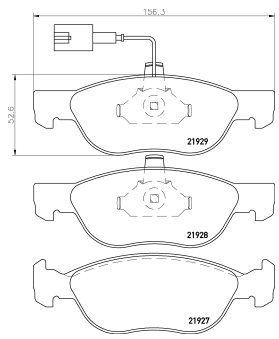

17.9

2192703

21927 179 9 5

FIAT

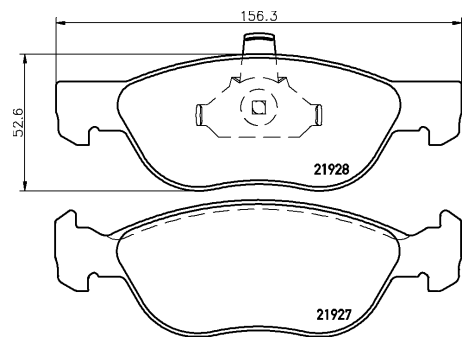

17.9

2192901

21929 179 0 5

ALFA ROMEO

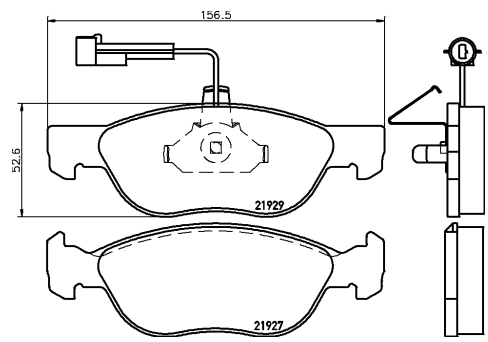

17.9

2193002

21930 179 0 5

FIAT, LANCIA

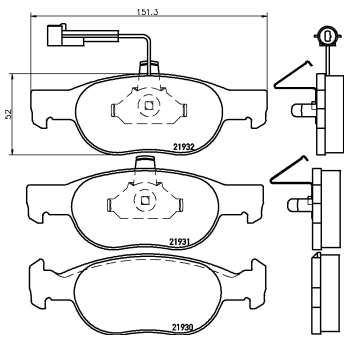

17.9

2193101

21931 179 0 5

FIAT

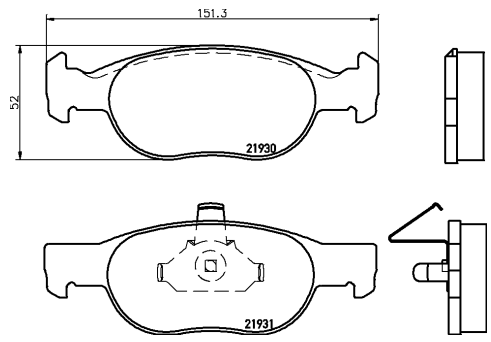

17.9

2193201

21932 179 0 5

ALFA ROMEO

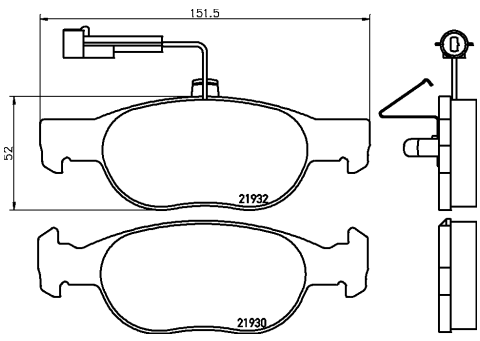

17.9

2193402

21934 173 0 5

BMW, BMW (BRILLIANCE), MG, ROEWE (SAIC), ROVER, WIESMANN

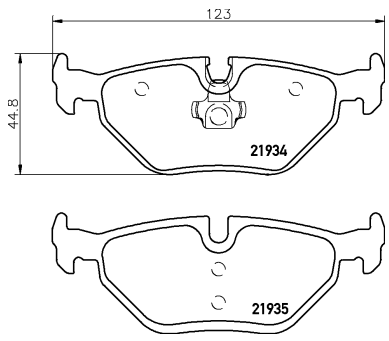

17.3

2193404

21934 163 0 5

SAAB

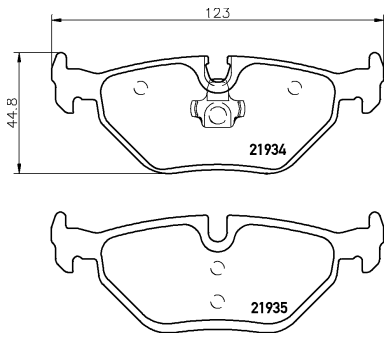

16.3

2193481

21934 173 0 5 epad

BMW, BMW (BRILLIANCE), MG, ROEWE (SAIC), ROVER, WIESMANN

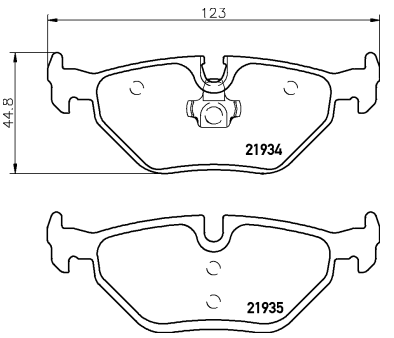

17.3

2193702

21937 155 0 4

PORSCHE

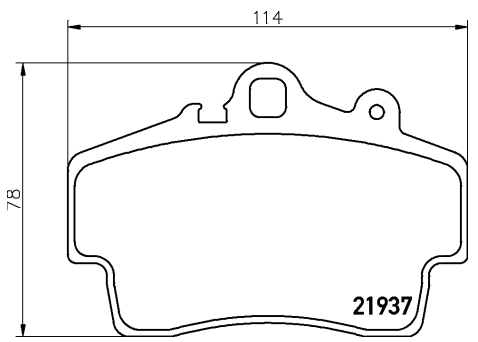

15.5

2193801

21938 204 0 5

AUDI, VOLKSWAGEN

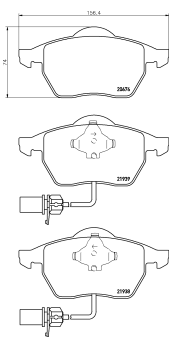

20.4

2193881

21938 204 0 5 epad

AUDI, VOLKSWAGEN

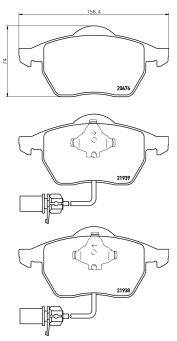

20.4

2194502

21945 162 1 4

SEAT, VOLKSWAGEN

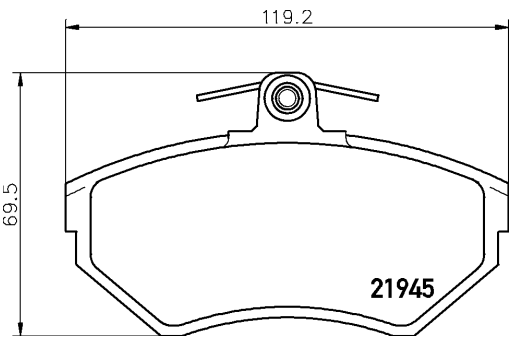

16.2

2194503

21945 196 1 4

AUDI, VOLKSWAGEN

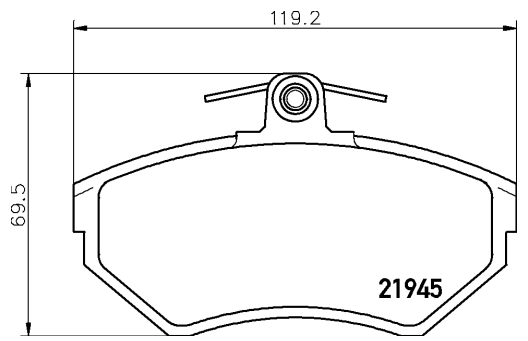

19.6

2194504

21945 196 1 5

AUDI, SEAT, VOLKSWAGEN

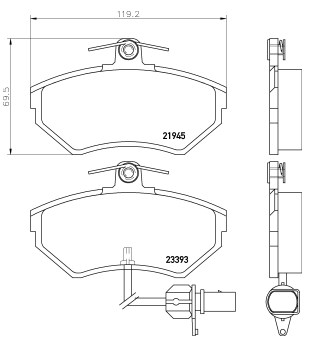

19.6

Illustrations

2194701

21947 150 0 4

LANDWIND (JMC), LEXUS, MITSUBISHI, TOYOTA, TOYOTA (FAW)

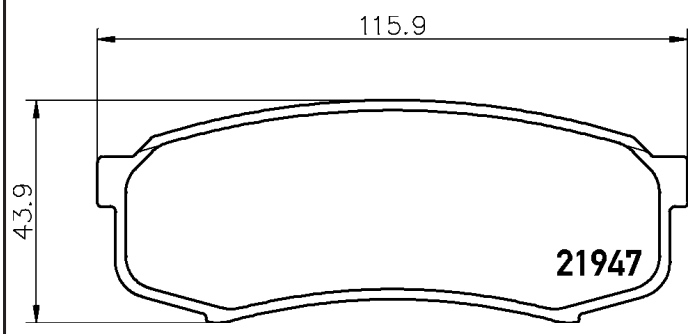

15

2195202

21952 156 0 5

DAIHATSU

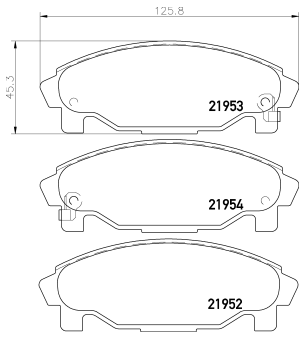

15.6

2195501

21955 160 0 5

TOYOTA

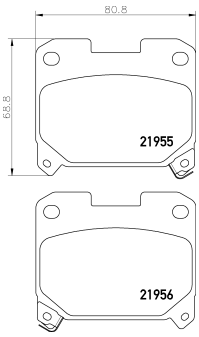

16

2195701

21957 170 0 5

TOYOTA

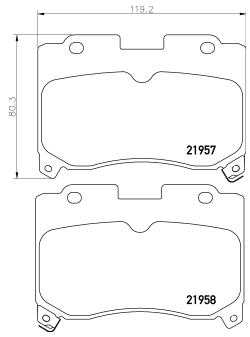

17

2196102

21961 155 1 4

TOYOTA

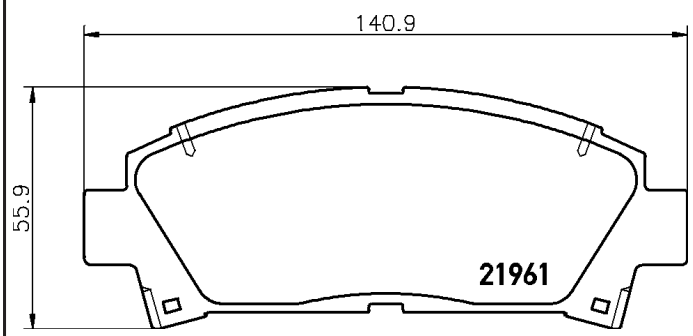

15.5

2196201

21962 180 0 5

FIAT

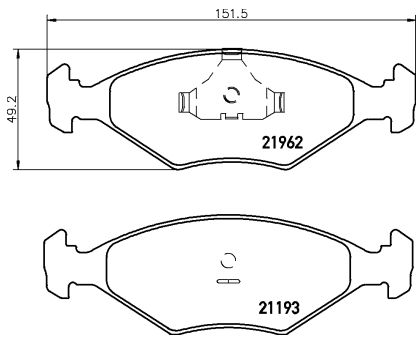

18

2196202

21962 150 0 5

VOLKSWAGEN

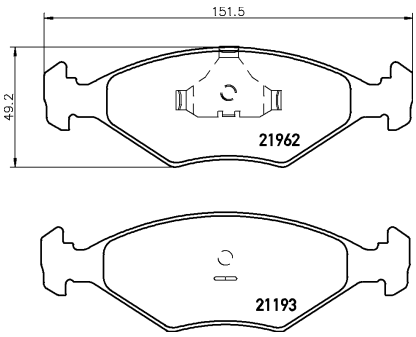

15

2196502

21965 150 0 5

RENAULT

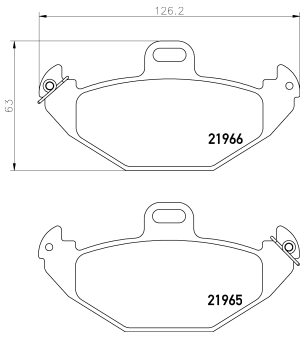

15

2196701

21967 138 0 4

DAIHATSU

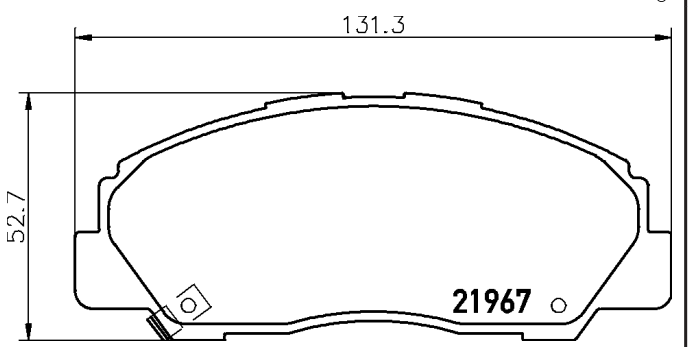

13.8

2196801

21968 140 0 5

PERODUA

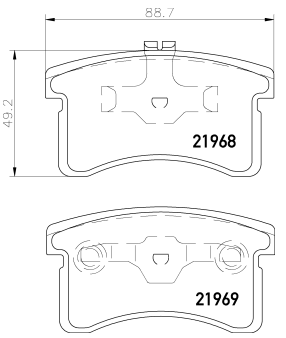

14

2197502

21975 182 0 5

TOYOTA

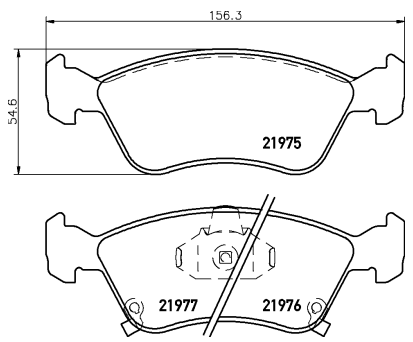

18.2

2198003

21980 180 1 5

NISSAN, RENAULT

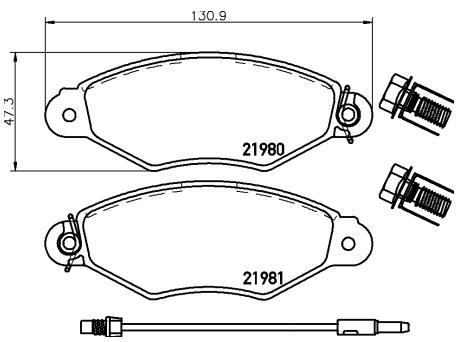

18

2198004

21980 180 2 5

CITROËN, PEUGEOT

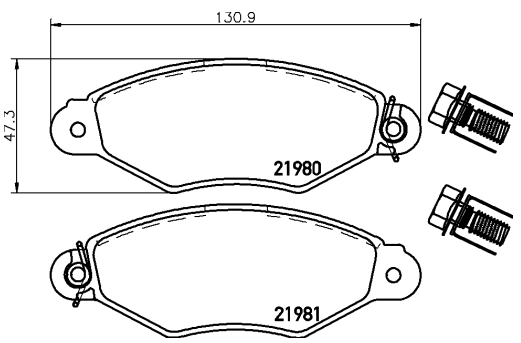

18

2198009

21980 180 3 5

RENAULT

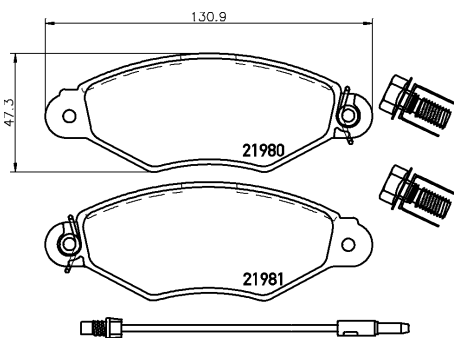

18

2198302

21983 173 1 4

MITSUBISHI, VOLVO

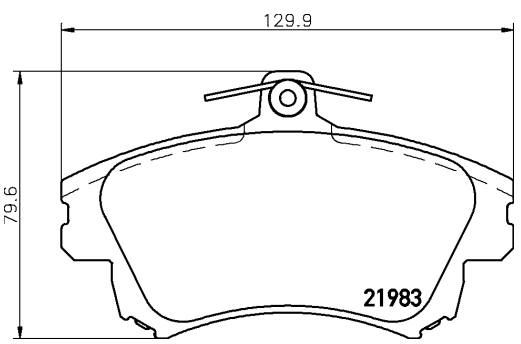

17.3

2198304

21983 165 1 4

MITSUBISHI, SMART

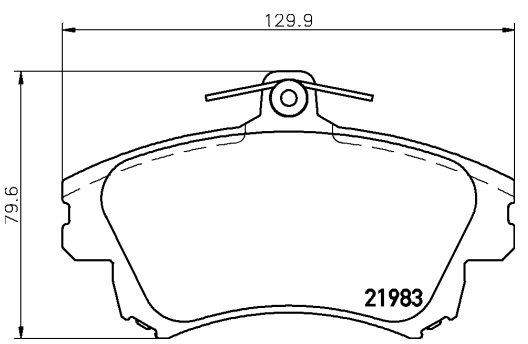

16.5

2198804

21988 180 1 5

PEUGEOT

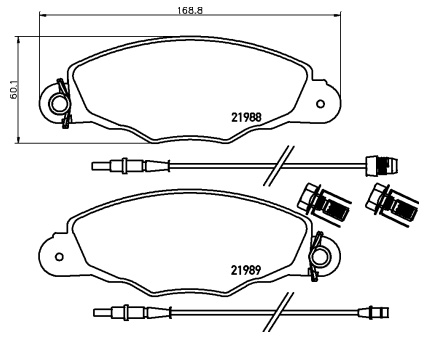

18

2199003

21990 203 0 5

BMW

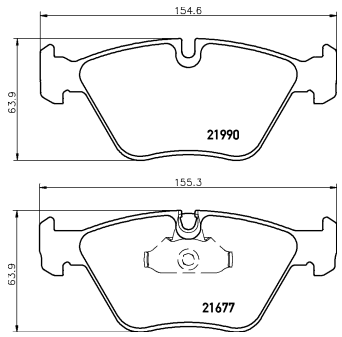

20.3

2199081

21990 203 0 5 epad

BMW

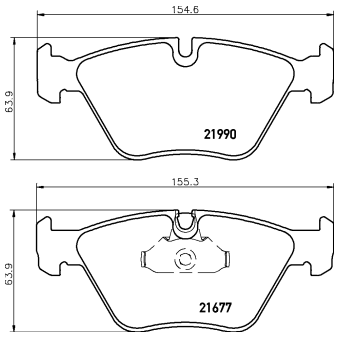

20.3

2199901

21999 158 1 5

SMART

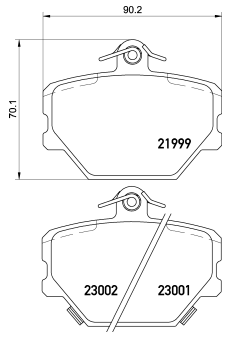

15.8

2300401

23004 155 0 5

NISSAN

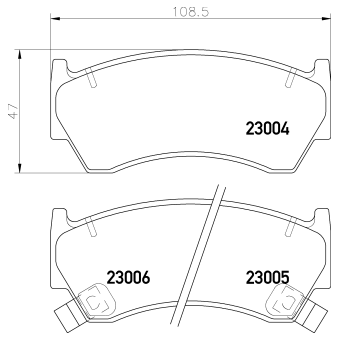

15.5

2300501

23005 155 0 5

NISSAN

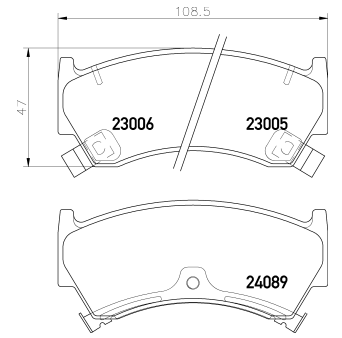

15.5

2300901

23009 155 0 5

TOYOTA

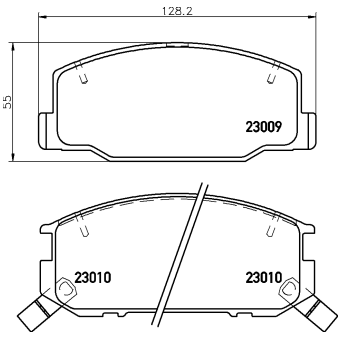

15.5

2301802

23018 204 0 5

AUDI, AUDI (FAW), HONGQI, SEAT, SKODA, VOLKSWAGEN

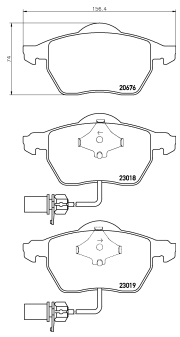

20.4

2301881

23018 204 0 5 epad

AUDI, AUDI (FAW), HONGQI, SEAT, SKODA, VOLKSWAGEN

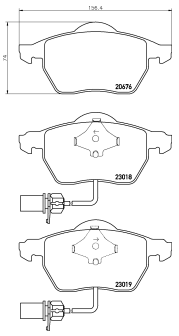

20.4

2302001

23020 179 0 4

MERCEDES-BENZ

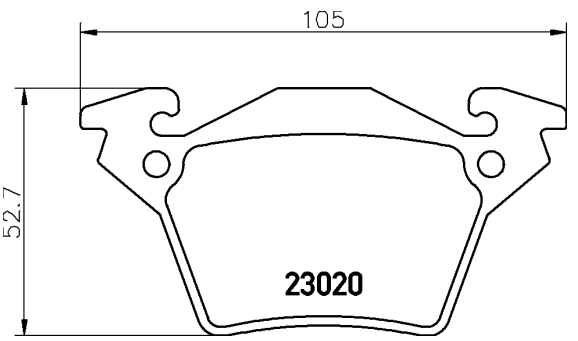

17.9

2302101

23021 189 0 4

MERCEDES-BENZ, PUCH, VOLKSWAGEN

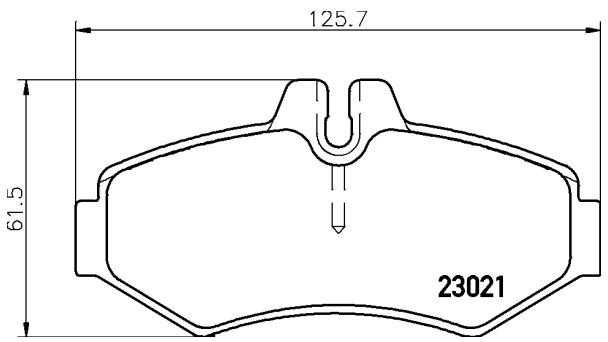

18.9

2302201

23022 209 0 4

MERCEDES-BENZ

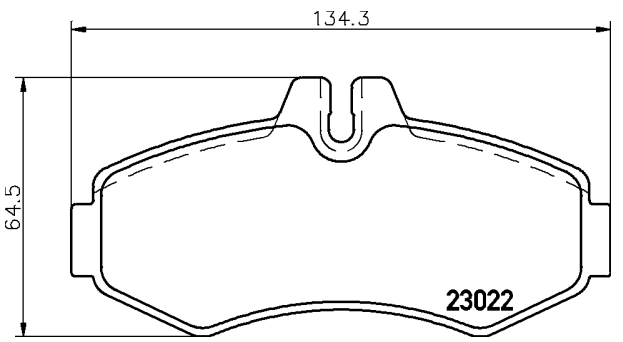

20.9

2302301

23023 150 0 5

NISSAN

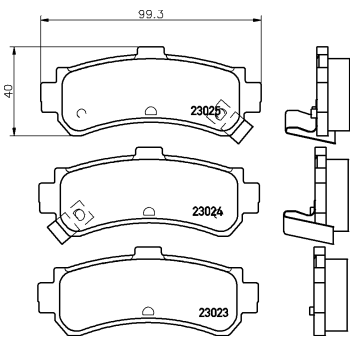

15

2303201

23032 155 0 5

TOYOTA

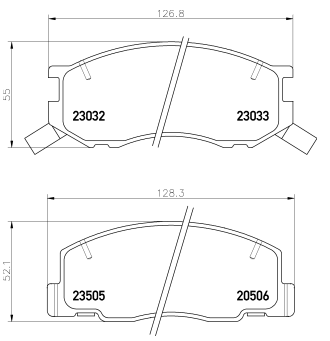

15.5

2303401

23034 186 0 5

VOLKSWAGEN

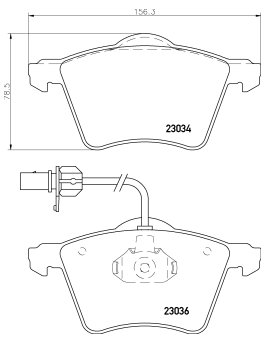

18.6

2304201

23042 190 1 4

CITROËN, FIAT, PEUGEOT

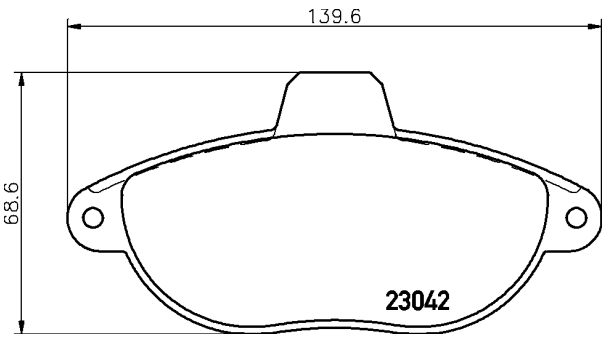

19

2304301

23043 186 0 5

CHRYSLER, DODGE, PLYMOUTH

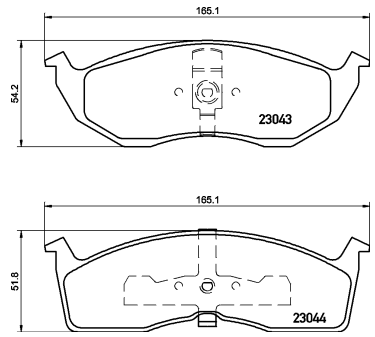

18.6

2306101

23061 140 0 4

DAEWOO

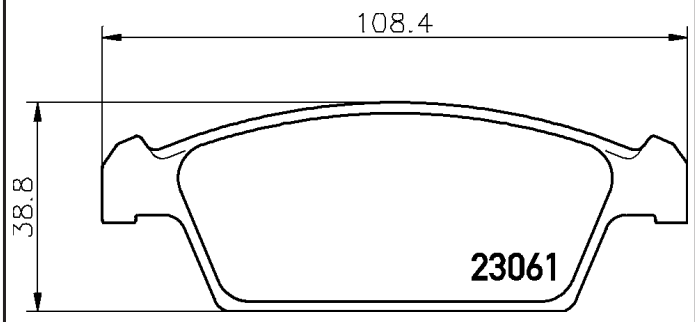

14

2306302

23063 173 0 5

CHEVROLET, HOLDEN, OPEL, VAUXHALL

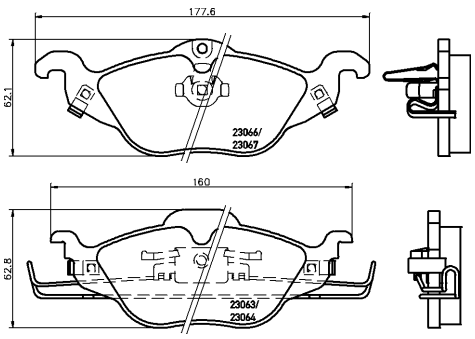

17.3

2307003

23070 165 1 4

MERCEDES-BENZ

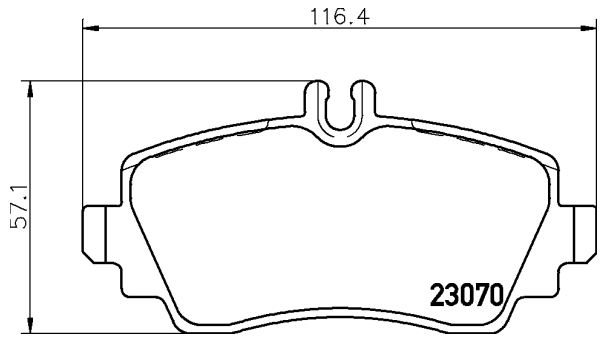

16.5

2307004

23070 165 2 4

MERCEDES-BENZ

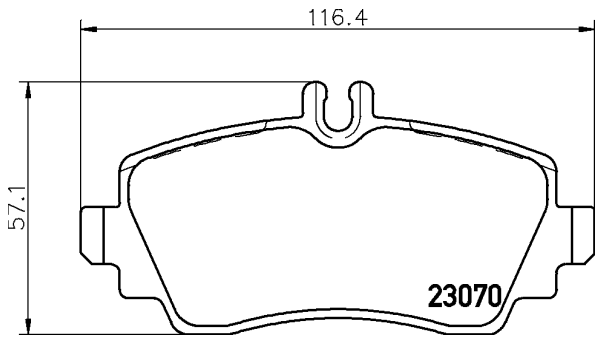

16.5

2307005

23070 190 2 4

MERCEDES-BENZ

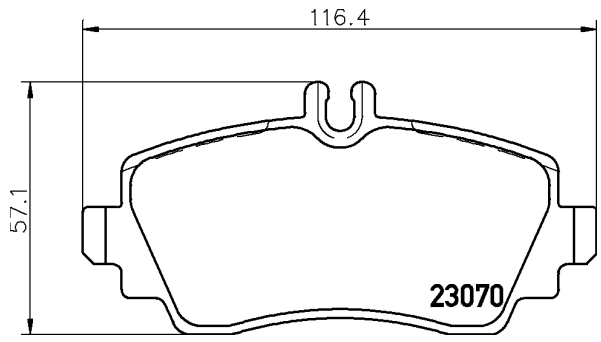

19

2307104

23071 185 1 5

FORD, FORD AUSTRALIA, FORD USA, MERCURY

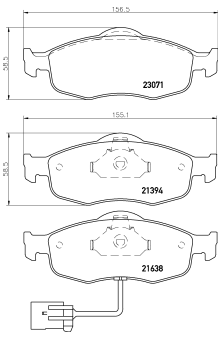

18.5

2307303

23073 189 0 5

VOLVO

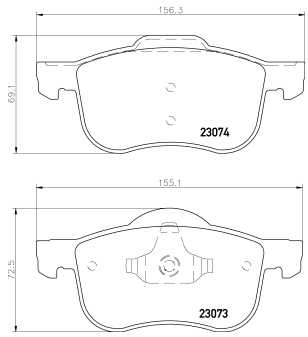

18.9

Illustrations

2307381

23073 189 0 5 epad

VOLVO

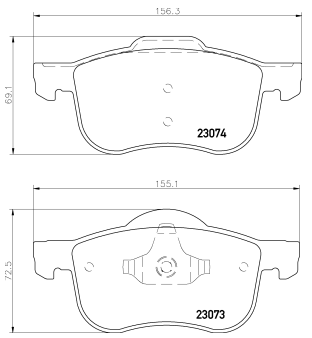

18.9

2307401

23074 189 0 5

VOLVO

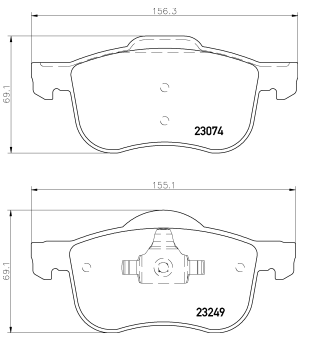

18.9

2307602

23076 175 0 5

VOLVO

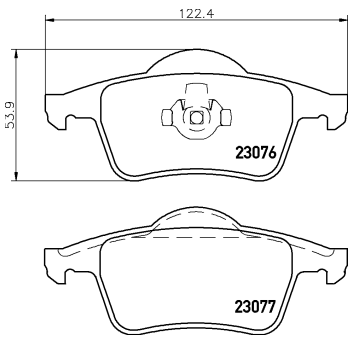

17.5

2307681

23076 175 0 5 epad

VOLVO

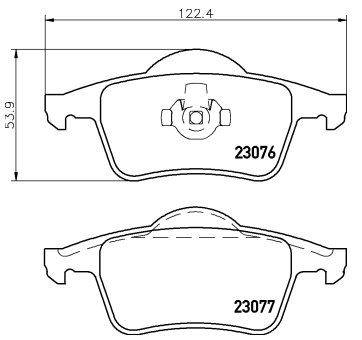

17.5

2307801

23078 159 0 4

MERCEDES-BENZ

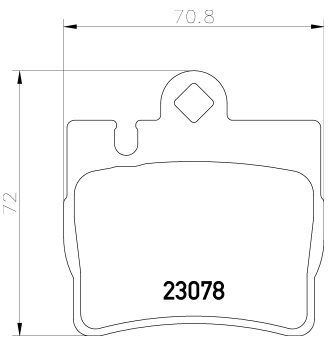

15.9

2307881

23078 159 0 4 epad

MERCEDES-BENZ

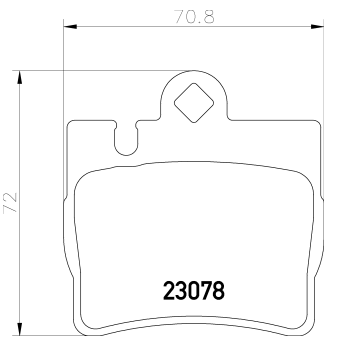

15.9

2308001

23080 151 1 4

MITSUBISHI

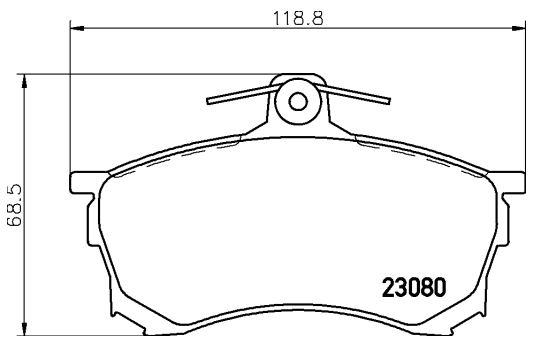

15.1

2308101

23081 190 0 5

HYUNDAI

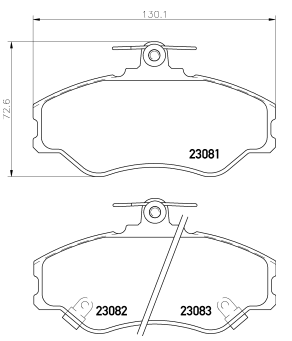

19

2308601

23086 170 0 5

NISSAN

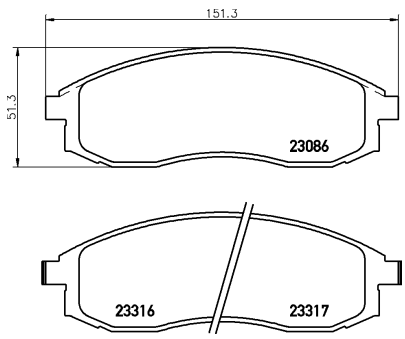

17

2308602

23086 160 0 5

MITSUBISHI

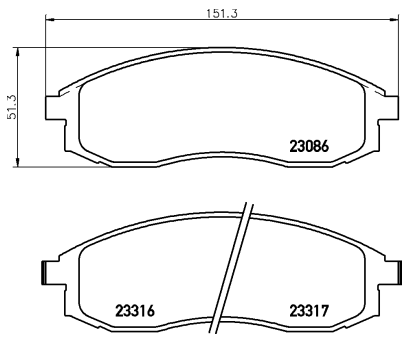

16

2308801

23088 176 0 5

TOYOTA

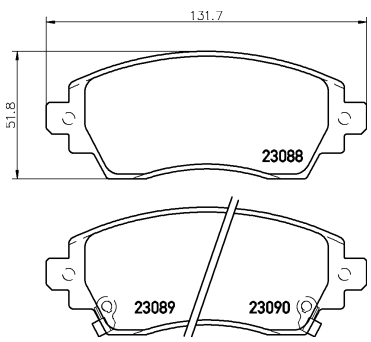

17.6

2309102

23091 152 1 4

SAAB

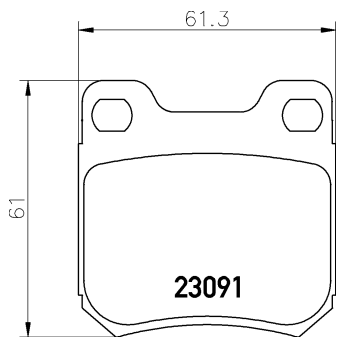

15.2

2309201

23092 160 0 5

ALFA ROMEO, LANCIA, VOLVO

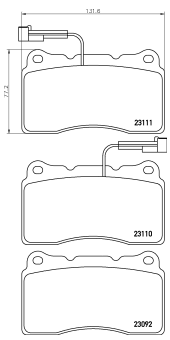

16

2309203

23092 160 0 4

MITSUBISHI, RENAULT

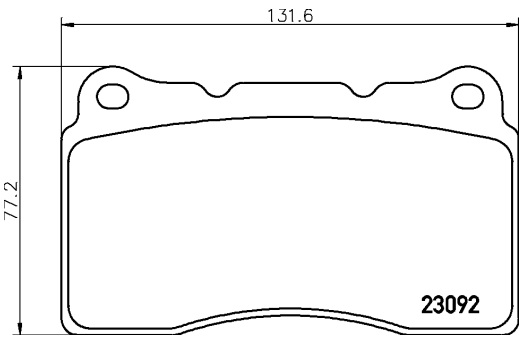

16

2309204

23092 150 0 5

HOLDEN, MITSUBISHI, SUBARU

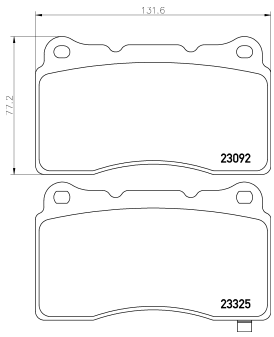

15

2309401

23094 170 0 5

HONDA, MG, NISSAN

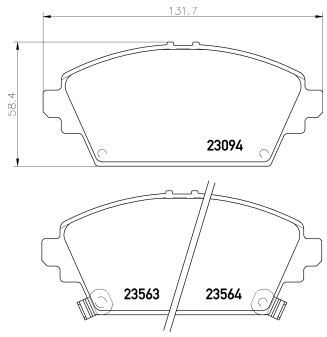

17

2309501

23095 170 0 4

NISSAN

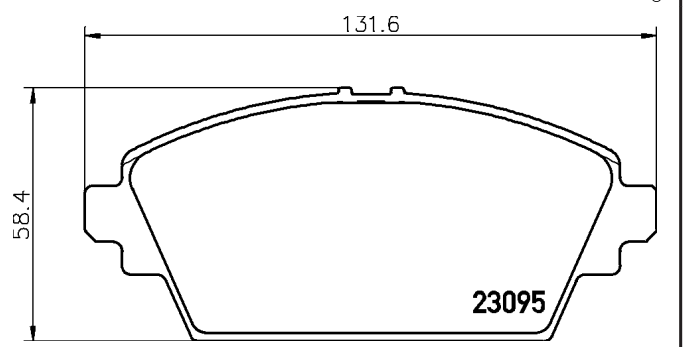

17

2309601

23096 172 0 5

HONDA

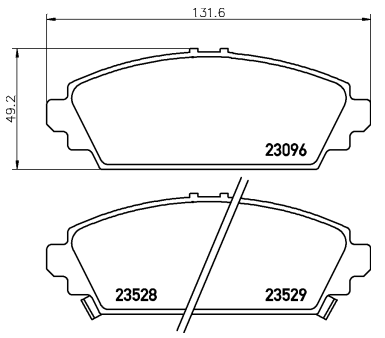

17.2

2309902

23099 184 1 4

NISSAN, OPEL, RENAULT, VAUXHALL

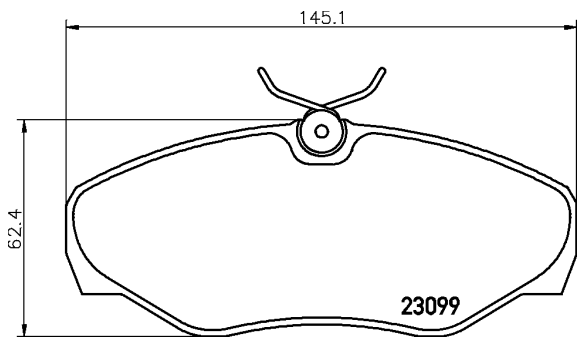

18.4

2309903

23099 184 0 5

RENAULT

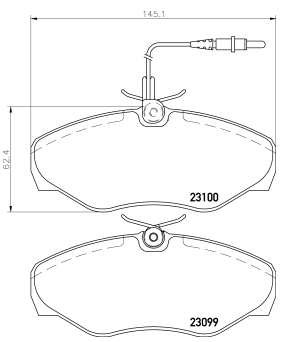

18.4

2310101

23101 175 0 5

FORD, FORD AUSTRALIA, MAZDA

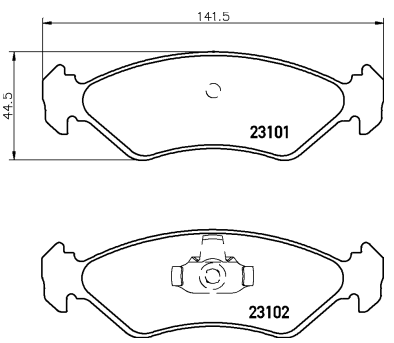

17.5

2310301

23103 175 0 5

FORD, MAZDA, TVR

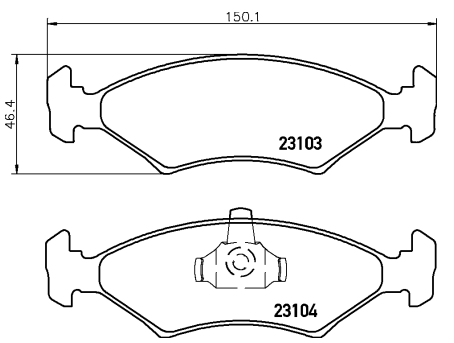

17.5

2310601

23106 189 0 5

VOLVO

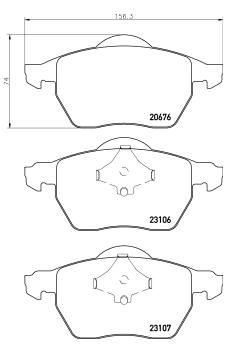

18.9

2311203

23112 191 0 5

MG, ROEWE (SAIC), ROVER

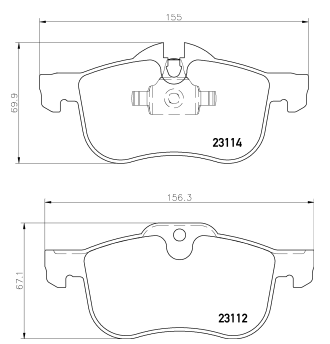

19.1

2311502

23115 196 0 5

HOLDEN, OPEL, SAAB, VAUXHALL

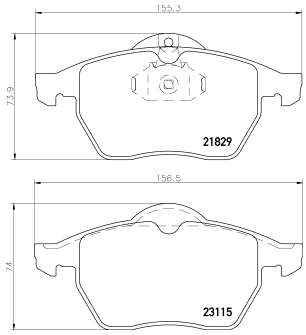

19.6

2311701

23117 202 0 5

HOLDEN, OPEL, SAAB, VAUXHALL

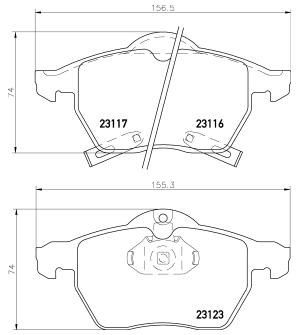

20.2

2311901

23119 185 0 5

AUDI

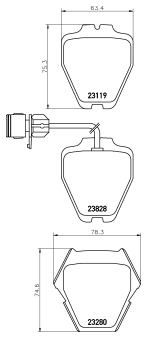

18.5

2312401

23124 193 1 5

CITROËN, PEUGEOT

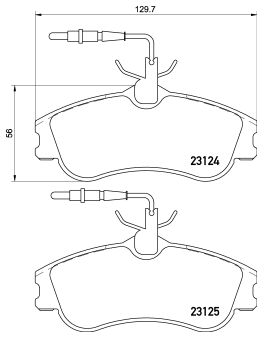

19.3

2312601

23126 175 0 5

DAIMLER, JAGUAR

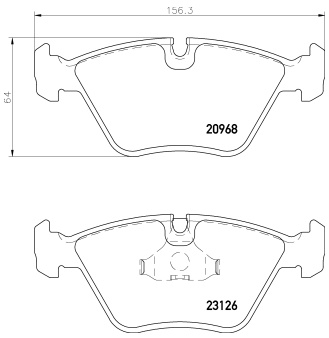

17.5

2313001

23130 197 0 5

AUDI, SEAT, SKODA, SKODA (SVW), VOLKSWAGEN

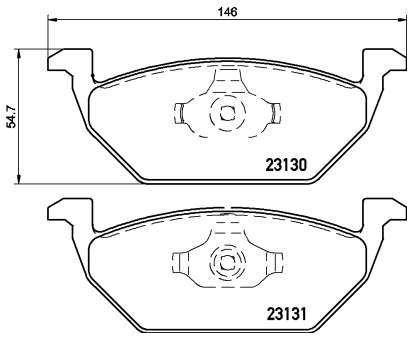

19.7

2313081

23130 197 0 5 epad

AUDI, SEAT, SKODA, SKODA (SVW), VOLKSWAGEN

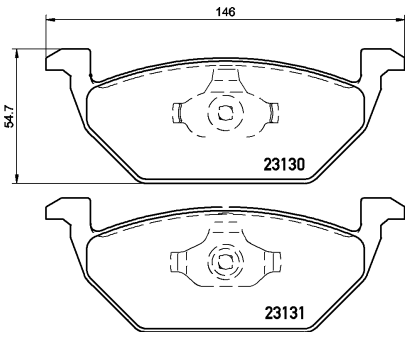

19.7

2313101

23131 197 0 5

AUDI, SEAT, SKODA, SKODA (SVW), VOLKSWAGEN

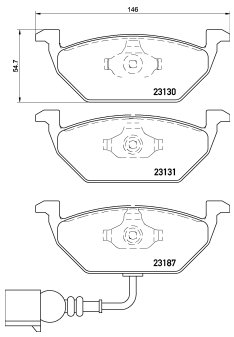

19.7

Illustrations

2313181

23131 197 0 5 epad

AUDI, SEAT, SKODA, SKODA (SVW), VOLKSWAGEN

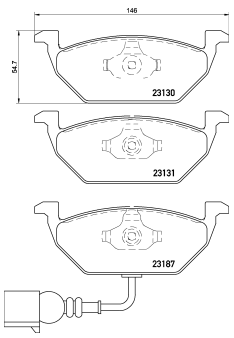

19.7

2313503

23135 180 1 5

CITROËN

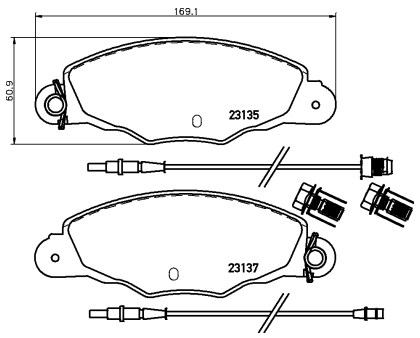

18

2313803

23138 146 1 4

MERCEDES-BENZ

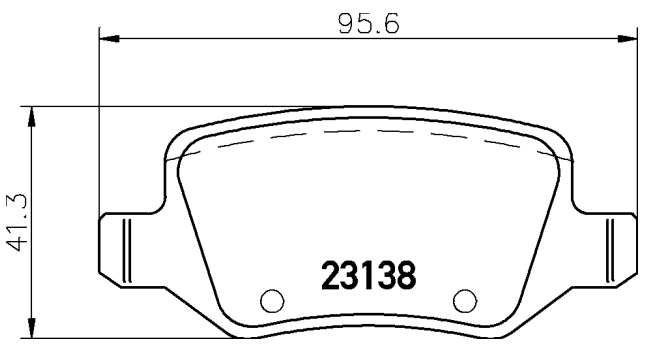

14.6

2313805

23138 146 2 4

MERCEDES-BENZ

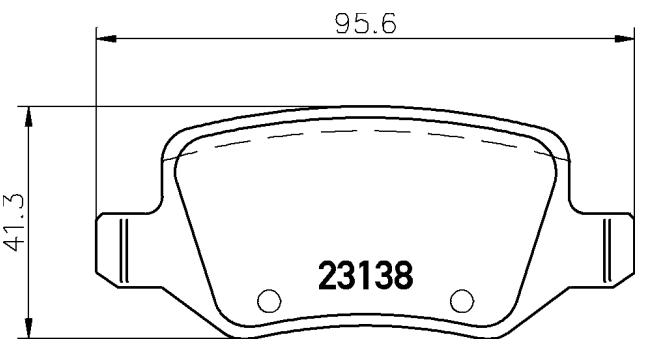

14.6

2313901

23139 170 0 4

PORSCHE

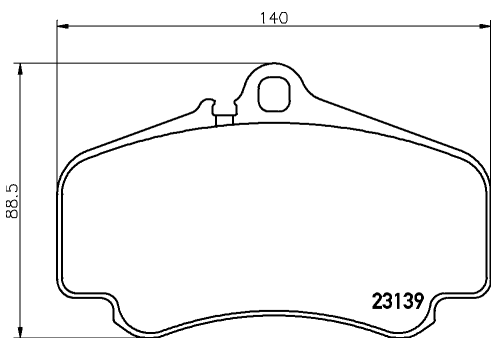

17

2314002

23140 193 0 5

ALFA ROMEO, LANCIA

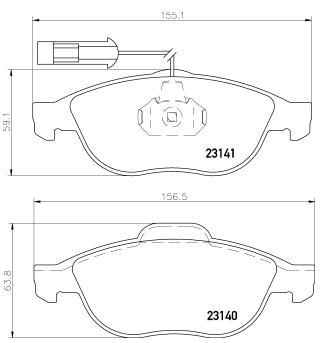

19.3

2314101

23141 193 0 5

ALFA ROMEO, LANCIA

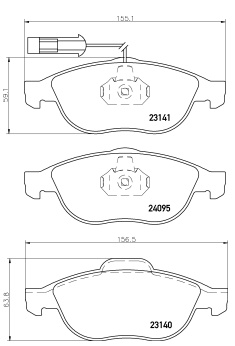

19.3

2314201

23142 143 0 5

NISSAN

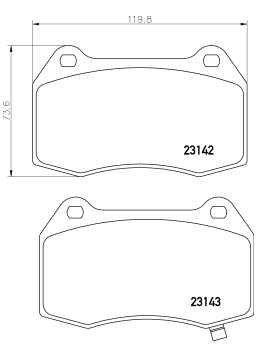

14.3

2314301

23143 143 0 4

CADILLAC, CHEVROLET, DODGE

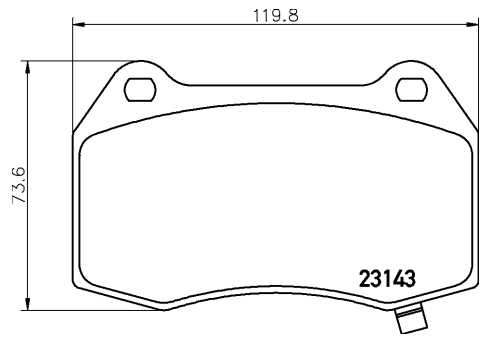

14.3

2314401

23144 198 1 5

MERCEDES-BENZ

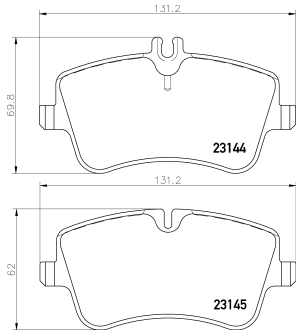

19.8

2314402

23144 198 2 5

MERCEDES-BENZ

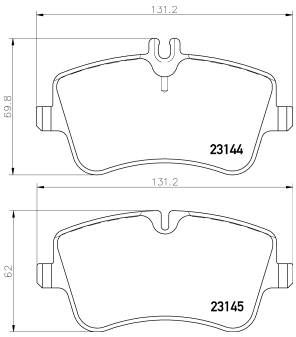

19.8

2314481

23144 198 1 5 epad

MERCEDES-BENZ

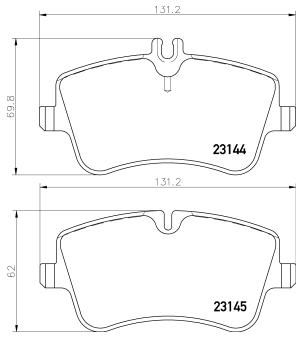

19.8

2314482

23144 198 2 5 epad

MERCEDES-BENZ

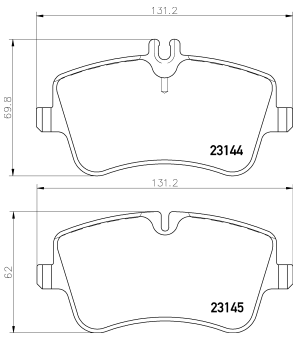

19.8

2314601

23146 170 1 4

CITROËN

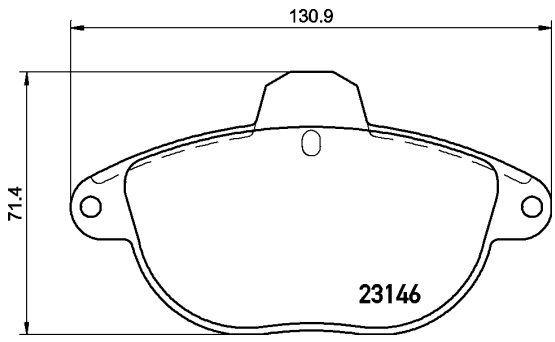

17

2315402

23154 193 0 5

FORD, FORD AUSTRALIA

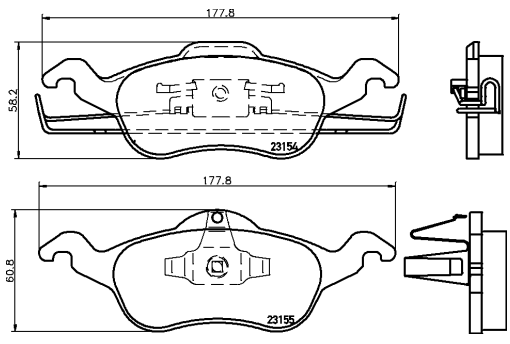

19.3

2315702

23157 160 0 4

MASERATI, MERCEDES-BENZ

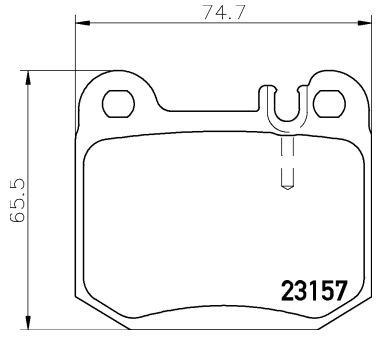

16

2315781

23157 160 0 4 epad

MASERATI, MERCEDES-BENZ

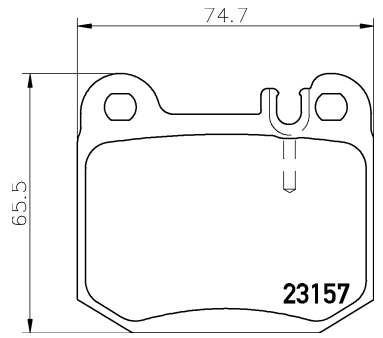

16

2316001

23160 173 0 5

NISSAN

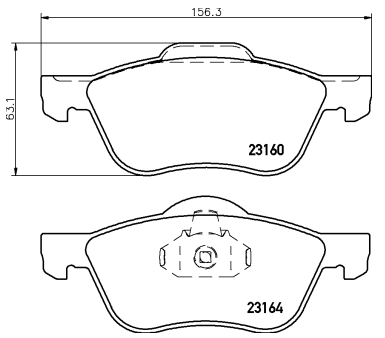

17.3

2316803

23168 193 2 5

ALFA ROMEO, FIAT, LANCIA

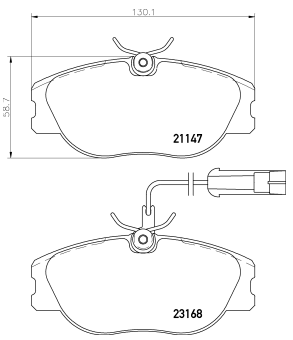

19.3

2316901

23169 194 1 5

PEUGEOT

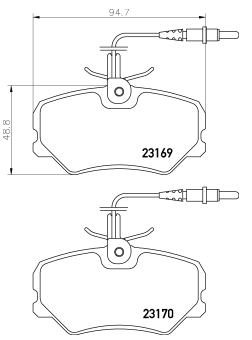

19.4

2317203

23172 183 1 4

RENAULT

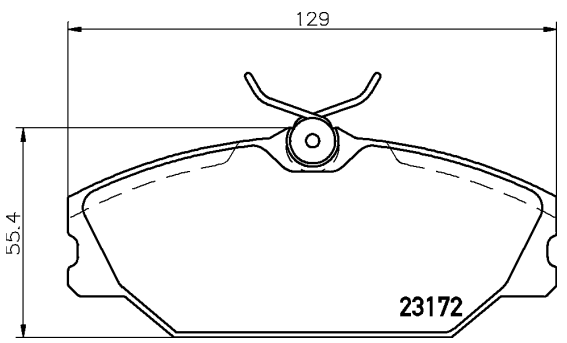

18.3

2317602

23176 182 1 5

VOLKSWAGEN

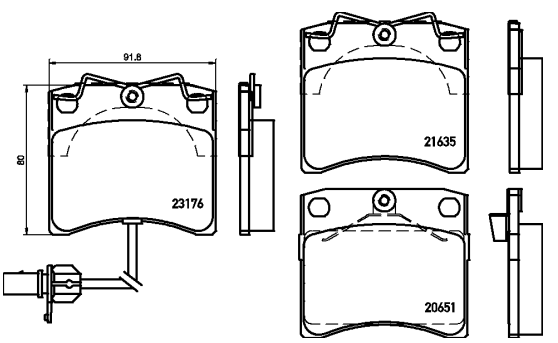

18.2

2317703

23177 144 1 4

ALFA ROMEO, FIAT, LANCIA

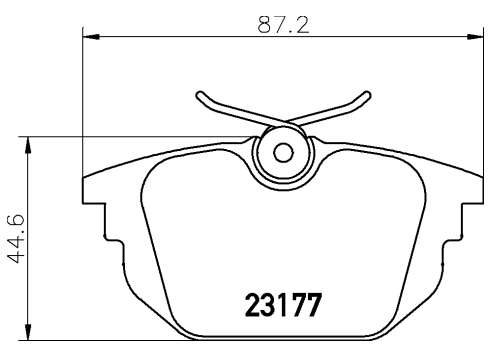

14.4

2317801

23178 160 0 5

HONDA

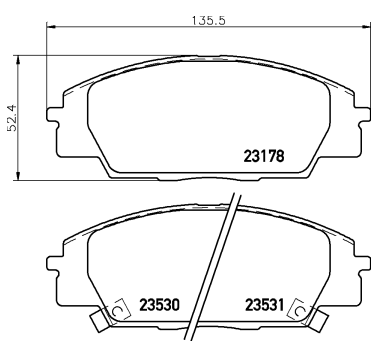

16

2318101

23181 179 0 5

FIAT, LANCIA

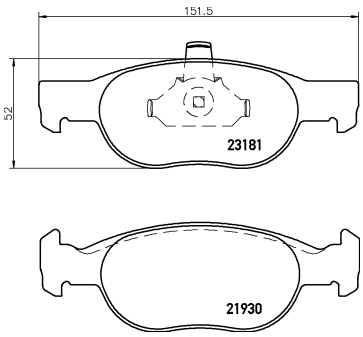

17.9

2318302

23183 203 0 5

BMW, MG, ROVER, WIESMANN

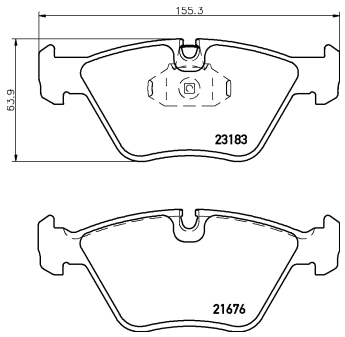

20.3

2318381

23183 203 0 5 epad

BMW, MG, ROVER

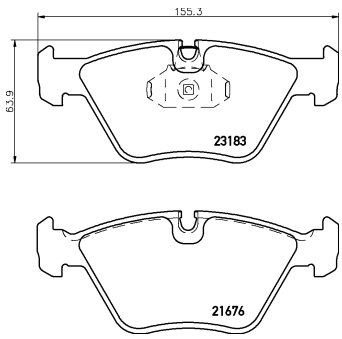

20.3

2318401

23184 145 0 5

INFINITI, NISSAN

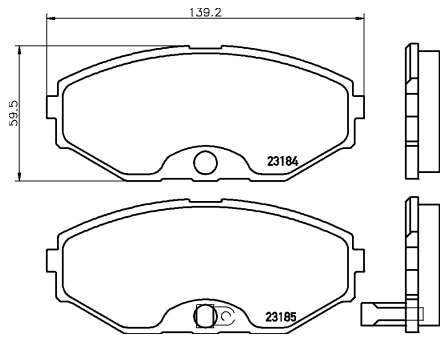

14.5

2318902

23189 167 1 5

MERCEDES-BENZ

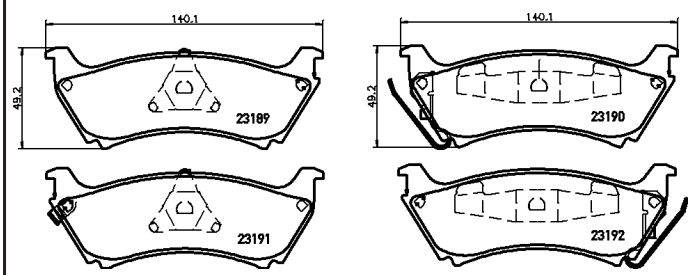

16.7

2319002

23190 167 1 5

MERCEDES-BENZ

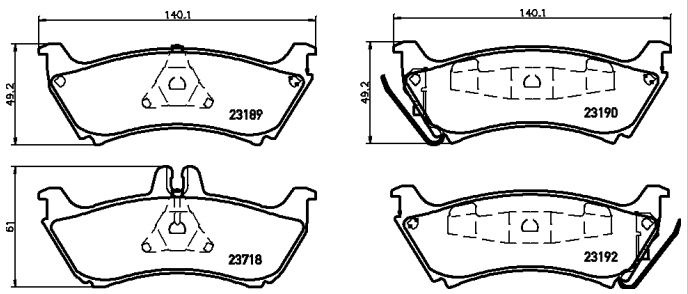

16.7

2319303

23193 163 1 5

MERCEDES-BENZ

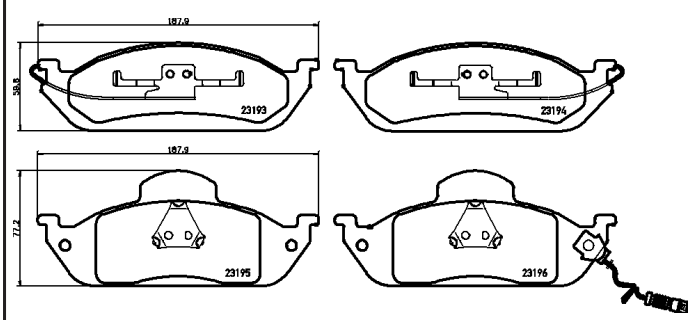

16.3

2320001

23200 188 0 5

FORD, FORD AUSTRALIA, MAZDA

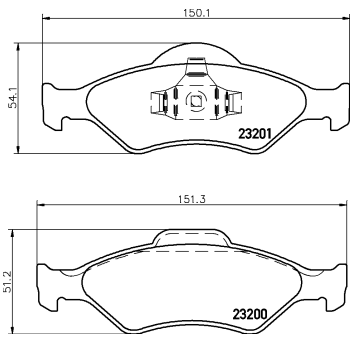

18.8

2321502

23215 183 1 5

RENAULT

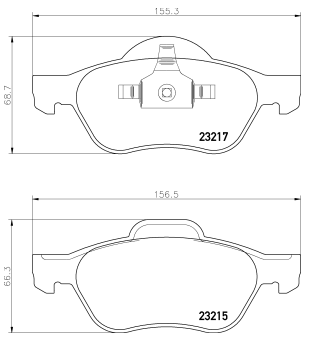

18.3

2321801

23218 180 0 5

FIAT

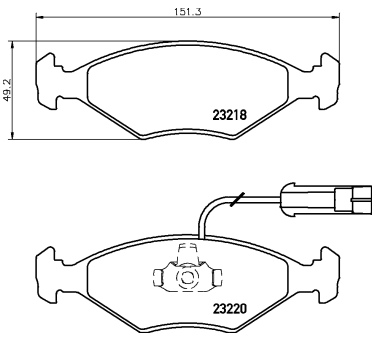

18

2321901

23219 180 0 5

FIAT

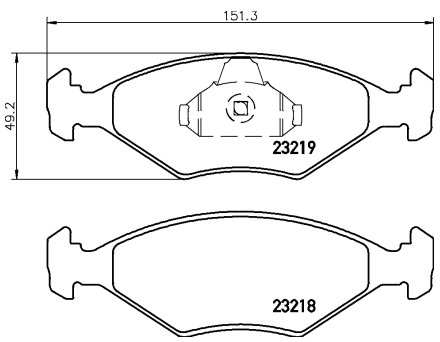

18

2322201

23222 190 0 5

ALFA ROMEO, FIAT

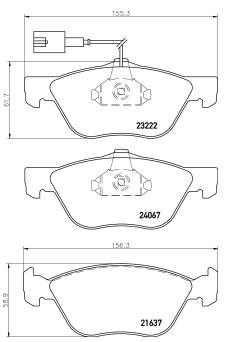

19

2322416

23224 173 1 5

VOLKSWAGEN

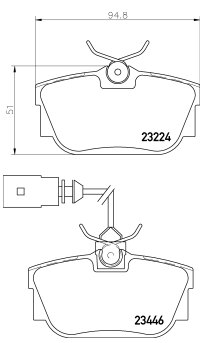

17.3

2322501

23225 170 1 5

CHEVROLET, HOLDEN, OPEL, VAUXHALL

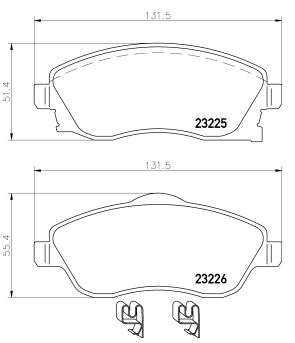

17

2322702

23227 180 0 5

FIAT

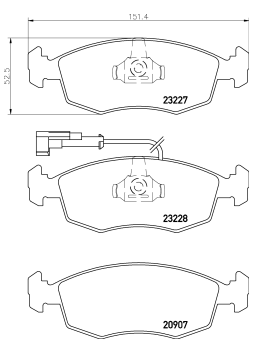

18

2322901

23229 180 0 5

LANCIA

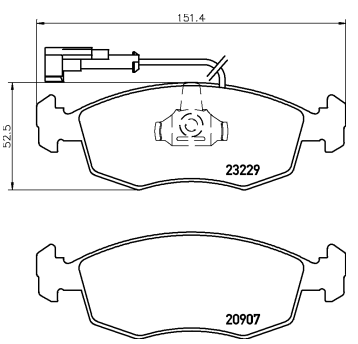

18

2323001

23230 158 0 5

DAEWOO, SSANGYONG

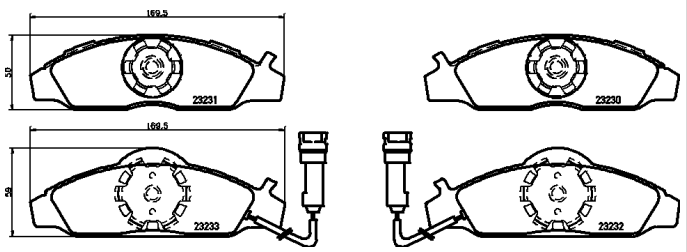

15.8

2323101

23231 158 0 5

DAEWOO, SSANGYONG

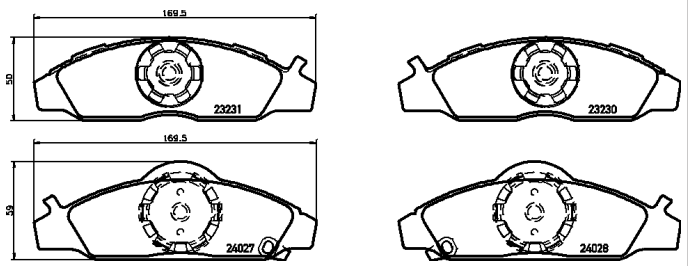

15.8

2323401

23234 169 0 5

BUICK, CHEVROLET, DAEWOO, HOLDEN

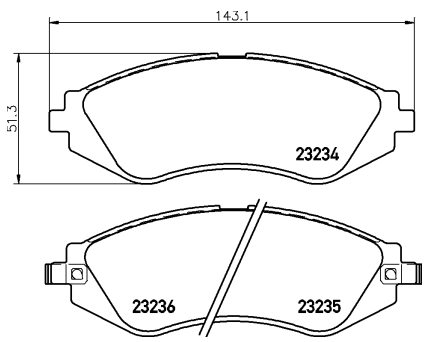

16.9

2323701

23237 145 1 4

CHEVROLET, DAEWOO, MITSUBISHI, SSANGYONG

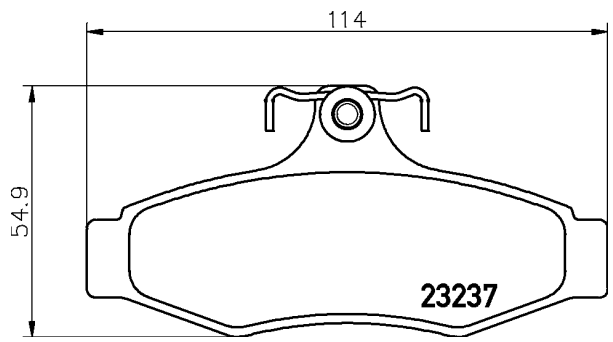

14.5

2323802

23238 160 0 5

HYUNDAI

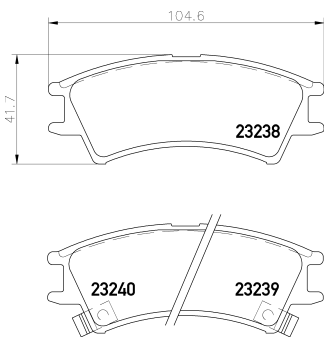

16

2324102

23241 165 0 4

CHEVROLET, DAEWOO, PONTIAC

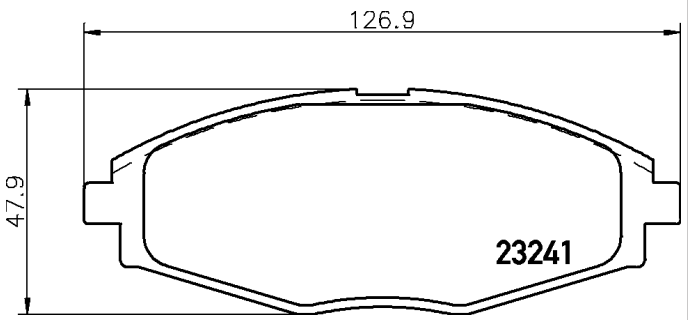

16.5

2324201

23242 142 1 5

DAEWOO, SSANGYONG

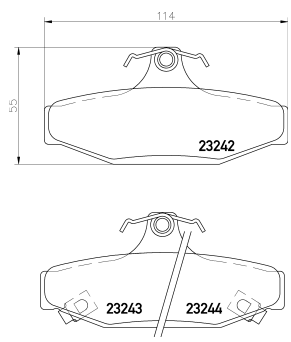

14.2

2324204

23242 142 1 4

FORD AUSTRALIA, HOLDEN

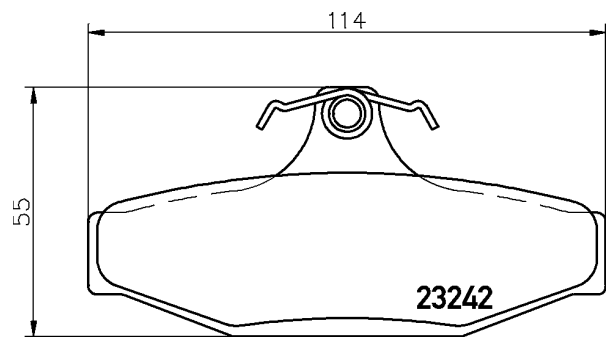

14.2

2324502

23245 183 1 5

RENAULT

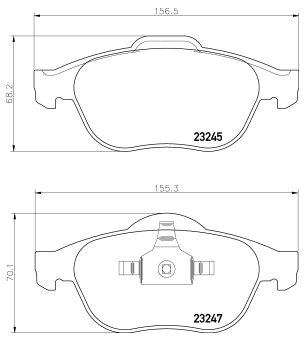

18.3

2324802

23248 183 1 5

RENAULT

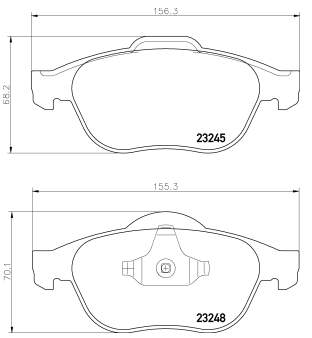

18.3

2325001

23250 165 0 5

HOLDEN, OPEL, VAUXHALL

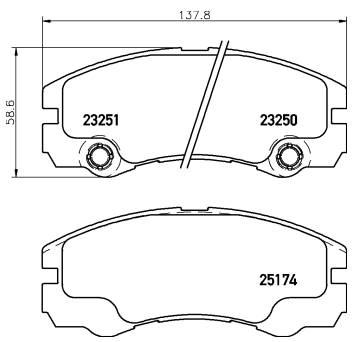

16.5

2325803

23258 169 2 5

CHEVROLET, HOLDEN, OPEL, VAUXHALL

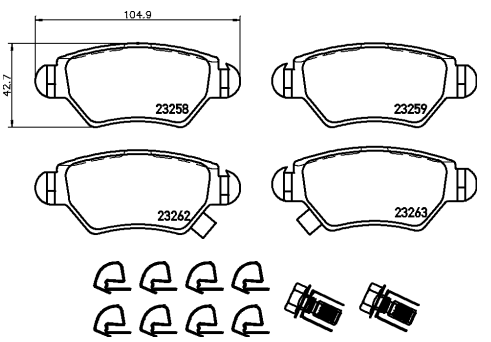

16.9

2326903

23269 201 0 5

FORD, SEAT, VOLKSWAGEN

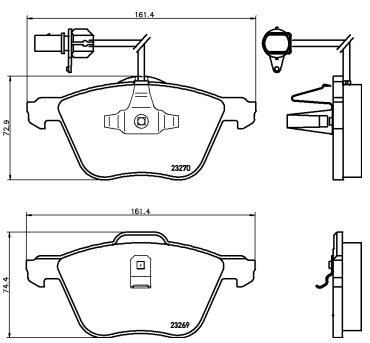

20.1

2327102

23271 177 0 5

MERCEDES-BENZ

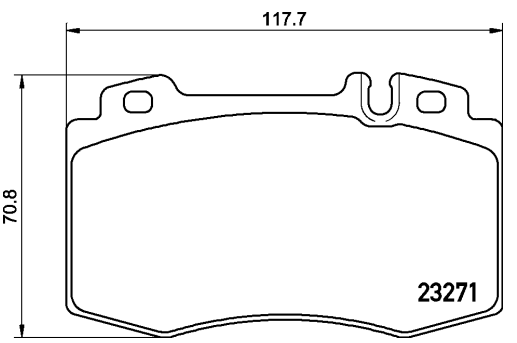

17.7

2327105

23271 177 0 8

MERCEDES-BENZ

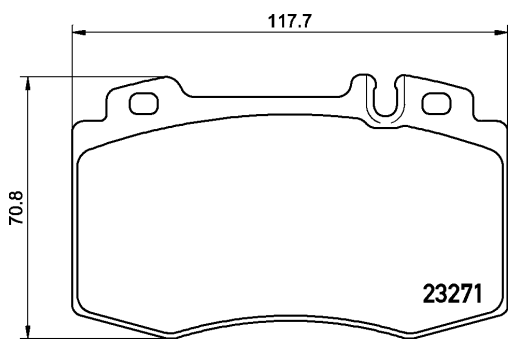

17.7

2327181

23271 177 0 5 epad

MERCEDES-BENZ

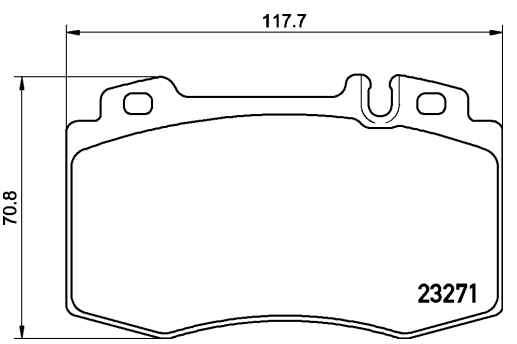

17.7

2327301

23273 180 1 4

CITROËN

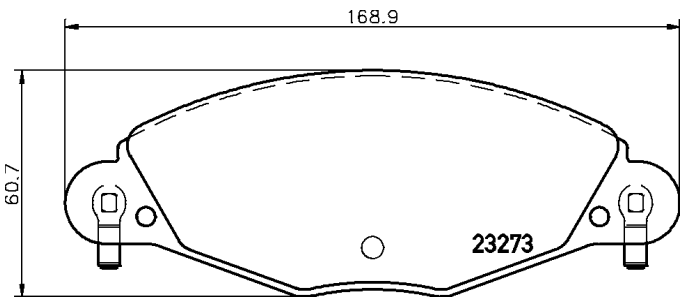

18

2327601

23276 175 1 4

CITROËN

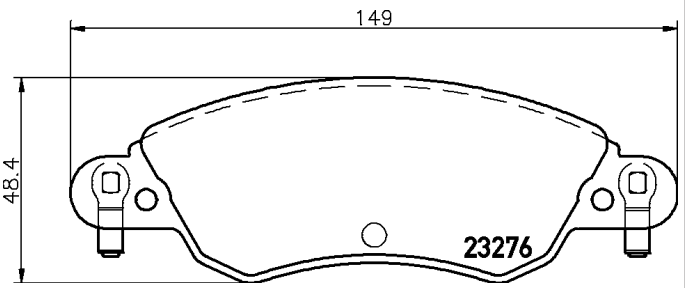

17.5

2327701

23277 177 1 4

CITROËN

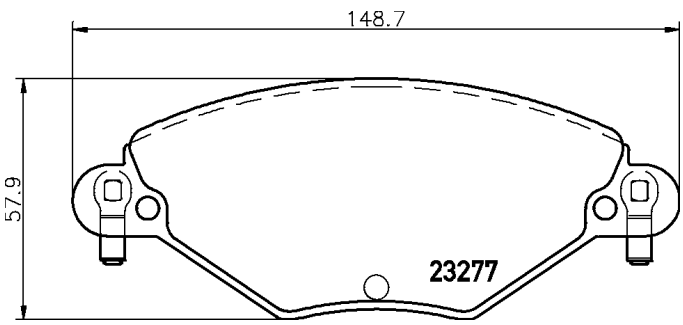

17.7

2327904

23279 184 1 4

FORD, FORD (CHANGAN), FORD AUSTRALIA, JAGUAR

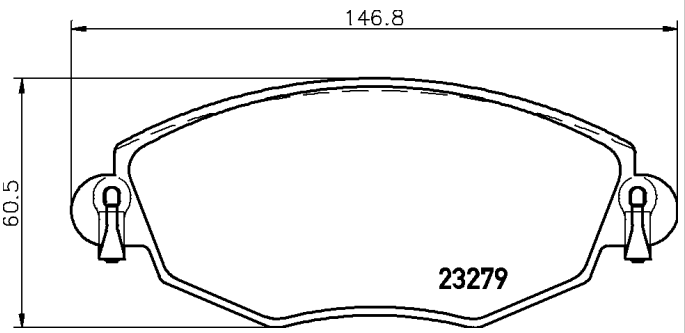

18.4

2328001

23280 183 0 5

AUDI, VOLKSWAGEN

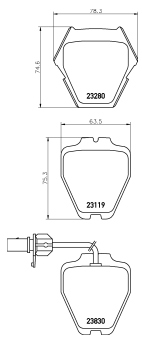

18.3

2328101

23281 183 0 5

MINI

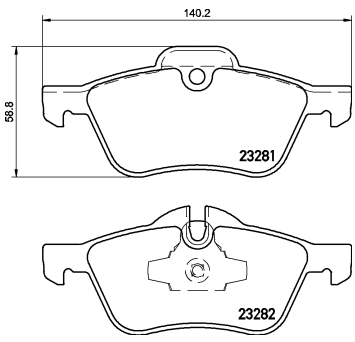

18.3

2328181

23281 183 0 5 epad

MINI

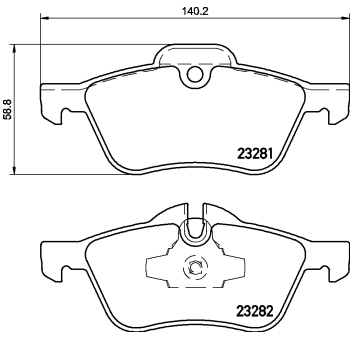

18.3

2328404

23284 140 1 4

HOLDEN, OPEL, VAUXHALL

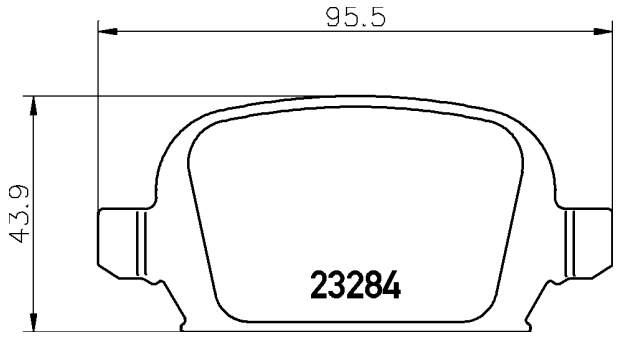

14

2328501

23285 173 0 4

MERCEDES-BENZ

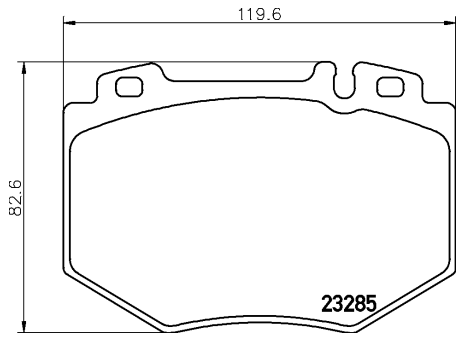

17.3

2328702

23287 178 0 5

BMW, BMW (BRILLIANCE), WIESMANN

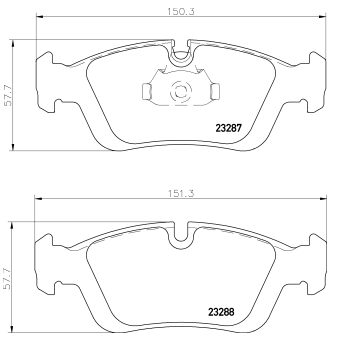

17.8

2328781

23287 178 0 5 epad

BMW, BMW (BRILLIANCE), WIESMANN

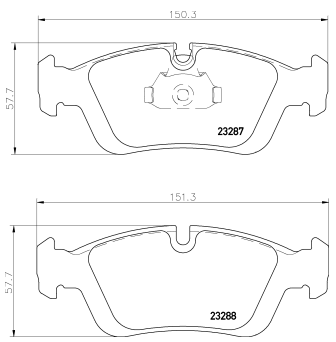

17.8

2328902

23289 190 0 5

ALFA ROMEO, FIAT, LANCIA

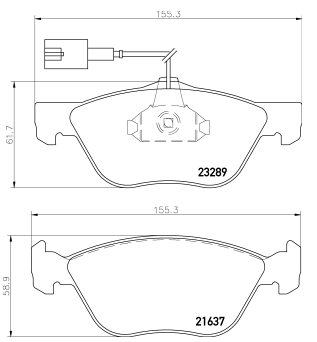

19

2329002

23290 155 1 4

CHANGFENG, FENGXING (DONGFENG), MITSUBISHI, MITSUBISHI (BJC)

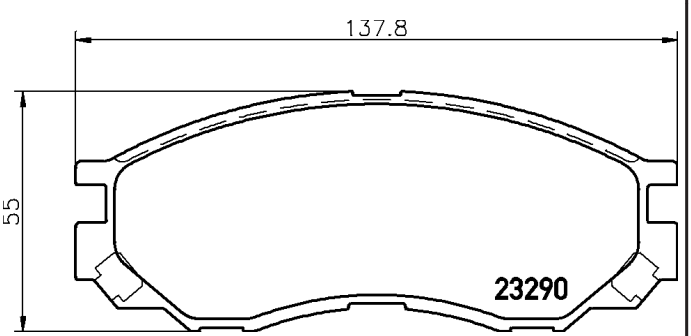

15.5

2329301

23293 182 0 5

DAIMLER, JAGUAR

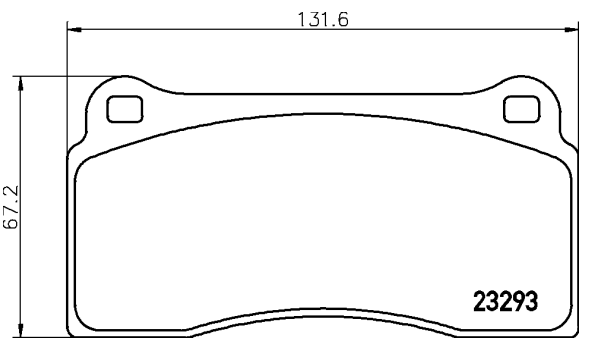

18.2

2329402

23294 165 0 4

TOYOTA

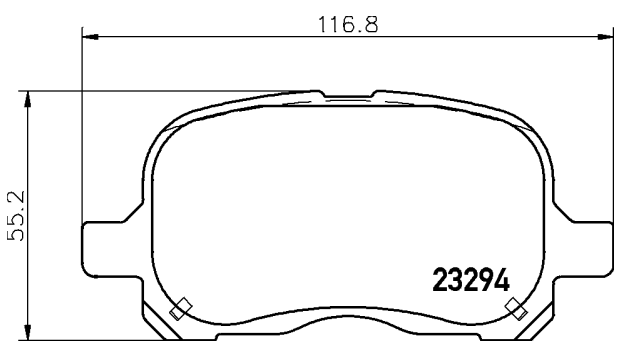

16.5

2329601

23296 150 0 5

SUBARU, SUZUKI

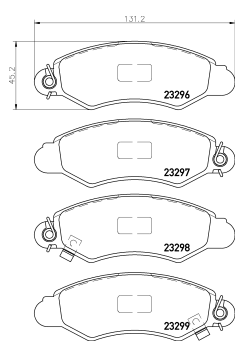

15

2330002

23300 180 0 5

FORD

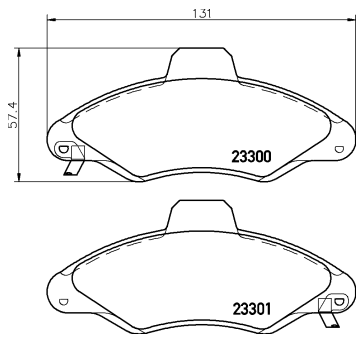

18

2330201

23302 175 0 4

OPEL, RENAULT, VAUXHALL

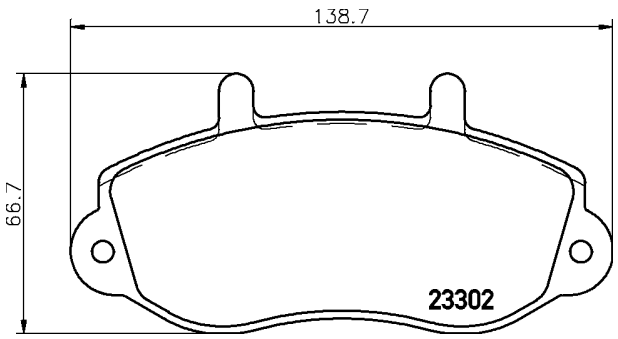

17.5

2330301

23303 152 0 5

FORD ASIA / OZEANIA, SUZUKI

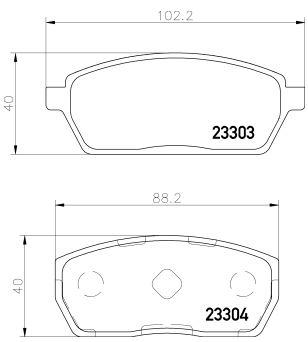

15.2

2330501

23305 154 0 4

CITROËN

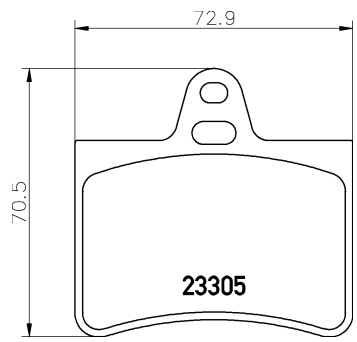

15.4

2330902

23309 173 0 5

BENTLEY

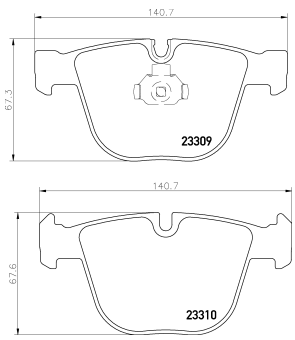

17.3

2331207

23312 203 0 5 T4165

BMW

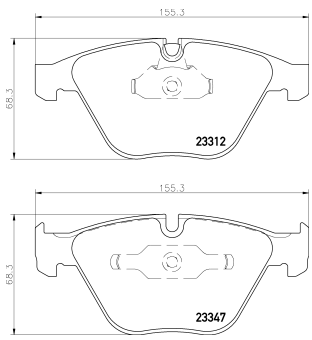

20.3

2331211

23312 203 9 5 T4165

BMW, BMW (BRILLIANCE)

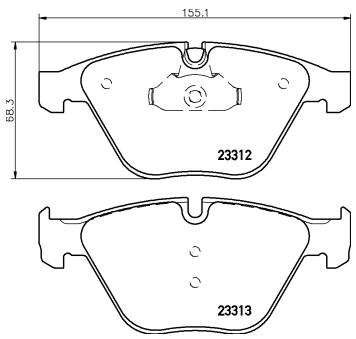

20.3

2331281

23312 203 0 5 epad

BMW

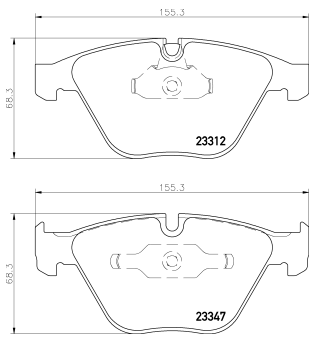

20.3

Illustrations

2331282

23312 203 9 5 epad

BMW, BMW (BRILLIANCE)

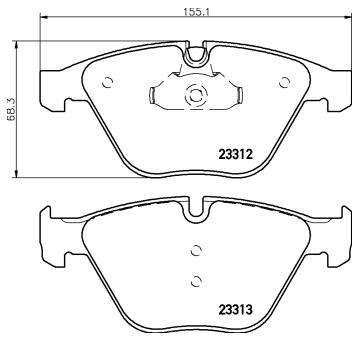

20.3

2331301

23313 203 0 5

BMW, BMW (BRILLIANCE)

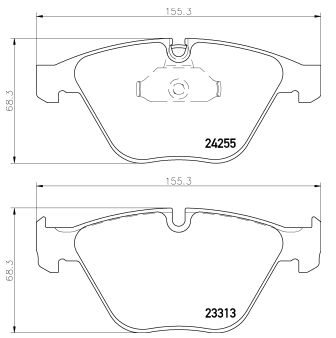

20.3

2331303

23313 203 9 5

BMW

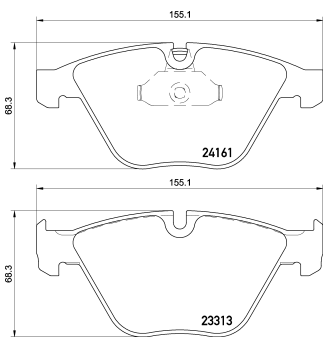

20.3

2331381

23313 203 0 5 epad

BMW, BMW (BRILLIANCE)

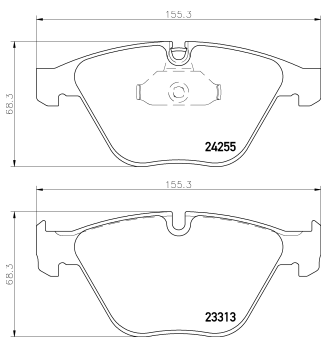

20.3

2331382

23313 203 9 5 epad

BMW

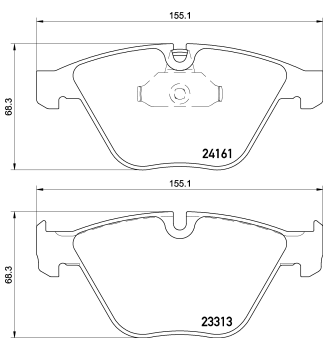

20.3

2331401

23314 145 1 4

SUZUKI

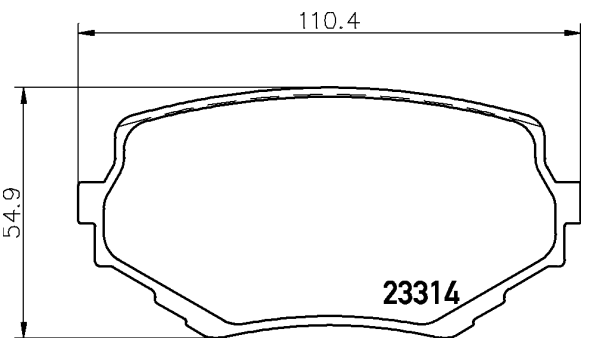

14.5

2331801

23318 159 0 5

CHRYSLER, DODGE

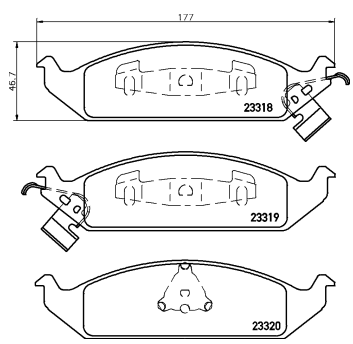

15.9

2332501

23325 150 0 4

CADILLAC, FORD

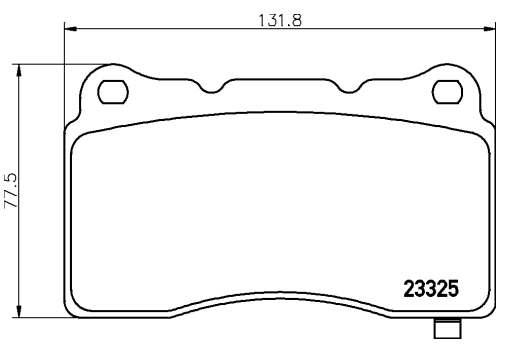

15

2332502

23325 160 0 4

CADILLAC, CHEVROLET, OPEL, VAUXHALL

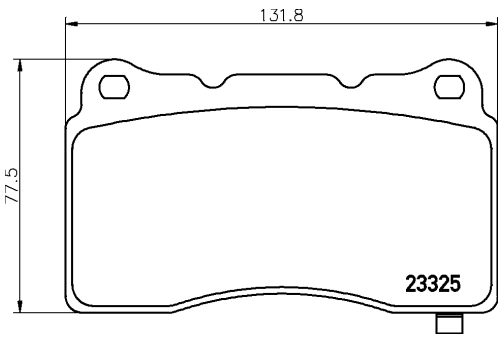

16

2332601

23326 177 1 4

AUDI, AUDI (FAW), VOLKSWAGEN

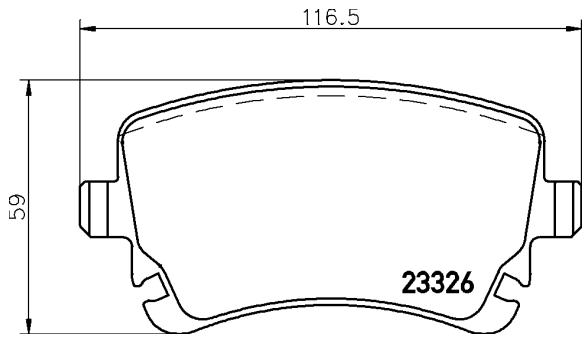

17.7

2332602

23326 177 2 4

VOLKSWAGEN

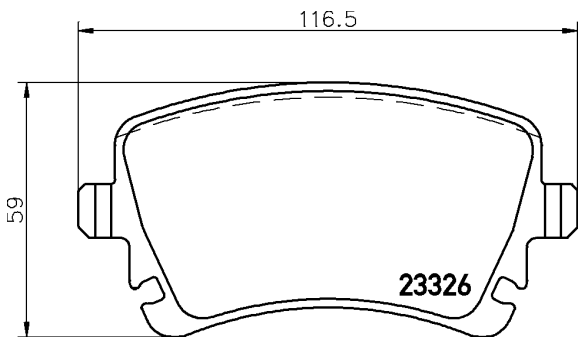

17.7

2332603

23326 177 3 4

VOLKSWAGEN

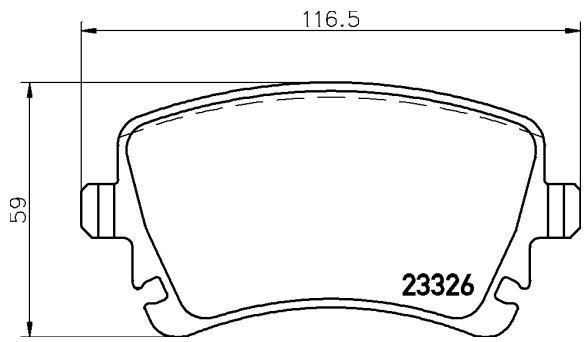

17.7

2332607

23326 177 4 4

AUDI, BENTLEY

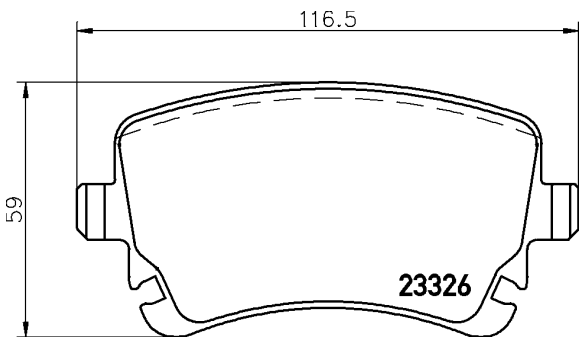

17.7

2332681

23326 177 1 4 epad

AUDI, AUDI (FAW), VOLKSWAGEN

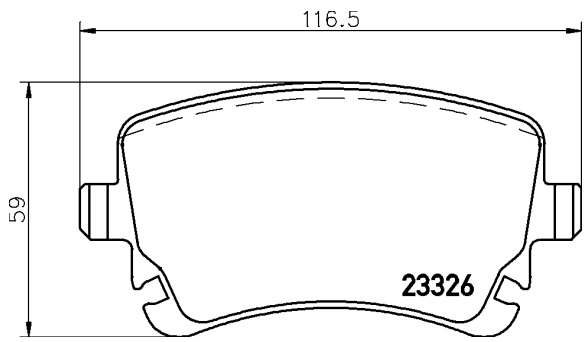

17.7

2332902

23329 170 0 4

PORSCHE

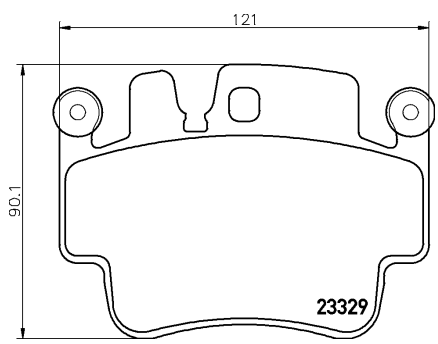

17

2333102

23331 160 0 4

LEXUS

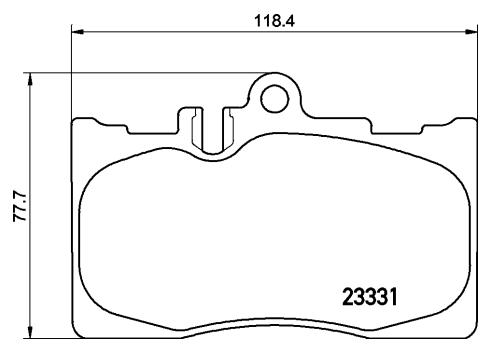

16

2333201

23332 180 1 5

CITROËN, PEUGEOT

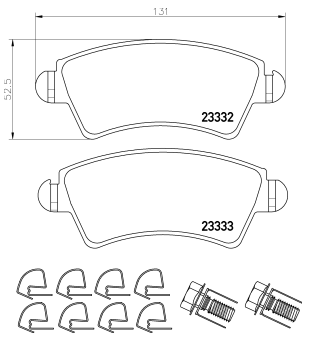

18

2333403

23334 168 0 5

MERCEDES-BENZ, MERCEDES-BENZ (BBDC)

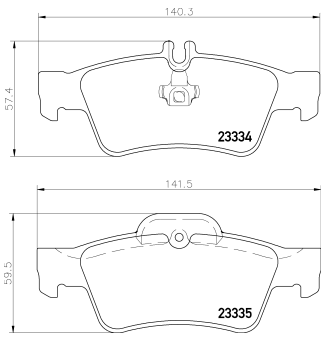

16.8

2333481

23334 168 0 5 epad

MERCEDES-BENZ, MERCEDES-BENZ (BBDC)

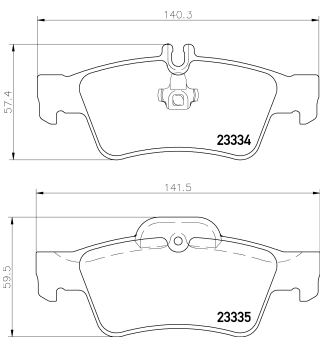

16.8

2333901

23339 171 0 5

JEEP, JEEP (BJC)

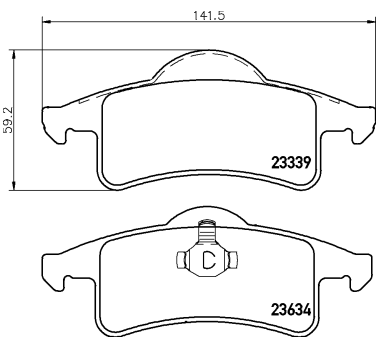

17.1

2334001

23340 168 1 5

TOYOTA

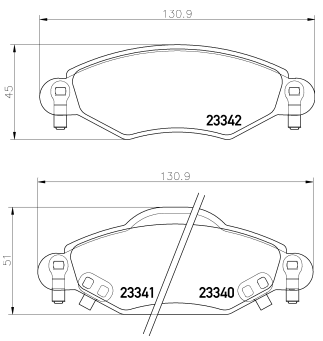

16.8

2334602

23346 193 1 4

CITROËN, CITROËN (DF-PSA), PEUGEOT

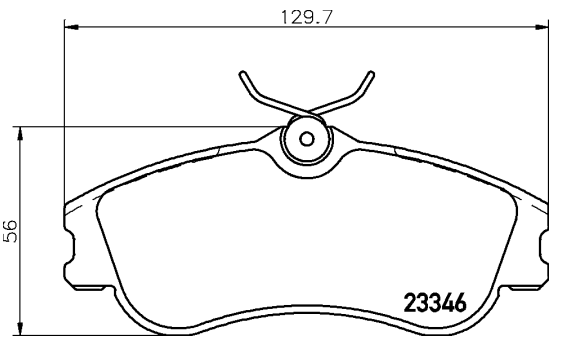

19.3

2334803

23348 165 0 5

TOYOTA

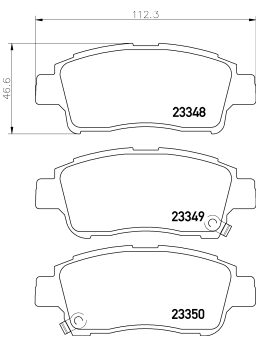

16.5

2334901

23349 165 0 5

TOYOTA

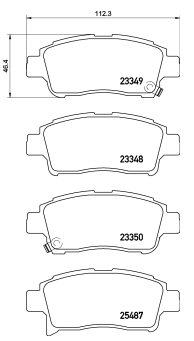

16.5

Illustrations

2335301

23353 140 1 4

FORD, FORD AUSTRALIA

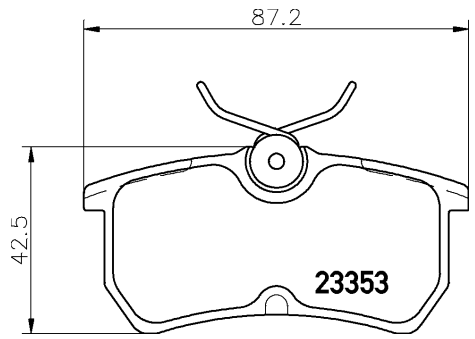

14

2335404

23354 136 1 4

MAZDA

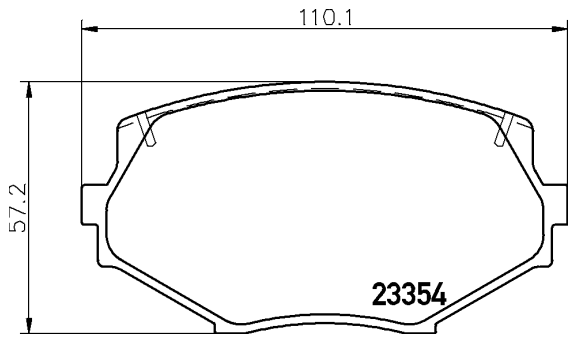

14

2335501

23355 150 0 5

ACURA, HONDA

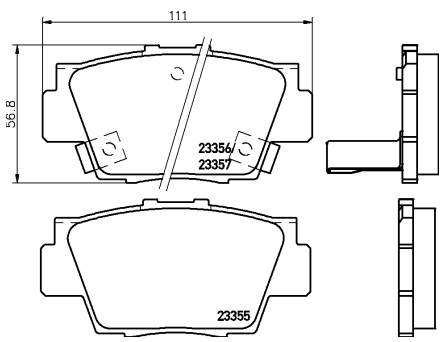

15

2335801

23358 180 0 5

BUICK, CHEVROLET, MEGA, OPEL, PONTIAC, VAUXHALL

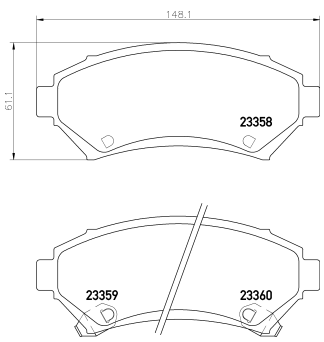

18

2336101

23361 150 0 5

BUICK, CHEVROLET, MEGA, OPEL, PONTIAC, VAUXHALL

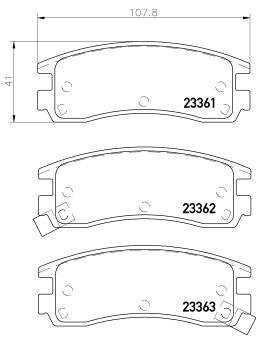

15

2336701

23367 150 0 5

INFINITI

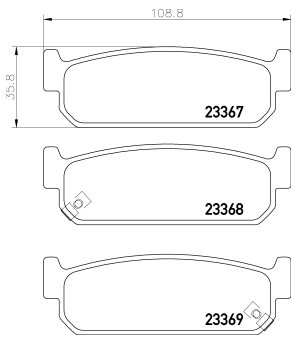

15

2337001

23370 150 0 5

LDV

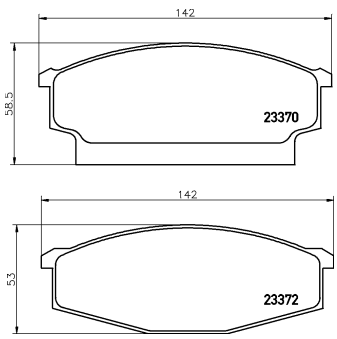

15

2337301

23373 150 0 5

DONGNAN (SOUEAST), MITSUBISHI

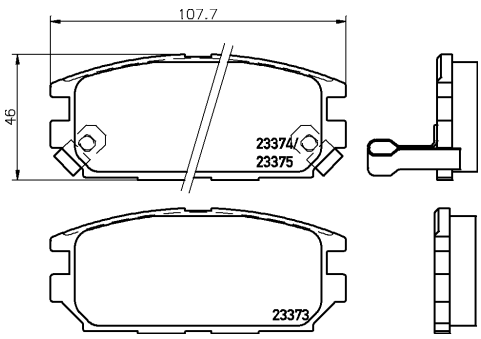

15

2338101

23381 155 0 5

SUBARU

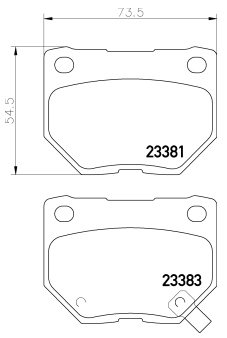

15.5

2338102

23381 170 0 5

SUBARU

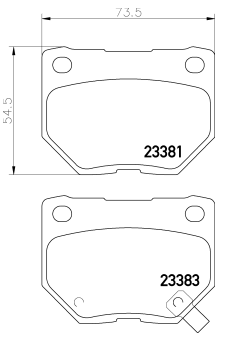

17

2338401

23384 180 0 5

KIA

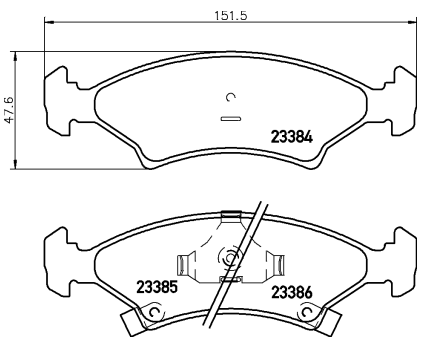

18

2338704

23387 133 1 5

MAZDA

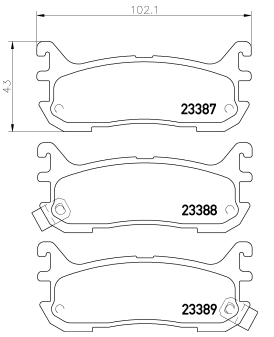

13.3

2339201

23392 206 0 5

AUDI, SEAT, SKODA, VOLKSWAGEN

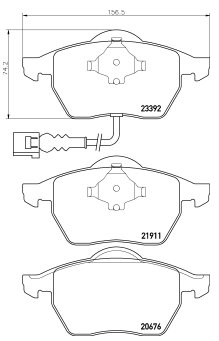

20.6

2339402

23394 145 0 5

VOLKSWAGEN

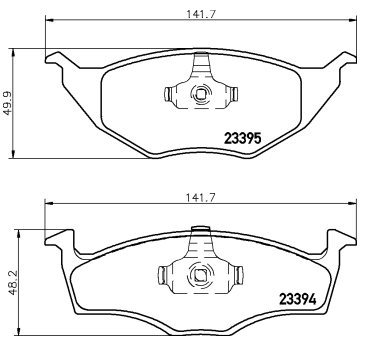

14.5

2339502

23395 145 0 5

AUDI

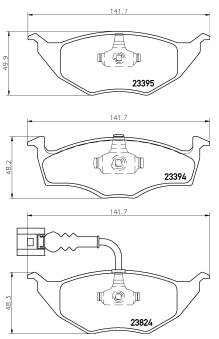

14.5

2339602

23396 180 1 4

CITROËN, PEUGEOT

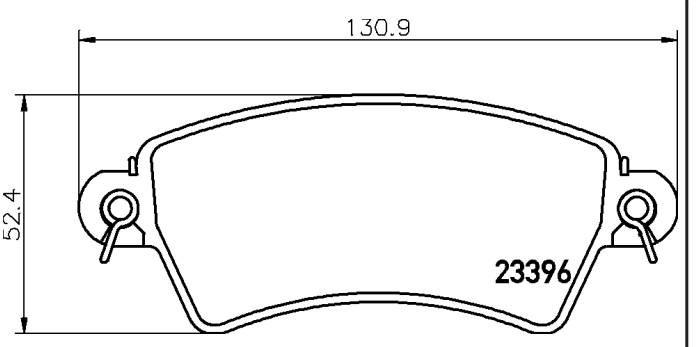

18

2339703

23397 194 0 5

LAND ROVER

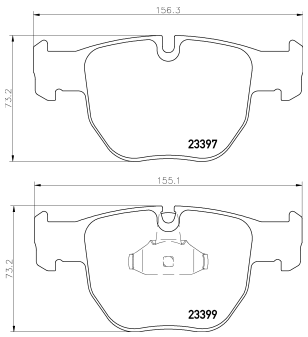

19.4

2340001

23400 165 1 4

SUZUKI

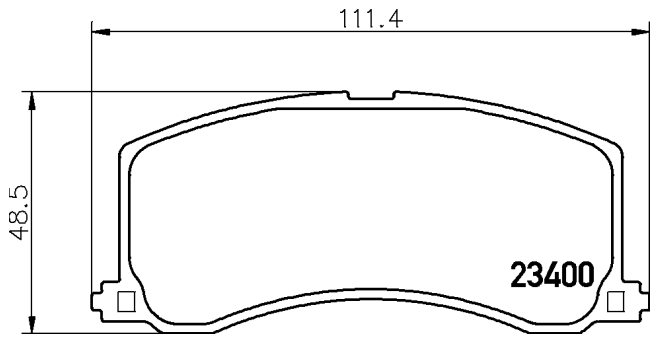

16.5

2340404

23404 204 1 5

CADILLAC, CHEVROLET, HOLDEN, OPEL, SAAB, VAUXHALL

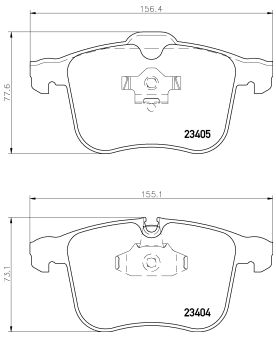

20.4

2340702

23407 193 1 5

CITROËN

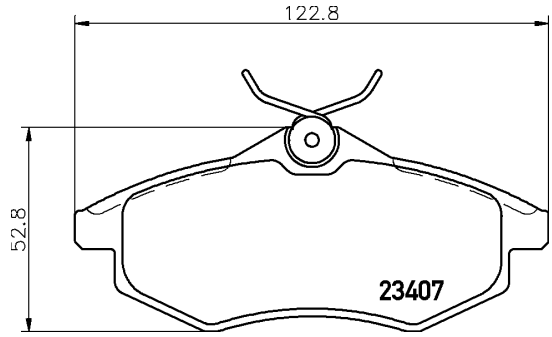

19.3

2340902

23409 193 1 5

CITROËN

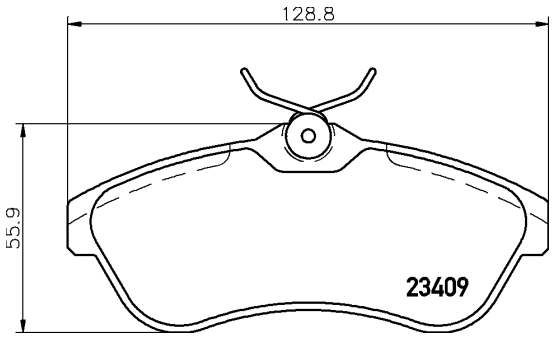

19.3

2341007

23410 157 1 4

FORD, FORD AUSTRALIA, FORD USA, MERCURY

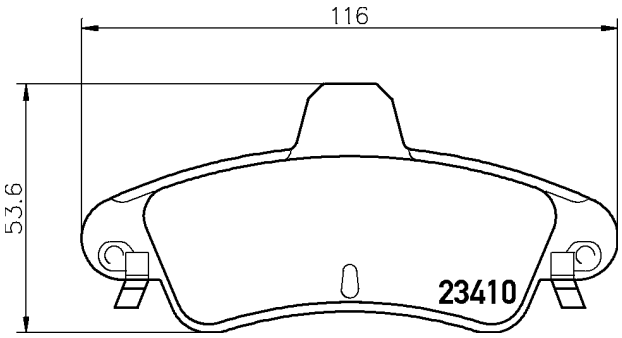

15.7

2341008

23410 157 1 5

FORD, FORD AUSTRALIA, FORD USA, MERCURY

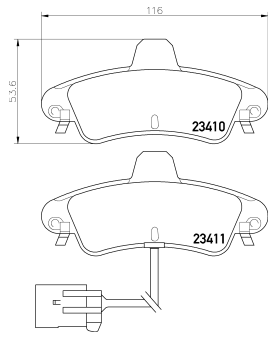

15.7

2341401

23414 170 0 4

PORSCHE

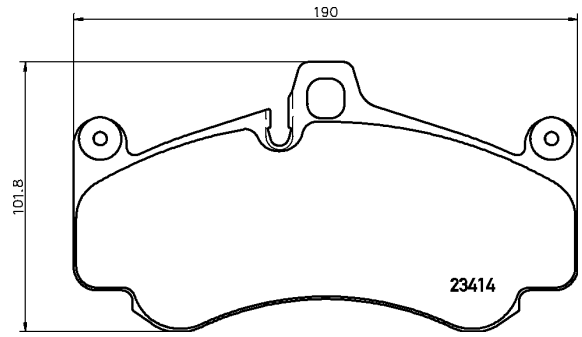

17

2341702

23417 152 1 4

CHEVROLET, HOLDEN, HSV, OPEL, VAUXHALL

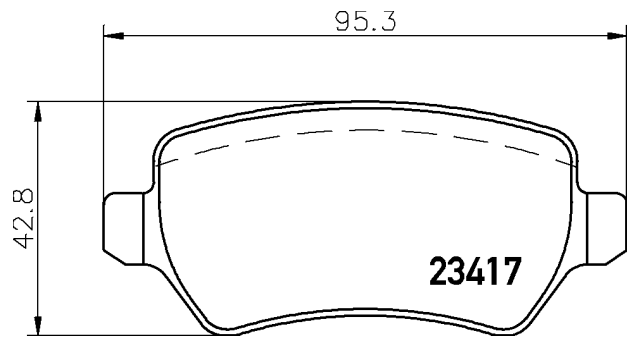

15.2

2341703

23417 152 1 5

CHEVROLET, HOLDEN, KIA, OPEL, VAUXHALL

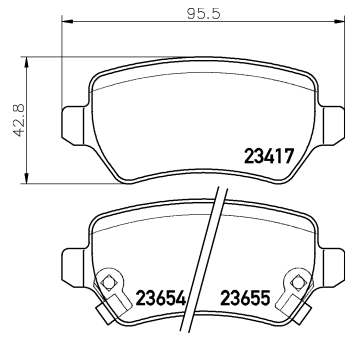

15.2

2341781

23417 152 1 4 epad

CHEVROLET, HOLDEN, HSV, OPEL, VAUXHALL

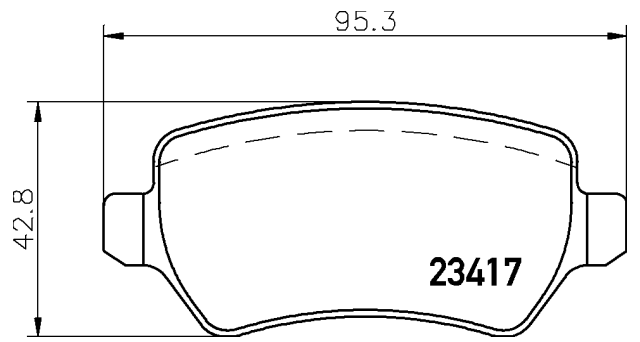

15.2

2341801

23418 196 0 5

FORD, SEAT, VOLKSWAGEN

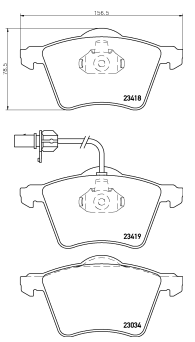

19.6

2342001

23420 165 0 5

ACURA, HONDA, INFINITI, NISSAN, NISSAN (DONGFENG)

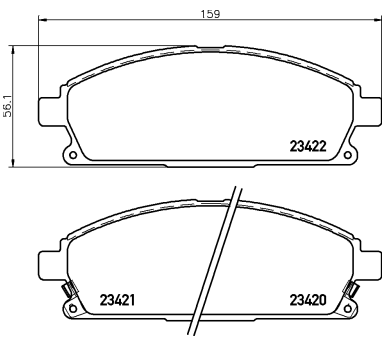

16.5

2342301

23423 178 1 4

FORD USA, JAGUAR, LINCOLN

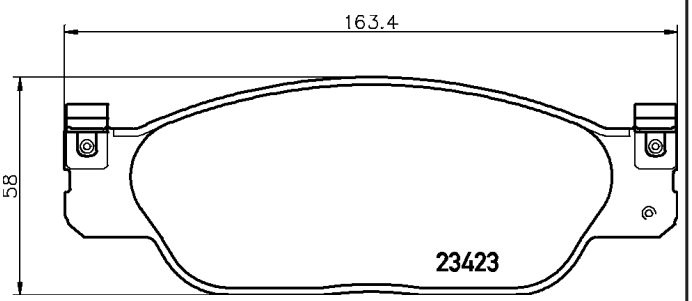

17.8

2342401

23424 178 1 4

FORD USA, JAGUAR, LINCOLN, TROLLER

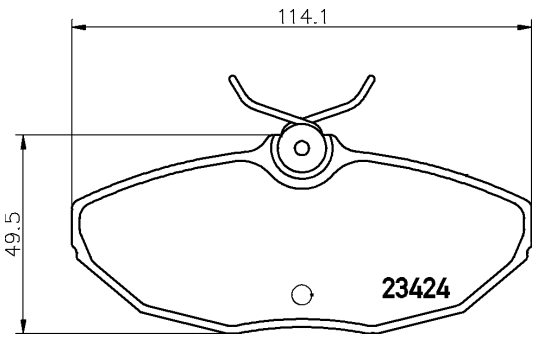

17.8

2342901

23429 150 0 4

LEXUS, TOYOTA

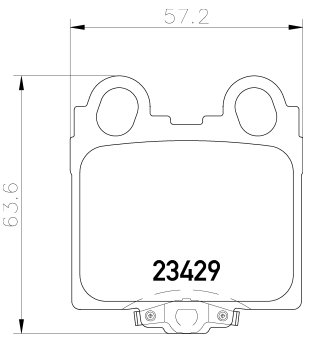

15

2343401

23434 185 1 5

FORD

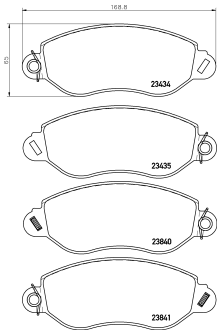

17.7

2343501

23435 177 1 5

NISSAN

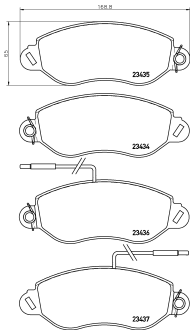

17.7

2344004

23440 176 0 5

FORD, FORD AUSTRALIA

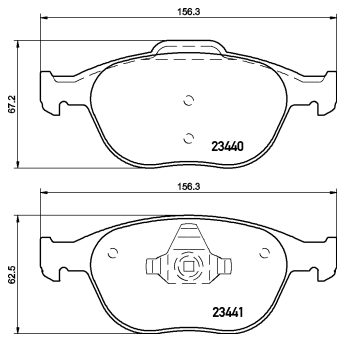

17.6

2344007

23440 171 0 5

FORD, FORD AUSTRALIA

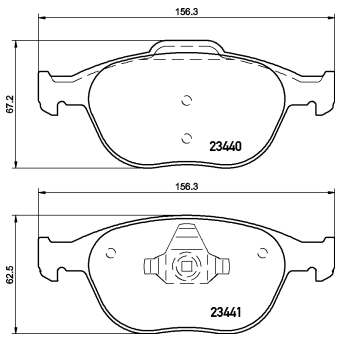

17.1

2344201

23442 160 0 5

ASIA MOTORS, KIA

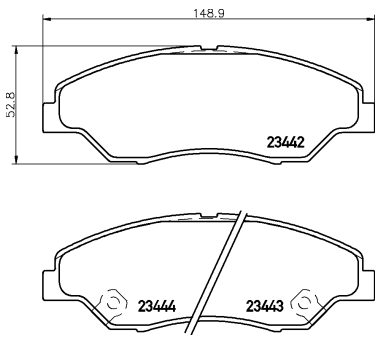

16

2344605

23446 165 1 5

FORD, SEAT, VOLKSWAGEN

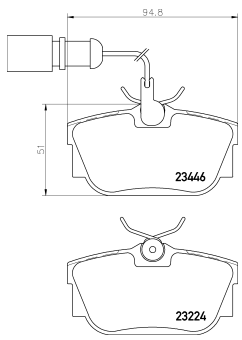

16.5

2344702

23447 173 0 5 T4166

BMW

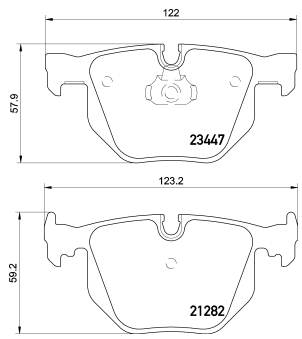

17.3

2344704

23447 173 9 5 T4126

BMW

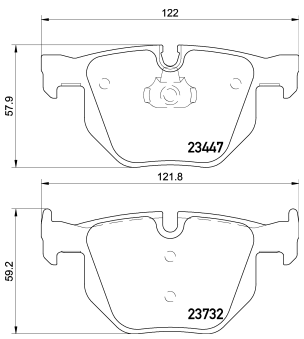

17.3

Illustrations

2344801

23448 208 0 5

BMW

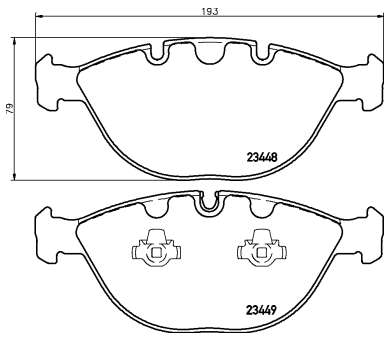

20.8

2345001

23450 183 0 5

KIA

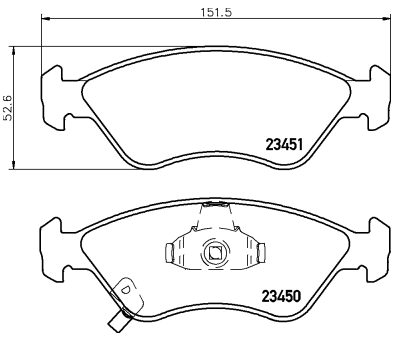

18.3

2345201

23452 190 1 4

LAND ROVER

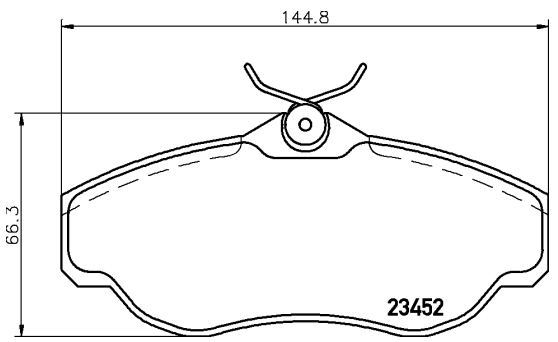

19

2345401

23454 150 0 4

NISSAN

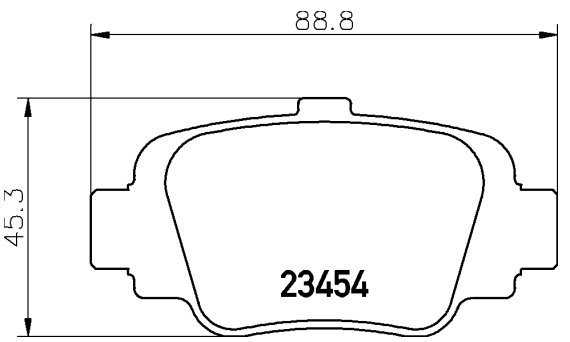

15

2345501

23455 130 0 5

KIA

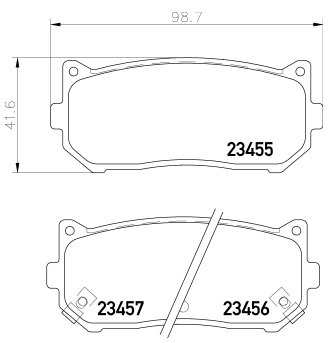

13

2345801

23458 150 1 4

LAND ROVER

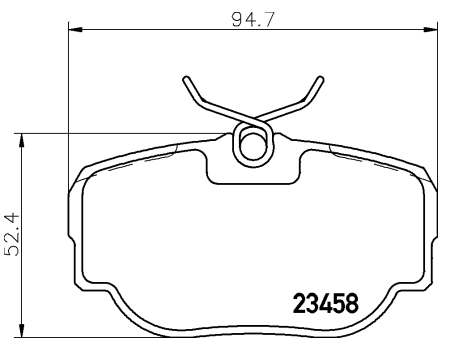

15

2346302

23463 166 0 4

NISSAN

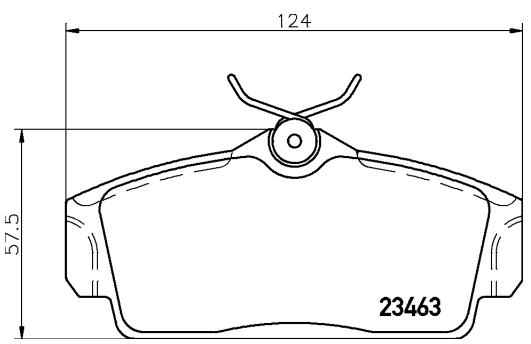

16.6

2346901

23469 201 0 5

VOLKSWAGEN

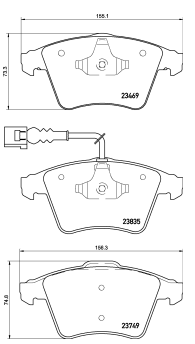

20.1

2347001

23470 178 1 4

JAGUAR

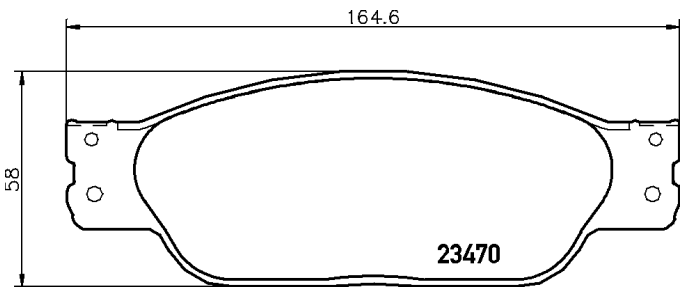

17.8

2347101

23471 150 0 4

LAND ROVER

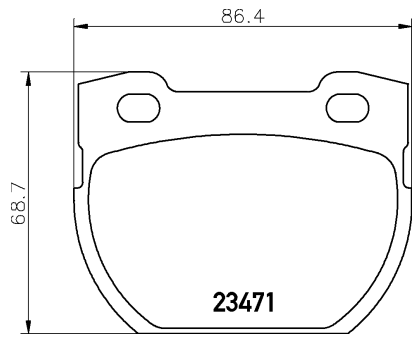

15

2347103

23471 179 0 4

LAND ROVER

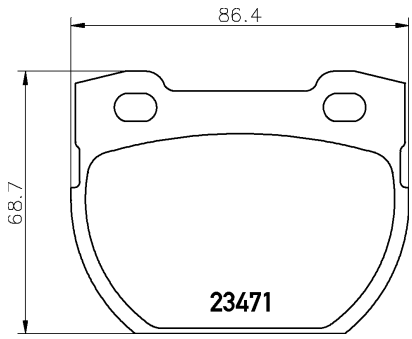

17.9

2347201

23472 170 0 5

FORD ASIA / OZEANIA, FORD AUSTRALIA, FORD USA, MAZDA

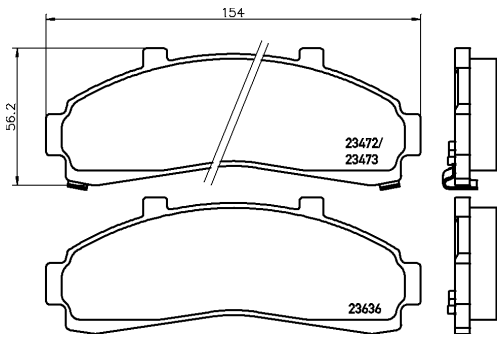

17

2347402

23474 203 0 5

BMW, WIESMANN

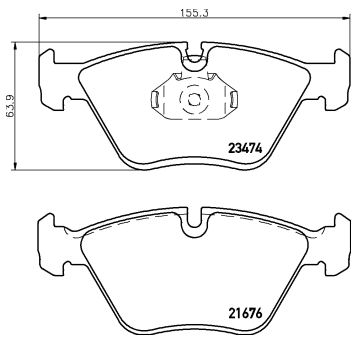

20.3

2347801

23478 165 0 4

MERCEDES-BENZ

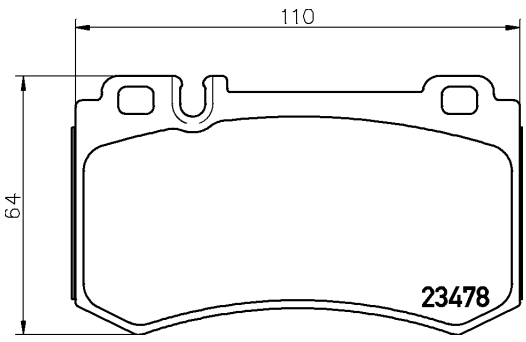

16.5

2347802

23478 148 0 4

MERCEDES-BENZ

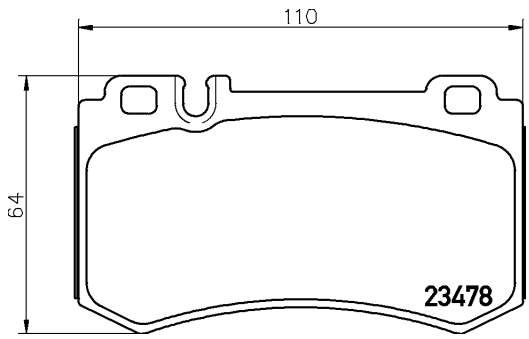

14.8

2348202

23482 168 0 5

NISSAN, RENAULT

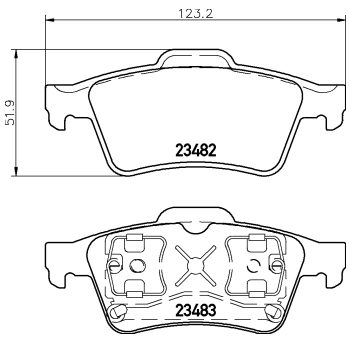

16.8

2348401

23484 170 0 5

KIA

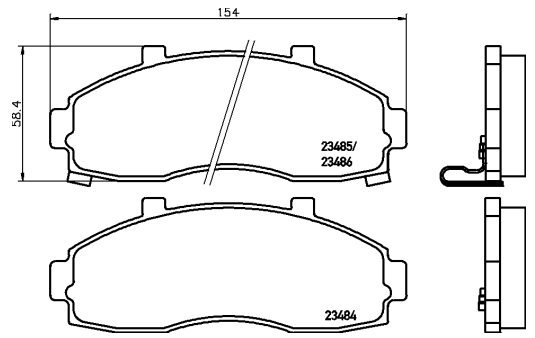

17

2348701

23487 155 0 4

MITSUBISHI

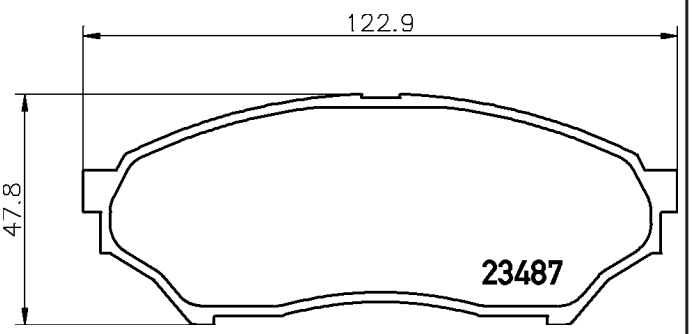

15.5

2348801

23488 160 1 4

FORD AUSTRALIA, MAZDA, MITSUBISHI, MITSUBISHI (BJC)

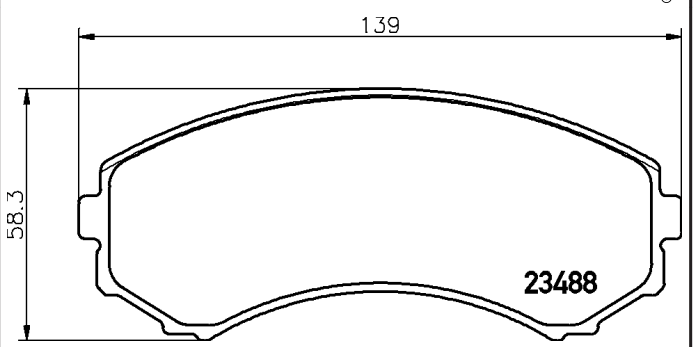

16

2348901

23489 163 0 5

JAGUAR

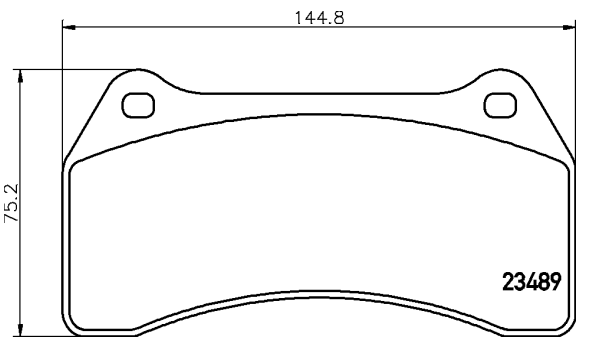

16.3

2349002

23490 150 1 4

FORD AUSTRALIA, MAZDA

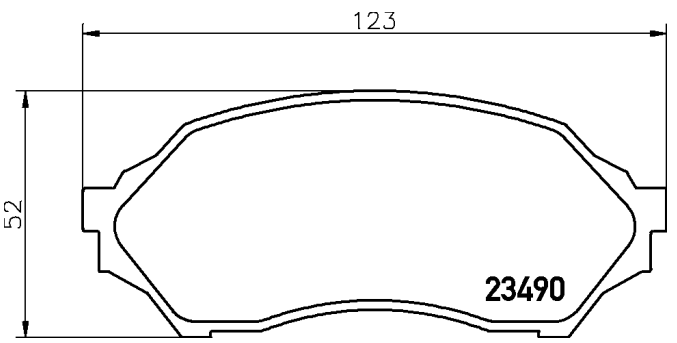

15

2349101

23491 125 0 4

TOYOTA

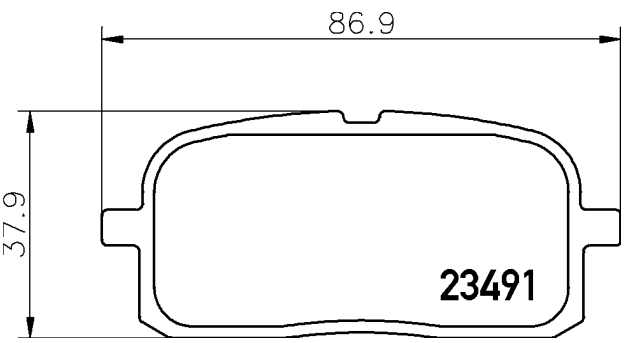

12.5

2349201

23492 165 0 5

MITSUBISHI

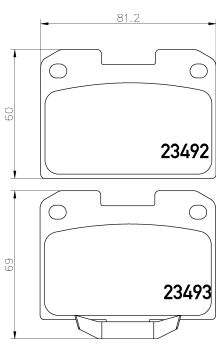

16.5

2349402

23494 140 0 5

DAIHATSU, PERODUA

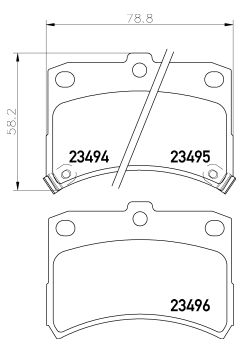

14

2349701

23497 155 0 5

DAIHATSU, PERODUA, TOYOTA

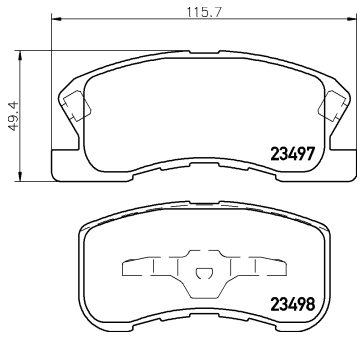

15.5

2349901

23499 170 0 4

LEXUS

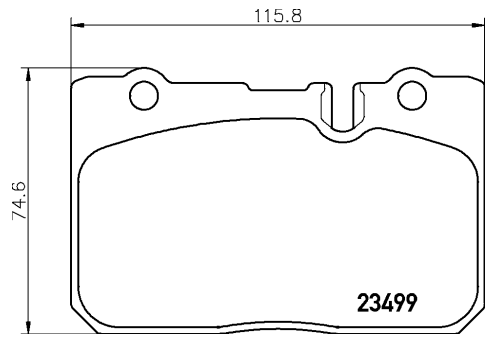

17

2350101

23501 172 0 5

MITSUBISHI

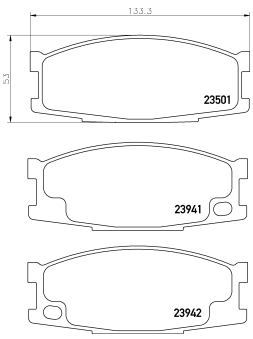

17.2

2350201

23502 160 0 5

NISSAN

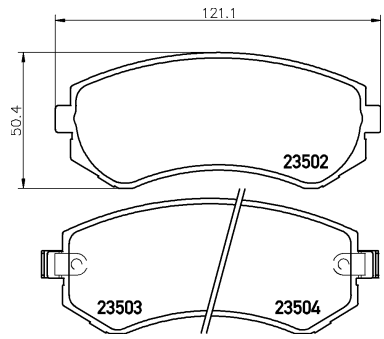

16

2350701

23507 150 0 5

CHEVROLET, DAIHATSU, HOLDEN, PERODUA, SUBARU, SUZUKI, TOYOTA

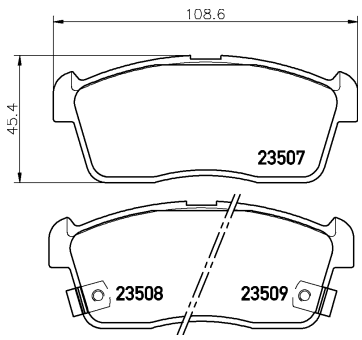

15

2350801

23508 170 0 5

MARUTI SUZUKI, NISSAN, SUZUKI

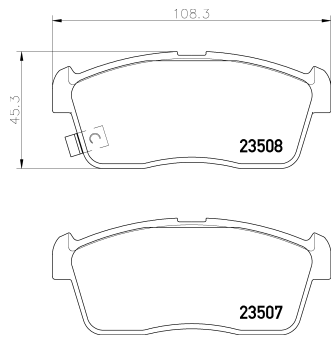

17

2351002

23510 155 0 5

TOYOTA

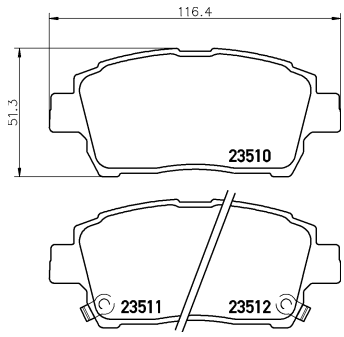

15.5

2351302

23513 170 1 4

LEXUS, TOYOTA

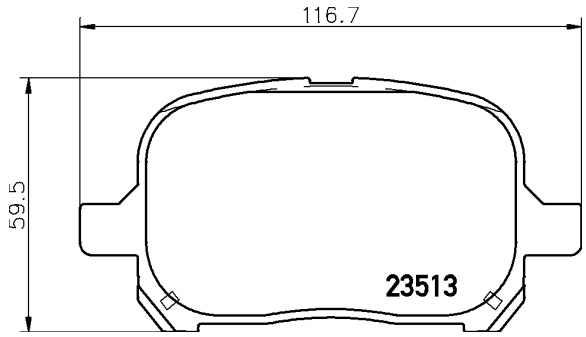

17

2351501

23515 160 1 4

MAZDA

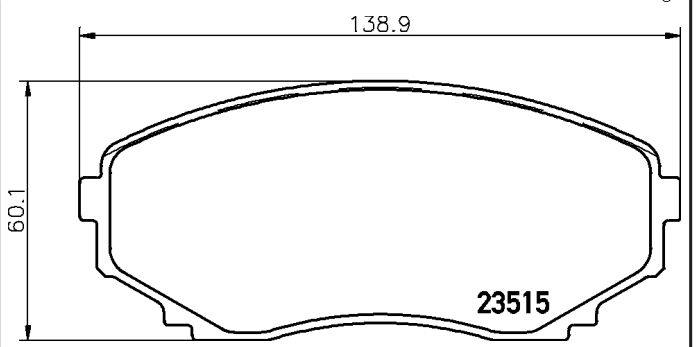

16

2351703

23517 165 1 4

ALFA ROMEO, FIAT, LANCIA

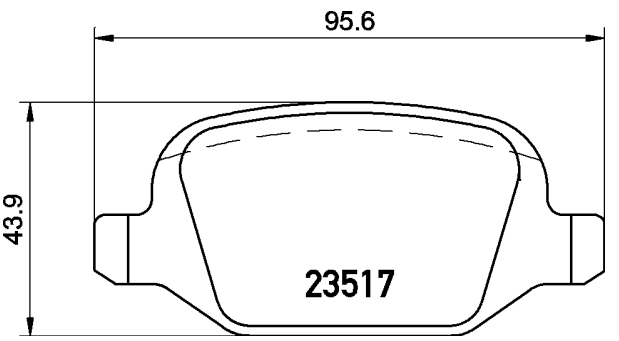

16.5

2351705

23517 172 1 5

ALFA ROMEO

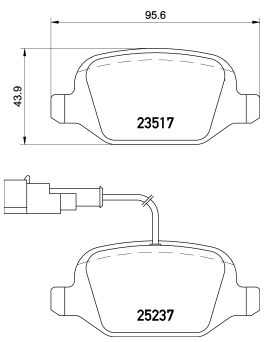

17.2

2351801

23518 170 0 5

HYUNDAI, MITSUBISHI

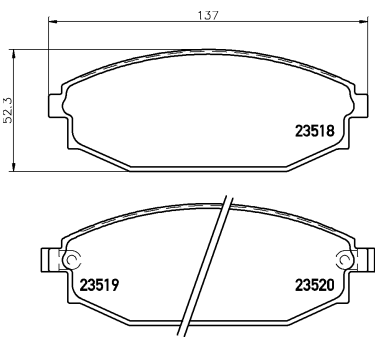

17

2352101

23521 140 0 5

TOYOTA, TOYOTA (FAW)

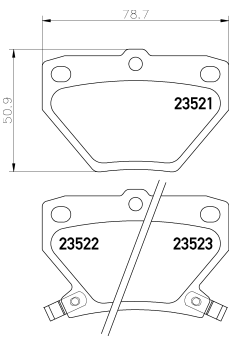

14

2352402

23524 177 0 5

LEXUS, TOYOTA, TOYOTA (FAW)

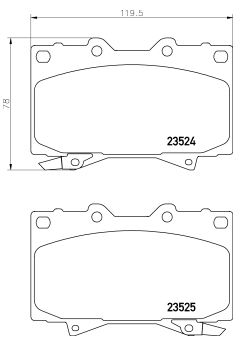

17.7

2352701

23527 150 1 4

HONDA

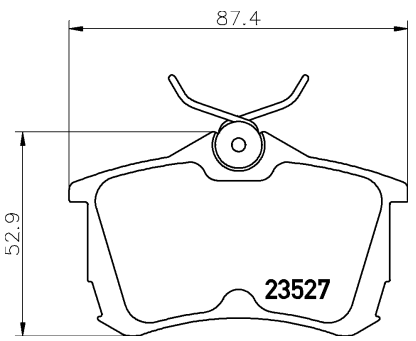

15

2353202

23532 200 0 5

CHRYSLER, DODGE

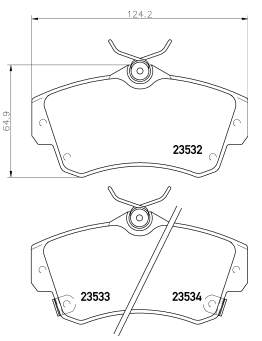

20

2353601

23536 155 0 5

HYUNDAI

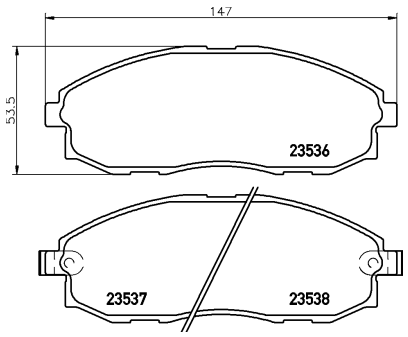

15.5

2353902

23539 175 0 4

LEXUS, TOYOTA, TOYOTA (FAW)

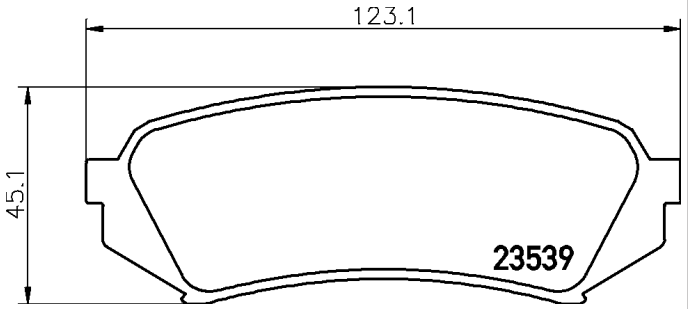

17.5

2354001

23540 165 1 4

FORD, FORD ASIA / OZEANIA, FORD AUSTRALIA, MAZDA

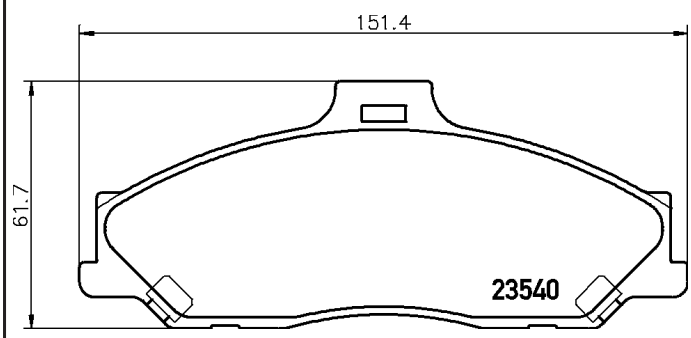

16.5

2354301

23543 150 0 5

HYUNDAI, HYUNDAI (BEIJING), HYUNDAI (HUATAI), JAC, KIA, KIA (DYK)

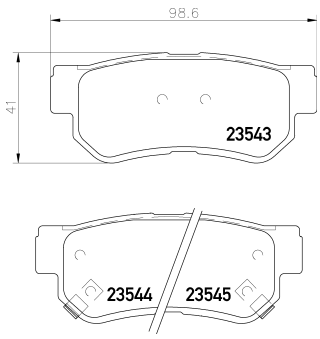

15

2354601

23546 160 1 5

VOLKSWAGEN

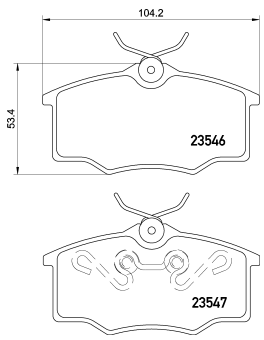

16

2354901

23549 168 1 5

MITSUBISHI, PROTON, SMART, VOLVO

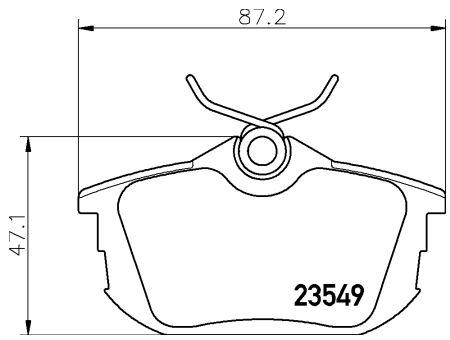

16.8

2355001

23550 173 0 5

BMW, BMW (BRILLIANCE)

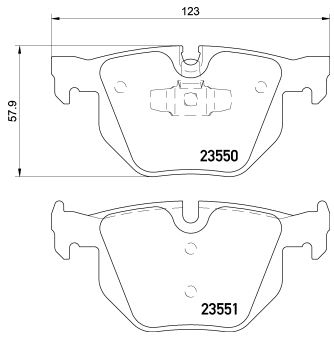

17.3

2355081

23550 173 0 5 epad

BMW, BMW (BRILLIANCE)

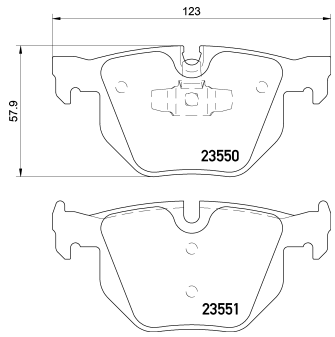

17.3

2355202

23552 180 0 5

FIAT, FIAT (NANJING)

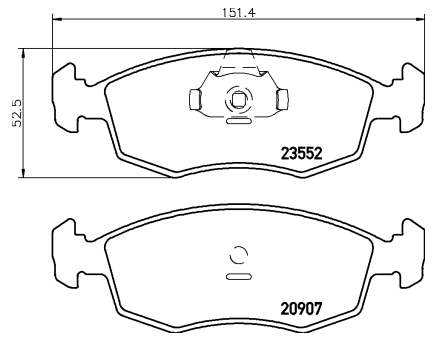

18

2355401

23554 152 1 4

AUDI, PEUGEOT, RENAULT, SEAT, VOLKSWAGEN

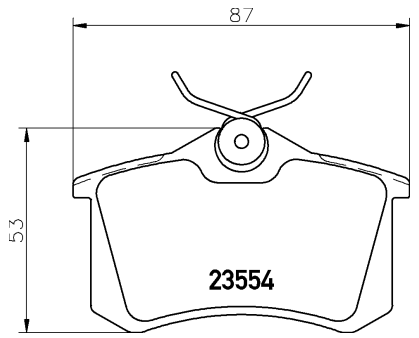

15.2

2355402

23554 172 1 4

AUDI, AUDI (FAW), CITROËN, CITROËN (DF-PSA), FORD, HONGQI, PEUGEOT, SEAT, SKODA, SKODA (SVW), VOLKSWAGEN, VOLKSWAGEN (SVW)

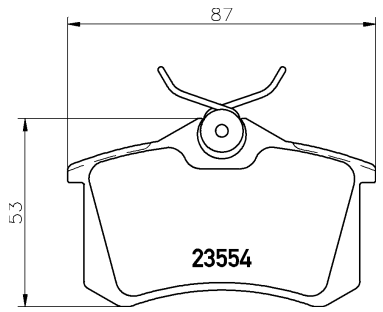

17.2

2355403

23554 172 1 5

FORD, SEAT, VOLKSWAGEN

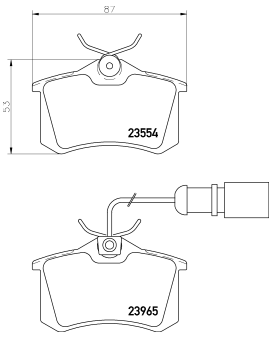

17.2

2355406

23554 162 1 4

NISSAN, RENAULT

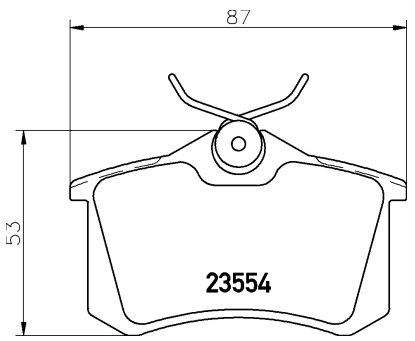

16.2

2355481

23554 172 1 4 epad

AUDI, AUDI (FAW), CITROËN, CITROËN (DF-PSA), FORD, HONGQI, PEUGEOT, SEAT, SKODA, SKODA (SVW), VOLKSWAGEN, VOLKSWAGEN (SVW)

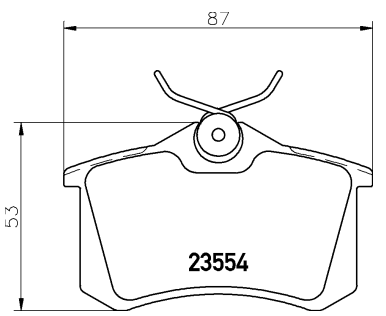

17.2

2355482

23554 152 1 4 epad

AUDI, PEUGEOT, RENAULT, SEAT, VOLKSWAGEN

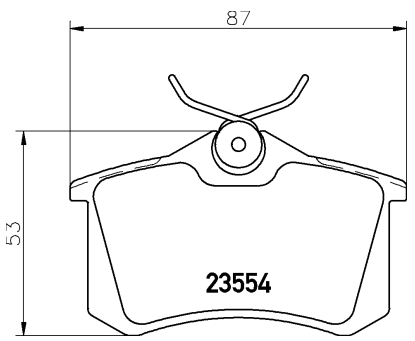

15.2

2355701

23557 172 1 4

FORD, FORD (CHANGAN), FORD AUSTRALIA, JAGUAR

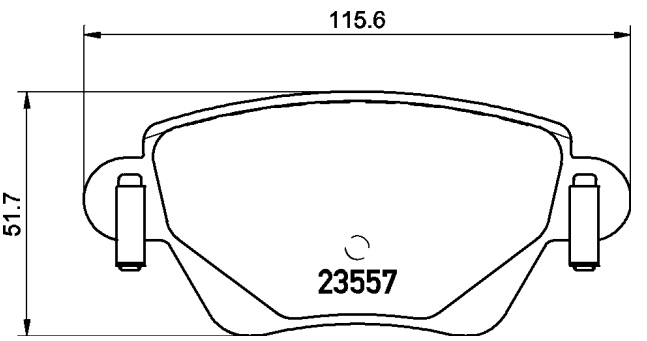

17.2

2355702

23557 169 1 4

RENAULT

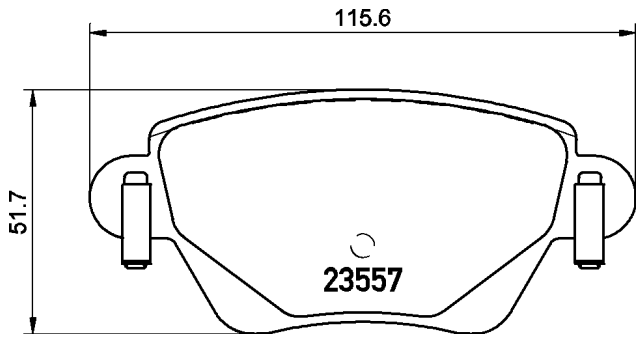

16.9

2355802

23558 170 0 5

SUBARU, TOYOTA

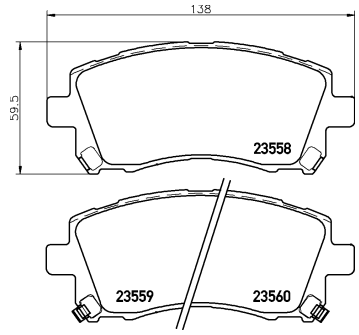

17

2356102

23561 170 0 5

CHRYSLER, DODGE, PLYMOUTH

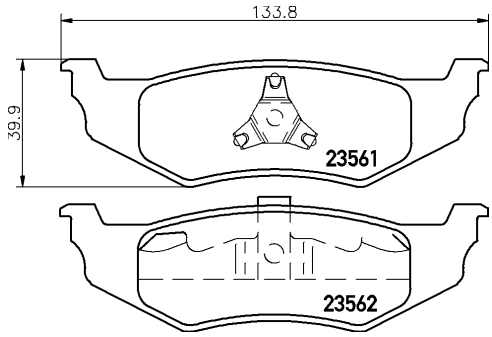

17

2356601

23566 172 0 5

ACURA, HONDA

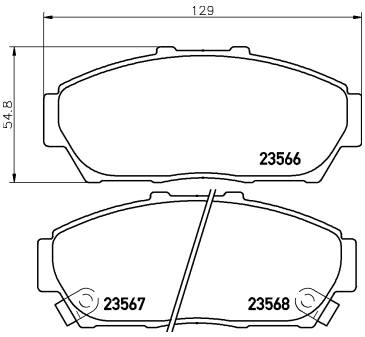

17.2

2356901

23569 170 0 5

DAEWOO, HYUNDAI, HYUNDAI (HUATAI), SSANGYONG

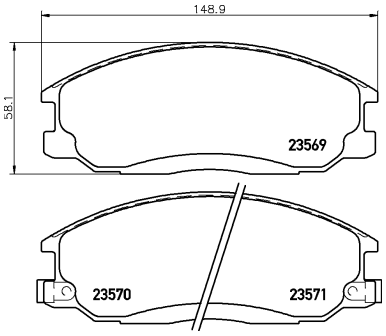

17

2357202

23572 138 0 5

SAAB, SUBARU

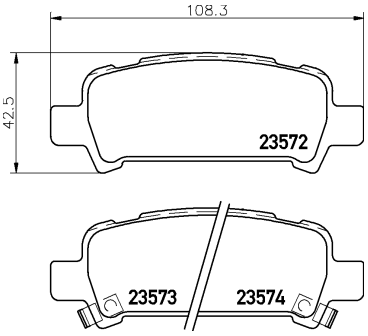

13.8

2357501

23575 160 0 5

CITROËN, FIAT, LANCIA, PEUGEOT

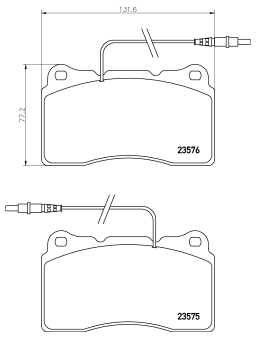

16

2357701

23577 185 1 5

FORD, FORD AUSTRALIA

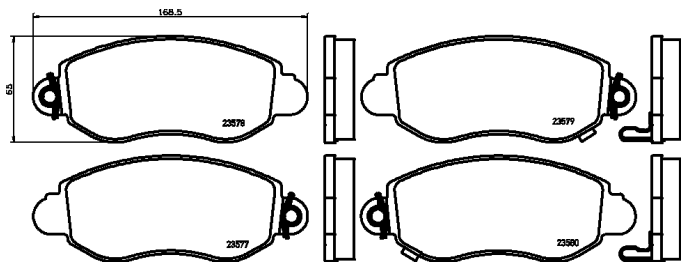

18.5

2358101

23581 190 1 4

SEAT, SKODA, VOLKSWAGEN

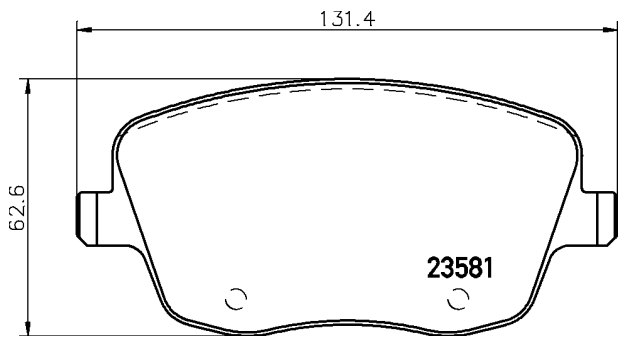

19

2358102

23581 190 1 5

SEAT, SKODA, VOLKSWAGEN

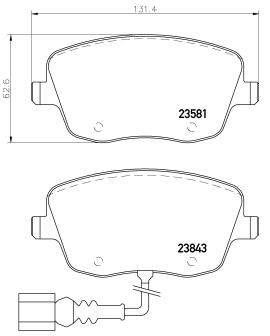

19

2358202

23582 155 1 5

CHRYSLER, CITROËN, DODGE, JEEP, LANCIA, MITSUBISHI, MITSUBISHI (BJC), PEUGEOT

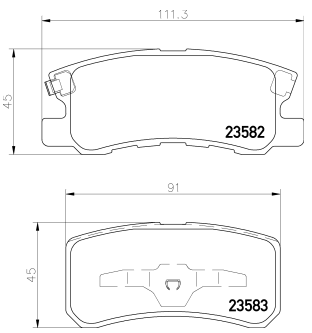

15.5

2358401

23584 160 1 4 T4047

CITROËN, DONGNAN (SOUEAST), MITSUBISHI, MITSUBISHI (BJC), MITSUBISHI (GAC), MITSUBISHI (SOUEAST), PEUGEOT

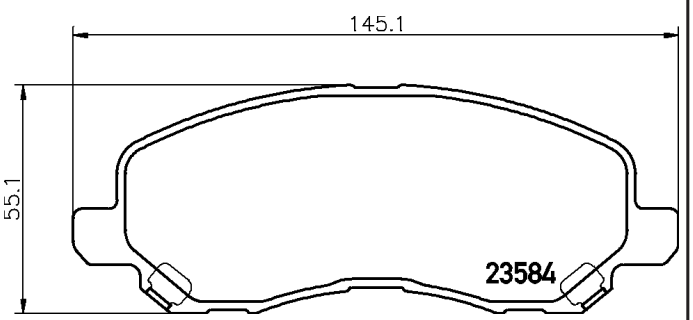

16

2358403

23584 160 1 4 T4361

CHRYSLER, DODGE, JEEP, LANCIA, MITSUBISHI

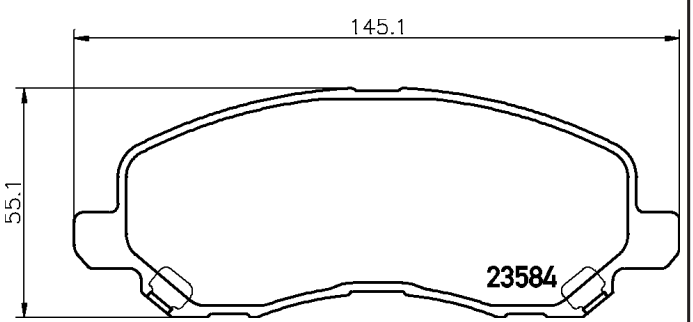

16

2358501

23585 170 0 5

TOYOTA

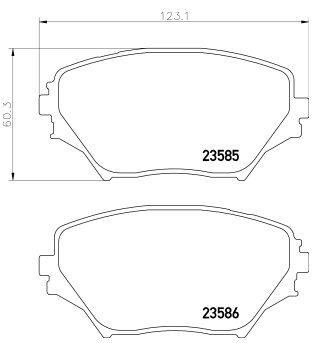

17

2358701

23587 203 0 5

AUDI, SEAT, SKODA, SKODA (SVW), VOLKSWAGEN, VOLKSWAGEN (FAW)

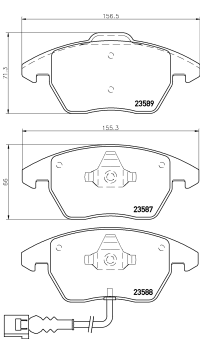

20.3

2358704

23587 203 9 5

AUDI, VOLKSWAGEN

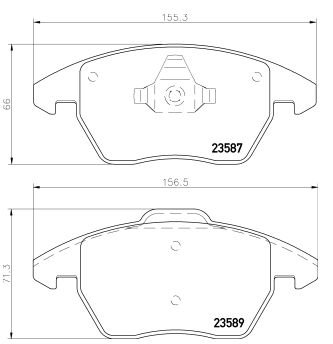

20.3

2358781

23587 203 0 5 epad

AUDI, SEAT, SKODA, SKODA (SVW), VOLKSWAGEN, VOLKSWAGEN (FAW)

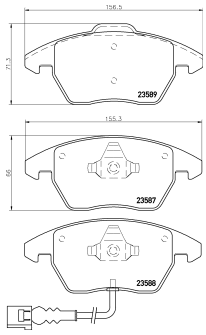

20.3

2358782

23587 203 9 5 epad

AUDI, VOLKSWAGEN

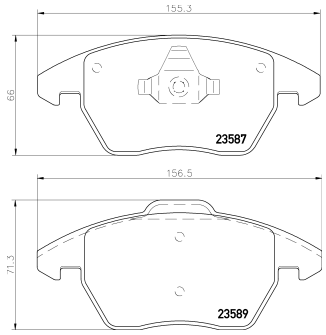

20.3

2358901

23589 190 0 5

CITROËN, PEUGEOT

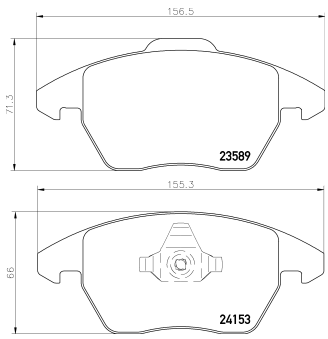

19

2359001

23590 190 0 5

VOLVO

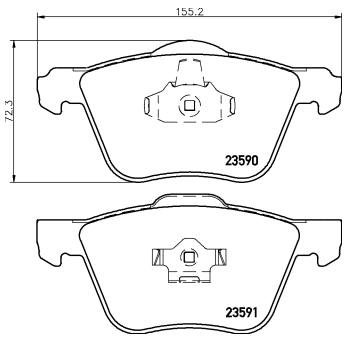

19

2359201

23592 150 0 4

BYD, GEELY, LEXUS, LIFAN, TOYOTA, TOYOTA (FAW)

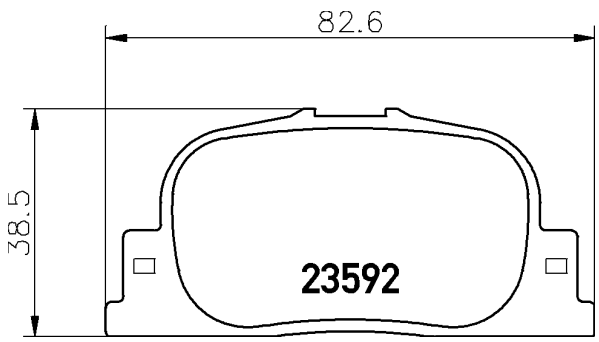

15

2359301

23593 150 0 5

MITSUBISHI

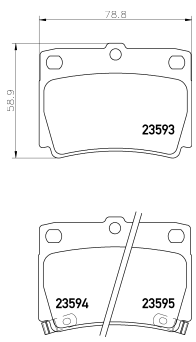

15

2359703

23597 180 1 5

CITROËN, CITROËN (DF-PSA), PEUGEOT, PEUGEOT (DF-PSA)

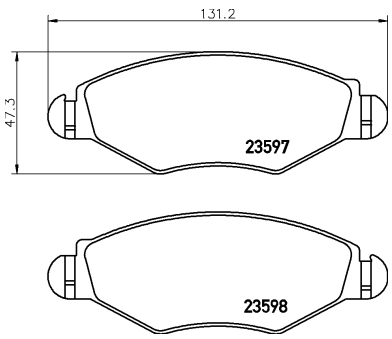

18

2360001

23600 190 1 4

CITROËN, CITROËN (DF-PSA), PEUGEOT, PEUGEOT (DF-PSA)

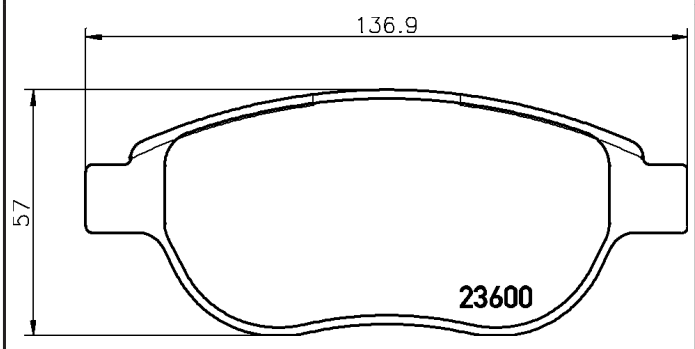

19

2360102

23601 137 1 4

FIAT, LANCIA

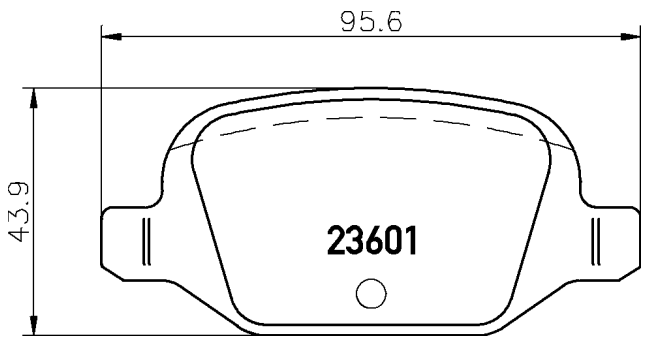

13.7

2360201

23602 197 2 5

CITROËN, FIAT, PEUGEOT

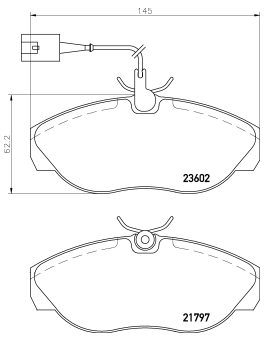

19.7

2360301

23603 197 2 5

CITROËN, FIAT, PEUGEOT

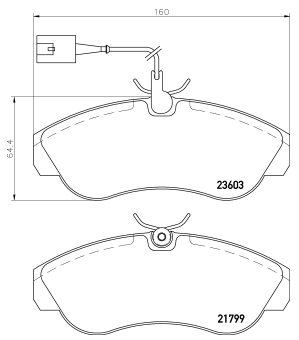

19.7

2360406

23604 188 0 5

FORD, FORD AUSTRALIA, FORD USA, MAZDA

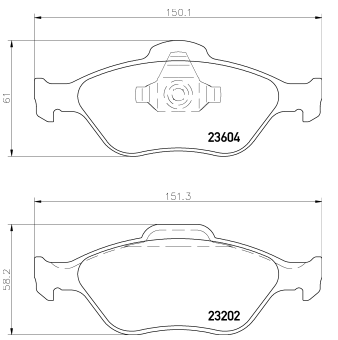

18.8

2360501

23605 155 1 5

CHEVROLET, HOLDEN, OPEL, SUBARU, SUZUKI, VAUXHALL

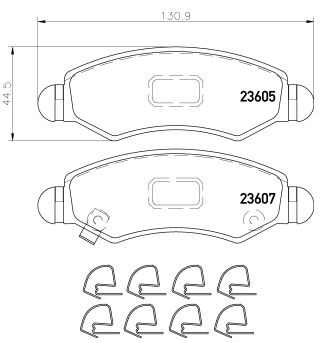

15.5

2360801

23608 150 0 5

HYUNDAI, KIA, MITSUBISHI

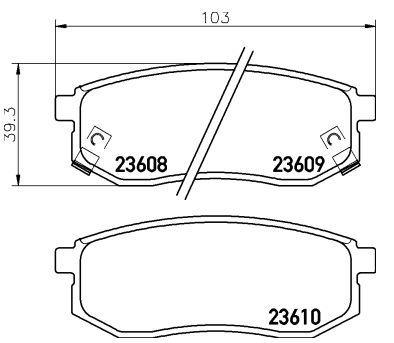

15

2361101

23611 190 0 5

NISSAN

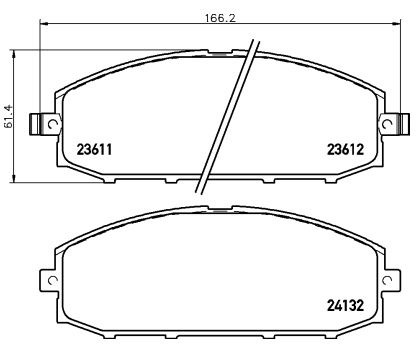

19

2361301

23613 178 0 4

NISSAN, OPEL, RENAULT, VAUXHALL

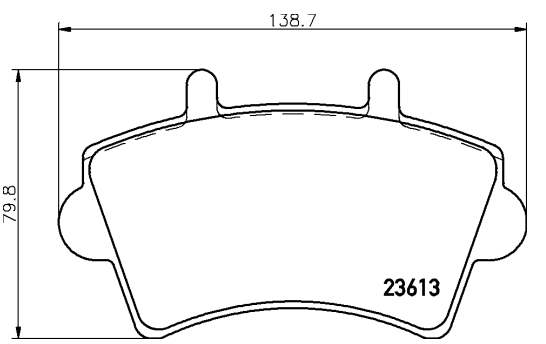

17.8

2361401

23614 140 0 4

HOLDEN

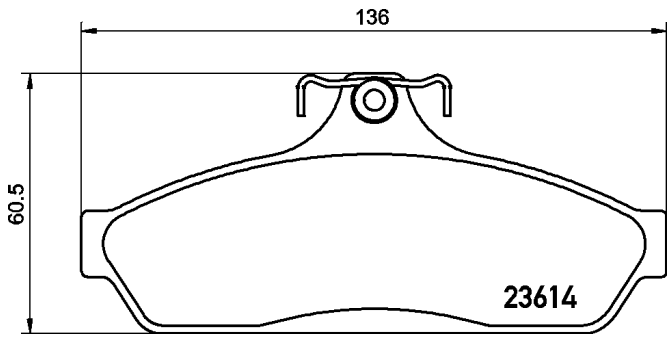

14

2361501

23615 175 0 4

LAND ROVER

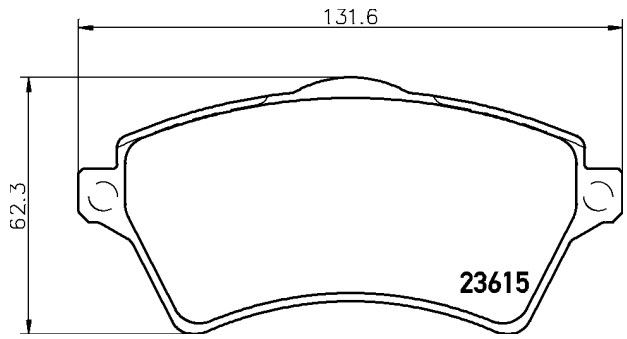

17.5

2361601

23616 133 0 5

HONDA

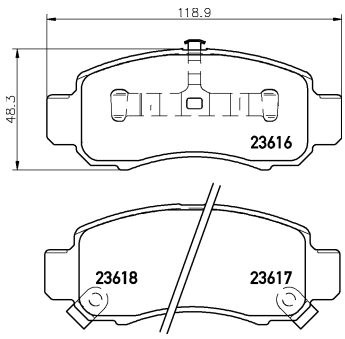

13.3

2362002

23620 166 1 5

TOYOTA

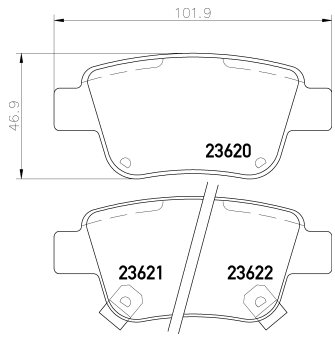

16.6

2362303

23623 174 2 5

BMW, BMW (BRILLIANCE)

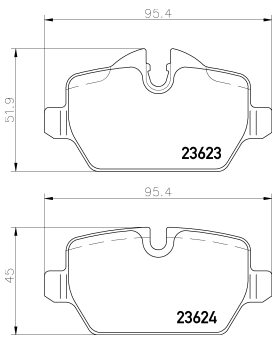

17.4

2362381

23623 174 2 5 epad

BMW, BMW (BRILLIANCE)

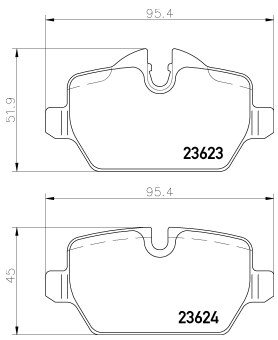

17.4

2362701

23627 150 0 5

FORD AUSTRALIA, FORD USA

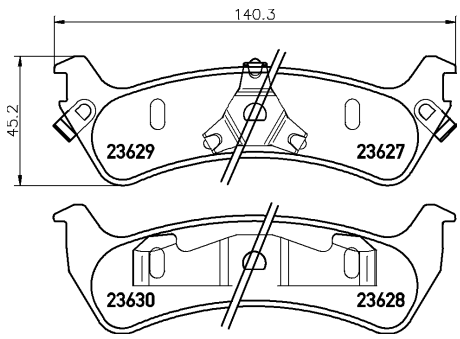

15

2363101

23631 178 0 5

JEEP

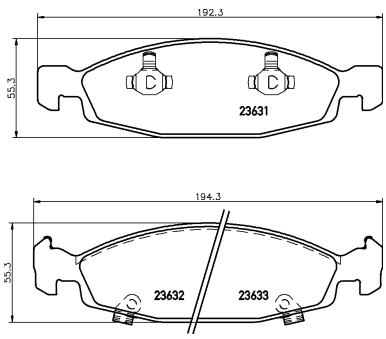

17.8

2363501

23635 180 0 4

FORD USA

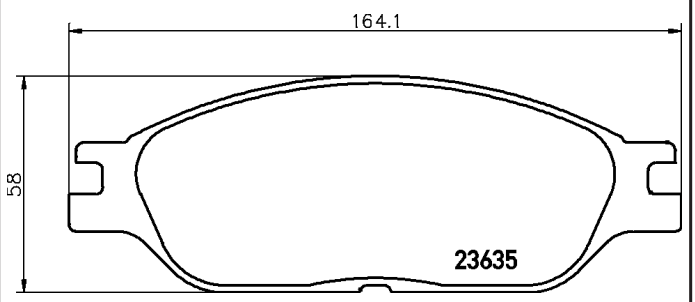

18

2363701

23637 170 0 4

FORD USA, MERCURY

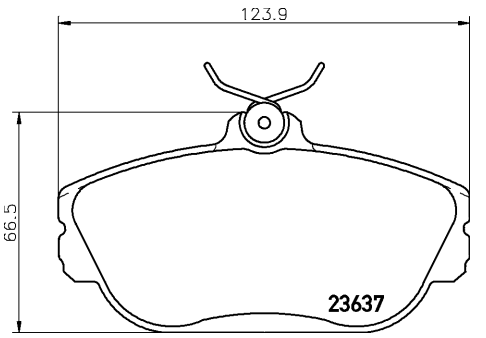

17

2363801

23638 175 0 5

CHRYSLER, DODGE, JEEP

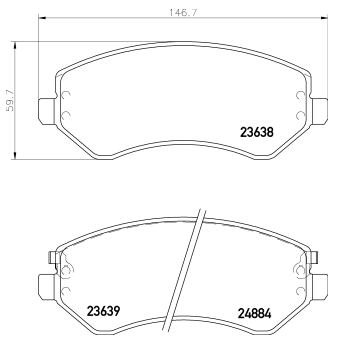

17.5

2364001

23640 180 0 5

CHRYSLER, DODGE

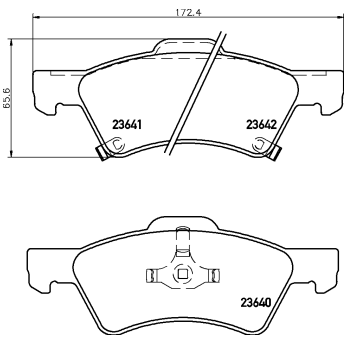

18

2364601

23646 160 0 5

TOYOTA

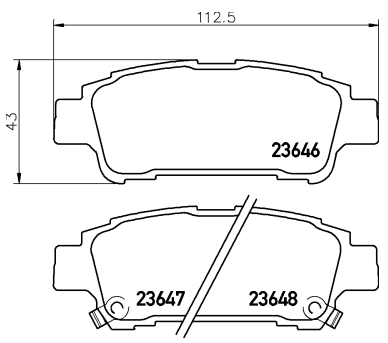

16

2364901

23649 162 0 5

KIA, KIA (DYK), NAZA

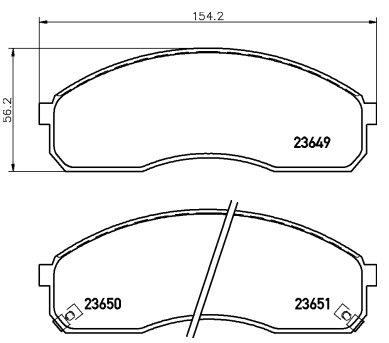

16.2

2365201

23652 148 0 5

ACURA, HONDA, HONDA (GAC)

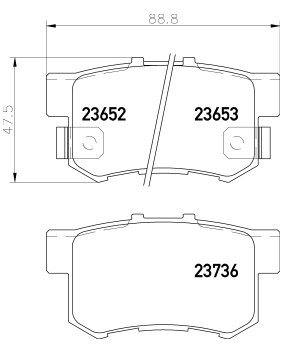

14.8

2365601

23656 140 0 5

DR, TOYOTA

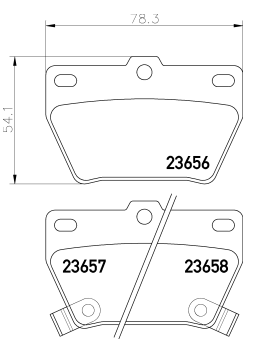

14

2366201

23662 150 1 4

DR, SUZUKI, SUZUKI (CHANGHE)

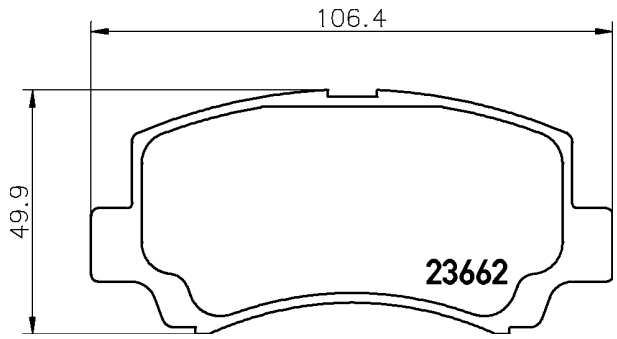

15

2366301

23663 152 0 4

CHEVROLET, CHEVROLET (SGM)

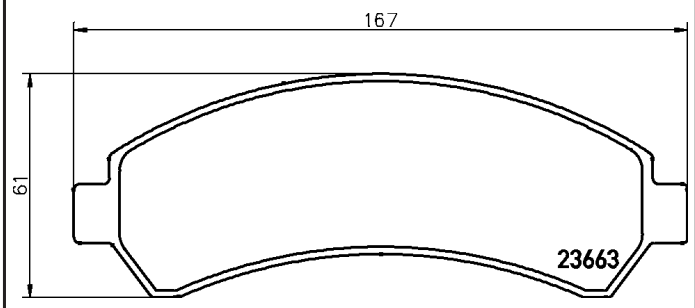

15.2

2366401

23664 148 0 5

CHEVROLET

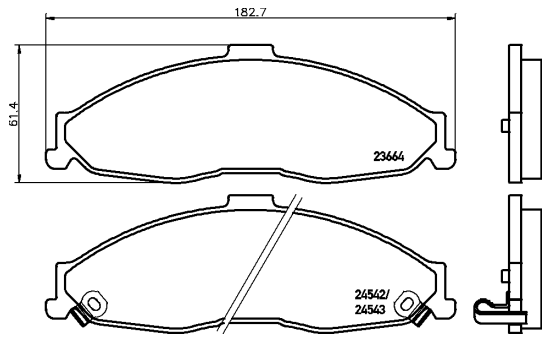

14.9

2366901

23669 168 1 4

NISSAN, OPEL, RENAULT, VAUXHALL

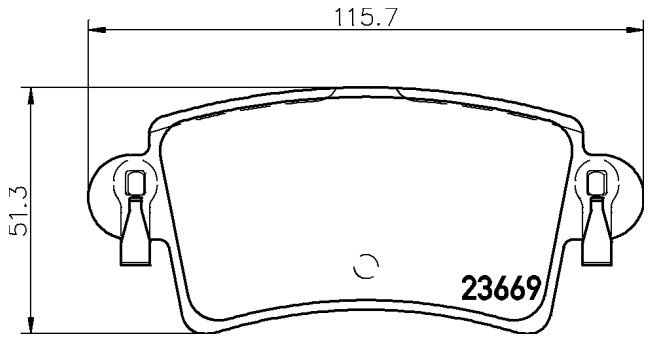

16.8

2367101

23671 170 1 4

LADA

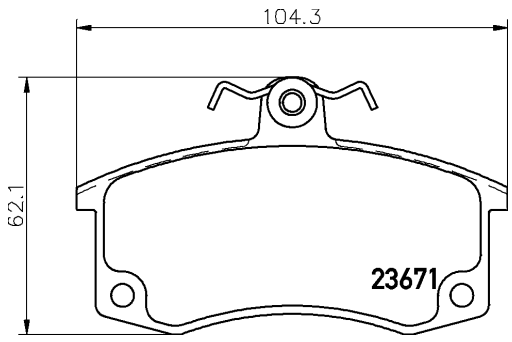

17

2367301

23673 150 0 5

DAEWOO, SSANGYONG

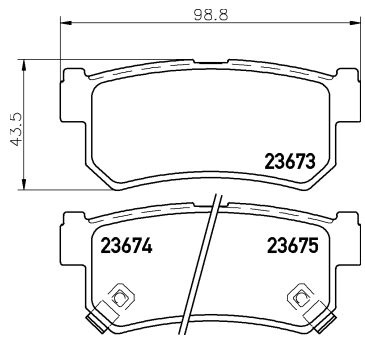

15

2367701

23677 155 0 5

CHEVROLET

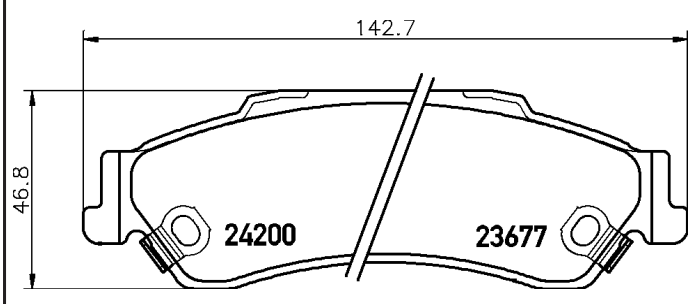

15.5

2367801

23678 160 1 4

FORD ASIA / OZEANIA, FORD AUSTRALIA, MAZDA

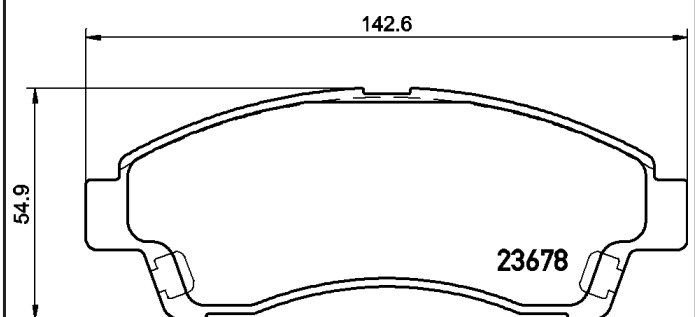

16

2367901

23679 161 0 4

MG

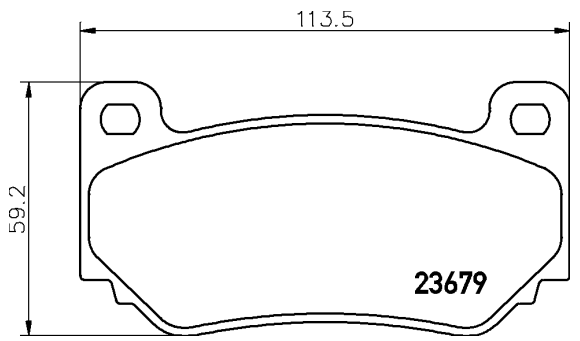

16.1

2368701

23687 175 0 5

DODGE

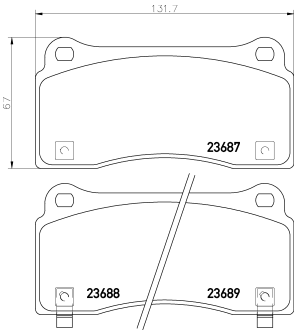

17.5

2369202

23692 167 0 4

PORSCHE, VOLKSWAGEN

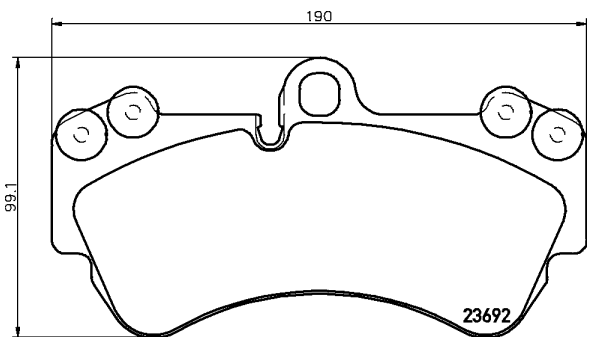

16.7

2369281

23692 167 0 4 epad

PORSCHE, VOLKSWAGEN

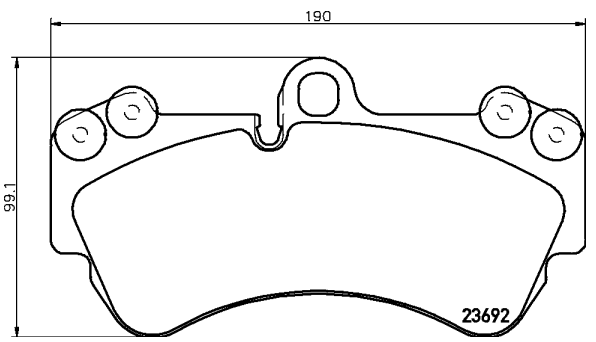

16.7

2369302

23693 167 0 4

AUDI, PORSCHE, VOLKSWAGEN

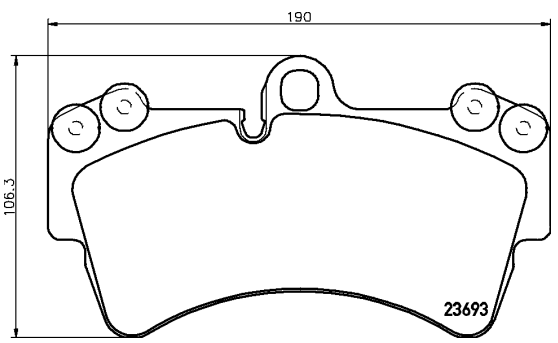

16.7

2369381

23693 167 0 4 epad

AUDI, PORSCHE, VOLKSWAGEN

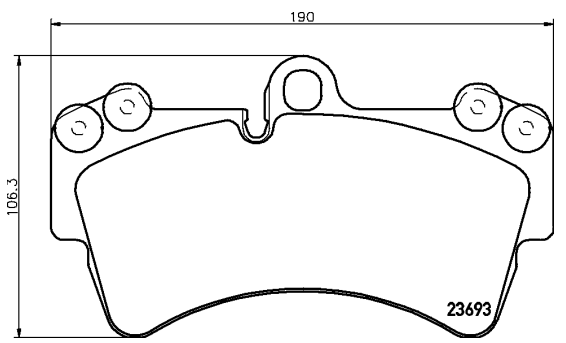

16.7

2369402

23694 167 0 4

AUDI, PORSCHE, VOLKSWAGEN

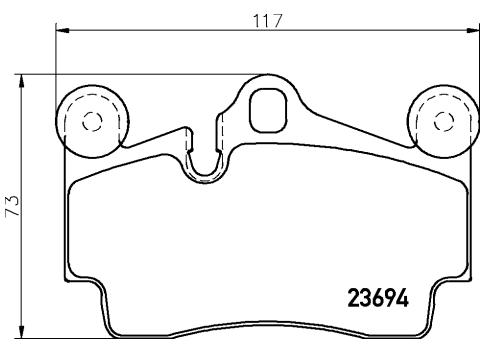

16.7

2369481

23694 167 0 4 epad

AUDI, PORSCHE, VOLKSWAGEN

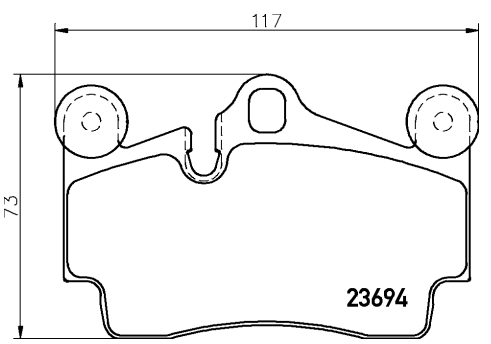

16.7

2369801

23698 160 0 5

INFINITI, NISSAN, RENAULT, RENAULT SAMSUNG

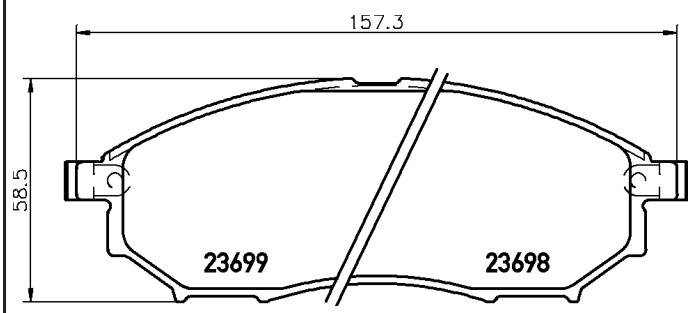

16

2369803

25698 170 0 5

INFINITI, NISSAN

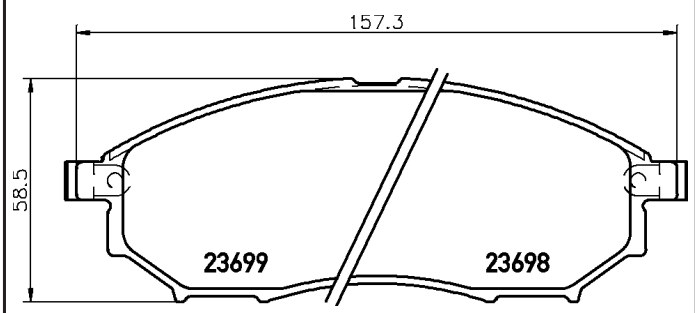

17

2370201

23702 158 0 4

CHERY, LEXUS, RELY, TOYOTA

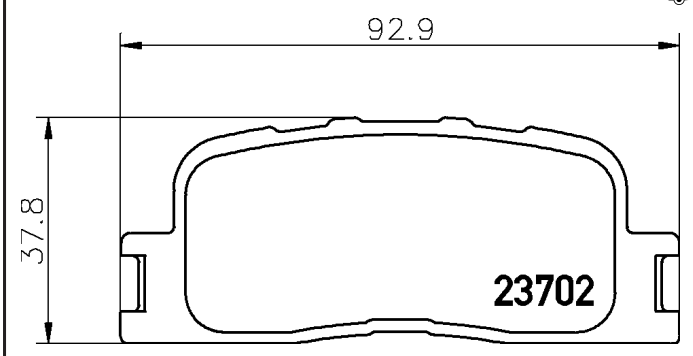

15.8

2370301

23703 185 1 4

LEXUS, TOYOTA

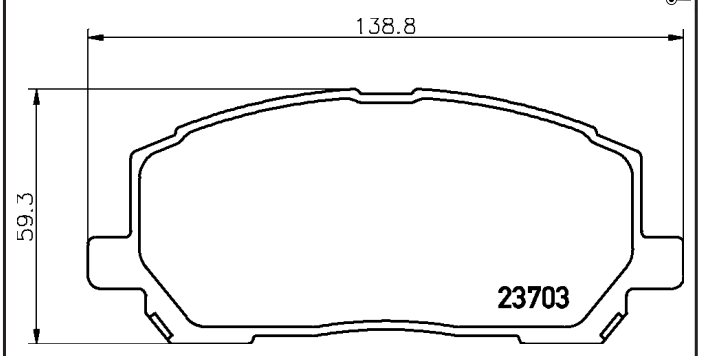

18.5

2370502

23705 178 1 5

FIAT, LANCIA

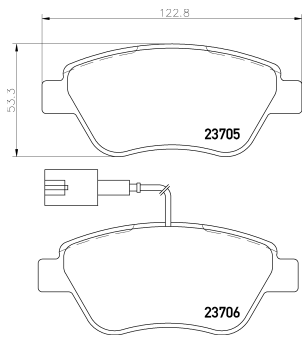

17.8

2370503

23705 178 1 4

FIAT, FIAT (NANJING), LANCIA

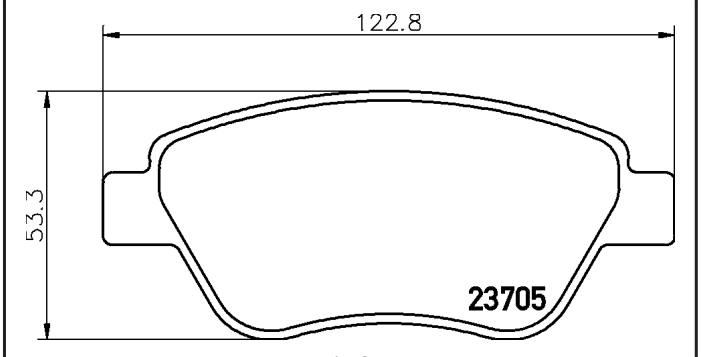

17.8

2370581

23705 178 1 5 epad

FIAT, LANCIA

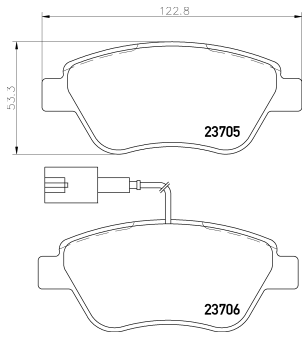

17.8

2370601

23706 178 1 5

CITROËN, FIAT, PEUGEOT

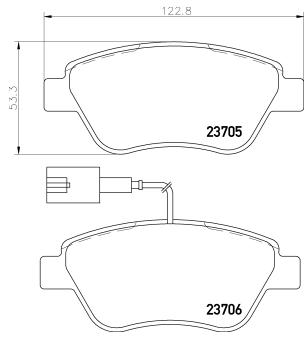

17.8

2370802

23708 182 1 5

CHRYSLER, FIAT, LANCIA, OPEL, VAUXHALL

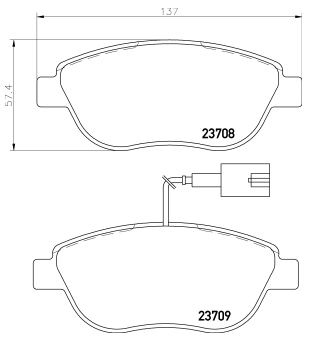

19

2370803

23708 182 1 4

FIAT, LANCIA

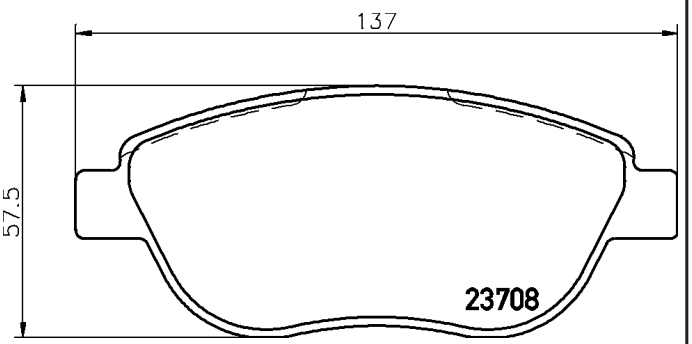

19

2370881

23708 182 1 5 epad

CHRYSLER, FIAT, LANCIA, OPEL, VAUXHALL

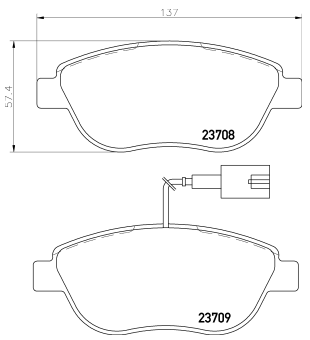

19

2370901

23709 190 1 5

FIAT

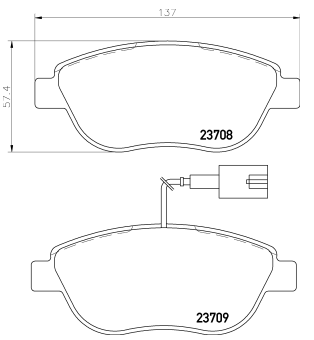

19

2371102

23711 182 1 5

ALFA ROMEO, FIAT, LANCIA

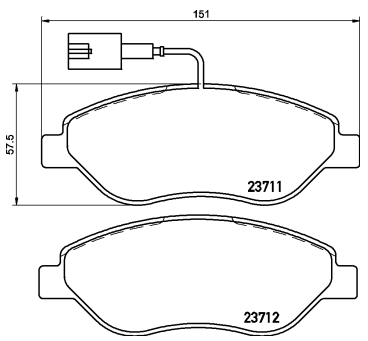

18.2

2371104

23711 194 1 5

ALFA ROMEO, CHRYSLER, FIAT, LANCIA

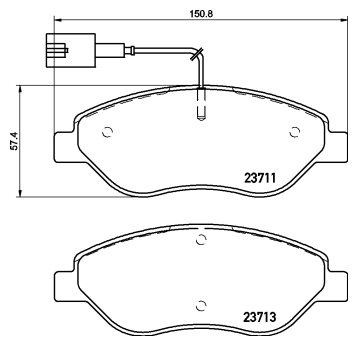

19.4

2371401

23714 155 1 4

ALFA ROMEO, CHRYSLER, FIAT, LANCIA

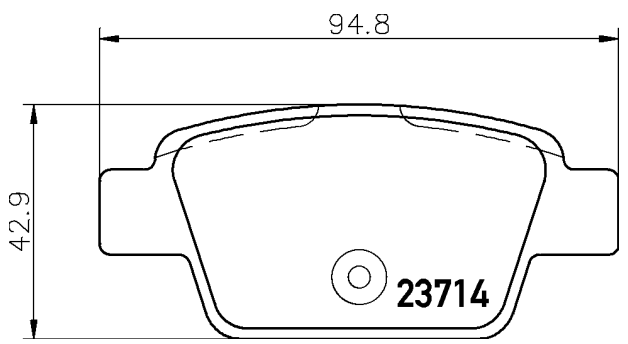

15.5

2371403

23714 172 1 5

FIAT, LANCIA

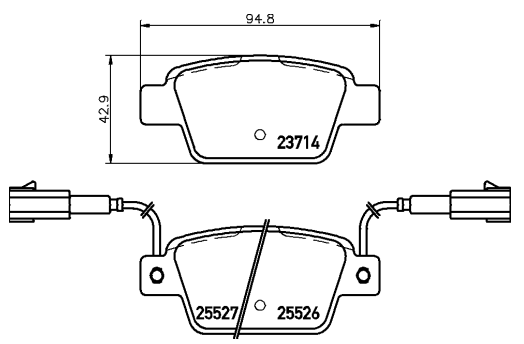

17.2

2371481

23714 155 1 4 epad

ALFA ROMEO, CHRYSLER, FIAT, LANCIA

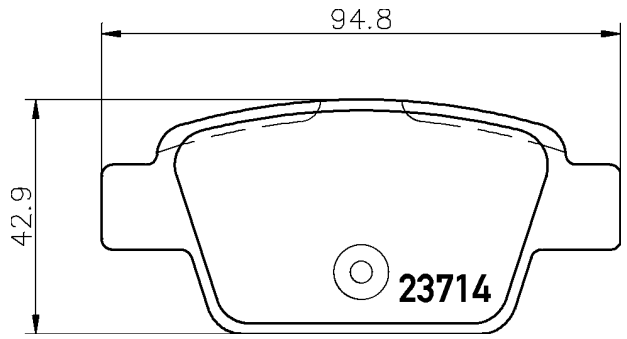

15.5

2371501

23715 186 0 4

MAYBACH

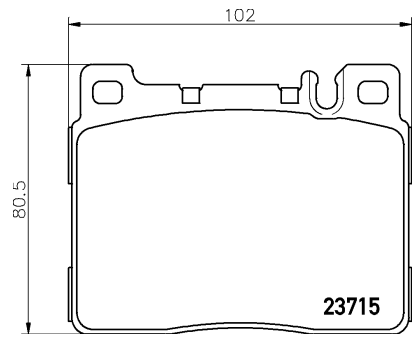

18.6

2372001

23720 170 0 5

HONDA

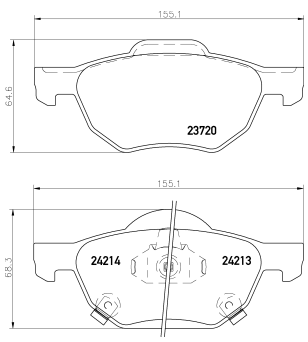

17

2372301

23723 182 0 5

FORD, FORD AUSTRALIA, FORD USA, MAZDA, VOLVO, VOLVO (CHANGAN)

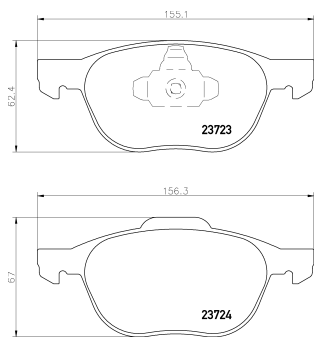

18.2

2372381

23723 182 0 5 epad

FORD, FORD AUSTRALIA, FORD USA, MAZDA, VOLVO, VOLVO (CHANGAN)

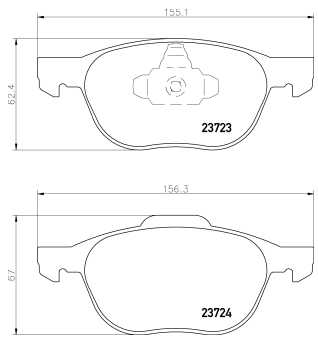

18.2

2372601

23726 165 0 5

HYUNDAI, KIA, SSANGYONG

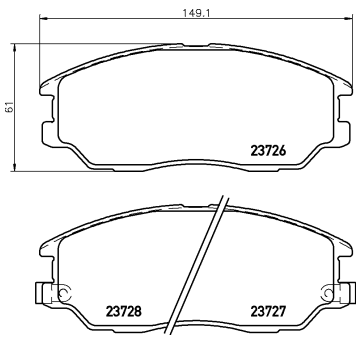

16.5

2372901

23729 170 0 5

ACURA, HONDA, HONDA (DONGFENG), HONDA (GAC)

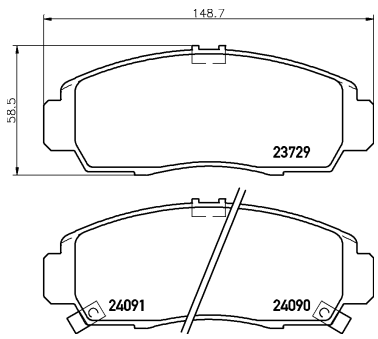

17

2373001

23730 173 0 5

BMW, BMW (BRILLIANCE), ROLLS-ROYCE

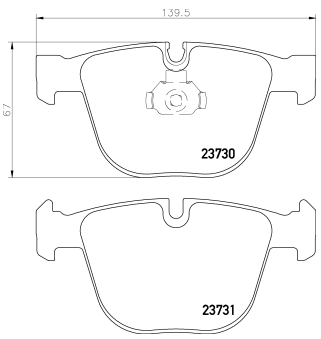

17.3

Illustrations

2373007

23730 171 0 5

BMW

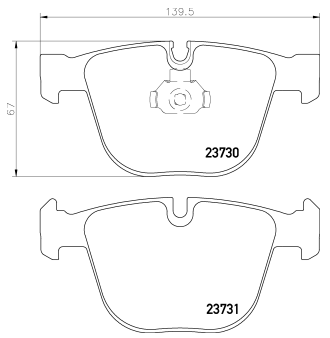

17.1

2373081

23730 173 0 5 epad

BMW, BMW (BRILLIANCE), ROLLS-ROYCE

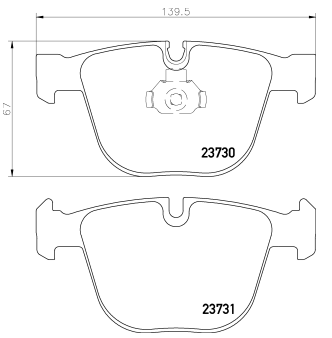

17.3

2373101

23731 169 0 5

ALPINA, BMW

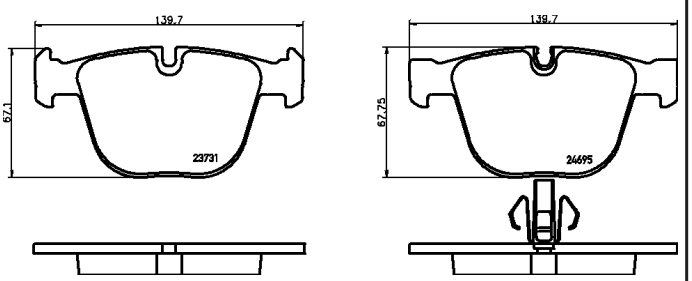

16.9

2373201

23732 173 0 5

BMW, BMW (BRILLIANCE)

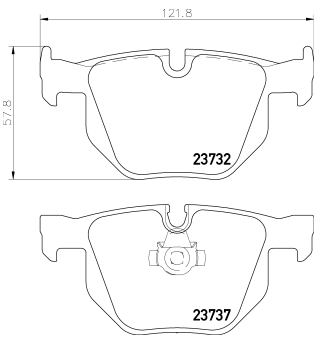

17.3

2373281

23732 173 0 5 epad

BMW, BMW (BRILLIANCE)

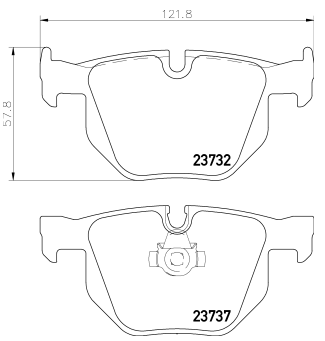

17.3

2373401

23734 170 0 4

LEXUS, TOYOTA

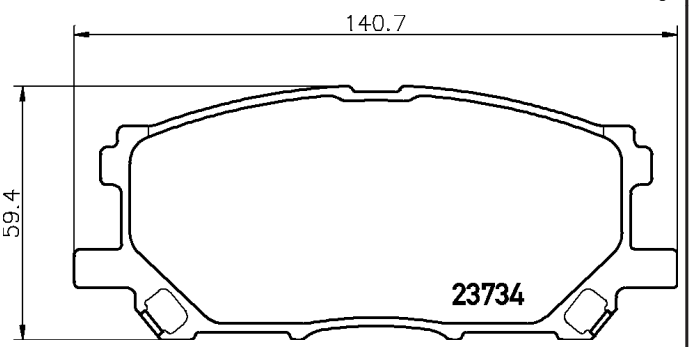

17

2373807

23738 206 0 5

CADILLAC, CHEVROLET, FIAT, HOLDEN, HSV, OPEL, SAAB, VAUXHALL

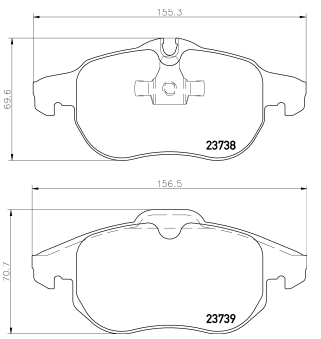

20.6

2374001

23740 155 0 5

CHRYSLER, DODGE, PLYMOUTH

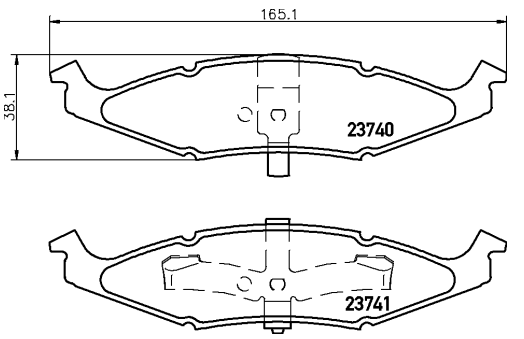

15.5

2374303

23743 205 2 5

MERCEDES-BENZ, MERCEDES-BENZ (BBDC)

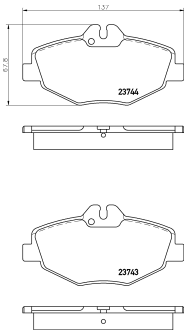

20.5

2374381

23743 205 2 5 epad

MERCEDES-BENZ, MERCEDES-BENZ (BBDC)

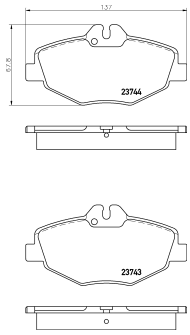

20.5

2374502

23745 177 0 5

MERCEDES-BENZ, MERCEDES-BENZ (BBDC)

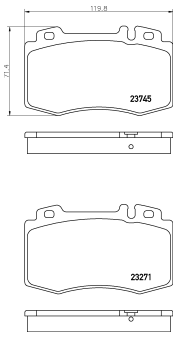

17.7

2374581

23745 177 0 5 epad

MERCEDES-BENZ, MERCEDES-BENZ (BBDC)

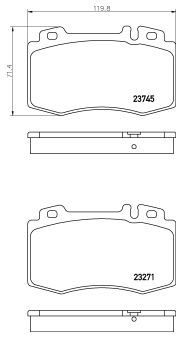

17.7

2374601

23746 180 0 5

VOLKSWAGEN

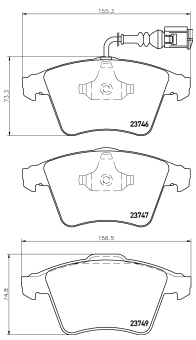

18

2374602

23746 201 0 5

VOLKSWAGEN

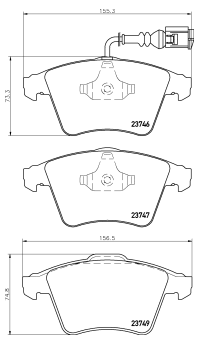

20.1

2374701

23747 180 0 5

VOLKSWAGEN

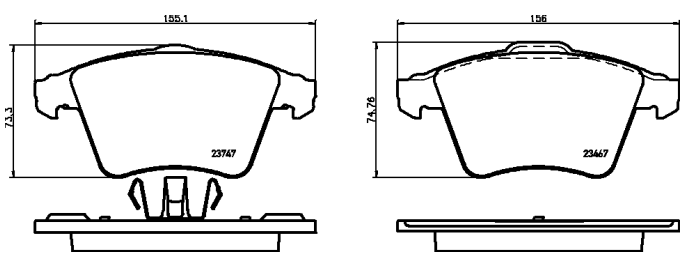

18

2374702

23747 201 0 5

VOLKSWAGEN

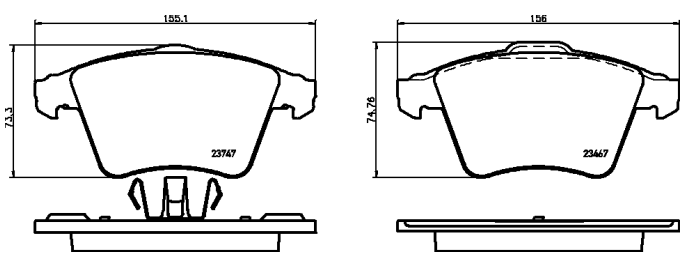

20.1

2374901

23749 188 0 5

VOLKSWAGEN

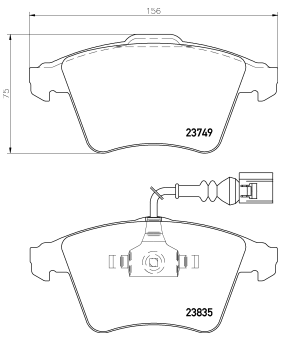

18.8

2375101

23751 167 0 5

AUDI, VOLKSWAGEN

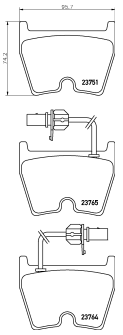

16.7

2375301

23753 180 0 5

PEUGEOT

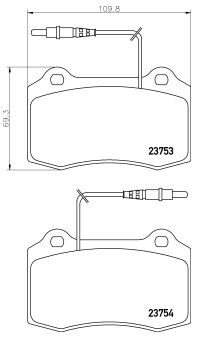

18

2375601

23756 157 0 5

ALFA ROMEO

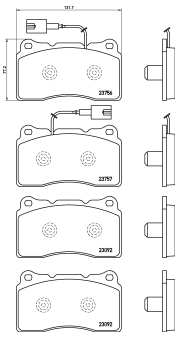

15.7

2375603

23756 160 0 5

ALFA ROMEO

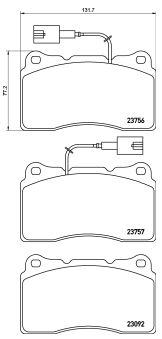

16

2375701

23757 160 0 5

ALFA ROMEO, LANCIA

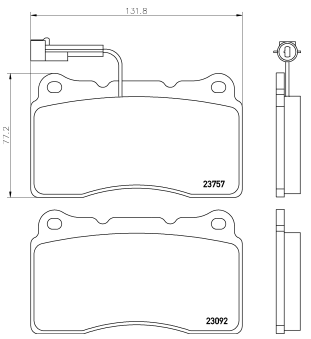

16

2375901

23759 170 0 4

TOYOTA

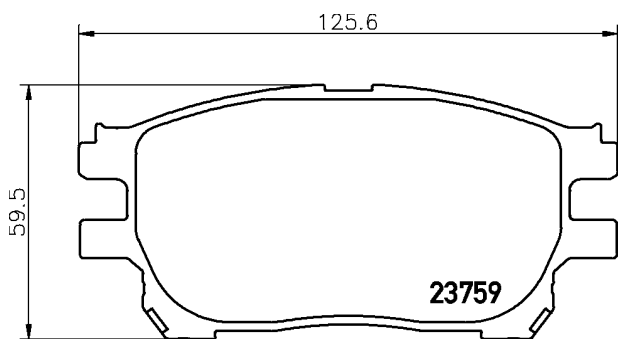

17

2376001

23760 178 1 4

ALFA ROMEO, LANCIA

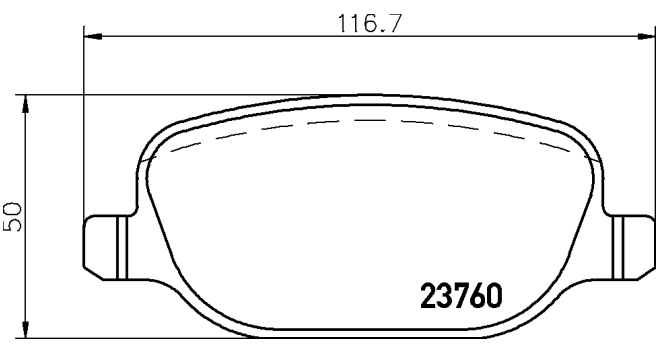

17.8

2376002

23760 178 2 4

ALFA ROMEO, LANCIA

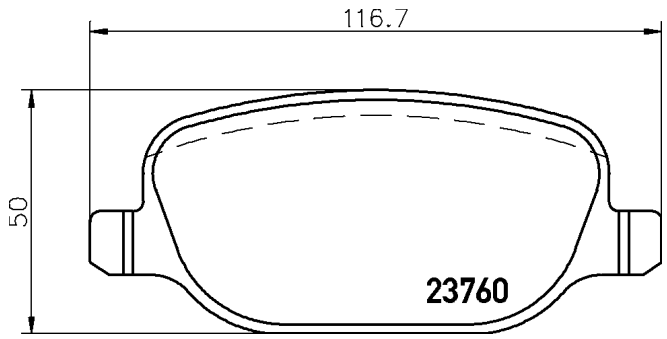

17.8

2376101

23761 188 1 4

LANCIA

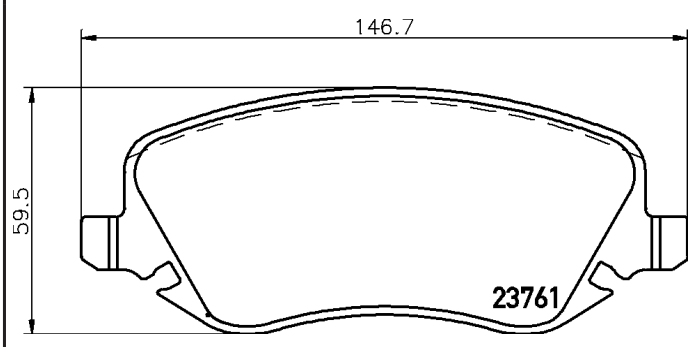

18.8

2376201

23762 204 0 5

AUDI

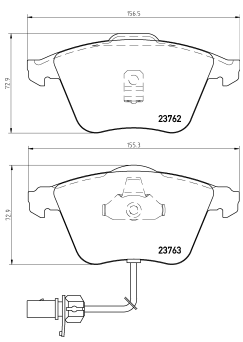

20.4

2376281

23762 204 0 5 epad

AUDI

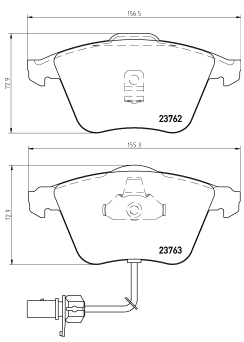

20.4

2376302

23763 203 0 5

AUDI, AUDI (FAW), SEAT

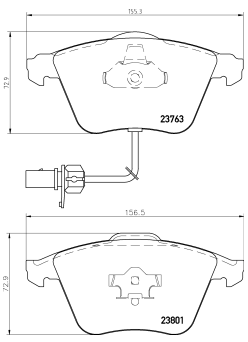

20.3

2376381

23763 203 0 5 epad

AUDI, AUDI (FAW), SEAT

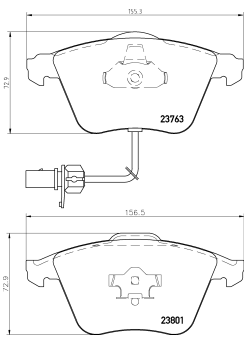

20.3

2376601

23766 178 0 5

TOYOTA

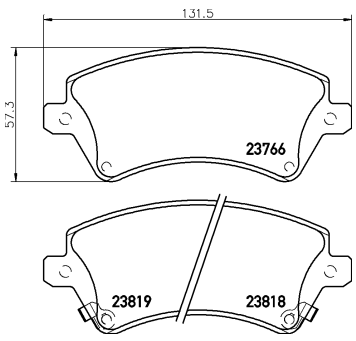

17.8

2376802

23768 190 1 5

TOYOTA

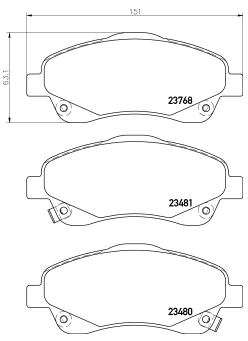

19

2377301

23773 175 0 5

AUDI

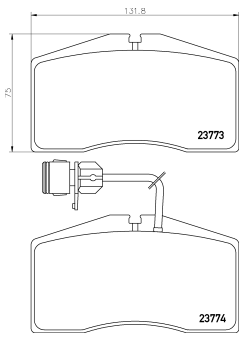

17.5

2377501

23775 180 0 5

FIAT, FIAT (NANJING)

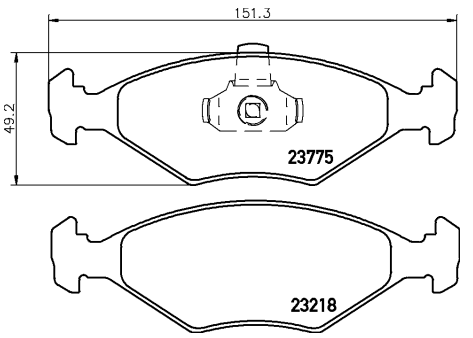

18

2377601

23776 180 0 5

FIAT

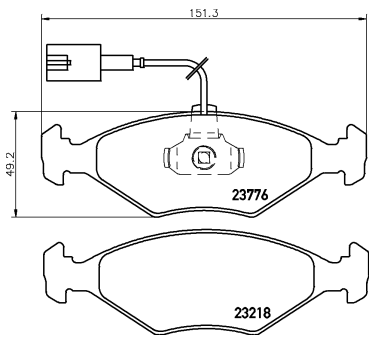

18

2377701

23777 150 0 5

MAZDA

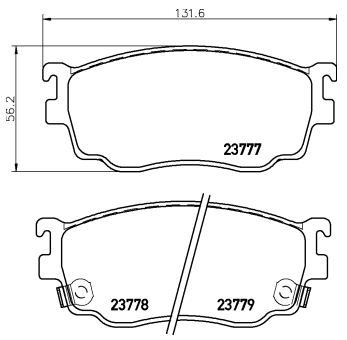

15

2378001

23780 170 0 5

SUBARU

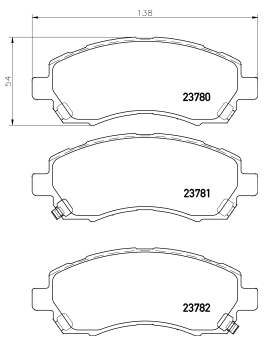

17

2378301

23783 138 0 4

DAIHATSU

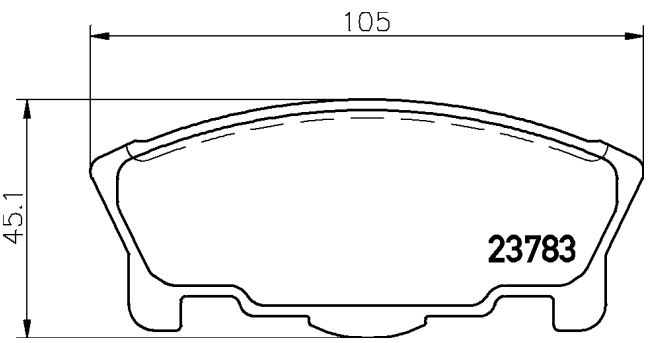

13.8

2378401

23784 155 0 5

ASIA MOTORS, KIA

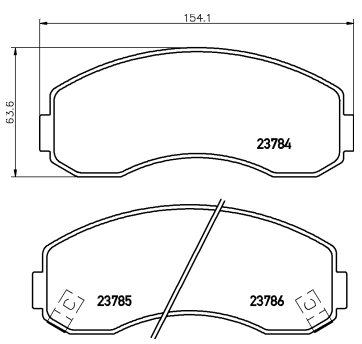

15.5

2378701

23787 183 0 5

FORD, FORD AUSTRALIA, FORD USA, MAZDA

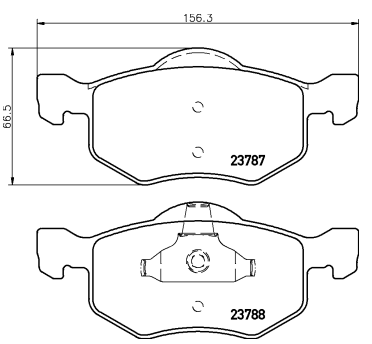

18.3

2379101

23791 208 0 5

BMW, ROLLS-ROYCE

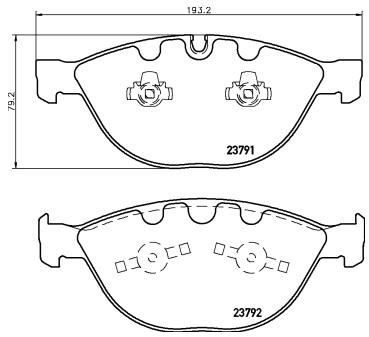

20.8

2379181

23791 208 0 5 epad

BMW, ROLLS-ROYCE

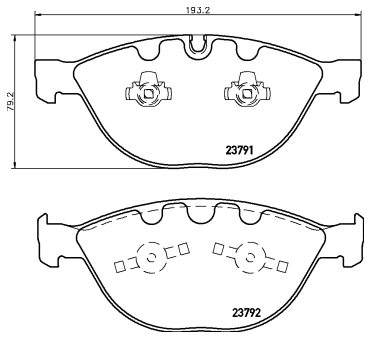

20.8

2379301

23793 203 0 5

BMW

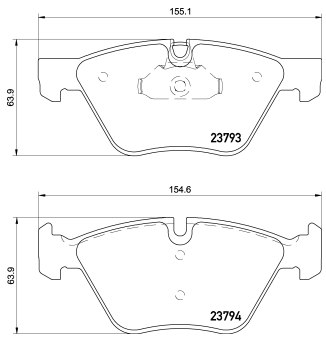

20.3

2379381

23793 203 0 5 epad

BMW

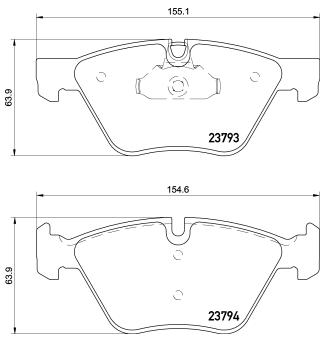

20.3

2379401

23794 203 0 5

BMW, BMW (BRILLIANCE)

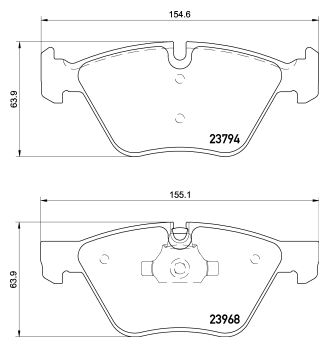

20.3

2379481

23794 203 0 5 epad

BMW, BMW (BRILLIANCE)

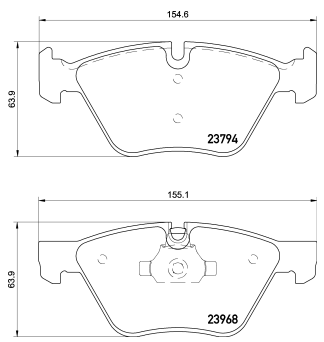

20.3

2379501

23795 150 0 5

SUZUKI

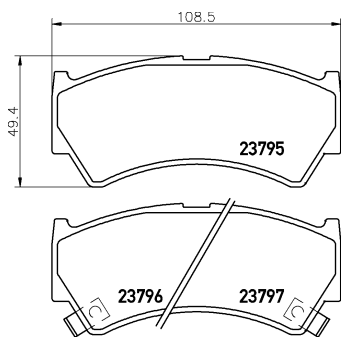

15

2380101

23801 204 0 5

AUDI, SEAT, SKODA, VOLKSWAGEN

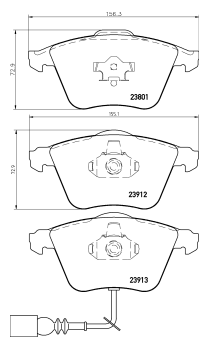

20.3

Illustrations

2380181

23801 204 0 5 epad

AUDI, SEAT, SKODA, VOLKSWAGEN

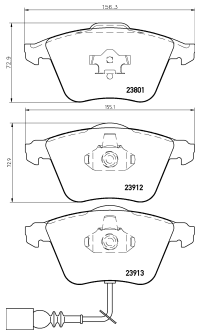

20.3

2380401

23804 150 0 4

LEXUS

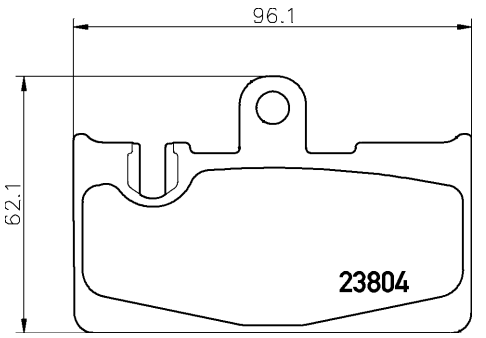

15

2380701

23807 185 0 5

CHRYSLER

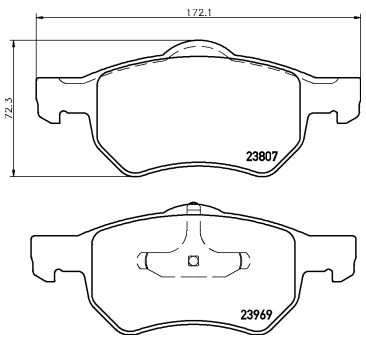

18.5

2381101

23811 178 1 5

ALFA ROMEO

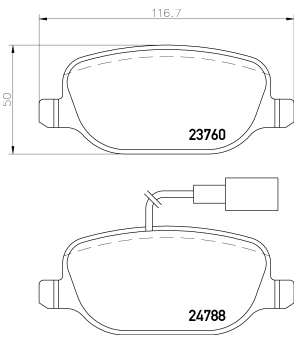

17.8

2381301

23813 158 0 5

HAWTAI, HYUNDAI, HYUNDAI (HUATAI), LANDWIND (JMC)

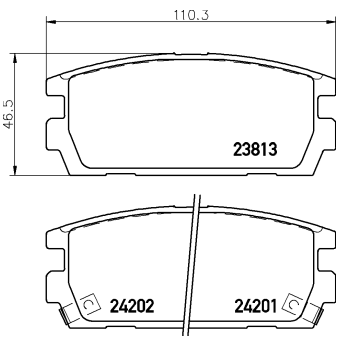

15.8

2381601

23816 158 1 4

TOYOTA

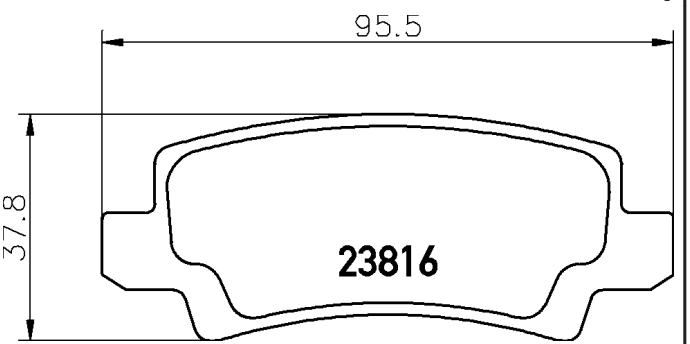

15.8

2381701

23817 170 0 5

SUZUKI

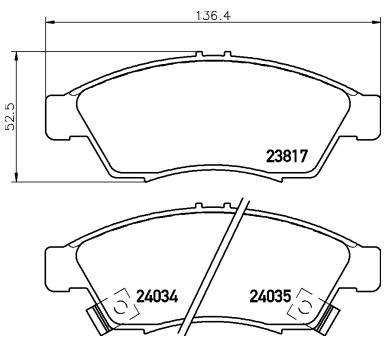

17

2382201

23822 204 0 5

BENTLEY

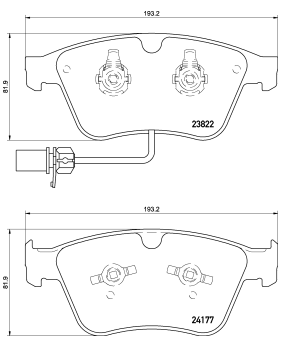

20.4

2382301

23823 172 1 5

SEAT, VOLKSWAGEN

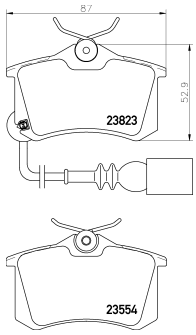

17.2

2383201

23832 196 0 5

CHEVROLET, HOLDEN, OPEL, VAUXHALL

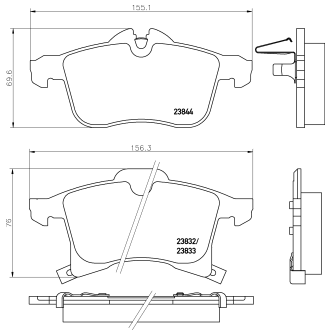

19.6

2383281

23832 196 0 5 epad

CHEVROLET, HOLDEN, OPEL, VAUXHALL

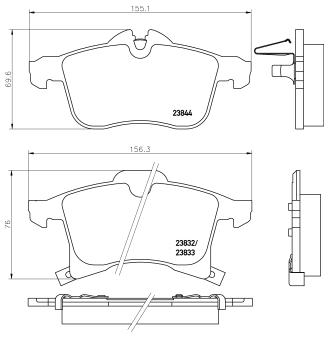

19.6

2383601

23836 167 1 4

TOYOTA

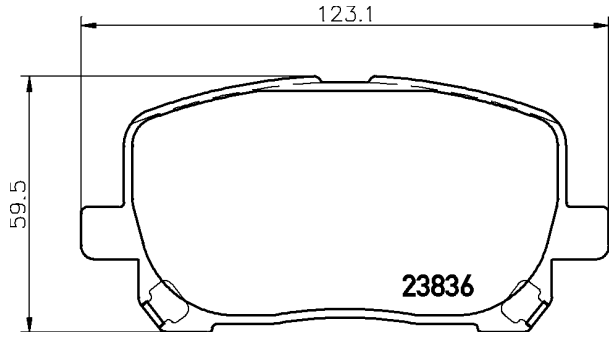

16.7

2384201

23842 180 0 5

FIAT

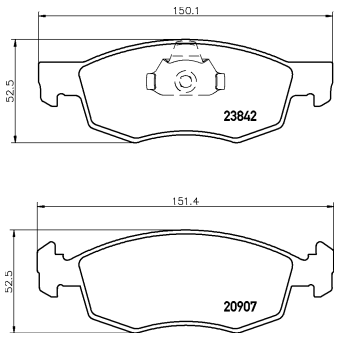

18

2384504

23845 154 1 5

EUNOS, FORD AUSTRALIA, HAIMA (FAW), MAZDA, MAZDA (HAINAN)

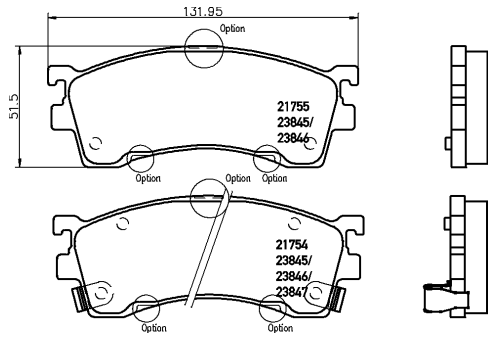

16.5

2385501

23855 160 0 4

LEXUS, TOYOTA

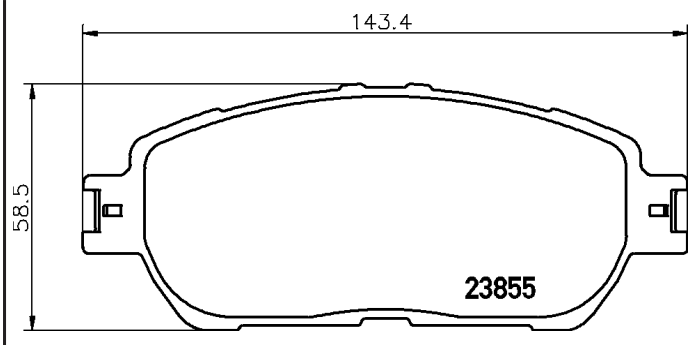

16

2386301

23863 150 0 4

MAZDA

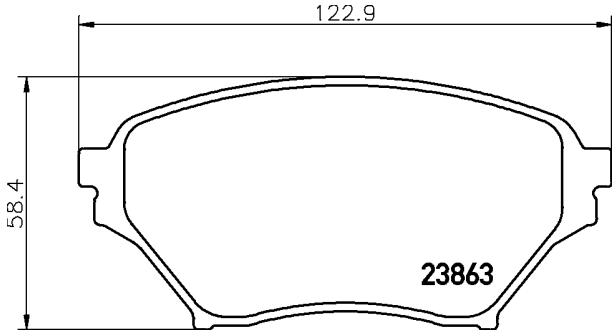

15

2386401

23864 170 0 4

TOYOTA, TOYOTA (FAW)

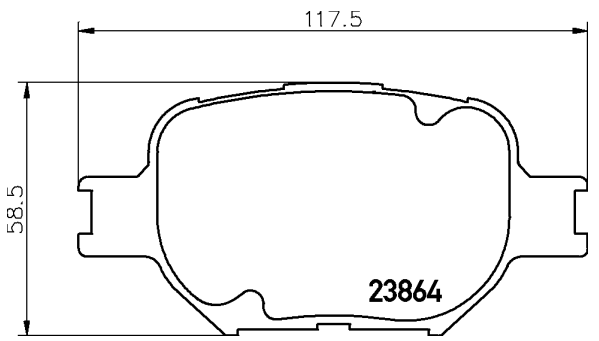

17

2386501

23865 164 0 5

CHEVROLET, SAAB, SUBARU

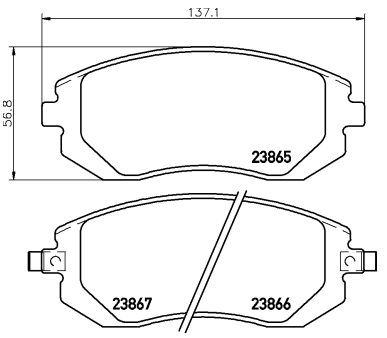

16.4

2386801

23868 169 0 5

HONDA, HONDA (DONGFENG)

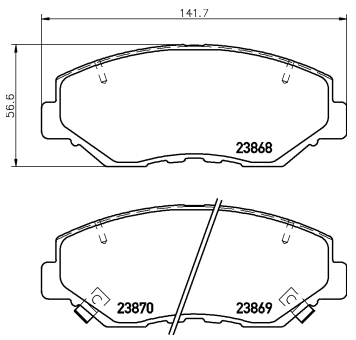

16.9

2387101

23871 138 0 5

INFINITI, NISSAN, NISSAN (DONGFENG), RENAULT, RENAULT SAMSUNG, SUZUKI

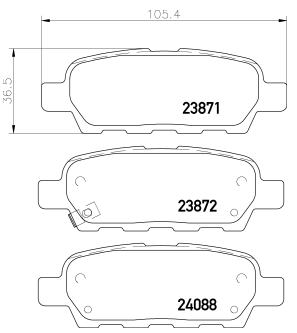

13.8

2387301

23873 150 0 5

KIA

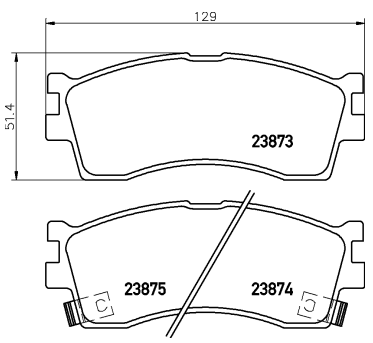

15

2387601

23876 120 0 5

MAZDA

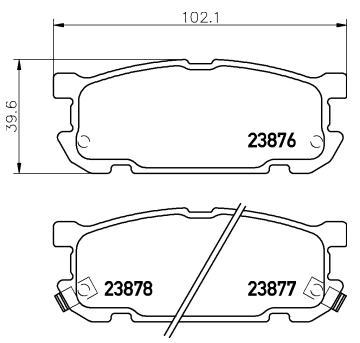

12

2387902

23879 155 0 5

MITSUBISHI

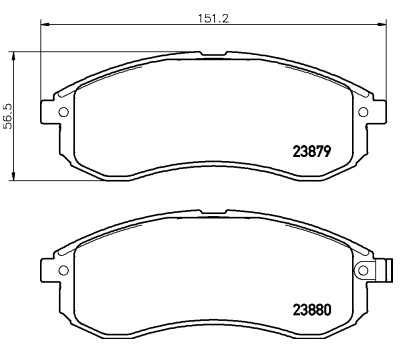

15.5

2388101

23881 201 1 5

MERCEDES-BENZ

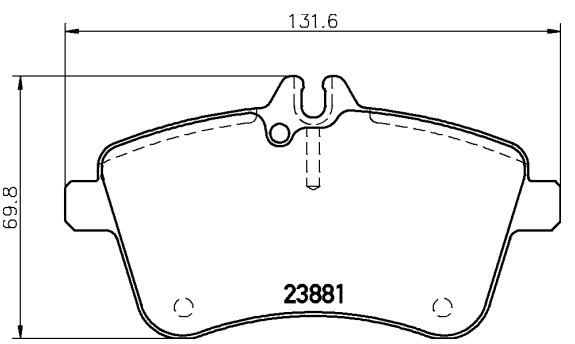

20.1

2388501

23885 205 0 5

AUDI

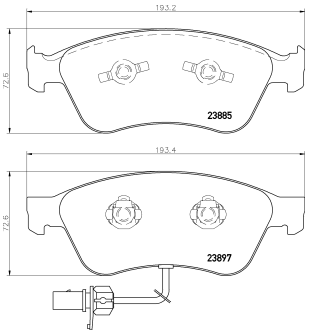

20.5

2389101

23891 169 0 5

HYUNDAI, HYUNDAI (BEIJING), KIA, KIA (DYK)

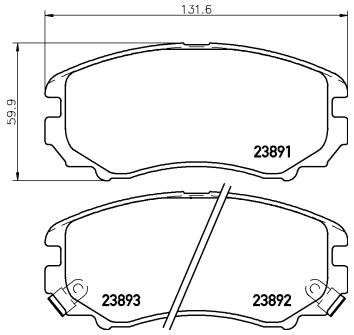

16.9

2389105

23891 178 1 5

HYUNDAI, KIA

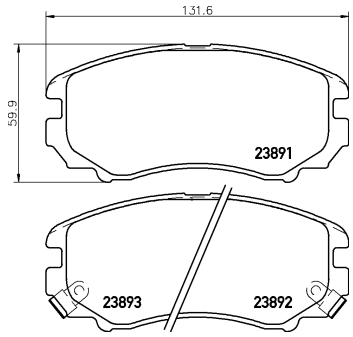

17.8

2389601

23896 204 0 5

AUDI, VOLKSWAGEN

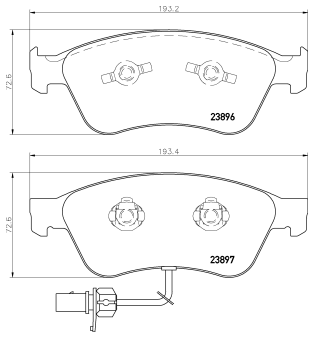

20.5

2390101

23901 188 1 5

MERCEDES-BENZ, PUCH, VOLKSWAGEN

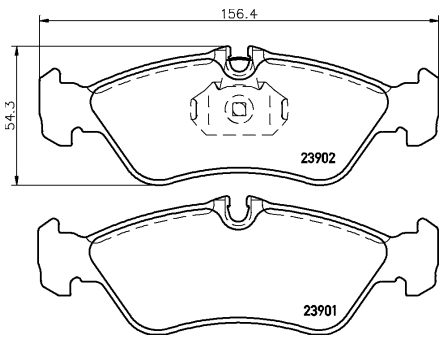

18.8

2390401

23904 166 0 5

BYD, FAW TIANJIN, GEELY, GREAT WALL, LIFAN, TOYOTA, TOYOTA (FAW)

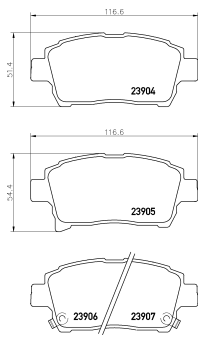

16.6

2390801

23908 178 1 4

JAGUAR

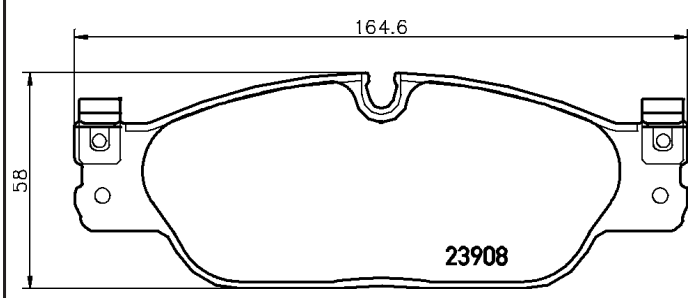

17.8

2391201

23912 185 0 5

FORD, FORD AUSTRALIA, MAZDA, SAAB, VOLVO, VOLVO (CHANGAN)

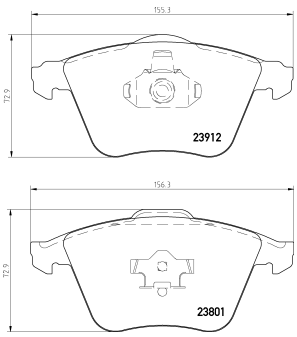

18.5

2391202

23912 204 0 5

CHEVROLET, OPEL, VAUXHALL

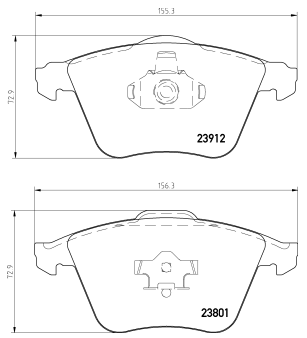

20.4

2391301

23913 203 0 5

AUDI, SEAT, VOLKSWAGEN

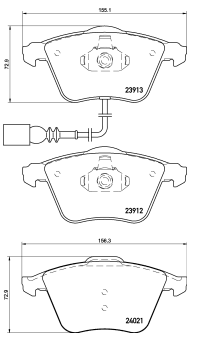

20.3

2391401

23914 172 1 4

AUDI, AUDI (FAW), SEAT, SKODA, VOLKSWAGEN

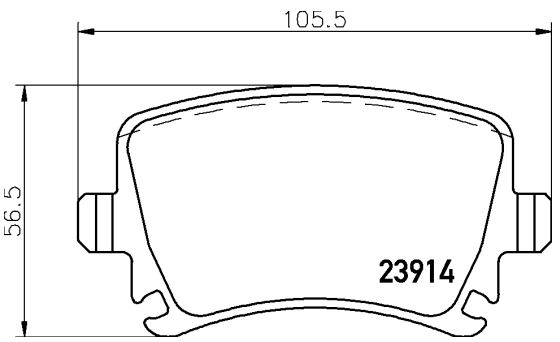

17.2

2391402

23914 172 2 4

AUDI, SKODA, VOLKSWAGEN

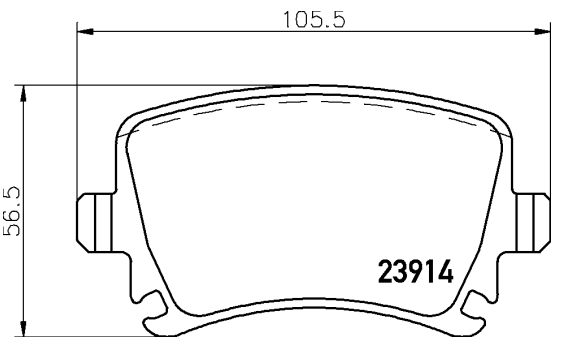

17.2

2391481

23914 172 1 4 epad

AUDI, AUDI (FAW), SEAT, SKODA, VOLKSWAGEN

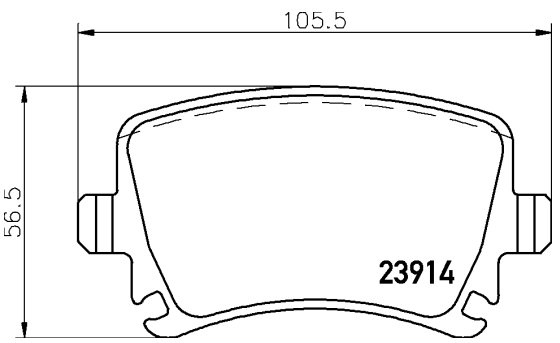

17.2

2391482

23914 172 2 4 epad

AUDI, SKODA, VOLKSWAGEN

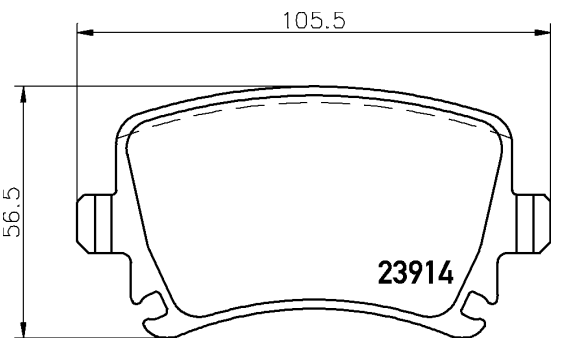

17.2

2391503

23915 178 1 5

BMW

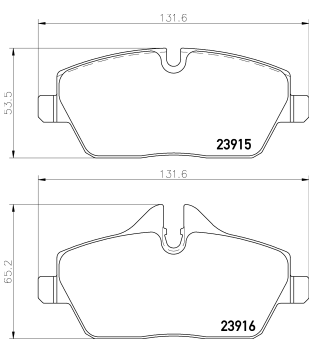

17.8

2391601

23916 178 1 5

MINI

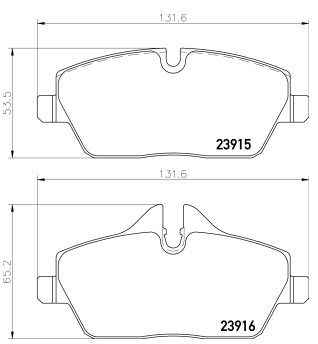

17.8

2391701

23917 191 1 5

CITROËN, FIAT, PEUGEOT

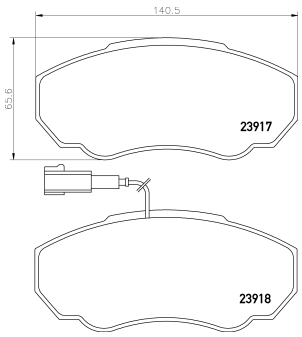

19.1

2391901

23919 191 1 5

CITROËN, FIAT, PEUGEOT

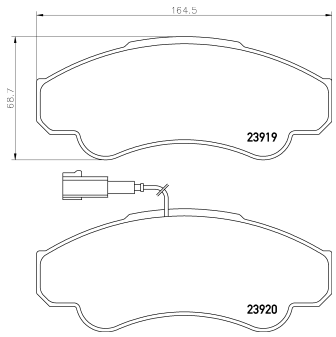

19.1

2392101

23921 201 1 4

CITROËN, FIAT, PEUGEOT

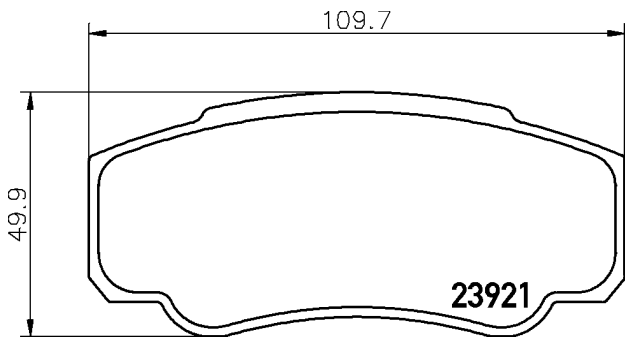

20.1

2392103

23921 201 1 5

NISSAN, RENAULT TRUCKS

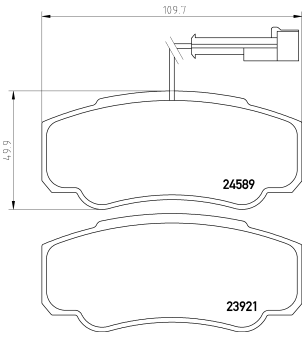

20.1

2392201

23922 210 0 5

MERCEDES-BENZ

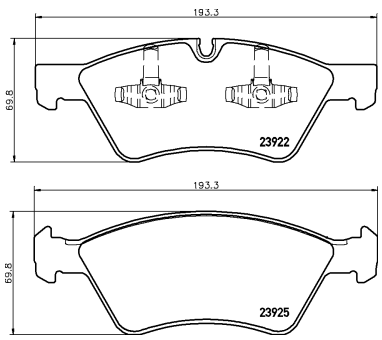

21

2392281

23922 210 0 5 epad

MERCEDES-BENZ

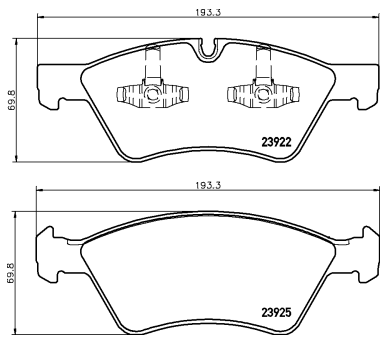

21

2392301

23923 180 0 5 T4264

MERCEDES-BENZ

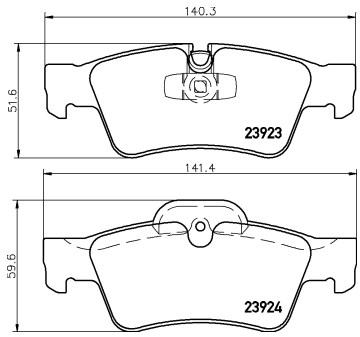

18

2392302

23923 180 0 5 T4564

MERCEDES-BENZ

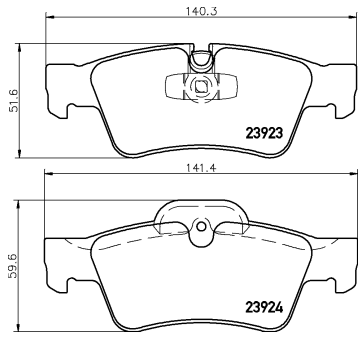

18

2392381

23923 180 0 5 epad

MERCEDES-BENZ

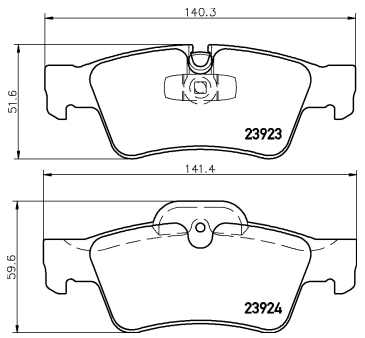

18

2392701

23927 173 0 5

BMW, BMW (BRILLIANCE)

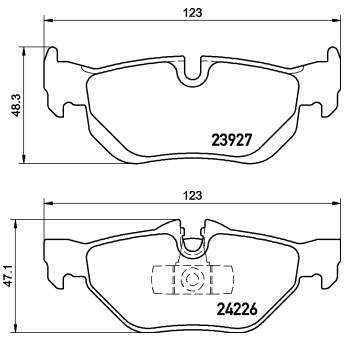

17.3

2392781

23927 173 0 5 epad

BMW, BMW (BRILLIANCE)

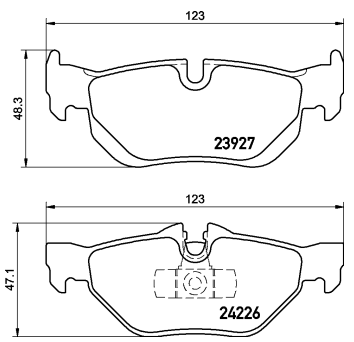

17.3

2392801

23928 170 0 4

HONGQI, TOYOTA

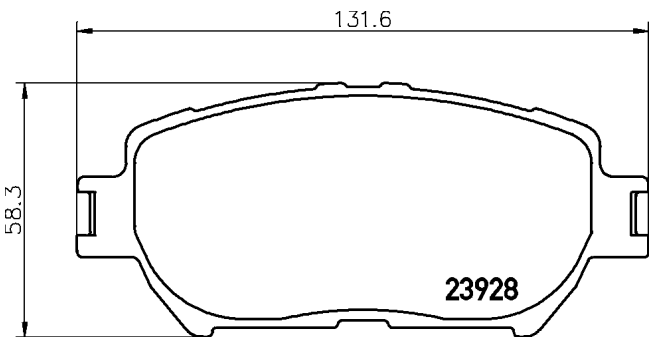

17

2392901

23929 170 0 4

LEXUS

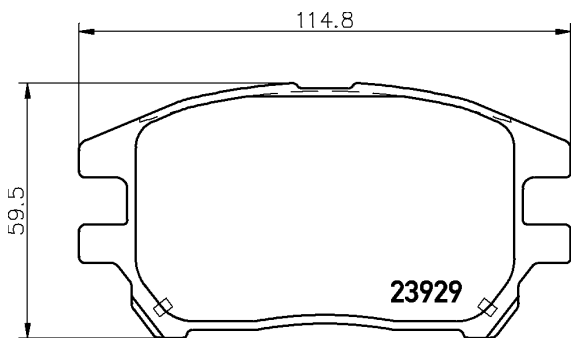

17

2393001

23930 181 1 4

RENAULT

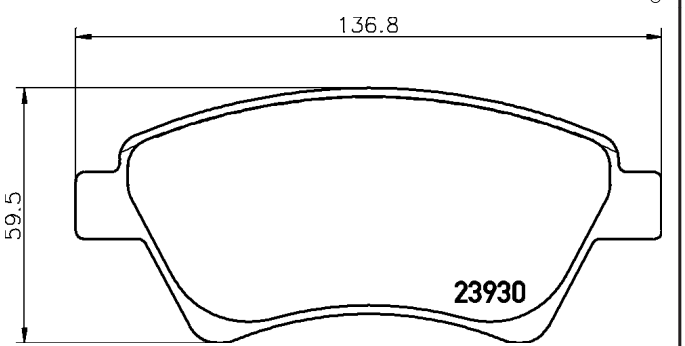

18.1

2393101

23931 150 0 5

KIA, SSANGYONG

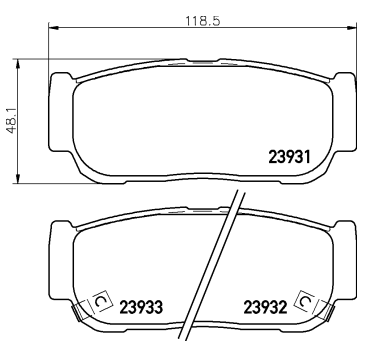

15

2393401

23934 181 1 4

RENAULT

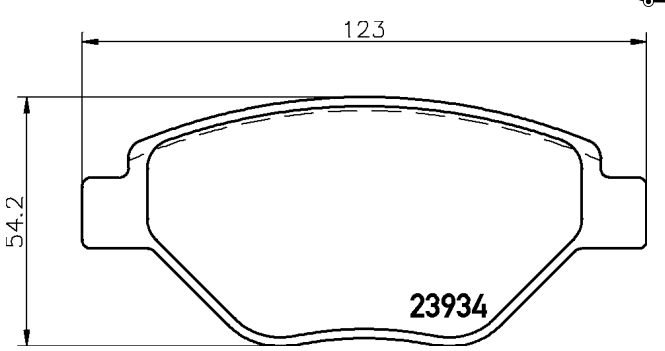

18.1

2393501

23935 178 0 5

BMW, BMW (BRILLIANCE)

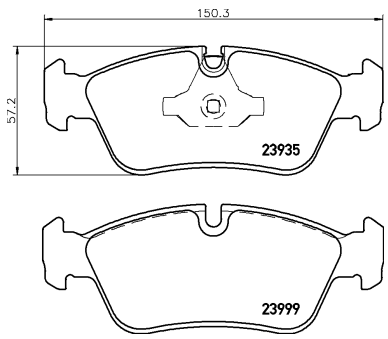

17.8

2393581

23935 178 0 5 epad

BMW, BMW (BRILLIANCE)

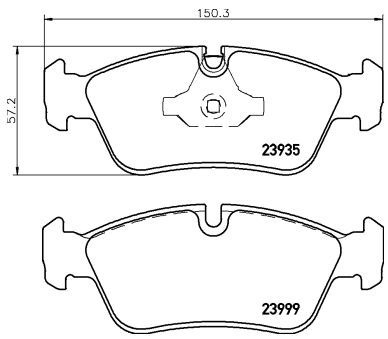

17.8

2394301

23943 175 0 5

MERCEDES-BENZ

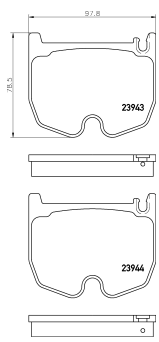

17.5

2394501

23945 165 0 4

MERCEDES-BENZ

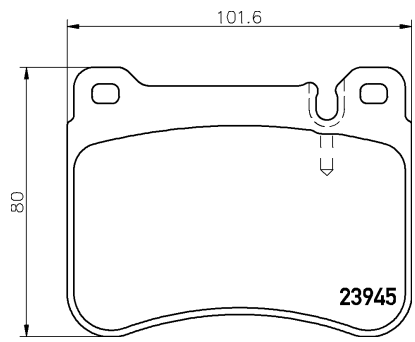

16.5

2395001

23950 203 0 5

AUDI, AUDI (FAW)

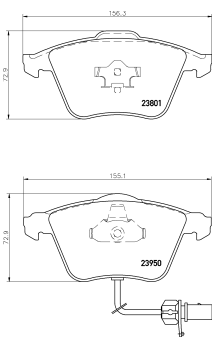

20.3

2395081

23950 203 0 5 epad

AUDI, AUDI (FAW)

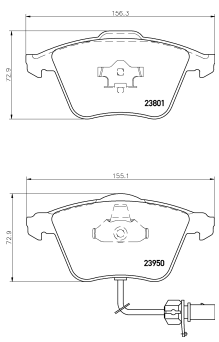

20.3

2395101

23951 205 0 5

CHRYSLER

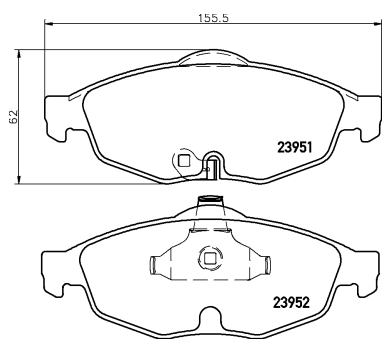

20.5

2395401

23954 190 1 4

CITROËN, CITROËN (DF-PSA), PEUGEOT

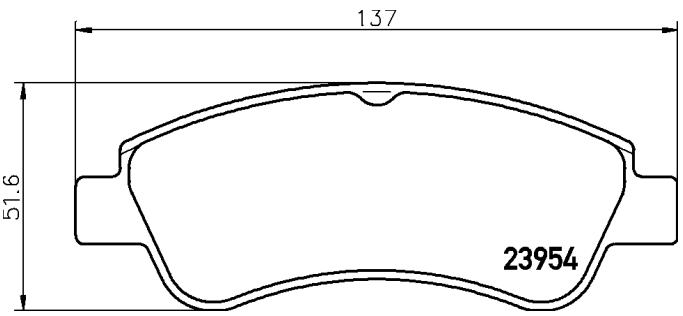

19

Illustrations

2395501

23955 175 0 4

MERCEDES-BENZ

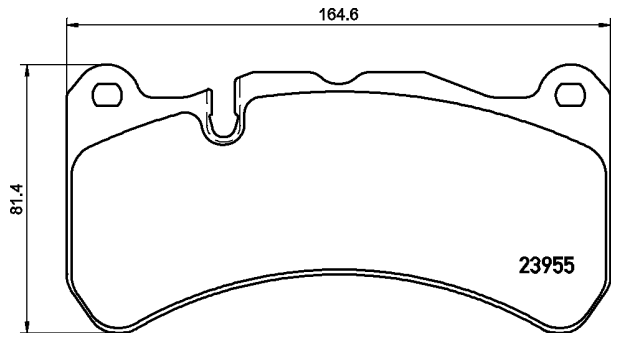

17.5

2395901

23959 175 1 4

CITROËN, PEUGEOT, TOYOTA

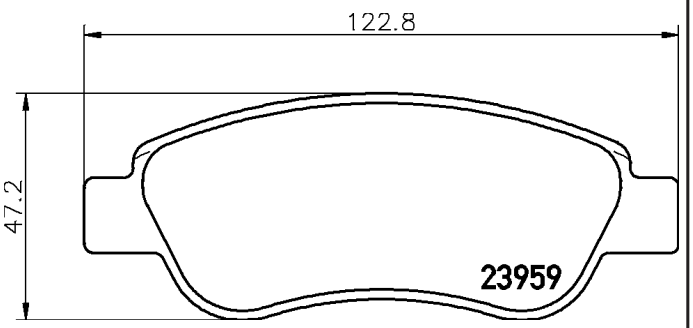

17.5

2396001

23960 178 0 4

MERCEDES-BENZ

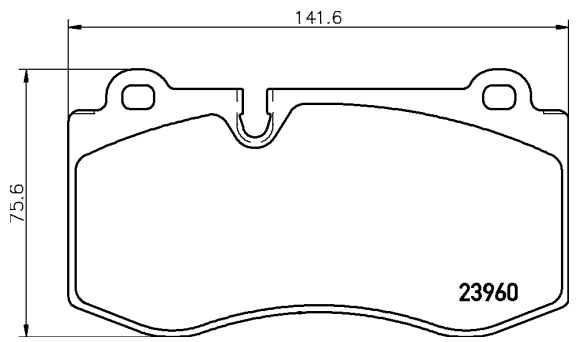

17.8

2396081

23960 178 0 4 epad

MERCEDES-BENZ

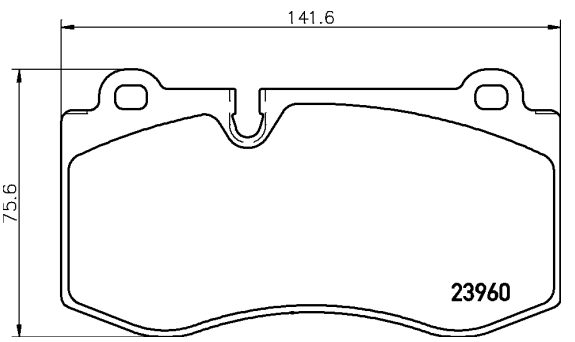

17.8

2396101

23961 170 0 4

PORSCHE

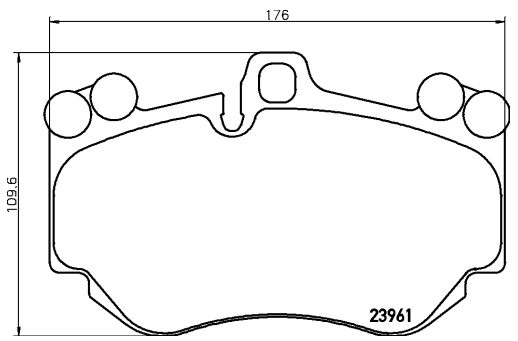

17

2396201

23962 155 1 5

SUZUKI

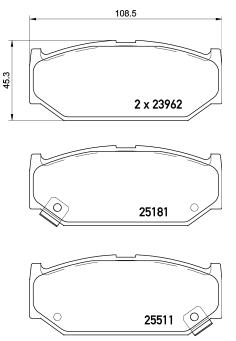

15.5

2396302

23963 155 0 5

SUZUKI

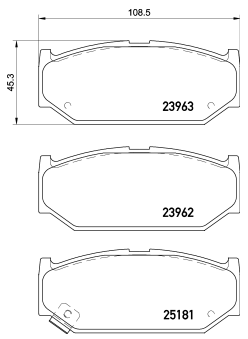

15.5

2396601

23966 164 0 5

HYUNDAI, HYUNDAI (BEIJING), KIA, KIA (DYK)

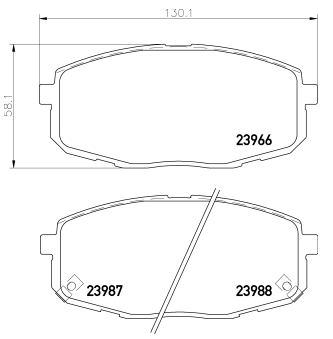

16.4

2396701

23967 152 0 4

LEXUS, TOYOTA

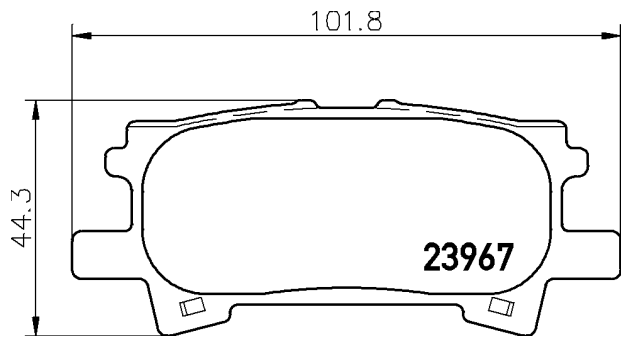

15.2

2397001

23970 170 0 5

NISSAN, NISSAN (DONGFENG), NISSAN (ZHENGZHOU)

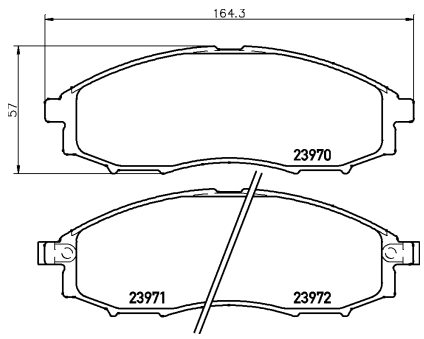

17

2397301

23973 173 1 4

DACIA, MERCEDES-BENZ, NISSAN, RENAULT

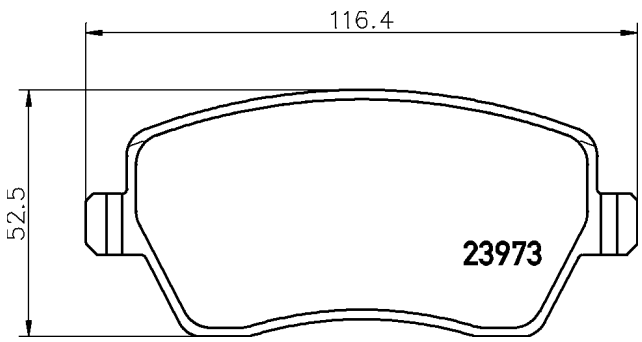

17.3

2397302

23973 173 1 5

OPEL, SUZUKI, VAUXHALL

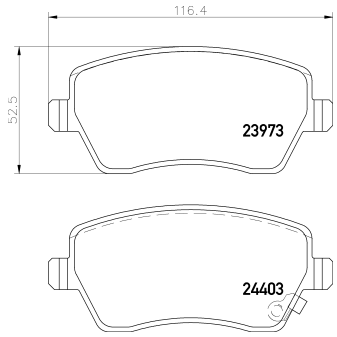

17.3

2397401

23974 178 0 4

CHEVROLET, CHEVROLET (SGM), DAEWOO, HOLDEN, PROTON

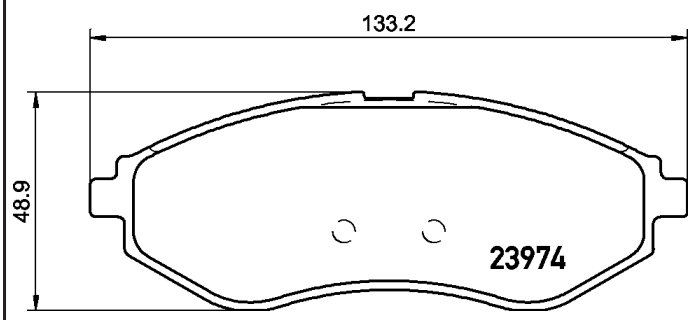

17.8

2397406

23974 178 0 5

CHEVROLET, CHEVROLET (SGM), DAEWOO, HOLDEN, PROTON

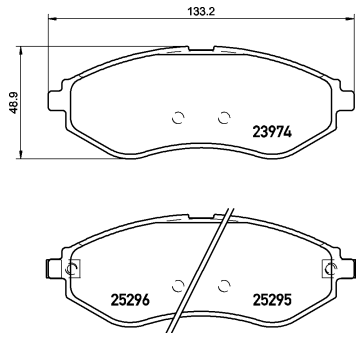

17.8

2397501

23975 168 0 5

CHEVROLET

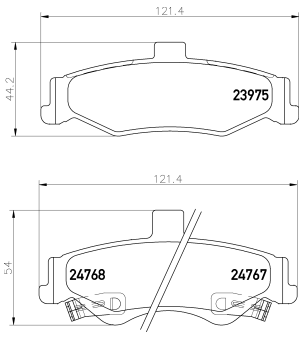

16.8

2397601

23976 160 0 4

CHEVROLET, LADA

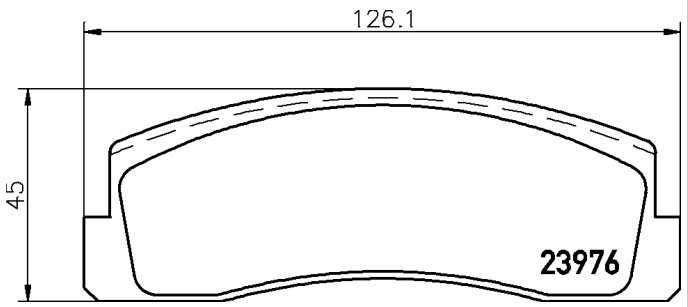

16

2397901

23979 178 1 5

ALFA ROMEO, FIAT

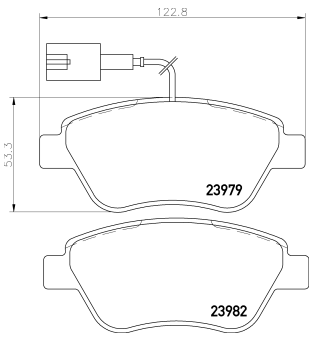

17.8

2397903

23979 178 2 5

CITROËN, FIAT, PEUGEOT

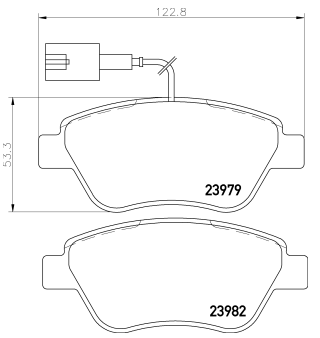

17.8

2398001

23980 170 1 4

NISSAN, OPEL, RENAULT, VAUXHALL

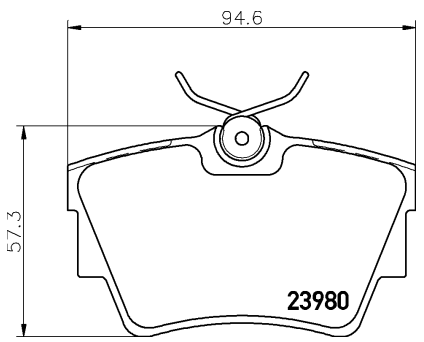

17

2398101

23981 192 1 5

OPEL, VAUXHALL

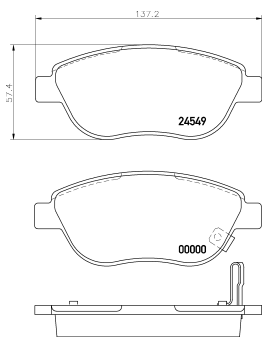

19.2

2398202

23982 178 1 5

OPEL, VAUXHALL

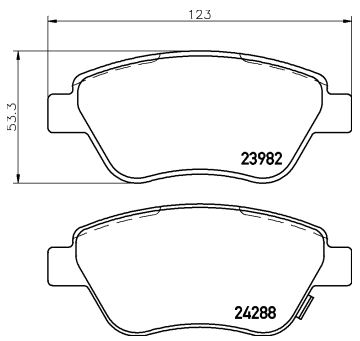

17.8

2398301

23983 178 0 4

LEXUS

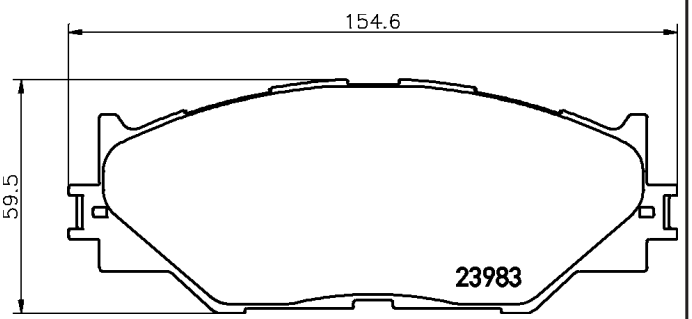

17.8

2398401

23984 180 1 5

MINI

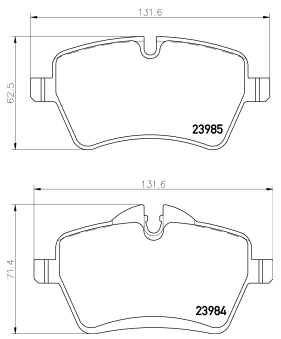

18

2398404

23984 180 2 5

MINI

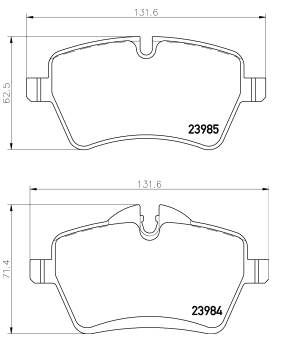

18

2399002

23990 207 1 5

MERCEDES-BENZ, VOLKSWAGEN

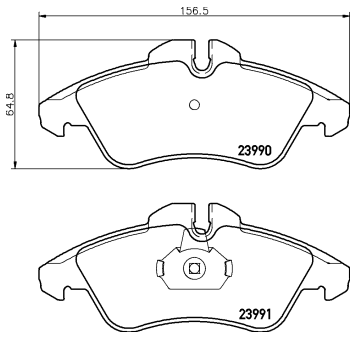

20.7

2399401

23994 148 0 4

CHEVROLET, CHEVROLET (SGM), DAEWOO

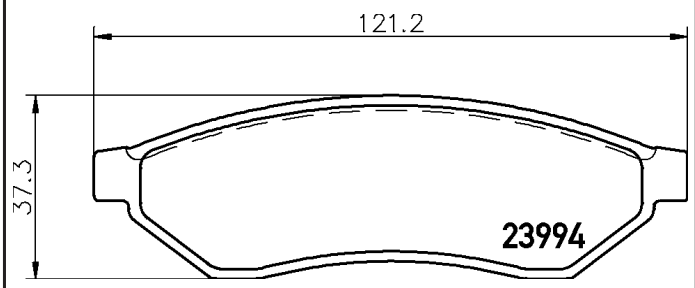

14.8

2399601

23996 183 0 5

TOYOTA

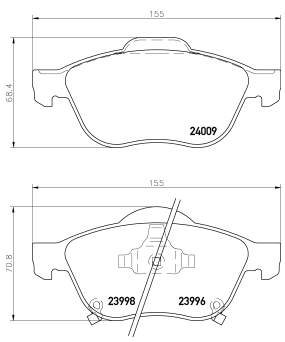

18.3

2400201

24002 188 0 5

MAZDA

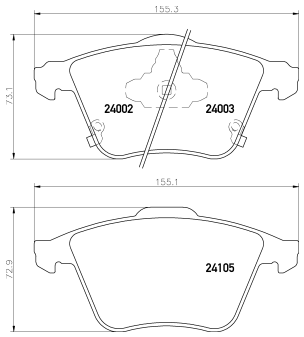

18.8

2400701

24007 202 1 4

MERCEDES-BENZ, MERCEDES-BENZ (FJDA)

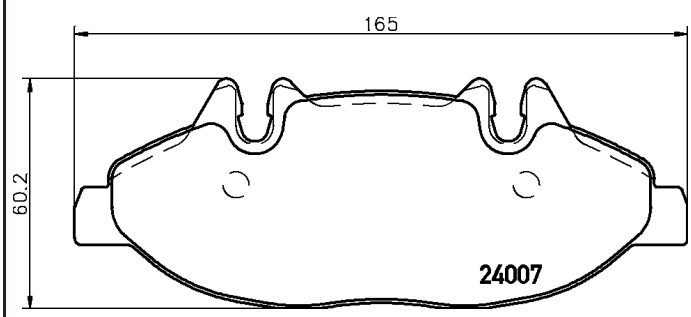

20.2

2400801

24008 177 1 4

MERCEDES-BENZ, MERCEDES-BENZ (FJDA)

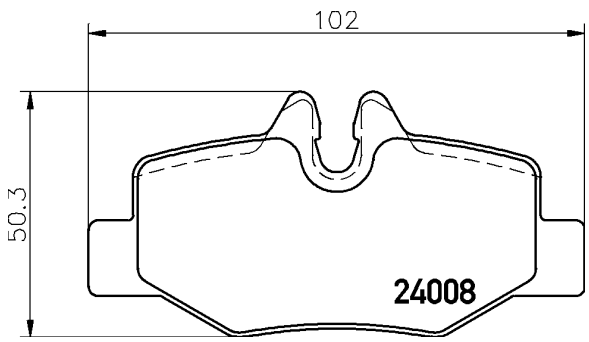

17.7

2401001

24010 167 0 4

AUDI, PORSCHE

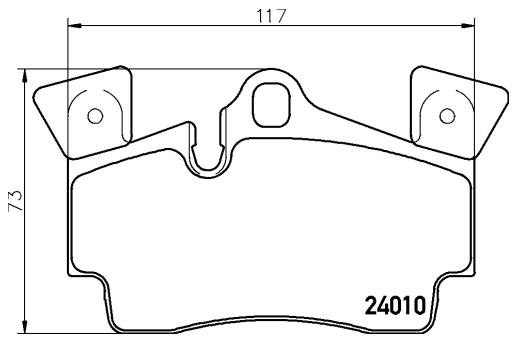

16.7

2401101

24011 177 0 5

VOLVO

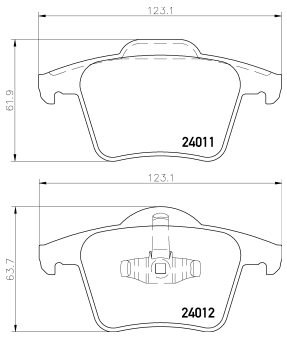

17.7

2401301

24013 150 1 5

TOYOTA

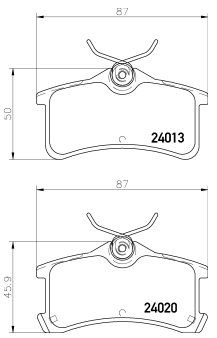

15

2401401

24014 154 1 5

CHRYSLER, DODGE, JEEP, MITSUBISHI, MITSUBISHI (BBDC)

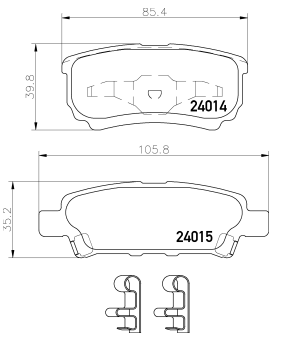

15.4

2402201

24022 177 0 5

DAIHATSU, TOYOTA

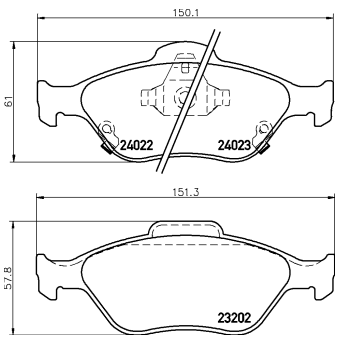

17.7

2402401

24024 178 0 5 T4361

LEXUS, MITSUBISHI, TOYOTA, TOYOTA (FAW)

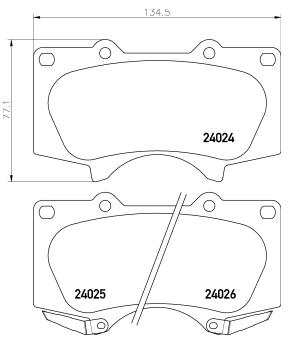

17.8

2402403

24024 170 0 5 T4146

LEXUS, TOYOTA

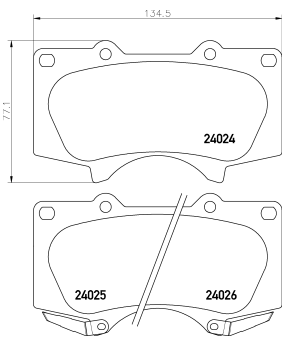

17

2402901

24029 126 0 5

MAZDA

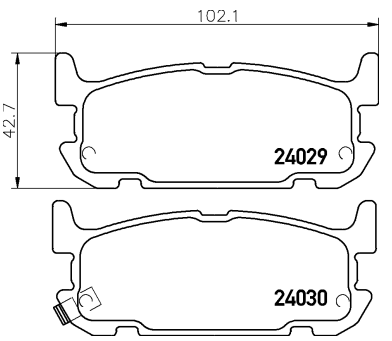

12.6

2403101

24031 168 0 5

HYUNDAI, HYUNDAI (BEIJING)

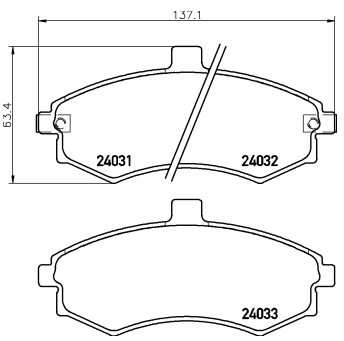

16.8

2403601

24036 160 0 5

CHRYSLER, DODGE

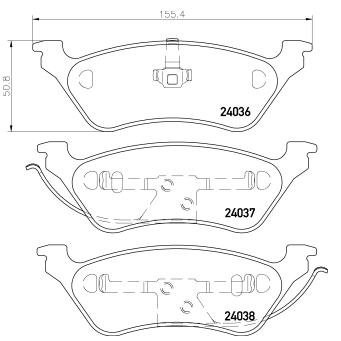

16

2403901

24039 144 0 5

MAZDA, NISSAN (DONGFENG)

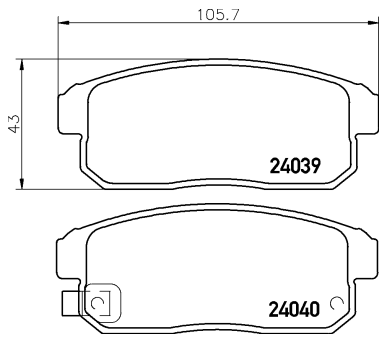

14.4

2404001

24040 144 0 5

CHEVROLET, SUZUKI

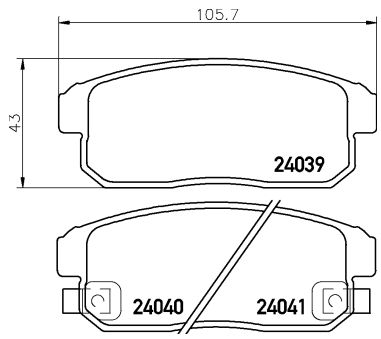

14.4

2404201

24042 163 0 4

MAZDA

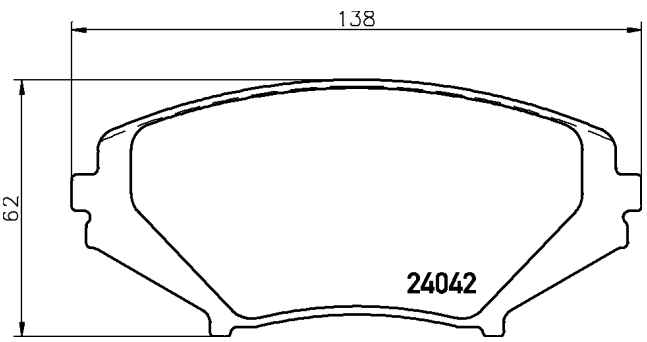

16.3

2404301

24043 163 0 5

MINI

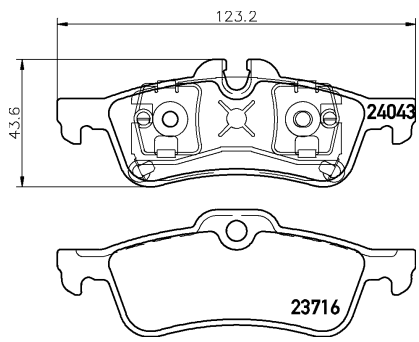

16.3

2404381

24043 163 0 5 epad

MINI

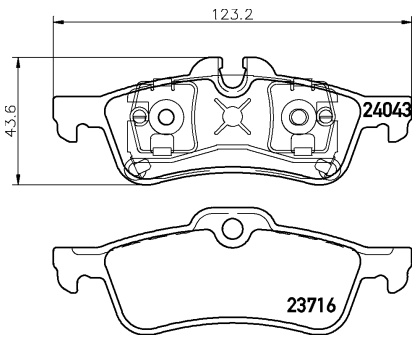

16.3

2404501

24045 130 0 4

HAIMA (FAW), MAZDA, MAZDA (HAINAN)

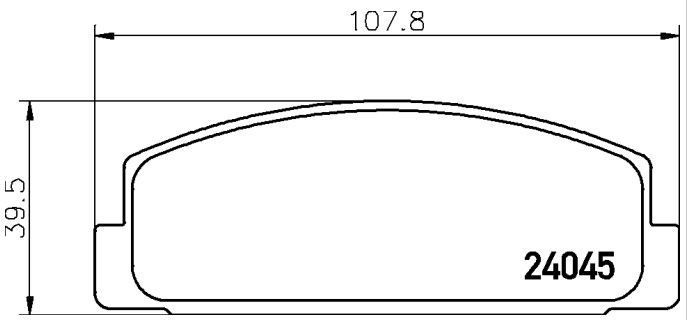

13

2404601

24046 182 0 5

MAZDA

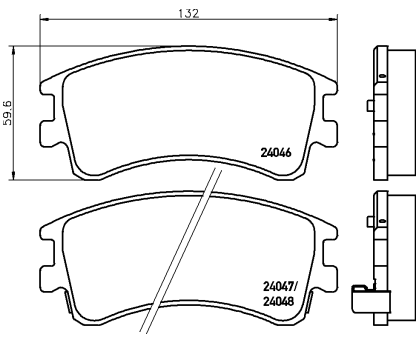

18.2

2404901

24049 170 0 4 T4045

PORSCHE

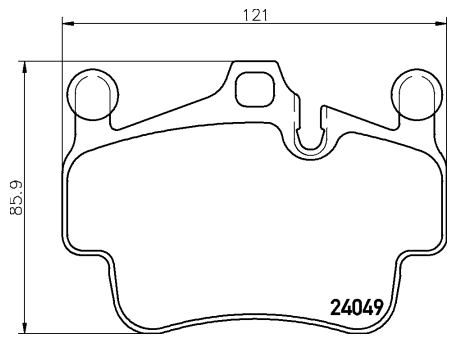

17

2404903

24049 170 0 4 T4997

PORSCHE

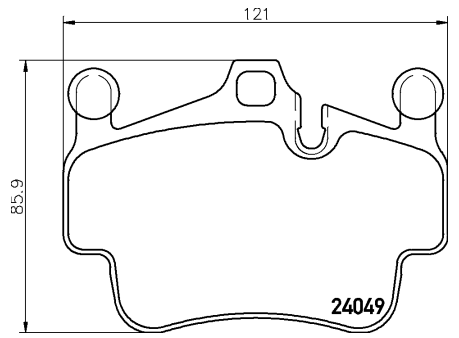

17

2405001

24050 152 0 5

DAEWOO, SSANGYONG

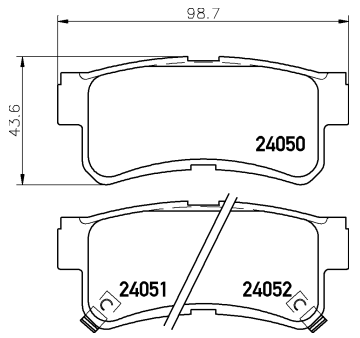

15.2

2405301

24053 169 0 5

HONDA, HONDA (GAC)

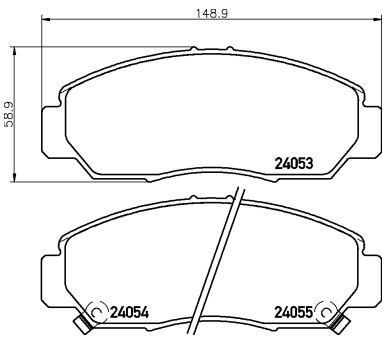

16.9

2405601

24056 155 0 5

INFINITI, NISSAN

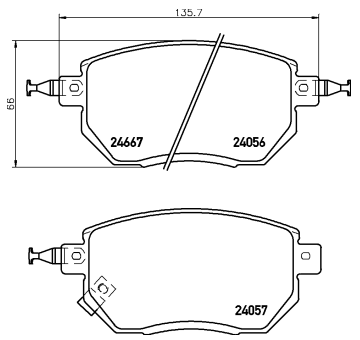

15.5

2405801

24058 158 0 5

KIA

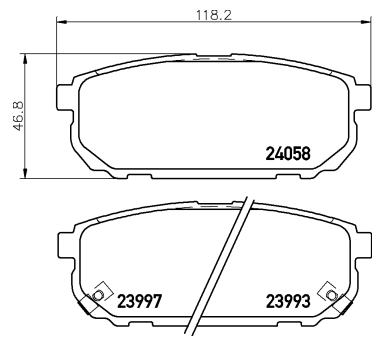

15.8

2405901

24059 166 0 5

HYUNDAI

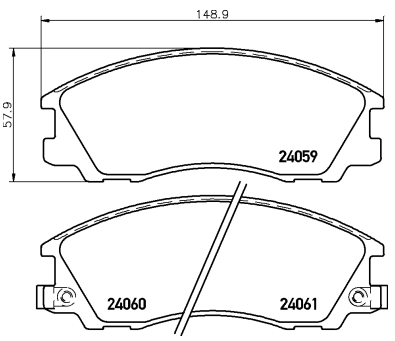

16.6

2406201

24062 176 0 5

CHEVROLET, CHEVROLET (SGM), DAEWOO, HOLDEN

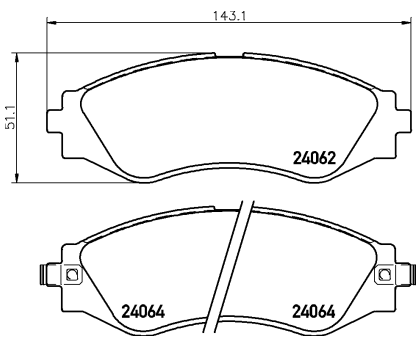

17.6

2406801

24068 173 0 5

KIA

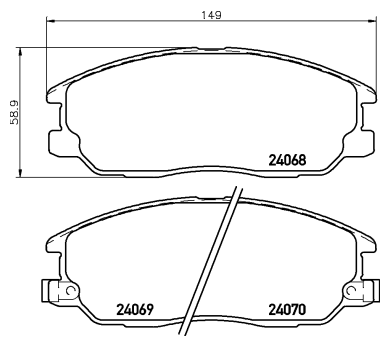

17.3

2407101

24071 146 0 4

BUICK, CHEVROLET, DAEWOO, HOLDEN

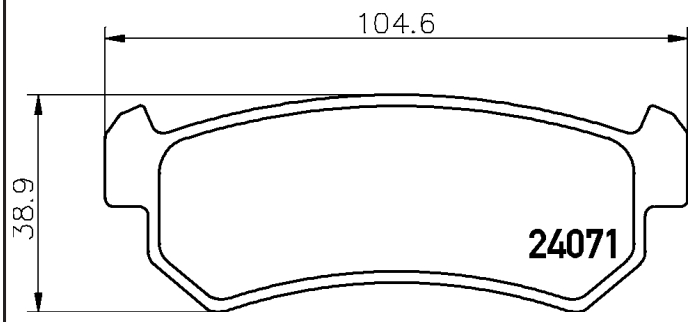

14.6

2407201

24072 177 1 4

FIAT

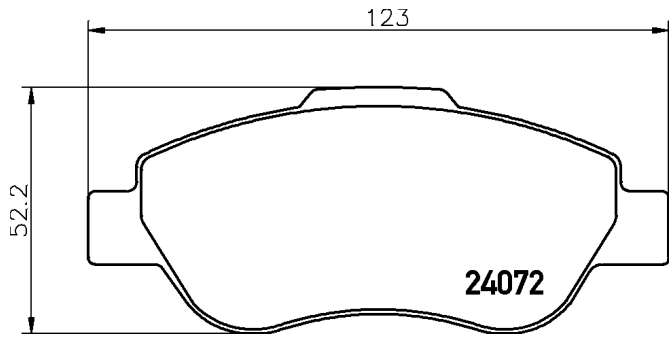

17.7

2407202

24072 177 2 5

FIAT, FORD

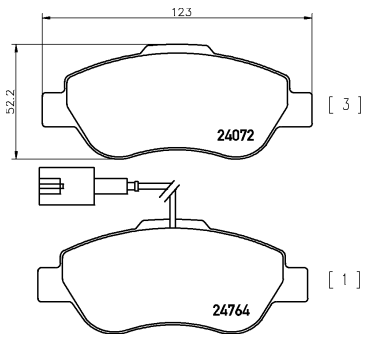

17.7

2407301

24073 164 1 4

LANCIA

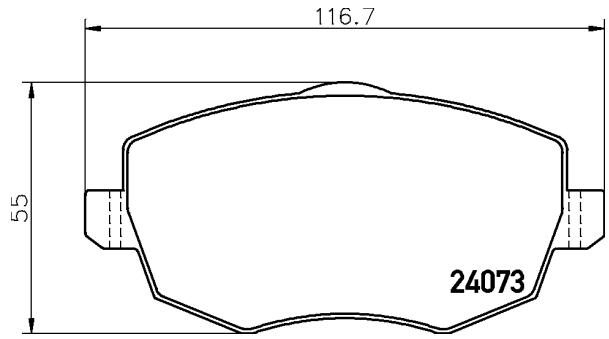

16.4

2407302

24073 164 2 4

LANCIA

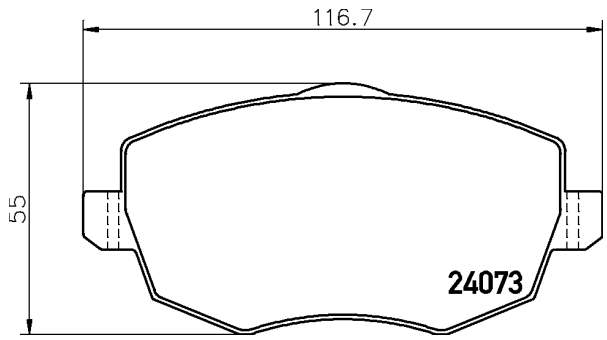

16.4

2407303

24073 164 1 5

LANCIA

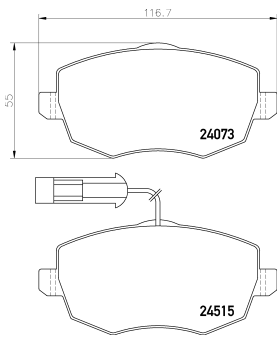

16.4

2407304

24073 164 2 5

LANCIA

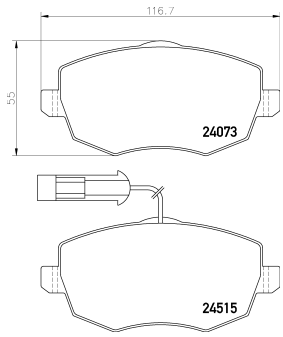

16.4

2407501

24075 170 0 4

CHRYSLER, DODGE, JEEP

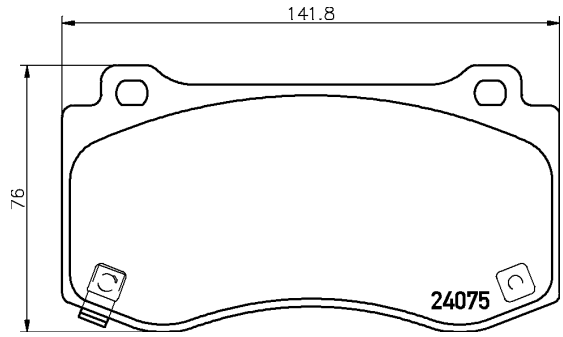

17

2407601

24076 148 0 4

CHRYSLER, DODGE, JEEP

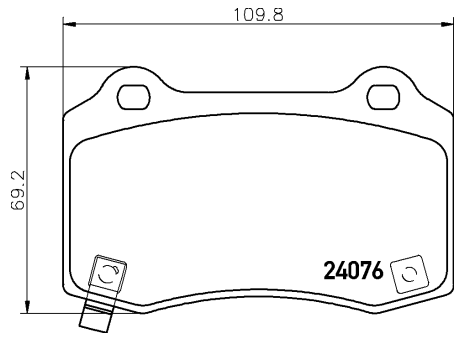

14.8

2407701

24077 190 1 4

MERCEDES-BENZ

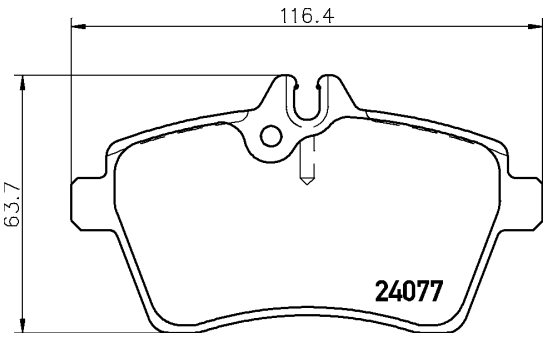

19

2407702

24077 190 2 4

MERCEDES-BENZ

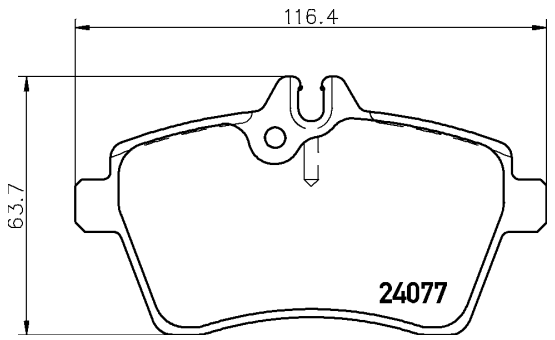

19

2407901

24079 187 0 5

JAGUAR

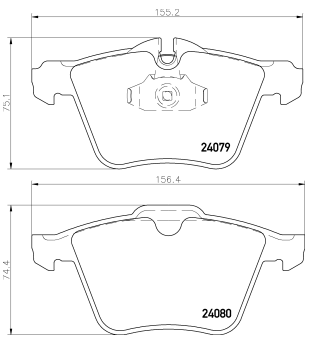

18.7

2407903

24079 202 0 5

JAGUAR

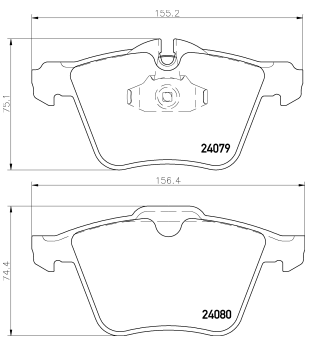

20.2

2408301

24083 192 1 4

JEEP

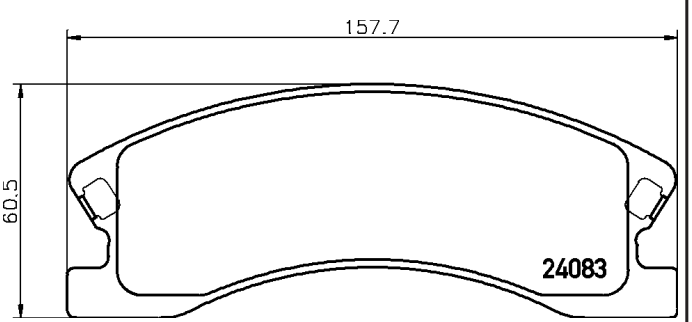

19.2

2408401

24084 190 0 5 T4136

JAGUAR

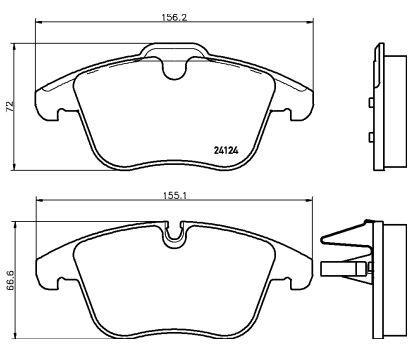

19

2408403

24084 190 0 5 T4394

JAGUAR

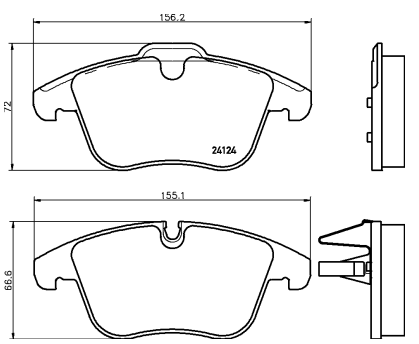

19

2408601

24086 157 1 5

HONDA

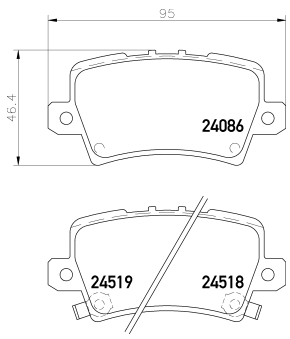

15.7

2408701

24087 175 1 5

HONDA

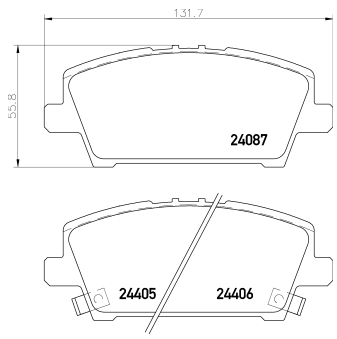

17.5

2409201

24092 173 0 5

KIA

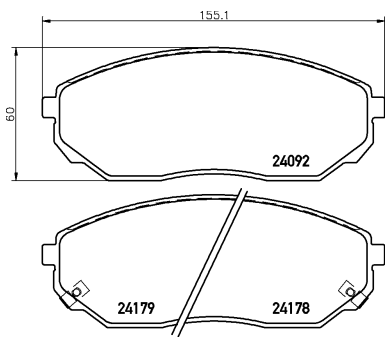

17.3

2409601

24096 203 0 5

BMW, BMW (BRILLIANCE)

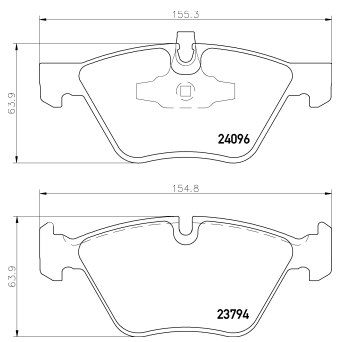

20.3

2409681

24096 203 0 5 epad

BMW, BMW (BRILLIANCE)

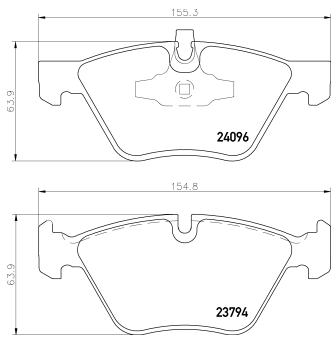

20.3

2409701

24097 171 0 4

VOLKSWAGEN

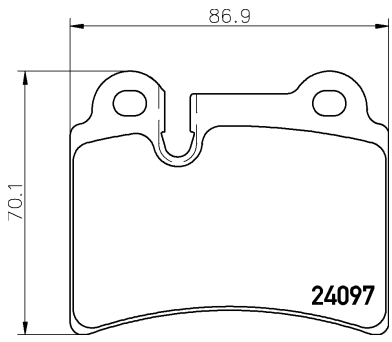

17.1

2409801

24098 171 0 4

VOLKSWAGEN

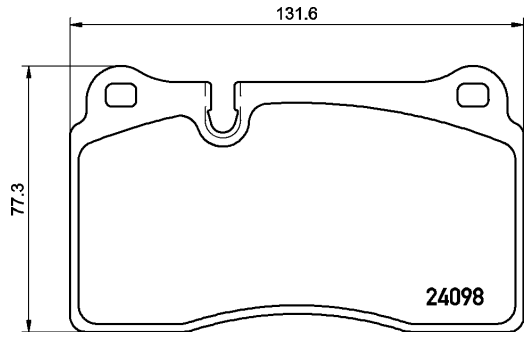

17.1

2409803

24098 160 0 4

AUDI

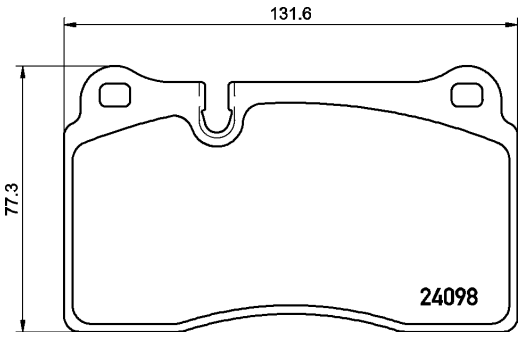

16

2409901

24099 180 0 4

FORD USA

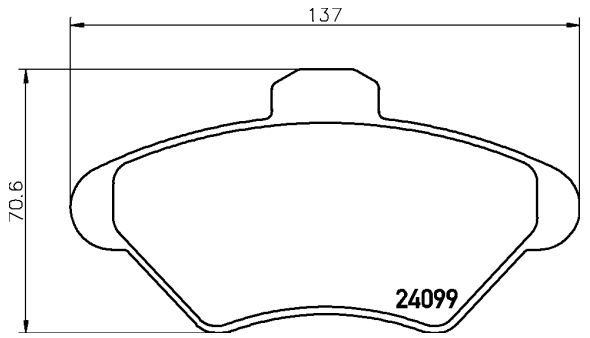

18

2410001

24100 155 0 4

FORD USA

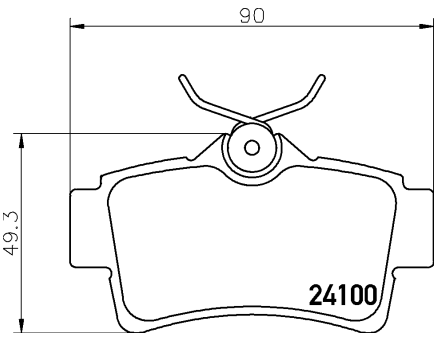

15.5

2410101

24101 190 1 4

CITROËN, CITROËN (DF-PSA), PEUGEOT, PEUGEOT (DF-PSA)

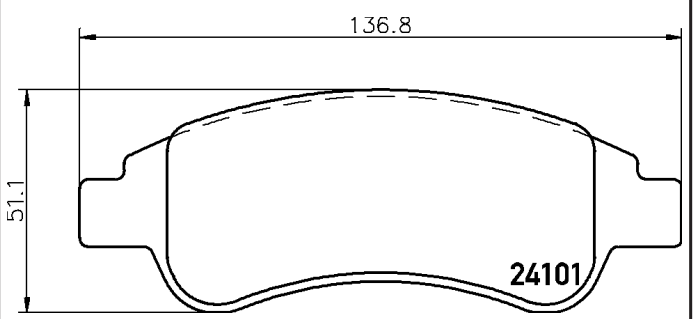

19

2410601

24106 180 0 5

NISSAN

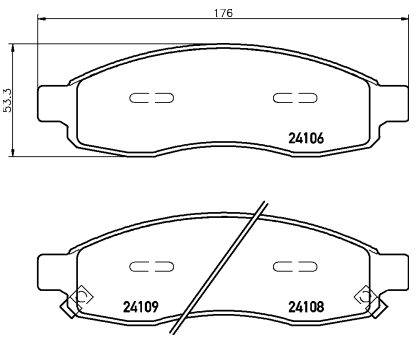

18

2411102

24111 171 0 5

INFINITI, NISSAN

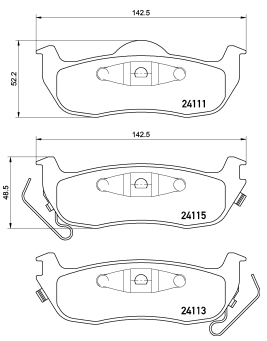

17.1

2411601

24116 163 0 5

BUGATTI

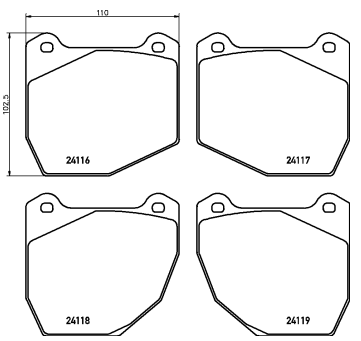

16.3

2412001

24120 163 0 4

BUGATTI

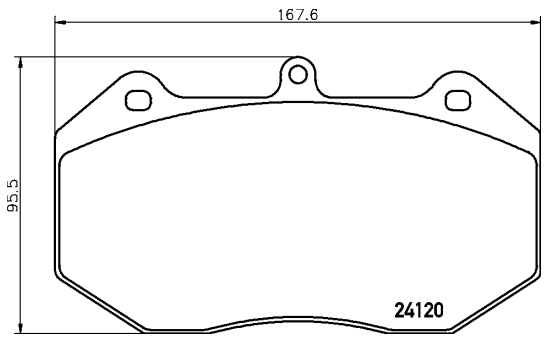

16.3

2412201

24122 192 1 5

TOYOTA

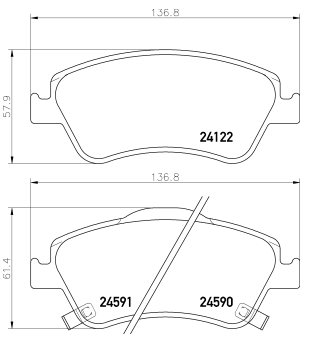

19.2

2412301

24123 203 0 5

FORD, FORD (CHANGAN), FORD AUSTRALIA, LAND ROVER, VOLVO, VOLVO (CHANGAN)

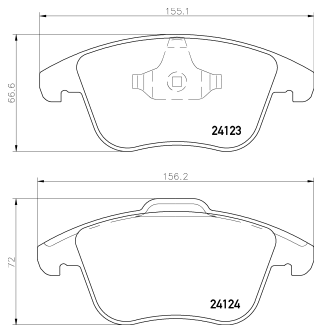

20.3

2412305

24123 203 9 5

LAND ROVER

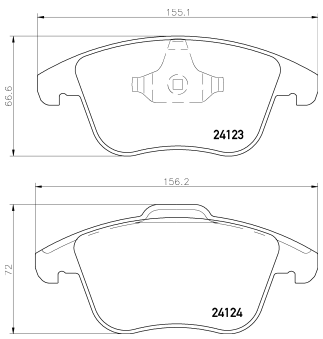

20.3

2413301

24133 177 1 5

CITROËN, PEUGEOT

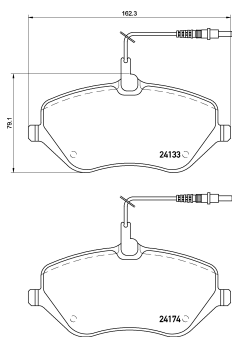

17.7

2413303

24133 183 1 5

CITROËN, PEUGEOT

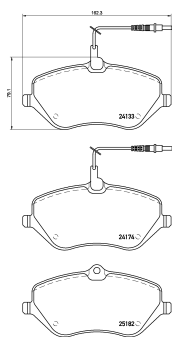

18.3

2413501

24135 178 1 4

CITROËN, PEUGEOT

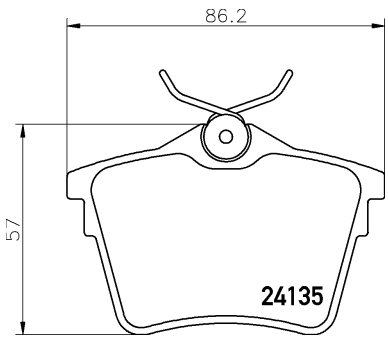

17.8

2413701

24137 167 0 5

CADILLAC, CHEVROLET, CITROËN, FORD, FORD AUSTRALIA, FORD USA, HOLDEN, HONDA, JAGUAR, MAZDA, OPEL, PONTIAC, RENAULT, SAAB, VAUXHALL, VOLVO (CHANGAN)

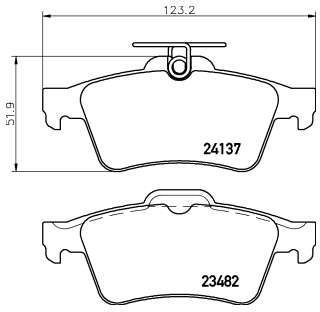

16.7

2413781

24137 167 0 5 epad

CADILLAC, CHEVROLET, CITROËN, FORD, FORD AUSTRALIA, FORD USA, HOLDEN, HONDA, JAGUAR, MAZDA, OPEL, PONTIAC, RENAULT, SAAB, VAUXHALL, VOLVO (CHANGAN)

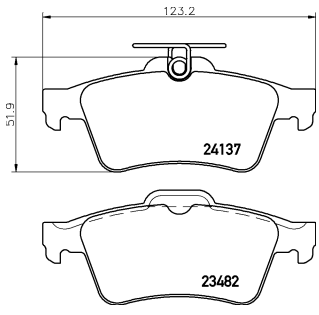

16.7

2414101

24141 198 0 5

VOLVO

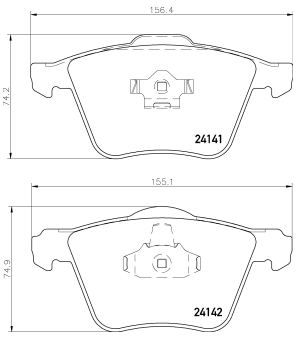

19.8

2414201

24142 198 0 5

FORD, FORD AUSTRALIA, VOLVO, VOLVO (CHANGAN)

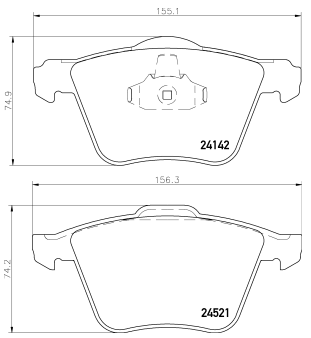

19.8

2414301

24143 150 0 5

SEAT

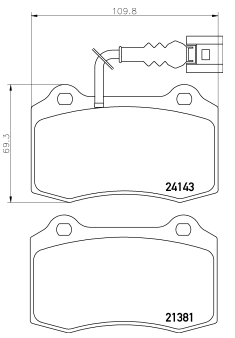

15

2415001

24150 176 1 4

CITROËN, PEUGEOT

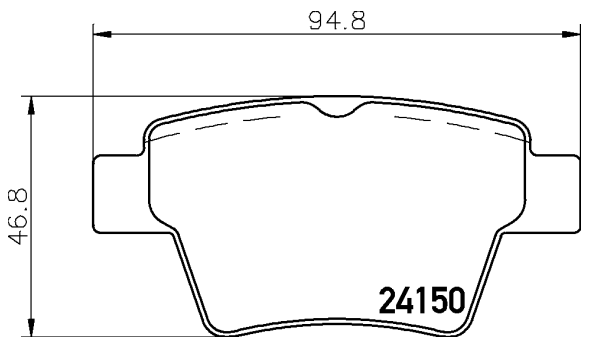

17.6

2415101

24151 203 0 5

MERCEDES-BENZ

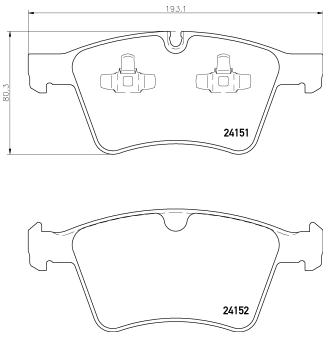

20.3

2415404

24154 17,7 0 4

PORSCHE

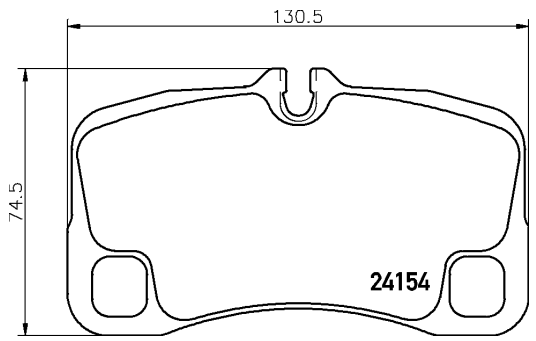

17.7

2415501

24155 206 0 5

CHEVROLET, OPEL, SAAB, VAUXHALL

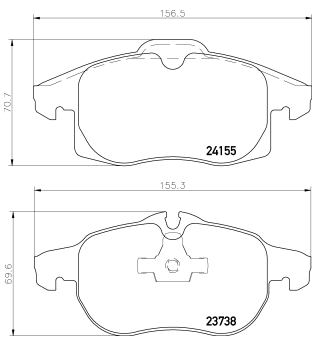

20.6

2415601

24156 171 0 4

MERCEDES-BENZ

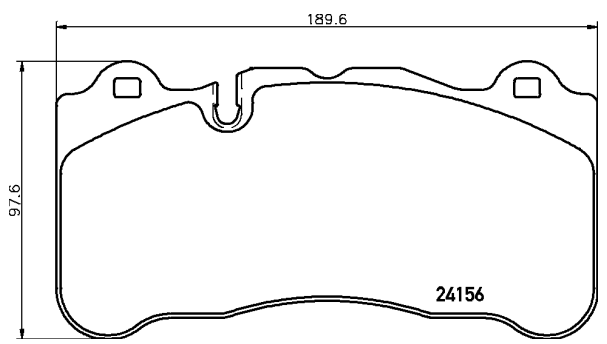

17.1

2416201

24162 153 0 4

RENAULT

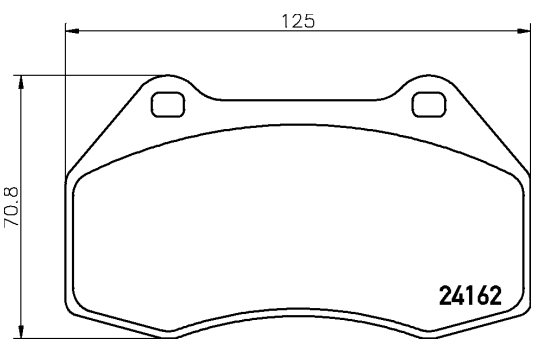

15.3

2416202

24162 153 0 5

ALFA ROMEO, FIAT

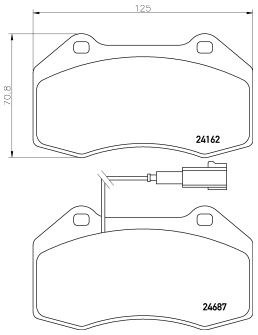

15.3

2416301

24163 178 0 4

CHRYSLER, CHRYSLER (BBDC), DODGE, LANCIA

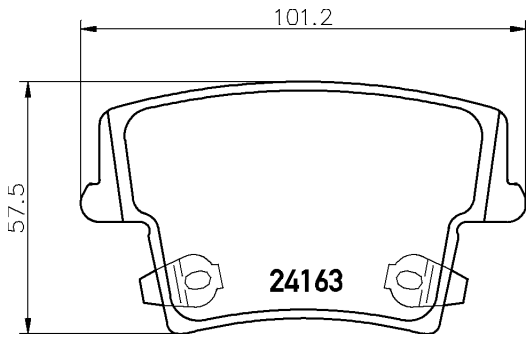

17.8

2416401

24164 178 0 4

CHRYSLER, CHRYSLER (BBDC), DODGE, LANCIA

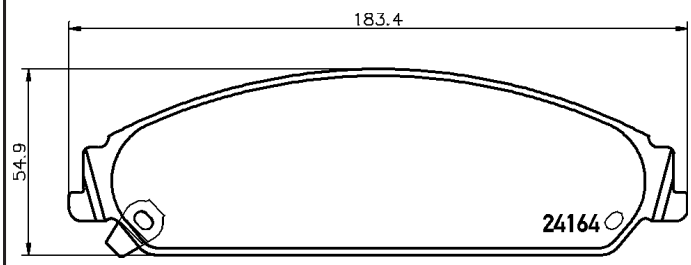

17.8

2416601

24166 188 0 4

CHRYSLER, DODGE

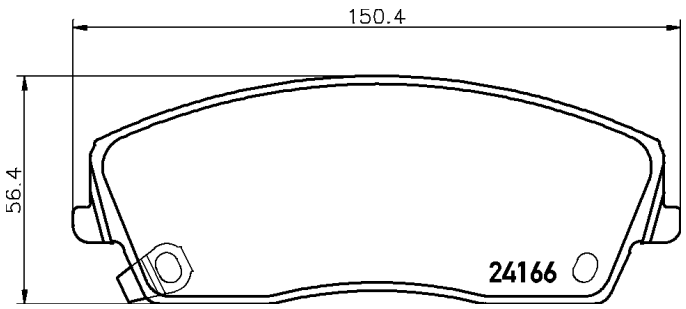

18.8

2417001

24170 197 0 5

BMW

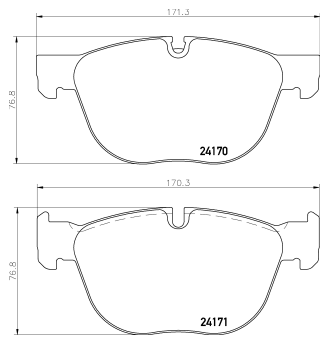

19.7

2417081

24170 197 0 5 epad

BMW

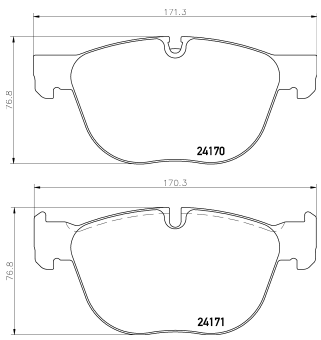

19.7

2417201

24172 197 0 5

BMW

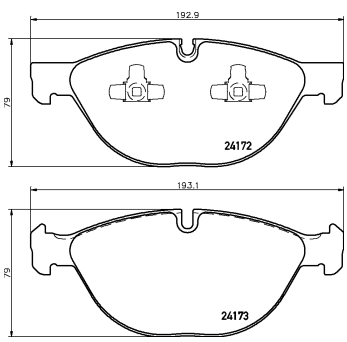

19.7

2417501

24175 187 1 5

PEUGEOT

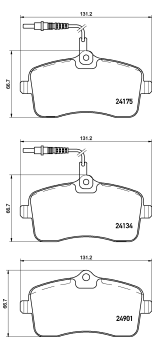

18.7

Illustrations

2417601

24176 208 0 5

MERCEDES-BENZ

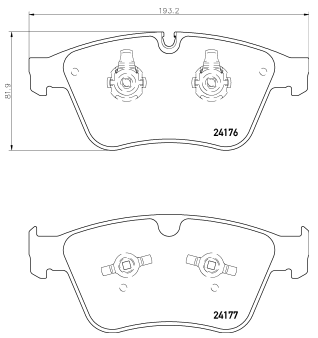

20.8

2418001

24180 169 0 5

MERCEDES-BENZ

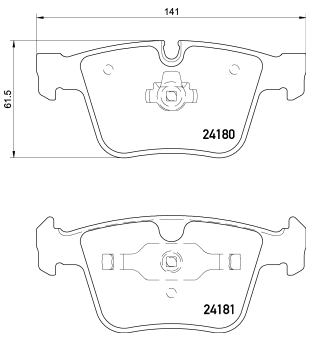

16.9

2419001

24190 165 1 4

JAGUAR

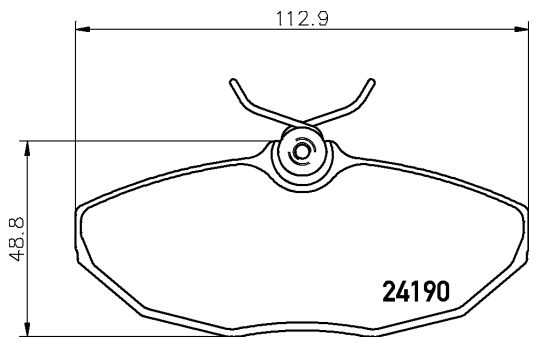

16.5

2419101

24191 181 1 4

LAND ROVER

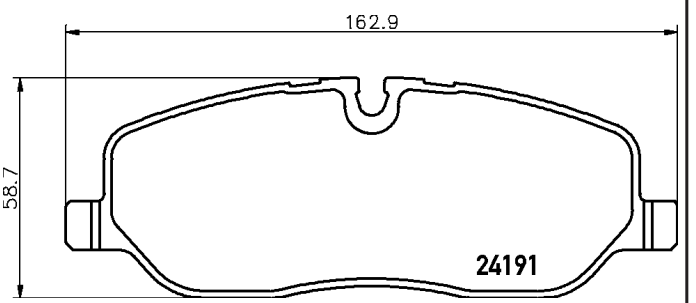

18.1

2419181

24191 181 1 4 epad

LAND ROVER

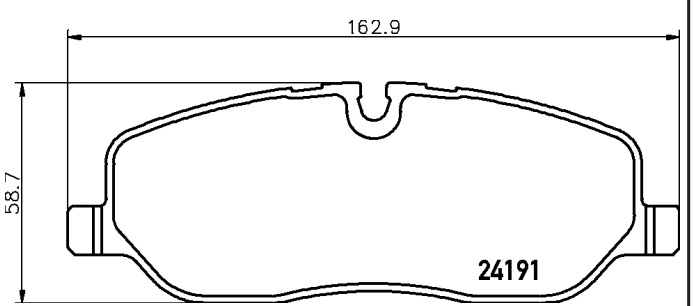

18.1

2419201

24192 173 1 4

LAND ROVER

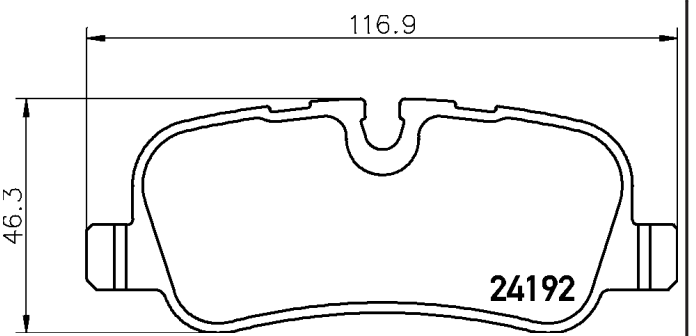

17.3

2419204

24192 173 2 4

LAND ROVER

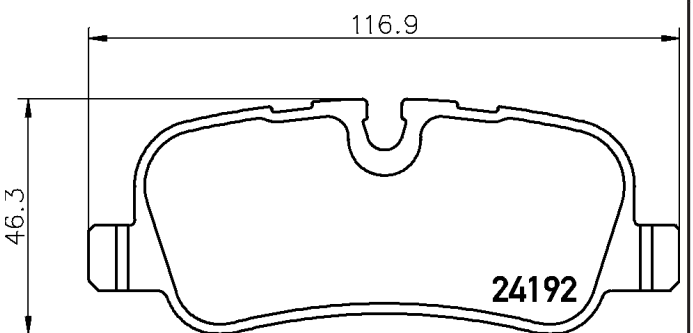

17.3

2419281

24192 173 1 4 epad

LAND ROVER

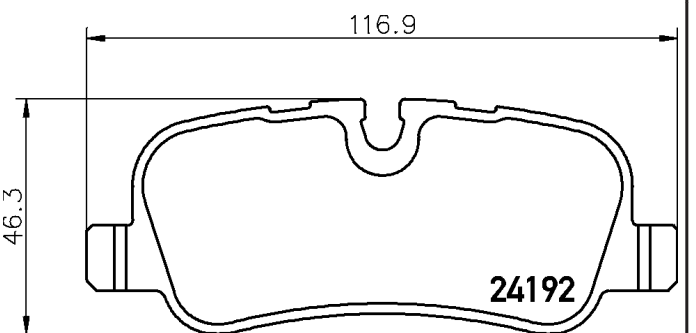

17.3

2419282

24192 173 2 4 epad

LAND ROVER

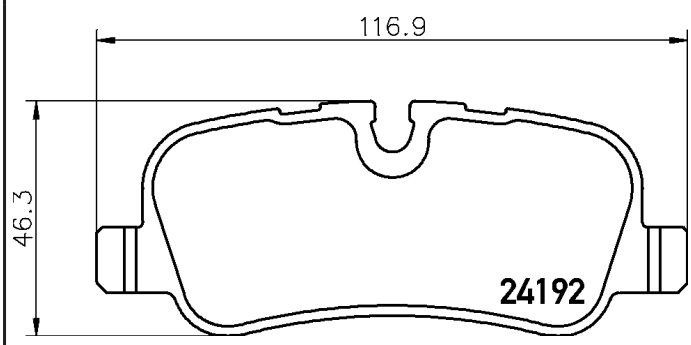

17.3

2419401

24194 153 0 5

CADILLAC, CHEVROLET, FORD, FORD AUSTRALIA

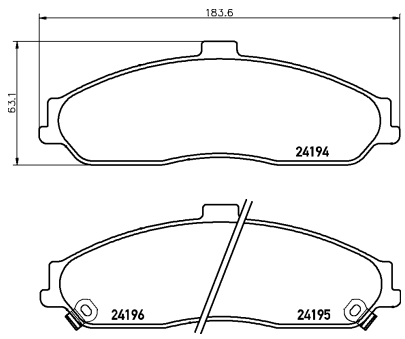

15.3

2419701

24197 168 0 5

CADILLAC, CHEVROLET

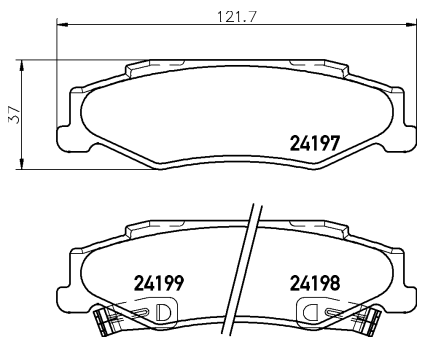

16.5

2420401

24204 192 1 5

TOYOTA

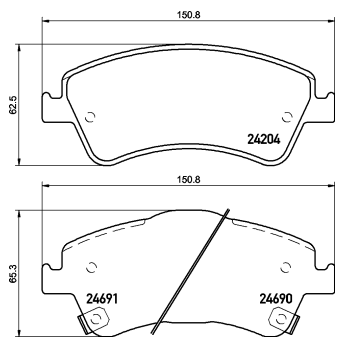

19.2

2421101

24211 172 1 5

AUDI

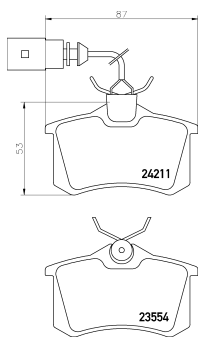

17.2

2421501

24215 160 0 5

MAZDA

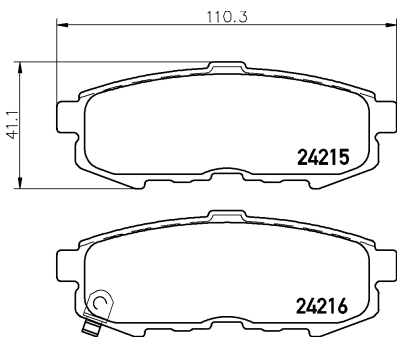

16

2421801

24218 172 0 5

KIA, KIA (DYK)

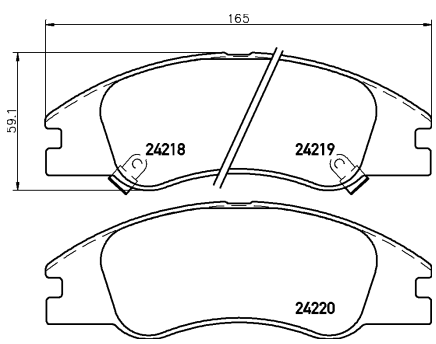

17.2

2422201

24222 180 0 5

SUBARU

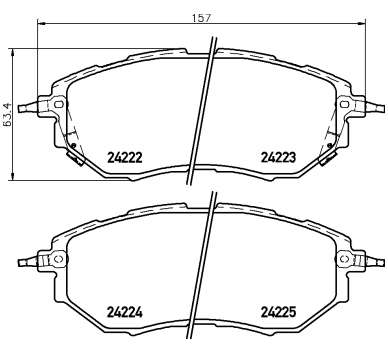

18

Illustrations

2422701

24227 165 0 5

NISSAN, SUZUKI

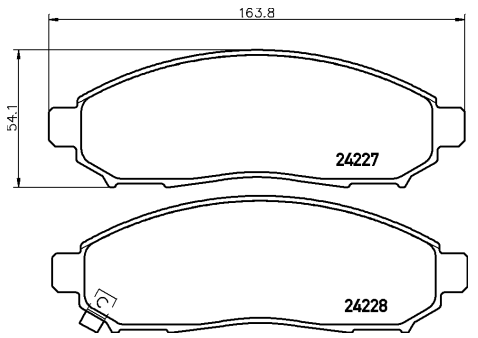

16.5

2422704

24227 154 0 5

NISSAN

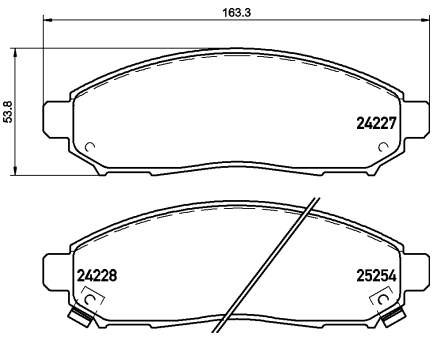

15.4

2422901

24229 153 1 5

DAIHATSU, MITSUBISHI, PERODUA

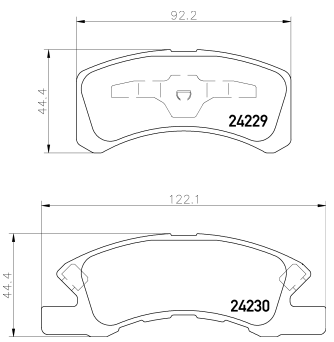

15.3

2423101

24231 149 0 5

HONDA, HONDA (DONGFENG)

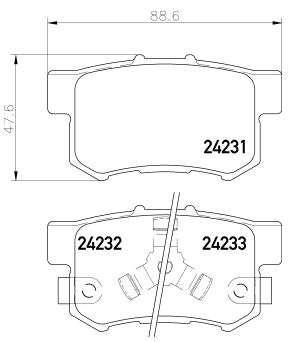

14.9

2424001

24240 160 0 5

NISSAN

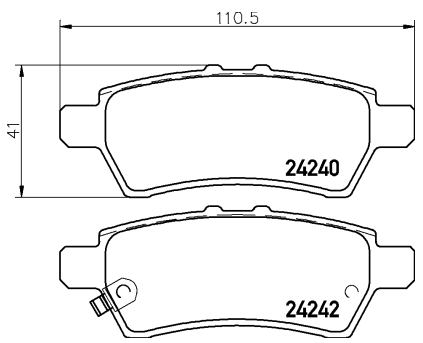

16

2424401

24244 185 0 4

LEXUS

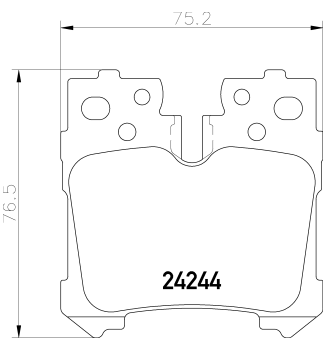

18.5

2424501

24245 185 0 4

LEXUS

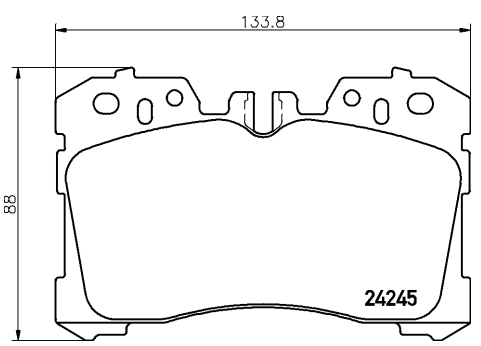

18.5

2424601

24246 170 0 5

HAWTAI, HYUNDAI (HUATAI), LANDWIND (JMC), MAZDA

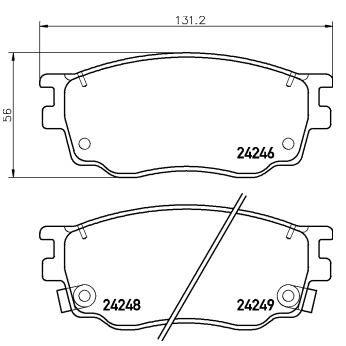

17

2425001

24250 186 0 5

JEEP

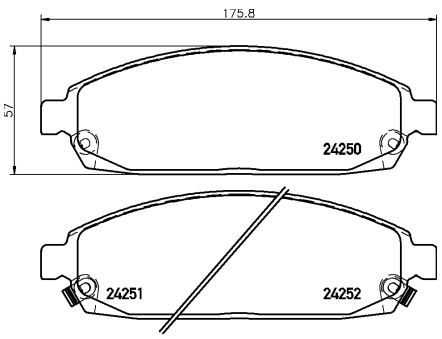

18.6

2425301

24253 179 0 5

MERCEDES-BENZ, MERCEDES-BENZ (BBDC)

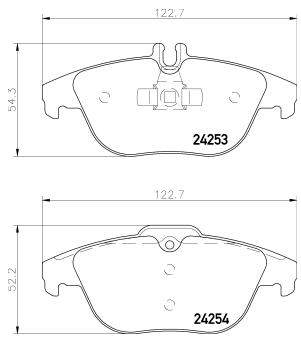

17.9

2425381

24253 179 0 5 epad

MERCEDES-BENZ, MERCEDES-BENZ (BBDC)

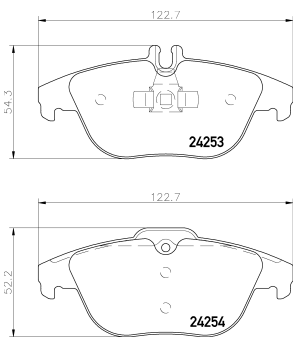

17.9

2425401

24254 179 0 5

MERCEDES-BENZ, MERCEDES-BENZ (BBDC)

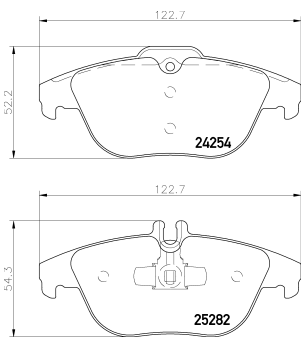

17.9

2425481

24254 179 0 5 epad

MERCEDES-BENZ, MERCEDES-BENZ (BBDC)

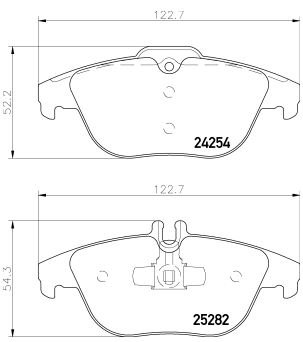

17.9

2425801

24258 179 0 5

JEEP, NISSAN

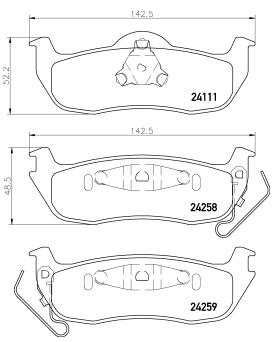

17.9

2426001

24260 163 1 4

FORD, FORD (CHANGAN), FORD USA, JAGUAR

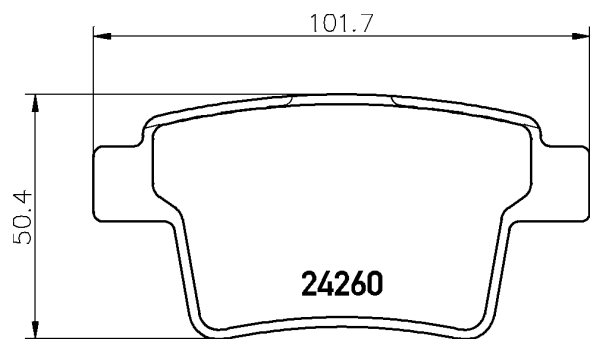

16.3

2426004

24260 163 0 5

PROTON

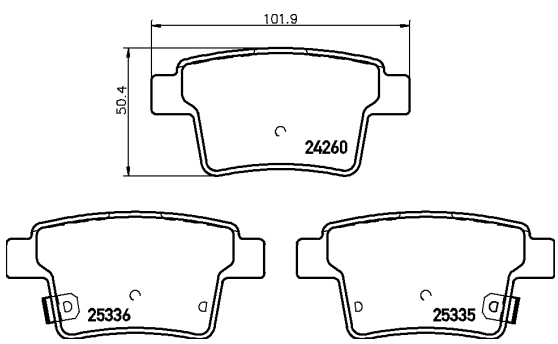

16.3

2426601

24266 157 0 5

CADILLAC

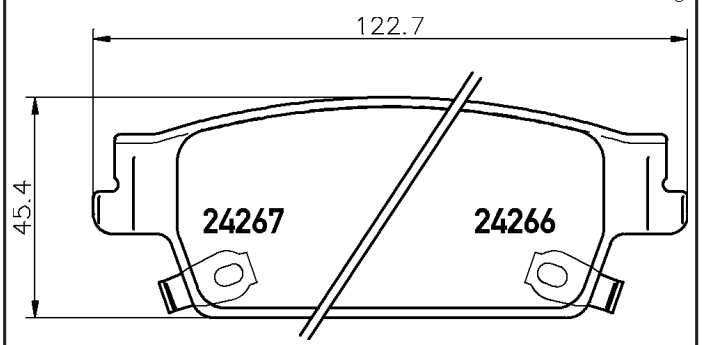

16.4

2426801

24268 139 0 4

CADILLAC

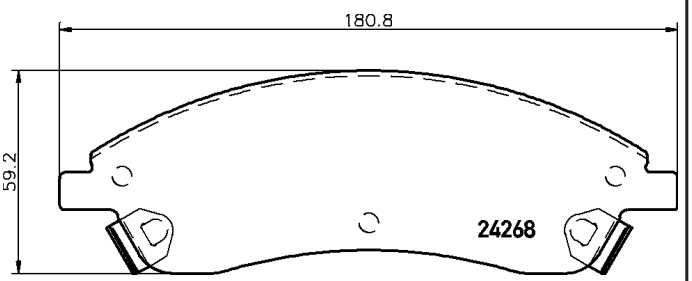

15

2427101

24271 147 1 5

SUBARU, TOYOTA

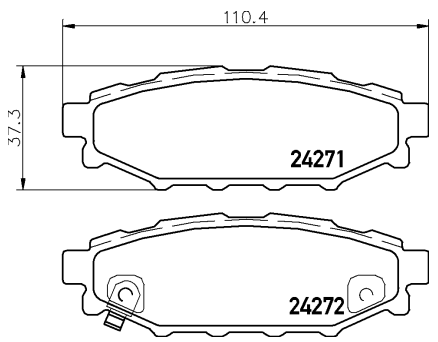

14.7

2427301

24273 160 0 5

ALFA ROMEO

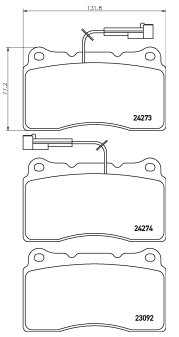

16

2427501

24275 168 0 5

DODGE, HYUNDAI, KIA, NAZA

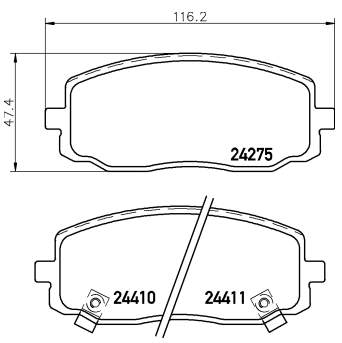

16.8

2427601

24276 148 0 5

DODGE, HYUNDAI, KIA

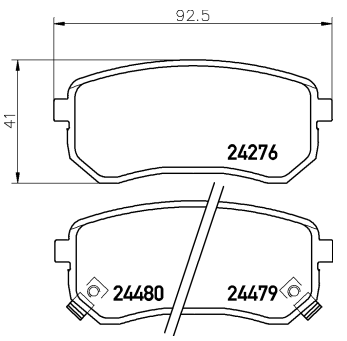

14.8

2427701

24277 165 0 5

DODGE, HYUNDAI

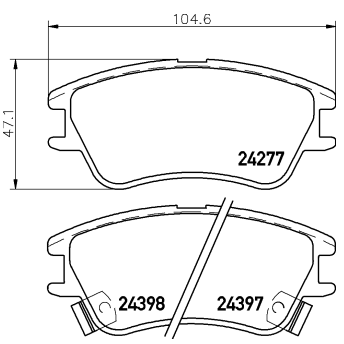

16.5

2427801

24278 192 1 5

LANCIA

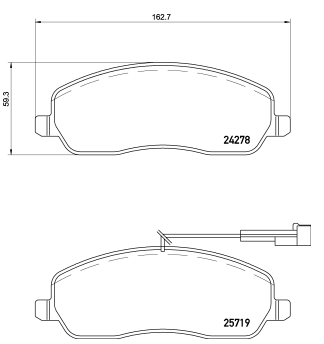

19.2

2427901

24279 145 1 4

CADILLAC

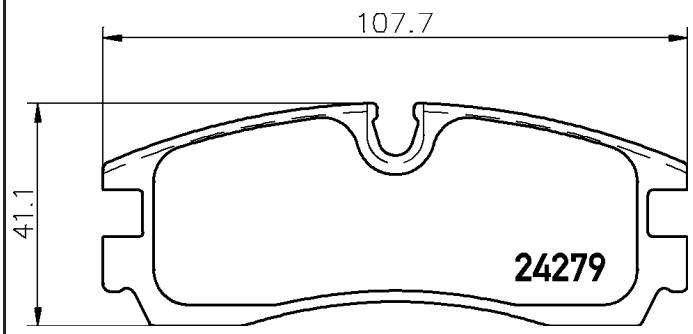

14.5

2428001

24280 160 1 5

FIAT, NISSAN, SUZUKI

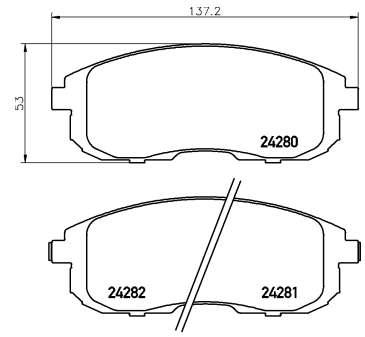

16

2428302

24283 176 1 4

FORD, FORD AUSTRALIA

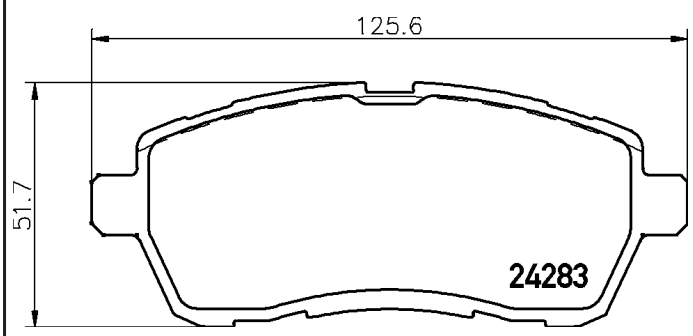

17.6

2428303

24283 165 1 5

DAIHATSU, MAZDA, MAZDA (CHANGAN), SUBARU, SUZUKI

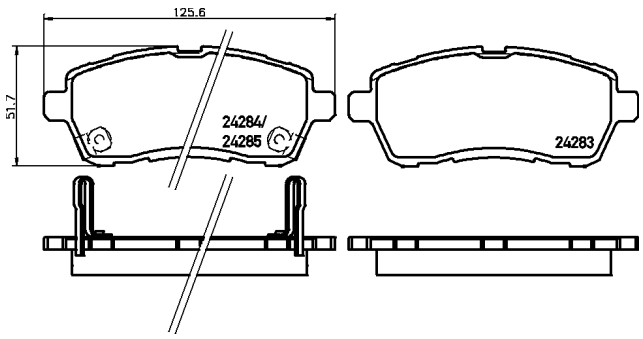

16.5

2428601

24286 147 0 5

MITSUBISHI

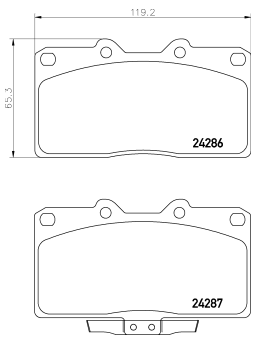

14.7

2428801

24288 178 1 5

PROTON

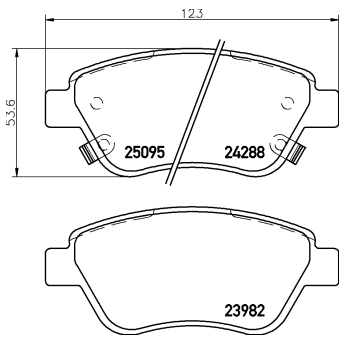

17

2428901

24289 170 1 5

MINI

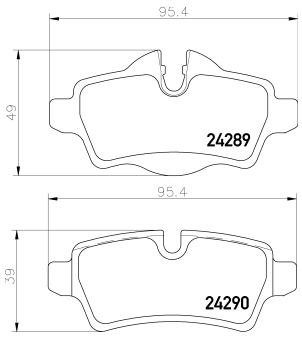

17

2429101

24291 160 1 4

MITSUBISHI

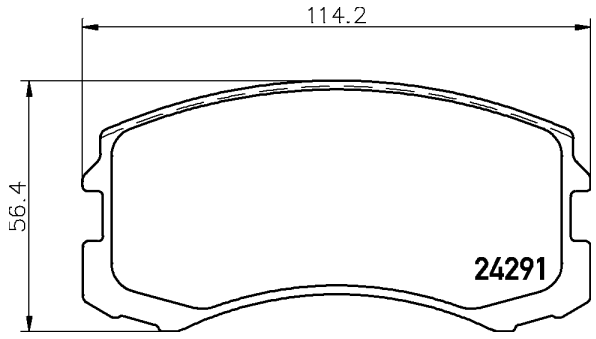

16

2429201

24292 148 0 5

SUBARU

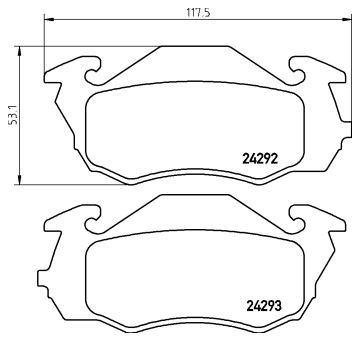

14.8

2429401

24294 193 1 5

FIAT

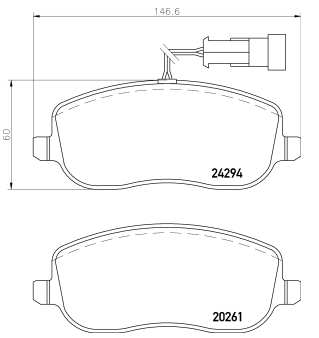

19.3

2429701

24297 150 1 4

MAZDA

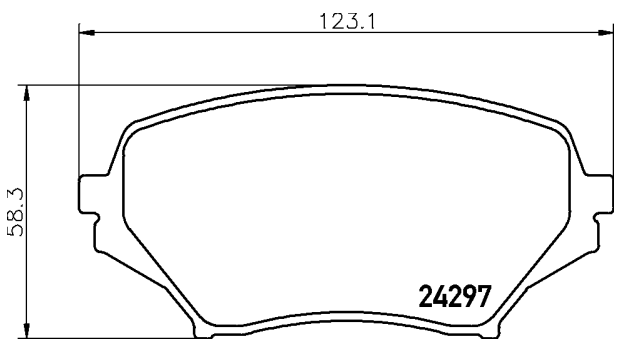

15

2429801

24298 140 0 5

MAZDA

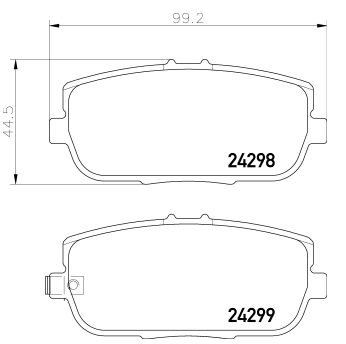

14

2430101

24301 164 0 4

SUZUKI

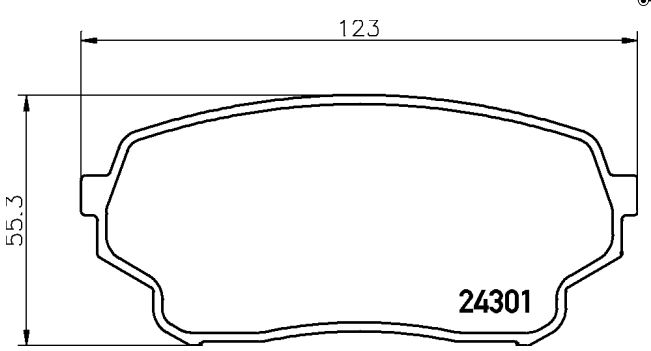

16.4

2430201

24302 163 1 4

SANTANA

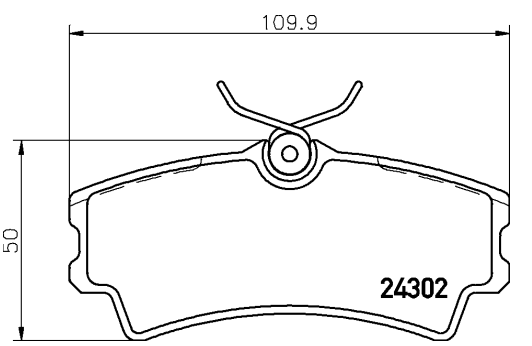

15.5

2430301

24303 141 0 4

CADILLAC, CADILLAC (SGM)

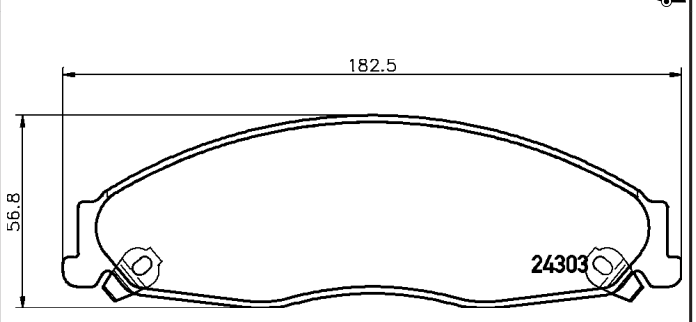

14.1

2430401

24304 154 0 5

CADILLAC, CADILLAC (SGM)

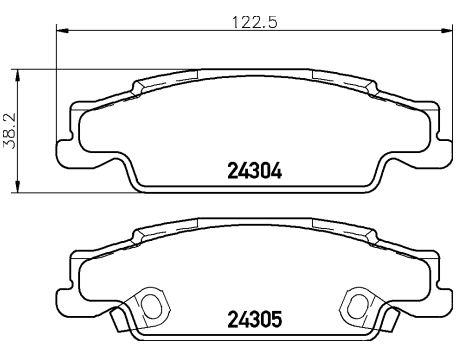

15.4

2430601

24306 206 1 5 T4278

MERCEDES-BENZ, MERCEDES-BENZ (BBDC)

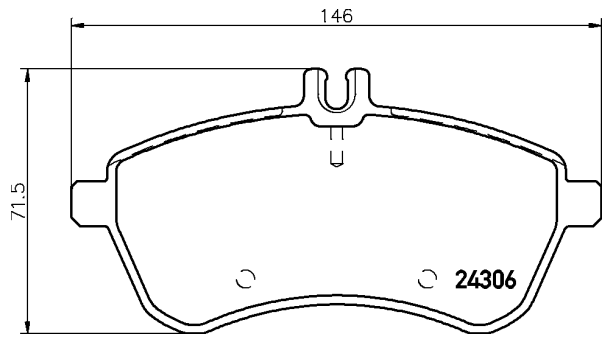

20.6

2430602

24306 206 2 5 T4278

MERCEDES-BENZ

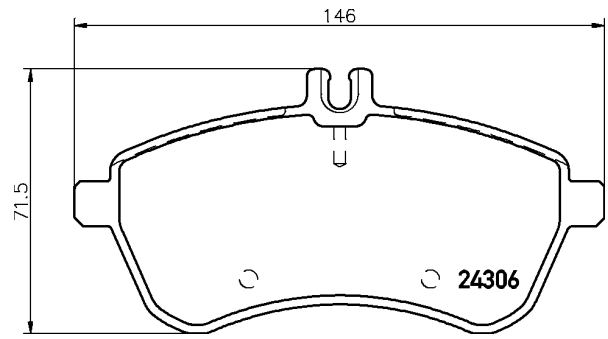

20.6

2430603

24306 206 1 5 T4645

MERCEDES-BENZ

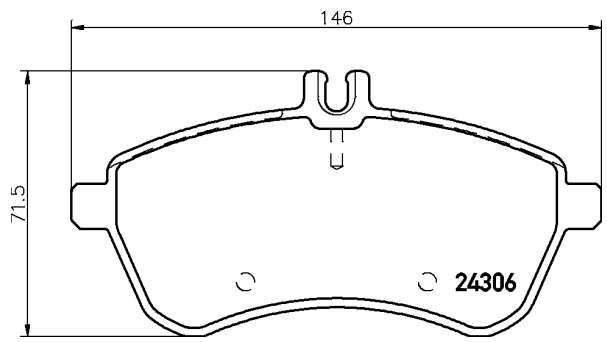

20.6

2430681

24306 206 1 5 epad

MERCEDES-BENZ, MERCEDES-BENZ (BBDC)

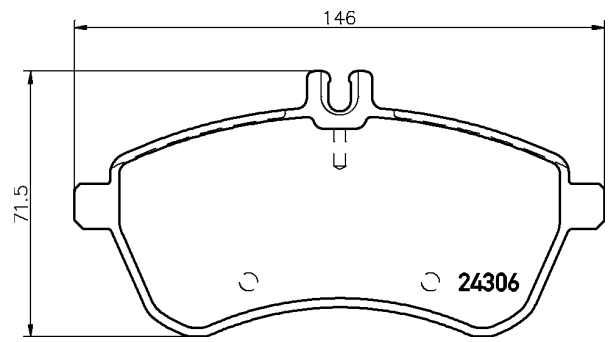

20.6

2430682

24306 206 2 5 epad

MERCEDES-BENZ

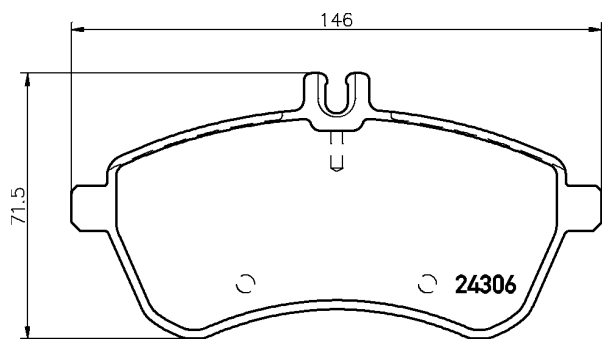

20.6

2430701

24307 163 0 5

LEXUS

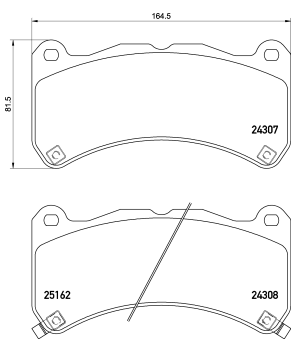

16.3

2430901

24309 176 1 4

MERCEDES-BENZ

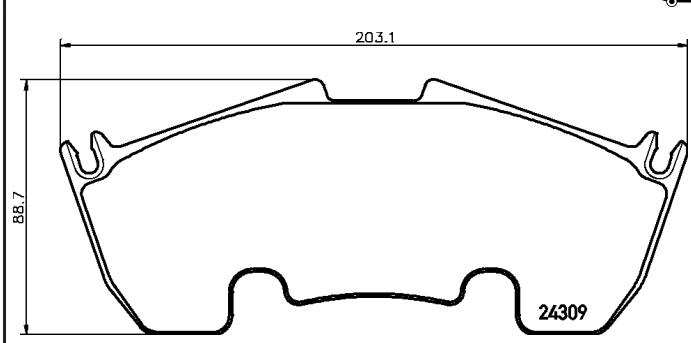

17.6

2431001

24310 194 0 5

MERCEDES-BENZ, MERCEDES-BENZ (BBDC)

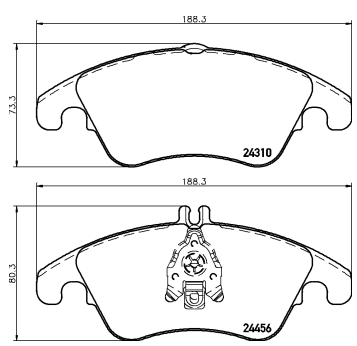

19.4

2431081

24310 194 1 5 epad

MERCEDES-BENZ, MERCEDES-BENZ (BBDC)

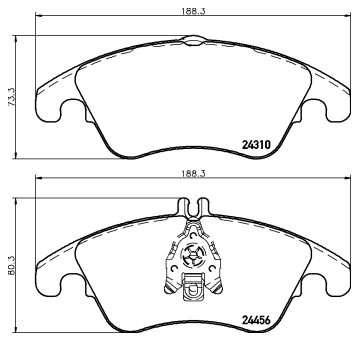

19.4

2431501

24315 169 0 4

BMW

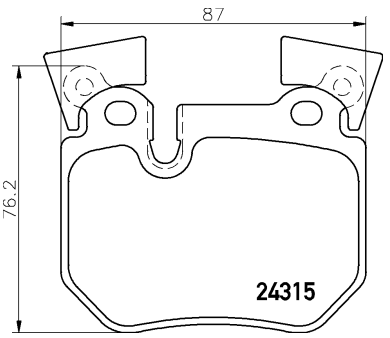

16.9

2431601

24316 170 0 4

BMW, MINI

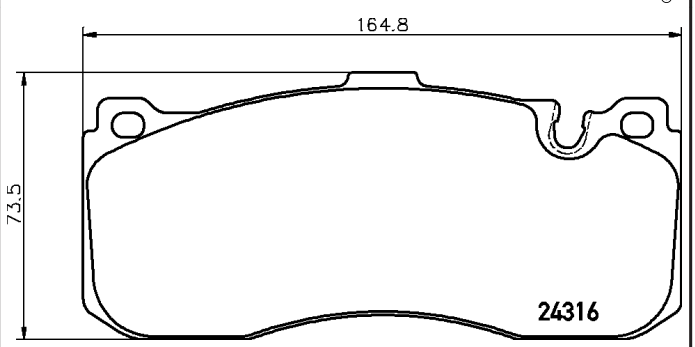

17

2431701

24317 175 0 5

DODGE, HYUNDAI, KIA

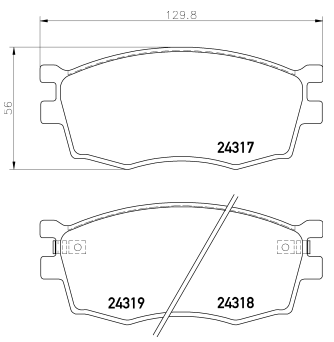

17.5

2432001

24320 159 0 5

DODGE, HYUNDAI, HYUNDAI (BEIJING), KIA, KIA (DYK)

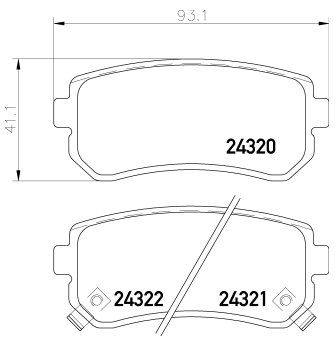

15.9

2432301

24323 155 0 5

LEXUS, TOYOTA

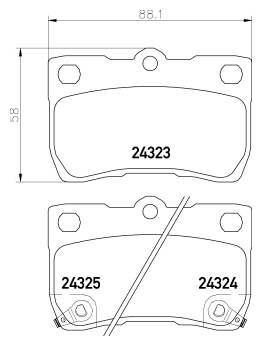

15.5

2432801

24328 208 0 5

BMW, JAGUAR

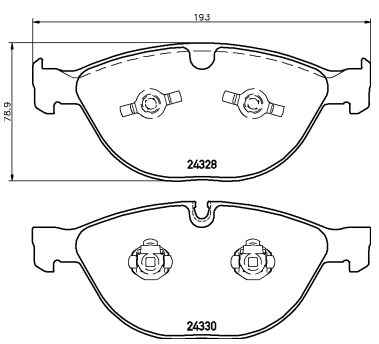

20.8

2433101

24331 140 1 4

SUBARU

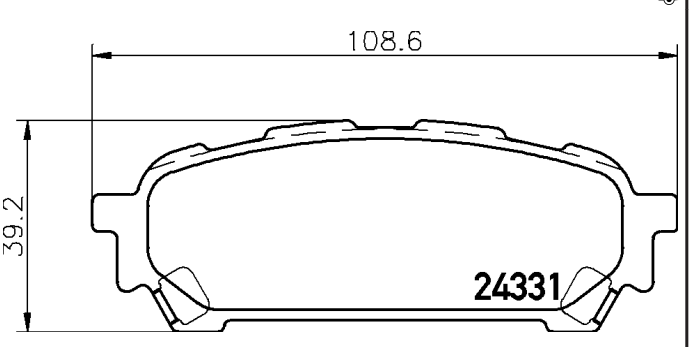

14

2433201

24332 179 1 5

CITROËN, PEUGEOT

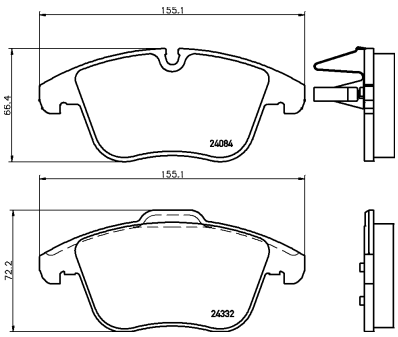

18.8

2433301

24333 199 0 5

AUDI, AUDI (FAW), SEAT, VOLKSWAGEN, VOLKSWAGEN (SVW)

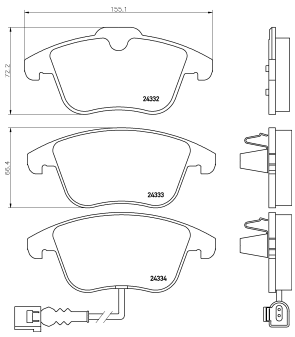

20.6

2433401

24334 200 0 5

VOLKSWAGEN

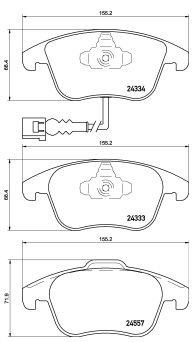

20

2433601

24336 175 0 4

LEXUS, SUBARU, TOYOTA, TOYOTA (FAW)

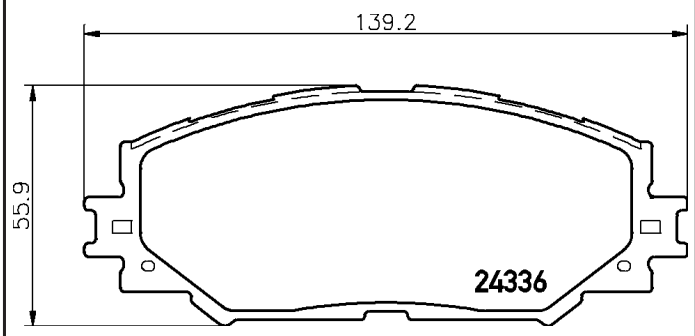

17.5

2433701

24337 176 0 4

TOYOTA, TOYOTA (FAW)

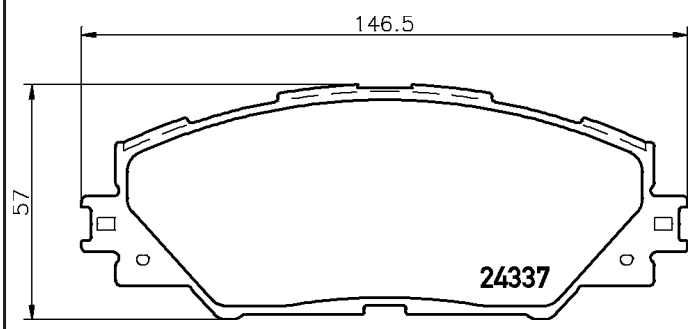

17.6

2433801

24338 154 0 4

LEXUS, TOYOTA, TOYOTA (FAW), TOYOTA (GAC)

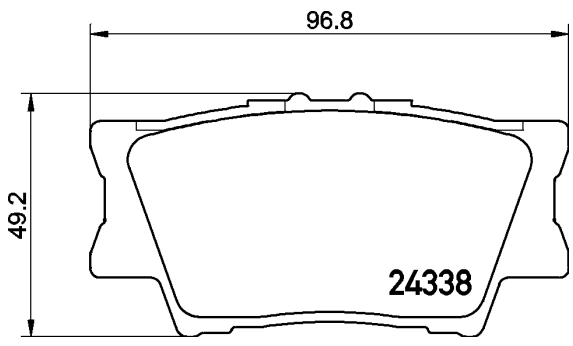

15.4

2433901

24339 205 0 5

ALFA ROMEO

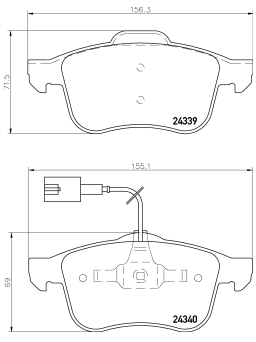

20.5

2434001

24340 201 0 5

ALFA ROMEO, DODGE

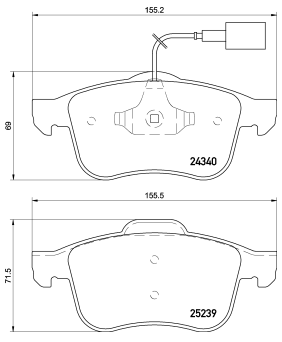

20.1

2434101

24341 153 0 5

HONDA

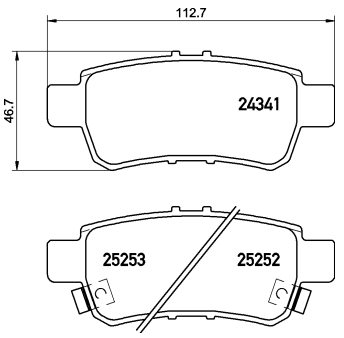

15.3

2434201

24342 178 1 5

ACURA, HONDA

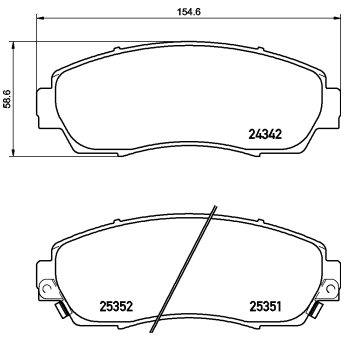

17.8

2434601

24346 171 1 4

SUZUKI

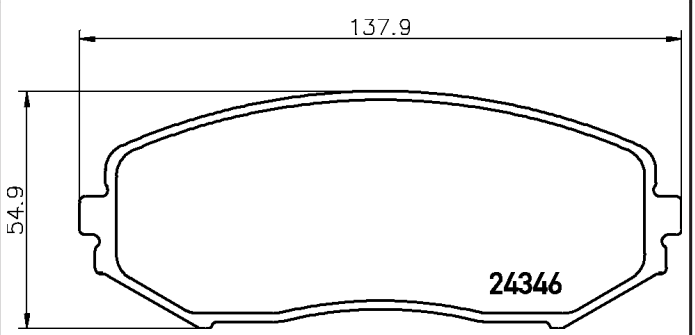

17

2434701

24347 186 0 4

DAIHATSU, TOYOTA, TOYOTA (GAC)

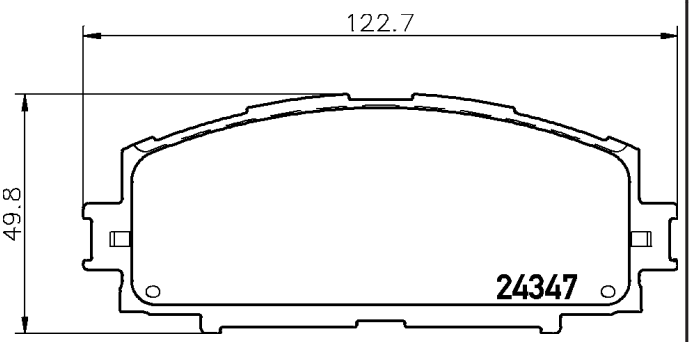

18.6

2434801

24348 168 1 4

FIAT

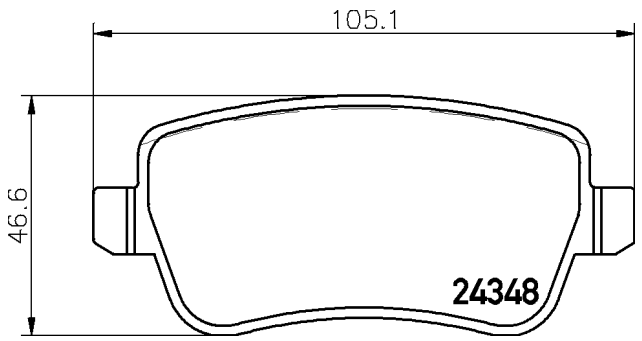

16.8

2434802

24348 168 2 4

FIAT

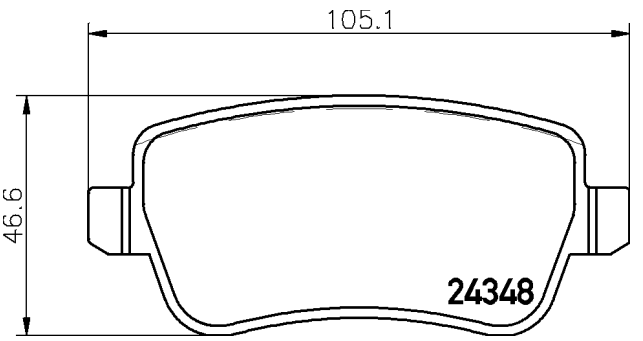

16.8

2434901

24349 175 1 4

FIAT

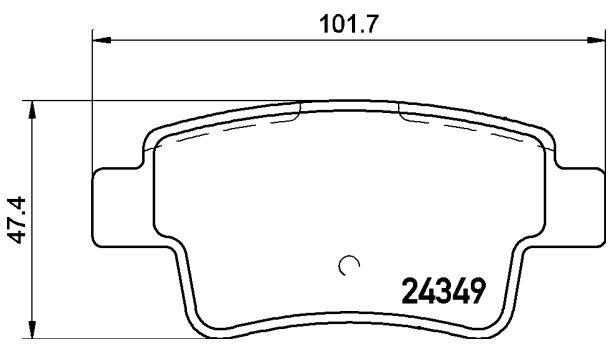

17.5

2434903

24349 175 2 4

OPEL, VAUXHALL

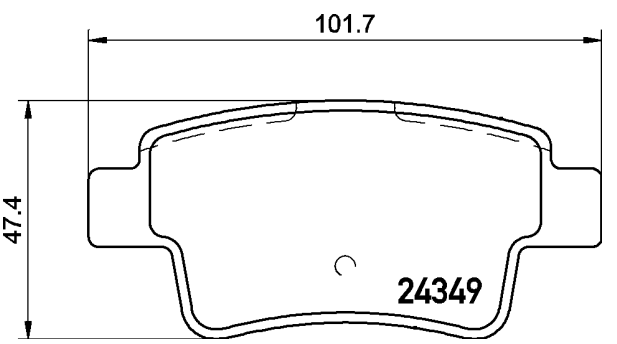

17.5

2435001

24350 176 0 4

LEXUS, TOYOTA, TOYOTA (GAC)

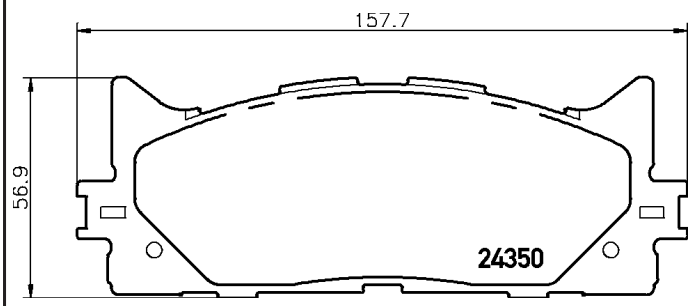

17.6

2435101

24351 176 0 5

HAWTAI, HYUNDAI, HYUNDAI (HUATAI), KIA, SSANGYONG

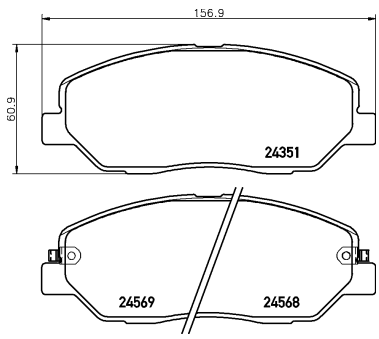

17.6

2435301

24353 169 0 5

FORD, FORD ASIA / OZEANIA, FORD AUSTRALIA, MAZDA

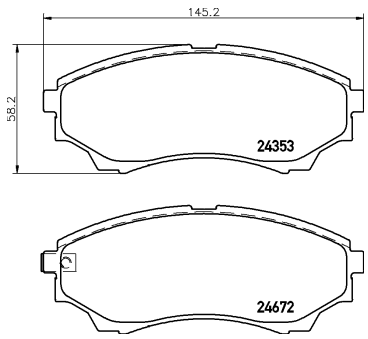

16.9

2435501

24355 140 0 5

JEEP

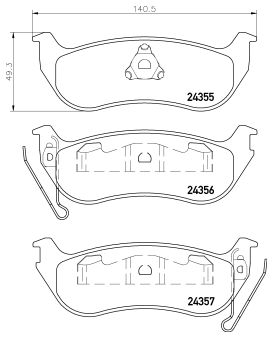

14

2435801

24358 184 1 5

LDV, MAXUS (SAIC MOTOR)

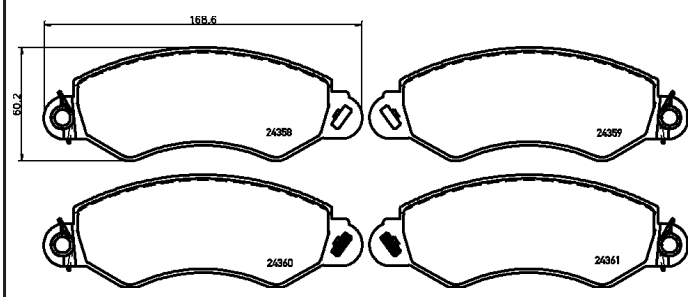

18.4

2436701

24367 190 0 5

VOLKSWAGEN

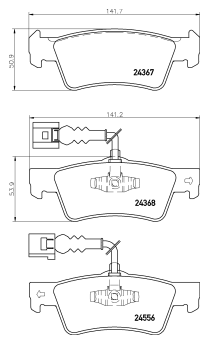

19

2436801

24368 190 0 5

VOLKSWAGEN

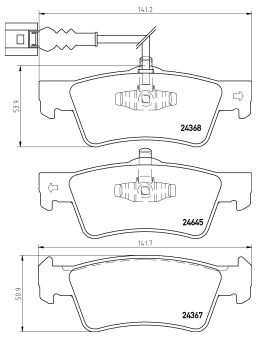

19

2436901

24369 170 0 5

HYUNDAI

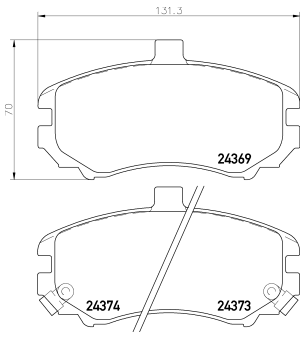

17

Illustrations

2437001

24370 161 0 5

CHEVROLET, GMC, HOLDEN, ISUZU

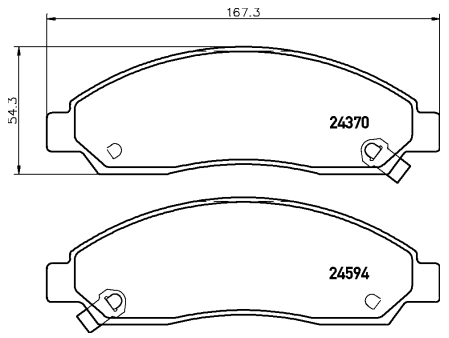

16.1

2437201

24372 174 1 4

SUBARU

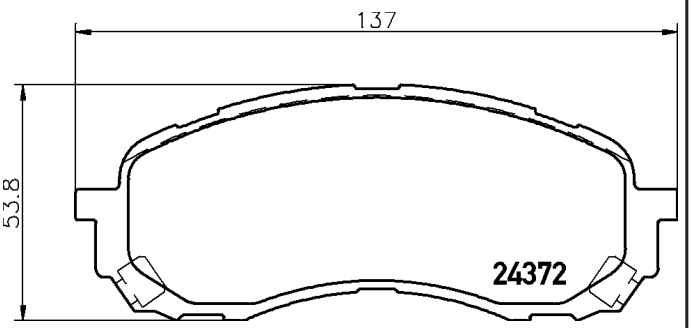

17.9

2437501

24375 180 0 5

HYUNDAI

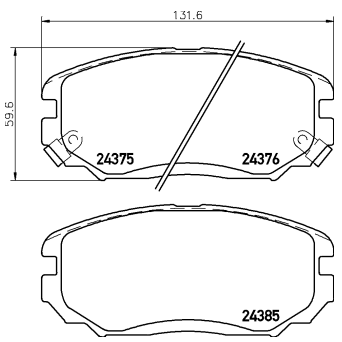

18

2437701

24377 146 0 5

FORD USA

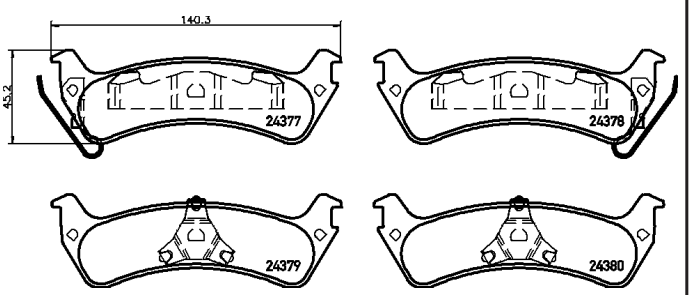

14.6

2438101

24381 146 0 5

FORD AUSTRALIA, FORD USA, MERCURY

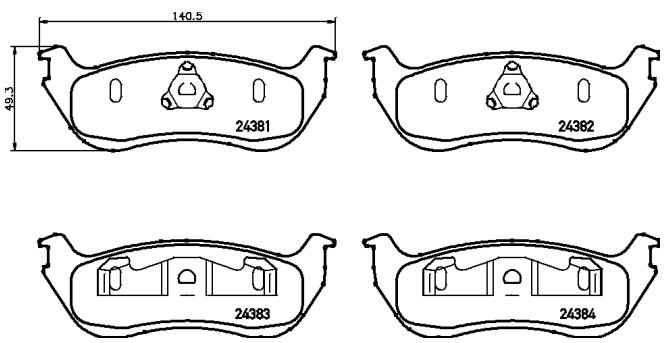

14.6

2438601

24386 179 0 5

TOYOTA, TOYOTA (FAW)

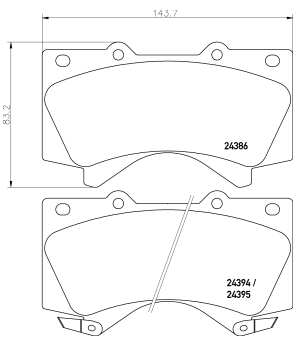

17.9

2439101

24391 160 1 5

FIAT, SUZUKI

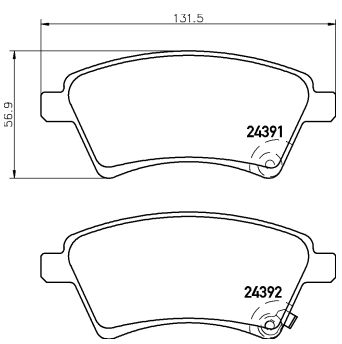

16

2439901

24399 202 0 5

VOLVO

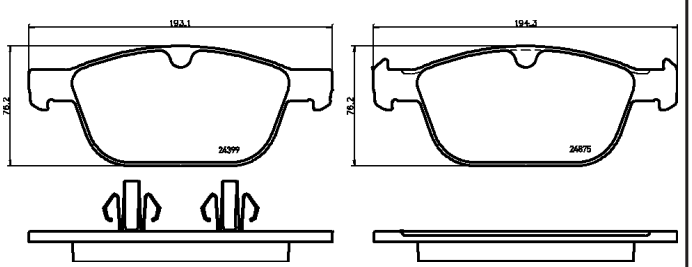

20.2

2440101

24401 175 0 5

LEXUS

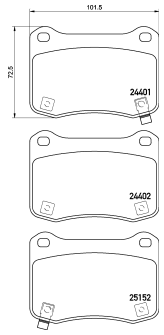

17.5

2440301

24403 173 0 5

NISSAN, RENAULT

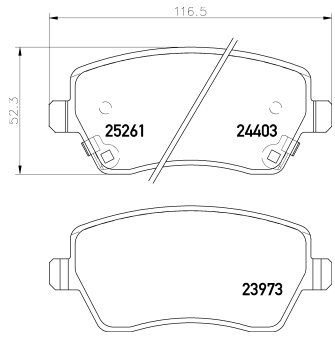

17.3

2440901

24409 180 1 5

FORD

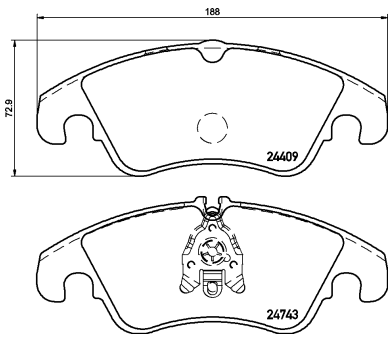

18

2441201

24412 191 1 5

BUICK, CHEVROLET, HOLDEN, OPEL, SAAB, VAUXHALL

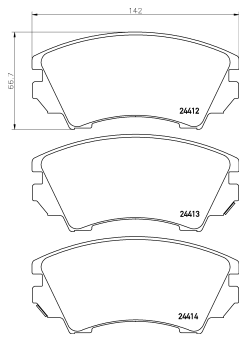

19.1

2441501

24415 191 1 5

BUICK, CHEVROLET, HOLDEN, OPEL, SAAB, VAUXHALL

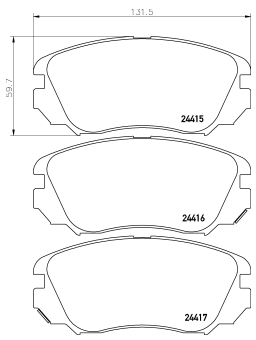

19.1

2441801

24418 172 1 5

OPEL, SAAB, VAUXHALL

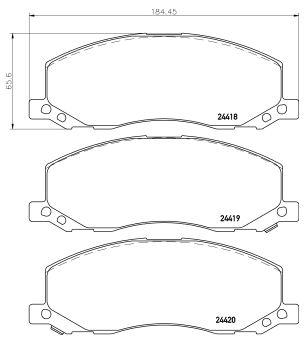

17.2

2442101

24421 173 1 5

BUICK, CHEVROLET, HOLDEN, OPEL, SAAB, VAUXHALL

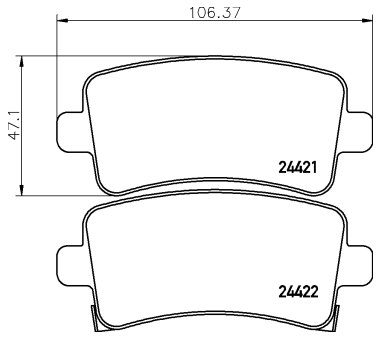

17.3

2442102

24421 173 2 5

CHEVROLET, HOLDEN, OPEL, SAAB, VAUXHALL

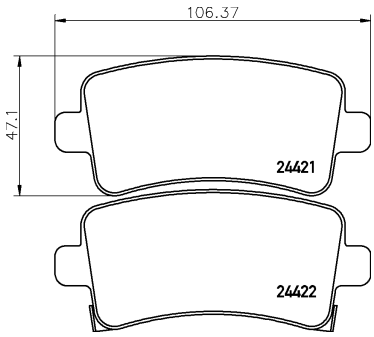

17.3

2442301

24423 147 0 4

MITSUBISHI

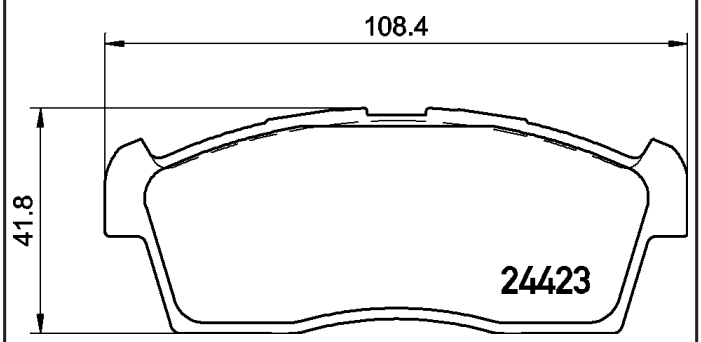

14.7

2442302

24423 147 0 5

CITROËN, MITSUBISHI, PEUGEOT

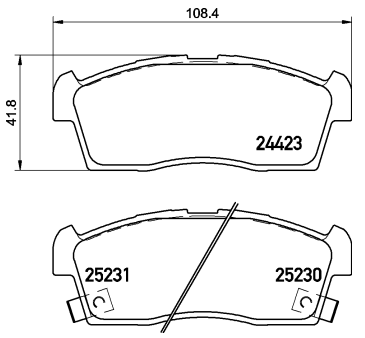

14.7

2443402

24434 148 1 5

HONDA

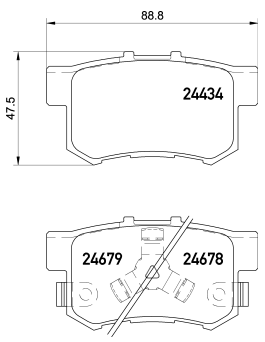

15.6

2443501

24435 148 1 5

BYD, HONDA, HONDA (DONGFENG)

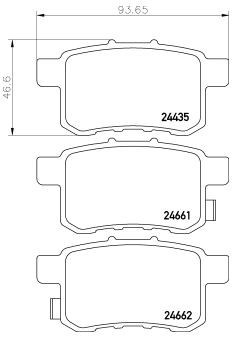

14.8

2443601

24436 199 0 5

BMW

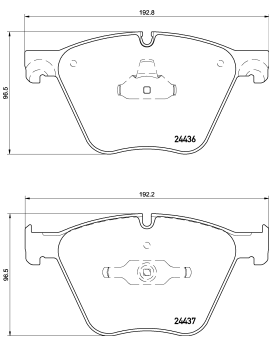

19.9

2443901

24439 150 0 5

FORD, FORD AUSTRALIA, FORD USA, MAZDA, MERCURY

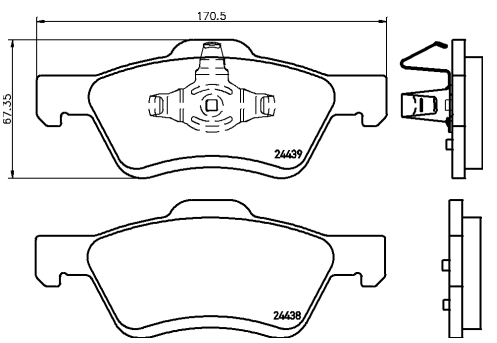

15

2444501

24445 169 0 5

CHEVROLET, ISUZU, SAAB

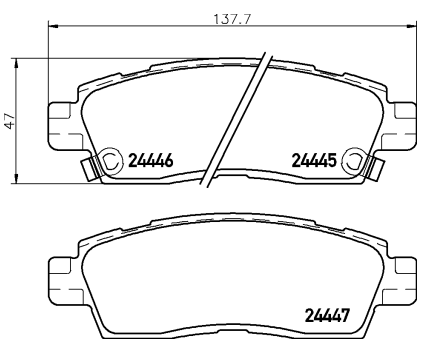

16.9

2444801

24448 168 1 4

CHEVROLET, ISUZU, SAAB

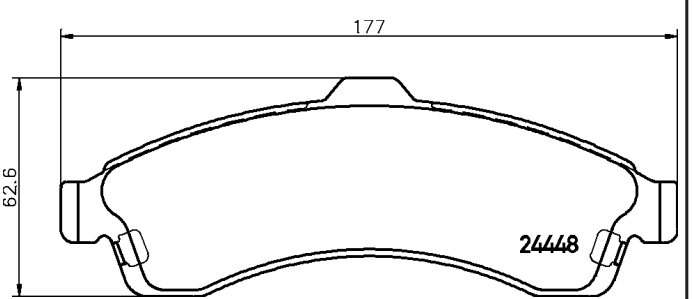

16.8

2445101

24451 156 0 4

LEXUS, TOYOTA, TOYOTA (FAW), TOYOTA (GAC)

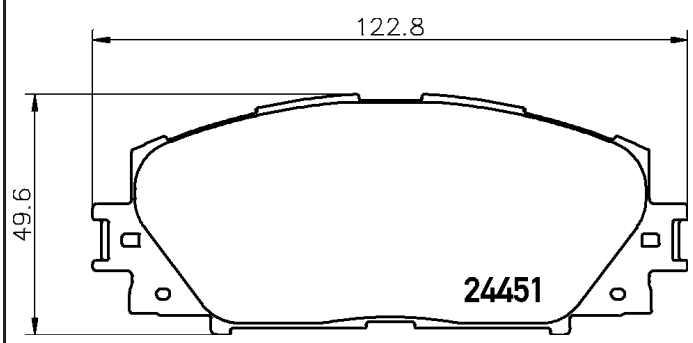

15.6

2445103

24451 172 1 4

PERODUA, TOYOTA

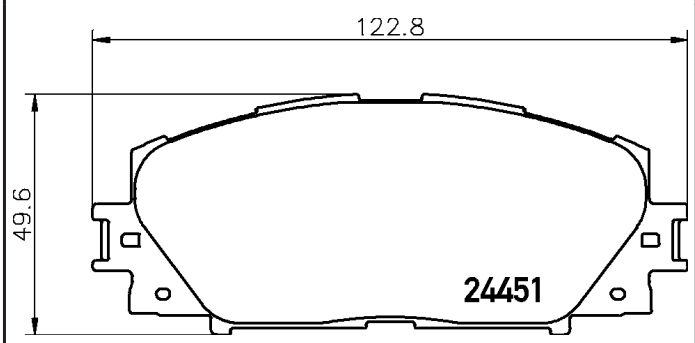

17.2

2445201

24452 175 1 4

LEXUS, TOYOTA

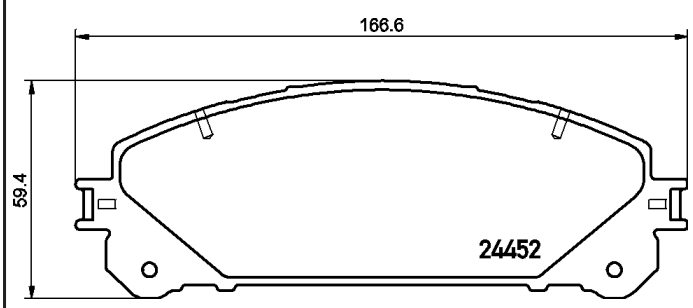

17.5

2445401

24454 175 0 4 T4997

PORSCHE

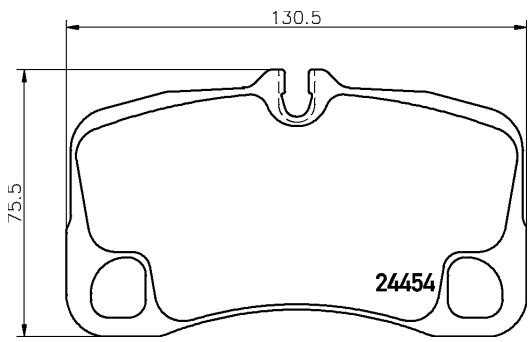

17.5

2445403

24454 170 0 4 T4997

PORSCHE

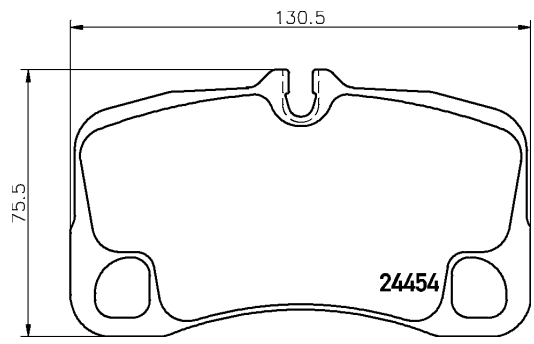

17

2445501

24455 169 0 4

AUDI, MERCEDES-BENZ

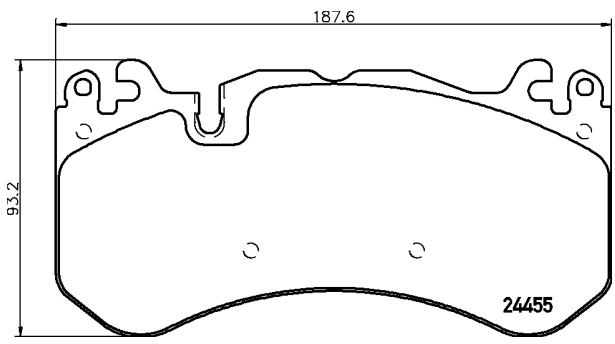

16.9

2445801

24458 171 0 5

BMW

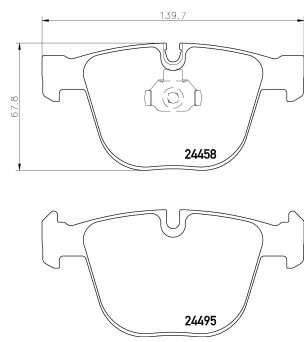

17.1

2445901

24459 185 0 5 T4997

PORSCHE

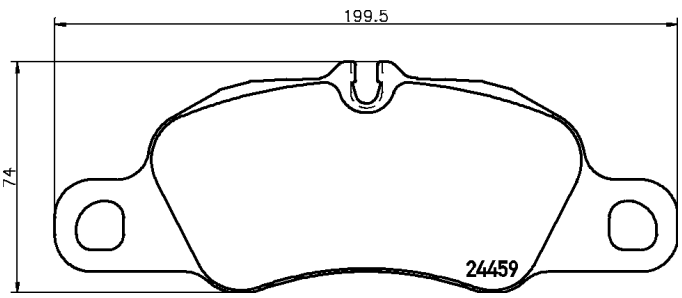

18.5

2445902

24459 185 0 5 T4045

PORSCHE

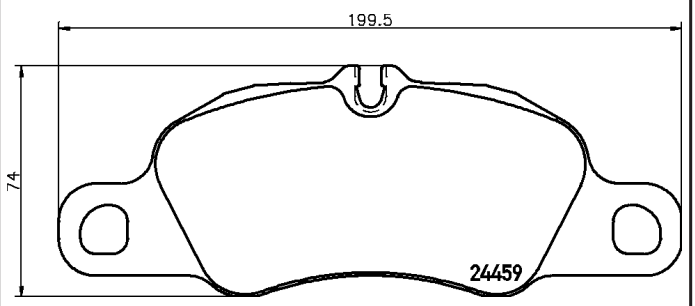

18.5

2446201

24462 167 1 4

CITROËN

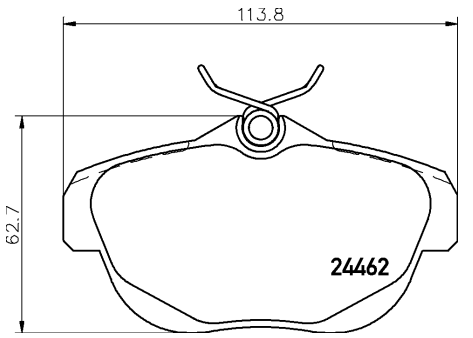

16.7

2446501

24465 188 1 4

CITROËN, FIAT, PEUGEOT

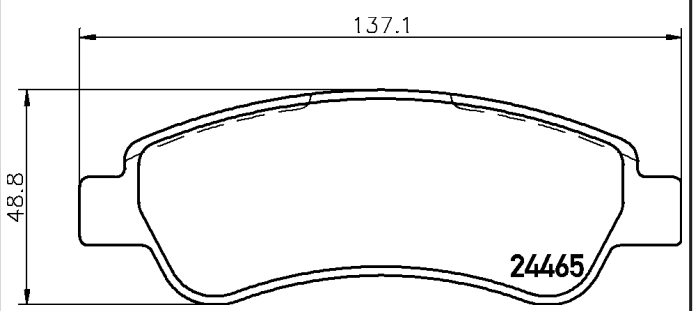

18.8

2446601

24466 190 1 5

CITROËN, FIAT, PEUGEOT

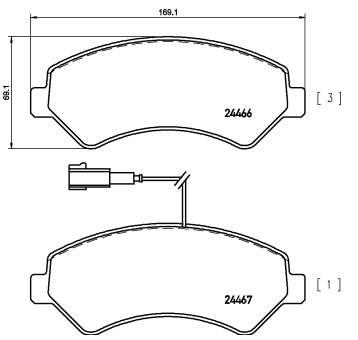

19

2446602

24466 190 2 5

CITROËN, FIAT, PEUGEOT

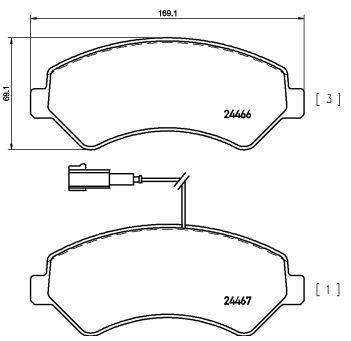

19

2446701

24467 190 1 5

CITROËN, FIAT, PEUGEOT

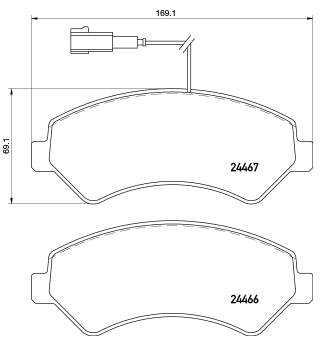

19

2446703

24467 190 3 5

CITROËN, FIAT, PEUGEOT

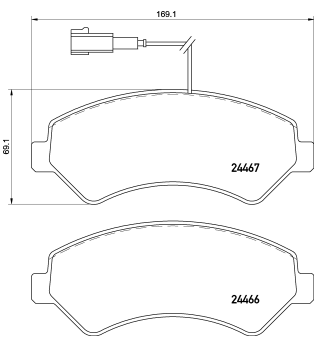

19

2446801

24468 190 1 5

CITROËN, FIAT, PEUGEOT

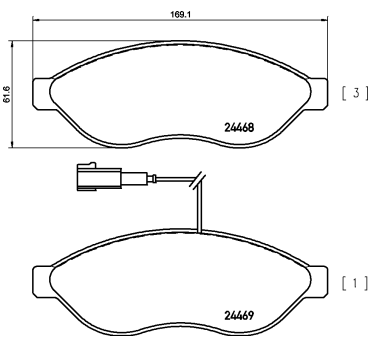

19

2446802

24468 190 2 5

CITROËN, FIAT, PEUGEOT

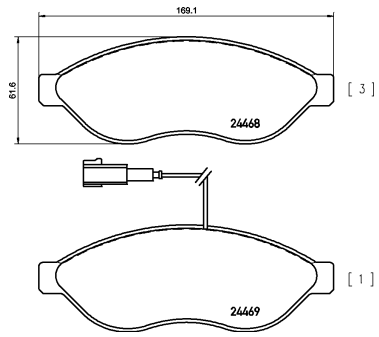

19

2446901

24469 190 1 5

CITROËN, FIAT, PEUGEOT

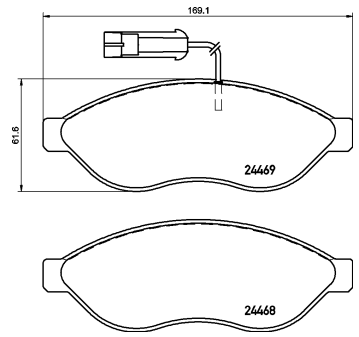

19

2446902

24469 190 2 5

CITROËN, FIAT, PEUGEOT

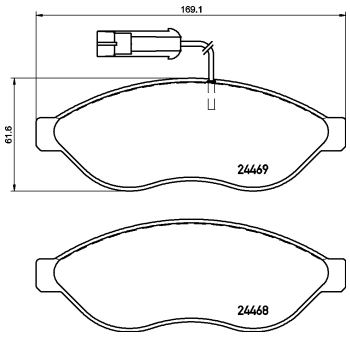

19

2447301

24473 148 0 4

MERCEDES-BENZ

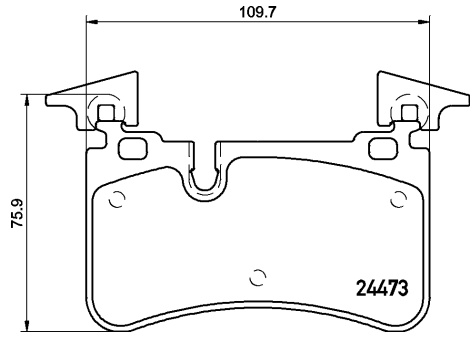

14.8

2447401

24474 178 0 5

JAGUAR

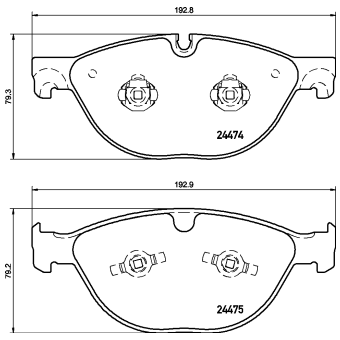

17.8

2447801

24478 148 0 4

MINI

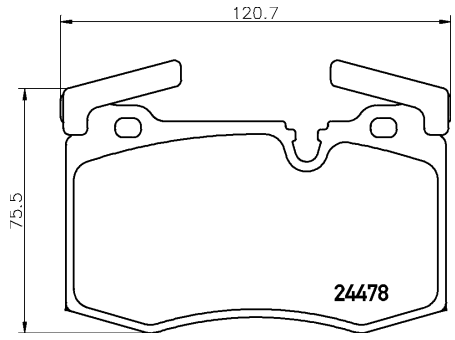

14.8

2448301

24483 172 1 4

AUDI, AUDI (FAW), SEAT, VOLKSWAGEN

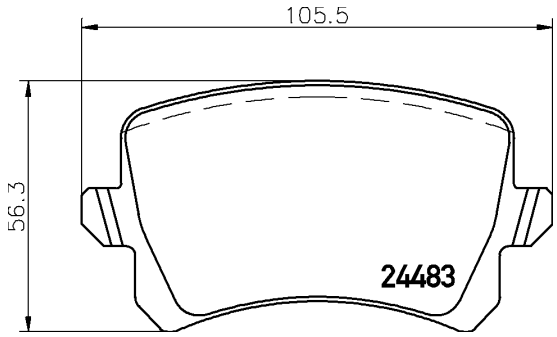

17.2

2448302

24483 172 2 4

VOLKSWAGEN

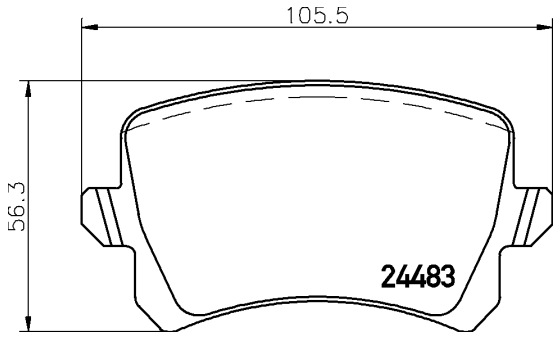

17.2

2448381

24483 172 1 4 epad

AUDI, AUDI (FAW), SEAT, VOLKSWAGEN

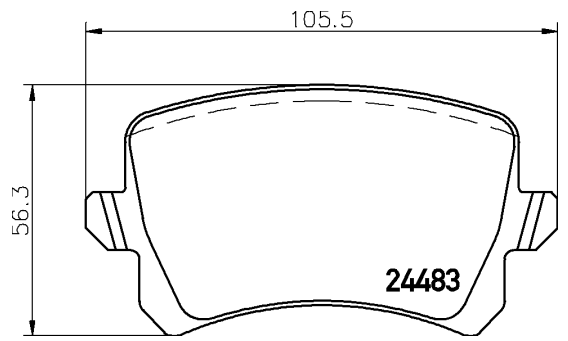

2448382

24483 172 2 4 epad

VOLKSWAGEN

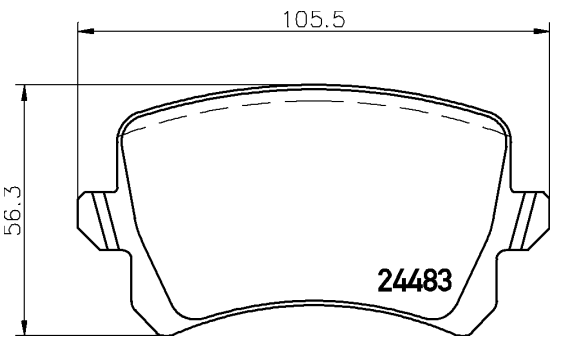

2448401

24484 189 1 4

FORD, FORD AUSTRALIA

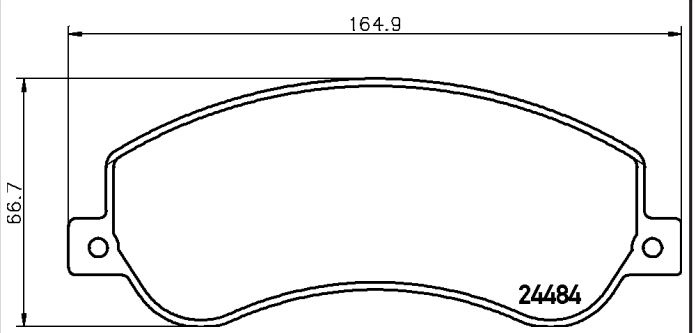

2448404

24484 189 2 4

VOLKSWAGEN

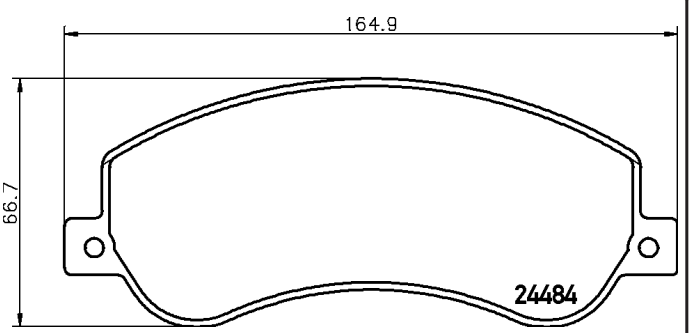

2448501

24485 189 1 4

FORD, FORD AUSTRALIA

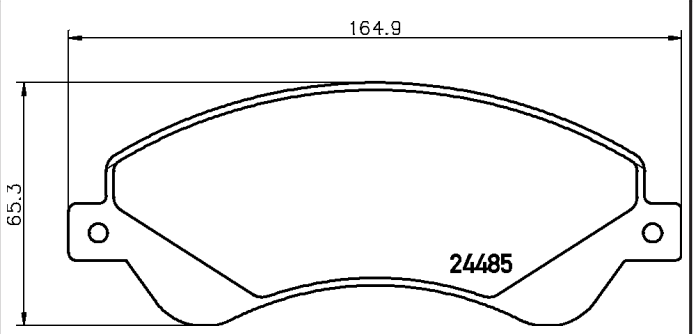

2448601

24486 173 1 4

FORD, FORD AUSTRALIA

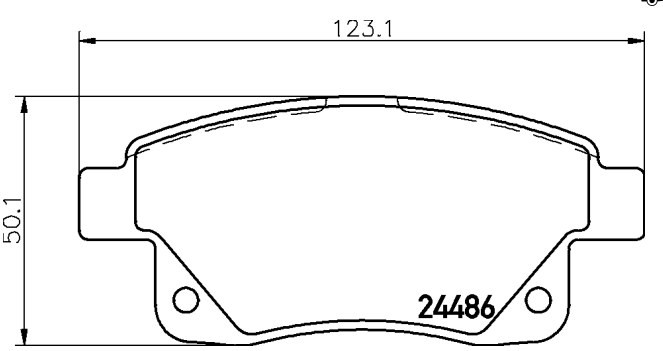

2448701

24487 166 0 5

ASTON MARTIN, DAIMLER, JAGUAR

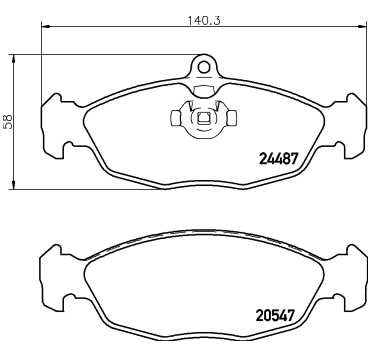

2448801

24488 162 0 5

HAWTAI, HYUNDAI, HYUNDAI (HUATAI)

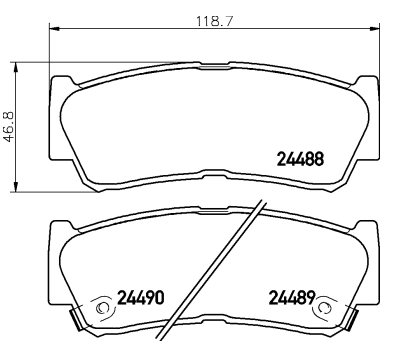

2449101

24491 160 0 5

KIA

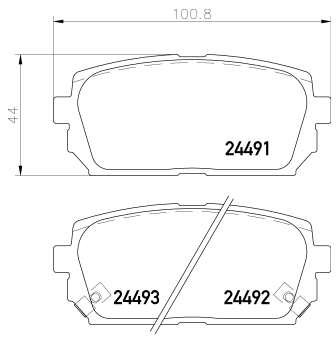

16

2449601

24496 169 1 4

VOLVO, VOLVO (CHANGAN)

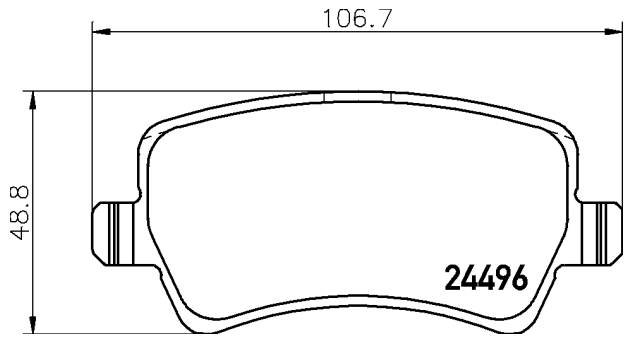

16.9

2449602

24496 169 2 4

FORD, FORD (CHANGAN), LAND ROVER, VOLVO, VOLVO (CHANGAN)

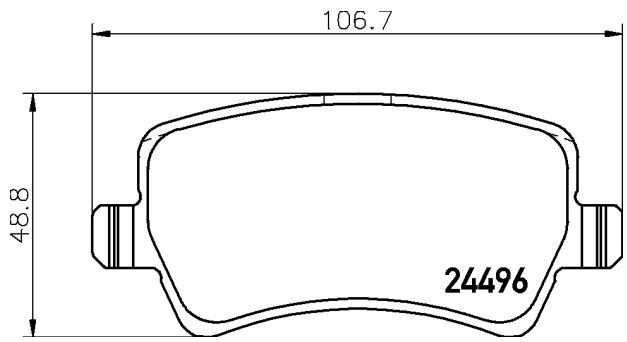

16.9

2449801

24498 154 0 5

CHEVROLET, CHEVROLET (SGM), DAEWOO, HOLDEN, OPEL, PONTIAC, VAUXHALL

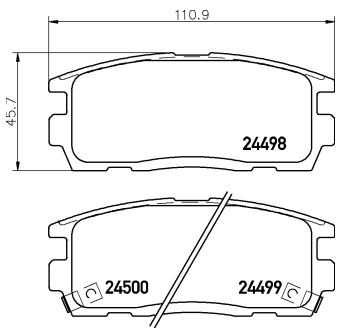

15.4

2450101

24501 166 0 5

KIA

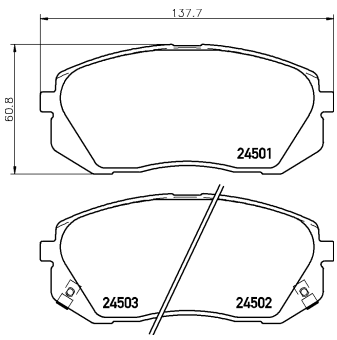

16.6

2450601

24506 148 0 5

JEEP

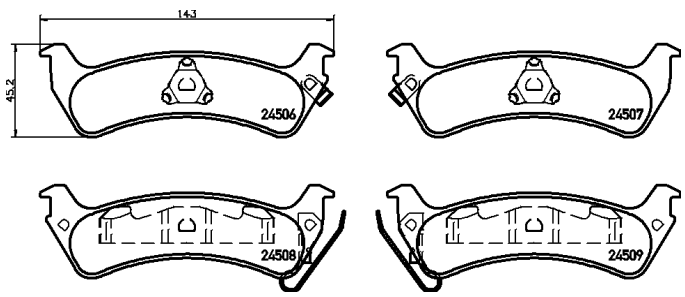

14.8

2451001

24510 169 0 5

CHEVROLET, CHEVROLET (SGM), DAEWOO, HOLDEN, OPEL, PONTIAC, VAUXHALL

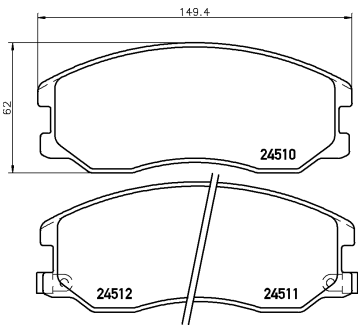

16.9

2451301

24513 178 0 4

FORD AUSTRALIA, FORD USA

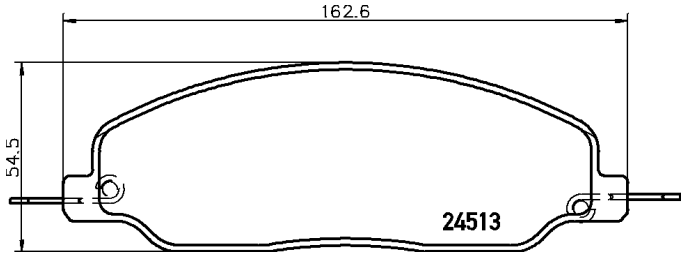

17.8

2451401

24514 173 0 4

FORD USA

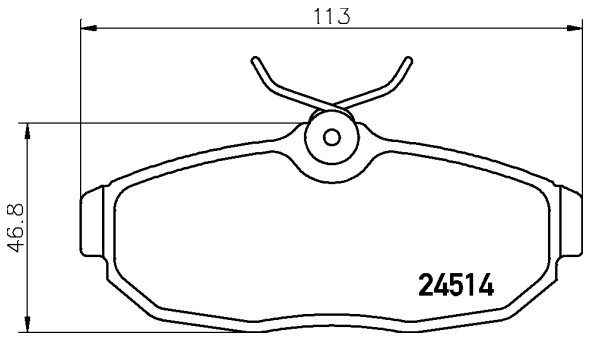

17.3

2451601

24516 167 0 5

AUDI

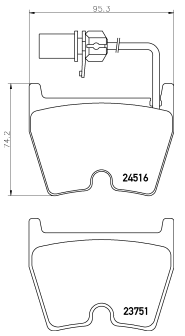

16.7

2451701

24517 167 0 5

AUDI

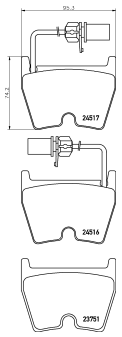

16.7

2452201

24522 169 0 4

TOYOTA

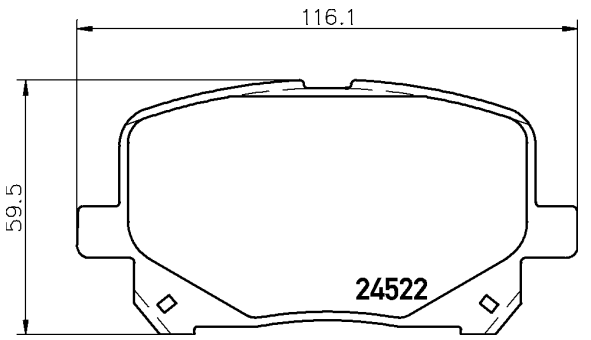

16.9

2452301

24523 164 0 5

CHRYSLER (BBDC), TOYOTA

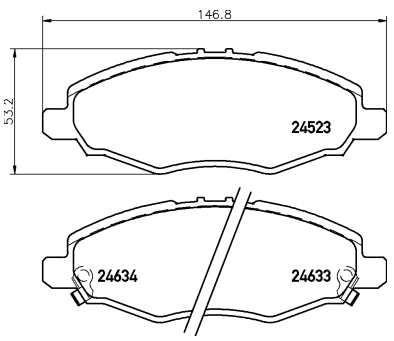

16.4

2452401

24524 194 0 4

BMW

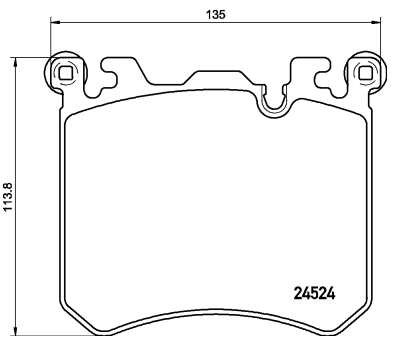

19.4

2452501

24525 155 0 5

FORD AUSTRALIA, FORD USA

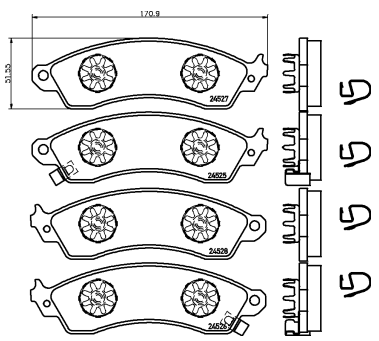

15.5

2452901

24529 160 0 5

MITSUBISHI

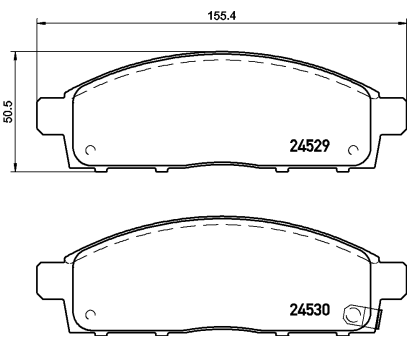

16

2453501

24535 183 0 5

RENAULT

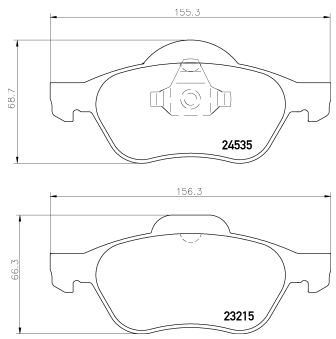

18.3

2453601

24536 183 1 5

RENAULT

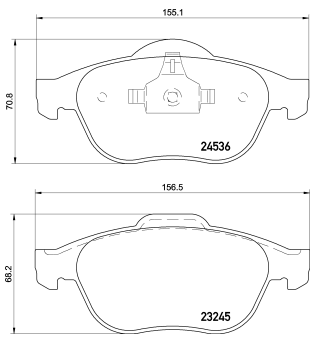

18.3

2453701

24537 157 1 4

LAND ROVER

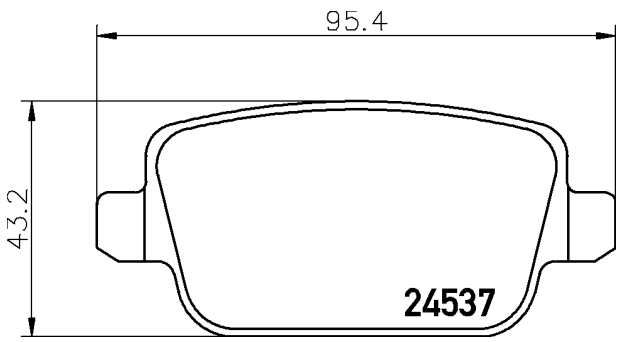

15.7

2453702

24537 157 2 4

LAND ROVER, VOLVO, VOLVO (CHANGAN)

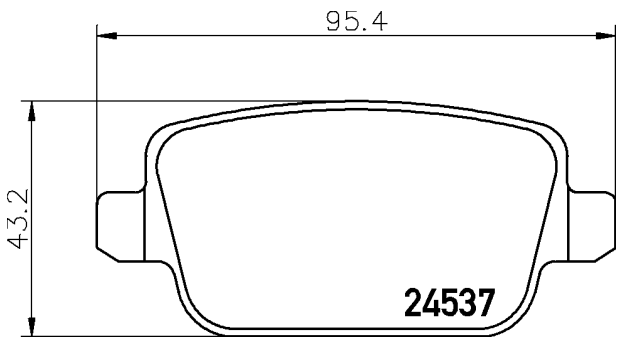

15.7

2453703

24537 157 3 4

FORD, FORD (CHANGAN), FORD AUSTRALIA

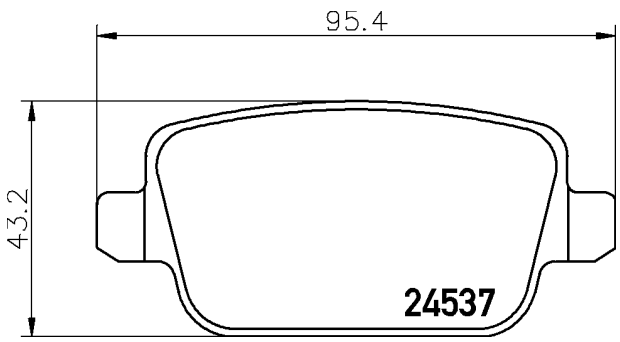

15.7

2453801

24538 188 0 5

CITROËN, PEUGEOT

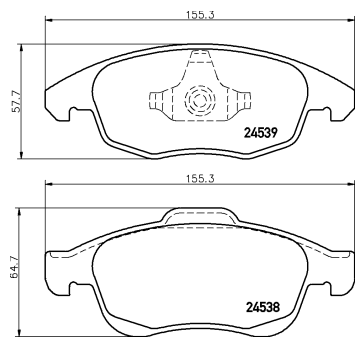

18.8

2454001

24540 164 1 4

CITROËN, PEUGEOT, PEUGEOT (DF-PSA)

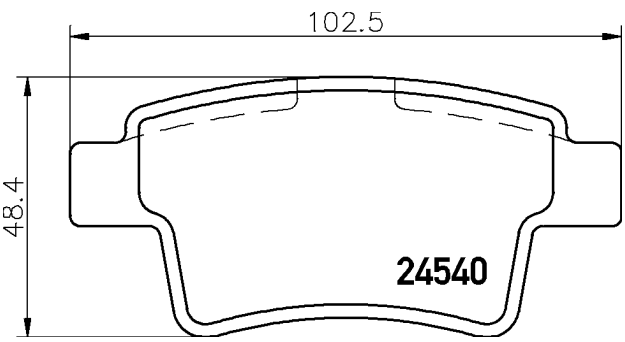

16.4

2454101

24541 155 0 4

PORSCHE

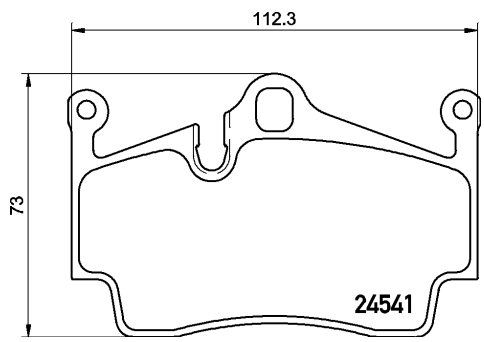

15.5

2454401

24544 175 1 4

FORD USA, LINCOLN, MAZDA

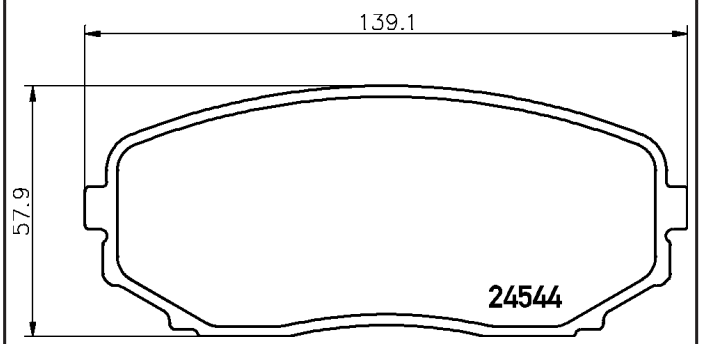

17.5

2454501

24545 179 0 4

FORD USA, LINCOLN, MAZDA

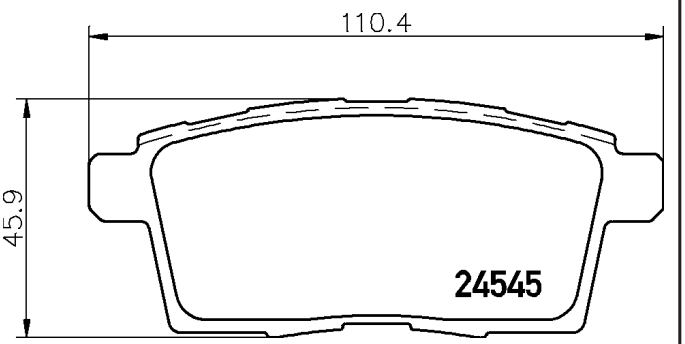

17.9

2454601

24546 172 0 5

CADILLAC, CHEVROLET

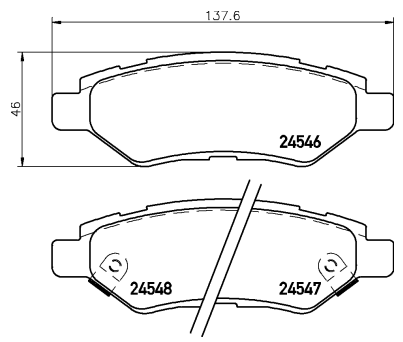

17.2

2454901

24549 194 0 5

FIAT

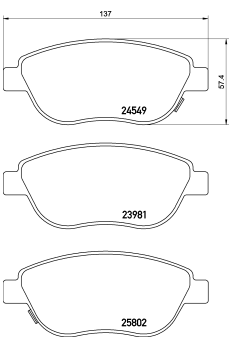

19.4

2455001

24550 202 1 5

OPEL, VAUXHALL

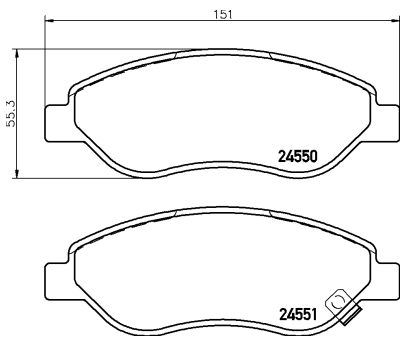

20.2

2455301

24553 161 0 4

PORSCHE, VOLKSWAGEN

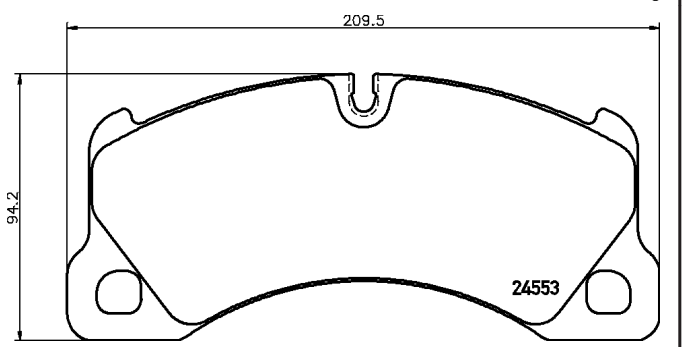

16.1

2455401

24554 160 0 4 T4045

PORSCHE

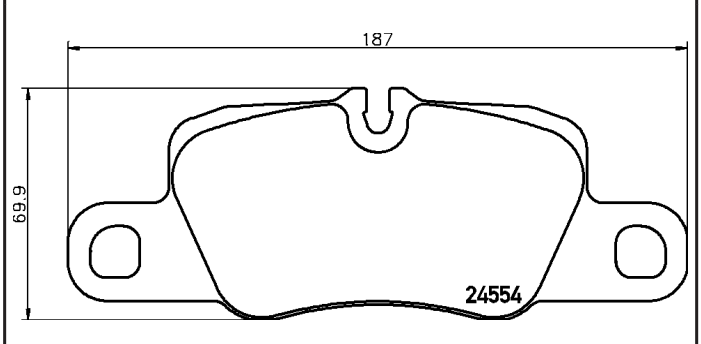

16

2455402

24554 160 0 4 T4997

PORSCHE

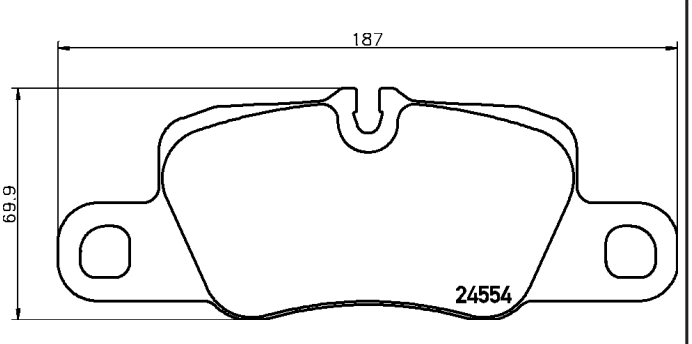

16

2455501

24555 160 0 4

ROVER

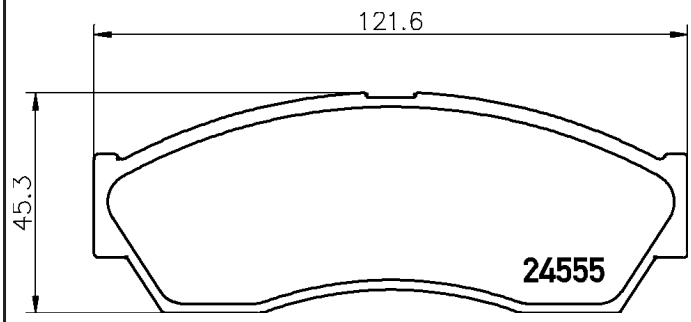

16

2455701

24557 190 0 5

CITROËN

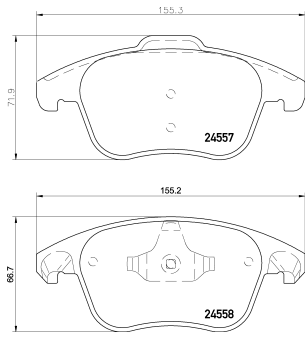

19

2455801

24558 180 0 5

CITROËN, PEUGEOT

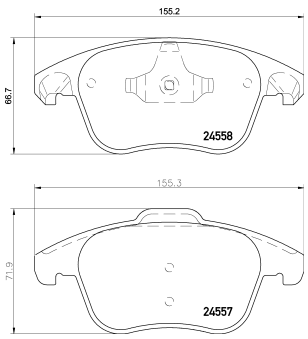

18

2455901

24559 180 1 5

BMW

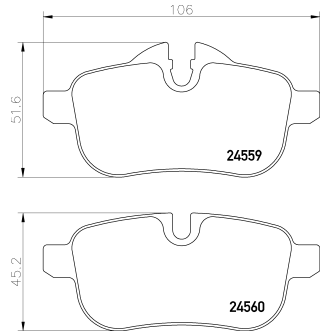

18

2455902

24559 180 1 5

BMW

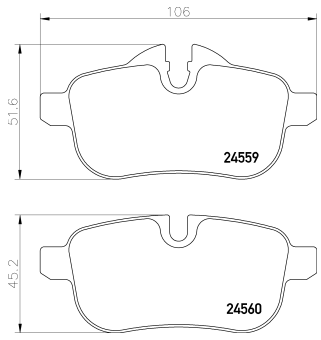

18

2456101

24561 180 1 5

BMW, BMW (BRILLIANCE)

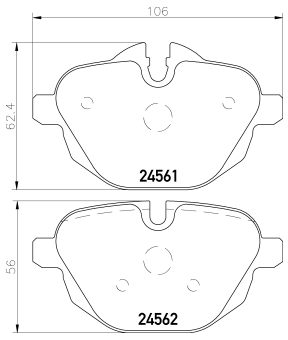

18

2456181

24561 180 1 5 epad

BMW, BMW (BRILLIANCE)

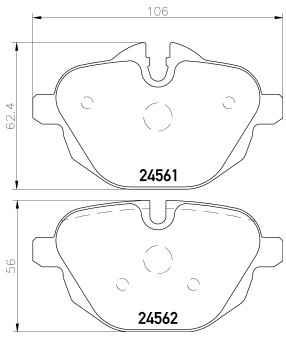

18

2456301

24563 177 1 4

AUDI, SEAT, SKODA, VOLKSWAGEN

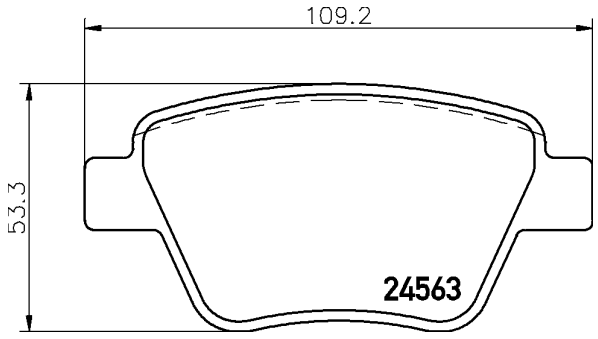

17.7

Illustrations

2456501

24565 162 0 5

KIA

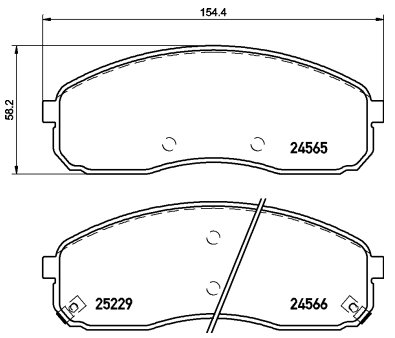

16.2

2456701

24567 155 0 4

TOYOTA

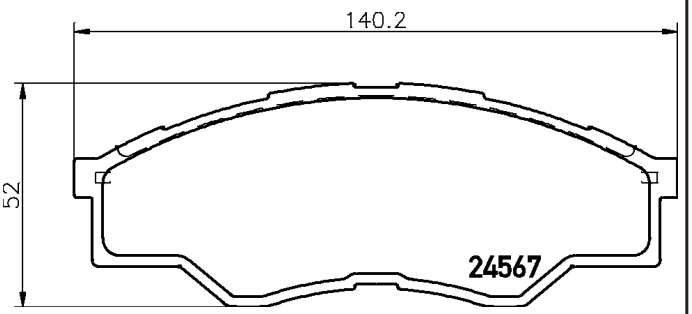

15.5

2457401

24574 150 0 5

DAIHATSU, TOYOTA

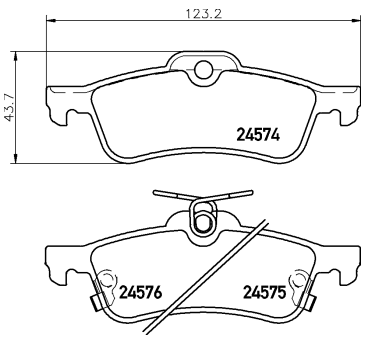

15

2457801

24578 166 1 4

CITROËN, FIAT, PEUGEOT, TOYOTA

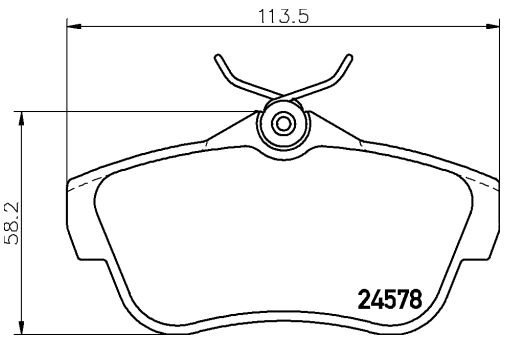

16.6

2458002

24580 170 0 4 T4136

FORD USA, MERCURY

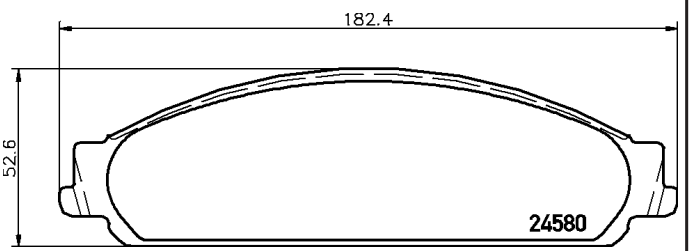

17

2458101

24581 150 0 4

FORD, FORD USA, LINCOLN, MAZDA (FAW)

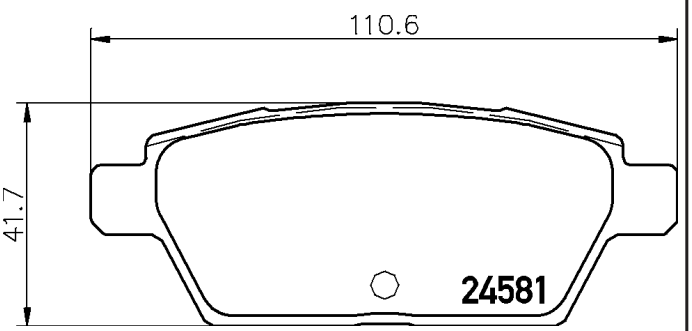

15

2458102

24581 143 0 4

MAZDA

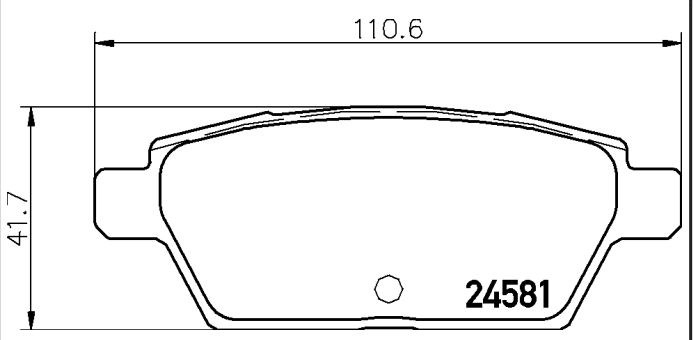

14.3

2458201

24582 184 0 4

FORD, FORD USA, LINCOLN

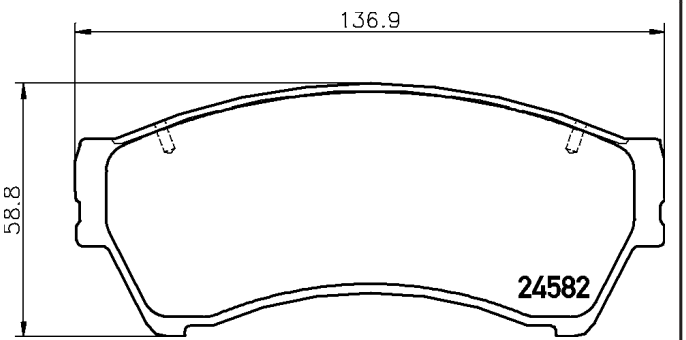

18.4

2458202

24582 184 0 5

LINCOLN, MAZDA, MAZDA (FAW)

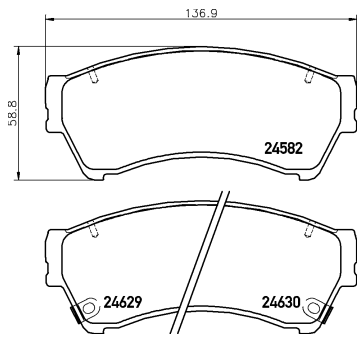

18.4

2458301

24583 170 1 4

CHRYSLER, CHRYSLER (BBDC), DODGE, JEEP

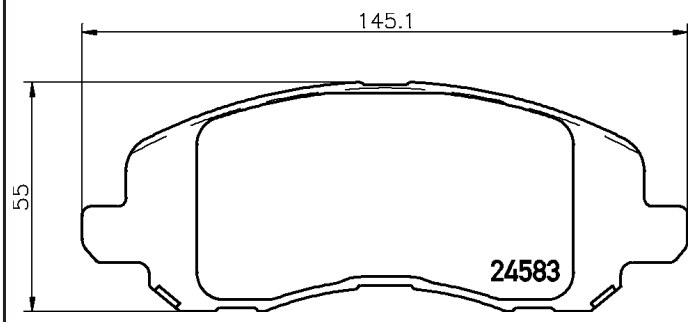

17

2458501

24585 180 0 4

NISSAN

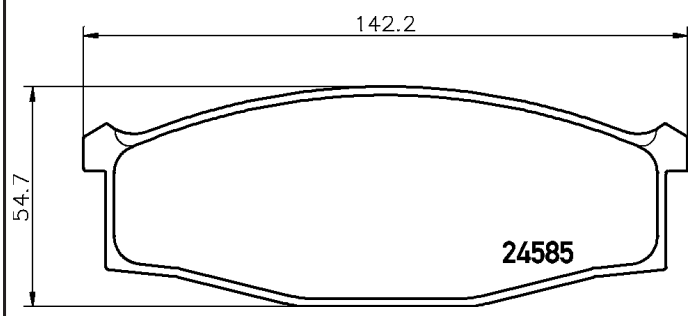

18

2458601

24586 178 1 5

HYUNDAI, KIA

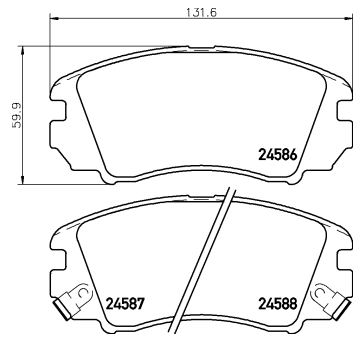

17.8

2459501

24595 183 1 5

CITROËN, FIAT, PEUGEOT, TOYOTA

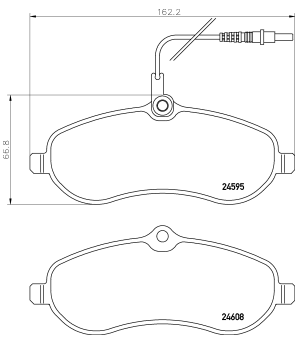

18.3

2459701

24597 176 1 5

DODGE, HYUNDAI, KIA

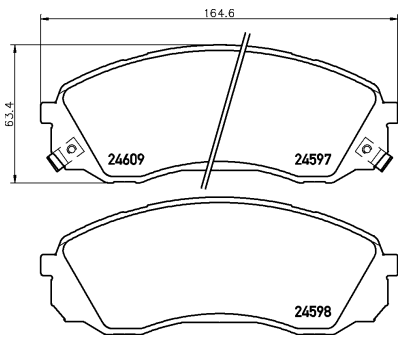

17.6

2459901

24599 155 1 5

DODGE, HYUNDAI, KIA

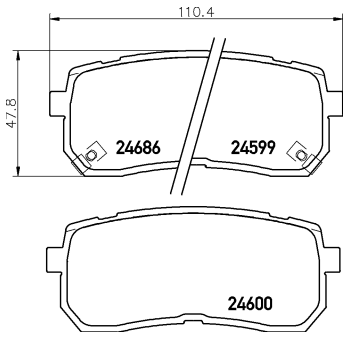

15.5

2460101

24601 180 0 4

TOYOTA

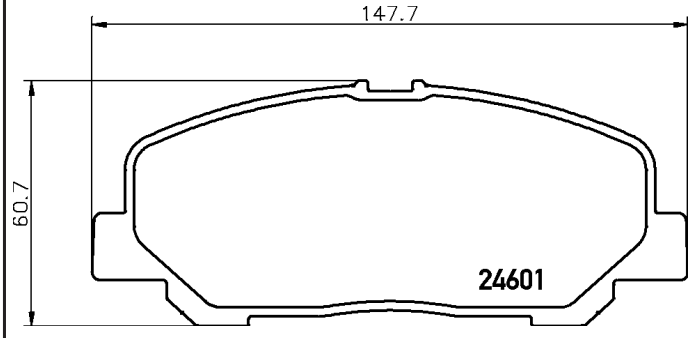

18

2460201

24602 160 1 5

DODGE, JEEP

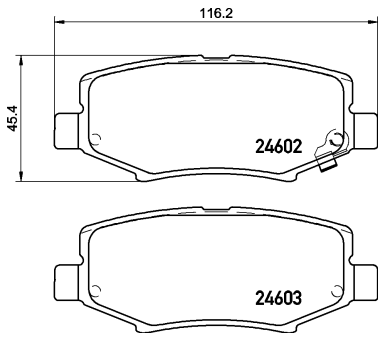

16

2460401

24604 185 1 5

CHRYSLER, DODGE, FIAT, JEEP

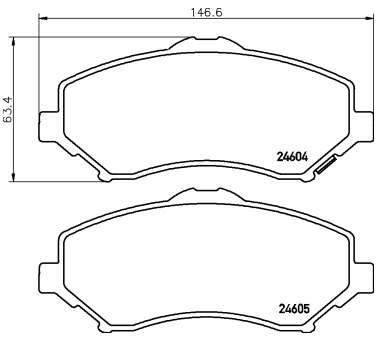

18.5

2460402

24604 175 1 5

DODGE, JEEP, VOLKSWAGEN

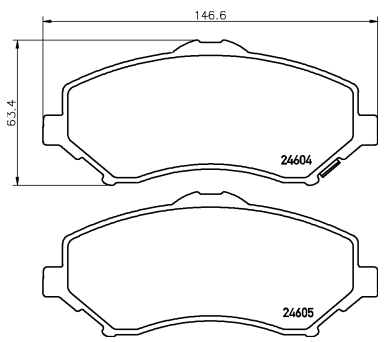

17.5

2460601

24606 177 1 4

AUDI, AUDI (FAW)

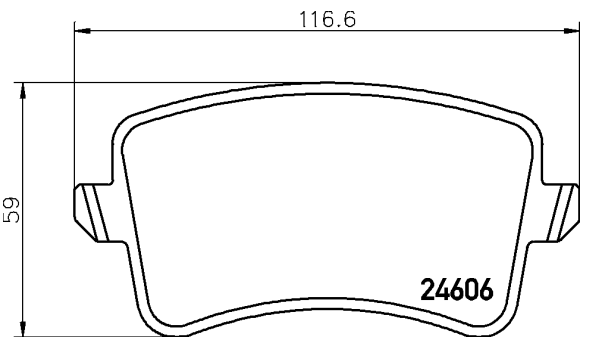

17.7

2460602

24606 177 2 4

AUDI, AUDI (FAW)

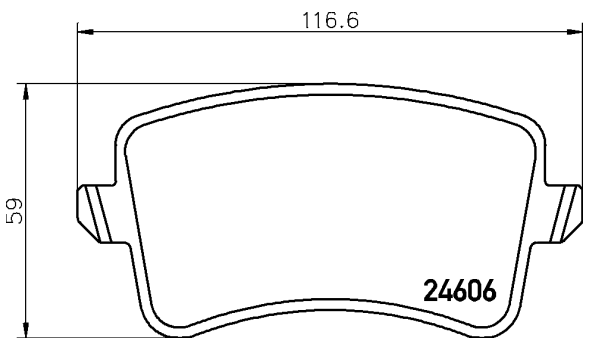

17.7

2460681

24606 177 1 4 epad

AUDI

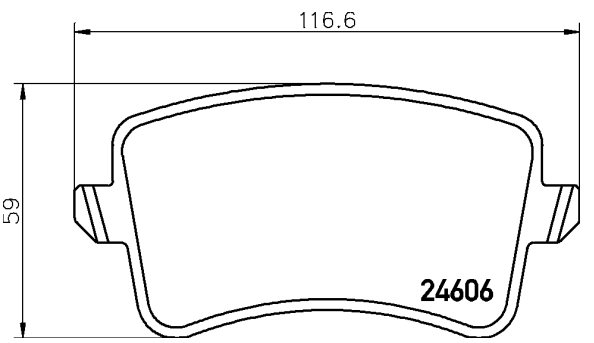

17.7

2460682

24606 177 2 4 epad

AUDI, AUDI (FAW)

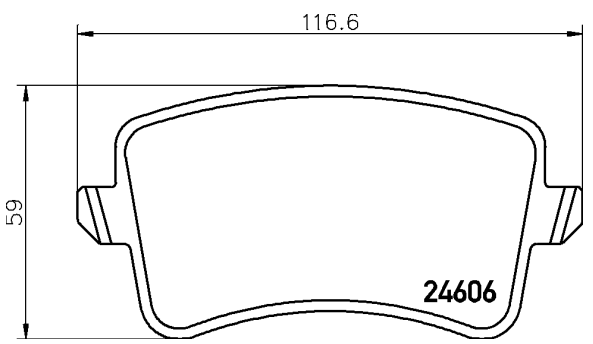

17.7

2461001

24610 143 0 5

ASTON MARTIN, SUBARU, TOYOTA, TOYOTA (FAW)

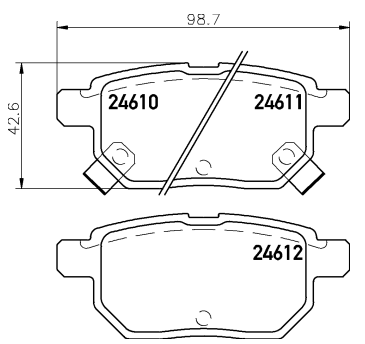

14.3

2461401

24614 166 0 4

AUDI, PORSCHE, VOLKSWAGEN

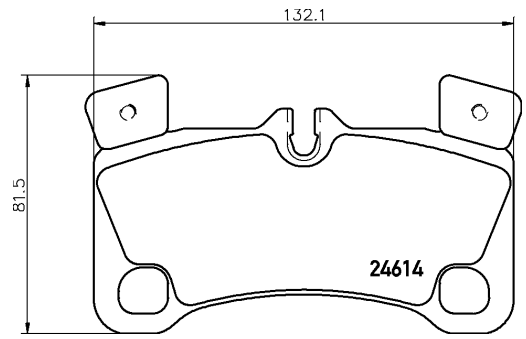

16.6

2461501

24615 169 0 5

CADILLAC

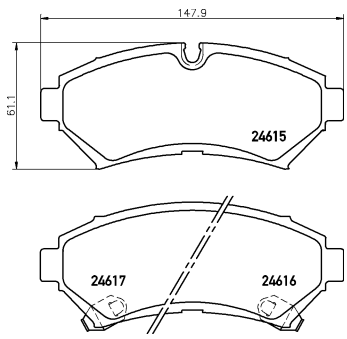

16.9

2461801

24618 178 1 5

HYUNDAI

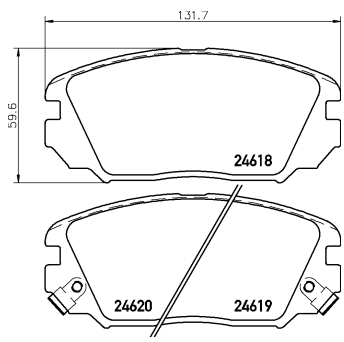

17.8

2462301

24623 181 0 5

VOLKSWAGEN

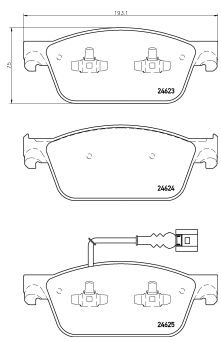

18.1

2463201

24632 170 0 4

NISSAN, NISSAN (DONGFENG)

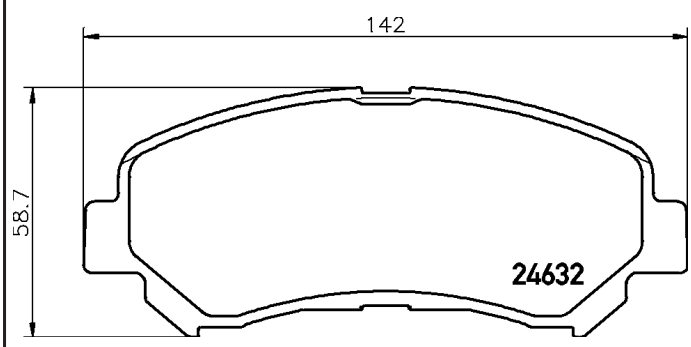

17

2463501

24635 165 1 5

HONDA

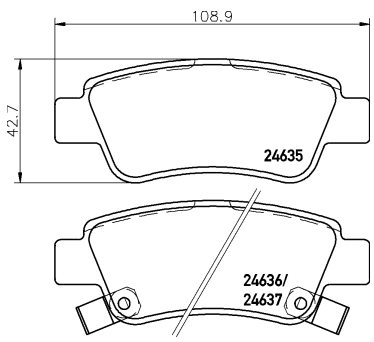

16.5

2463801

24638 190 1 5

HONDA

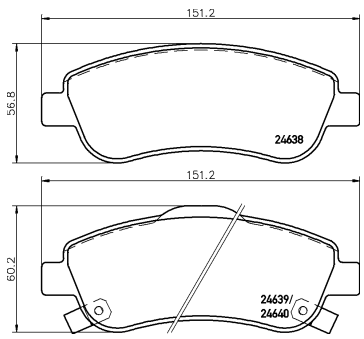

19

2464101

24641 177 0 4

PORSCHE

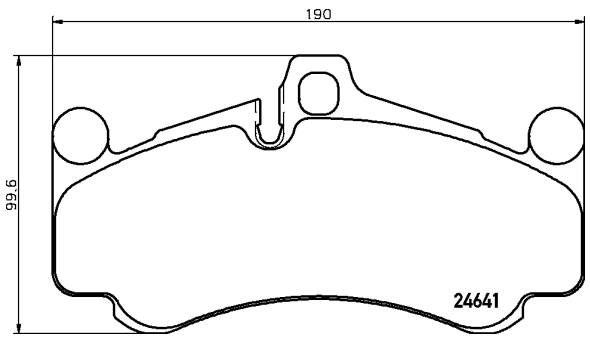

17.7

2464701

24647 154 0 5

NISSAN

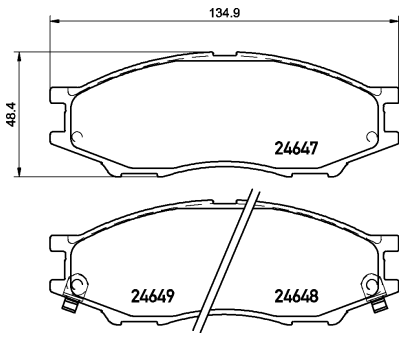

15.4

2465301

24653 174 0 4

LEXUS, TOYOTA

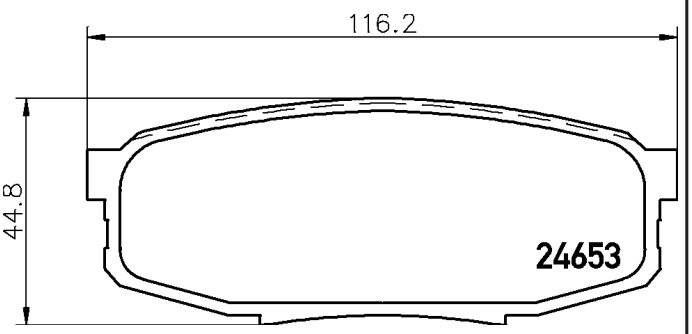

17.4

2465901

24659 169 0 4

LAND ROVER

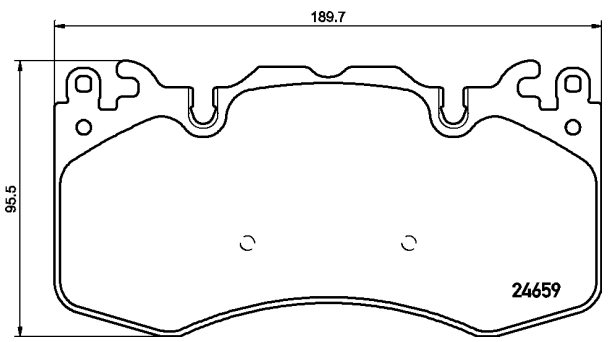

16.9

2466001

24660 178 1 4

PEUGEOT, PEUGEOT (DF-PSA)

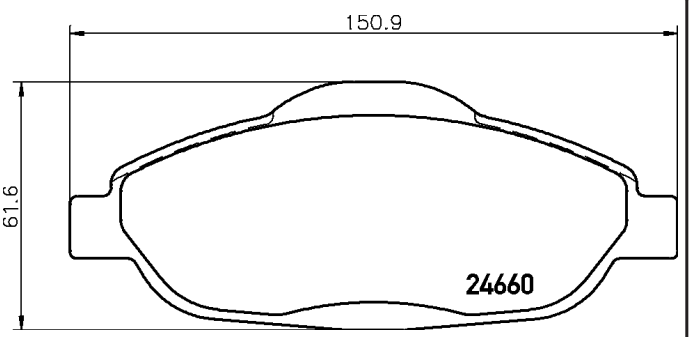

17.8

2466301

24663 140 0 4

IVECO, SANTANA, SUZUKI

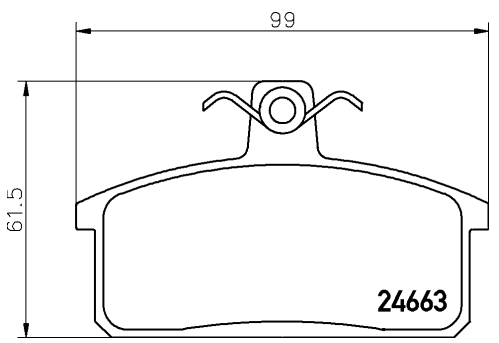

14

2466401

24664 160 1 5

TOYOTA

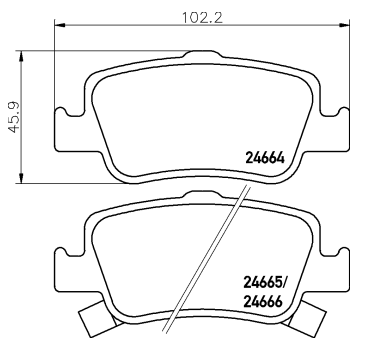

16

2466801

24668 189 1 5

TOYOTA

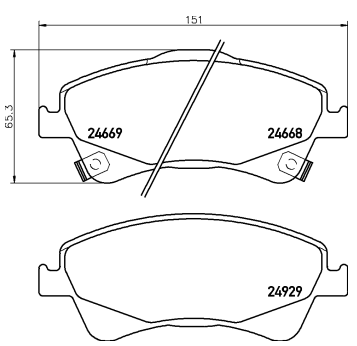

18.9

2467001

24670 171 0 5

FORD, FORD AUSTRALIA, FORD USA, MAZDA, MERCURY

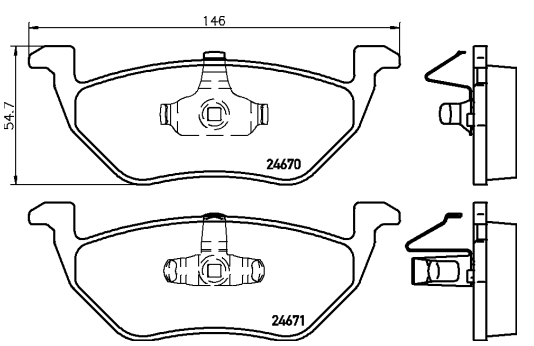

17.1

Illustrations

2467301

24673 180 0 5

DACIA, LADA, RENAULT

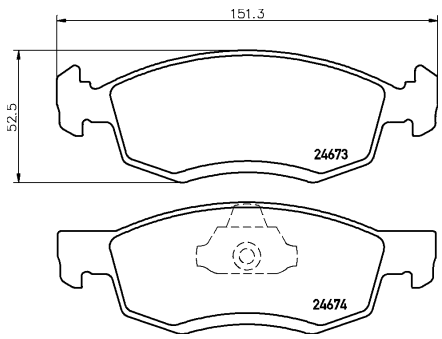

18

2468001

24680 155 0 4

TOYOTA

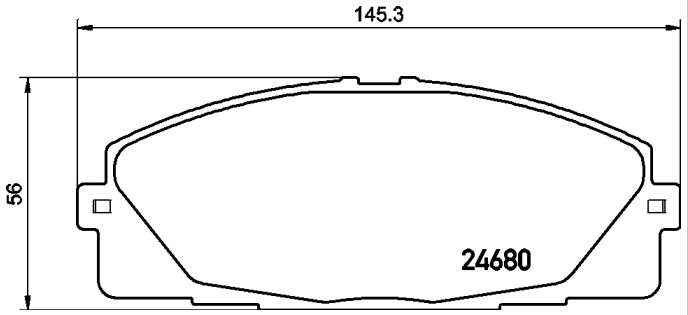

15.5

2468201

24682 14,2 0 5

NISSAN

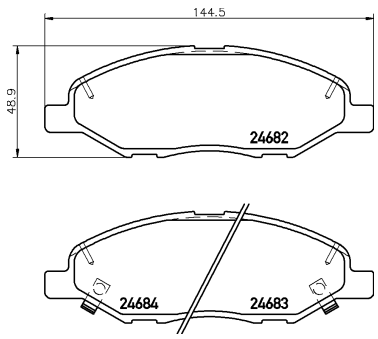

14.2

2468501

24685 171 0 4

PORSCHE

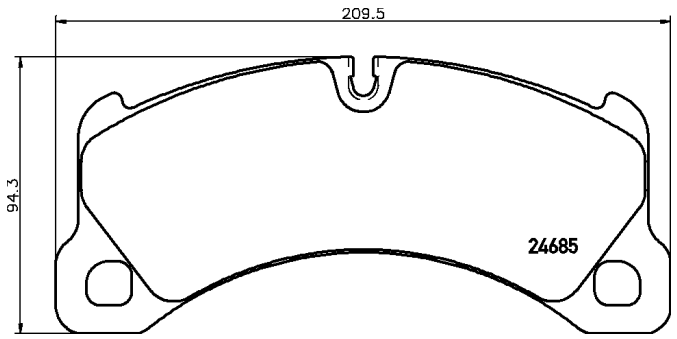

17.1

2468701

24687 153 0 5

FIAT

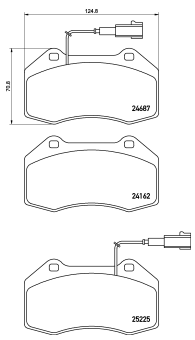

15.3

2468801

24688 192 0 5

BMW

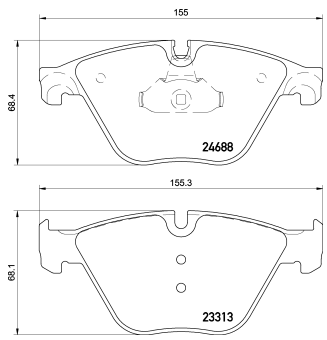

19.2

2468881

24688 192 0 5 epad

BMW

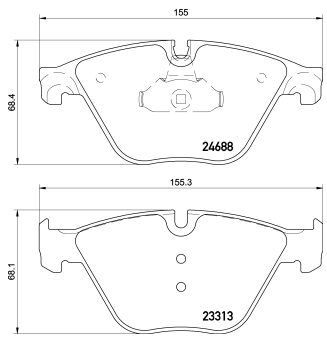

19.2

2469201

24692 150 1 4

RENAULT

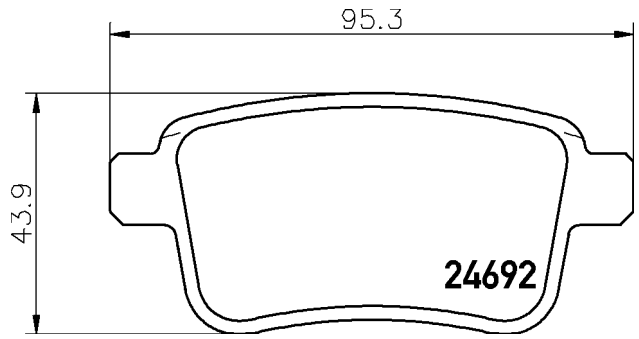

15

2469204

24692 160 2 4

MERCEDES-BENZ

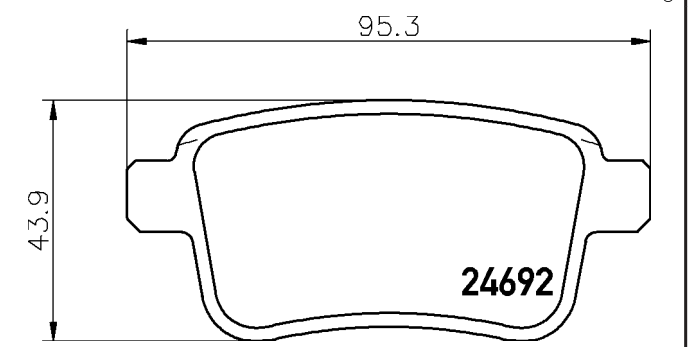

16

2469301

24693 187 1 4

MERCEDES-BENZ, RENAULT

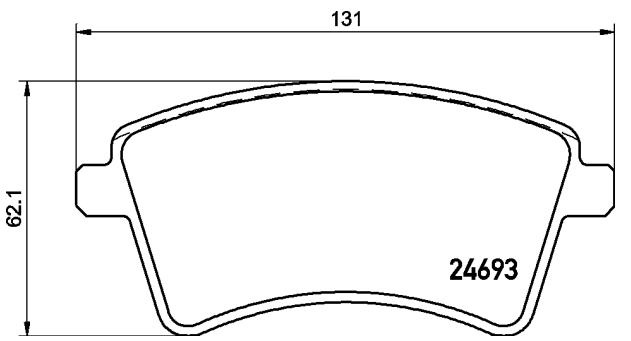

18.7

2469306

24693 176 3 5

RENAULT

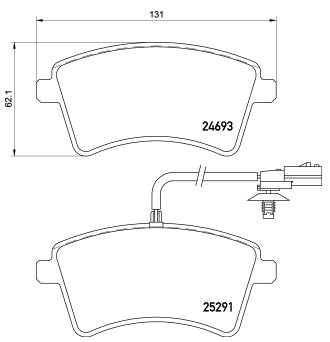

17.6

2469701

24697 193 0 5

BMW, BMW (BRILLIANCE)

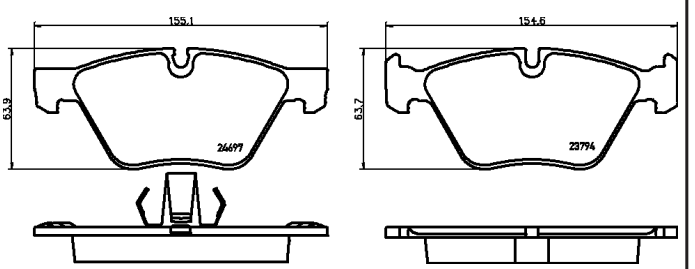

19.3

2469781

24697 193 0 5 epad

BMW, BMW (BRILLIANCE)

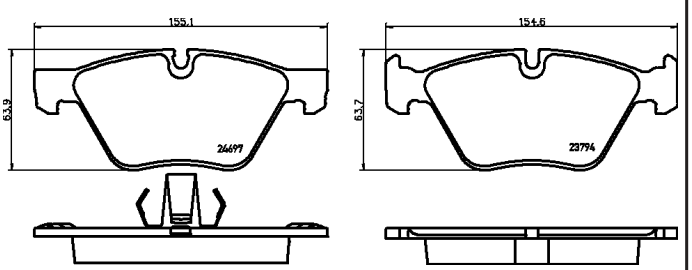

19.3

2470301

24703 180 1 5

BMW

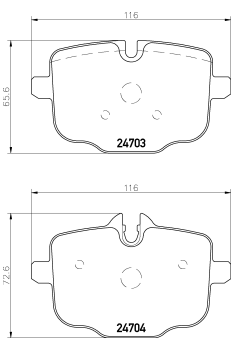

18

2470381

24703 180 1 5 epad

BMW

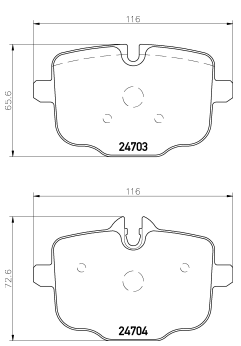

18

2470601

24706 200 0 5

AUDI, AUDI (FAW)

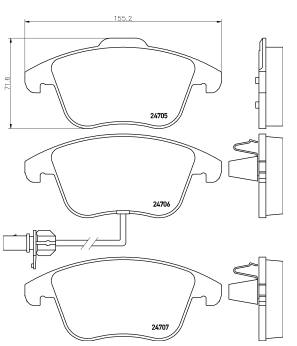

20

Illustrations

2470681

24706 200 0 5 epad

AUDI, AUDI (FAW)

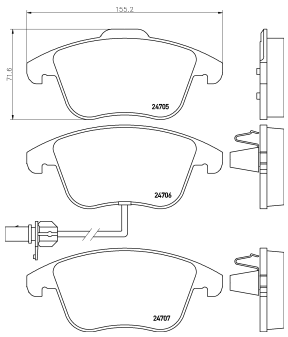

20

2470801

24708 176 0 4

DAIHATSU, TOYOTA

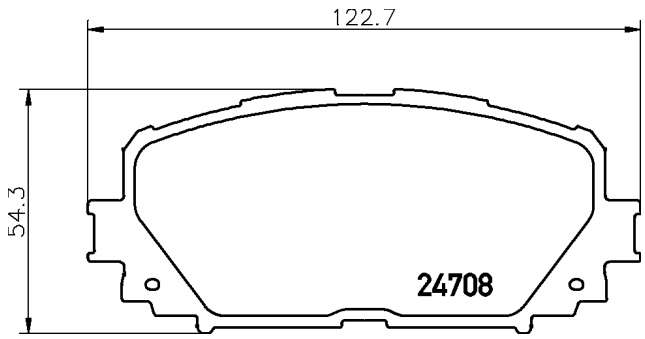

17.6

2470901

24709 180 0 5

RENAULT

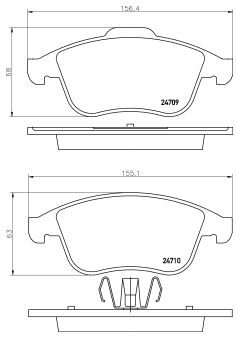

18

2471001

24710 180 0 5

RENAULT

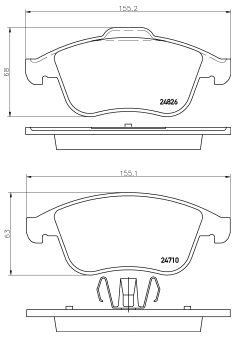

18

2471101

24711 162 0 5

PONTIAC

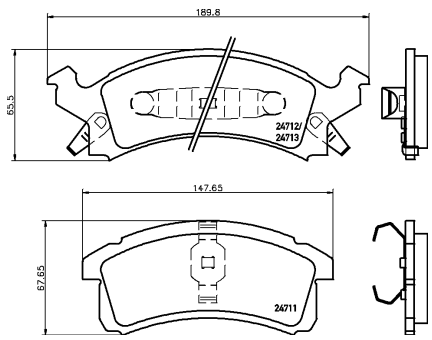

16.2

2471401

24714 178 0 5

PONTIAC

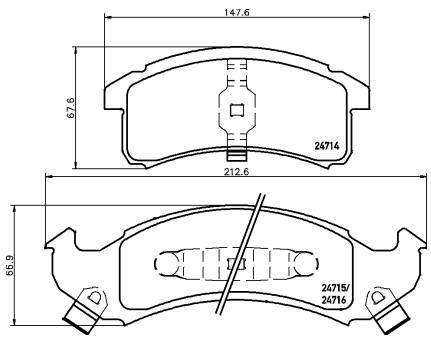

15.9

2471701

24717 173 0 5

CHEVROLET, PONTIAC

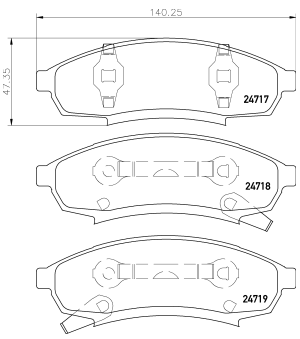

17.3

2472101

24721 172 0 4

PORSCHE, VOLKSWAGEN

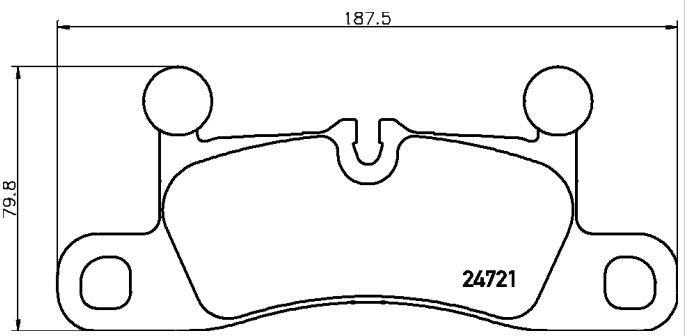

17.2

2472102

24721 174 0 4

PORSCHE

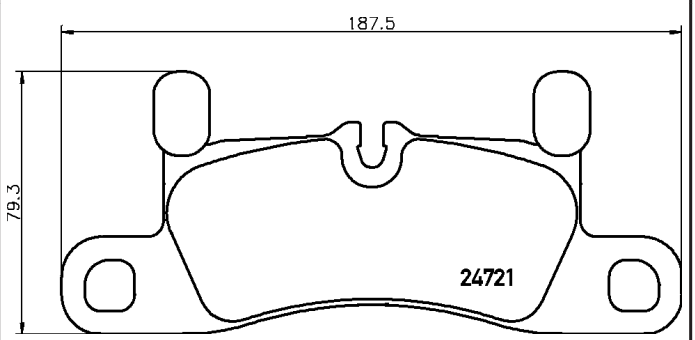

17.4

2472201

24722 190 0 5

MERCEDES-BENZ

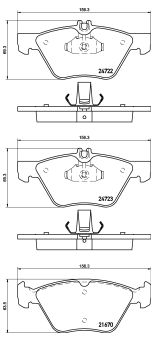

19

2472281

24722 190 0 5 epad

MERCEDES-BENZ

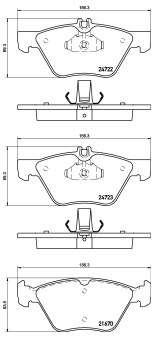

19

2472401

24724 140 0 5

NISSAN, NISSAN (DONGFENG)

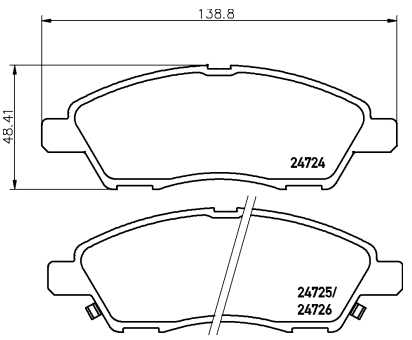

14

2472701

24727 200 0 5

CHRYSLER, FIAT, LANCIA, OPEL, VAUXHALL

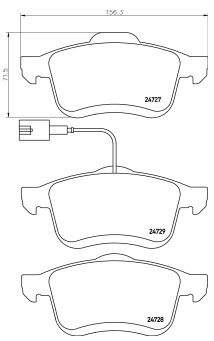

20

2473001

24730 103 0 5

AIXAM, LIGIER, PIAGGIO

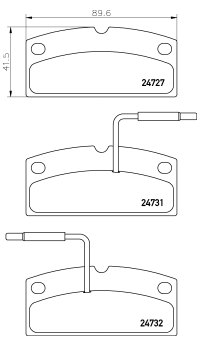

10.2

2473301

24733 153 0 4

MERCEDES-BENZ

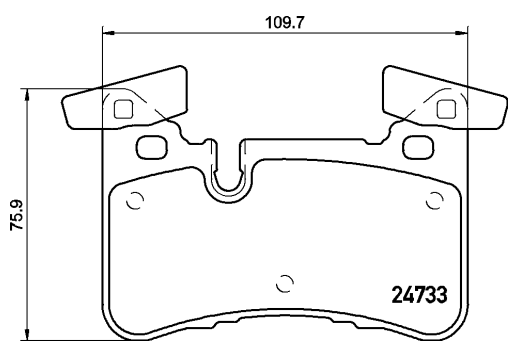

15.3

2473401

24734 103 0 5

AIXAM

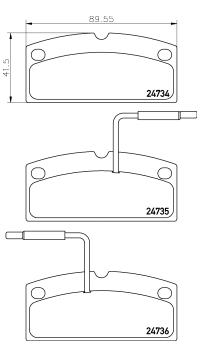

10.2

2473701

24737 176 1 4

CITROËN, CITROËN (DF-PSA), PEUGEOT, PEUGEOT (DF-PSA)

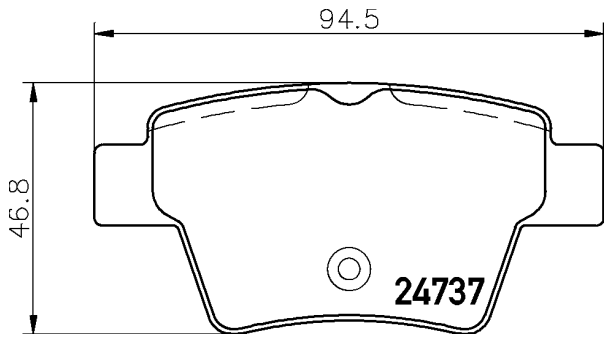

18

2473801

24738 200 1 5

AUDI, SEAT, SKODA, VOLKSWAGEN

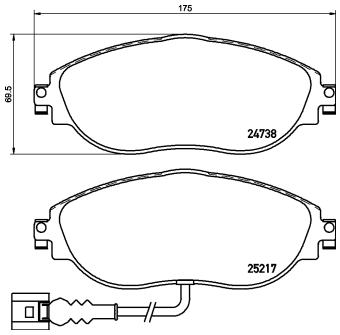

20

2473901

24739 173 1 5

MERCEDES-BENZ, VOLKSWAGEN

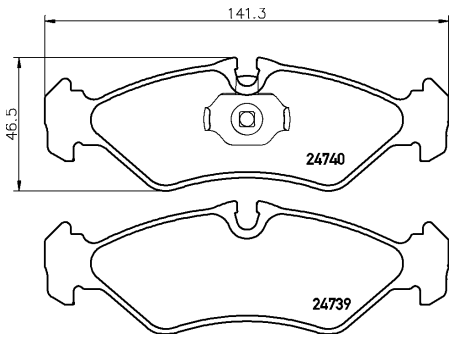

17.3

2474301

24743 194 1 5

AUDI, AUDI (FAW)

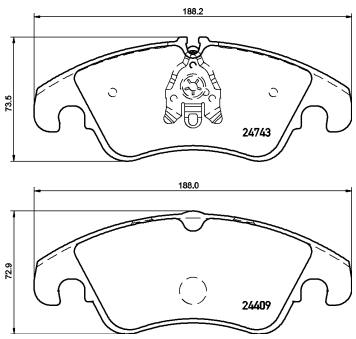

19.4

2474302

24743 187 0 5

FORD

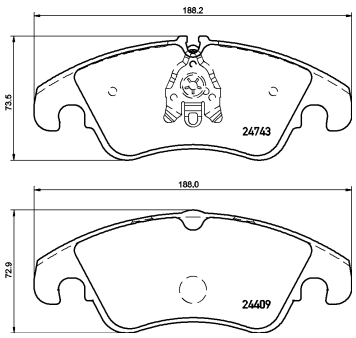

18.7

2474381

24743 194 1 5 epad

AUDI, AUDI (FAW)

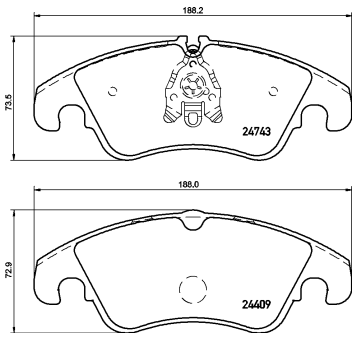

19.4

2474401

24744 147 0 5

CHEVROLET, CHEVROLET (SGM), HOLDEN

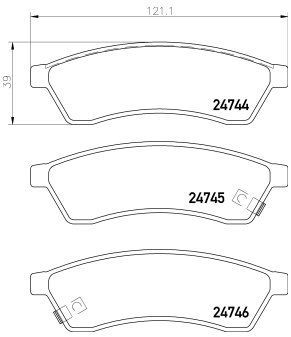

14.7

2475001

24750 167 0 5

CADILLAC

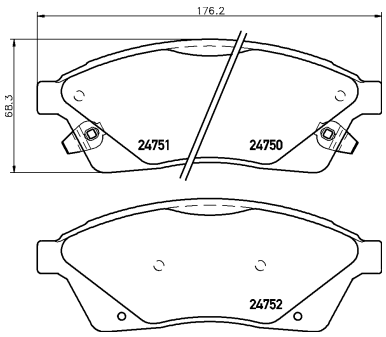

16.7

2475301

24753 165 0 5

FORD USA, LINCOLN

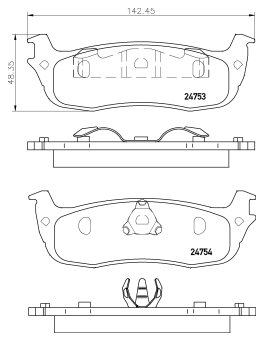

16.5

2475501

24755 158 0 4

LINCOLN

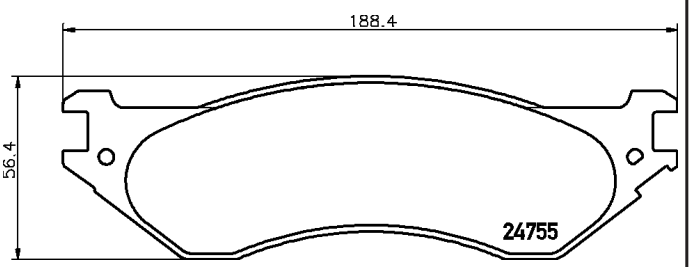

15.8

2475701

24757 163 0 5

FORD USA, LINCOLN

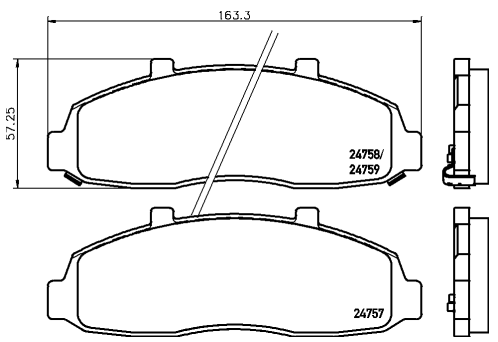

16.3

2476001

24760 142 0 5

LINCOLN

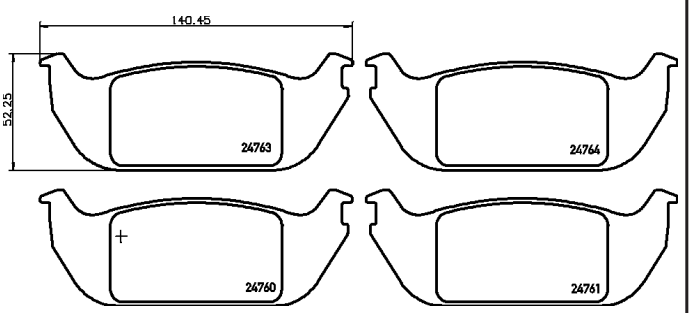

14.2

2476401

24764 177 1 5

FORD

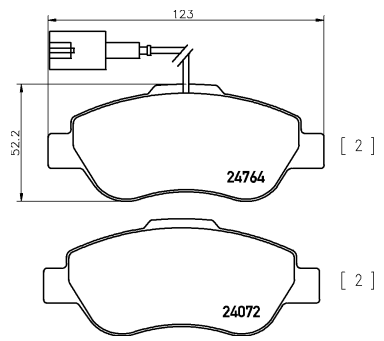

17.7

2476501

24765 166 1 4

CITROËN, PEUGEOT

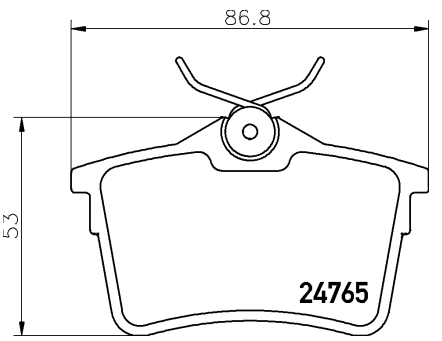

16.6

2476601

24766 162 1 5

HONDA

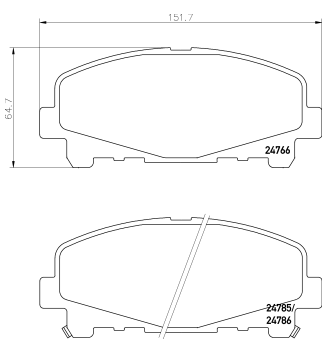

17.5

2477201

24772 174 0 4

FORD USA, LINCOLN

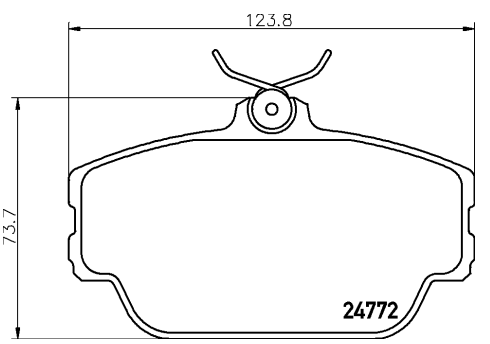

17.4

2477601

24776 155 0 5

FORD USA

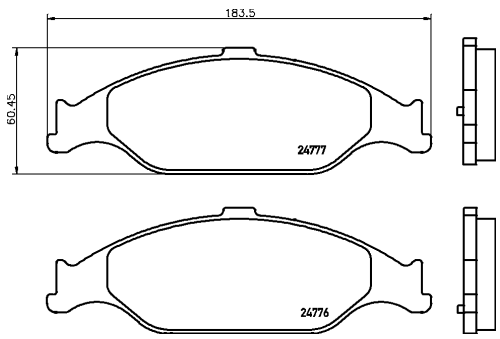

15.4

2477801

24778 166 0 5

ASTON MARTIN, TOYOTA

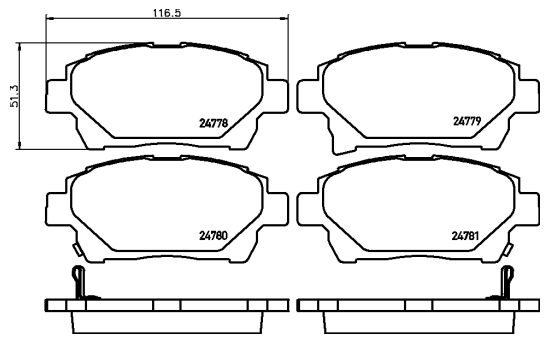

16.6

2479301

24793 195 0 5

CHEVROLET, OPEL, PONTIAC

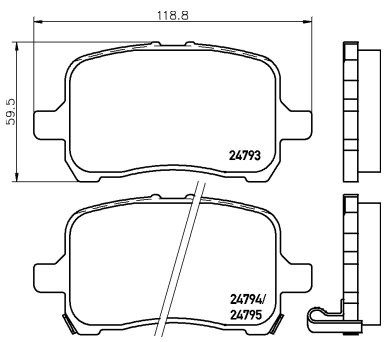

19.5

2479601

24796 175 0 5

HONDA

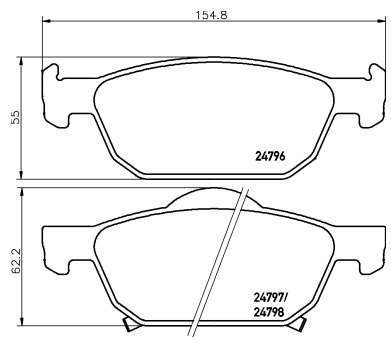

17.5

2479901

24799 169 0 4

FORD USA, MERCURY

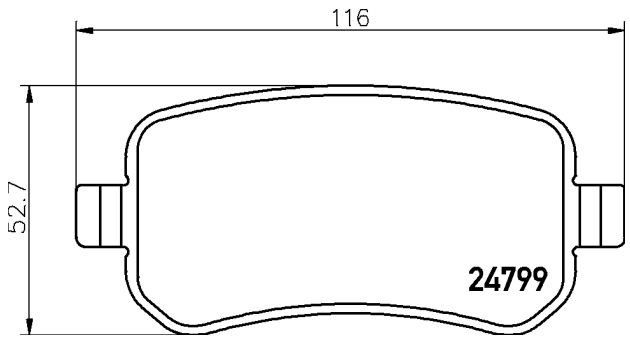

16.9

2480501

24805 180 1 4

HONDA

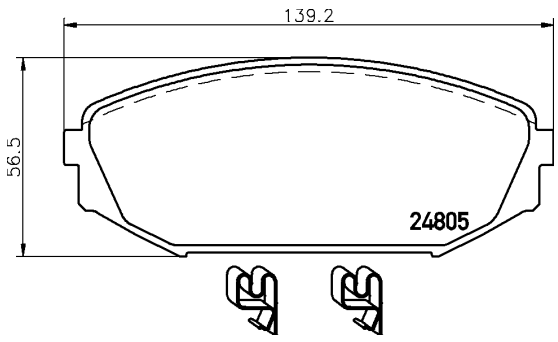

18

2481301

24813 180 0 5

TOYOTA

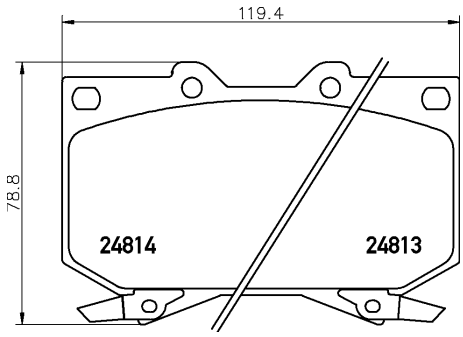

18

2481501

24815 145 0 5

BUICK (SGM), HOLDEN, HSV, VAUXHALL

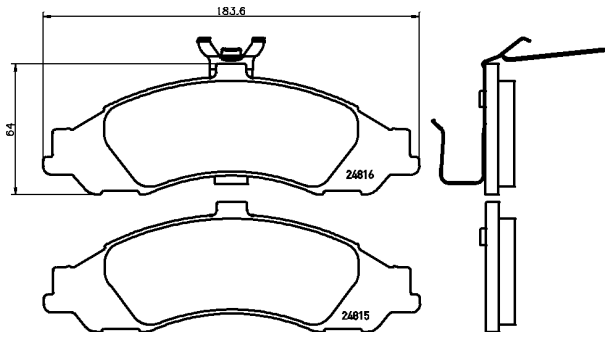

14.5

2481701

24817 170 1 4

CHEVROLET, PONTIAC

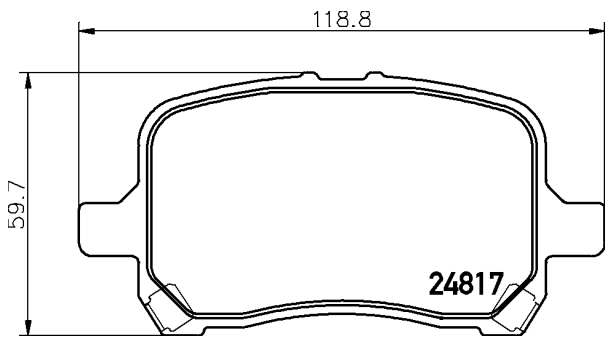

17

2481801

24818 185 0 5

HOLDEN, HSV, VAUXHALL

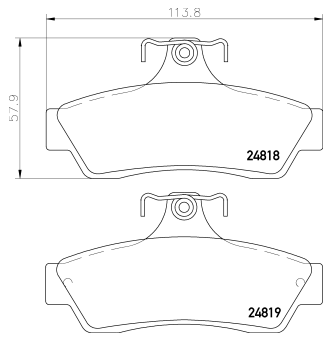

18.5

2482001

24820 157 1 4

RENAULT

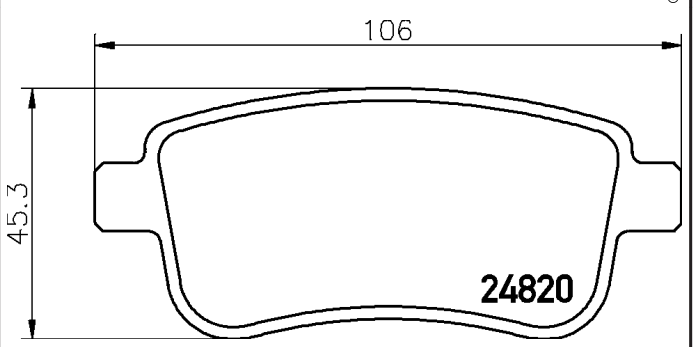

15.7

2482201

24822 170 1 4

CHRYSLER, DODGE, FIAT, VOLKSWAGEN

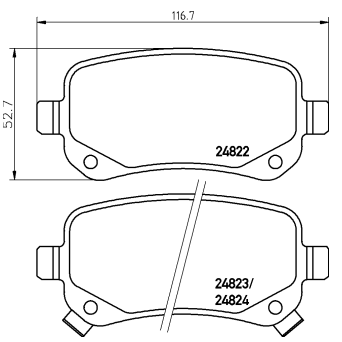

17

2482501

24825 150 0 5

NISSAN

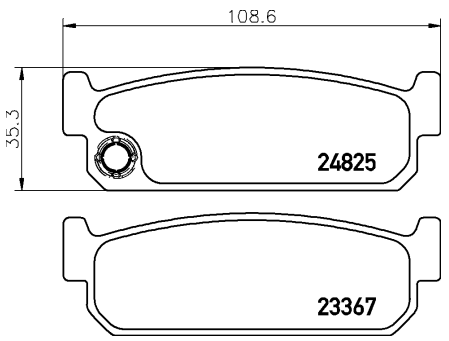

15

2482601

24826 180 0 5

RENAULT

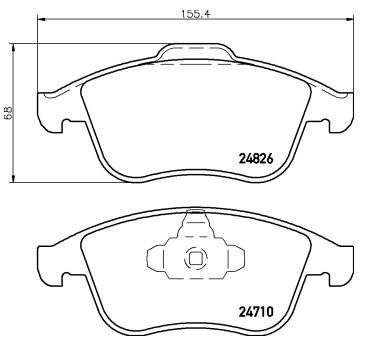

18

2482701

24827 141 0 5

MITSUBISHI

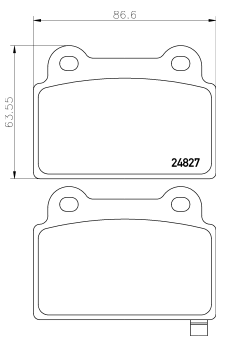

14.1

2482901

24829 147 0 4

FORD, FORD AUSTRALIA

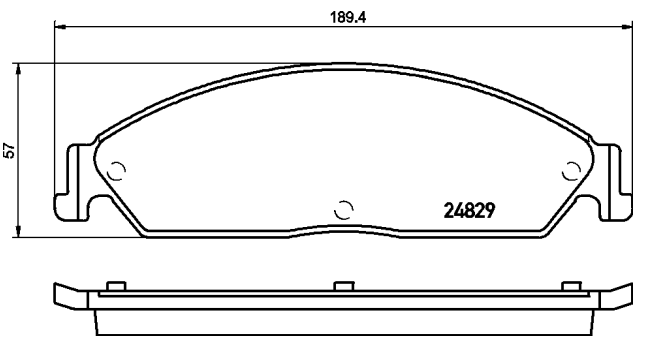

14.7

2483001

24830 155 0 5

SUZUKI

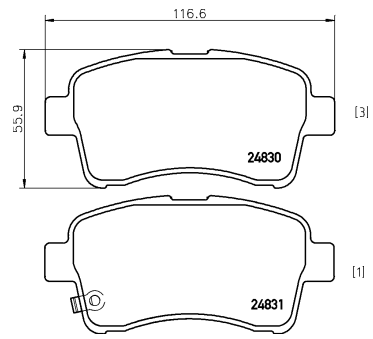

15.5

2483501

24835 155 1 4

TOYOTA

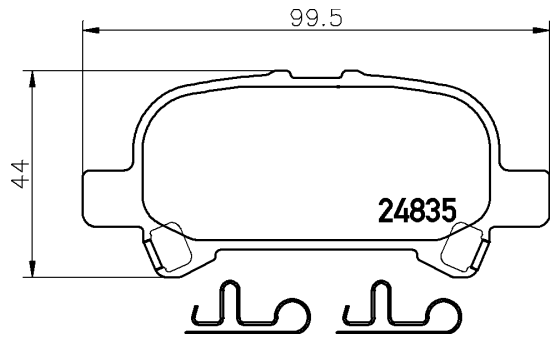

15.4

2483901

24839 194 1 5

CITROËN, FIAT, LANCIA, PEUGEOT

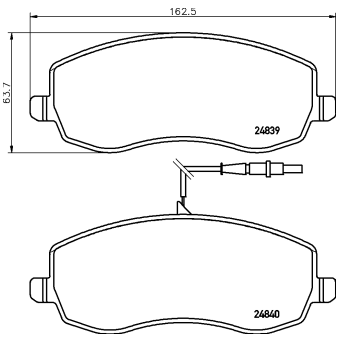

19.4

2484401

24844 179 0 5

TOYOTA

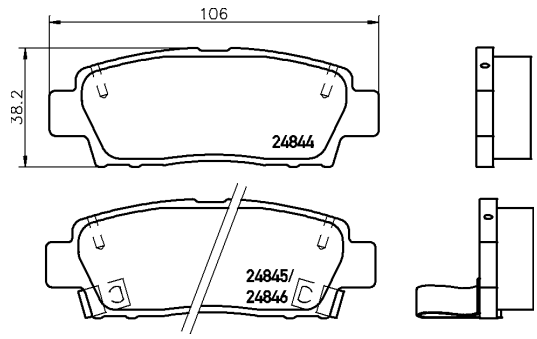

17.9

2484701

24847 170 0 4

AUDI

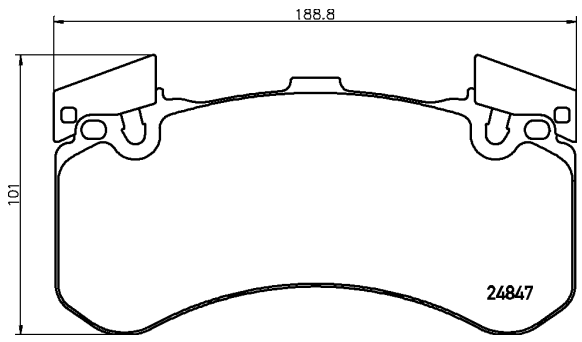

17

2484801

24848 184 1 4

MERCEDES-BENZ

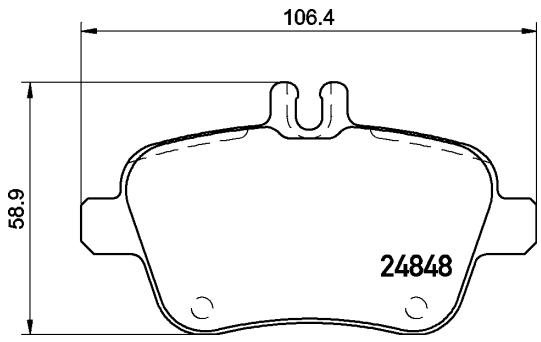

18.4

2485001

24850 166 0 4

JAGUAR

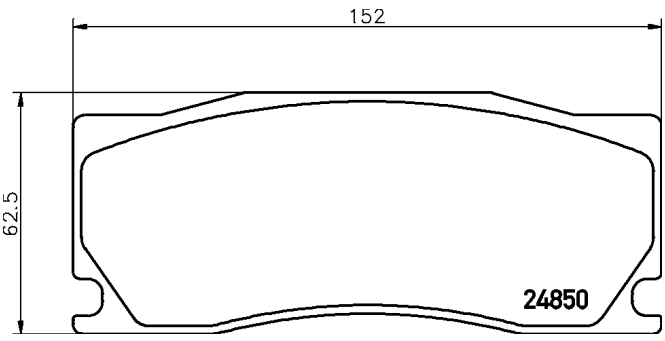

16.6

2485101

24851 156 0 4

JAGUAR

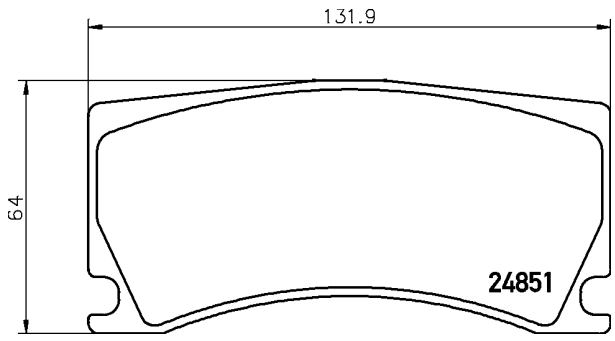

15.6

2485201

24852 158 0 5

ALFA ROMEO

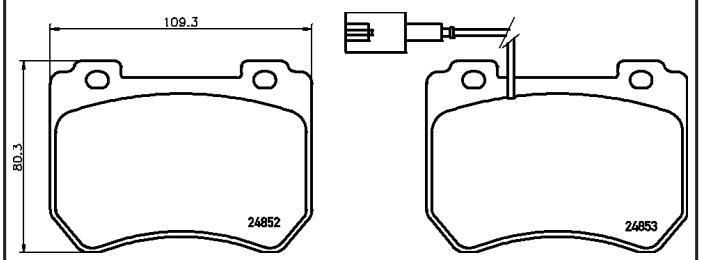

15.8

2485401

24854 160 1 5

SUBARU, TOYOTA

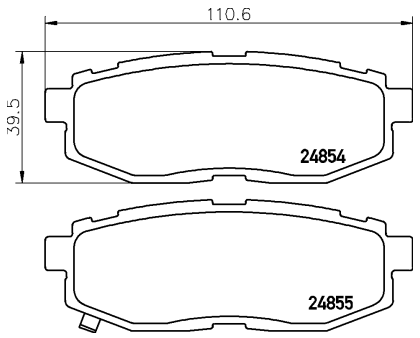

16

2485601

24856 180 0 5

PONTIAC

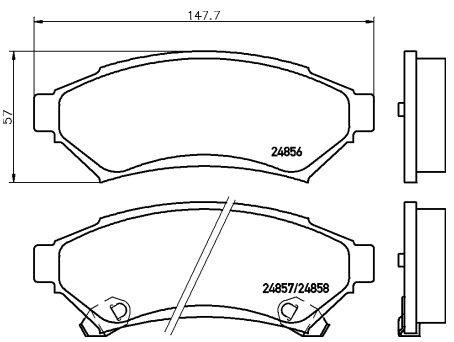

17.9

2485901

24859 139 0 5

BUICK, BUICK (SGM)

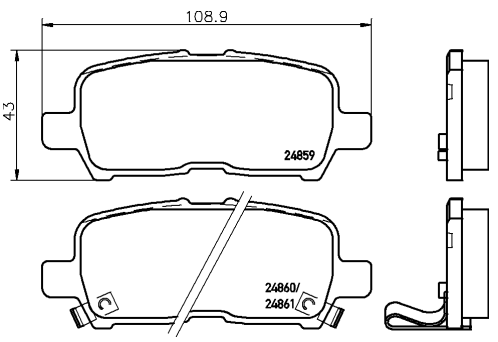

13.9

2486401

24864 170 0 5

CHEVROLET, HOLDEN

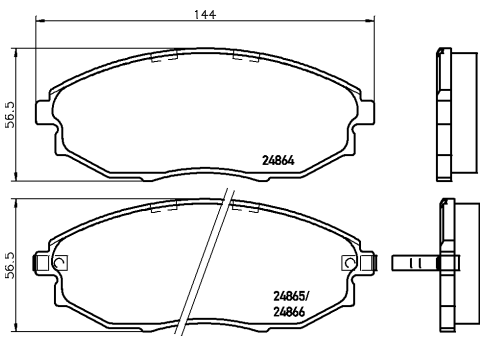

17

2486701

24867 202 1 5

MERCEDES-BENZ, MERCEDES-BENZ (BBDC)

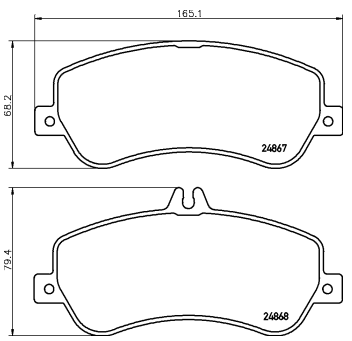

20.2

2486781

24867 202 1 5 epad

MERCEDES-BENZ, MERCEDES-BENZ (BBDC)

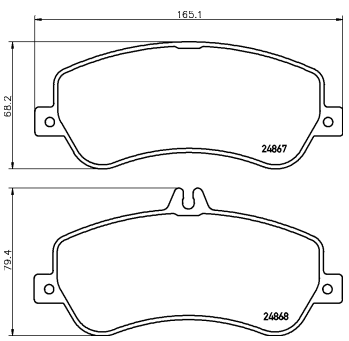

20.2

2486901

24869 190 1 4

MERCEDES-BENZ

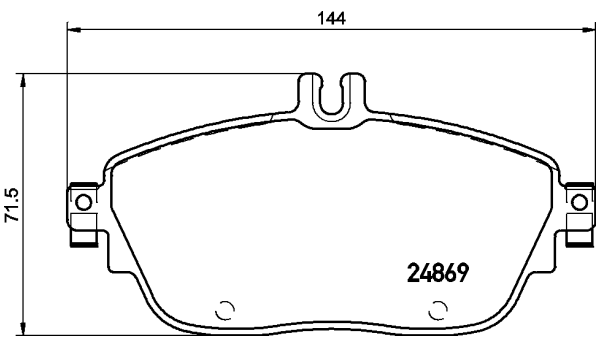

19

Illustrations

2487001

24870 180 0 5

RENAULT

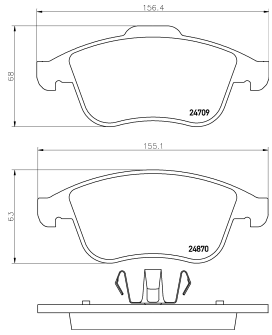

18

2487101

24871 138 0 5

INFINITI, NISSAN, SUZUKI

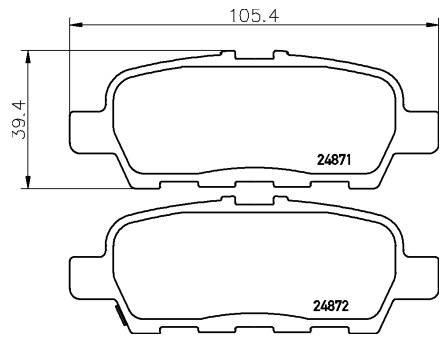

13.8

2488301

24883 180 1 4

CITROËN, PEUGEOT

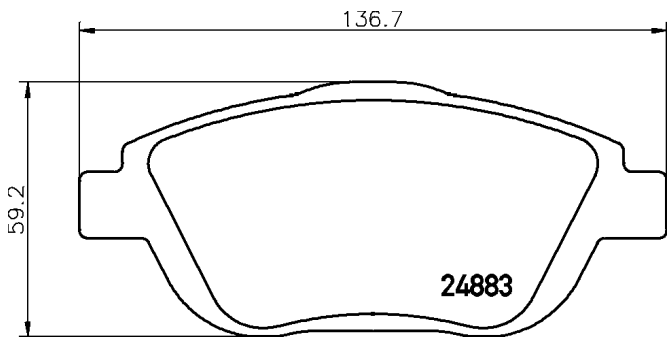

18

2488501

24885 165 1 5

TOYOTA

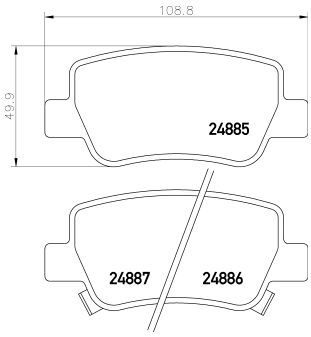

16.5

2488801

24888 167 0 5

AUDI

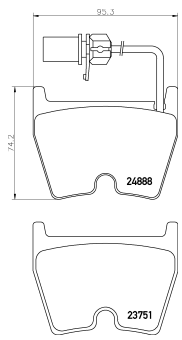

16.7

2489201

24892 180 0 5

LEXUS, TOYOTA

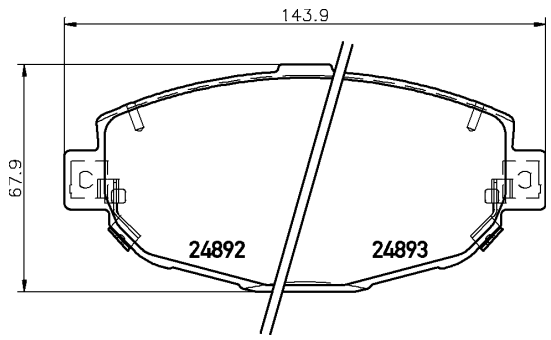

18

2490201

24902 155 0 5

TOYOTA, TOYOTA (FAW)

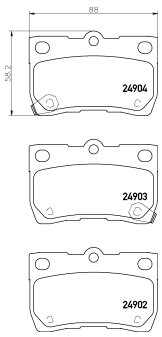

15.5

2491001

24910 168 0 5

HYUNDAI

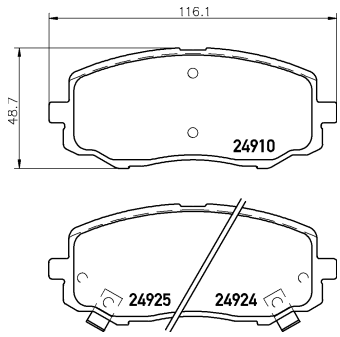

16.7

Illustrations

2491401

24914 180 0 5

DACIA, RENAULT

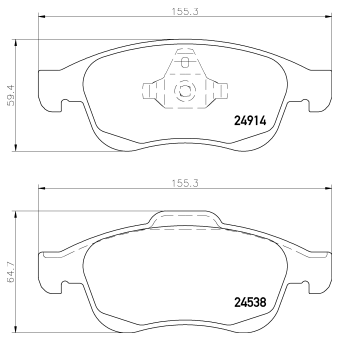

18

2491501

24915 173 1 5

HYUNDAI, KIA

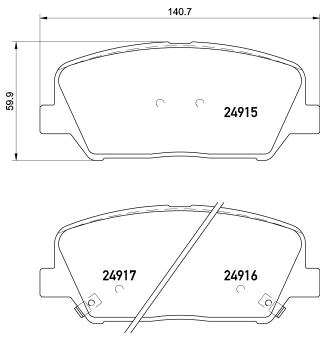

17.3

2491801

24918 150 0 4

LEXUS, TOYOTA

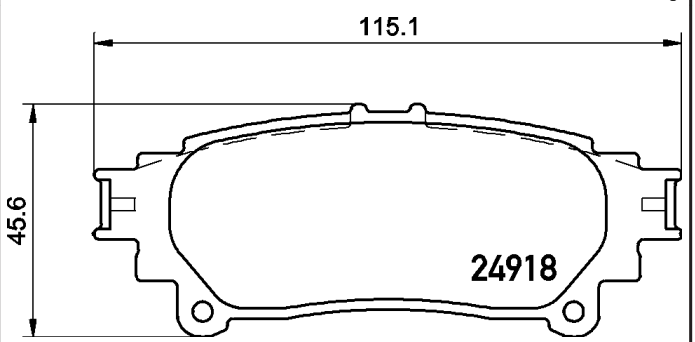

15

2492001

24920 156 0 5

INFINITI

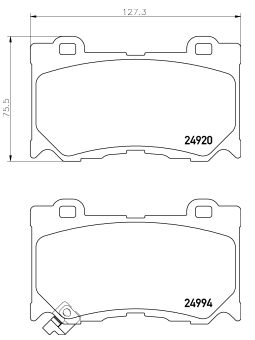

15.6

2492101

24921 135 0 5

INFINITI, NISSAN

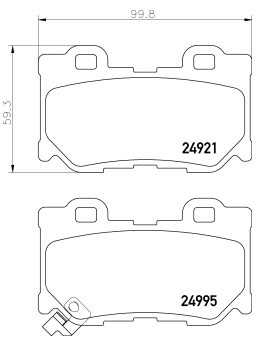

13.5

2492201

24922 173 1 4

CITROËN, PEUGEOT

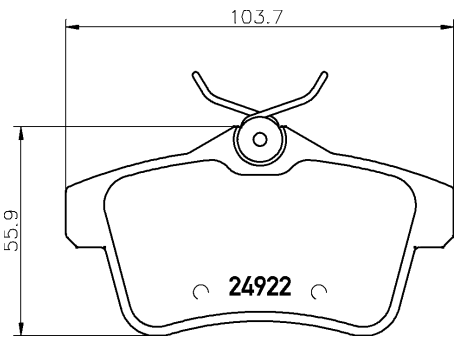

17.3

2492601

24926 166 1 5

TOYOTA

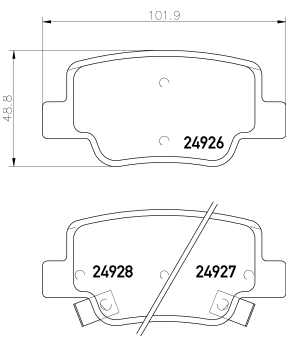

16.6

2493001

24930 164 0 5

INFINITI

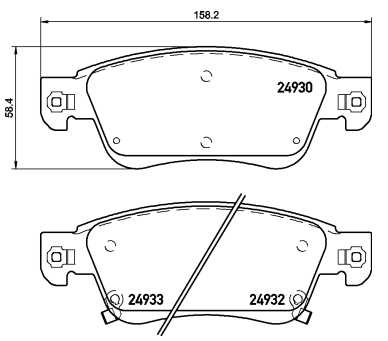

16.4

2493401

24934 155 1 5

HYUNDAI, KIA, KIA (DYK), SSANGYONG

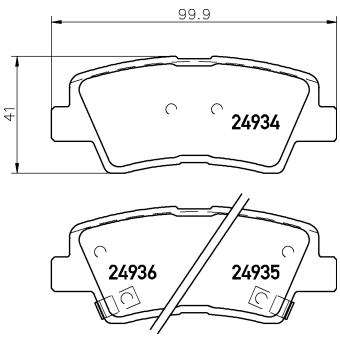

15.5

2493701

24937 161 1 5

CADILLAC

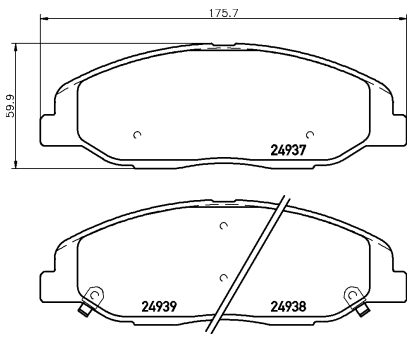

16

2494001

24940 172 1 5

CADILLAC

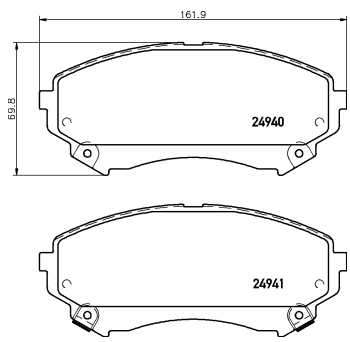

17.2

2494601

24946 191 1 5

TOYOTA

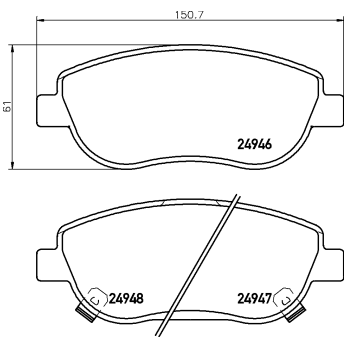

19.1

2494901

24949 165 0 5

HYUNDAI

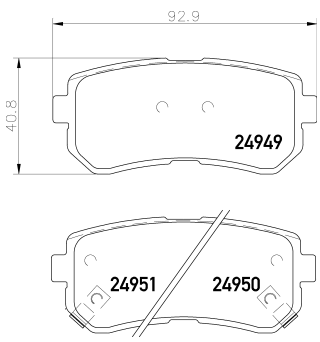

16.5

2495301

24953 186 0 5

CHRYSLER, DODGE, PLYMOUTH

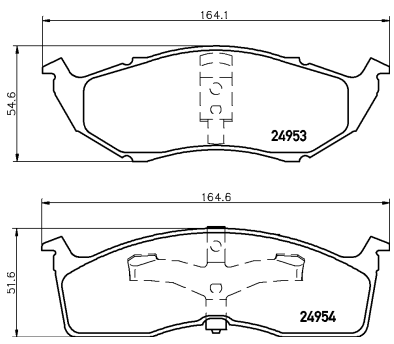

16.5

2496501

24965 175 0 5

LEXUS

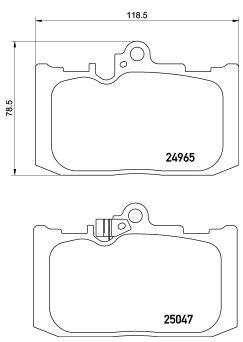

17.5

2497101

24971 184 1 4

RENAULT

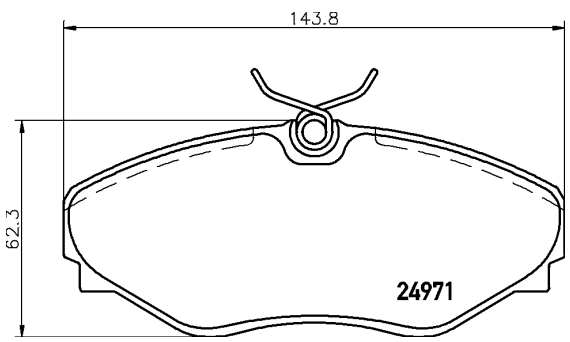

18.4

2497401

24974 167 0 4

SEAT

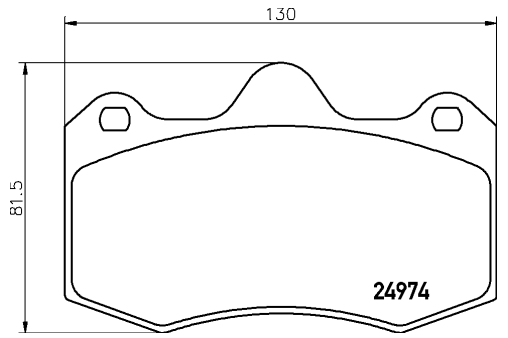

16.7

2497601

24976 175 0 4

MERCEDES-BENZ

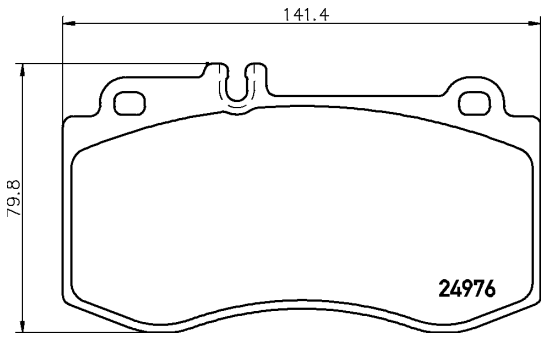

17.5

2497901

24979 165 0 5

HONDA, HONDA (GAC)

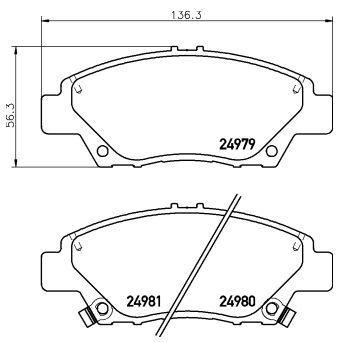

16.5

2499401

24994 159 0 5

INFINITI, NISSAN

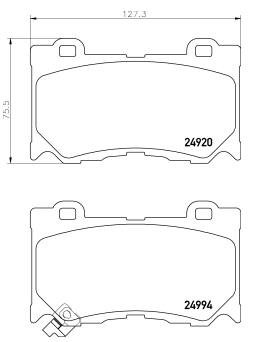

15.9

2499501

24995 138 0 5

INFINITI, NISSAN

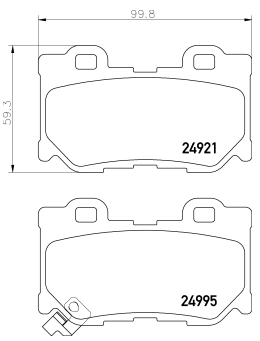

13.8

2499601

24996 170 1 5

HONDA, ROVER

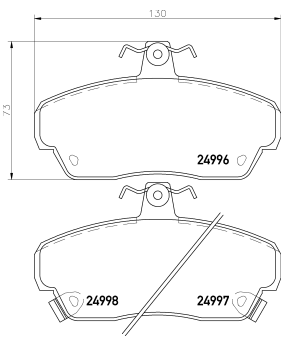

17.4

2500301

25003 173 0 4

PORSCHE

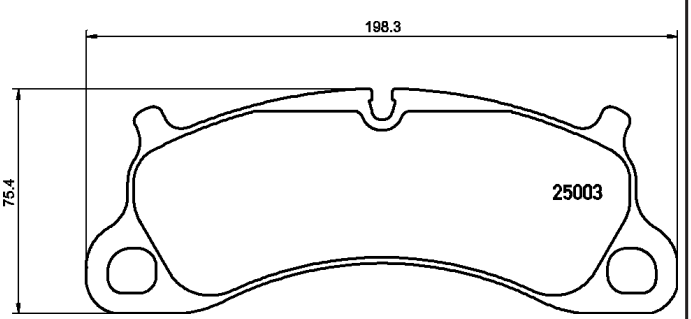

17.3

2500601

25006 193 1 5

TOYOTA

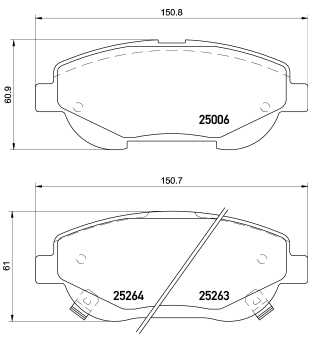

19.3

2500701

25007 171 0 4

PORSCHE, VOLKSWAGEN

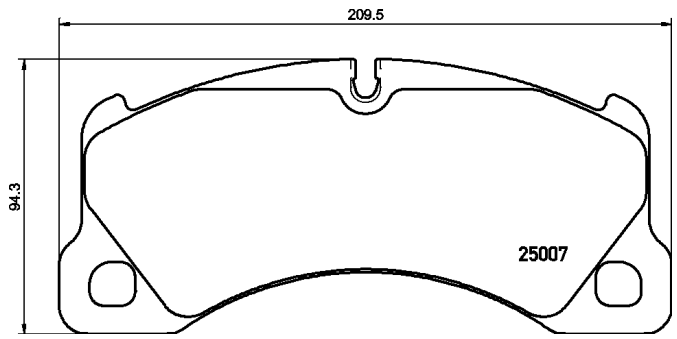

17.1

2500801

25008 164 0 5

AUDI, VOLKSWAGEN

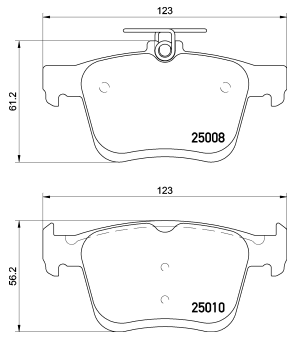

16.4

2500901

25009 164 0 5

AUDI, VOLKSWAGEN

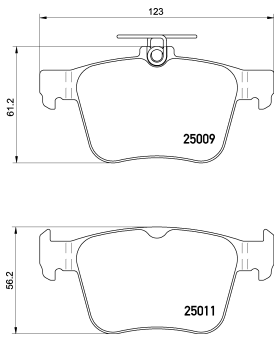

16.4

2501401

25014 183 0 5

BMW

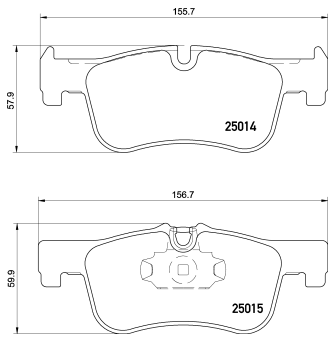

2501601

25016 143 0 5

LEXUS, TOYOTA

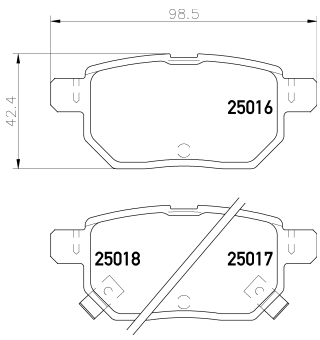

14.3

2501901

25019 175 1 5

HYUNDAI

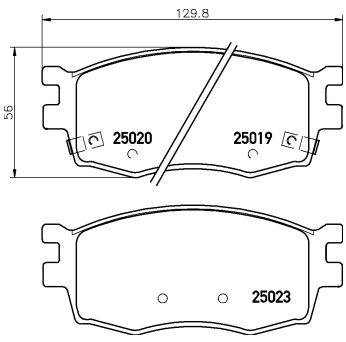

17.5

2502101

25021 186 1 5

LAND ROVER

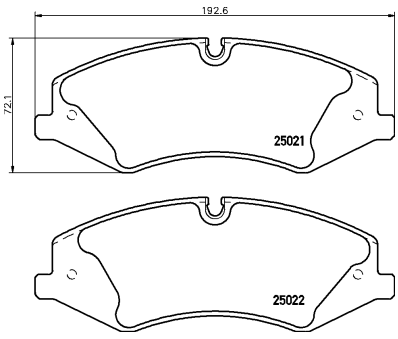

18.6

2502201

25022 186 1 5

LAND ROVER

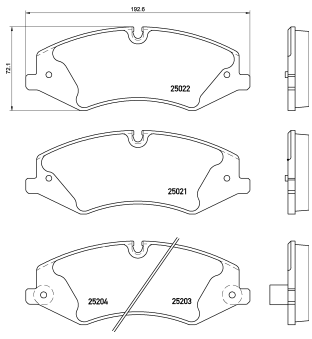

18.6

2502902

25029 170 1 4

BMW, BMW (BRILLIANCE)

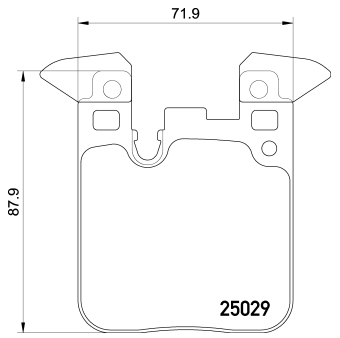

17

2503101

25031 188 1 5

BUICK (SGM), CHEVROLET, CHEVROLET (SGM), HOLDEN, OPEL, VAUXHALL

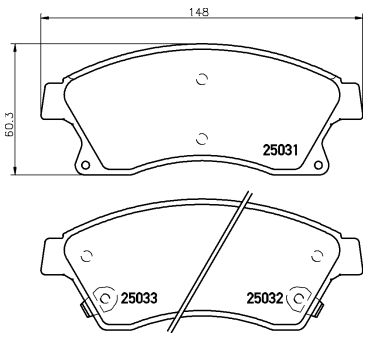

18.8

2503181

25031 188 1 5

BUICK (SGM), CHEVROLET, CHEVROLET (SGM), HOLDEN, OPEL, VAUXHALL

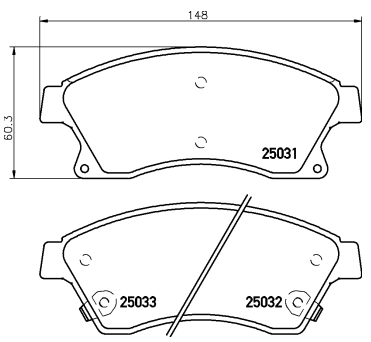

18.8

2503401

25034 188 1 5

CADILLAC, CHEVROLET, HOLDEN, OPEL, VAUXHALL

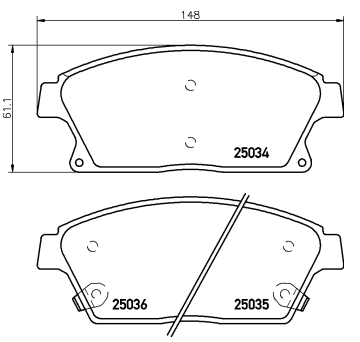

18.8

2503481

25034 188 1 5 epad

CADILLAC, CHEVROLET, HOLDEN, OPEL, VAUXHALL

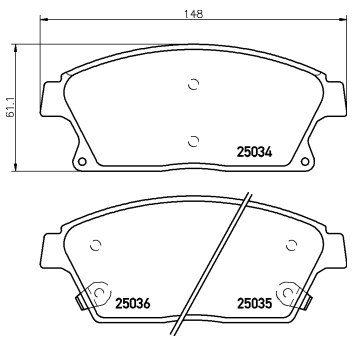

18.8

2504501

25045 193 0 5

ALPINA, BMW

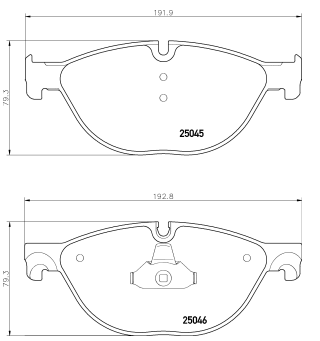

19.3

2504581

25045 193 0 5 epad

ALPINA, BMW

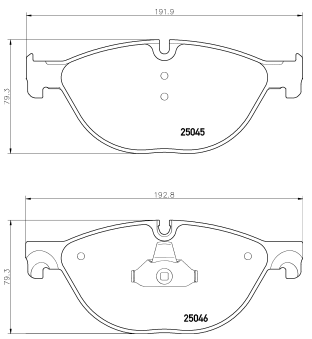

19.3

2505401

25054 146 0 5

HONDA

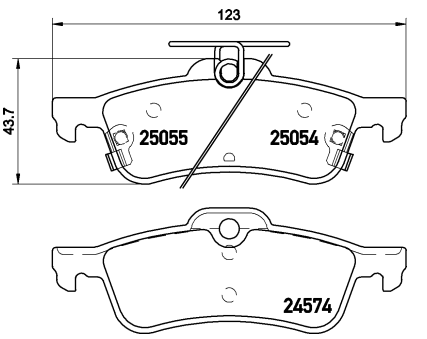

14.6

Illustrations

2506801

25068 164 0 4

FORD AUSTRALIA, FORD USA

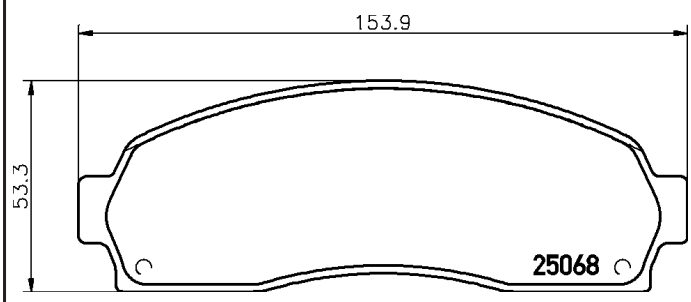

16.4

2506901

25069 170 1 5

CITROËN, PEUGEOT

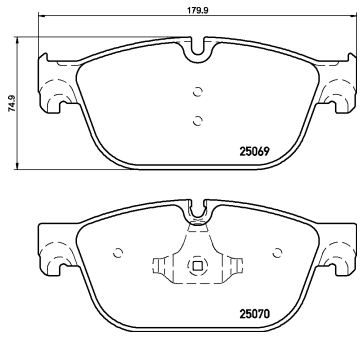

17

2507001

25070 170 0 5

CITROËN, PEUGEOT

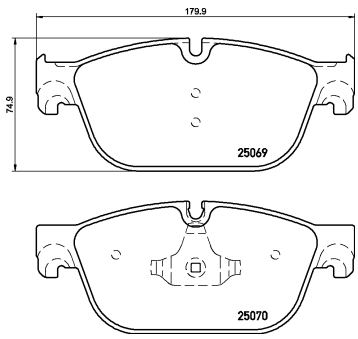

17

2507101

25071 188 1 5

MERCEDES-BENZ

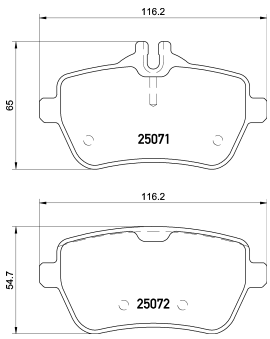

18.8

2508501

25085 171 1 4

LAND ROVER

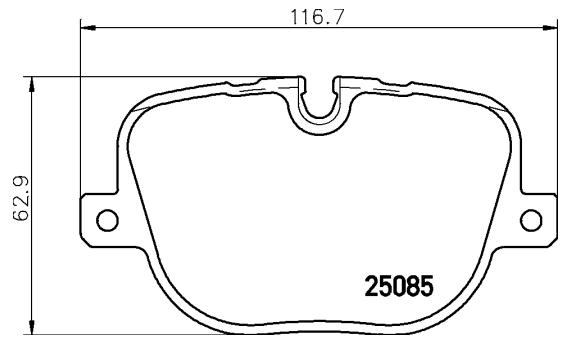

17.1

2508701

25087 168 0 5

NISSAN

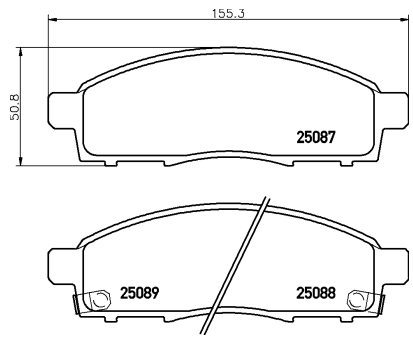

16.8

2509401

25094 190 1 4

CITROËN, PEUGEOT

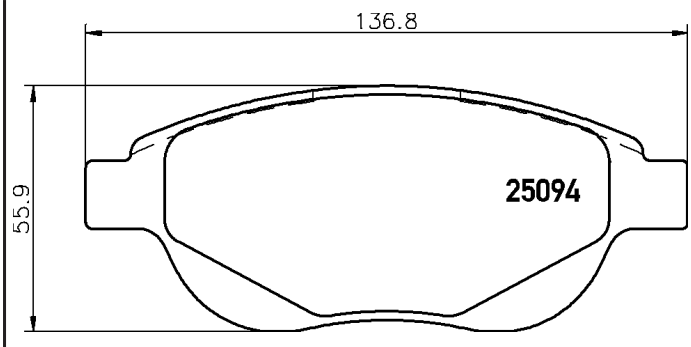

19

2509501

25095 170 1 5

OPEL, VAUXHALL

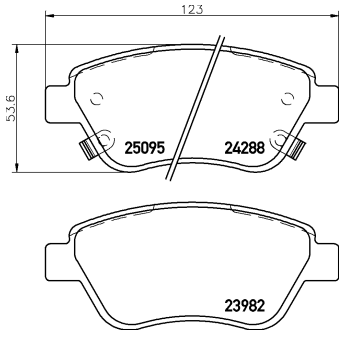

17

2509601

25096 162 1 5

BUICK (SGM), CHEVROLET, CHEVROLET (SGM), HOLDEN, OPEL, VAUXHALL

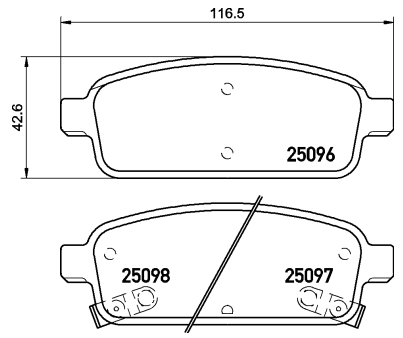

16.2

2509602

25096 162 9 5

CHEVROLET, HOLDEN, OPEL, VAUXHALL

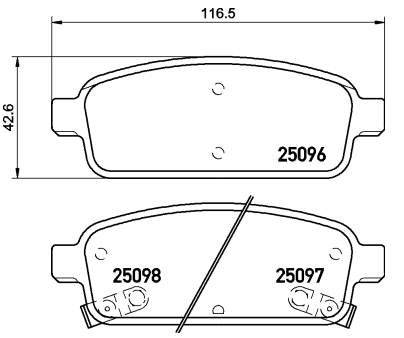

16.2

2509681

25096 162 1 5 epad

BUICK (SGM), CHEVROLET, CHEVROLET (SGM), HOLDEN, OPEL, VAUXHALL

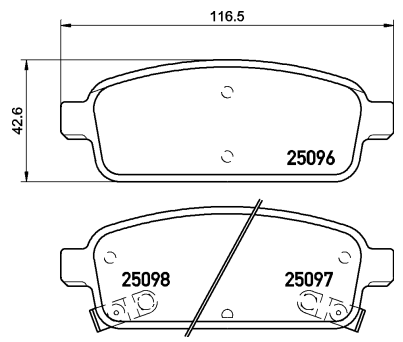

16.2

2510601

25106 15,9 0 5

CHEVROLET

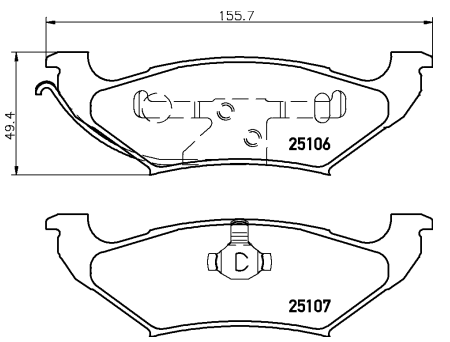

15.9

2510801

25109 159 0 5

CHRYSLER, DODGE, PLYMOUTH

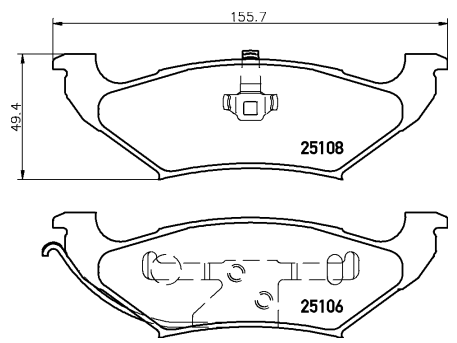

15.9

2511001

25110 175 1 4

SEAT, SKODA

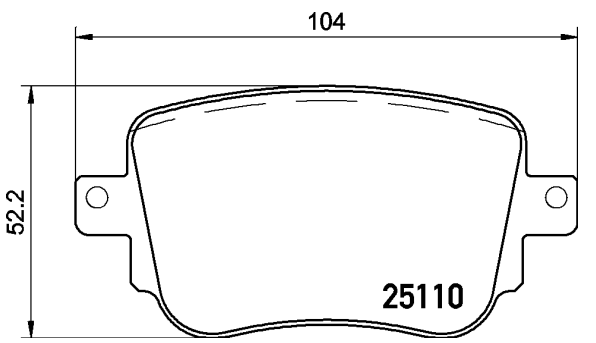

17.5

2511201

25112 181 0 5

NISSAN, OPEL, RENAULT, VAUXHALL

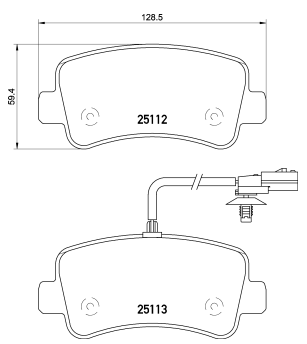

18.1

2511401

25114 162 0 5

JAGUAR

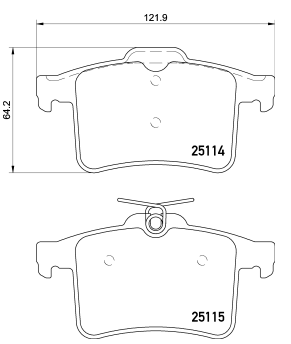

16.2

2511701

25117 160 1 5

HONDA

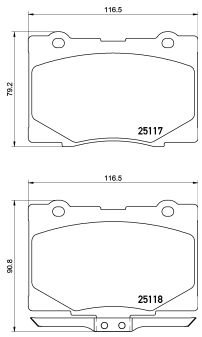

16

2513301

25133 204 0 4

BMW

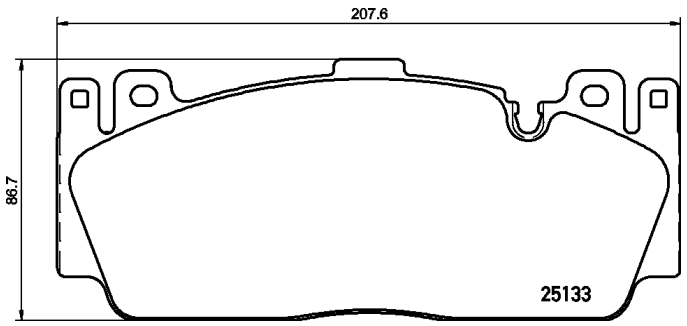

20.4

2513402

25134 167 1 5

FORD

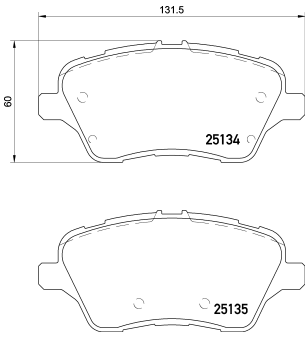

16.7

2513601

25136 170 0 5

DODGE

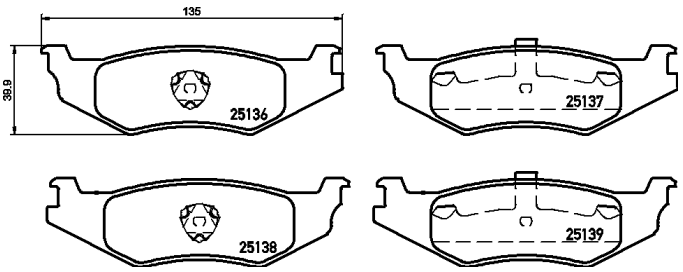

17

2514701

25147 180 0 5

NISSAN, OPEL, RENAULT, VAUXHALL

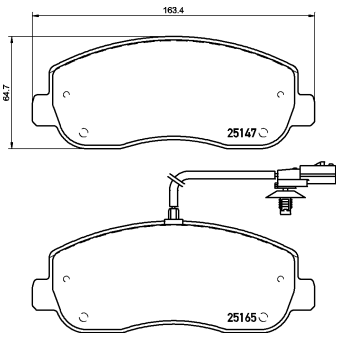

18

2514901

25149 158 1 5

HOLDEN, ISUZU

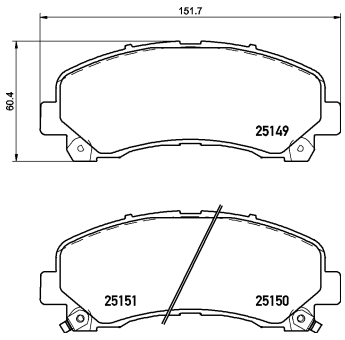

15.8

2515601

25156 178 1 5

ALFA ROMEO, DODGE

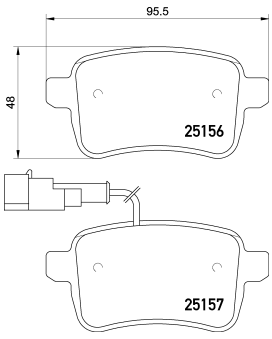

17.8

2515802

25158 200 0 5

AUDI

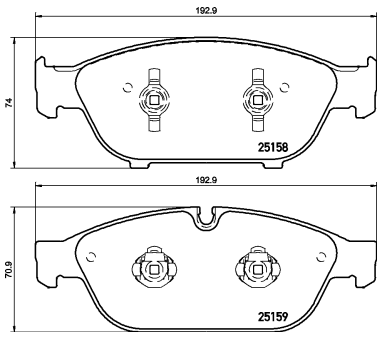

20

Illustrations

2515803

25158 190 0 5

MERCEDES-BENZ

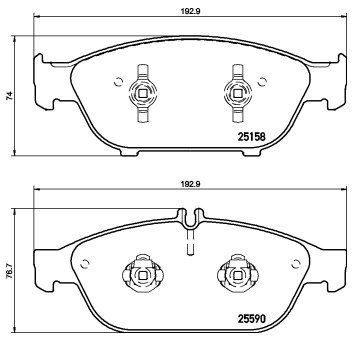

19

2516002

25160 200 0 5

AUDI

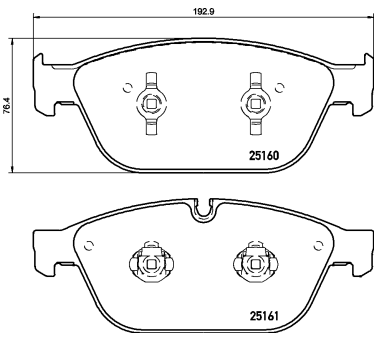

20

2516601

25166 159 1 5

HONDA

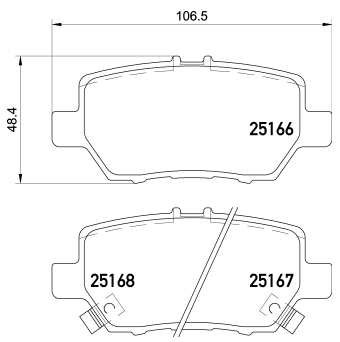

15.9

2517201

25172 180 0 5

NISSAN, OPEL, RENAULT, VAUXHALL

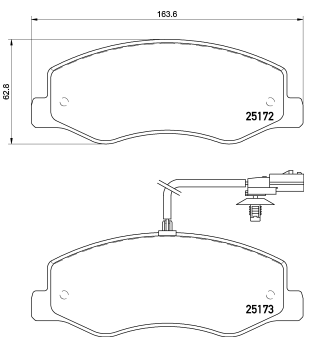

18

2517901

25179 178 0 4

MERCEDES-BENZ

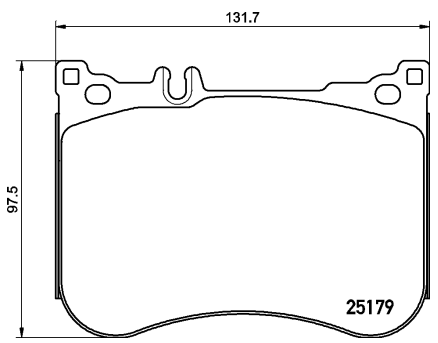

17.8

2517903

25179 175 0 4

MERCEDES-BENZ

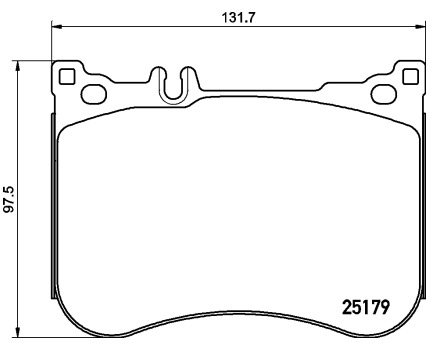

17.5

2518001

25180 185 0 5

ALFA ROMEO

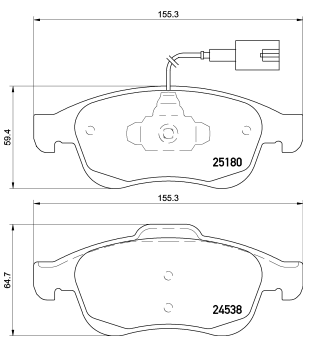

18.5

2518301

25183 178 0 5

MERCEDES-BENZ

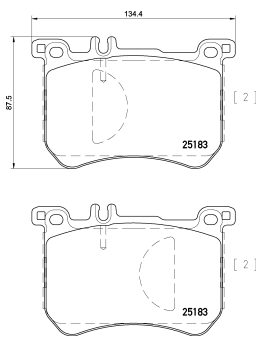

17.8

Illustrations

2518401

25184 194 1 5

KIA

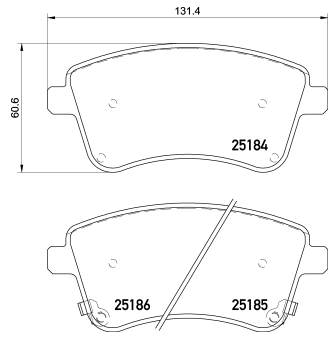

19.4

2518701

25187 177 1 5

HYUNDAI

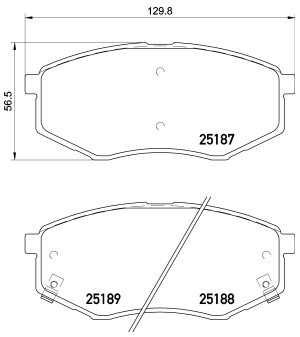

17.7

2519001

25190 213 0 5

JEEP

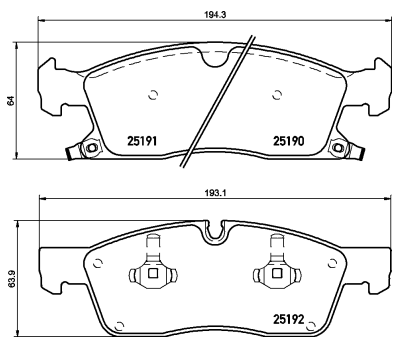

21.3

2519002

25190 190 0 5

JEEP

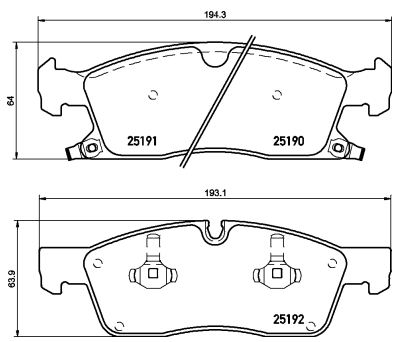

19

2519201

25192 190 0 5

MERCEDES-BENZ

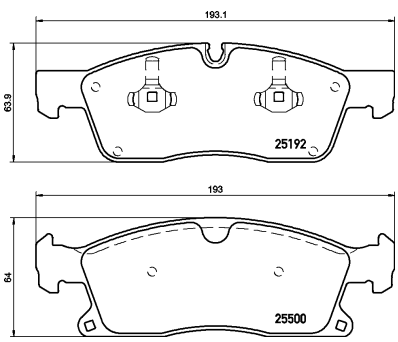

19

2519202

25192 213 0 5

MERCEDES-BENZ

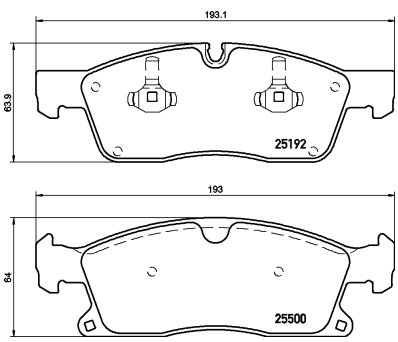

21.3

2519601

25196 180 0 5

JEEP

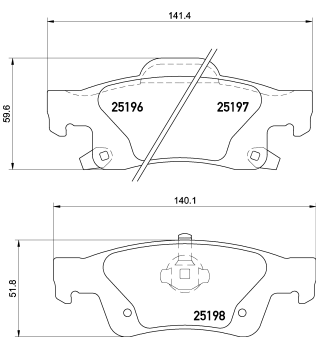

18

2519901

25199 192 0 5

BMW, BMW (BRILLIANCE)

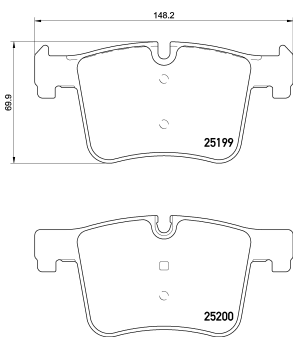

19.2

2520201

25202 168 1 4

NISSAN, SUZUKI

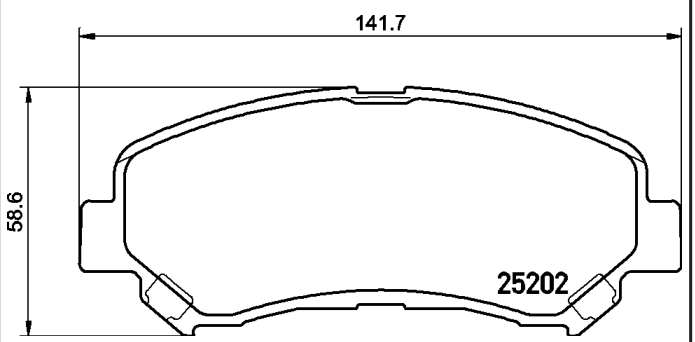

16.8

2520501

25205 175 1 5

HYUNDAI, HYUNDAI (BEIJING), KIA

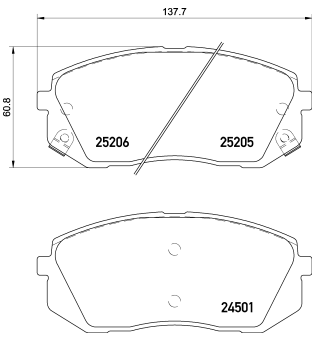

17.5

2520901

25209 168 0 5

TOYOTA

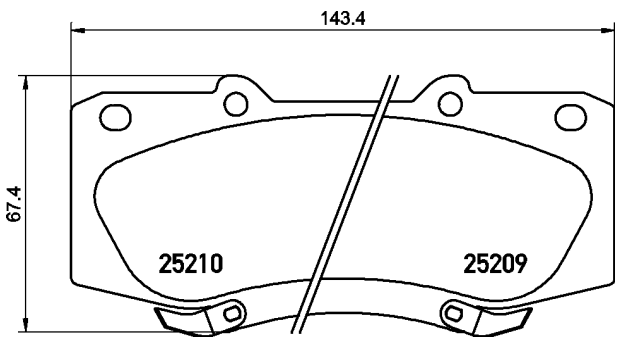

16.8

2521201

25212 161 0 5

FORD, FORD (CHANGAN), FORD AUSTRALIA, MAZDA (CHANGAN), VOLVO, VOLVO (CHANGAN)

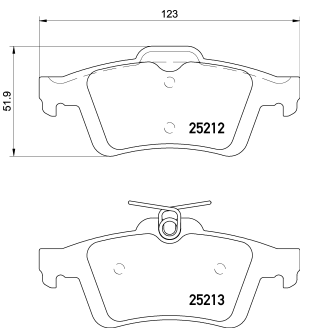

16.1

2521281

25212 161 0 5 epad

FORD, FORD (CHANGAN), FORD AUSTRALIA, MAZDA (CHANGAN), VOLVO, VOLVO (CHANGAN)

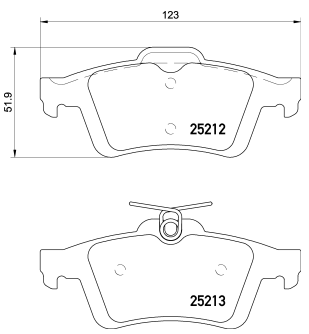

16.1

2521401

25217 175 7 5

AUDI

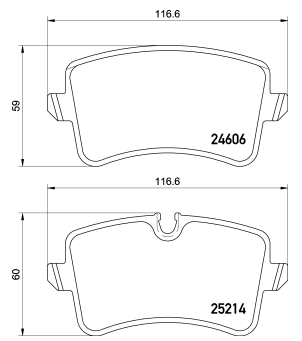

17.5

2521402

25214 175 1 5

AUDI

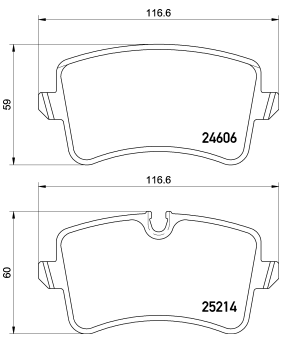

17.5

2521403

25214 175 3 5

AUDI, PORSCHE

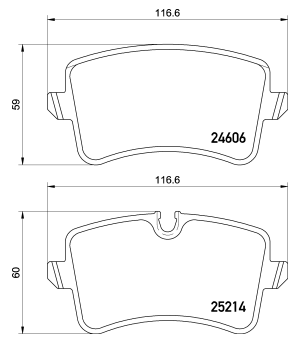

17.5

2521404

25214 175 4 5

AUDI

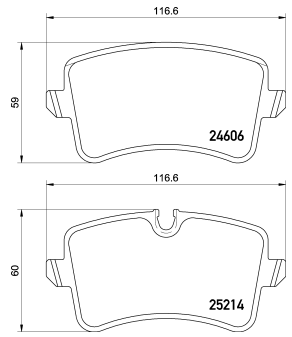

17.5

2521501

25215 187 1 5

MERCEDES-BENZ

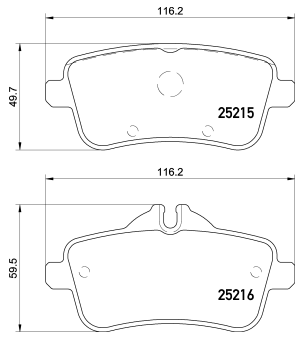

18.7

2521502

25215 187 2 5

MERCEDES-BENZ

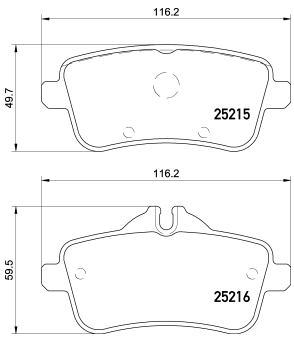

18.7

2521505

25215 165 1 5

MERCEDES-BENZ

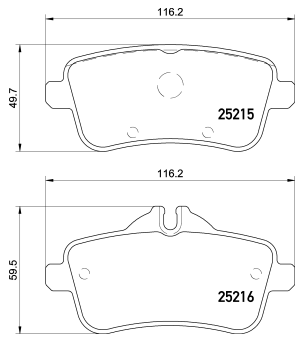

16.5

2521801

25218 163 0 5

PEUGEOT

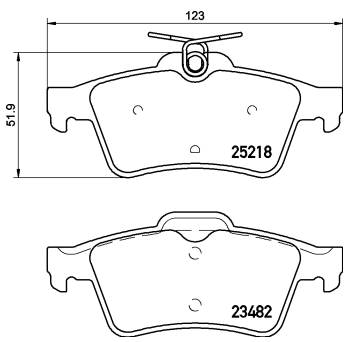

16.3

2521901

25219 178 0 4

MERCEDES-BENZ

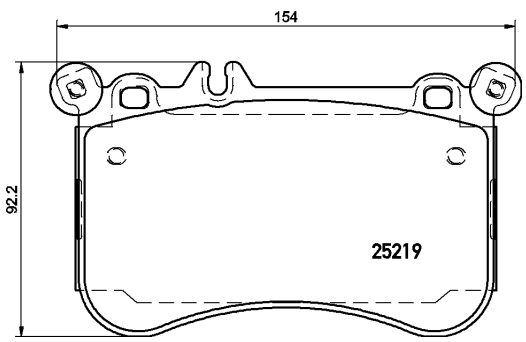

17.8

2521902

25219 178 9 4

MERCEDES-BENZ

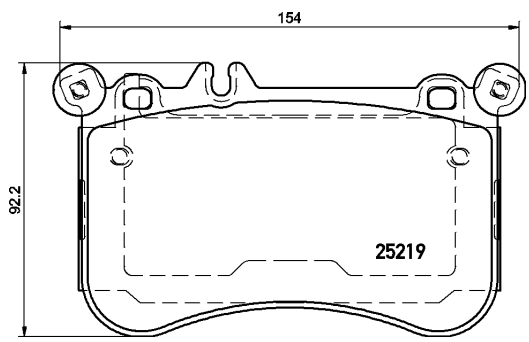

17.8

2522001

25220 185 1 5

CITROËN

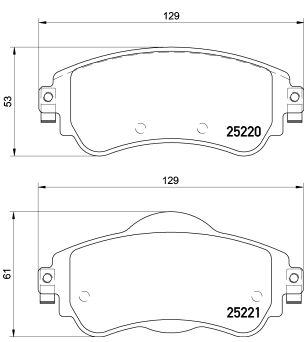

18.5

2522201

25222 170 1 5

PEUGEOT

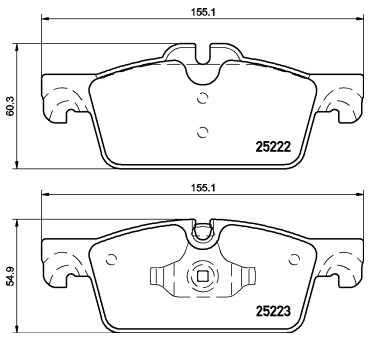

17

2523201

25232 144 0 4

CHEVROLET

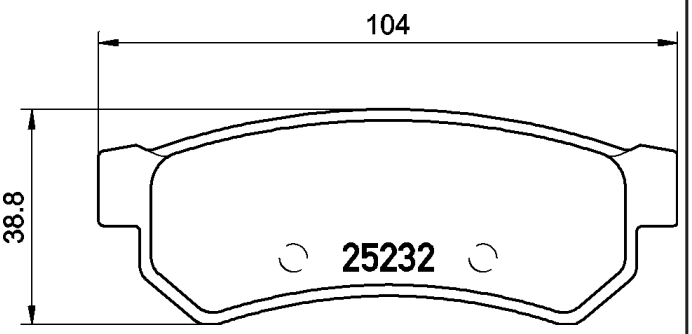

14.4

2524001

25240 178 1 5

NISSAN

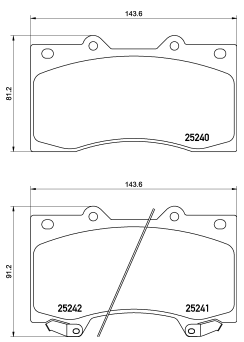

17.8

2524301

25243 152 0 5

HONDA

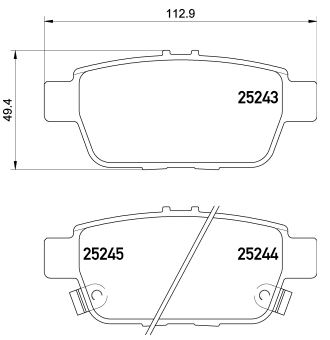

15.2

2524601

25246 156 0 4

TOYOTA

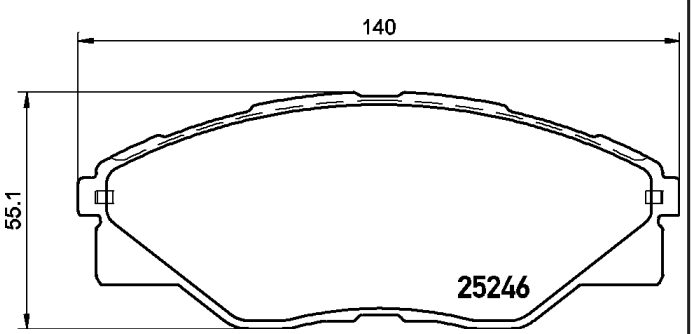

15.6

2525001

25250 187 1 5

CITROËN, PEUGEOT

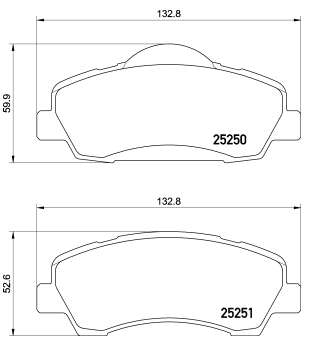

18.7

2525801

25258 143 1 5

SUZUKI

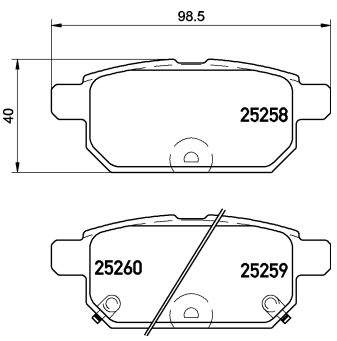

14.3

2526201

25262 154 1 5

DAIHATSU, PERODUA, SUBARU, TOYOTA

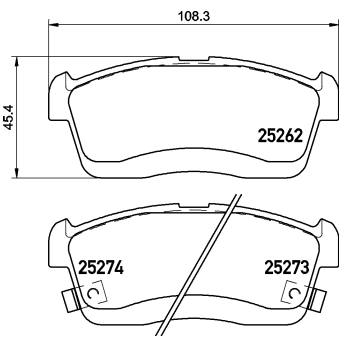

15.4

2526501

25265 162 0 5

RENAULT

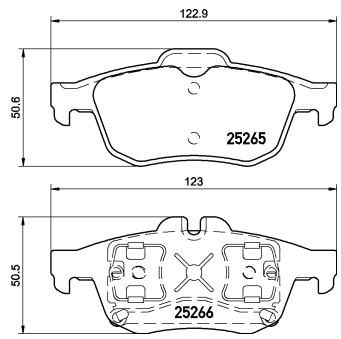

16.2

2526801

25268 179 0 5

CHEVROLET, HOLDEN

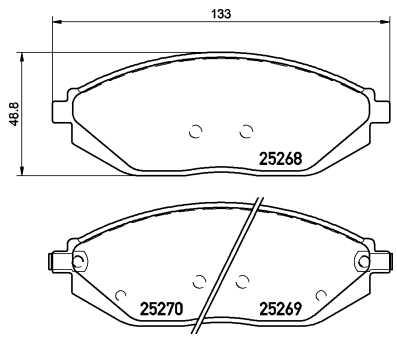

17.9

2527101

25271 153 1 5

MITSUBISHI

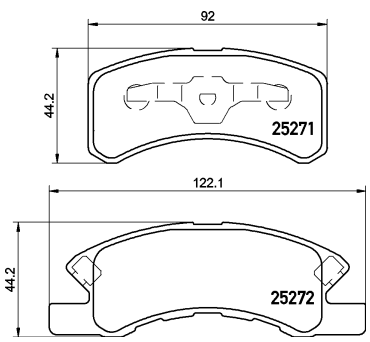

15.3

2527701

25277 145 0 5

MITSUBISHI

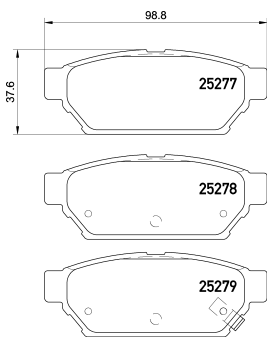

14.5

2529201

25292 159 1 5

HYUNDAI, HYUNDAI (BEIJING), KIA

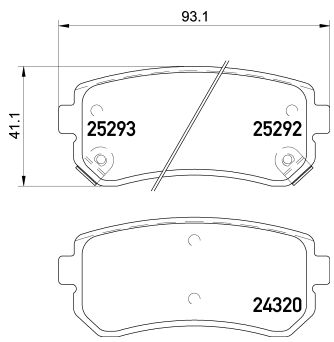

15.9

2529701

25297 178 1 5

HONDA

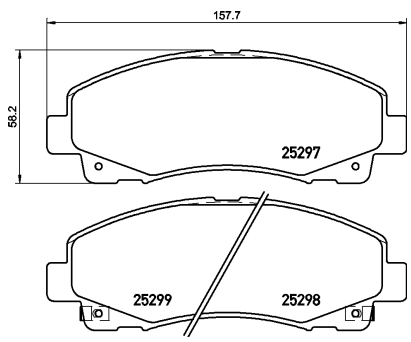

17.8

2530401

25304 140 0 5

CHEVROLET, PONTIAC

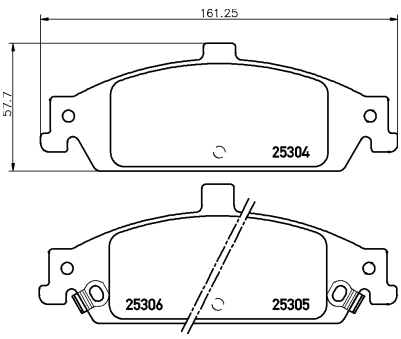

14.2

2530701

25307 172 0 5

BMW, BMW (BRILLIANCE)

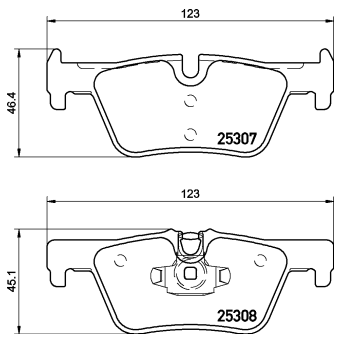

17.2

2531601

25316 165 0 5

TOYOTA

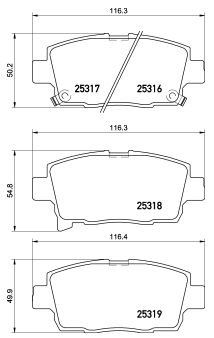

16.5

2532301

25323 173 0 5

CHRYSLER, FIAT, LANCIA

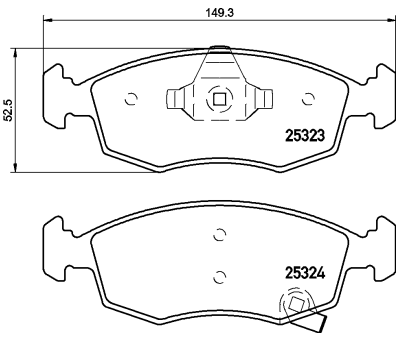

17.3

2532601

25326 192 1 4

MERCEDES-BENZ

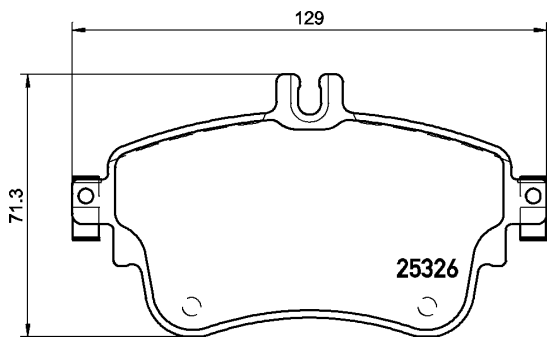

19.2

2533701

25337 157 1 5

DODGE, HYUNDAI, KIA

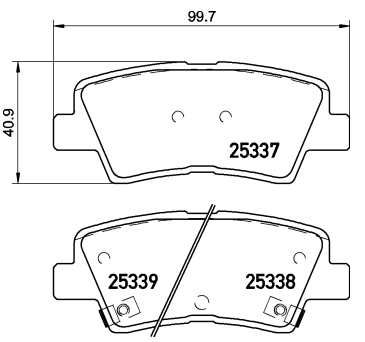

15.7

2534001

25340 150 0 5

INFINITI, NISSAN

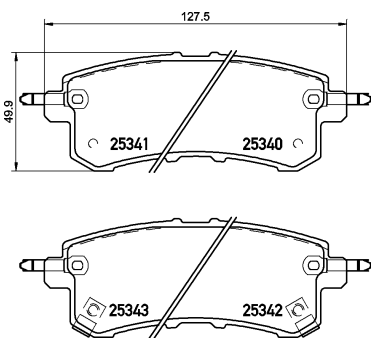

15

2534701

25347 137 1 5

FIAT

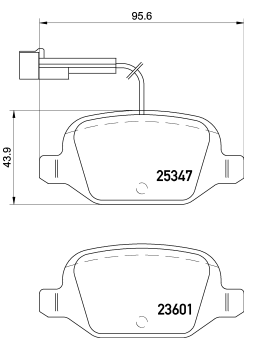

13.7

2534801

25348 178 1 5

DODGE, HYUNDAI, KIA

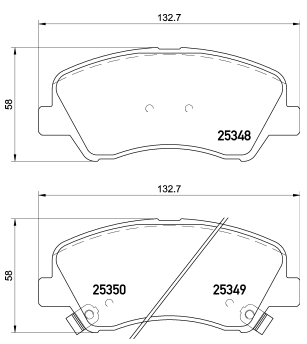

17.8

2535701

25357 173 1 5

FIAT

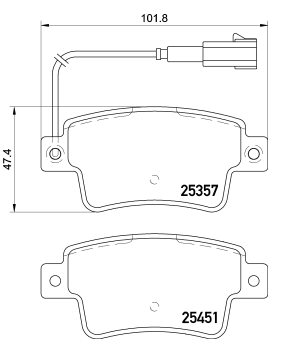

17.3

2536501

25365 166 1 5

DODGE, KIA

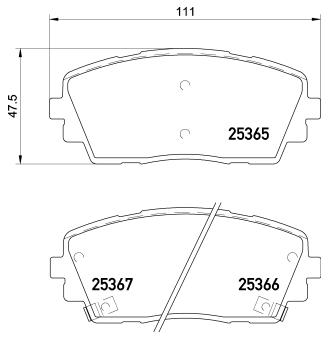

16.6

2537401

25374 184 0 5

KIA

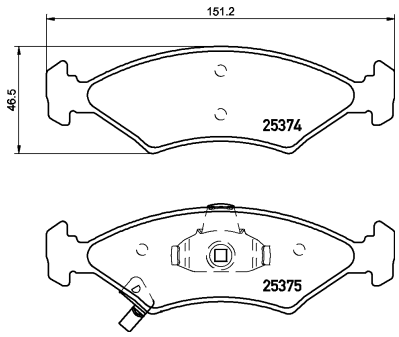

18.3

2537601

25376 176 1 5

CHRYSLER, DODGE, FIAT, LANCIA, VOLKSWAGEN

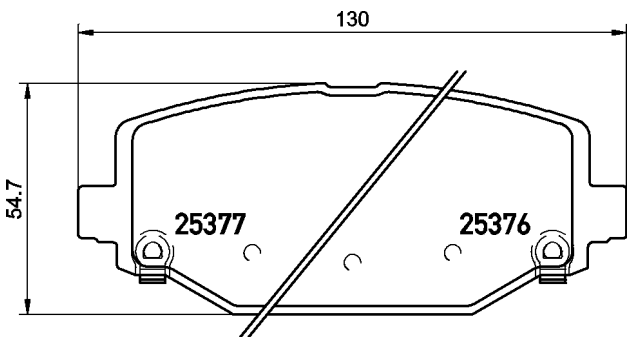

17.6

2537801

25378 181 1 5

CHRYSLER, DODGE, FIAT, LANCIA, VOLKSWAGEN

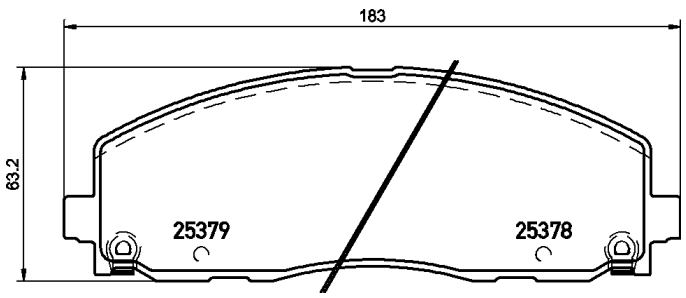

18.1

2541001

25410 144 1 5

FIAT

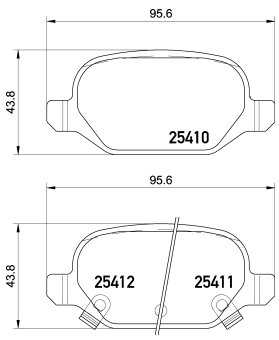

14.4

2542901

25429 167 0 5

FIAT

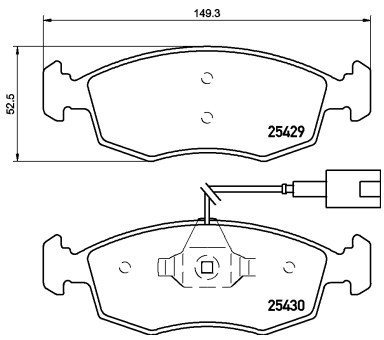

16.7

2543401

25434 152 1 4

HONDA

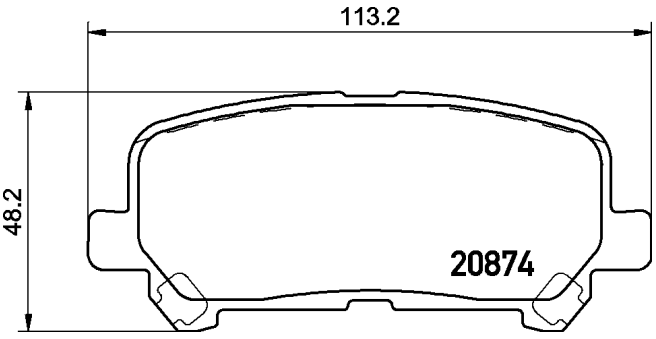

15.2

2547801

25478 168 0 5

MINI

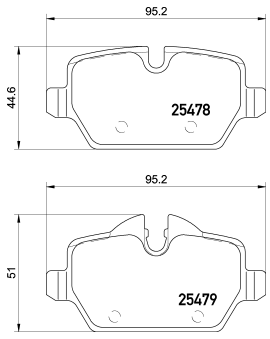

16.8

Illustrations

2548101

25481 152 0 4

TOYOTA, TOYOTA (GAC)

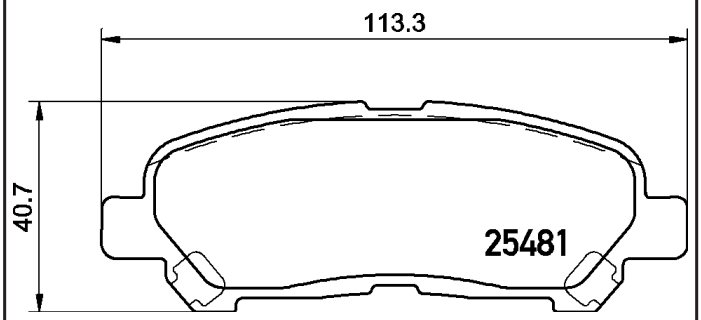

15.2

2550601

25506 182 0 5

BMW, BMW (BRILLIANCE)

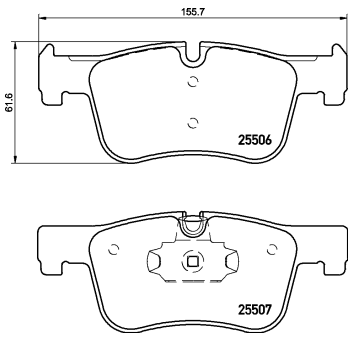

18.2

2551301

25513 179 1 4

HYUNDAI

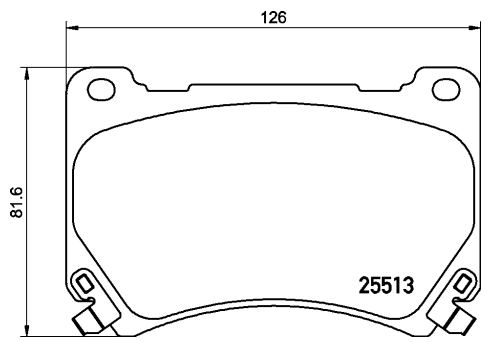

17.9

2551401

25514 183 0 5

BMW, BMW (BRILLIANCE)

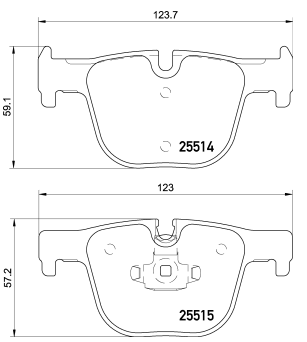

18.3

2552001

25520 155 1 5

HYUNDAI, KIA

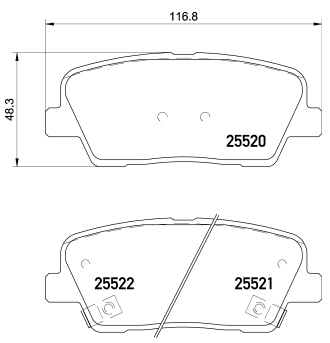

15.5

2552501

25525 168 0 4

LEXUS

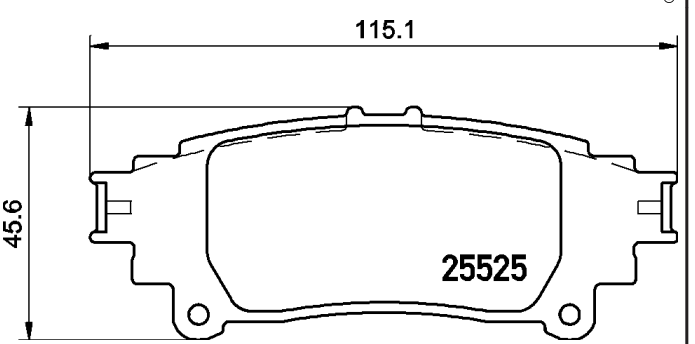

16.8

2553101

25531 192 0 5

MERCEDES-BENZ

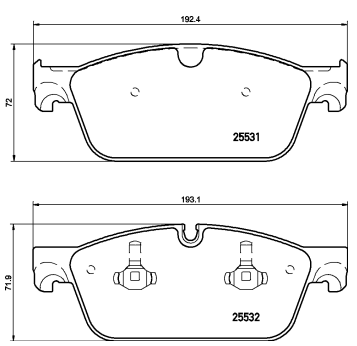

19.2

2553103

25531 172 0 5

MERCEDES-BENZ

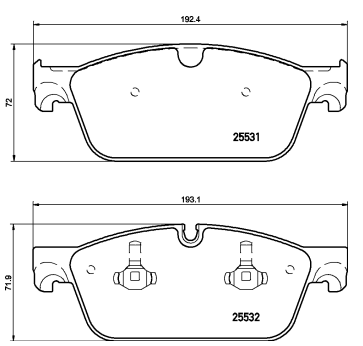

17.2

2554001

25540 144 0 5

MAZDA

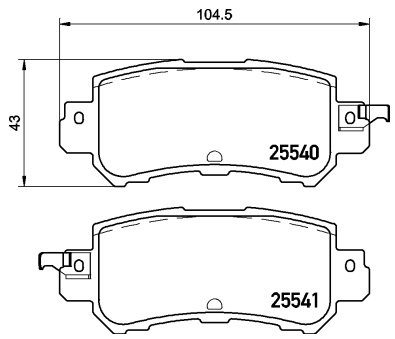

14.4

2556401

25564 158 1 4

MAZDA

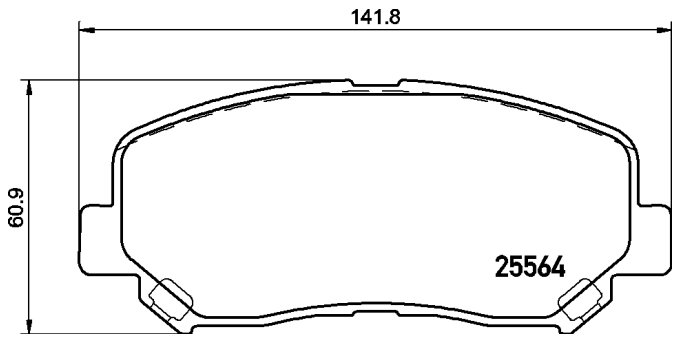

15.8

2559401

25594 159 0 4

LOTUS

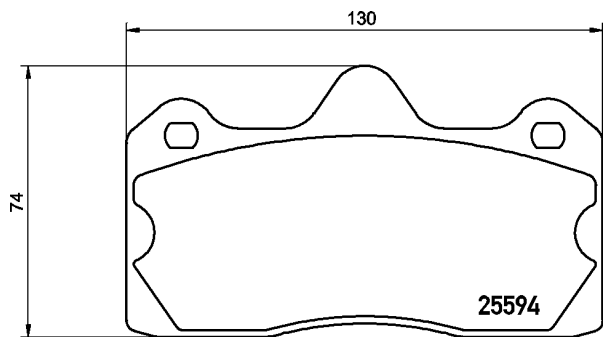

15.9

2559901

25599 160 1 5

TOYOTA

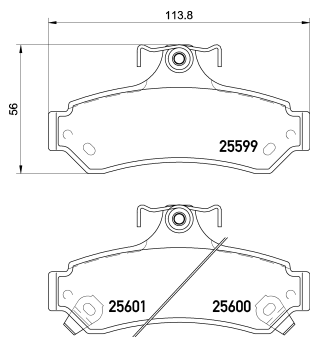

16

2560201

25602 170 1 4

FORD

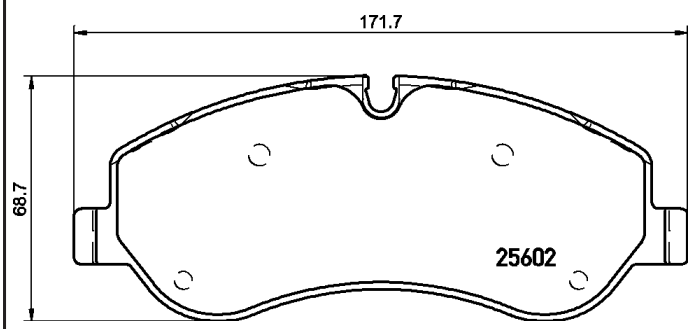

17

2560301

25603 178 1 5

FORD

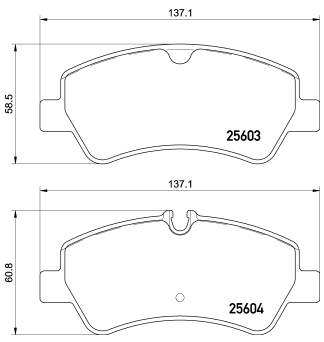

17.8

2560501

25605 181 1 5

LANCIA

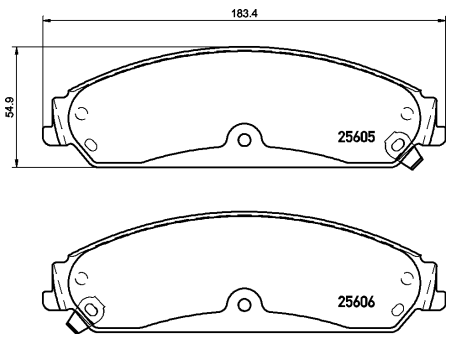

18.1

2560801

25608 169 1 5

HONDA

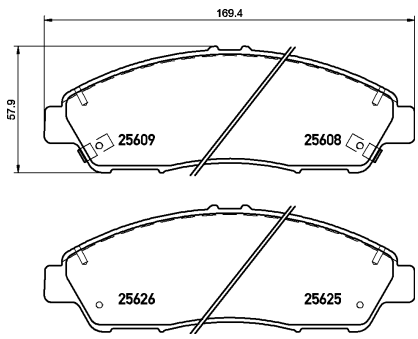

16.9

2561001

25610 187 1 5

TOYOTA

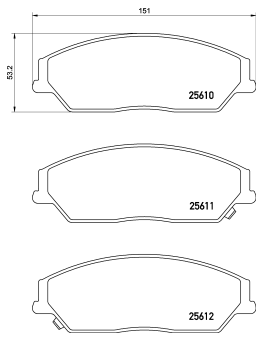

18.7

2563201

25632 164 1 5

FORD, FORD AUSTRALIA, MAZDA

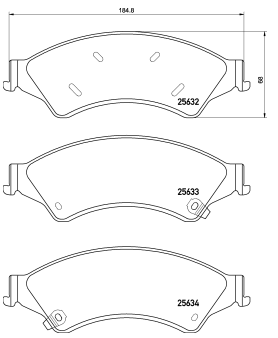

16.4

2564301

25643 167 0 5

AUDI

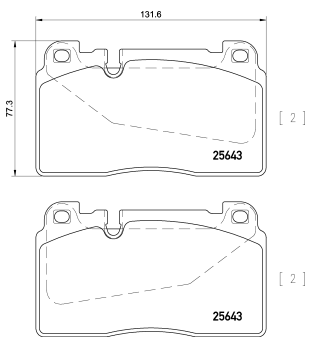

16.7

2564302

25643 156 0 4

AUDI

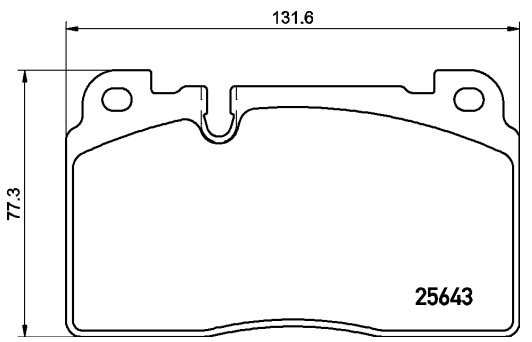

15.6

2564305

25643 167 0 4

AUDI

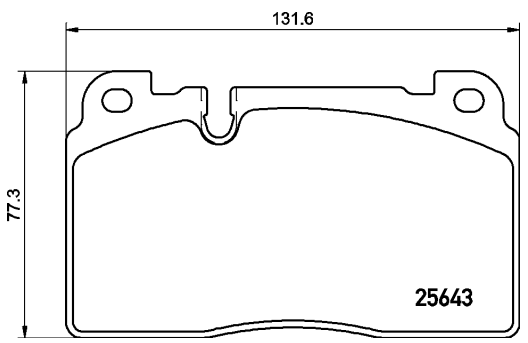

16.7

2564401

25644 177 1 5

KIA

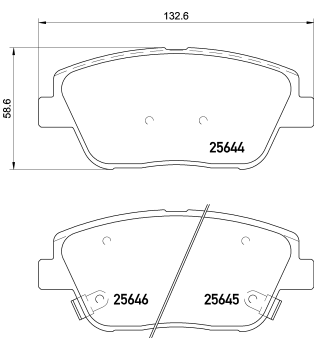

17.7

2564701

25647 157 1 5

HYUNDAI, KIA

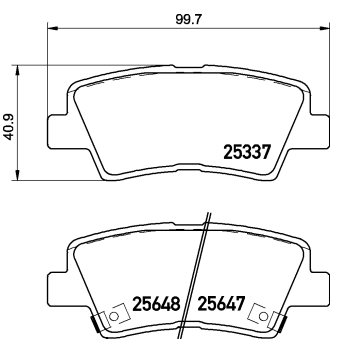

15.7

2565201

25652 171 0 5

FIAT

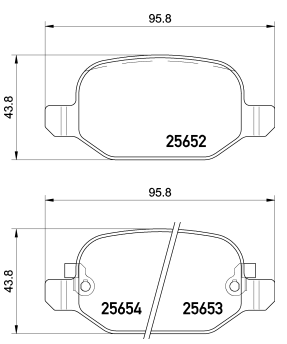

17.1

2567701

25677 159 1 5

KIA

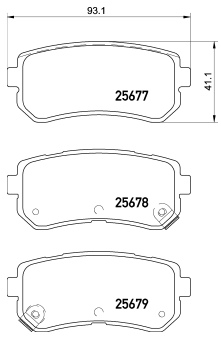

15.9

2568101

25681 180 1 5

SKODA, VOLKSWAGEN

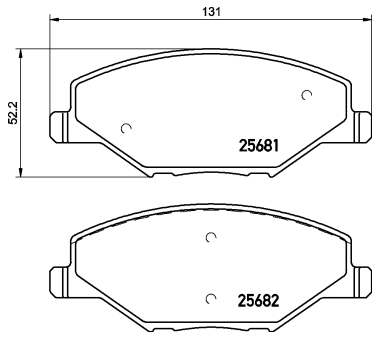

18

2568301

25683 203 1 5

AUDI, SEAT, SKODA, VOLKSWAGEN

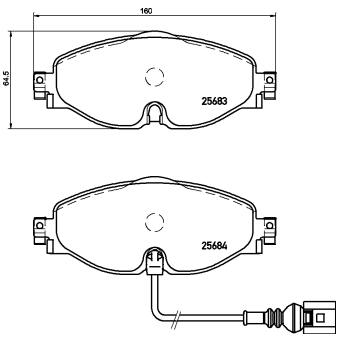

20.3

2568801

25688 143 0 5

CITROËN, MAZDA, MITSUBISHI, PEUGEOT

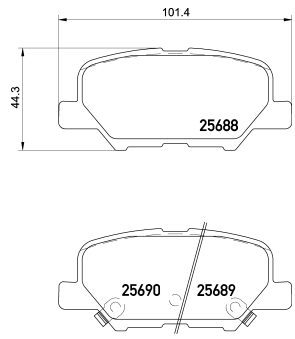

14.3

2569801

25698 187 1 5

TOYOTA

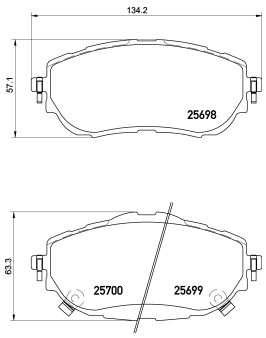

18.7

2570101

25701 169 0 4

PORSCHE

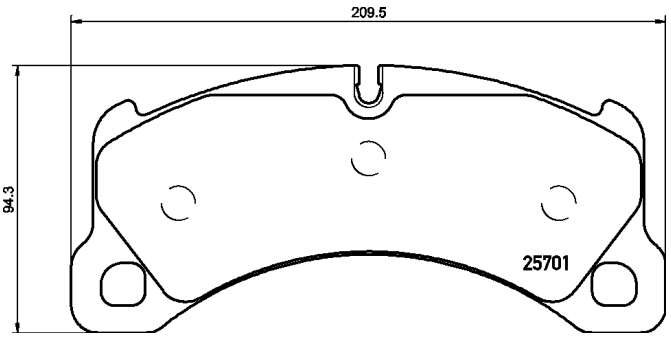

16.9

2570201

25702 180 0 5

DACIA, RENAULT

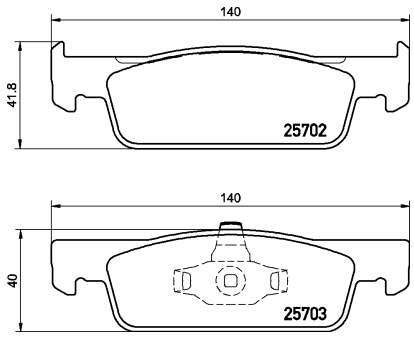

18

2572001

25720 173 1 4

LAND ROVER

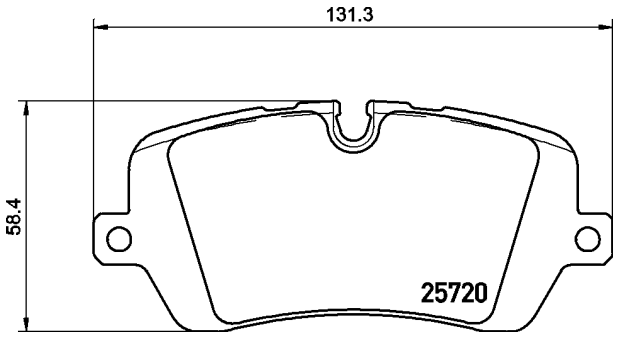

17.3

2572501

25725 155 1 4

MAZDA

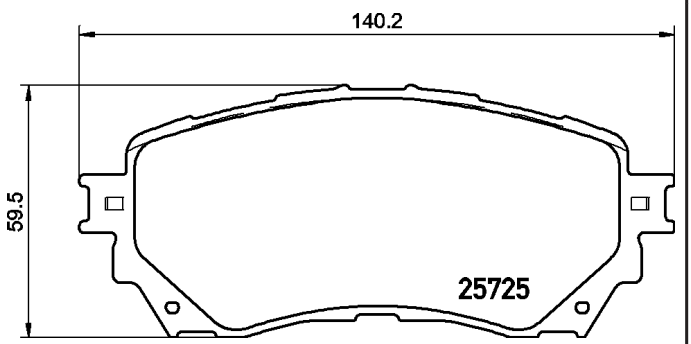

15.5

2573601

25736 179 0 5

FORD, FORD AUSTRALIA

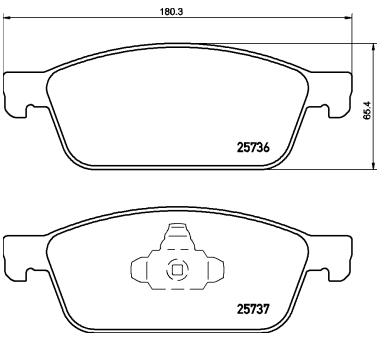

17.9

2573801

25738 180 0 5

DACIA

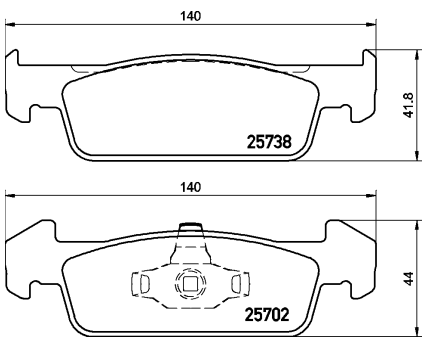

18

2574501

25745 175 0 5

HOLDEN

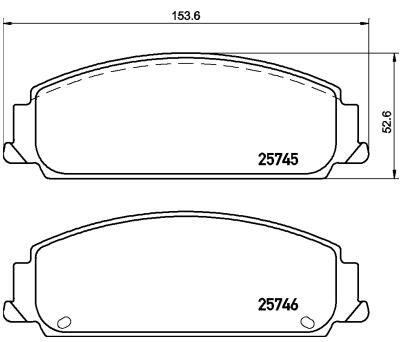

17.5

2574801

25748 182 0 5

FORD, FORD AUSTRALIA

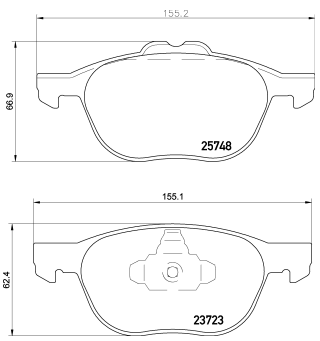

18.2

2575701

25757 178 1 5

KIA

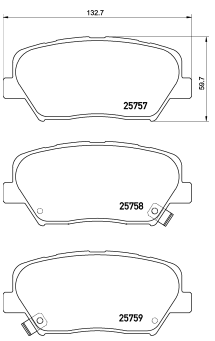

17.8

2576001

25760 167 1 5

SUBARU, TOYOTA

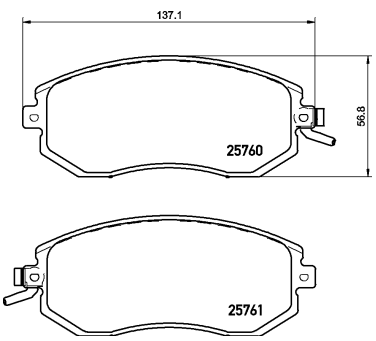

16.7

2577801

25778 138 0 5

INFINITI, NISSAN

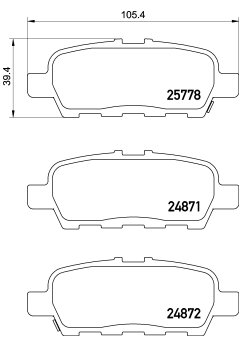

13.8

2580301

25803 187 0 5

JAGUAR

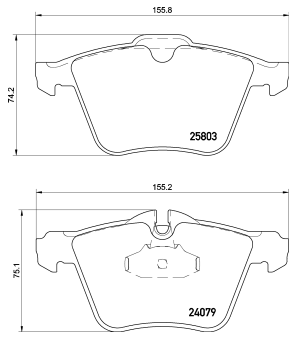

18.7

2582701

25827 173 1 5

CITROËN

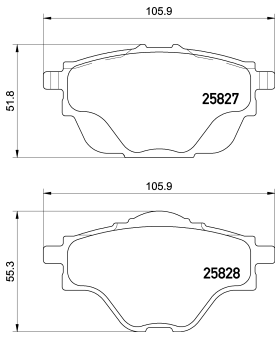

17.3

2583601

25836 170 0 5

CITROËN

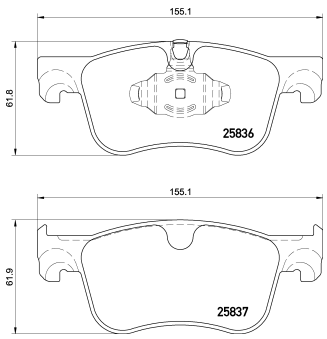

17

2583901

25839 175 1 5

CITROËN, PEUGEOT

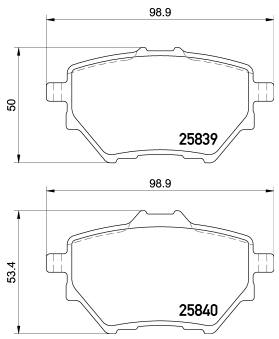

17.5

2584901

25849 162 1 5

JEEP

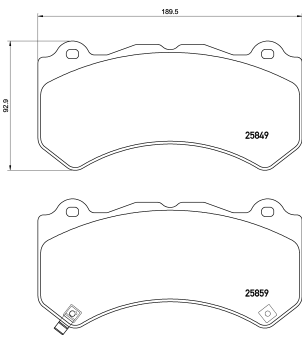

16.2

2585301

25853 154 0 4

FORD AUSTRALIA

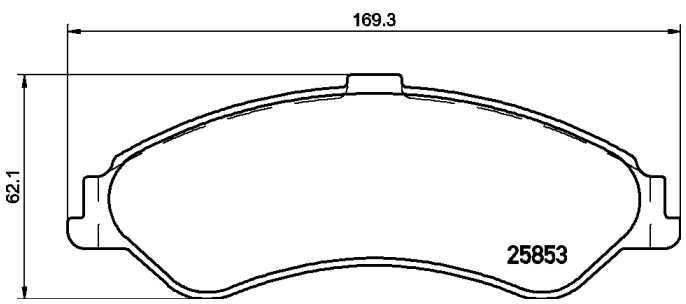

15.4

2585401

25854 129 0 5

FORD AUSTRALIA

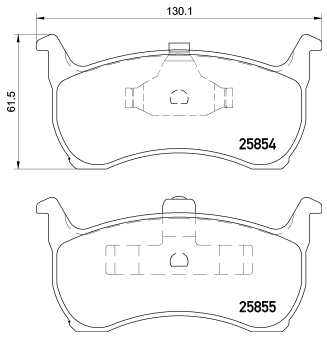

12.9

2585501

25855 129 0 5

FORD AUSTRALIA

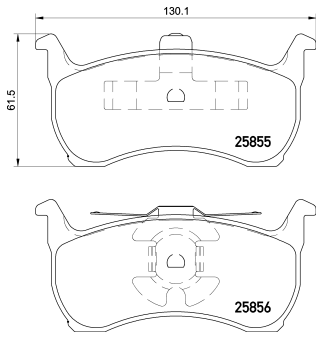

12.9

2907102

29071 170 0 5 T4136

RENAULT TRUCKS

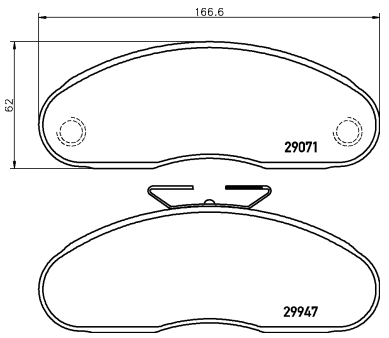

17

2910701

29107 200 0 5 T456

IVECO

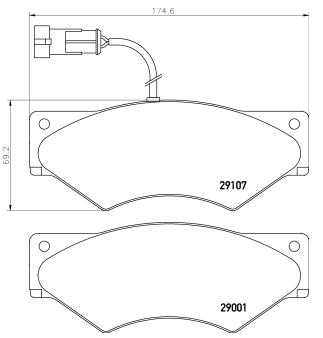

20

2912111

29121 170 0 4 T3035

IVECO

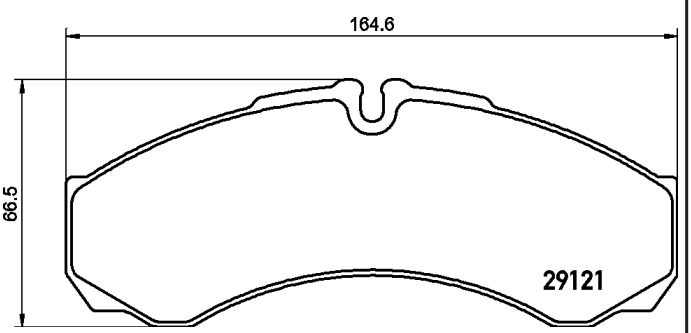

17

2912112

29121 203 0 4 T3035

IVECO, RENAULT TRUCKS

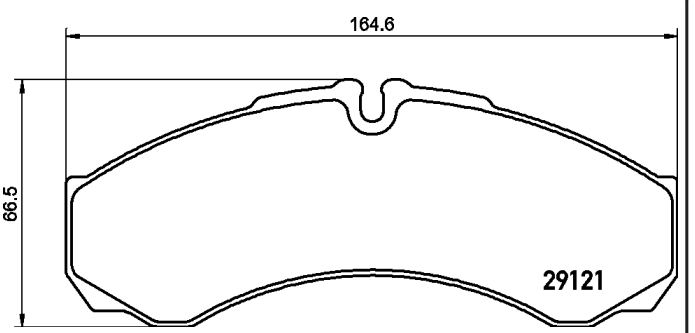

20.3

2912113

29121 203 1 5 T3035

IVECO, NISSAN, RENAULT TRUCKS

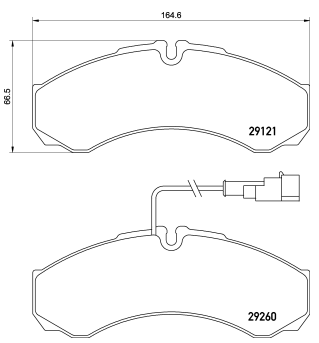

20.3

2912303

29123 203 1 4 T3078

IVECO

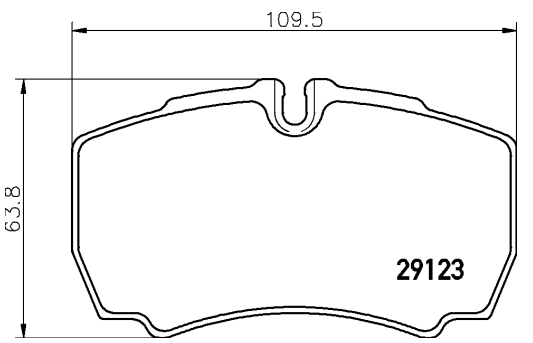

20.3

2912307

29123 203 2 4 T4014

FORD, FORD AUSTRALIA

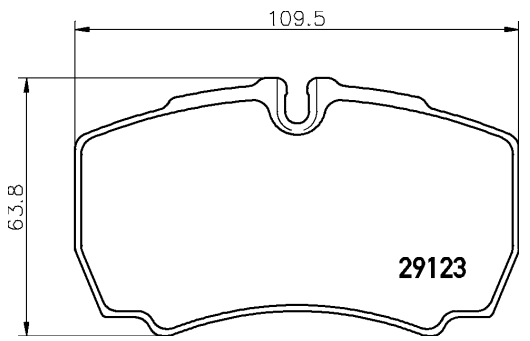

20.3

2913801

29138 180 0 5 T3078

IVECO

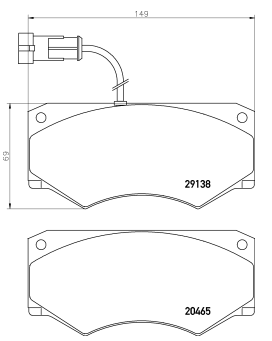

18

2913901

29139 183 0 5 T4136

IVECO

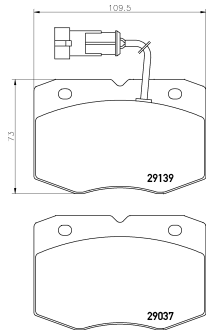

18.3

2914001

29140 183 0 5 T4047

IVECO

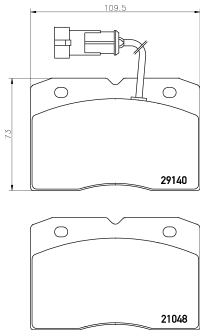

18.3

2915301

29153 200 1 4 T3011

MERCEDES-BENZ, MULTICAR, VOLKSWAGEN

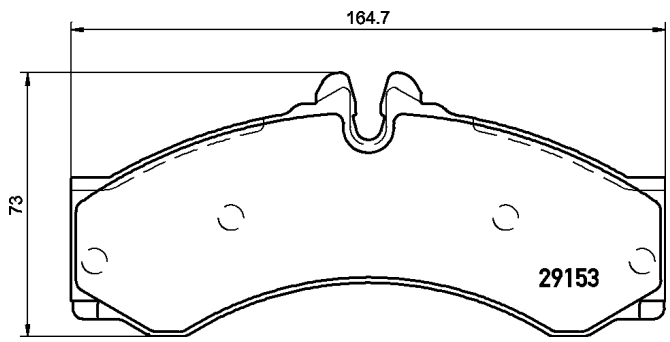

20

2916002

29160 199 0 4 T4136

IVECO, NISSAN, RENAULT TRUCKS

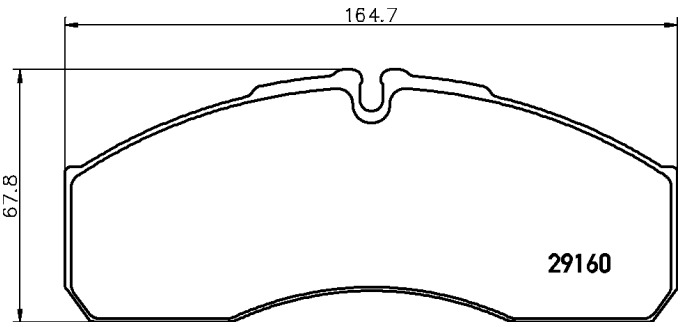

19.9

2919001

29190 190 1 5 T3035

MERCEDES-BENZ, VOLKSWAGEN

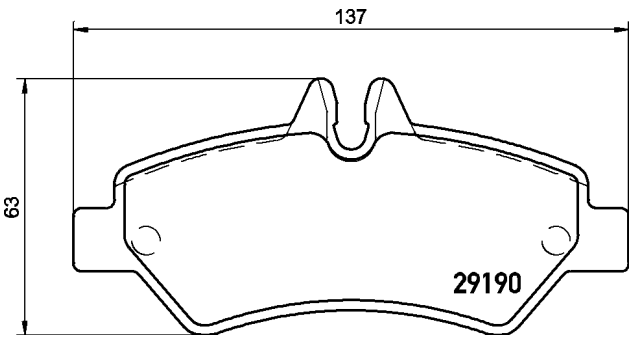

19

2919202

29192 209 4 4 T3036

MERCEDES-BENZ, MERCEDES-BENZ (FJDA), VOLKSWAGEN

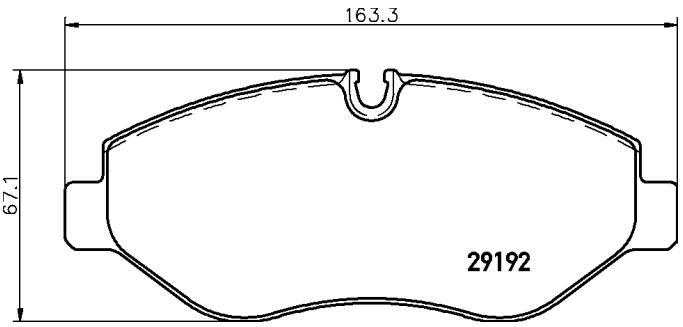

20.9

2920002

29200 209 2 4 T3036

MERCEDES-BENZ, VOLKSWAGEN

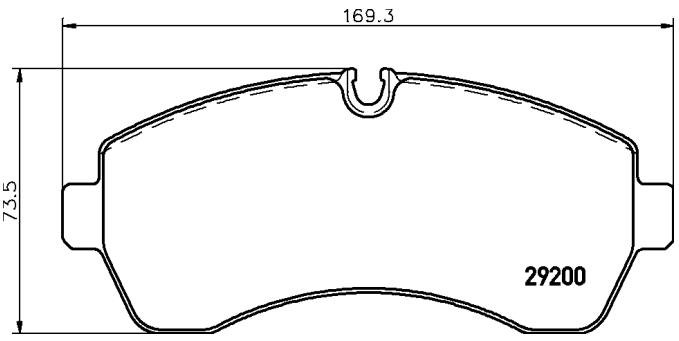

20.9

2920801

29208 170 0 4 T4136

MULTICAR

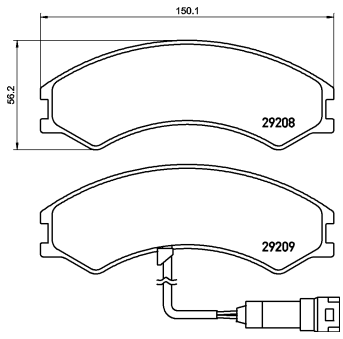

17

2921702

29217 206 1 5 T3038

MERCEDES-BENZ, VOLKSWAGEN

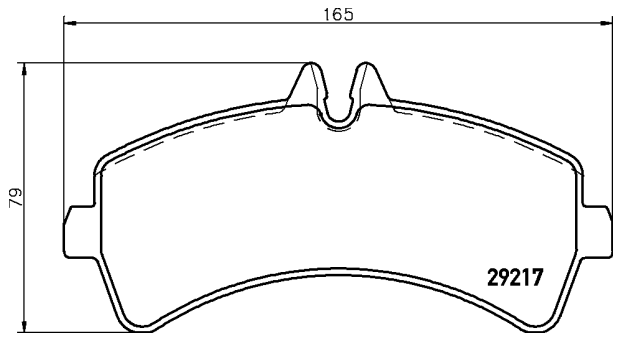

20.6

2922901

29229 214 1 4 T4136

IVECO

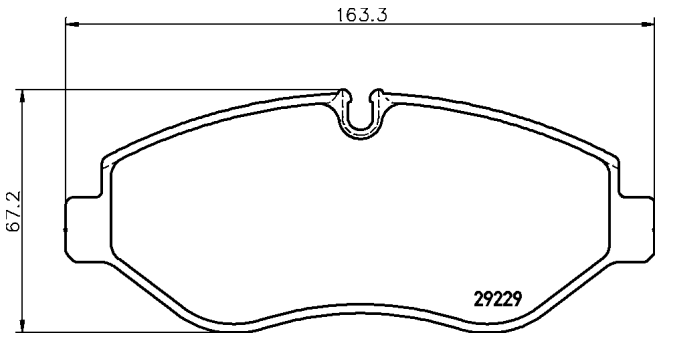

21.4

2922902

29229 214 1 5 T4136

NISSAN, RENAULT TRUCKS

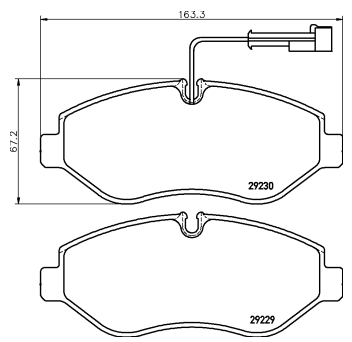

21.4

2923201

29232 210 1 4 T4136

IVECO

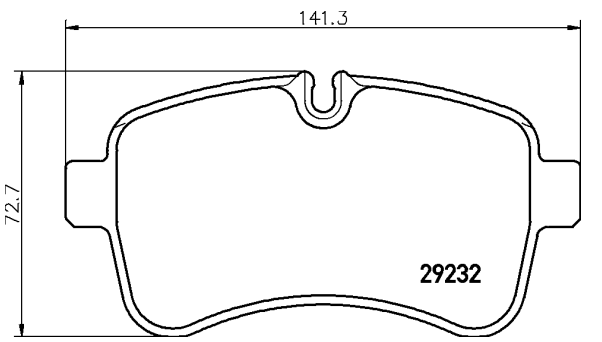

21

2923701

29237 199 1 4 T3018

MERCEDES-BENZ

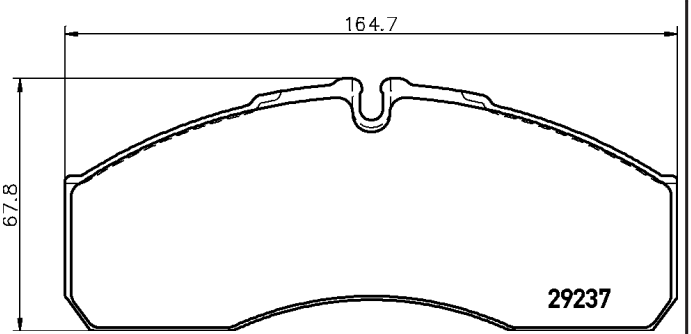

19.9

2924001

29240 173 0 5 T4136

MITSUBISHI

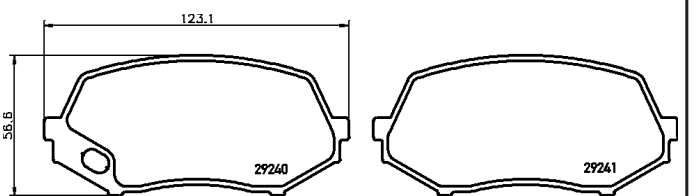

17.3

2924201

29242 195 0 5 T4136

MITSUBISHI

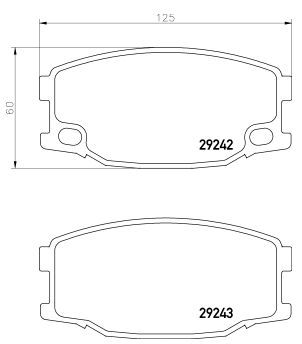

19.4

2924901

29249 193 0 5 T4136

MITSUBISHI

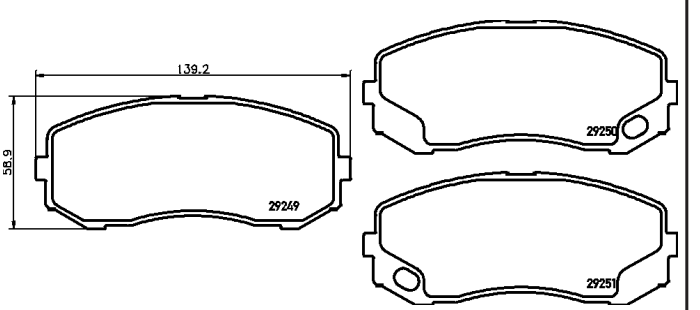

19.3

2929601

29296 200 0 5 T3035

TOYOTA

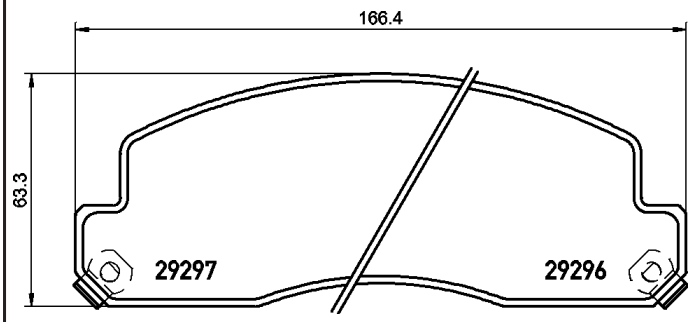

20

2970602

29706 170 0 5 T4136

NISSAN

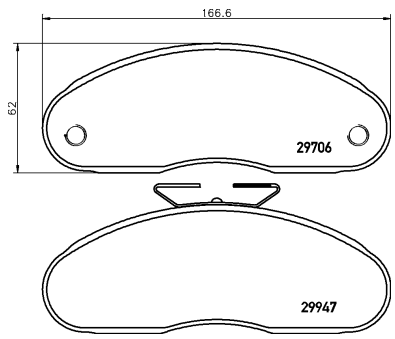

17

2983506

29835 220 0 4 T3018

MERCEDES-BENZ

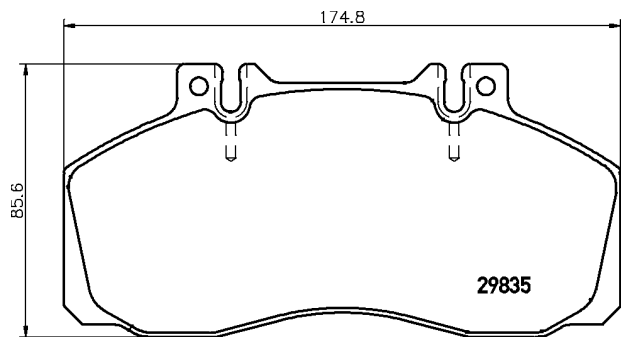

22

2998401

29984 170 0 5 T4136

NISSAN

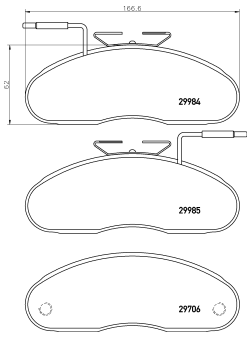

17

2998501

29985 170 0 5 T4136

RENAULT TRUCKS

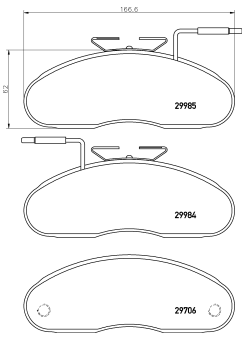

17

82017000

MERCEDES-BENZ, PUCH

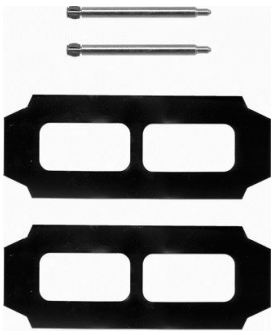

82017500

CITROËN, PEUGEOT

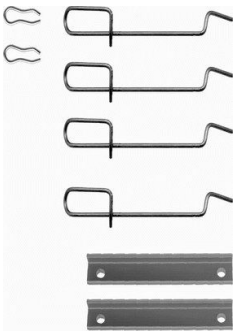

82019500

MERCEDES-BENZ

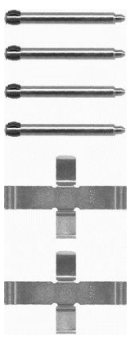

82025700

HOLDEN, OPEL, SAAB, VAUXHALL

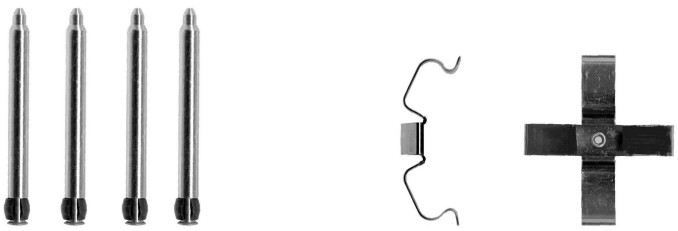

82025800

OPEL, VAUXHALL

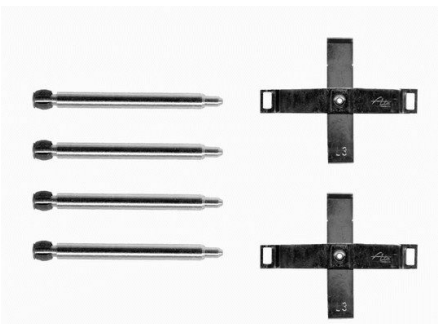

82026300

VOLVO

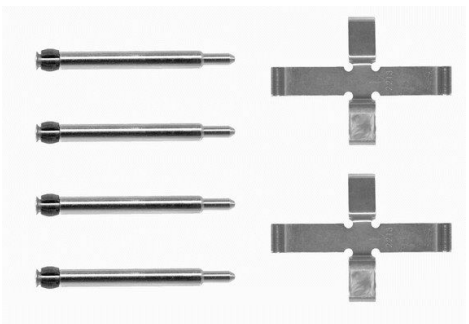

82026600

TOYOTA

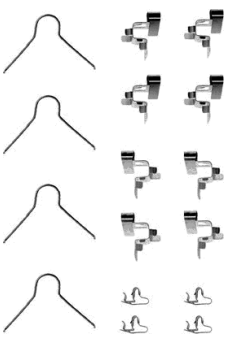

82026700

SEAT, VOLKSWAGEN



82026800

CITROËN

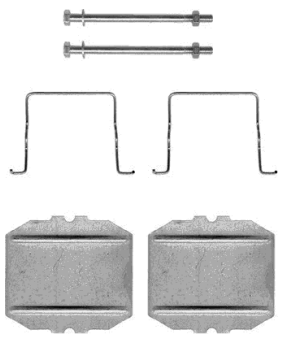

82027000

FIAT, FSO

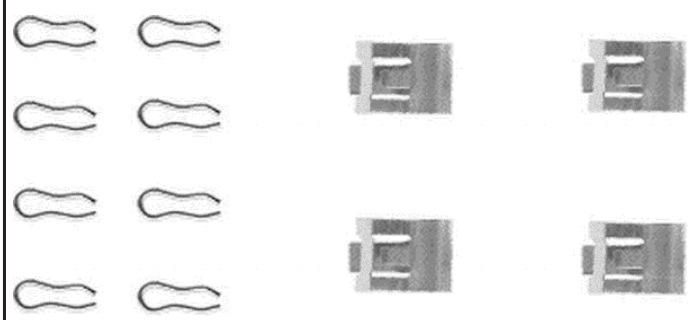

82027100

FIAT, TVR

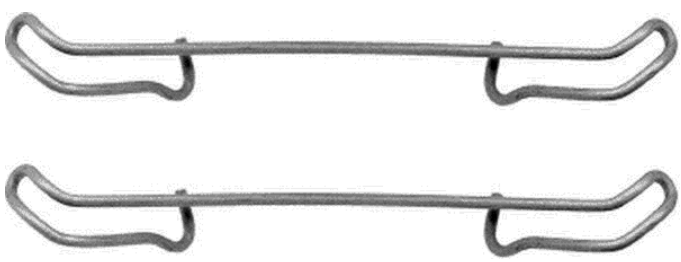

82027300

MAZDA

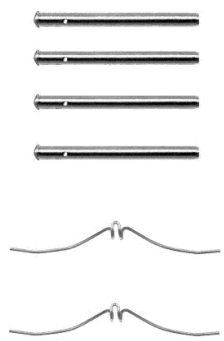

82027400

NISSAN

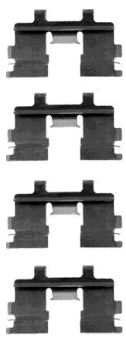

82028000

CITROËN, PEUGEOT



82028300

VOLKSWAGEN

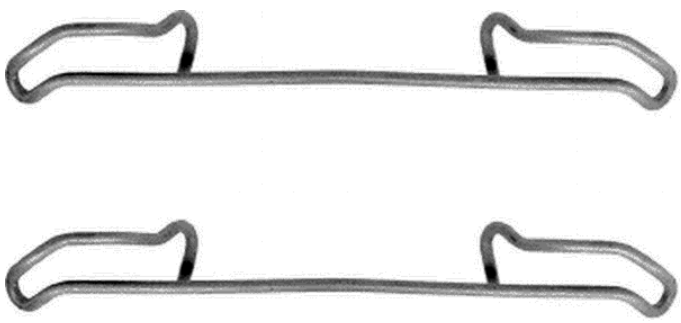

82028400

HONDA, MG, ROVER

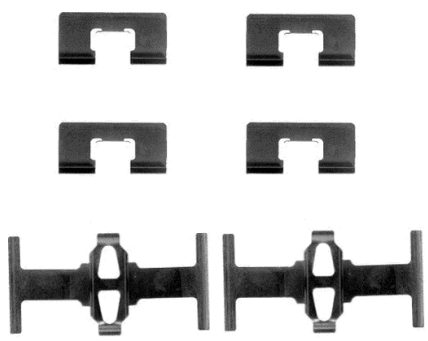

82028600

BMW, MG, ROVER

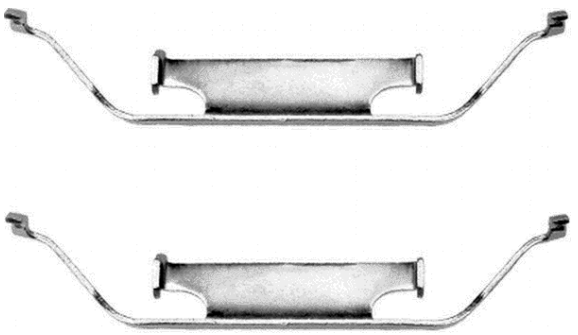

82028700

BMW, BMW (BRILLIANCE), MG, ROEWE (SAIC), ROVER, WIESMANN

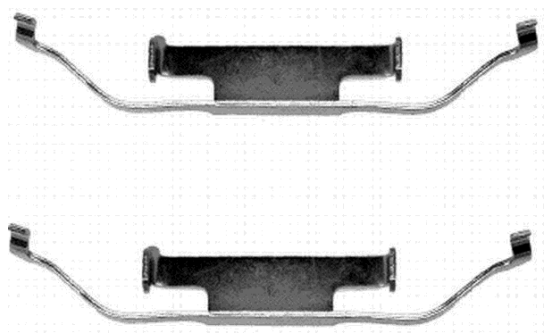

82028800

VOLKSWAGEN

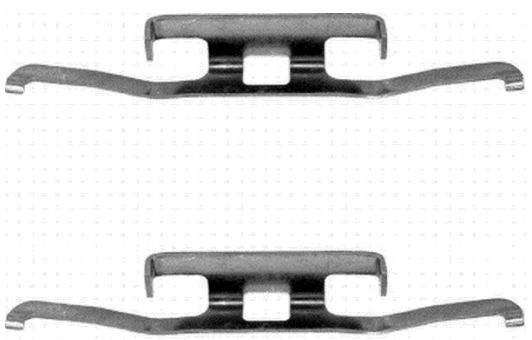

82028900

DAEWOO, OPEL, VAUXHALL

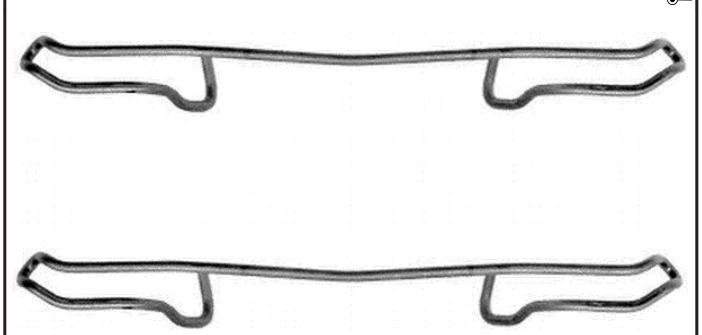

82029000

CITROËN, DALLAS



82029200

BMW, CHRYSLER, DAIHATSU, FIAT, FORD, FORD AUSTRALIA, KIA, LANCIA, MAZDA, TOYOTA, VOLVO

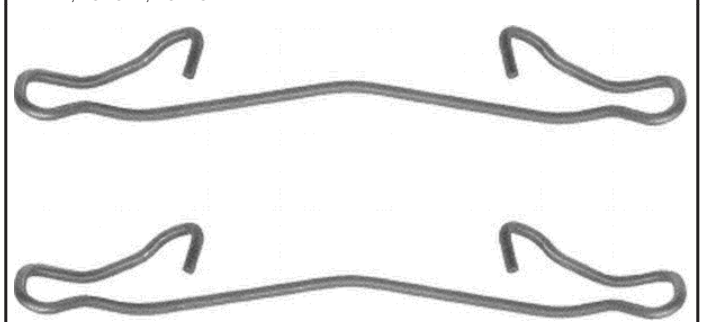

82029300

AUDI, AUDI (FAW), CADILLAC, CHEVROLET, DAIHATSU, DAIMLER, FORD, FORD AUSTRALIA, FORD USA, HOLDEN, JAGUAR, MAZDA, PEUGEOT, SAAB, SEAT, SKODA, TOYOTA, VOLKSWAGEN, VOLKSWAGEN (SVW), VOLVO

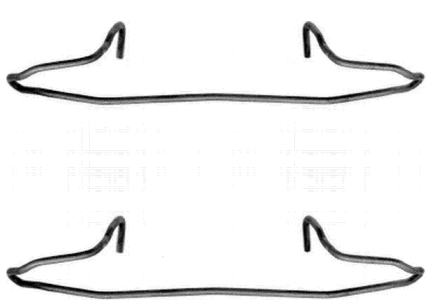

82029500

CITROËN, PEUGEOT, RENAULT

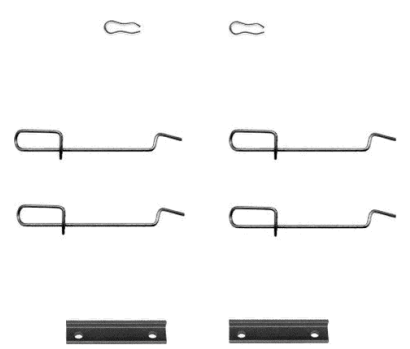

82030100

FORD

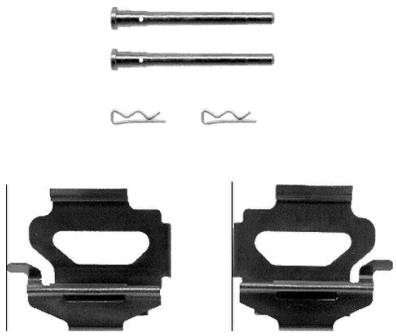

82030200

CITROËN, FIAT, FORD, PEUGEOT

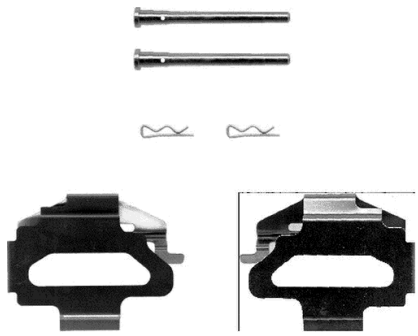

82030300

CITROËN, PEUGEOT

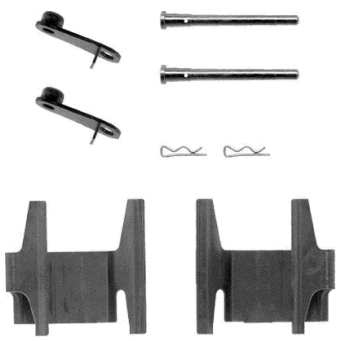

82030400

PEUGEOT

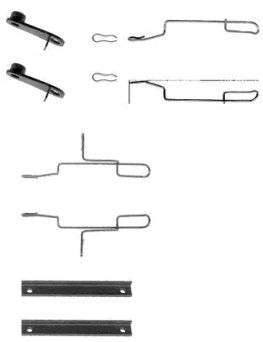

82030500

ALFA ROMEO, ALPINA, BMW, WIESMANN

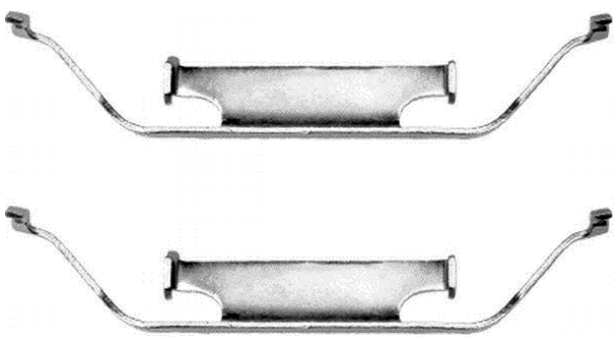

82030600

CHEVROLET, CITROËN, HOLDEN, KIA, OPEL, PEUGEOT, VAUXHALL, ZAZ

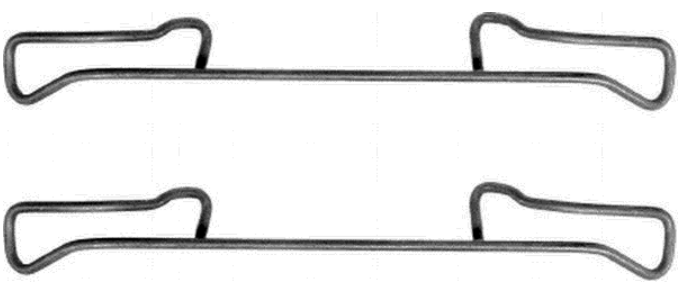

82030900

CITROËN, FIAT, LANCIA, PEUGEOT, VOLVO

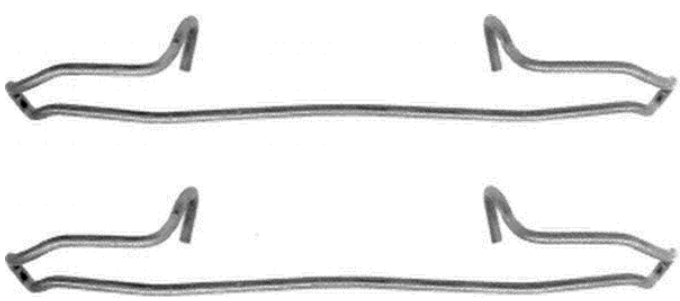

82031100

HYUNDAI, MITSUBISHI, PROTON

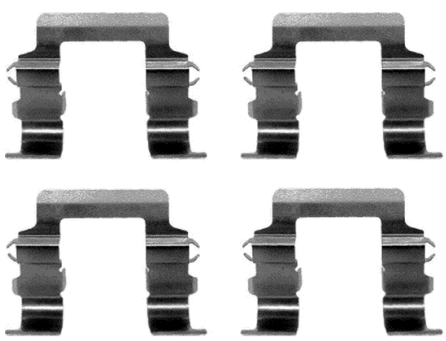

82031200

DAIHATSU, HUALI, MITSUBISHI, TOYOTA (FAW)



82031400

MITSUBISHI

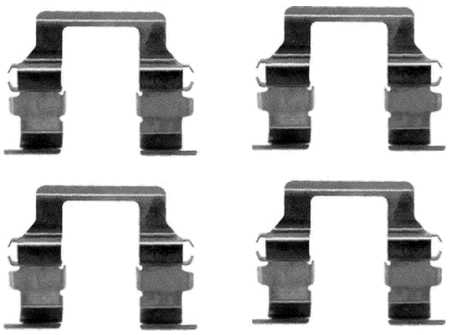

82031600

FORD, FORD AUSTRALIA, FORD USA, MERCURY



82031900

AC, TVR

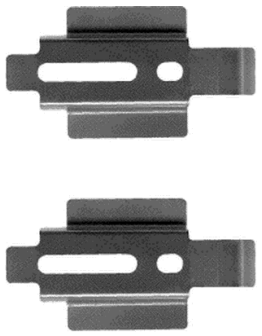

82032000

ALFA ROMEO, CHEVROLET, CHRYSLER, CITROËN, DACIA, FIAT, FORD, FORD AUSTRALIA, HOLDEN, HONDA, LANCIA, MAZDA, MAZDA (CHANGAN), MERCEDES-BENZ, MG, MINI, NISSAN, OPEL, PEUGEOT, RENAULT, ROEWE (SAIC), ROVER, SAAB, VAUXHALL, VOLVO, VOLVO (CHANGAN)

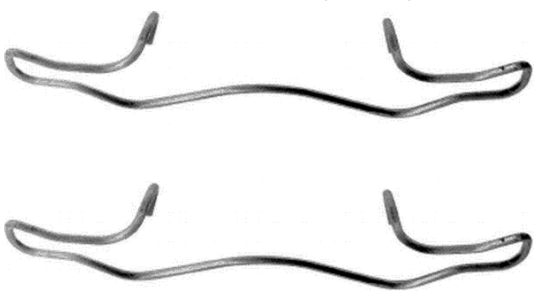

82032100

FORD, FORD AUSTRALIA, FORD USA, MERCURY, RENAULT

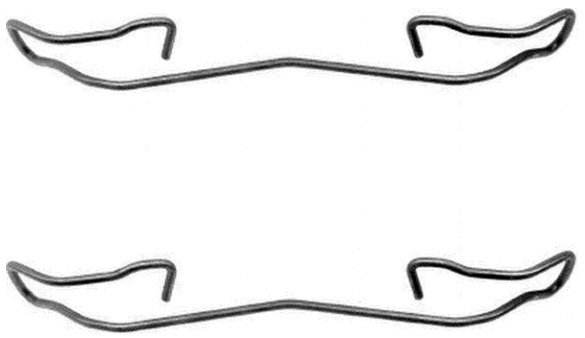

82032200

MEGA, PEUGEOT

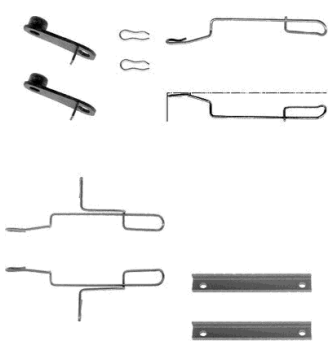

82032300

ALFA ROMEO, NISSAN

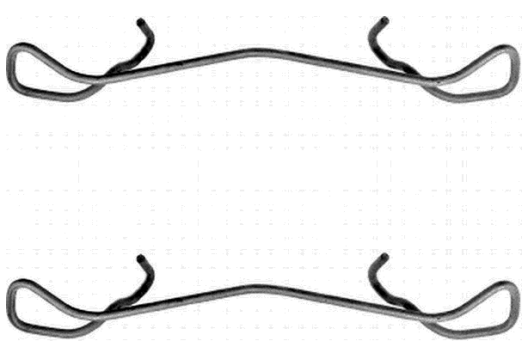

82032400

VOLKSWAGEN



82032700

CITROËN, MITSUBISHI, MITSUBISHI (BJC), PEUGEOT

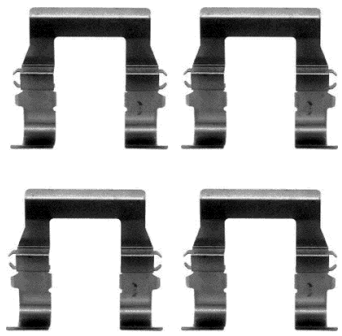

82032800

CHRYSLER, MERCEDES-BENZ

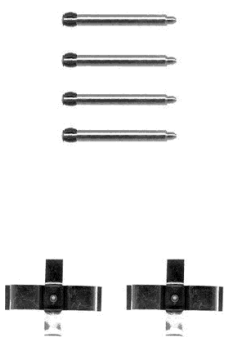

82032900

MITSUBISHI

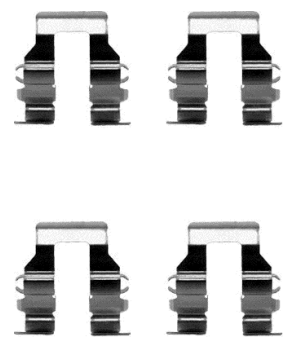

82033000

SEAT, VOLKSWAGEN



82033200

RENAULT

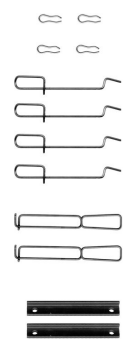

82033300

RENAULT

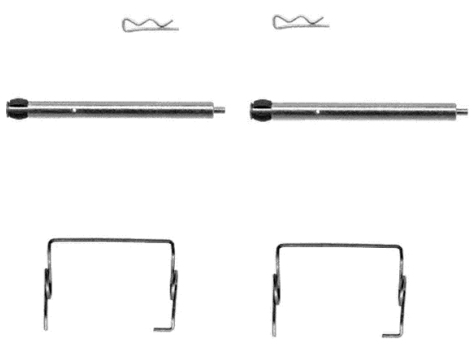

82033400

LEXUS, TOYOTA

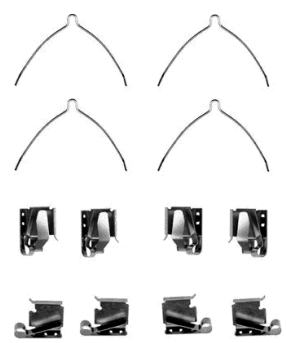

82033500

EUNOS, MAZDA

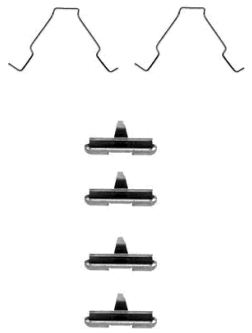

82033600

FIAT, LANCIA, ZASTAVA

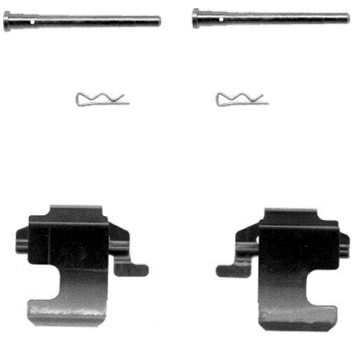

82033700

HOLDEN, OPEL, VAUXHALL

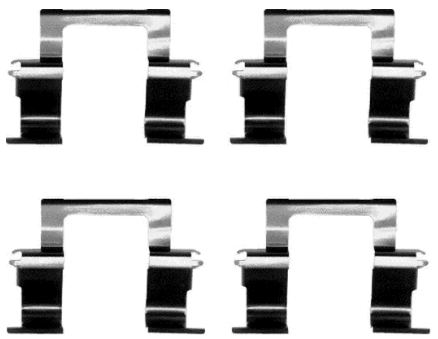

82033800

ACURA, HOLDEN, ISUZU, OPEL, VAUXHALL

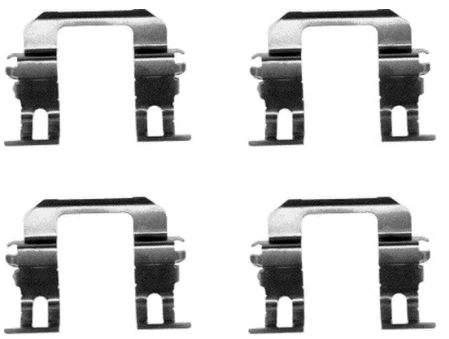

82037300

ALFA ROMEO, AUDI, CITROËN, CITROËN (DF-PSA), FIAT, FORD, LANCIA, NISSAN, PEUGEOT, RENAULT, SEAT, SKODA, SKODA (SVW), TOYOTA, VOLKSWAGEN, VOLKSWAGEN (FAW)



82039300

BMW, FORD, FORD (CHANGAN), LAND ROVER, VOLVO, VOLVO (CHANGAN)



82039400

MAZDA

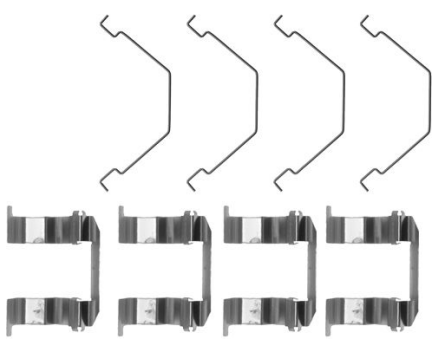

82039500

NISSAN

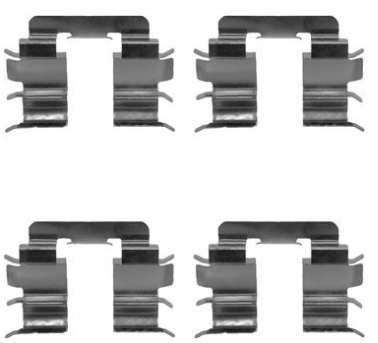

82039700

MERCEDES-BENZ, PEUGEOT

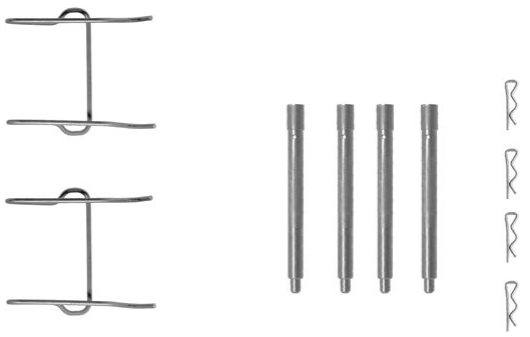

82039900

MERCEDES-BENZ, MERCEDES-BENZ (BBDC)

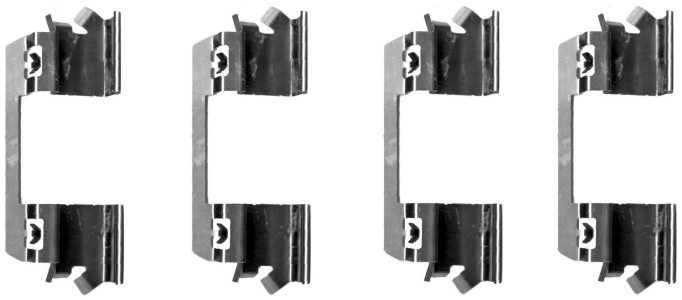

82042600

ROVER

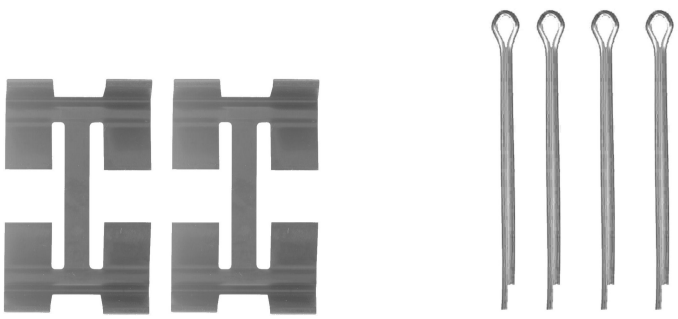

82044500

SUBARU, SUZUKI, TATA (TELCO)



82044600

CHEVROLET, DAEWOO, HOLDEN

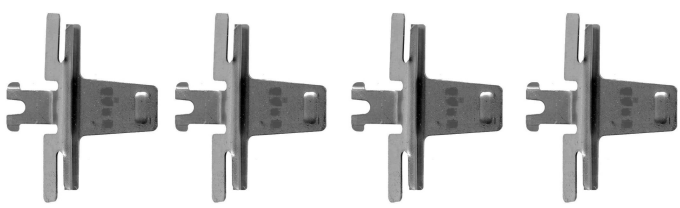

82046000

MERCEDES-BENZ

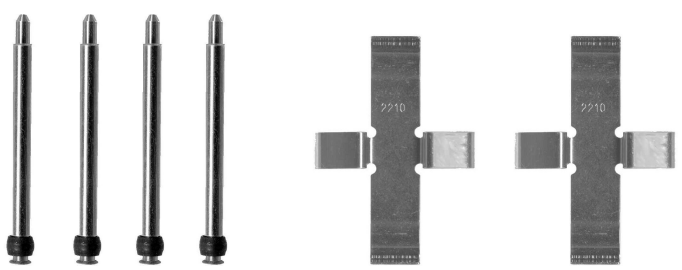

82047200

DAIHATSU

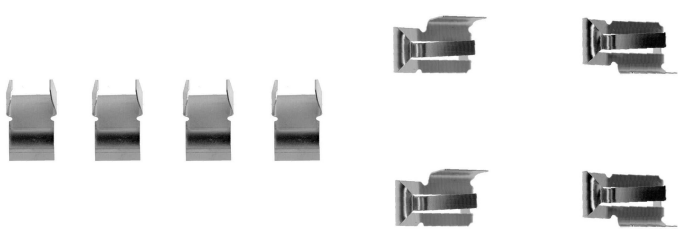

82047400

KIA, MAZDA

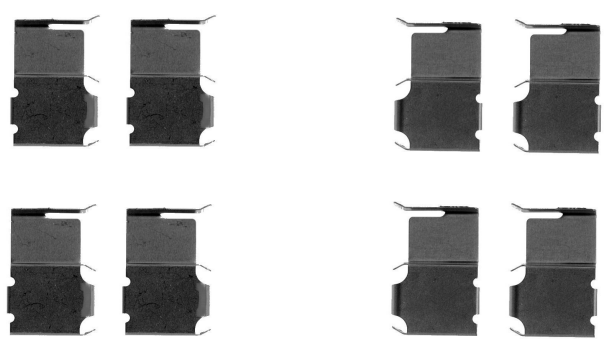

82048300

TOYOTA

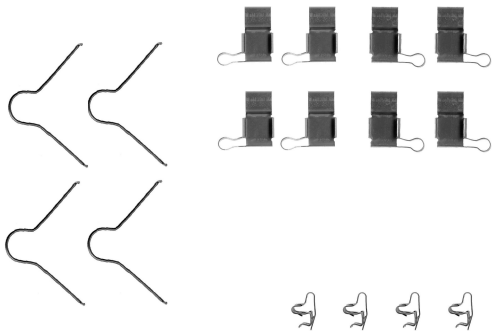

82048500

HONDA, ROVER

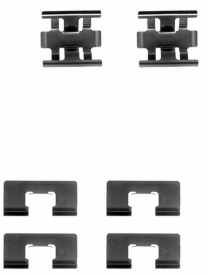

82049500

OPEL, VAUXHALL

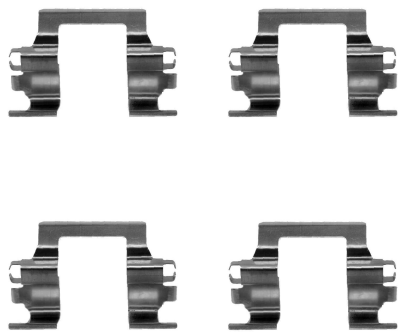

82049600

ACURA, HONDA

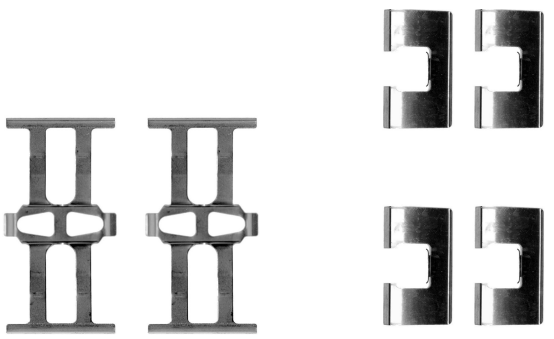

82049900

LAND ROVER

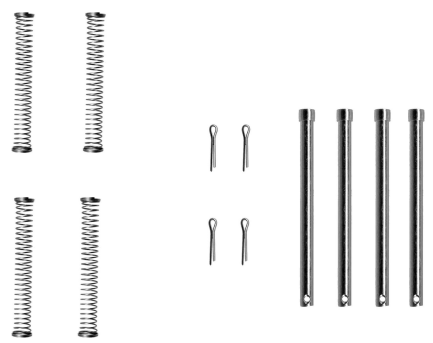

82050000

LEXUS, TOYOTA, TOYOTA (FAW)

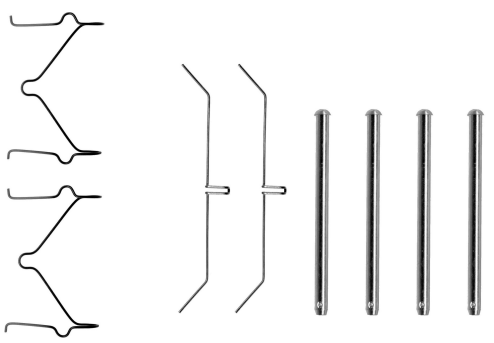

82050200

LEXUS, TOYOTA, TOYOTA (FAW)

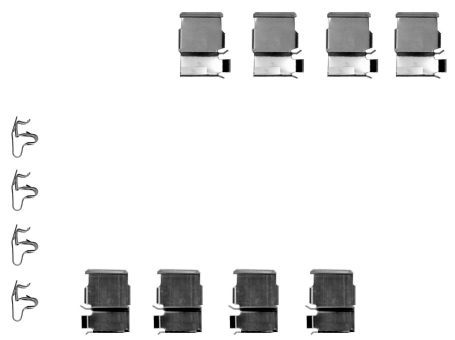

82051500

MAZDA

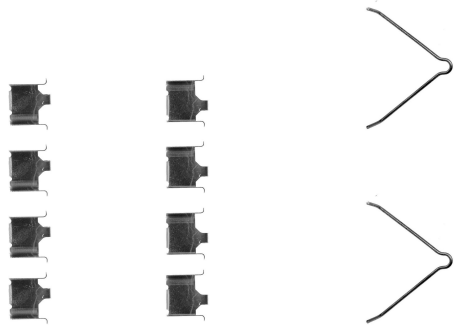

82051600

DAIHATSU, MAZDA, SUZUKI

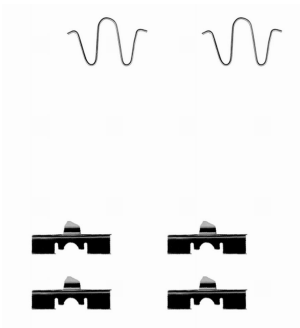

82051700

NISSAN



82051800

LAND ROVER

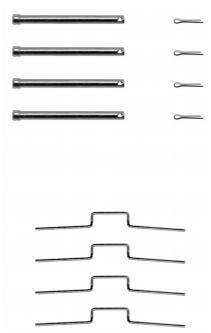

82052100

HYUNDAI, KIA, NISSAN

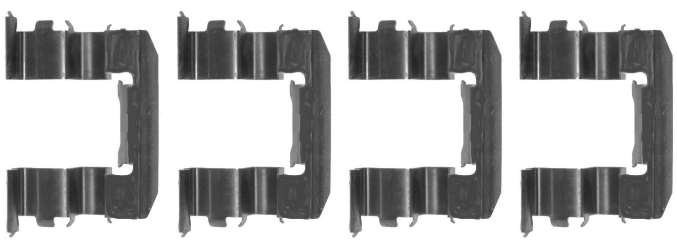

82052200

FORD

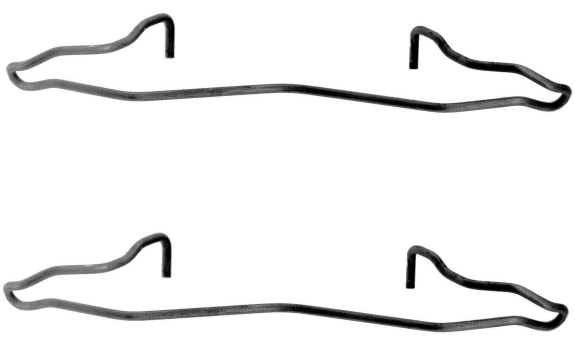

82052600

SUZUKI

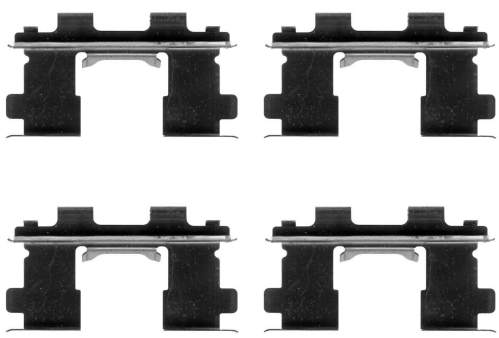

82052900

TOYOTA

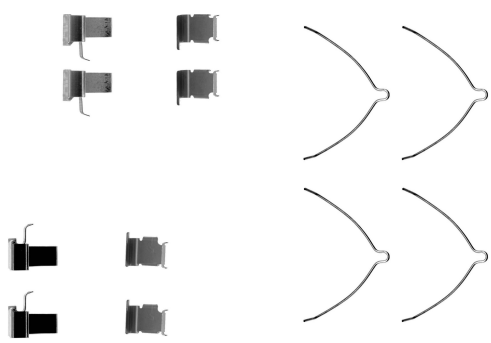

82053000

TOYOTA

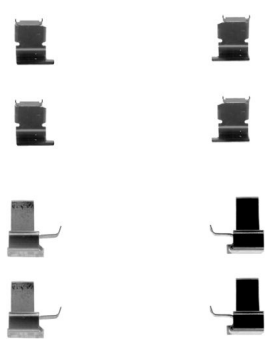

82054100

KIA, MERCEDES-BENZ, RENAULT

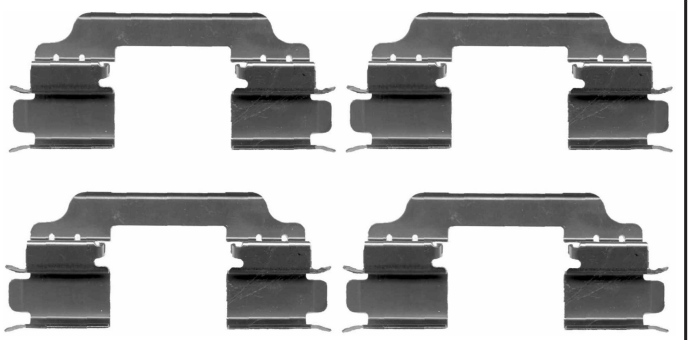

82054200

ALFA ROMEO, CHRYSLER, CITROËN, CITROËN (DF-PSA), FIAT, FORD, FORD AUSTRALIA, HONDA, LANCIA, MERCEDES-BENZ, MERCEDES-BENZ (FJDA), OPEL, PEUGEOT, PEUGEOT (DF-PSA), RENAULT, TOYOTA, VAUXHALL, VOLKSWAGEN

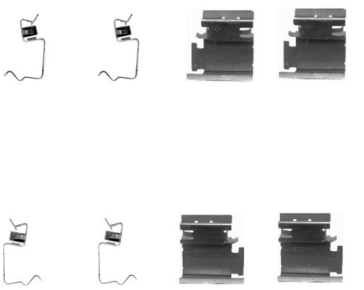

82054300

ALFA ROMEO, AUDI, CHRYSLER, CITROËN, FIAT, FORD, FORD AUSTRALIA, HONDA, JAGUAR, LANCIA, OPEL, PEUGEOT, PEUGEOT (DF-PSA), RENAULT, SEAT, SKODA, SKODA (SVW), TOYOTA, VAUXHALL, VOLKSWAGEN, VOLKSWAGEN (SVW)



82054900

ALFA ROMEO, AUDI, AUDI (FAW), DACIA, LAND ROVER, RENAULT, TOYOTA, VOLKSWAGEN, VOLVO, VOLVO (CHANGAN)

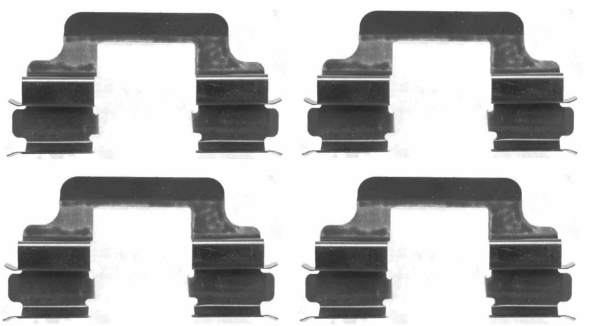

82055100

OPEL, SAAB, VAUXHALL

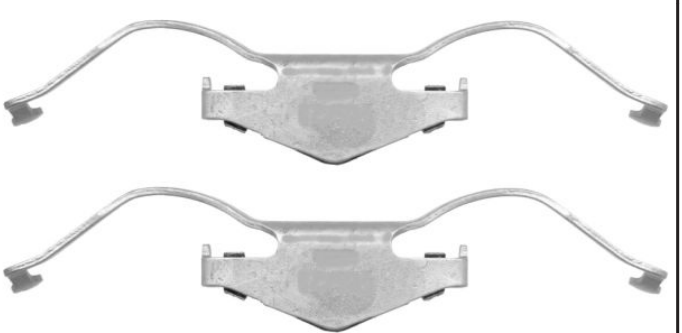

82055400

CITROËN, FIAT, LANCIA, MERCEDES-BENZ, PEUGEOT, SEAT, SKODA, SKODA (SVW), VOLKSWAGEN

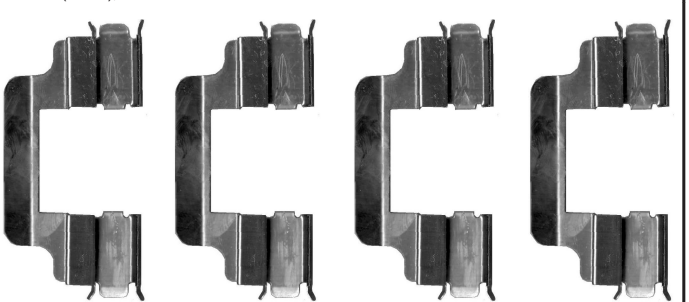

82055600

MERCEDES-BENZ

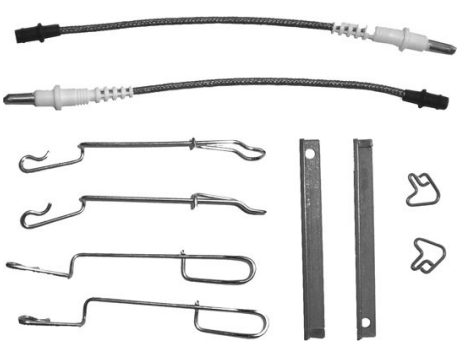

82055800

MERCEDES-BENZ

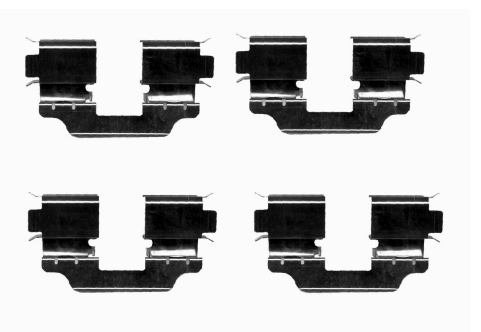

82055900

MERCEDES-BENZ, SUZUKI

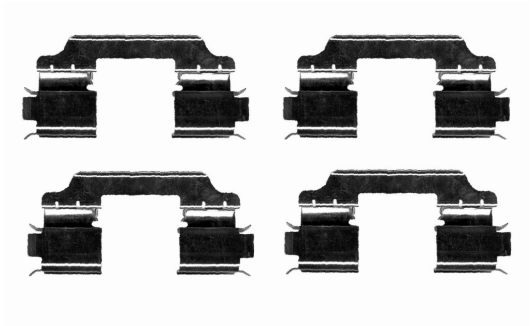

82056600

NISSAN

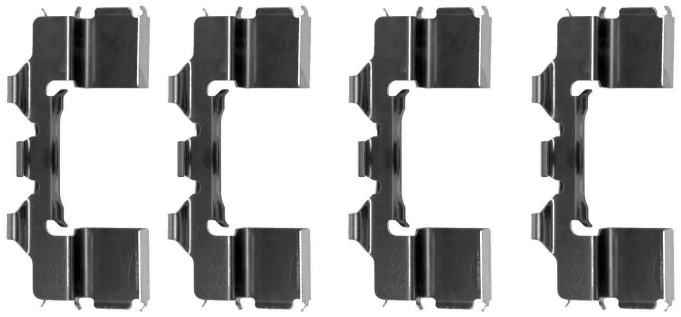

82056900

FORD ASIA / OZEANIA, KIA

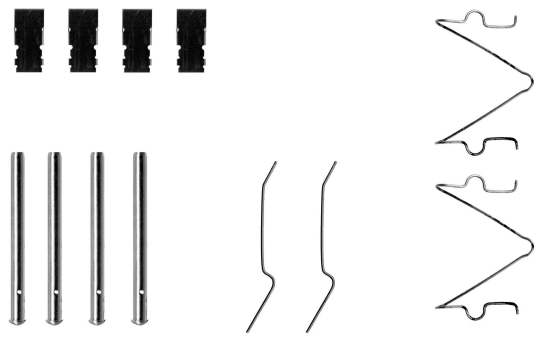

82057000

NISSAN

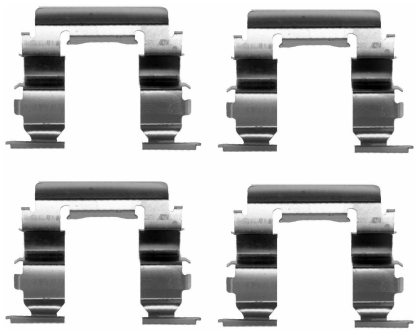

82057100

HYUNDAI, MITSUBISHI



82057200

NISSAN

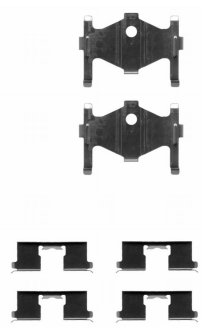

82057300

MITSUBISHI

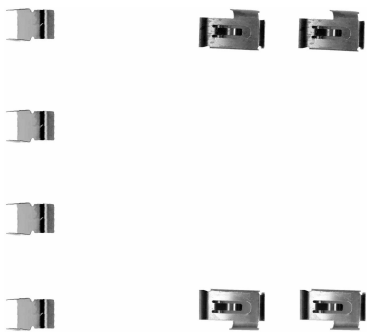

82057400

MERCEDES-BENZ, VOLKSWAGEN

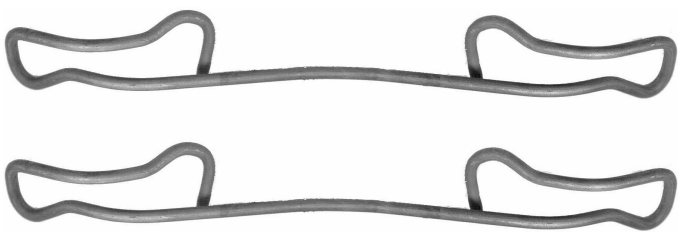

82057500

ALPINA, BENTLEY, BMW, BMW (BRILLIANCE), LAND ROVER, ROLLS-ROYCE



82057700

HONDA, HONDA (GAC)

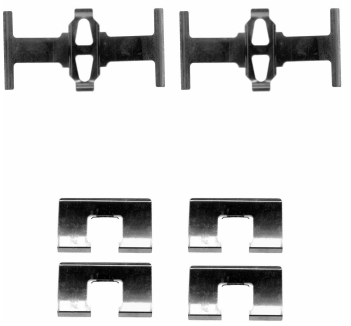

82057800

NISSAN

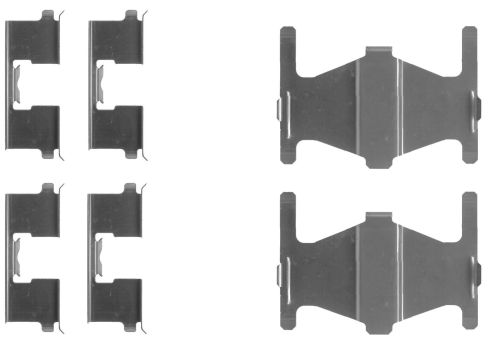

82057900

NISSAN

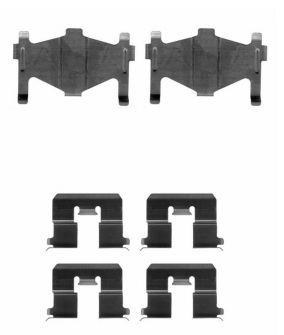

82058100

HONDA, ROVER

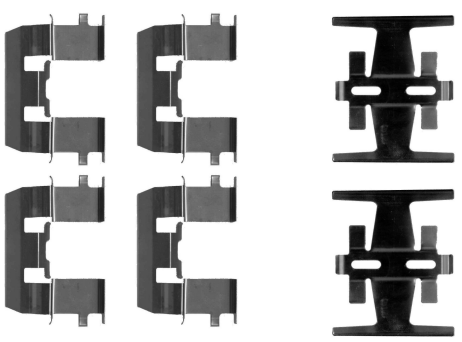

82058200

MAZDA

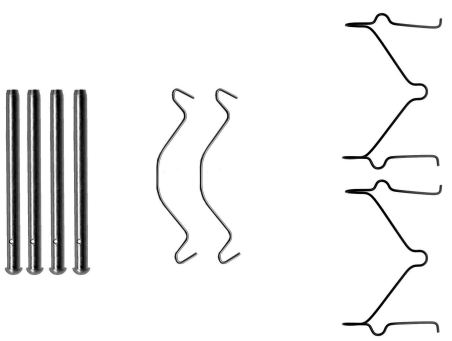

82058400

MERCEDES-BENZ, VOLKSWAGEN

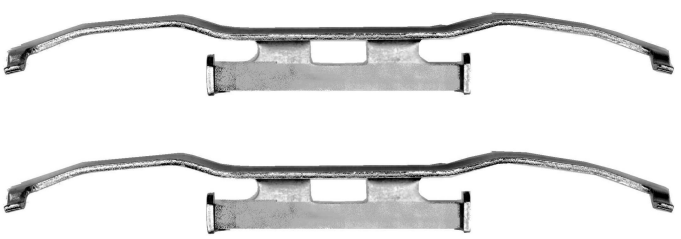

82058500

MG, ROVER

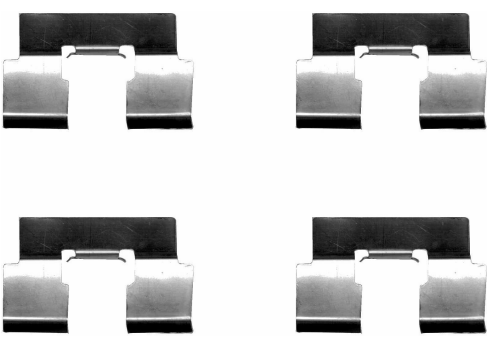

82058600

MERCEDES-BENZ

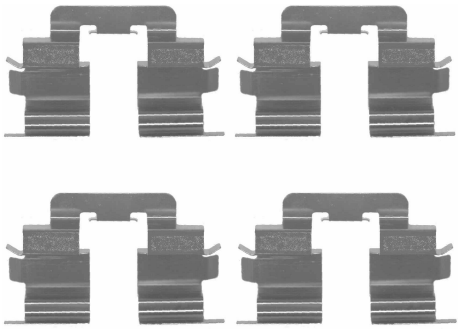

82058700

MERCEDES-BENZ

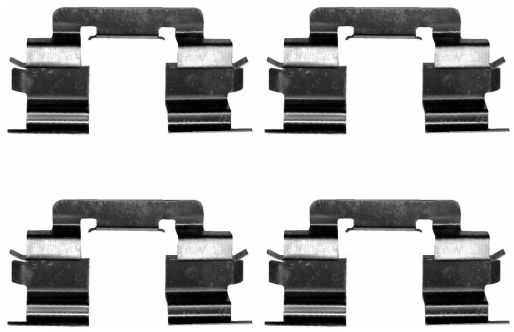

82058800

CHRYSLER, MERCEDES-BENZ



82058900

HONDA, MITSUBISHI, PROTON, SMART, VOLVO



82059000

MERCEDES-BENZ, VOLKSWAGEN

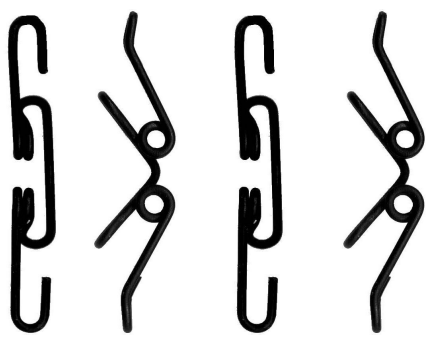

82059100

ALPINA, BMW

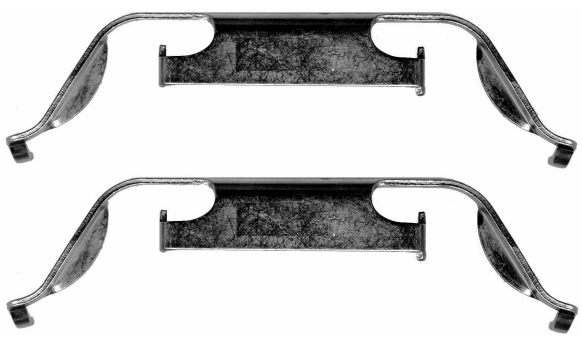

82059200

AUDI, BMW, MERCEDES-BENZ, VOLKSWAGEN, VOLVO

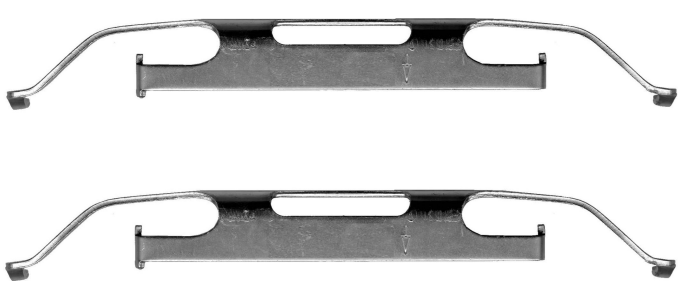

82059300

BMW, BMW (BRILLIANCE)



82059400

TOYOTA

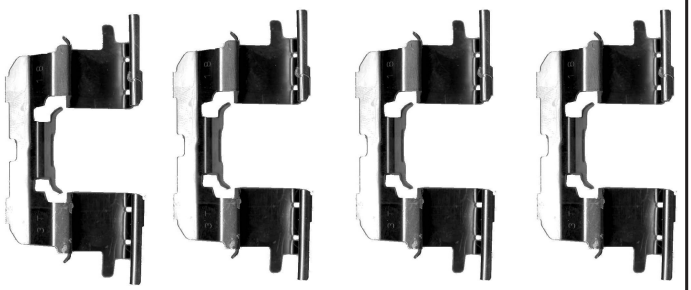

82059500

CITROËN, FIAT, LANCIA, MERCEDES-BENZ, PEUGEOT

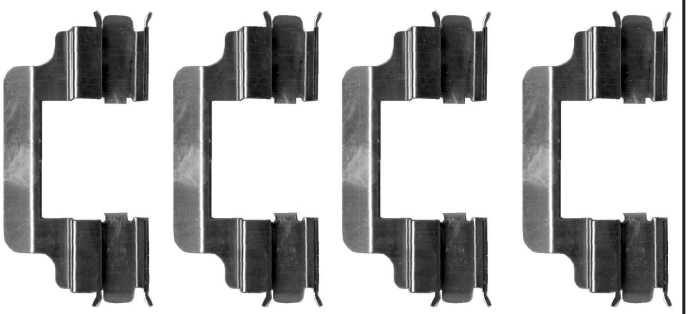

82059600

FORD, SEAT, VOLKSWAGEN

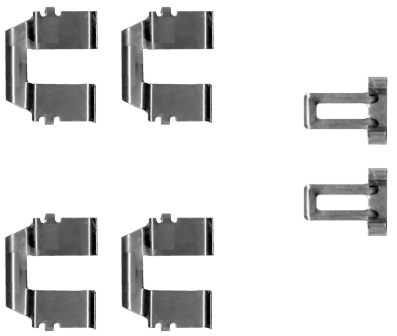

82059700

NISSAN

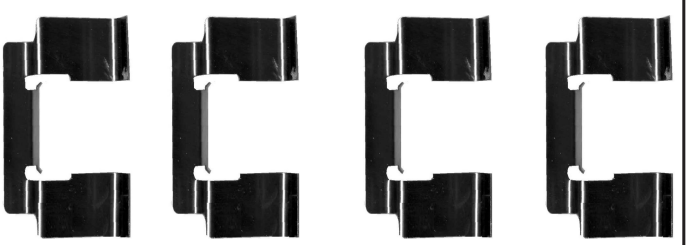

82059800

CITROËN

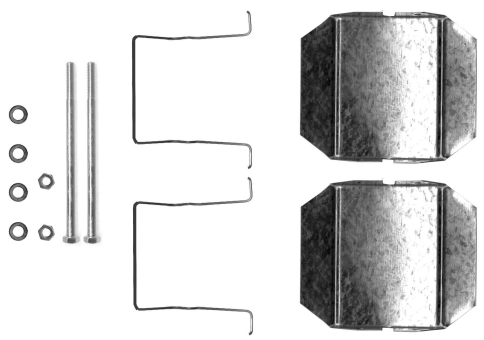

82059900

CITROËN, CITROËN (DF-PSA)

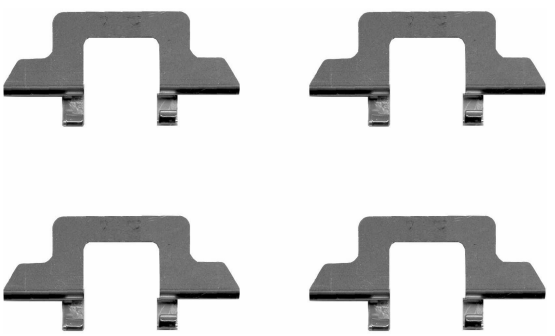

82060000

MAZDA, MITSUBISHI

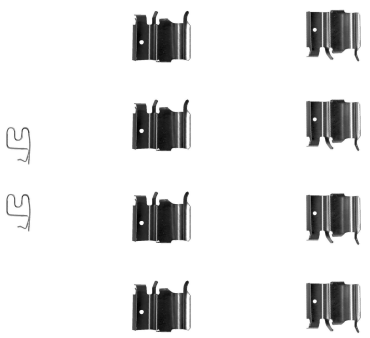

82060100

ALFA ROMEO, AUDI, BMW, CHEVROLET, FIAT, HOLDEN, HSV, KIA, LANCIA, MINI, OPEL, VAUXHALL



82060200

CHRYSLER, DODGE, HOLDEN, JEEP, OPEL, VAUXHALL



82060300

MERCEDES-BENZ

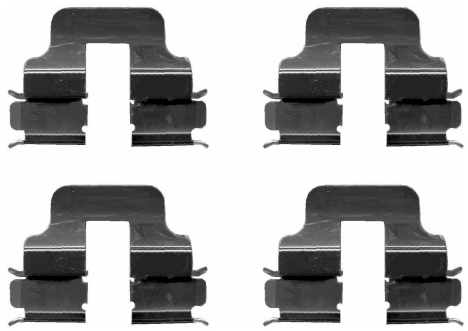

82060400

LAND ROVER

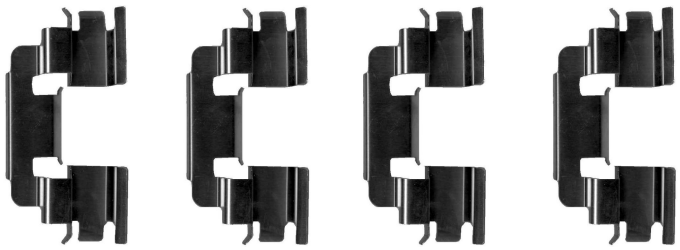

82060600

HONDA



82060700

HONDA, ROVER

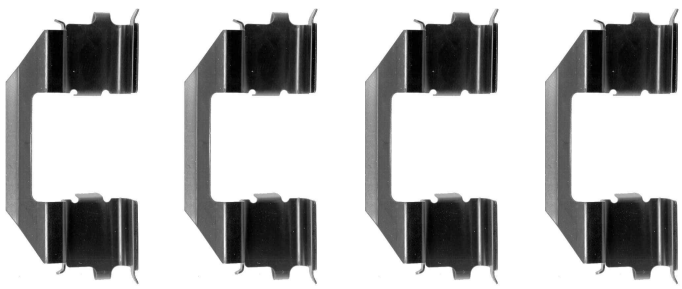

82060800

SUBARU



82060900

NISSAN

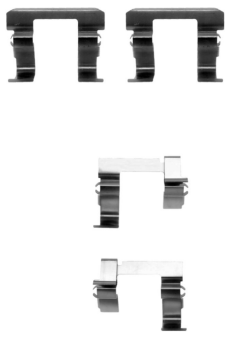

82061000

TOYOTA

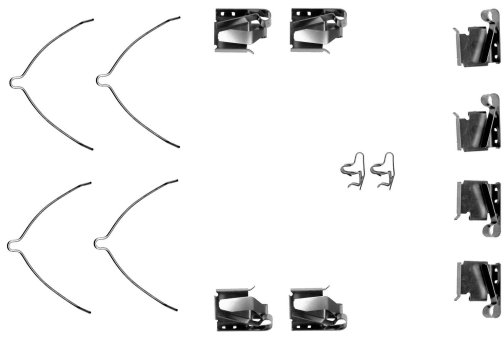

82061100

HONDA, MG, ROVER, TATA (TELCO)

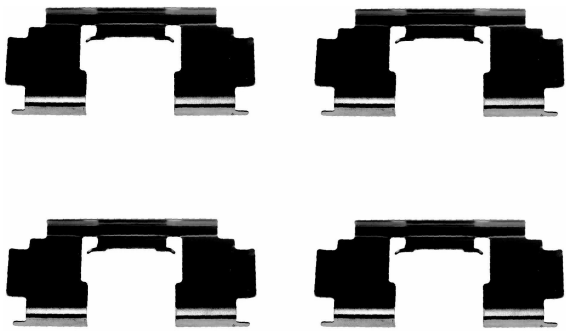

82061200

HONDA, MG, NISSAN

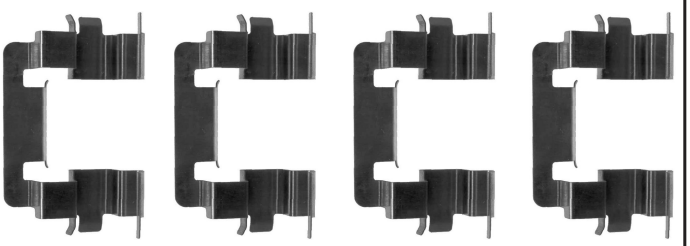

82061300

HONDA

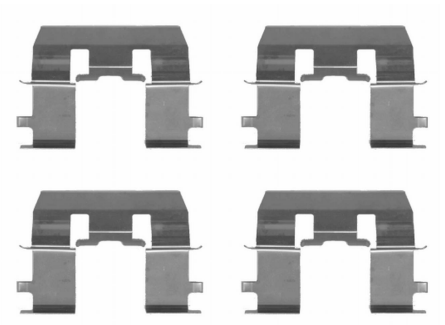

82061400

MERCEDES-BENZ, PUCH, VOLKSWAGEN

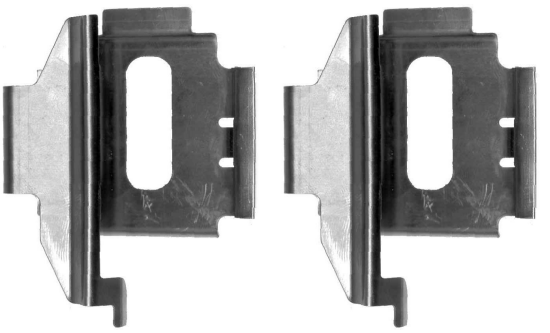

82061500

CHEVROLET, DAEWOO, PONTIAC



82061600

ALFA ROMEO

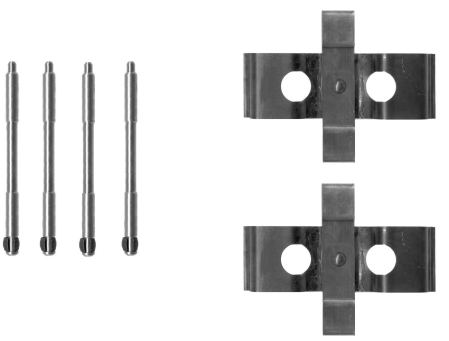

82061700

CITROËN, FIAT, IVECO, PEUGEOT

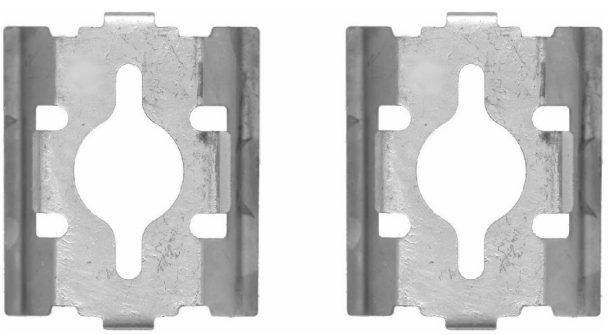

82061800

MERCEDES-BENZ



82062000

MAZDA, SUZUKI

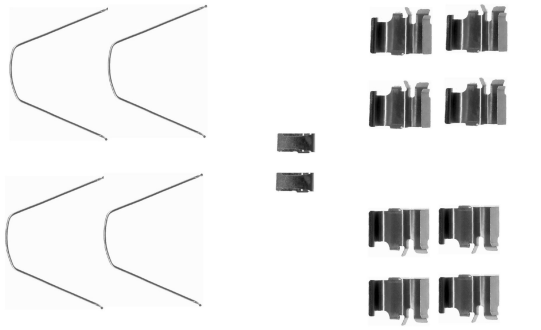

82062700

CITROËN, FIAT, LANCIA, PEUGEOT

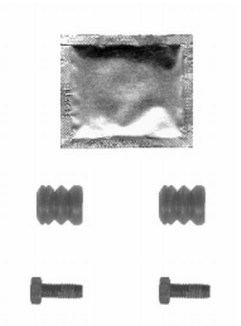

82062800

AC, ALFA ROMEO, AUDI, AUDI (FAW), CITROËN, CITROËN (DF-PSA), DACIA, FIAT, FORD, FORD AUSTRALIA, LADA, LANCIA, MERCEDES-BENZ, NISSAN, OPEL, PEUGEOT, RENAULT, SEAT, SKODA, SKODA (SVW), TVR, VAUXHALL, VOLKSWAGEN, VOLKSWAGEN (SVW), ZAZ

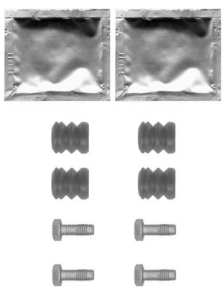

82062900

AC, ALFA ROMEO, ALPINA, AUDI, AUDI (FAW), BENTLEY, BMW, BMW (BRILLIANCE), CADILLAC, CHEVROLET, CHRYSLER, CITROËN, DAEWOO, DAIMLER, FIAT, FORD, FORD (CHANGAN), FORD AUSTRALIA, FORD USA, HOLDEN, HSV, JAGUAR, KIA, LANCIA, LAND ROVER, MAZDA, MAZDA (CHANGAN), MERCEDES-BENZ, MERCEDES-BENZ (BBDC), MERCURY, MG, MINI, NISSAN, OPEL, PEUGEOT, PUCH, RENAULT, ROEWE (SAIC), ROVER, SAAB, SEAT, SKODA, SKODA (SVW), TOYOTA, TVR, VAUXHALL, VOLKSWAGEN, VOLKSWAGEN (FAW), VOLKSWAGEN (SVW), VOLVO, VOLVO (CHANGAN), WIESMANN



82063000

ACURA, HONDA, MG, ROVER, TOYOTA



82063100

LAND ROVER, NISSAN

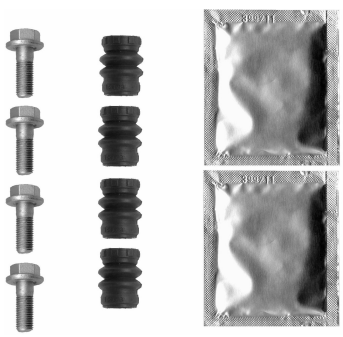

82063200

MAZDA

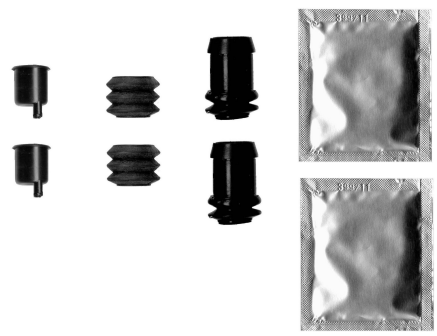

82063300

ALFA ROMEO, AUDI, AUDI (FAW), BMW, CHEVROLET, CITROËN, CITROËN (DF-PSA), FIAT, FORD, FORD (CHANGAN), FORD AUSTRALIA, HOLDEN, HONDA, HSV, LANCIA, LAND ROVER, MERCEDES-BENZ, MITSUBISHI, NISSAN, OPEL, PEUGEOT, PROTON, RENAULT, SEAT, SKODA, SKODA (SVW), SMART, SUZUKI, VAUXHALL, VOLKSWAGEN, VOLKSWAGEN (FAW), VOLKSWAGEN (SVW), VOLVO

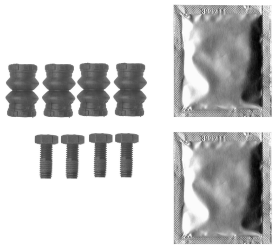

82063400

MAZDA

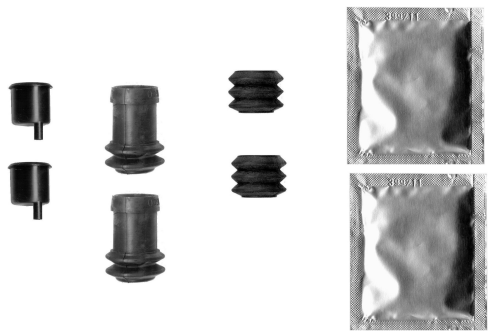

82063500

AUDI, AUDI (FAW), CITROËN, FIAT, FORD USA, JAGUAR, LANCIA, LINCOLN, MERCEDES-BENZ, MITSUBISHI, NISSAN, OPEL, PEUGEOT, RENAULT, SEAT, SKODA, SKODA (SVW), SMART, VAUXHALL, VOLKSWAGEN, VOLVO

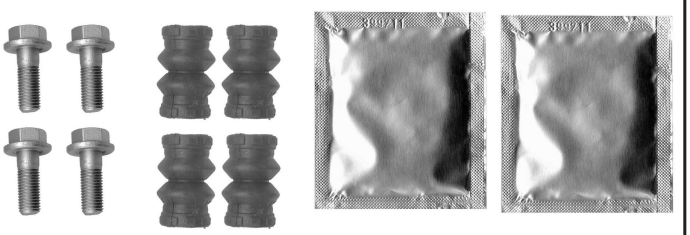

82063600

CITROËN, FIAT, LANCIA, PEUGEOT, ZASTAVA

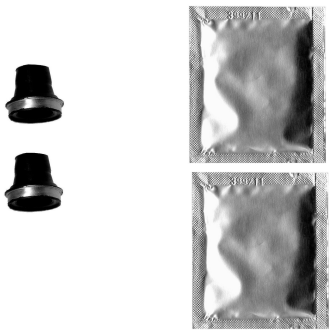

82063700

CHEVROLET, CITROËN, HOLDEN, NISSAN, OPEL, PEUGEOT, RENAULT, VAUXHALL

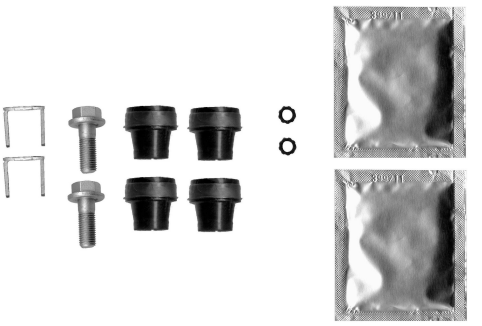

82063800

CITROËN, CITROËN (DF-PSA), FIAT, FORD, FORD AUSTRALIA, JAGUAR, MERCEDES-BENZ, MERCEDES-BENZ (BBDC), NISSAN, OPEL, PEUGEOT, RENAULT, SUZUKI, TOYOTA, VAUXHALL



82063900

FORD, FORD AUSTRALIA

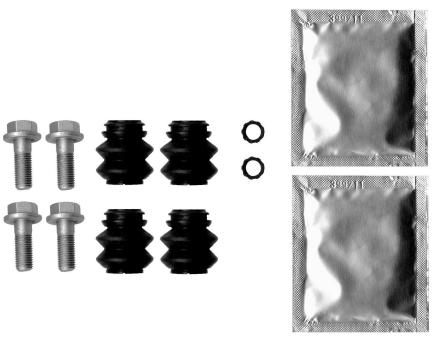

82071000

MERCEDES-BENZ, MERCEDES-BENZ (FJDA), VOLKSWAGEN

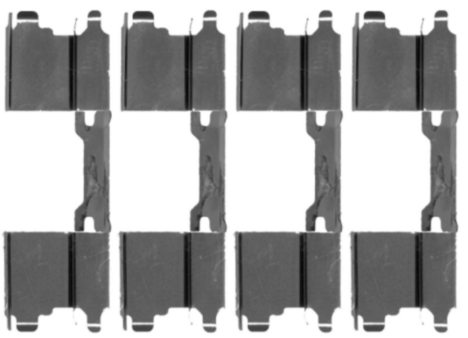

82071500

ALPINA, BMW, BMW (BRILLIANCE)



82071600

HYUNDAI, KIA, KIA (DYK)

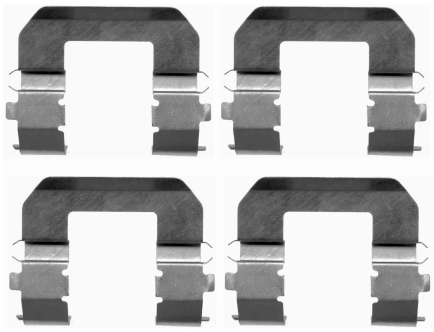

82071700

BMW

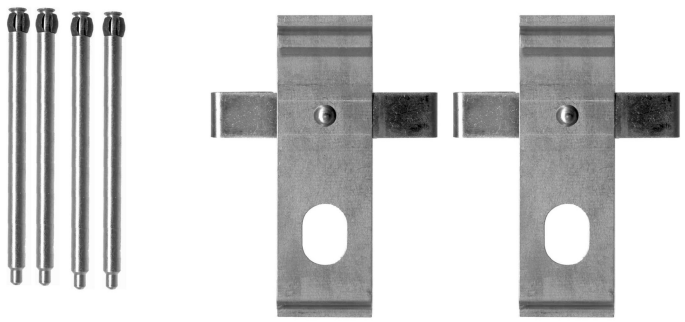

82071800

AUDI, FORD, OPEL, RENAULT, SAAB, SEAT, SKODA, VAUXHALL, VOLKSWAGEN, VOLVO



82071900

BMW

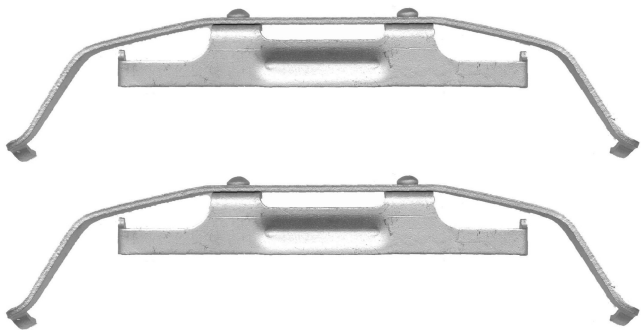

82072000

BMW, BMW (BRILLIANCE)

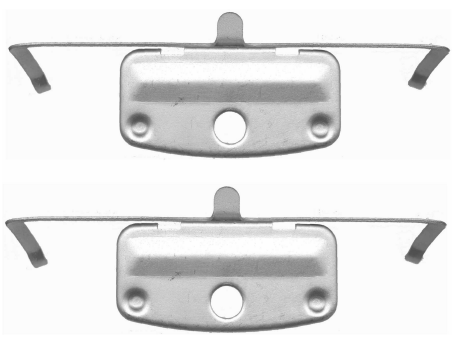

82072100

DAEWOO, HYUNDAI, KIA, SSANGYONG

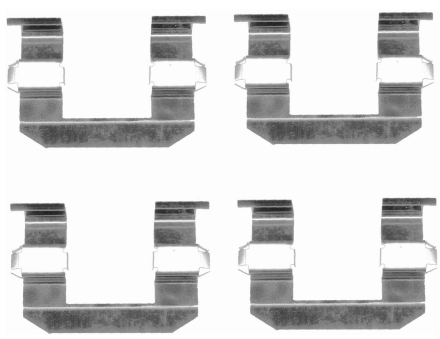

82072200

BMW, LANCIA, MERCEDES-BENZ, NISSAN, RENAULT

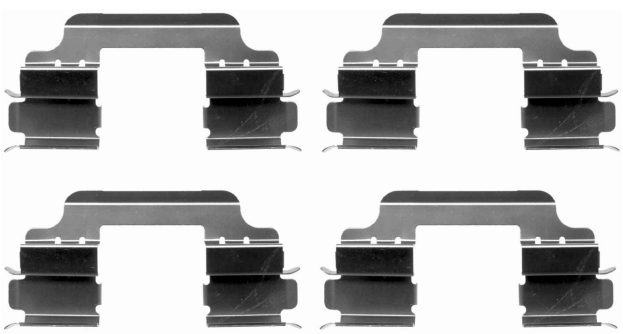

82072300

DAIHATSU, HYUNDAI, KIA, PERODUA, SSANGYONG

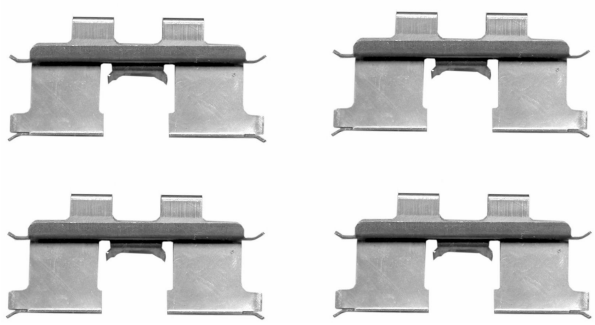

82072400

CITROËN, FIAT, LANCIA, OPEL, PEUGEOT, VAUXHALL

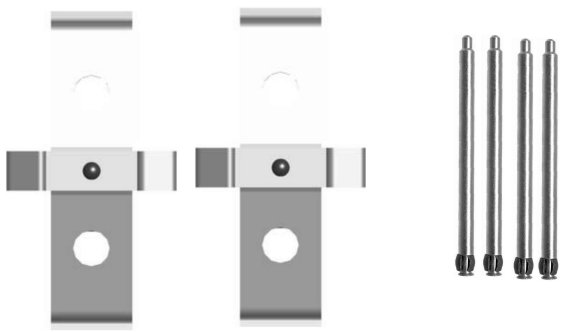

82072500

TOYOTA

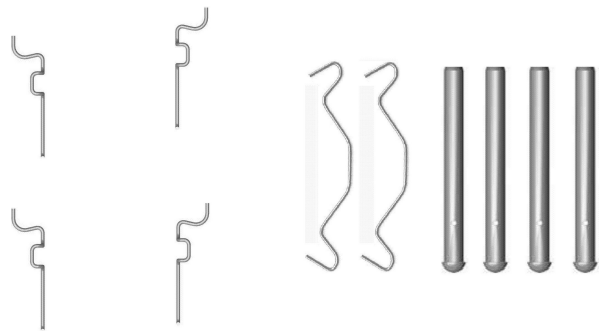

82072600

KIA

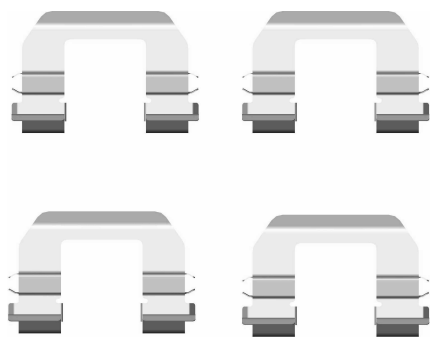

82072700

BMW

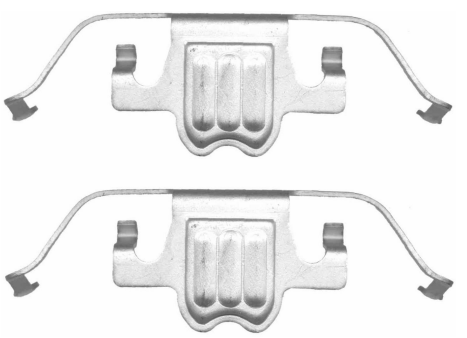

82072800

BMW

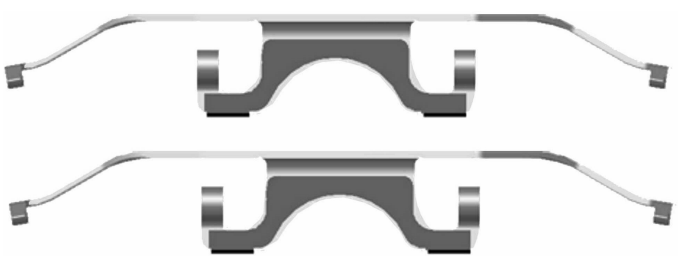

82072900

CITROËN

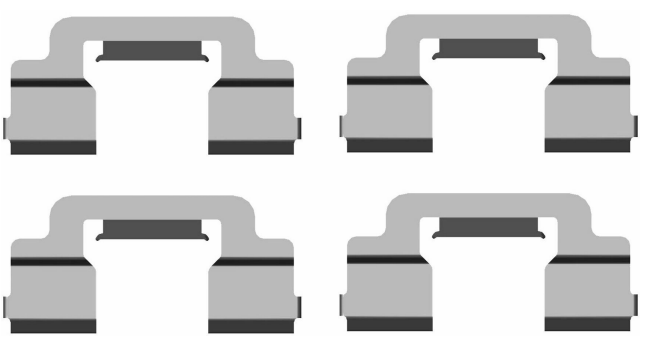

82073000

HYUNDAI, HYUNDAI (BEIJING), KIA

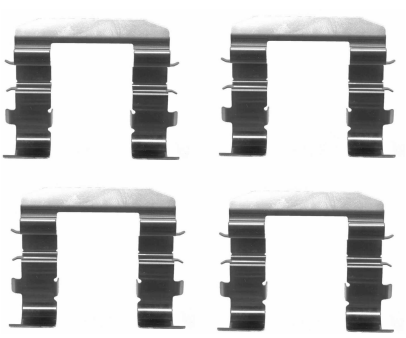

82073100

HYUNDAI, KIA

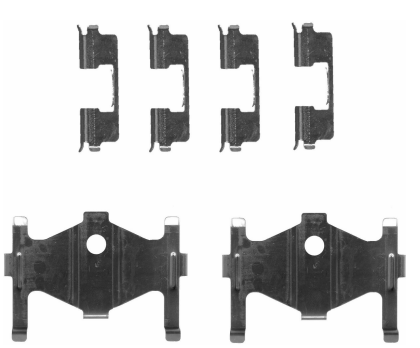

82073200

FORD, FORD (CHANGAN), FORD AUSTRALIA

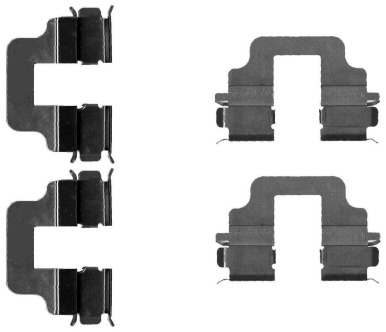

82073300

CITROËN, FIAT, MERCEDES-BENZ, MERCEDES-BENZ (BBDC), PEUGEOT, TOYOTA

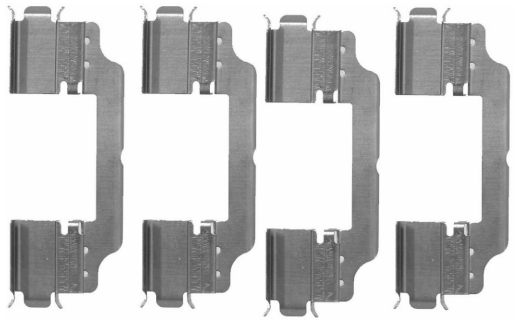

82073400

CITROËN, FIAT, PEUGEOT

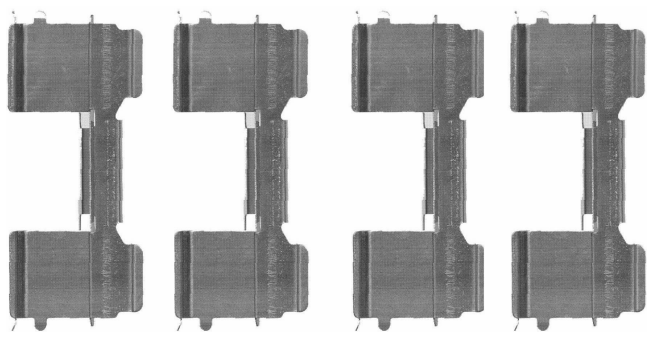

82073500

LAND ROVER

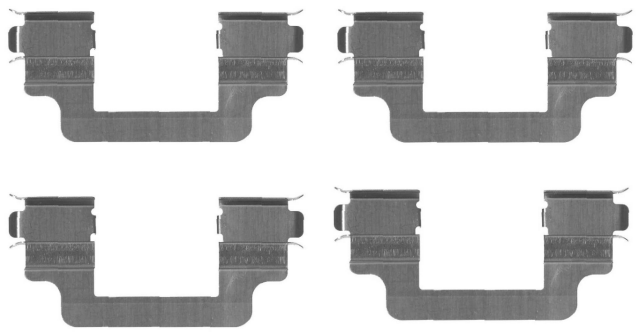

82073600

LAND ROVER

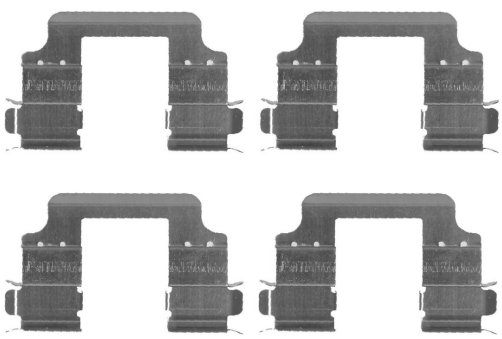

82073700

CITROËN, FIAT, PEUGEOT

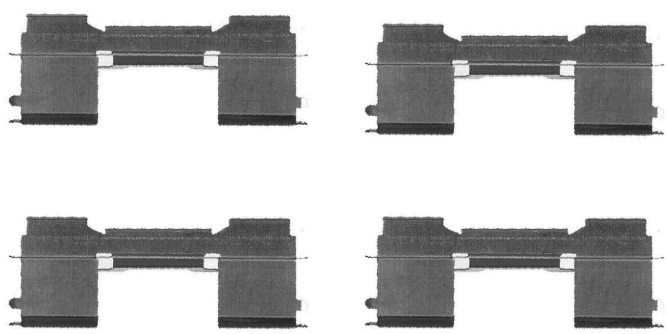

82073800

FORD, FORD (CHANGAN), LAND ROVER, VOLVO, VOLVO (CHANGAN)

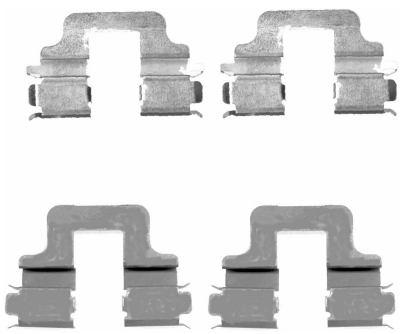

82073900

CITROËN, FIAT, PEUGEOT, TOYOTA

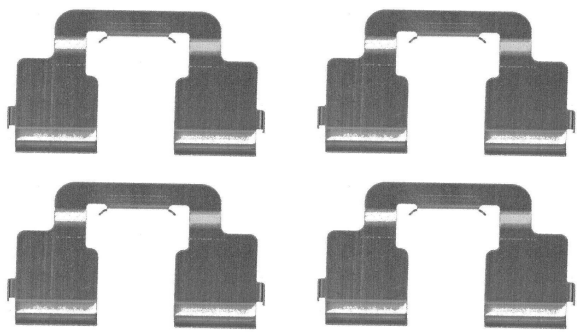

82074000

HYUNDAI, HYUNDAI (BEIJING), KIA

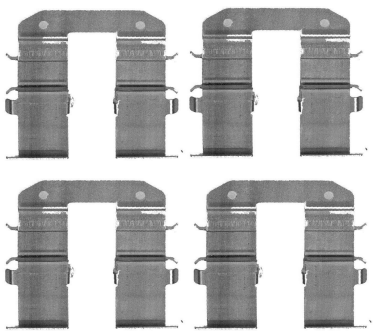

82074100

HYUNDAI, KIA, LAND ROVER, VOLVO, VOLVO (CHANGAN)

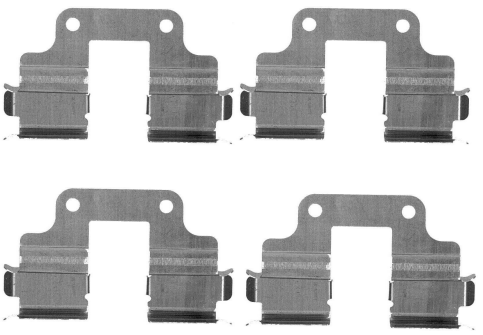

82074200

LAND ROVER

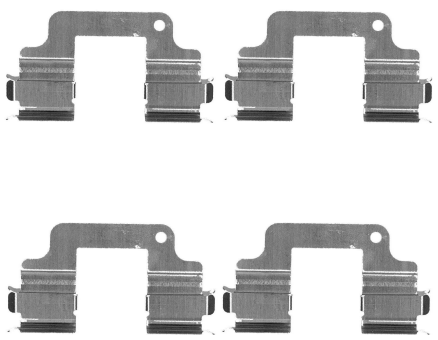

82074300

KIA

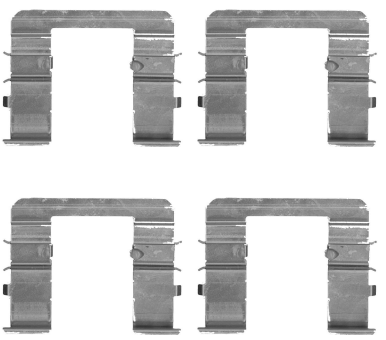

82074400

LEXUS, MAZDA, SUBARU, TOYOTA

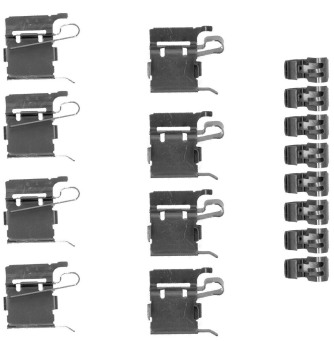

82074500

BMW, BMW (BRILLIANCE)

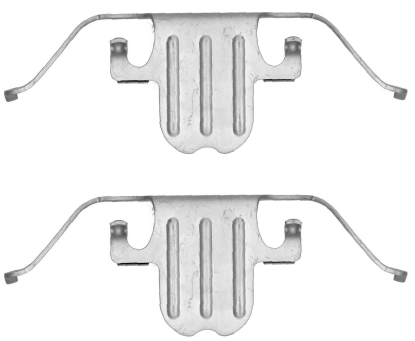

82074600

BMW

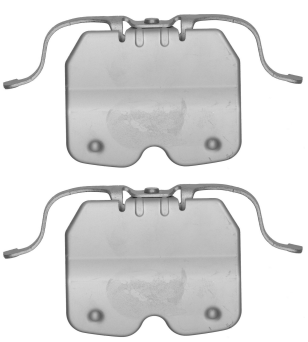

82074700

HYUNDAI, KIA, KIA (DYK), TOYOTA

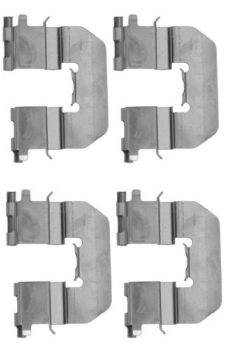

82074800

BMW

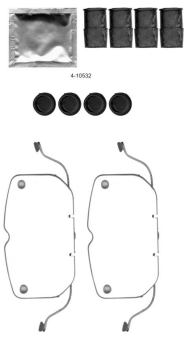

82074900

RENAULT

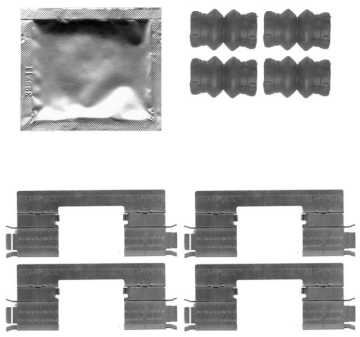

82075000

MERCEDES-BENZ, VOLKSWAGEN

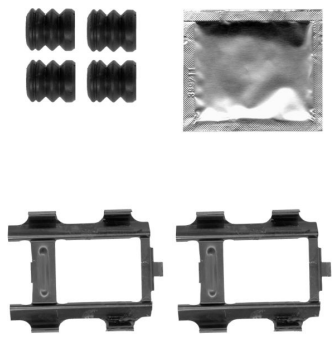

82075200

MERCEDES-BENZ, MERCEDES-BENZ (BBDC)

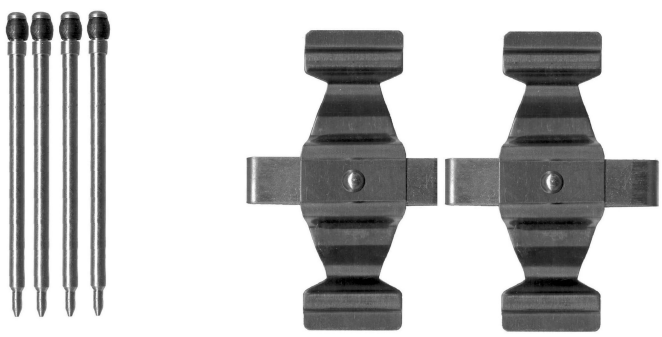

82075300

ASTON MARTIN, TOYOTA

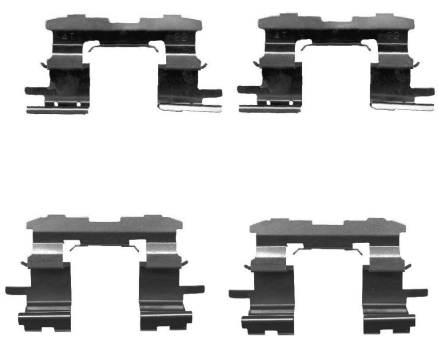

82075400

CITROËN, PEUGEOT

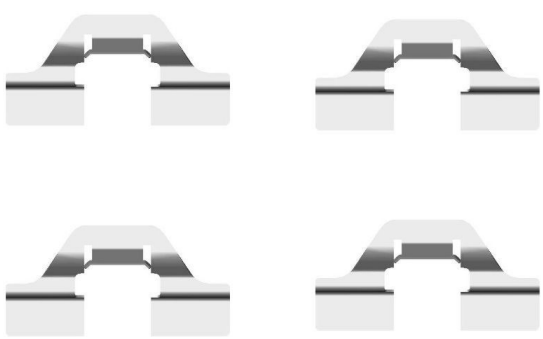

82075500

FIAT

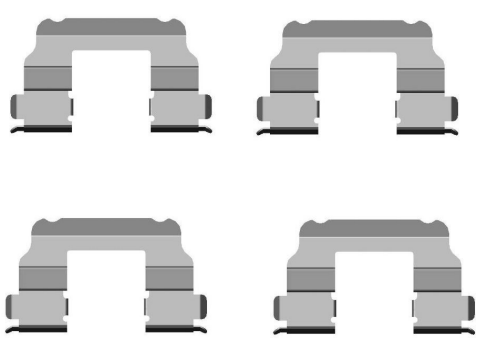

82075600

FIAT

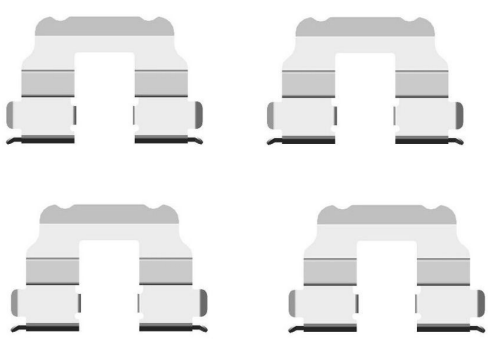

82075700

OPEL, SUZUKI, VAUXHALL

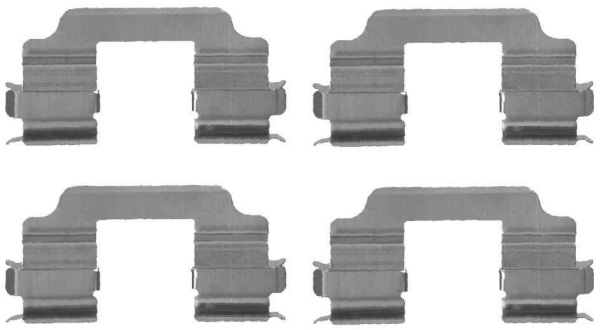

82075800

CITROËN, FIAT, PEUGEOT

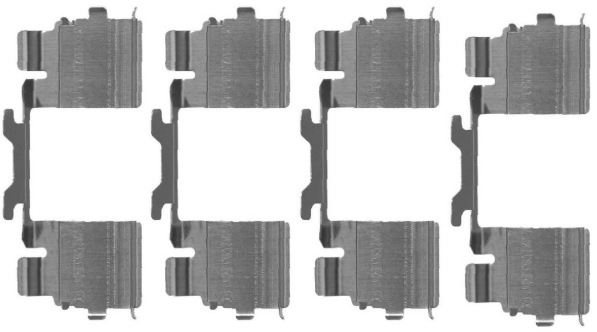

82075900

CITROËN, FIAT, PEUGEOT

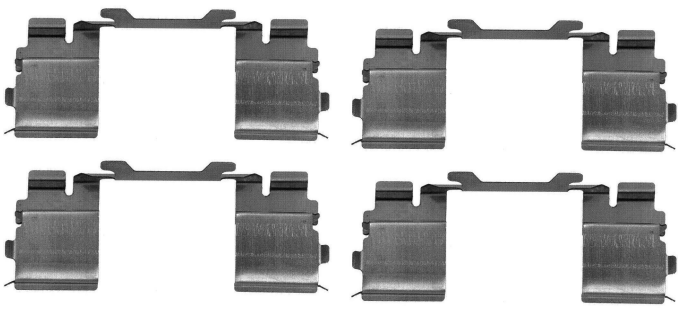

82076000

HYUNDAI, KIA



82076100

RENAULT

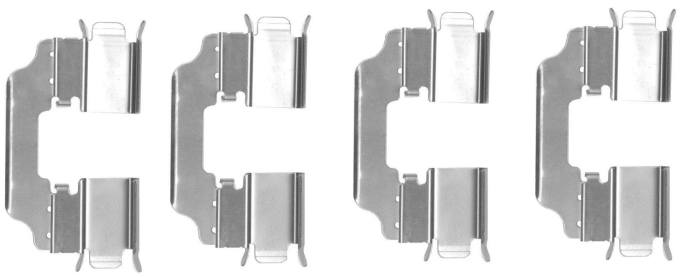

82076200

RENAULT

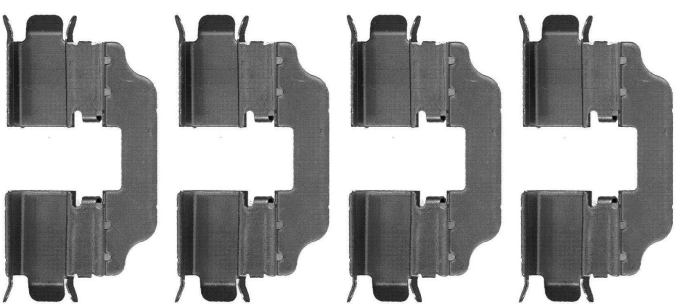

82076300

NISSAN, OPEL, RENAULT, VAUXHALL

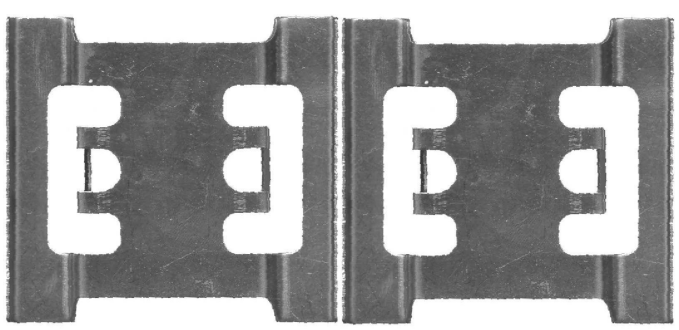

82076400

MERCEDES-BENZ, MERCEDES-BENZ (BBDC)



82076500

AUDI, PORSCHE, VOLKSWAGEN

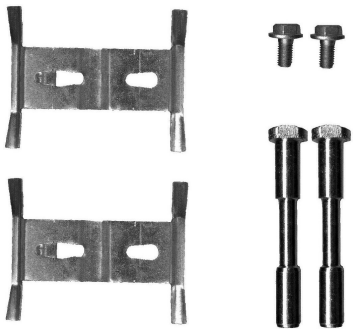

82076600

AUDI, PORSCHE, VOLKSWAGEN

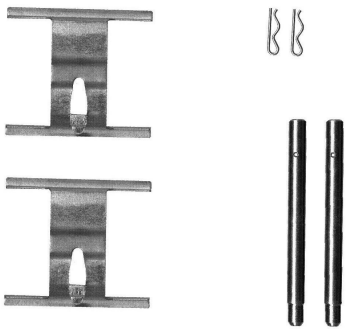

82076700

CHEVROLET, DAIHATSU, MITSUBISHI, SUZUKI

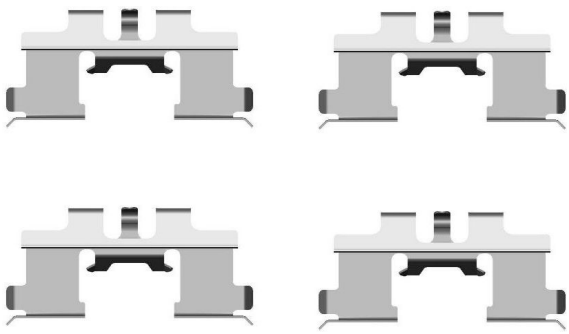

82076800

AUDI, AUDI (FAW), CITROËN, PEUGEOT, RENAULT, SEAT, SKODA, SKODA (SVW), VOLKSWAGEN, VOLKSWAGEN (FAW), VOLKSWAGEN (SVW)

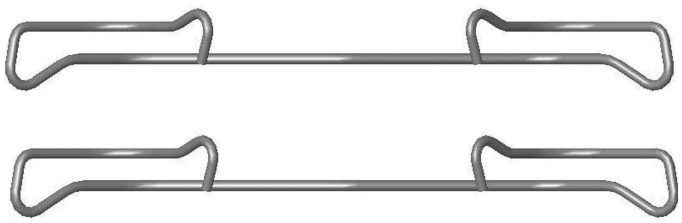

82076900

ALFA ROMEO, CHRYSLER, DODGE, FIAT, FIAT (GAC), LANCIA, OPEL, VAUXHALL, VOLKSWAGEN

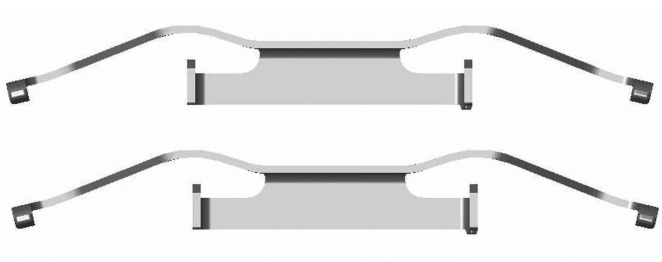

82077000

VOLKSWAGEN

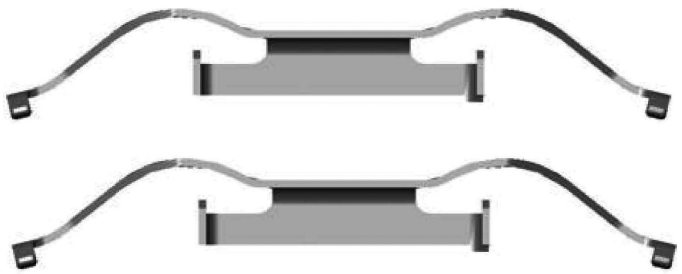

82077100

VOLKSWAGEN

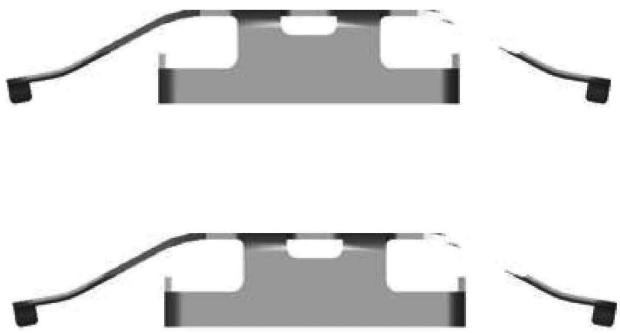

82077200

CHEVROLET, CHEVROLET (SGM), DAEWOO, HOLDEN, HYUNDAI, OPEL, PONTIAC, VAUXHALL



82077300

CHEVROLET, CHEVROLET (SGM), DAEWOO, HOLDEN, OPEL, PONTIAC, VAUXHALL

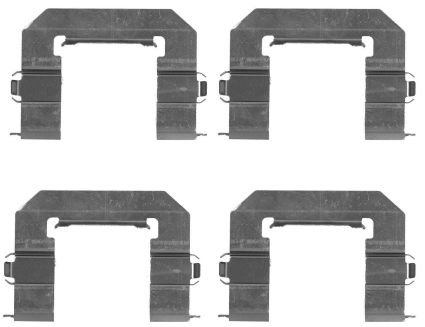

82077400

VOLKSWAGEN

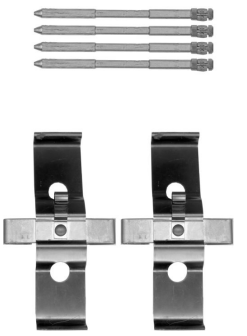

82077500

VOLKSWAGEN

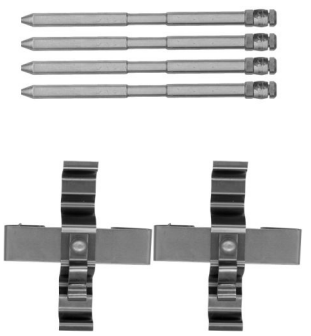

82500000

MERCEDES-BENZ

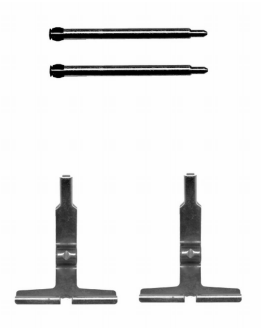

82500100

MAZDA

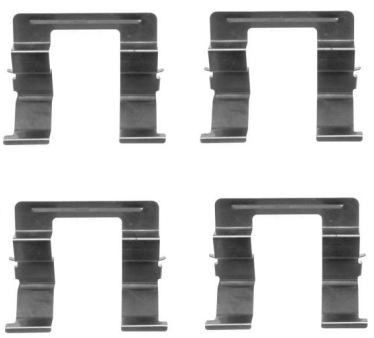

82500200

MERCEDES-BENZ

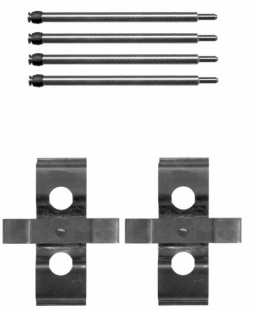

82500300

HYUNDAI

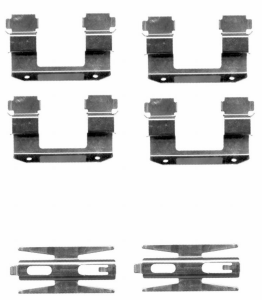

82500400

AUDI

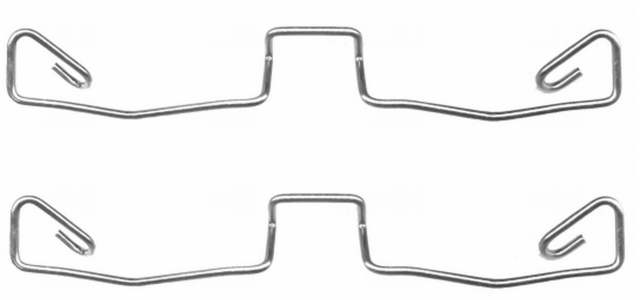

82500500

MERCEDES-BENZ



82500600

MERCEDES-BENZ

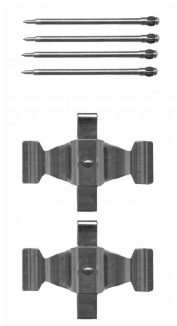

82500700

AUDI

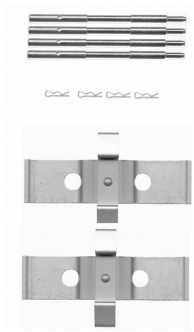

82500900

VOLVO

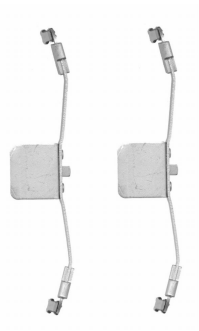

82501000

KIA

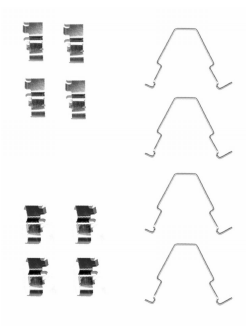

82501100

OPEL, PONTIAC

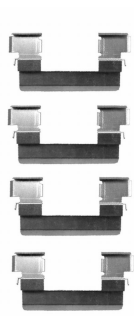

82501200

OPEL, SAAB, VAUXHALL

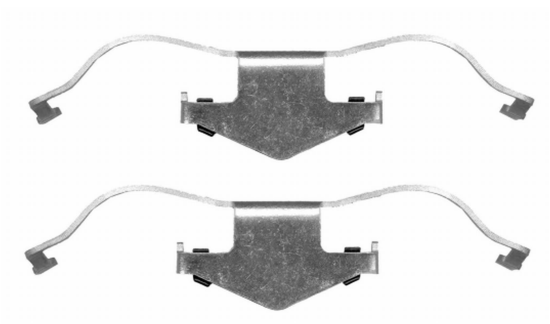

82501300

MERCEDES-BENZ



82501400

MERCEDES-BENZ, TOYOTA

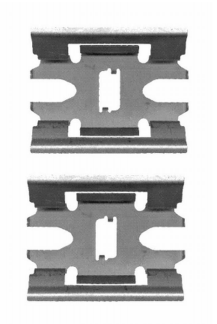

82501500

DODGE, HYUNDAI, INOKOM

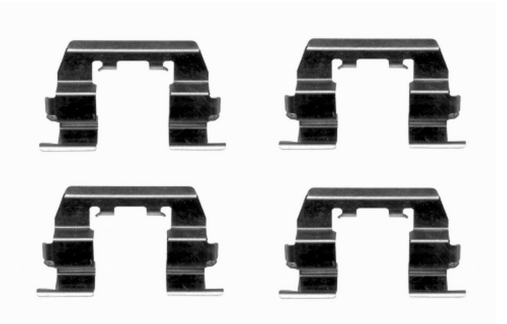

82501600

SUZUKI

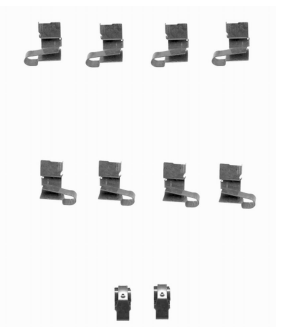

82501700

SUBARU

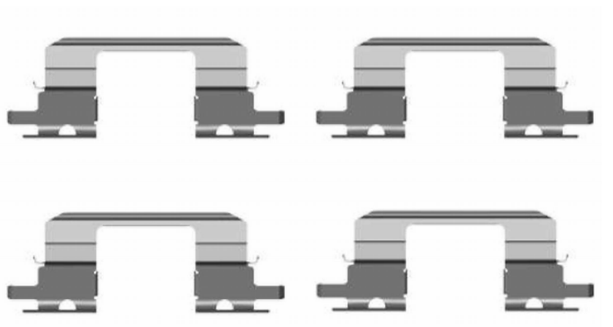

82501800

CITROËN, MITSUBISHI, MITSUBISHI (BJC), PEUGEOT



82501900

MERCEDES-BENZ

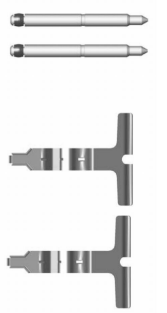

82502000

AUDI, SKODA, VOLKSWAGEN

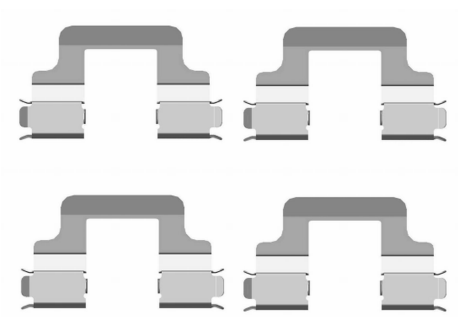

82502100

AUDI, SEAT, SKODA, VOLKSWAGEN

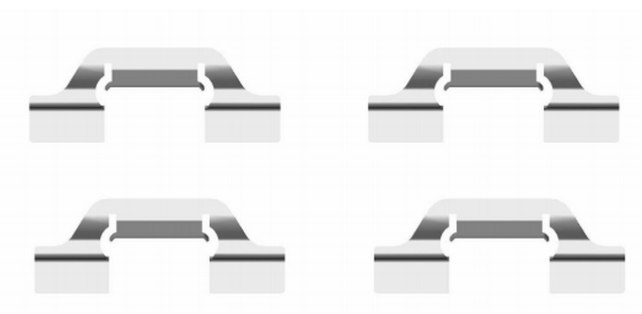

82502200

MERCEDES-BENZ

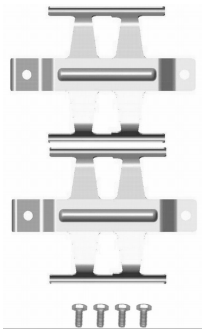

82502300

BUICK, CHEVROLET, DAEWOO, HOLDEN

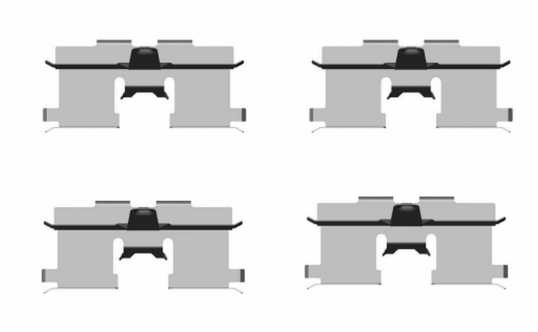

82502400

DODGE, KIA

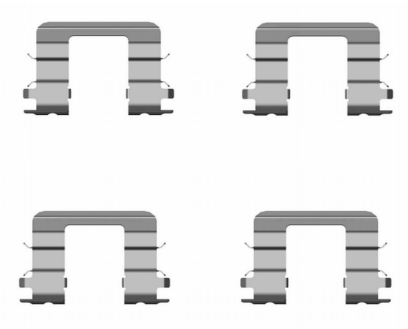

82502500

TOYOTA

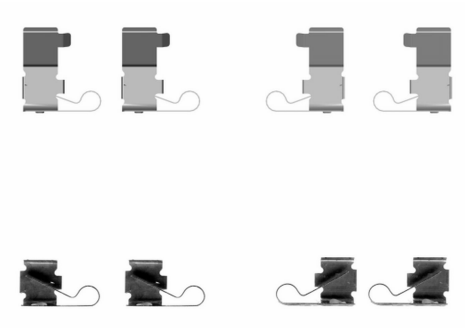

82502600

CHEVROLET, SUBARU

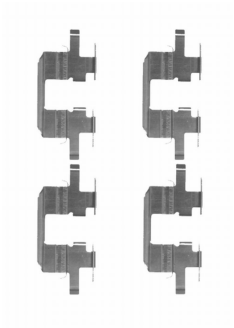

82502800

HYUNDAI, KIA

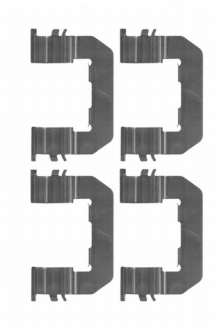

82502900

CHEVROLET, SUBARU, TOYOTA

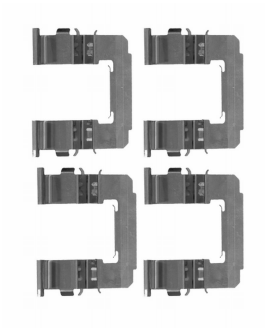

82503000

VOLKSWAGEN

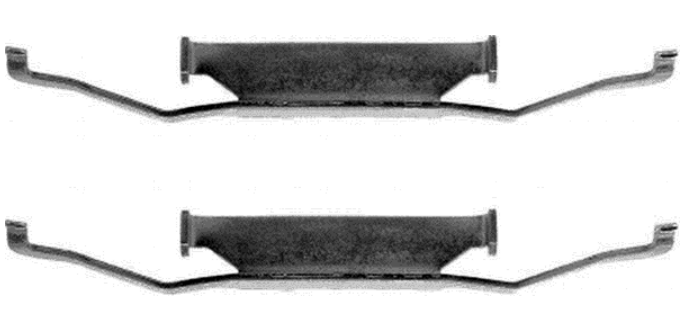

82503100

NISSAN, RENAULT

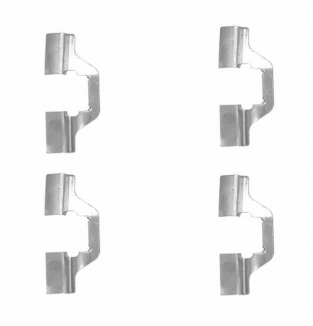

82503200

TOYOTA

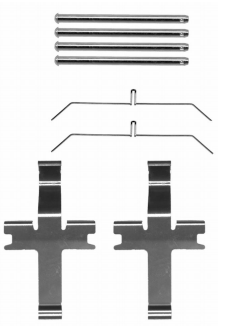

82503300

SUBARU, VOLKSWAGEN



82503400

HYUNDAI

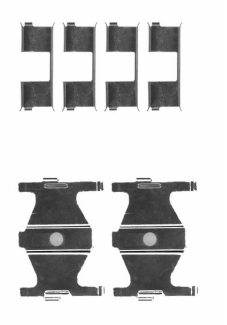

82503500

AUDI, CADILLAC, CHEVROLET, CITROËN, DAIHATSU, FORD, FORD AUSTRALIA, HOLDEN, JAGUAR, MAZDA, MAZDA (CHANGAN), MERCEDES-BENZ, MERCEDES-BENZ (BBDC), MINI, OPEL, PEUGEOT, RENAULT, SAAB, SEAT, TOYOTA, VAUXHALL, VOLKSWAGEN, VOLVO, VOLVO (CHANGAN)

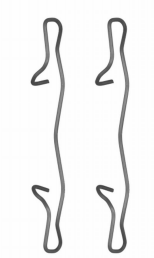

82503600

SUBARU

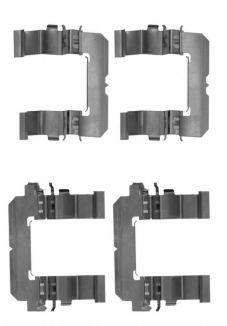

82503700

MERCEDES-BENZ

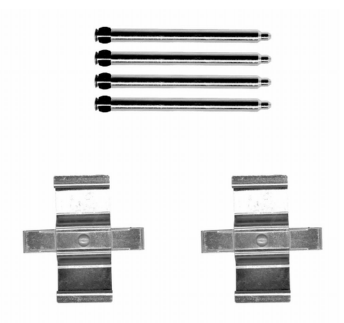

82503800

CHEVROLET, HOLDEN, OPEL, SAAB, VAUXHALL

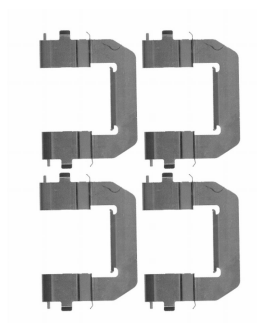

82503900

CHEVROLET, HOLDEN, OPEL, SAAB, VAUXHALL

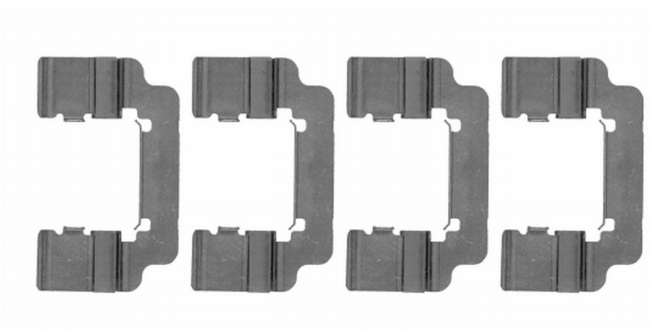

82504000

MERCEDES-BENZ

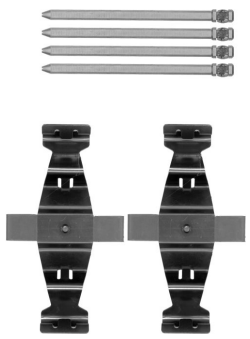

82504100

BMW, ROLLS-ROYCE



82504200

OPEL, SAAB, VAUXHALL

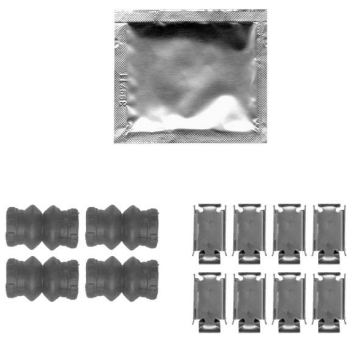

82504300

MERCEDES-BENZ

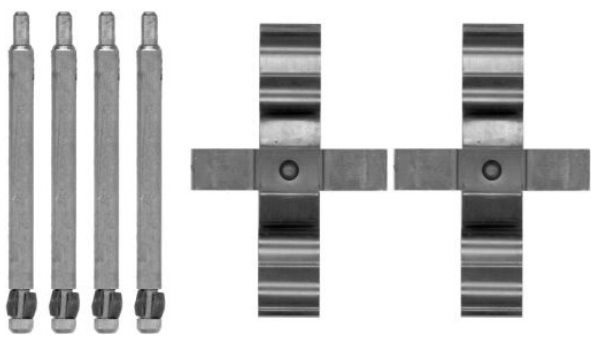

82504400

CITROËN, PEUGEOT

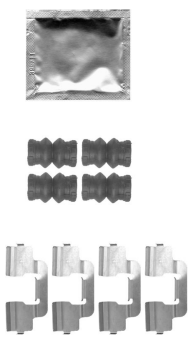

82504500

BMW

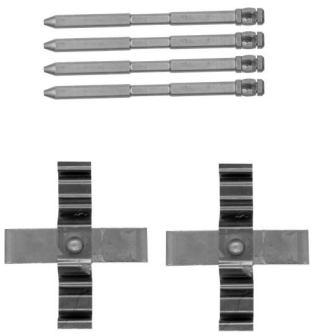

82504600

BMW



82504700

MERCEDES-BENZ

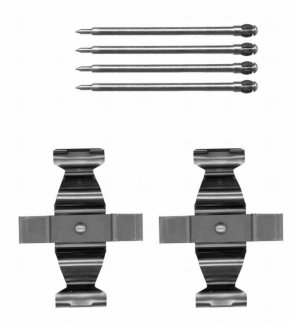

82504800

MAYBACH, MERCEDES-BENZ, MERCEDES-BENZ (BBDC)

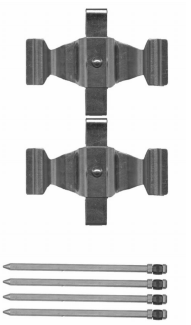

82504900

MERCEDES-BENZ

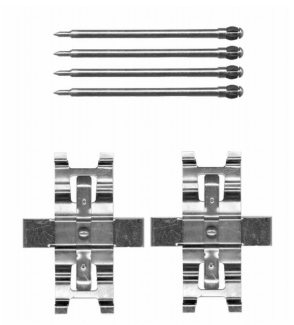

82505000

HONDA



82505100

HONDA

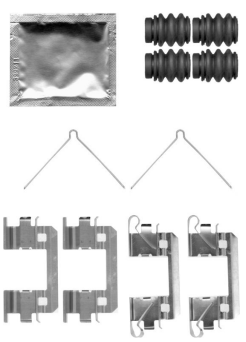

82505200

CHEVROLET, CHEVROLET (SGM), HOLDEN, OPEL, VAUXHALL

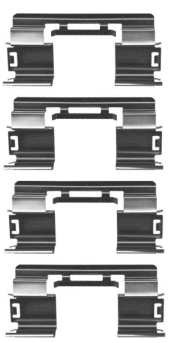

82505300

MAZDA, SUBARU

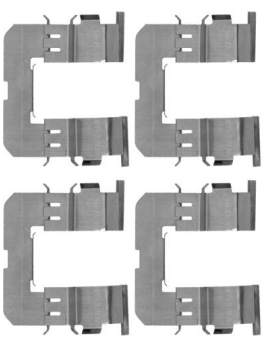

82505400

LAND ROVER

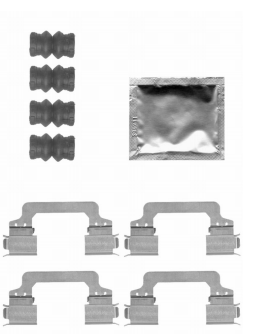

82505500

LAND ROVER

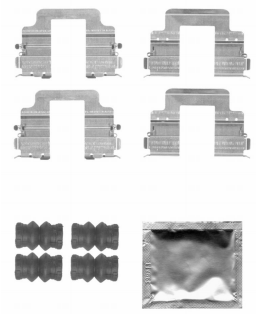

82505600

HYUNDAI

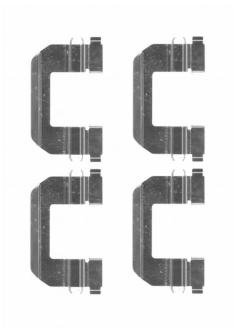

82505700

AUDI, VOLKSWAGEN

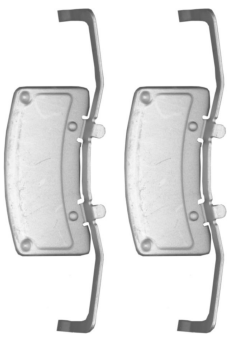

82505800

ALFA ROMEO, LANCIA

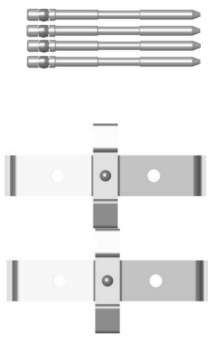

82505900

CITROËN, FIAT, NISSAN, PEUGEOT, RENAULT TRUCKS

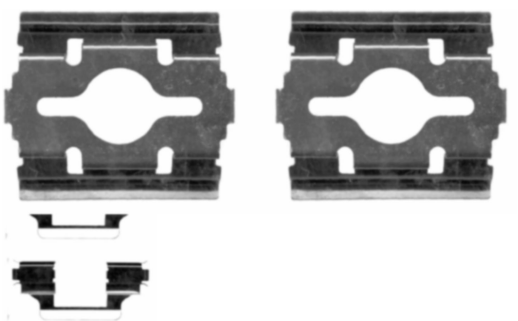

82506000

CITROËN, PEUGEOT

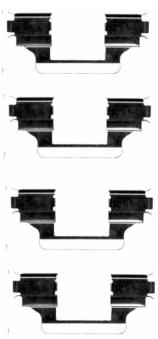

82506100

CITROËN, CITROËN (DF-PSA)



82506200

DAIHATSU

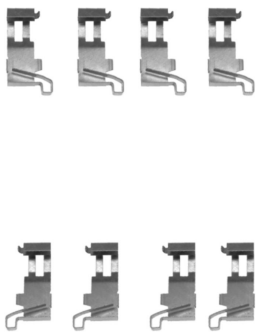

82506300

DAIHATSU, PERODUA

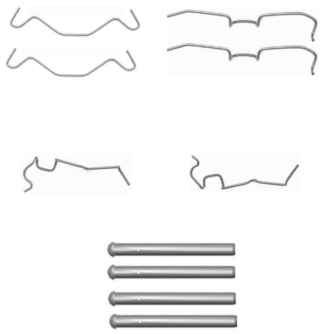

82506400

HONDA

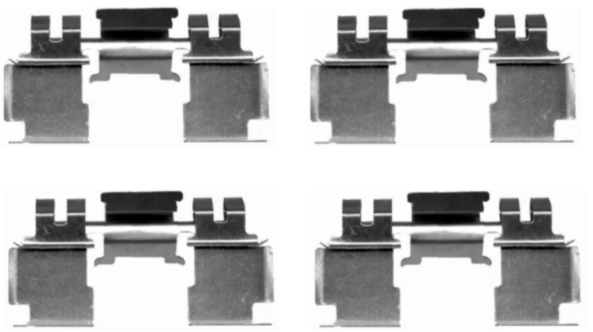

82506500

FIAT, HONDA, SUZUKI



82506600

HONDA

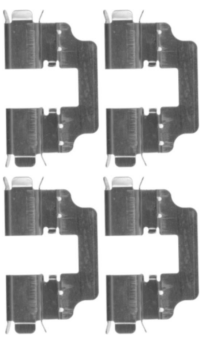

82506700

JAGUAR

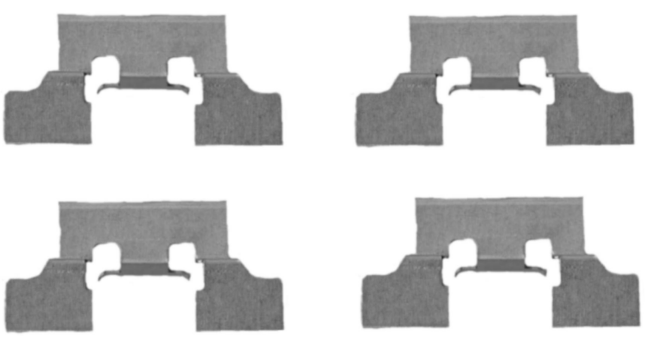

82506800

LAND ROVER

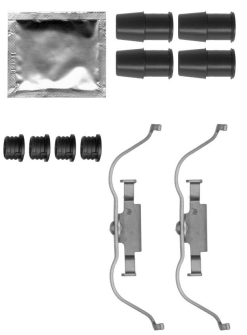

82506900

LAND ROVER

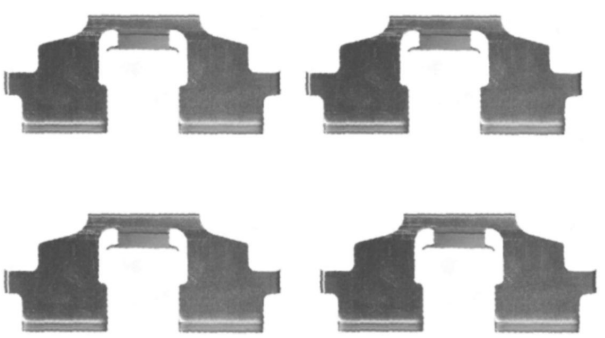

82507000

MAZDA

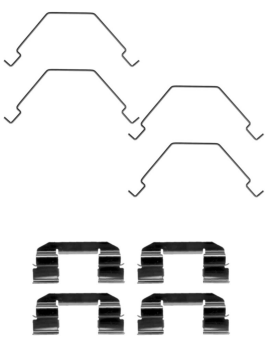

82507100

MAZDA

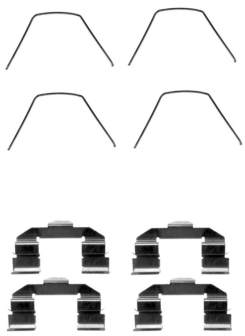

82507200

MAZDA



82507300

CITROËN, DODGE, JEEP, MITSUBISHI, MITSUBISHI (GAC), PEUGEOT



82507400

NISSAN

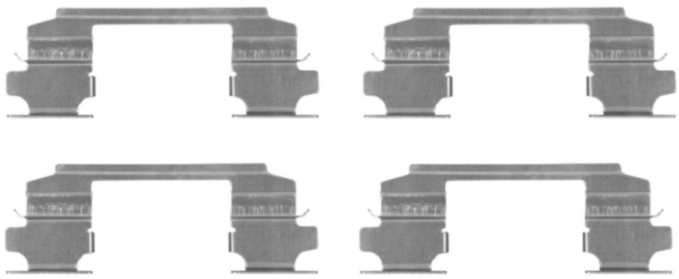

82507500

INFINITI, NISSAN, RENAULT, RENAULT SAMSUNG

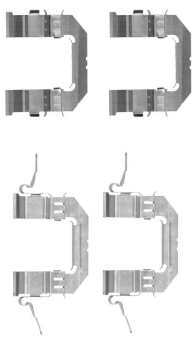

82507600

INFINITI, NISSAN, RENAULT, RENAULT SAMSUNG

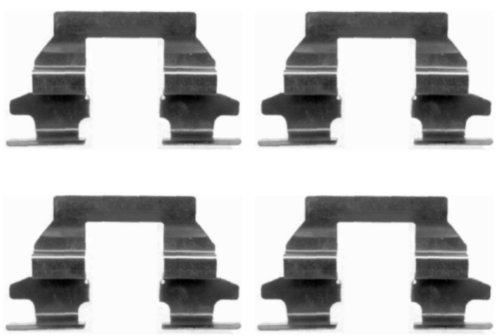

82507700

MAZDA, NISSAN

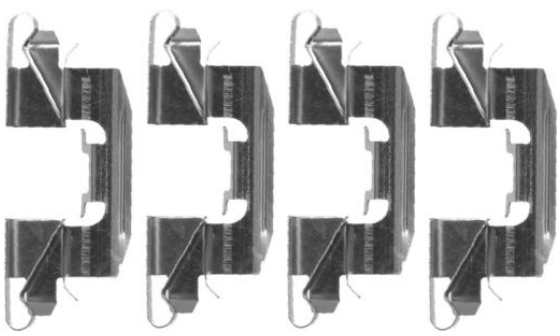

82507800

NISSAN, NISSAN (DONGFENG)

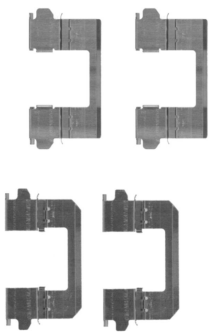

82507900

NISSAN

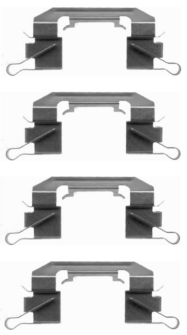

82508000

NISSAN, NISSAN (DONGFENG)

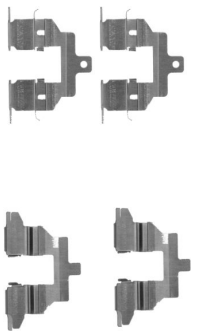

82508200

DACIA, LADA, RENAULT

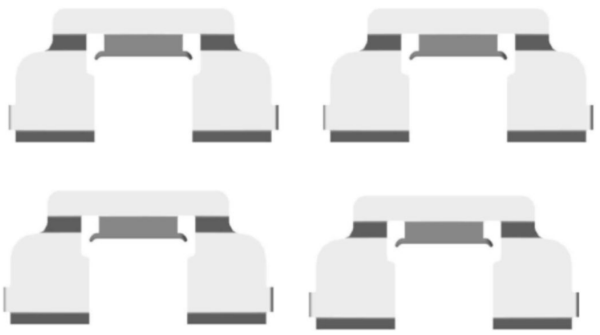

82508300

TOYOTA



82508400

BUICK, CHEVROLET, CHEVROLET (SGM), DAEWOO, HOLDEN

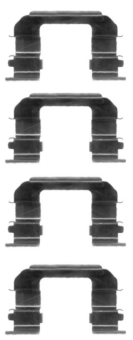

82508500

DODGE, HYUNDAI, KIA

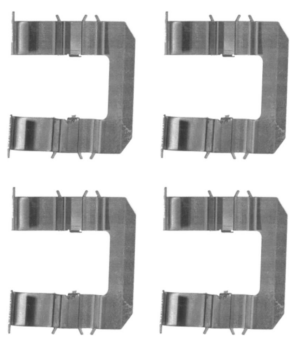

82508600

MERCEDES-BENZ, PUCH

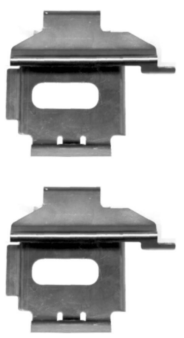

82508700

MERCEDES-BENZ

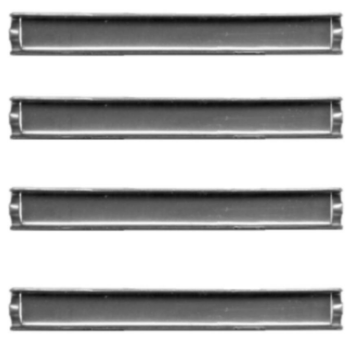

82508800

MERCEDES-BENZ

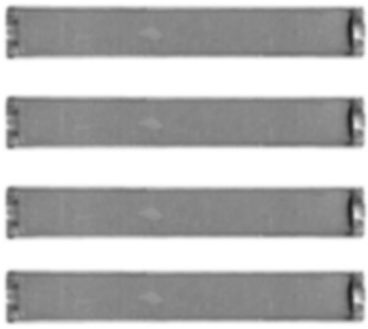

82508900

FORD, SEAT, VOLKSWAGEN



82509000

ALFA ROMEO, AUDI, AUDI (FAW), LANCIA, SEAT, SKODA, VOLKSWAGEN, VOLKSWAGEN (FAW), VOLKSWAGEN (SVW)

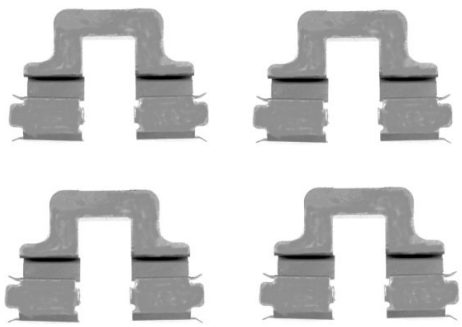

82509100

SUZUKI, SUZUKI (CHANGHE)



82509200

TOYOTA

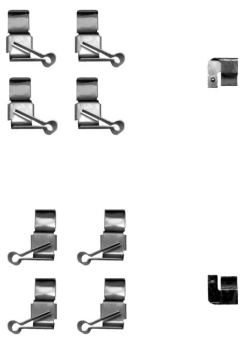

82509300

TOYOTA

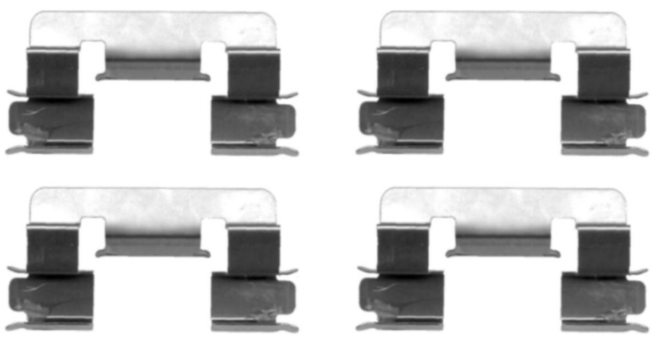

82509400

TOYOTA



82509500

TOYOTA

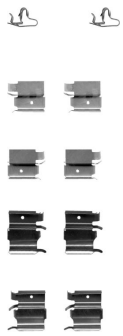

82509600

LEXUS, TOYOTA

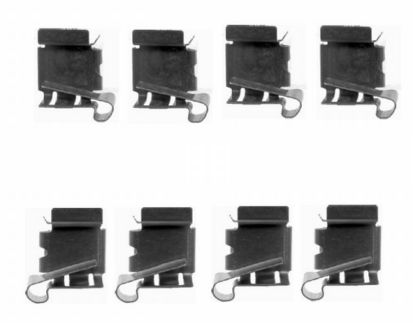

82509700

ASTON MARTIN, SUBARU, TOYOTA

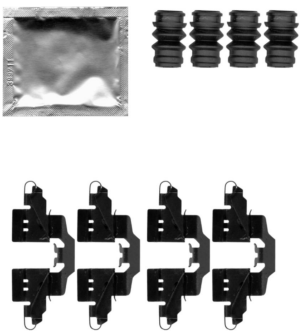

82509800

TOYOTA

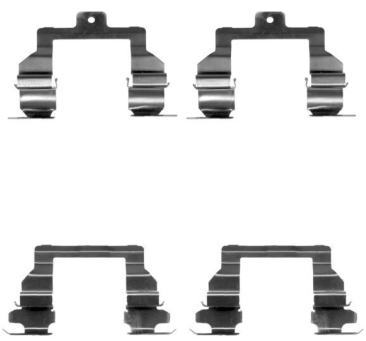

82509900

LEXUS, TOYOTA

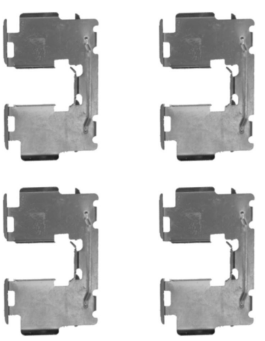

82510000

SUZUKI

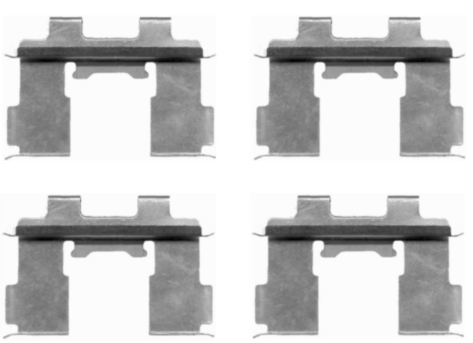

82510200

LEXUS, TOYOTA

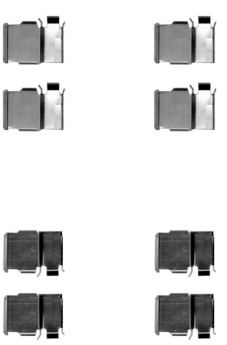

82510300

DAIHATSU, PERODUA

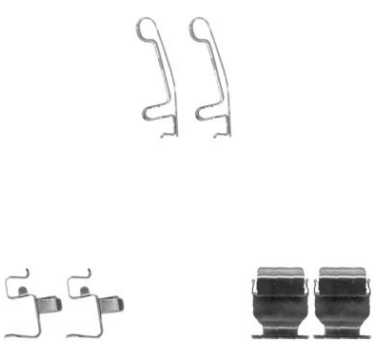

82510400

KIA

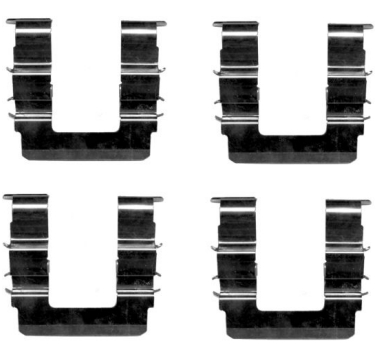

82510500

HONDA

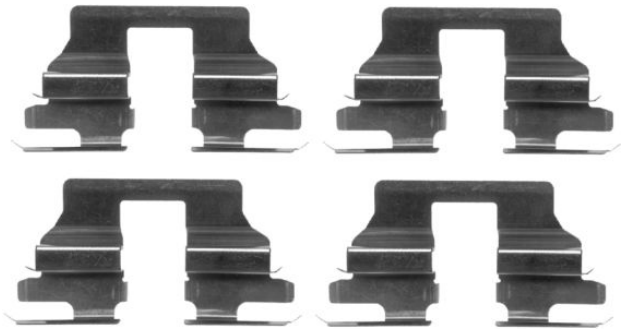

82510600

CITROËN

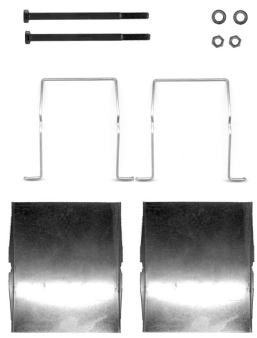

82510700

JAGUAR

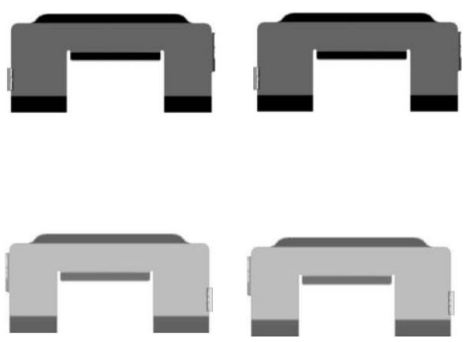

82510800

CHEVROLET, SUZUKI

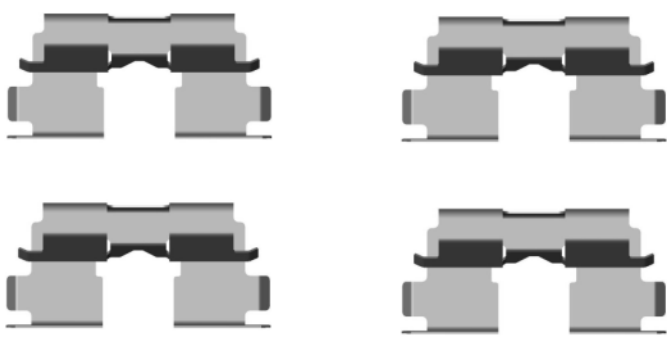

82510900

HYUNDAI, KIA



82511000

KIA

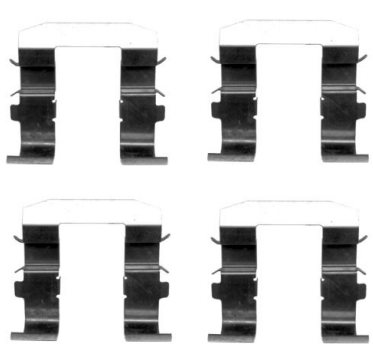

82511100

DODGE, HYUNDAI

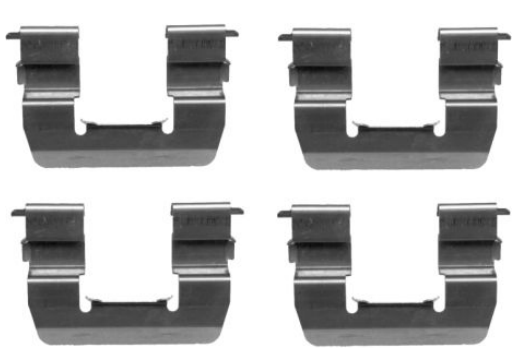

82511200

SUZUKI



82511300

KIA

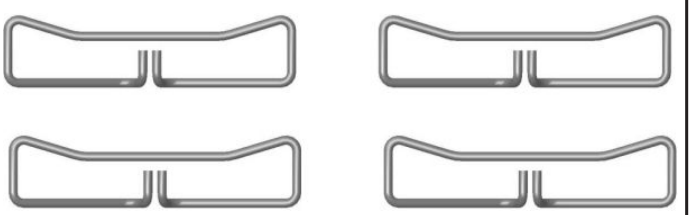

82511400

KIA

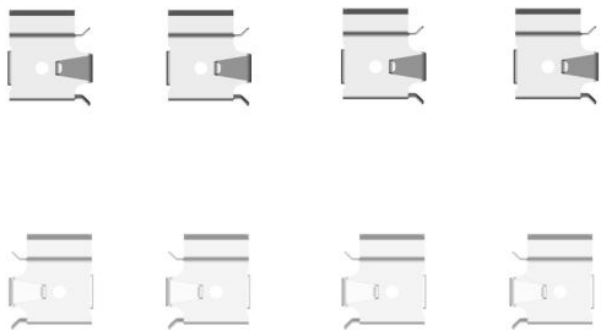

82511500

LEXUS, TOYOTA

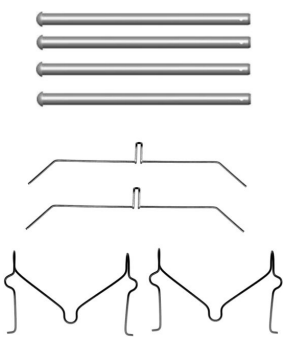

82511600

MITSUBISHI, PROTON

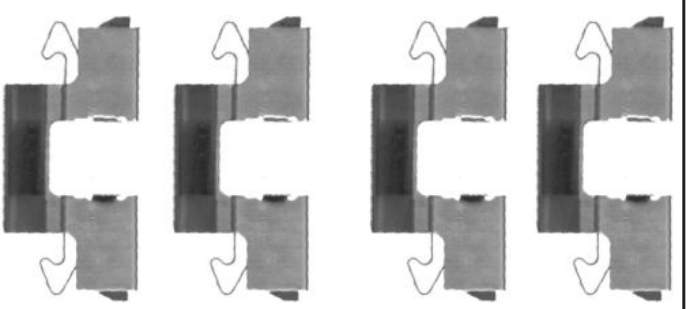

82511700

FORD, FORD ASIA / OZEANIA, FORD AUSTRALIA, MAZDA

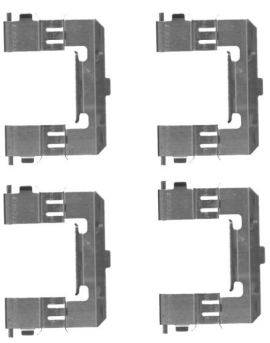

82511800

KIA

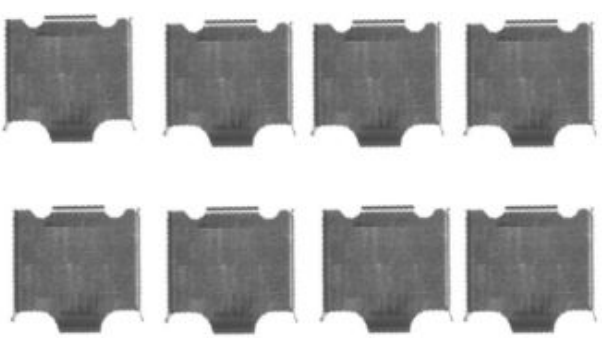

82511900

NISSAN

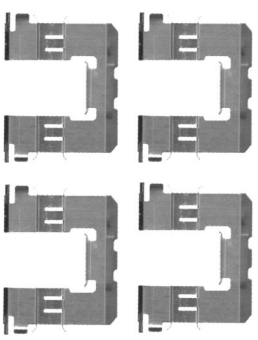

82512000

MAZDA

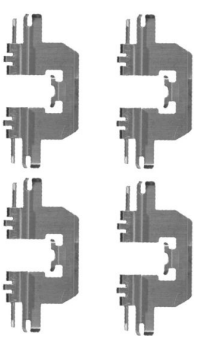

82512100

CHRYSLER, DODGE

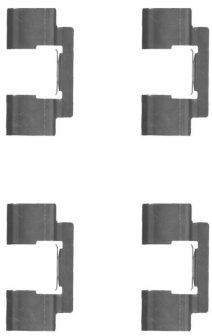

82512200

NISSAN

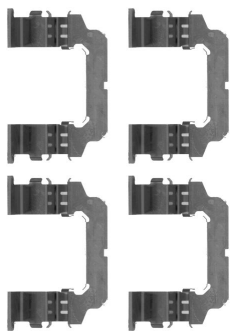

82512300

TOYOTA

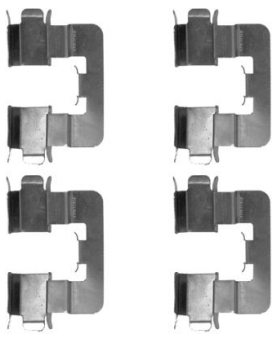

82512400

HONDA

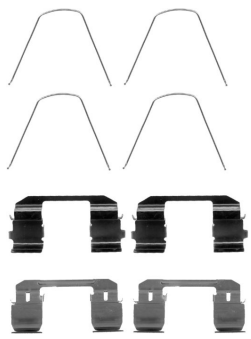

82512500

MG, ROVER

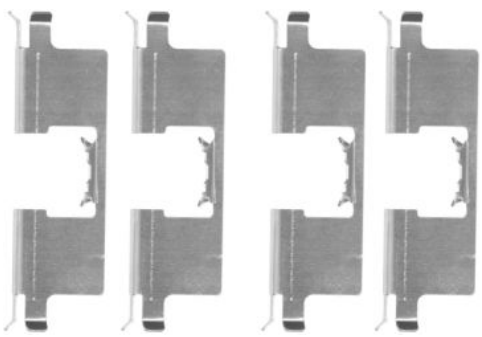

82512600

DODGE, KIA

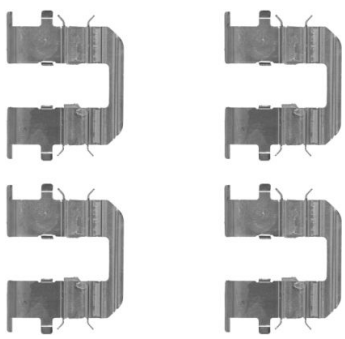

82512700

HYUNDAI

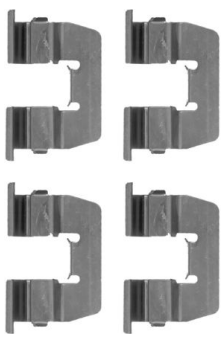

82512800

DAIMLER, JAGUAR

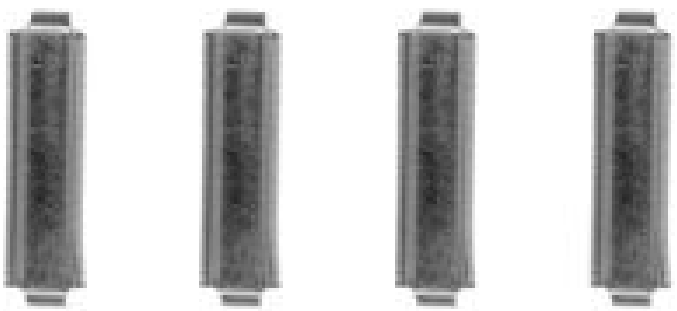

82512900

DAIHATSU, FORD, FORD AUSTRALIA, MAZDA, SUBARU, SUZUKI

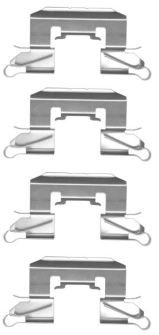

82513000

MERCEDES-BENZ, MERCEDES-BENZ (BBDC)

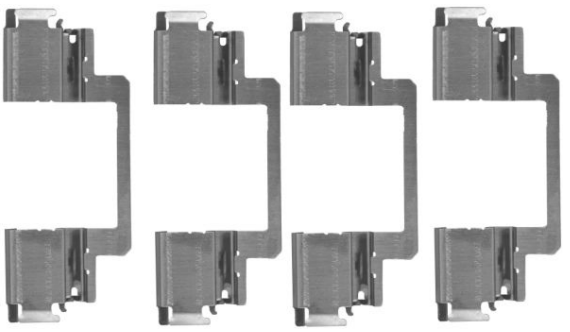

82513100

MAZDA

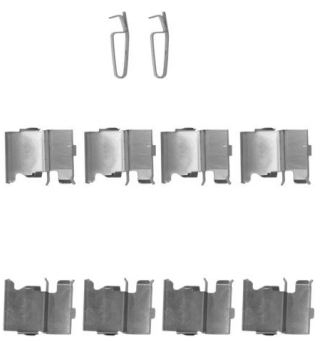

82513200

CHEVROLET, OPEL, PONTIAC

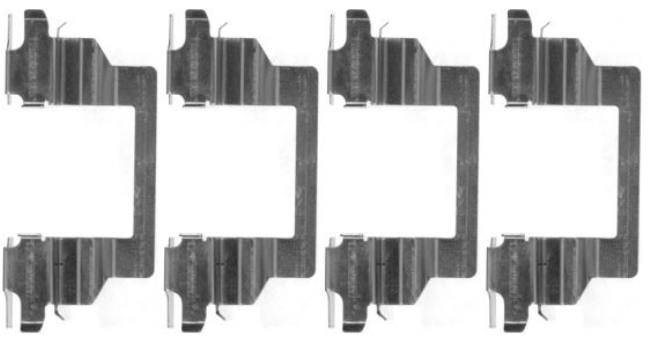

82513300

FIAT, LANCIA, PEUGEOT

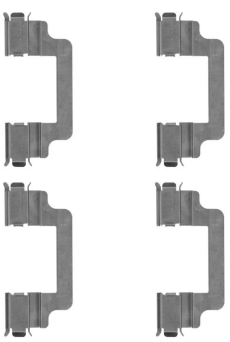

82513400

CHEVROLET, HOLDEN, OPEL, SAAB, VAUXHALL

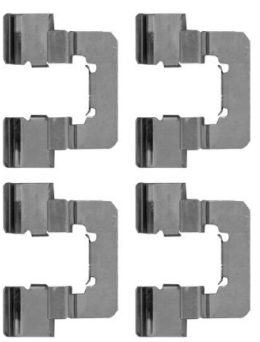

82513500

HYUNDAI

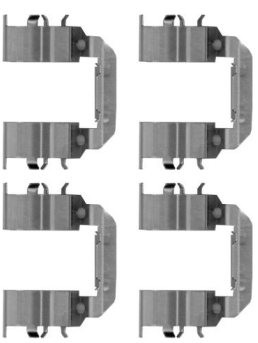

82513600

CHRYSLER, CHRYSLER (BBDC)

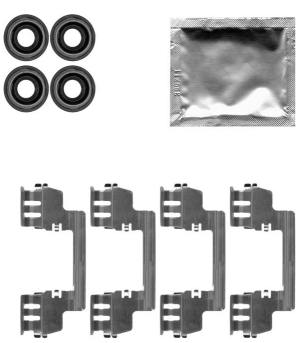

82513700

CHRYSLER, CHRYSLER (BBDC)

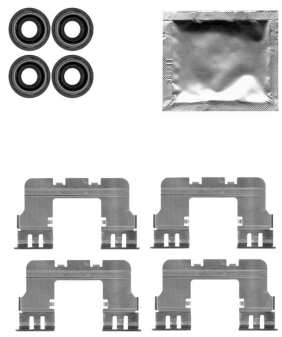

82513800

NISSAN

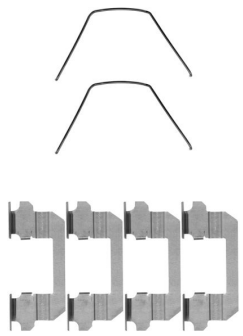

82514000

FIAT, MARUTI SUZUKI, NISSAN, SUZUKI

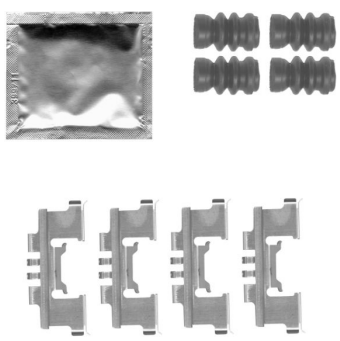

82514100

HYUNDAI

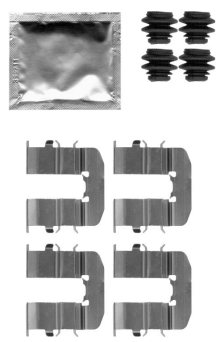

82514200

AUDI, AUDI (FAW)

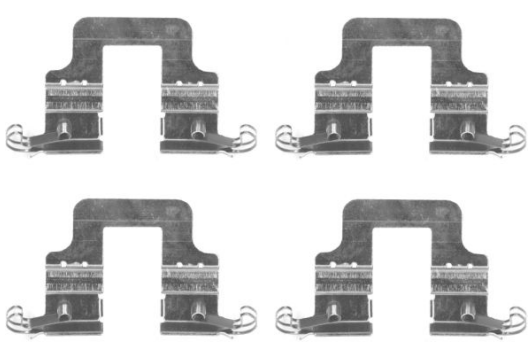

82514600

NISSAN

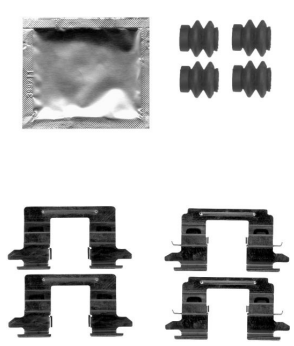

82514800

NISSAN

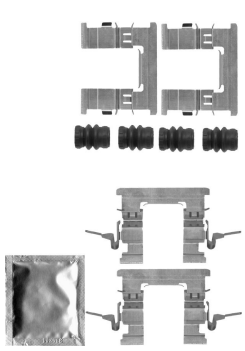

82515000

TOYOTA

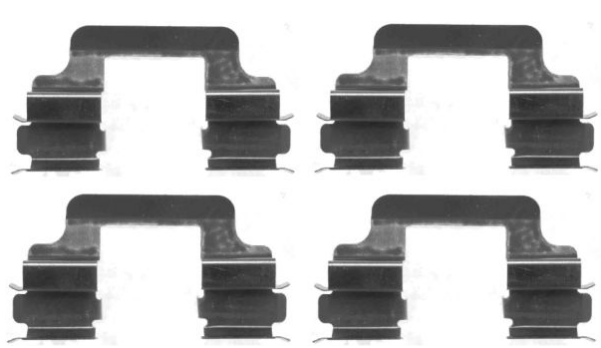

82515100

LEXUS, TOYOTA

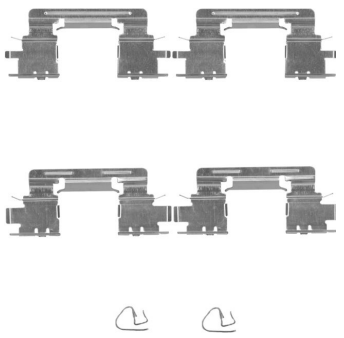

82515200

LEXUS, TOYOTA

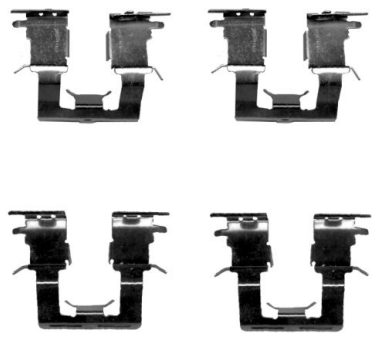

82515500

FORD, VOLVO, VOLVO (CHANGAN)

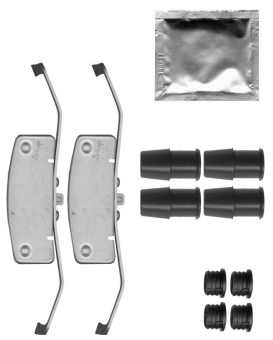

82515800

HYUNDAI, KIA

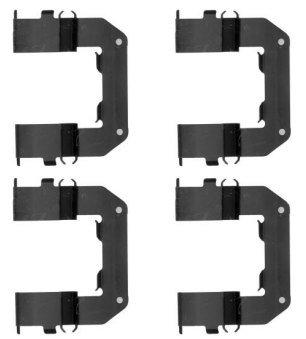

82516100

TOYOTA

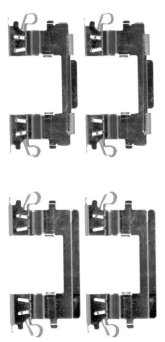

82516200

MITSUBISHI, NISSAN

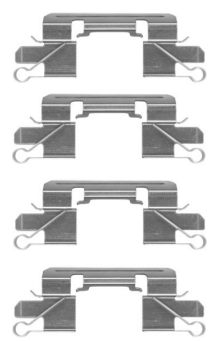

82516400

MAZDA

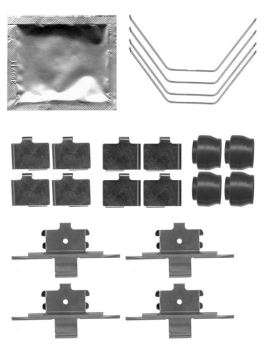

82516500

TOYOTA

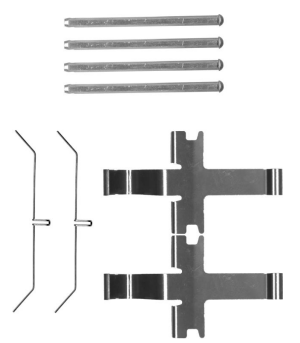

82516700

CHEVROLET, HOLDEN, OPEL, VAUXHALL

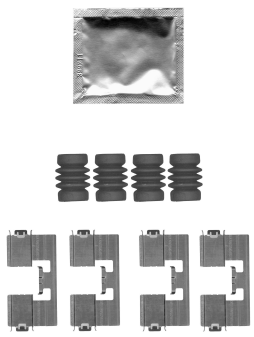

82516800

NISSAN

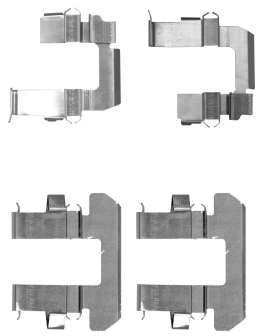

82517300

KIA

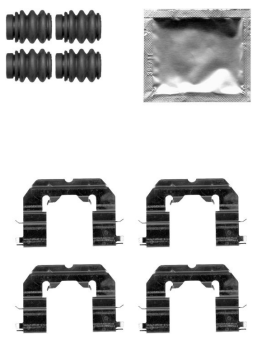

82517400

HYUNDAI, KIA

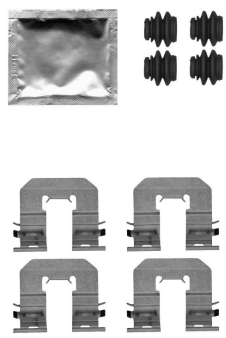

82517500

MITSUBISHI

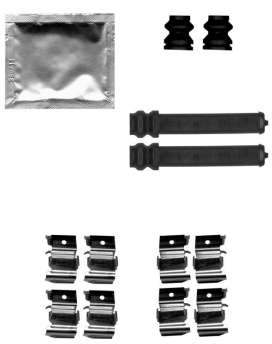

82517600

MINI



82517700

BMW

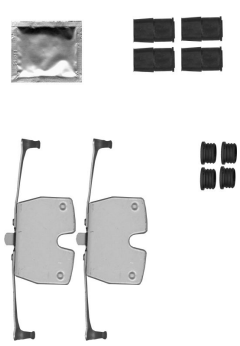

82517800

BMW, BMW (BRILLIANCE)

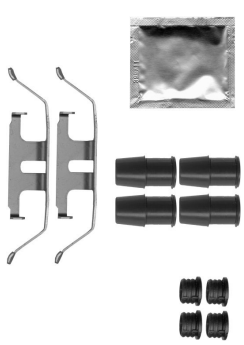

82517900

CITROËN, PEUGEOT

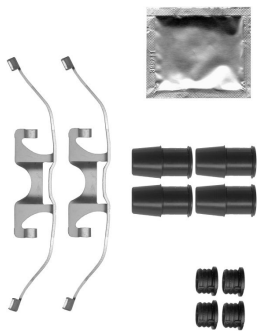

82518000

ALFA ROMEO, FIAT

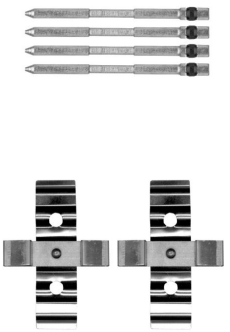

82518100

SUBARU, TOYOTA

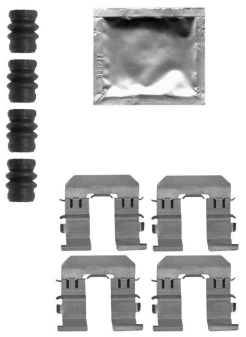

82518200

AUDI, VOLKSWAGEN

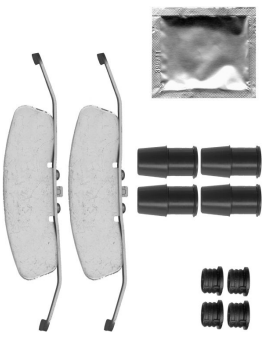

82518300

AUDI, AUDI (FAW), MERCEDES-BENZ

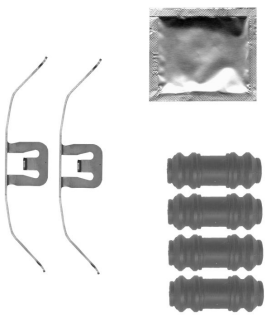

82518400

MERCEDES-BENZ

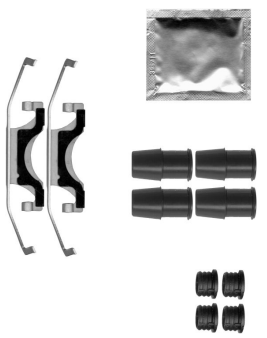

82518500

HONDA



82518600

DACIA, RENAULT

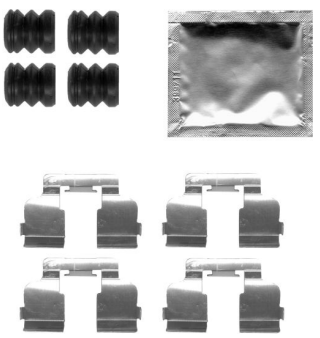

82518700

ALFA ROMEO, DODGE

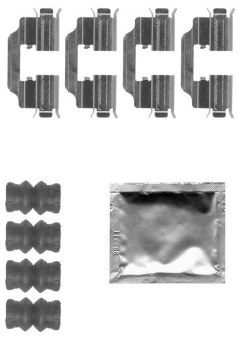

82518800

MERCEDES-BENZ



82518900

BMW, BMW (BRILLIANCE), MERCEDES-BENZ



82519100

NISSAN



82519200

SUZUKI

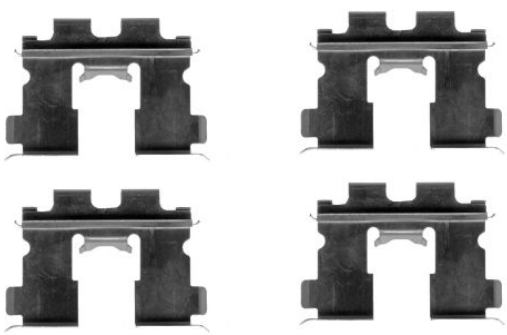

82519300

TOYOTA

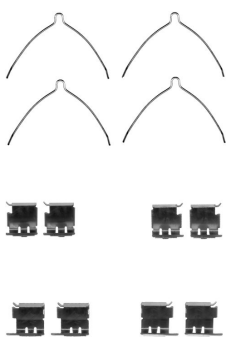

82519500

TOYOTA



82519600

NISSAN



82519700

NISSAN

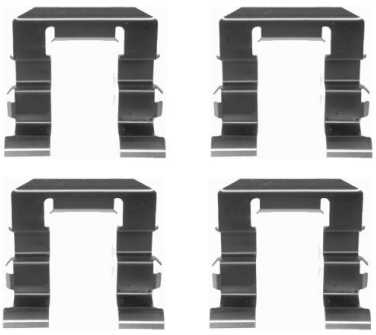

82519800

NISSAN

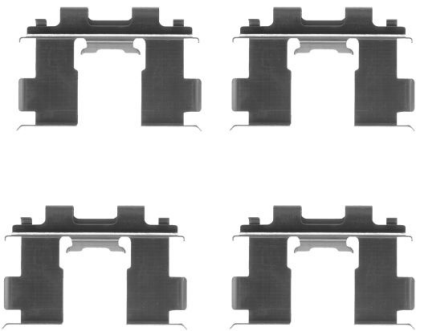

82519900

IVECO



83005700

ROVER



bore ø 19
ø 177.8 x 32

83005900

FIAT

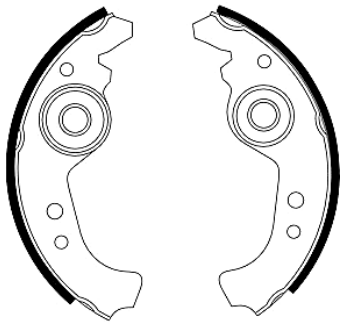

bore ø 19
ø 185 x 31

83015702

HYUNDAI, OPEL, SSANGYONG, VAUXHALL

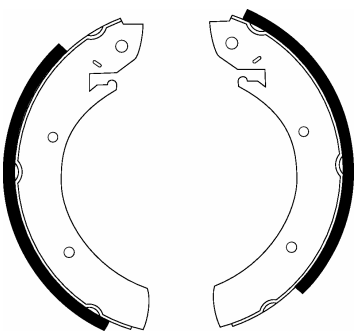

bore ø 25.4
ø 254 x 56

83029100

CHEVROLET, LADA



bore ø 20.6
ø 250 x 51

83037004

ALFA ROMEO

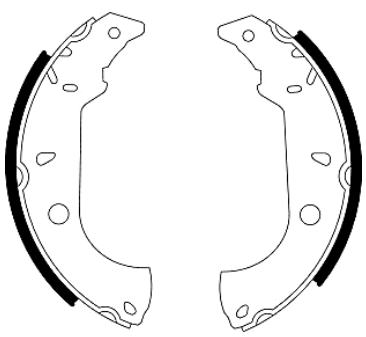

bore ø 17.5
ø 228.6 x 42

83037200

LADA

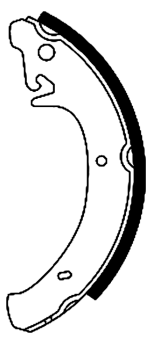

bore ø 20.6
ø 200 x 41

83039601

HONDA

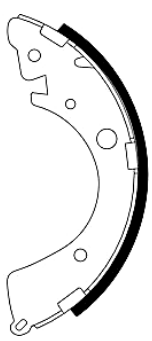

bore ø 19
ø 200 x 36

83043700

FORD

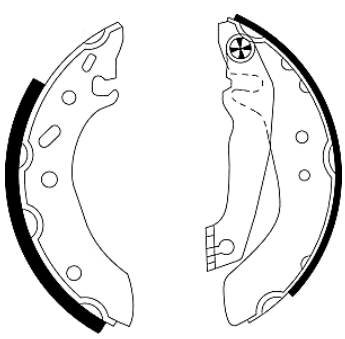

bore ø 20.6
ø 180 x 32

83043900

ROVER

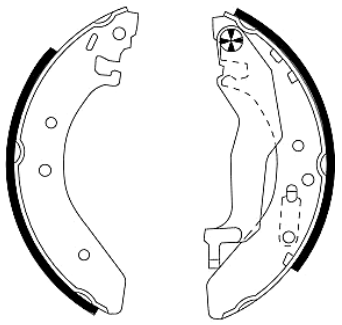

bore ø 19
ø 203.2 x 38

83043901

HONDA

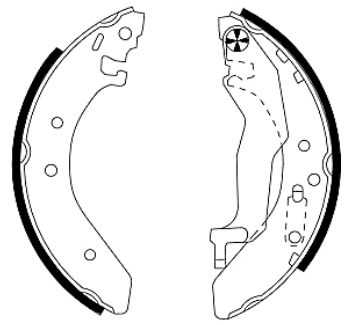

bore ø 19
ø 203.2 x 38

83044000

BMW

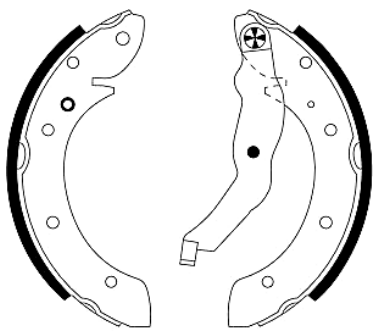

bore ø 22.2
ø 228.6 x 41.5

83044001

BMW

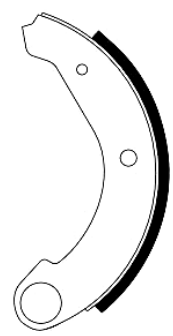

bore ø 23.8
ø 228.6 x 42

83044701

SEAT, SKODA, VOLKSWAGEN

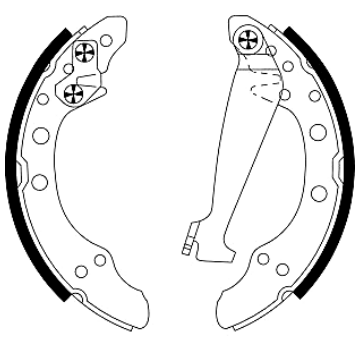

bore ø 19
ø 200 x 40

83044704

VOLKSWAGEN

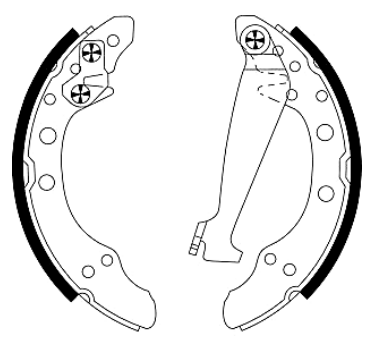

bore ø 17.5
ø 200 x 40

83048007

CITROËN

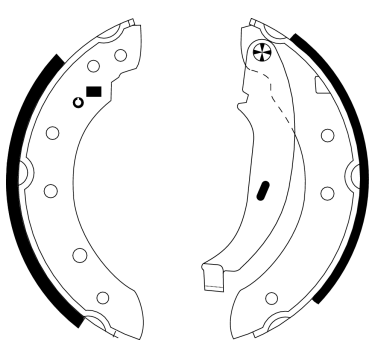

bore ø 20.6
ø 203.2 x 38

83048500

FORD, FORD AUSTRALIA

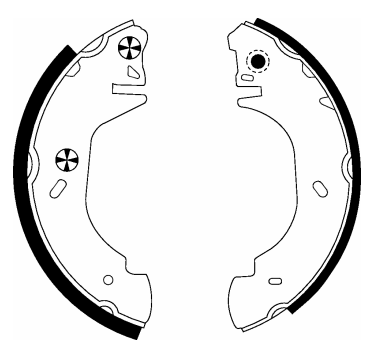

bore ø 22.2
ø 254 x 52

83048601

FORD, FORD AUSTRALIA

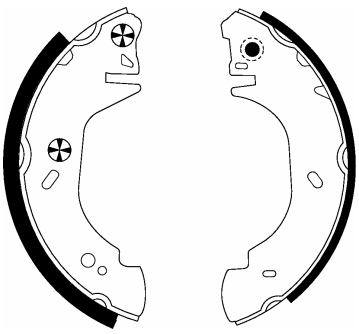

bore ø 20.6
ø 280 x 65

83048602

FORD, FORD AUSTRALIA

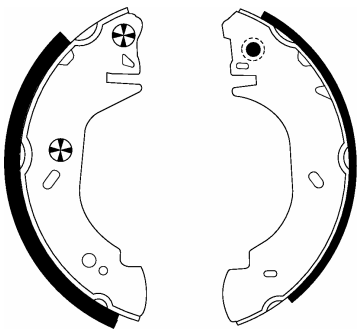

bore ø 25.4
ø 280 x 65

83049002

OPEL

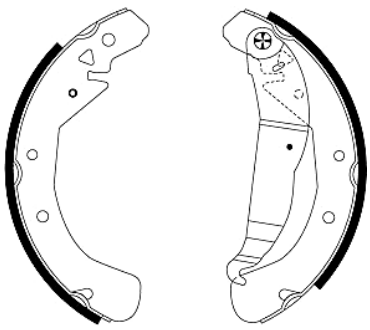

bore ø 20.6
ø 230 x 42

83052501

FORD

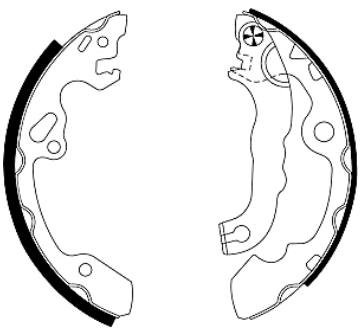

bore ø 22.2
ø 203.2 x 38

83053100

FIAT

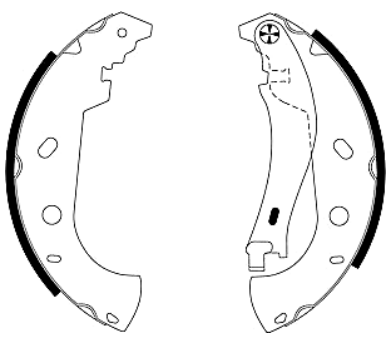

bore ø 22.2
ø 228.6 x 42

83053101

FIAT

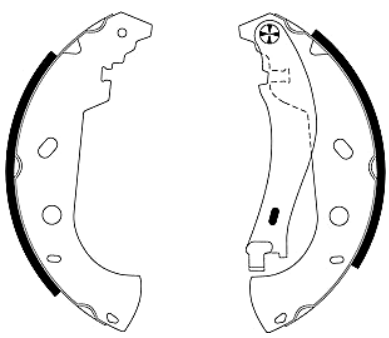

bore ø 20.6
ø 228.6 x 42

83053400

TOYOTA

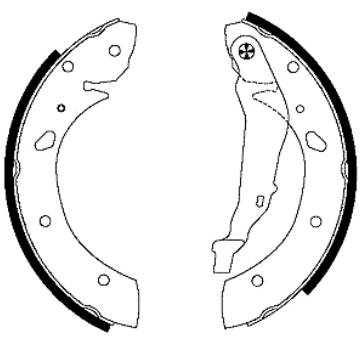

bore ø 20.6
ø 228.6 x 35

83053500

TOYOTA

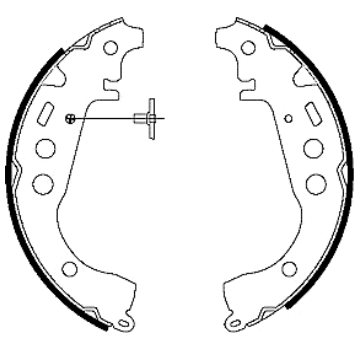

bore ø 19
ø 200 x 32

83054500

OPEL, RENAULT, VAUXHALL

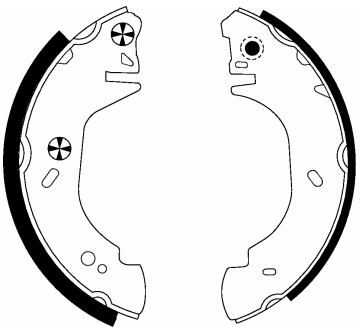

bore ø 23.8
ø 280 x 65

83065401

FIAT

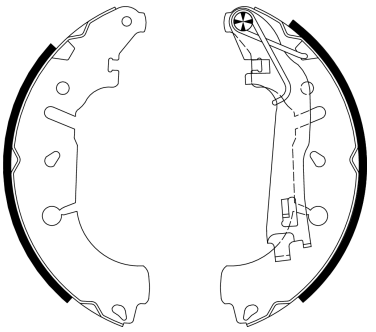

bore ø 20.6
ø 228.6 x 42

84015700

OPEL, VAUXHALL

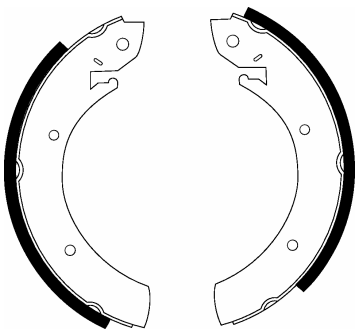

bore ø 25.4
ø 254 x 56

84015701

RENAULT

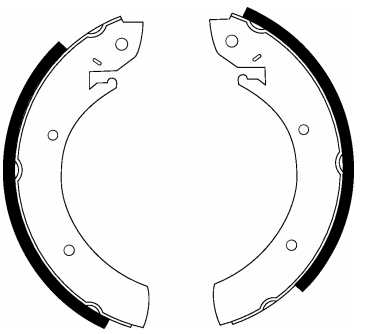

bore ø 25.4
ø 254 x 56

84018200

SEAT, VOLKSWAGEN

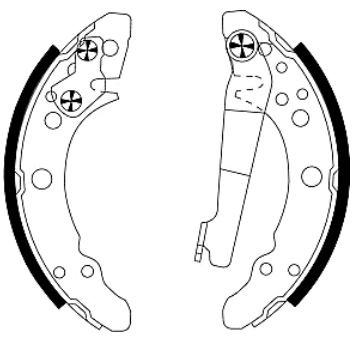

bore ø 17.5
ø 180 x 31

84018202

SEAT, VOLKSWAGEN

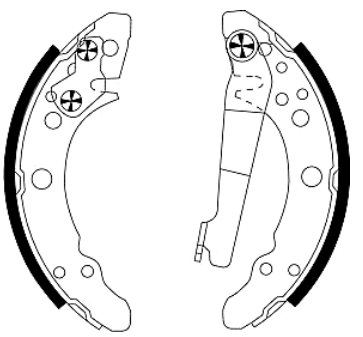

bore ø 15.9
ø 180 x 31

84018205

SEAT, VOLKSWAGEN

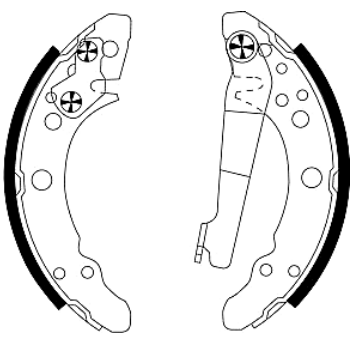

bore ø 17.5
ø 180 x 31

84029200

CITROËN

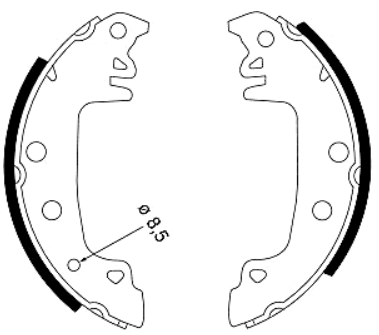

bore ø 22.2
ø 228.6 x 42

84031200

PEUGEOT, WULING

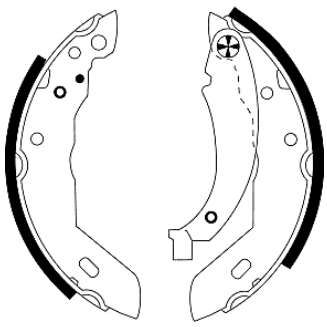

bore ø 19
ø 180 x 32

84031202

CITROËN, PEUGEOT

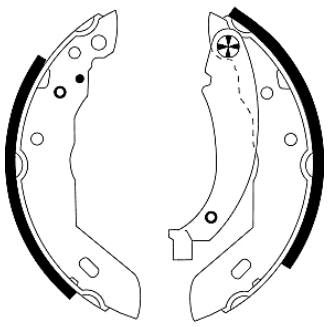

bore ø 20.6
ø 180 x 32

84031203

PEUGEOT

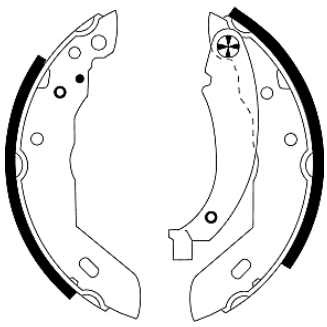

bore ø 20.6
ø 180 x 32

84031804

RENAULT

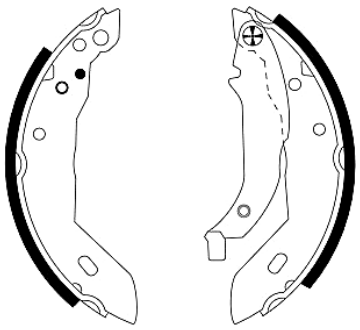

bore ø 20.6
ø 180 x 40

84031806

PEUGEOT

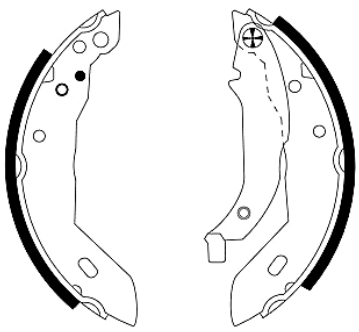

bore ø 20.6
ø 180 x 40

84033200

CHEVROLET, HOLDEN, OPEL, VAUXHALL

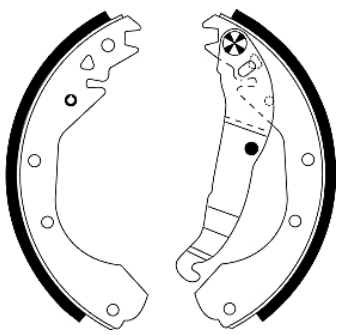

bore ø 19
ø 230 x 50

84033800

SUZUKI

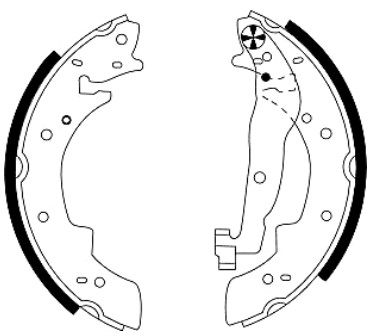

bore ø 22.2
ø 228.6 x 40

84037001

ALFA ROMEO, FIAT

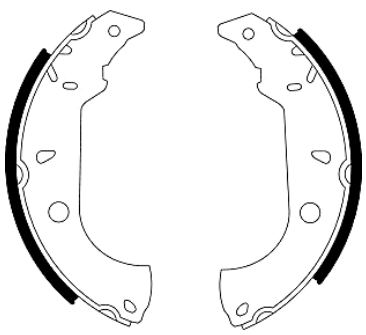

bore ø 20.6
ø 228.6 x 42

84037404

RENAULT

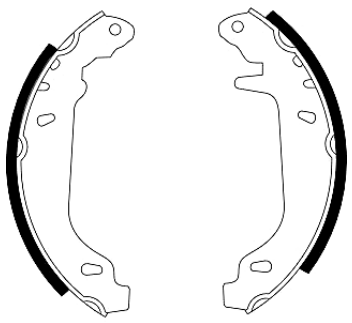

bore ø 20.6
ø 180 x 40

84037406

RENAULT

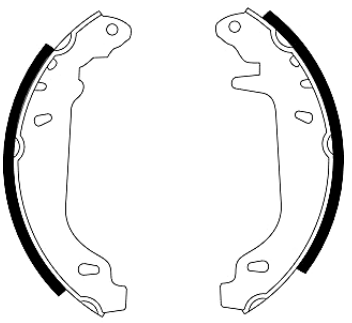

bore ø 20.6
ø 180 x 40

84037408

RENAULT

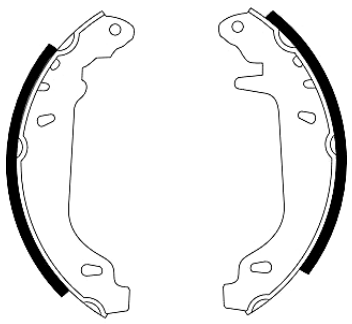

bore ø 20.6
ø 180 x 40

84037409

RENAULT

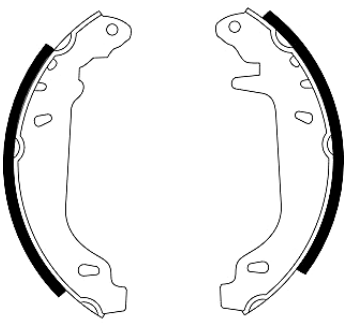

bore ø 20.6
ø 180 x 40

84037902

RENAULT

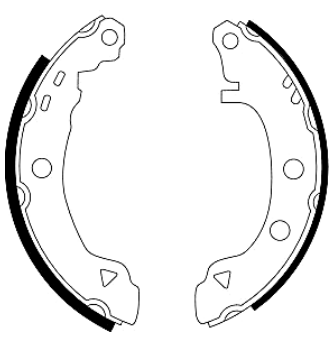

bore ø 19
ø 203.2 x 39

84038000

MEGA

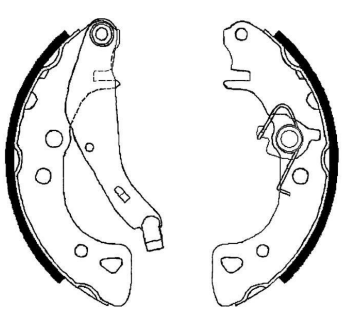

bore ø 19
ø 165 x 32

84038002

CITROËN, PEUGEOT

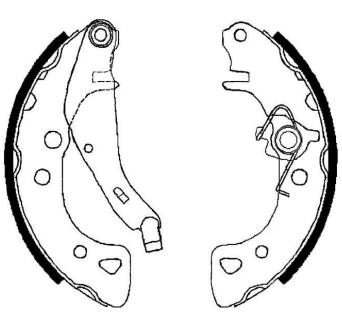

bore ø 19
ø 165 x 32

84038100

PEUGEOT

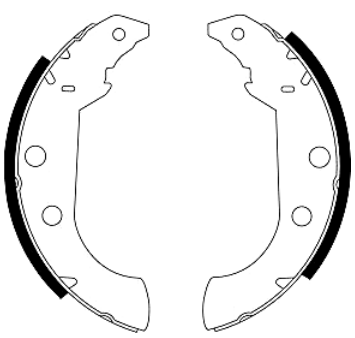

bore ø 20.6
ø 228.6 x 42

84038600

ALFA ROMEO

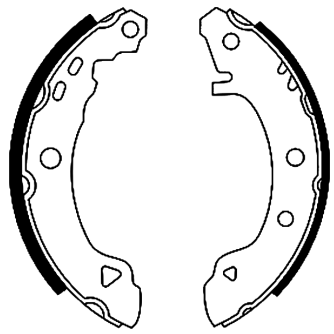

bore ø 22.2
ø 203.2 x 39

84041200

SUZUKI

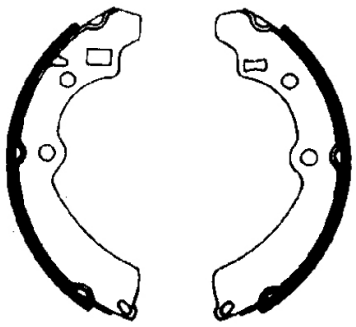

bore ø 22.2
ø 228.6 x 42

84043700

FORD

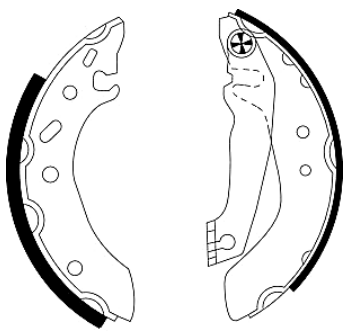

bore ø 20.6
ø 180 x 32

84043800

FORD

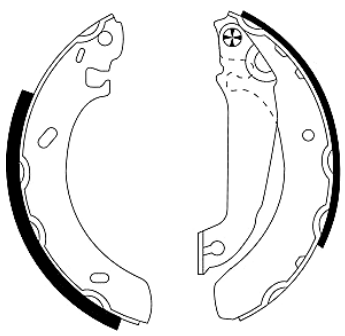

bore ø 19
ø 203.2 x 38

84044100

FORD

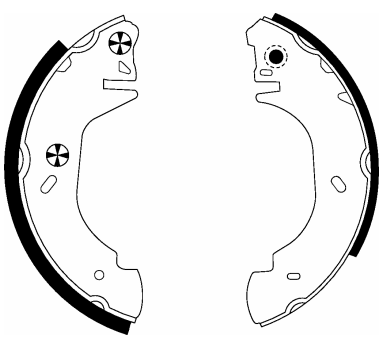

bore ø 22.2
ø 254 x 52

84044101

FORD

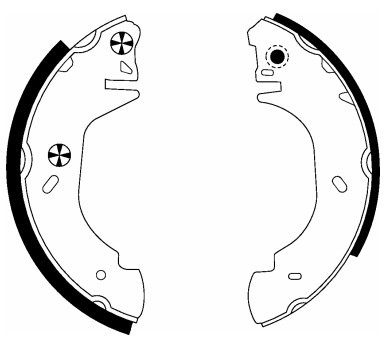

bore ø 20.6
ø 254 x 52

84044201

FORD

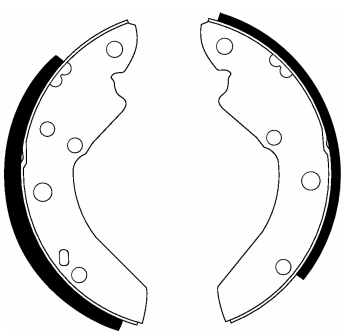

bore ø 20.6
ø 280 x 65

84044202

FORD

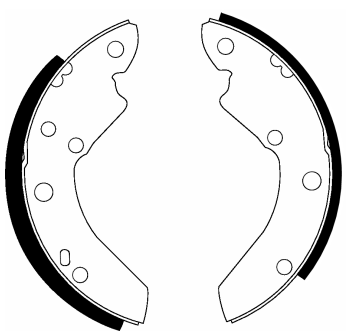

bore ø 25.4
ø 280 x 65

84044400

SEAT, VOLKSWAGEN

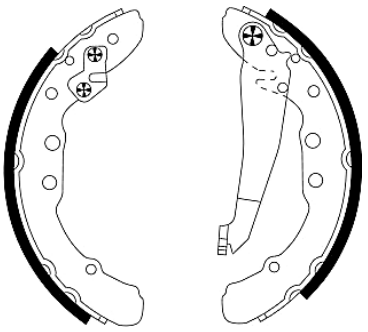

bore ø 20.6
ø 230 x 40

84044703

SEAT, SKODA, VOLKSWAGEN

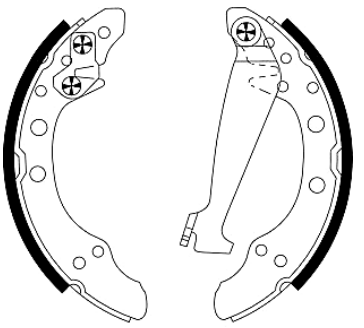

bore ø 19
ø 200 x 40

84044705

SEAT, SKODA, VOLKSWAGEN

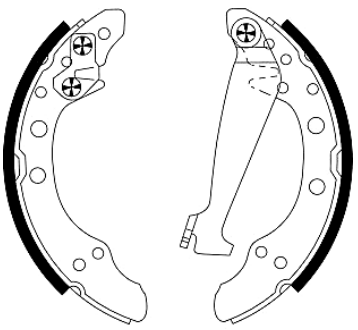

bore ø 15.9
ø 200 x 40

84044706

AUDI, SEAT, SKODA, VOLKSWAGEN

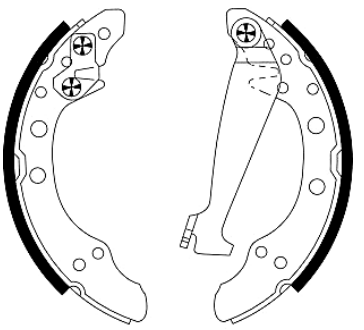

bore ø 17.5
ø 200 x 40

84044707

SKODA, VOLKSWAGEN

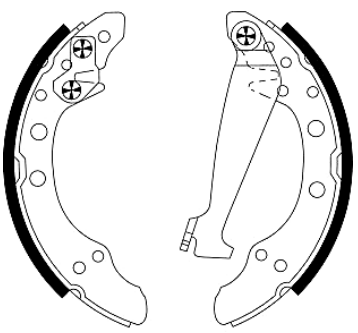

bore ø 22.2
ø 200 x 40

84044708

SEAT, VOLKSWAGEN

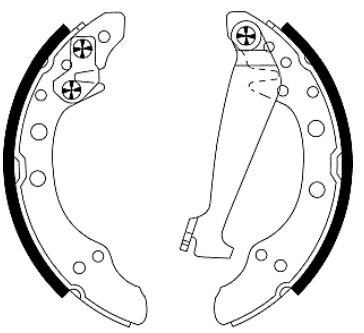

bore ø 15.9
ø 200 x 40

84044801

CHEVROLET, OPEL, VAUXHALL

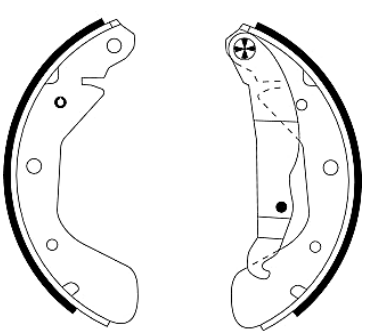

bore ø 19
ø 200 x 28

84044900

DAEWOO, OPEL

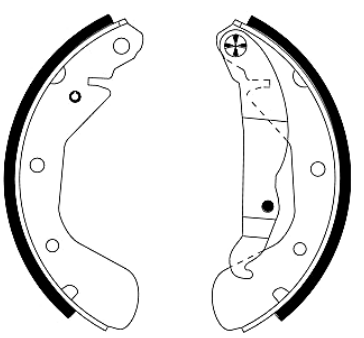

bore ø 19
ø 200 x 45

84044901

DAEWOO

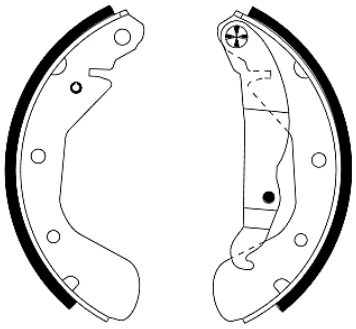

bore ø 17.5
ø 200 x 45

84044902

DAEWOO

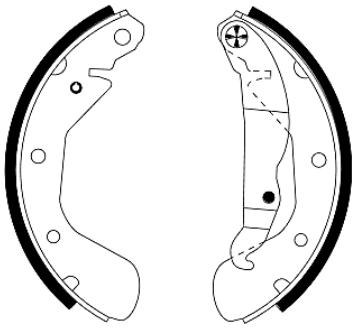

bore ø 20.6
ø 200 x 46

84044903

DAEWOO

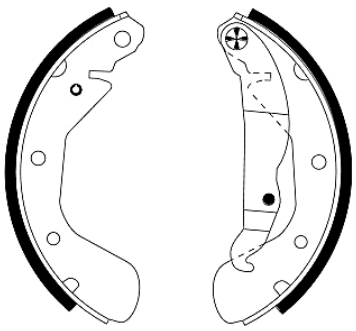

bore ø 17.5
ø 200 x 45

84045200

PEUGEOT

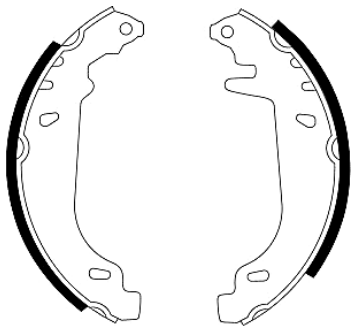

bore ø 20.6
ø 180 x 32

84045201

CITROËN, PEUGEOT

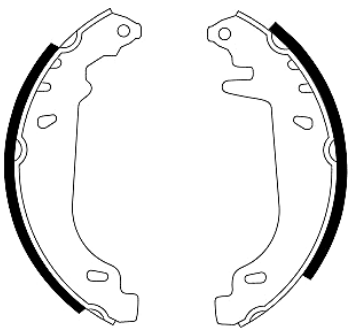

bore ø 20.6
ø 180 x 32

84046501

FIAT

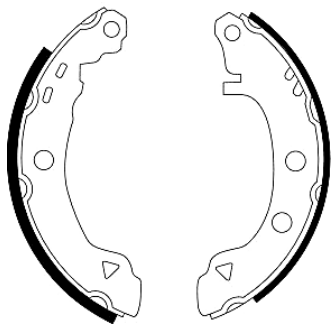

bore ø 22.2
ø 203.2 x 39

84046600

FORD

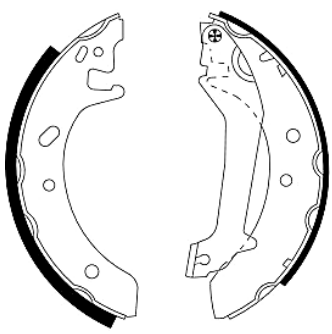

bore ø 22.2
ø 203.2 x 36

84047200

NISSAN

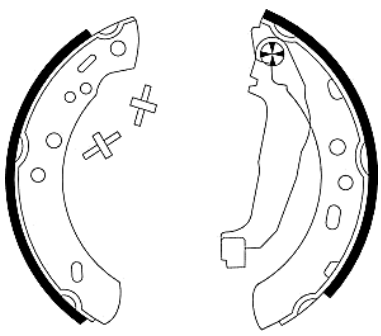

bore ø 17.5
ø 180 x 27

84047800

CITROËN, FIAT, LANCIA, PEUGEOT

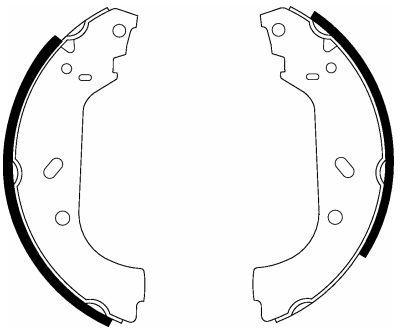

bore ø 19
ø 255 x 61

84047900

FIAT

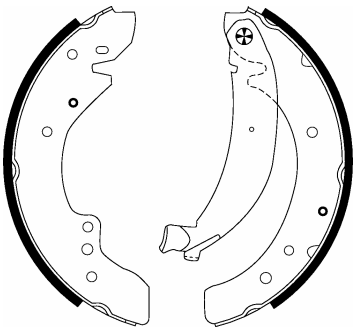

bore ø 25.4
ø 254 x 57

84047901

FIAT

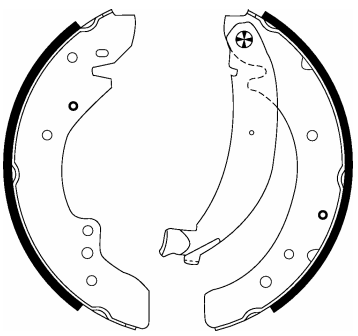

bore ø 27
ø 254 x 57

84048000

PEUGEOT, RENAULT

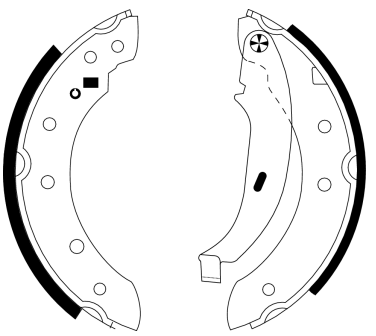

bore ø 19
ø 203.2 x 38

84048001

CITROËN, PEUGEOT

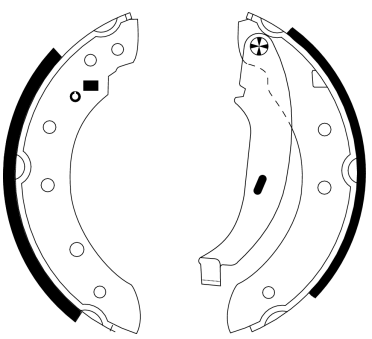

bore ø 20.6
ø 203.2 x 38

84048002

RENAULT

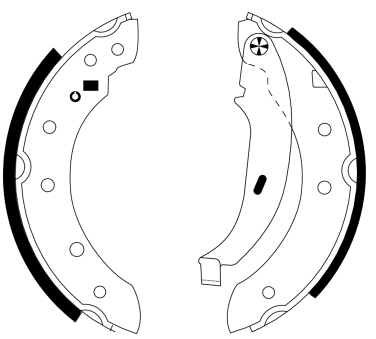

bore ø 17.5
ø 203.2 x 38

84048004

CITROËN, PEUGEOT

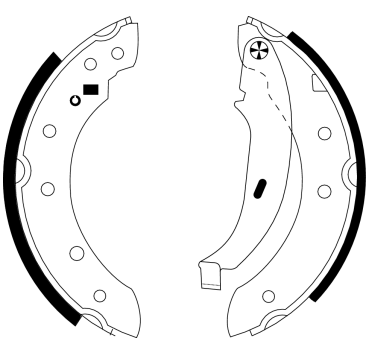

bore ø 20.6
ø 203.2 x 38

84048006

CITROËN, PEUGEOT

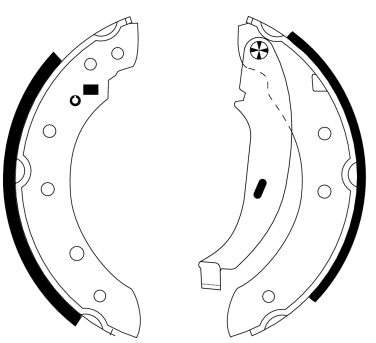

bore ø 20.6
ø 203.2 x 38

84048008

RENAULT

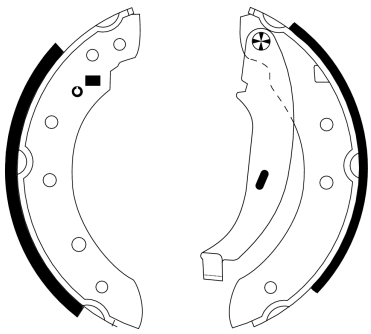

bore ø 20.6
ø 203.2 x 38

84048400

FIAT

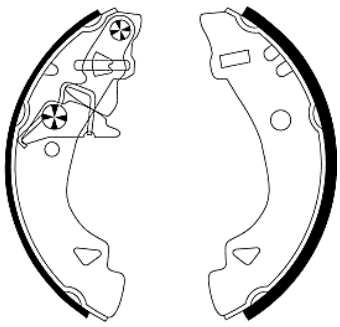

bore ø 19
ø 185 x 31

84048800

FORD, FORD AUSTRALIA, MAZDA

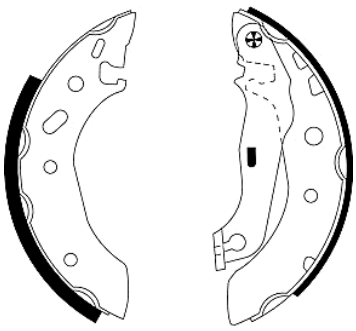

bore ø 17.5
ø 180 x 32

84048900

FORD

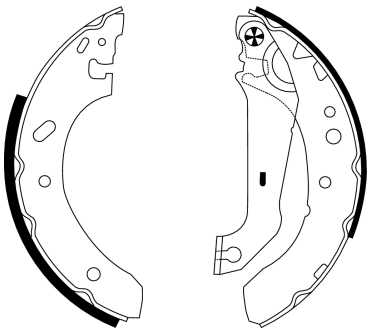

bore ø 22.2
ø 203.2 x 38

84049000

OPEL

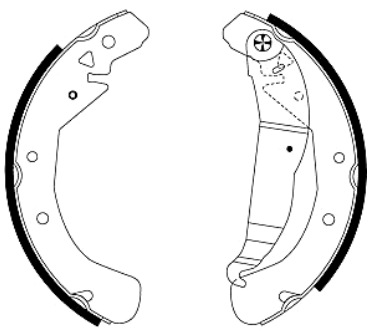

bore ø 19
ø 230 x 42

84049001

OPEL

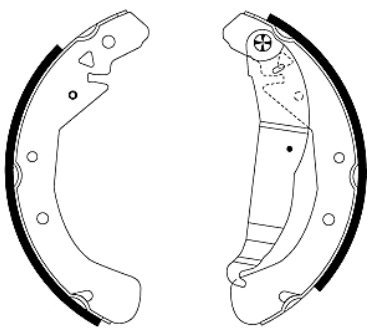

bore ø 19
ø 230 x 42

84049002

OPEL, VAUXHALL

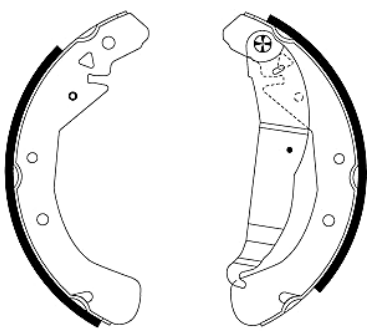

bore ø 20.6
ø 230 x 42

84049100

LANCIA

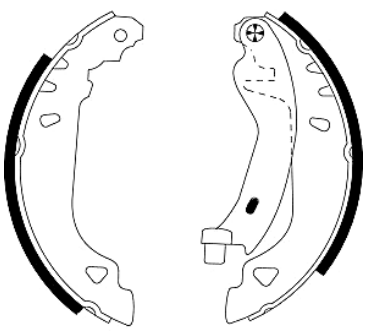

bore ø 19
ø 180 x 32

84049102

LANCIA

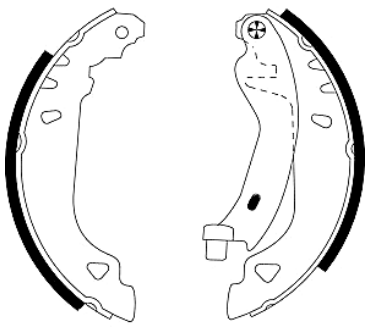

bore ø 22.2
ø 180 x 32

84049103

FIAT, LANCIA

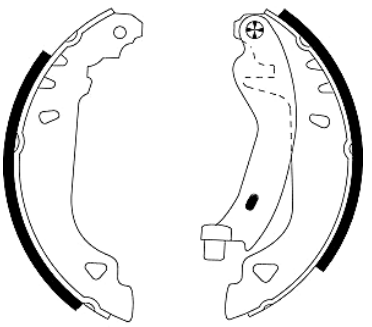

bore ø 20.6
ø 180 x 32

84049200

FIAT, LANCIA

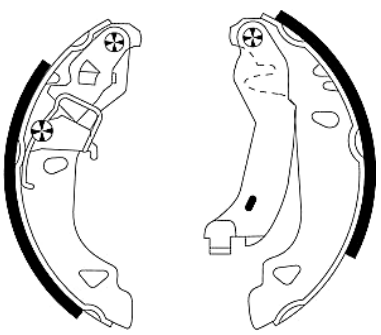

bore ø 20.6
ø 180 x 32

84049201

FIAT

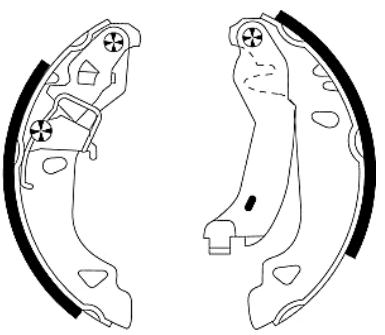

bore ø 22.2
ø 180 x 32

84049400

FORD

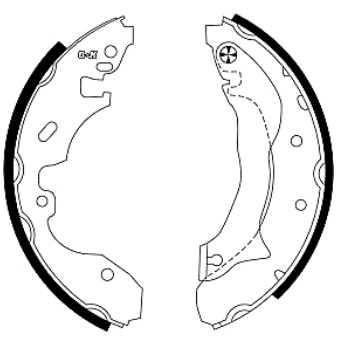

bore ø 20.6
ø 228.6 x 45

84049401

FORD, FORD AUSTRALIA

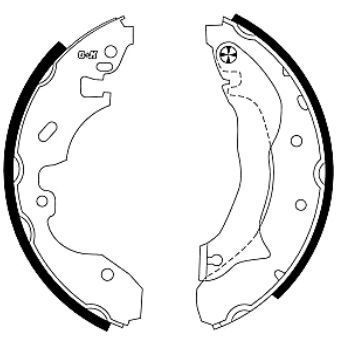

bore ø 22.2
ø 228.6 x 45

84049500

RENAULT

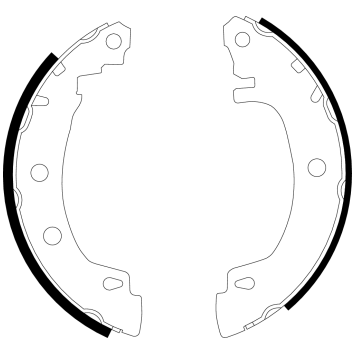

bore ø 17.5
ø 203.2 x 39

84049501

RENAULT

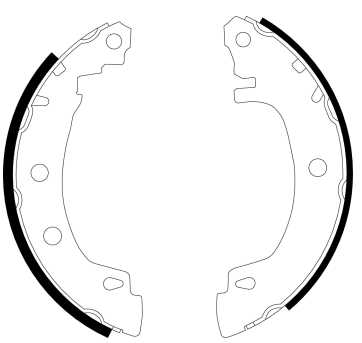

bore ø 19
ø 203.2 x 39

84049600

CITROËN, FIAT, PEUGEOT

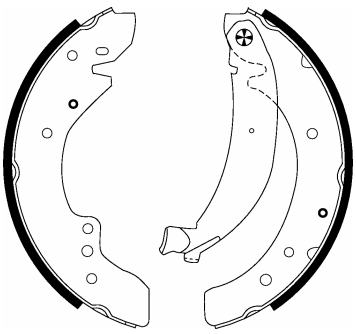

bore ø 28.6
ø 254 x 57

84049601

CITROËN, FIAT, PEUGEOT

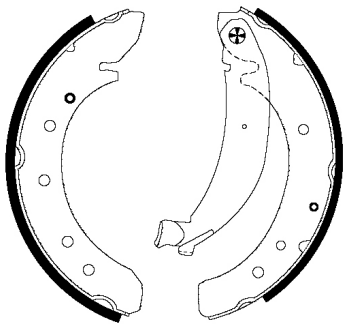

bore ø 22.2
ø 254 x 57

84050000

RENAULT

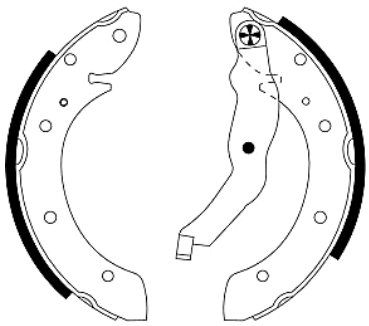

bore ø 20.6
ø 228.6 x 41.5

84050001

RENAULT

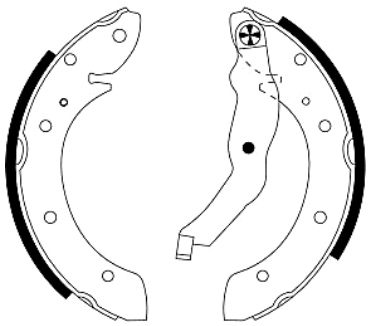

bore ø 22.2
ø 228.6 x 41.5

84052400

SKODA, VOLKSWAGEN

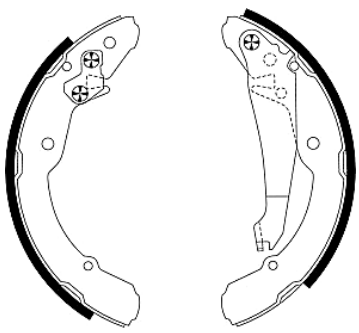

bore ø 19
ø 230 x 32

84052401

SEAT, VOLKSWAGEN

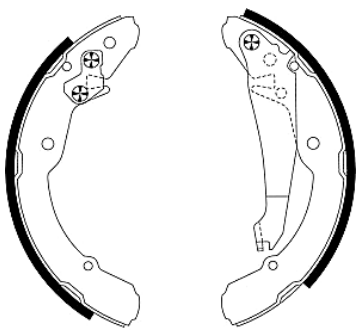

bore ø 20.6
ø 230 x 32

84052402

SKODA

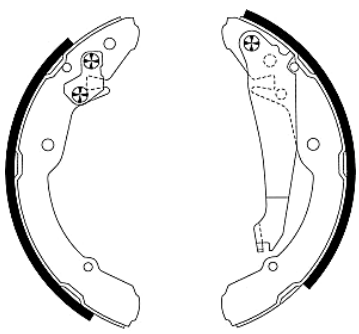

bore ø 20.6
ø 230 x 32

84052500

FORD, FORD AUSTRALIA

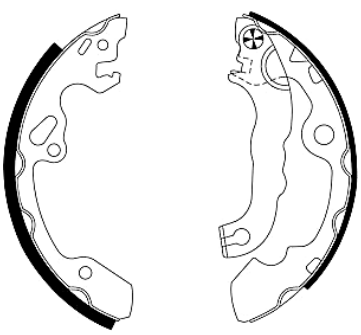

bore ø 20.6
ø 203.2 x 38

84052501

FORD

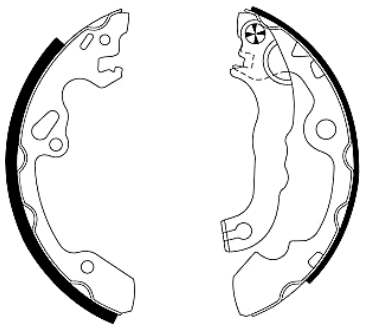

bore ø 22.2
ø 203.2 x 38

84052502

FORD

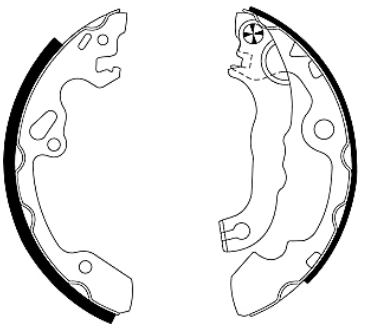

bore ø 19
ø 203.2 x 39

84052600

PEUGEOT

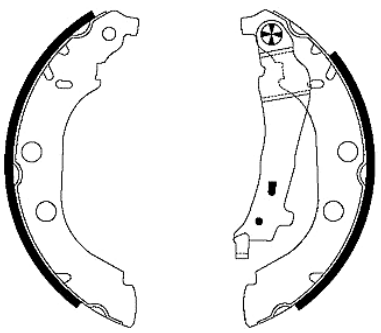

bore ø 20.6
ø 228.6 x 42

84052601

PEUGEOT

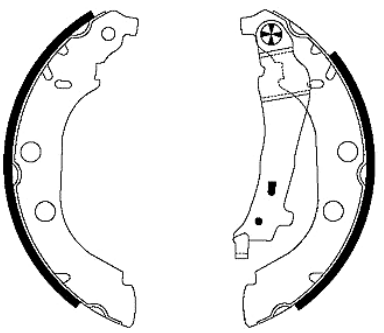

bore ø 20.6
ø 228.6 x 42

84052700

NISSAN

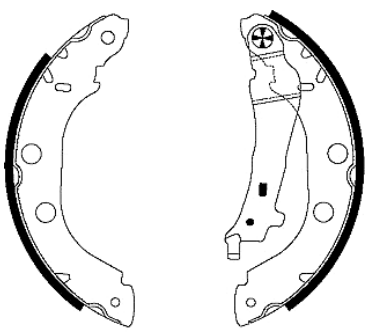

bore ø 20.6
ø 228.6 x 42

84052701

NISSAN, RENAULT

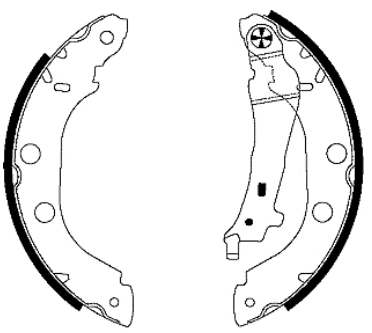

bore ø 22.2
ø 228.6 x 42

84052800

NISSAN, RENAULT

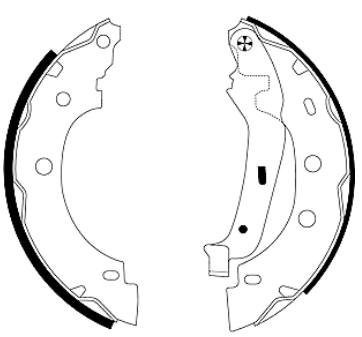

bore ø 22.2
ø 203.2 x 37

84052900

CITROËN, PEUGEOT

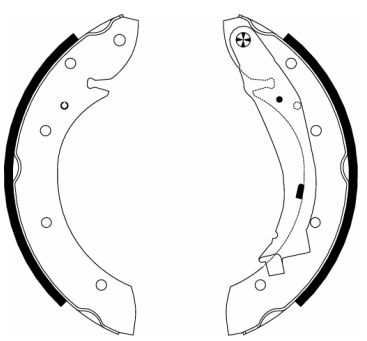

bore ø 22.2
ø 228.6 x 41.5

84053000

MERCEDES-BENZ

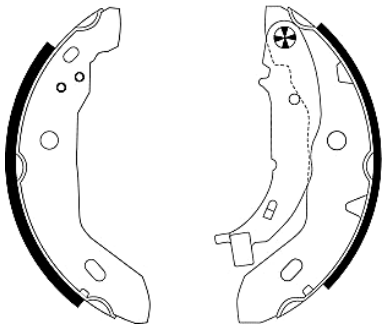

bore ø 17.5
ø 180 x 42

84053001

MERCEDES-BENZ

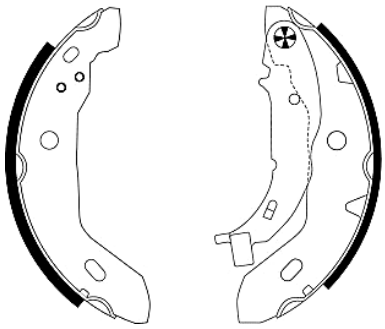

bore ø 19
ø 180 x 42

84053102

FIAT

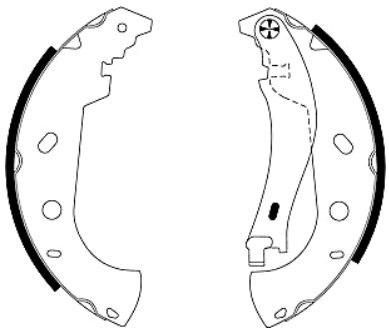

bore ø 20.6
ø 228.6 x 42

84053600

FIAT

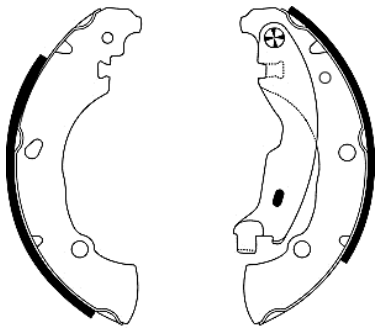

bore ø 22.2
ø 203.2 x 38

84053601

FIAT

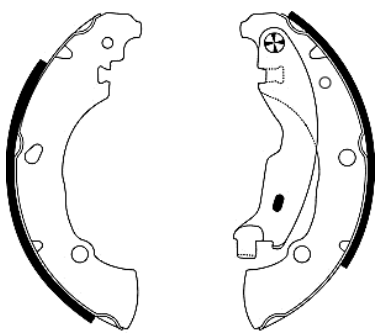

bore ø 22.2
ø 203.2 x 38

84053700

RENAULT

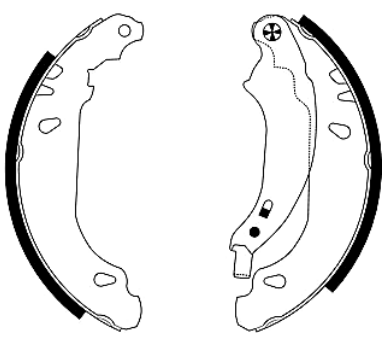

bore ø 19
ø 180 x 42

84053800

PEUGEOT

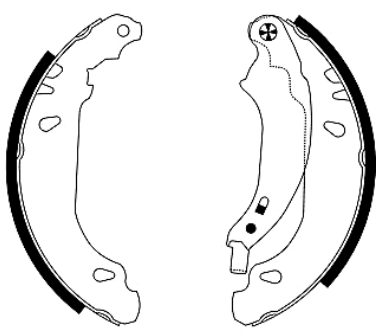

bore ø 19
ø 180 x 32

84053801

PEUGEOT

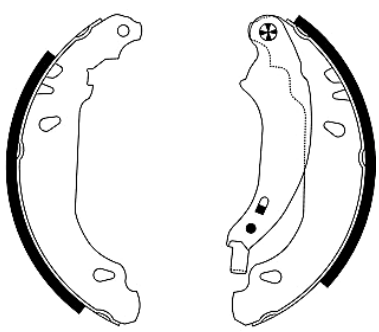

bore ø 20.6
ø 180 x 32

84053802

PEUGEOT

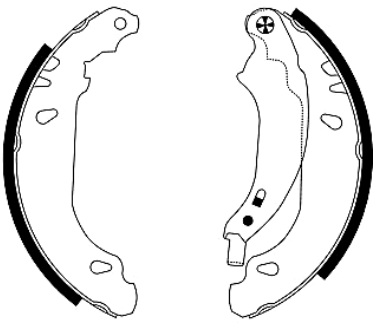

bore ø 19
ø 180 x 32

84053901

RENAULT

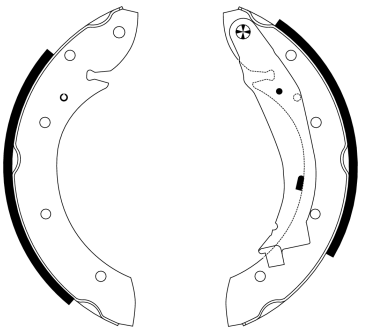

bore ø 22.2
ø 228.6 x 41.5

84054000

CHEVROLET, DAEWOO, PONTIAC

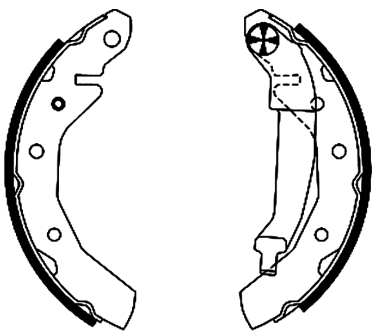

bore ø 17.5
ø 180 x 31

84054300

FIAT, ZASTAVA

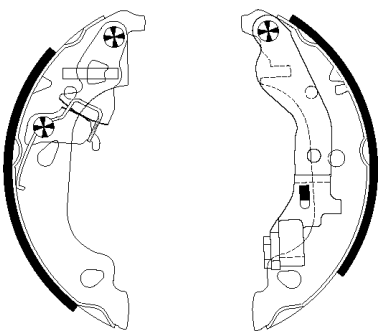

bore ø 20.6
ø 180 x 32

84054400

FIAT, ZASTAVA

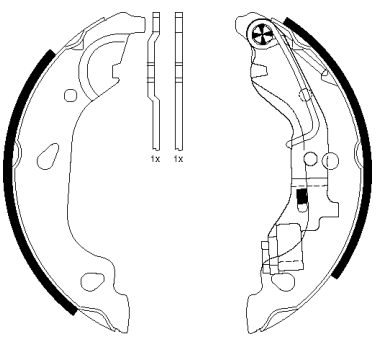

bore ø 20.6
ø 180 x 32

84054401

FIAT

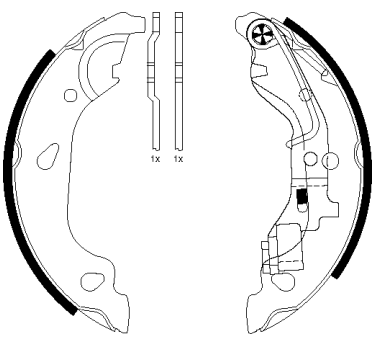

bore ø 22.2
ø 180 x 32

84054500

OPEL, RENAULT, VAUXHALL

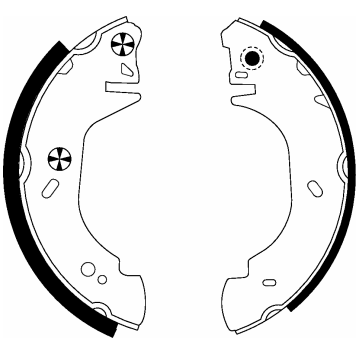

bore ø 23.8
ø 280 x 65

84055200

HONDA

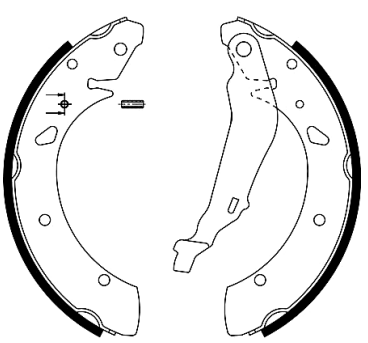

bore ø 20.6
ø 228.6 x 42

84055800

NISSAN

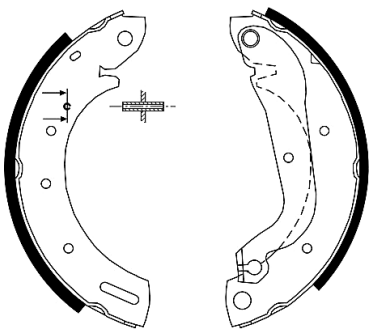

bore ø 25.4
ø 254 x 57

84055802

NISSAN

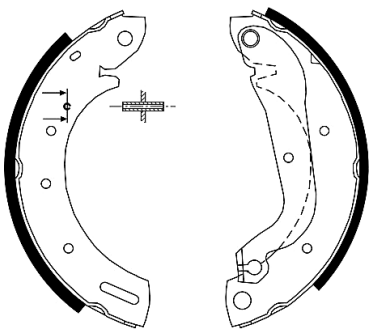

bore ø 23.8
ø 254 x 57

84056400

MITSUBISHI

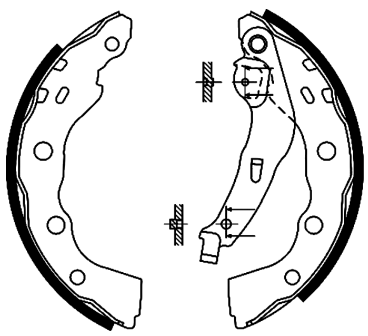

bore ø 19
ø 203.2 x 39

84056600

CITROËN, PEUGEOT

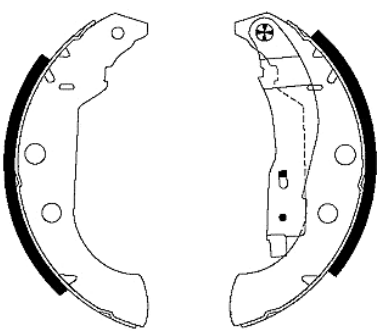

bore ø 20.6
ø 228.6 x 42

84056601

PEUGEOT

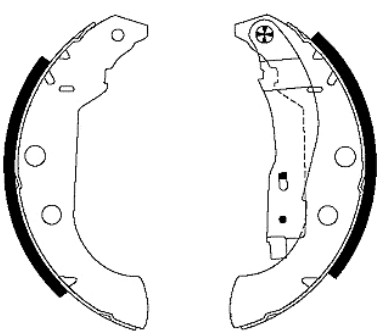

bore ø 22.2
ø 228.6 x 42

84056602

CITROËN, PEUGEOT

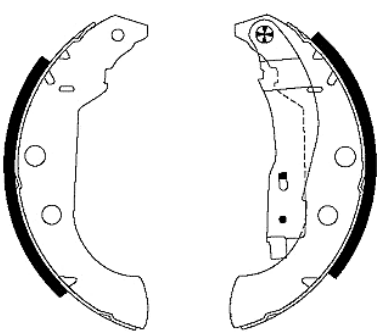

bore ø 20.6
ø 228.6 x 42

84056800

HYUNDAI

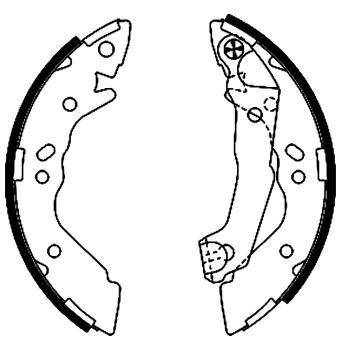

bore ø 17.5
ø 180 x 32

84057300

FORD, FORD AUSTRALIA

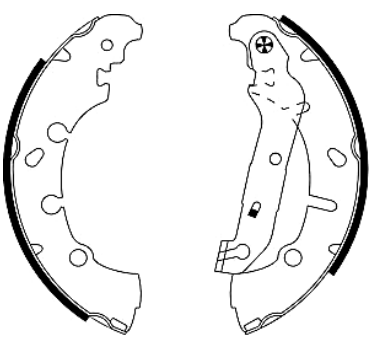

bore ø 19
ø 203.2 x 38

84057301

FORD

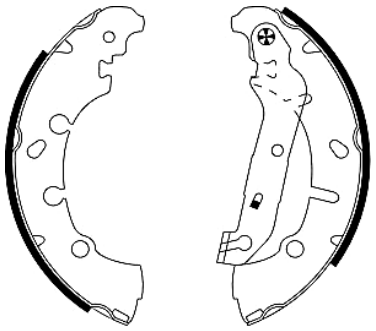

bore ø 19
ø 203.2 x 38

84057400

SMART

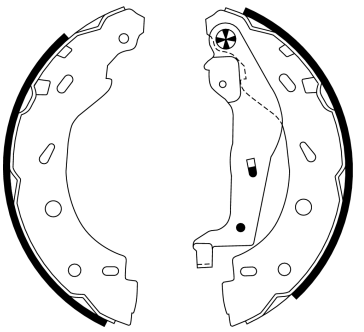

bore ø 17.5
ø 203.2 x 32

84057401

SMART

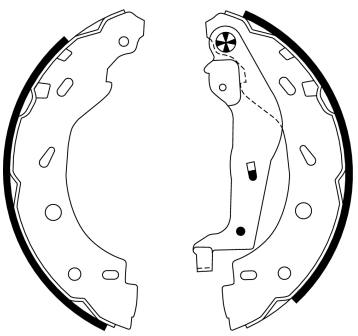

bore ø 22.2
ø 203.2 x 32

84058000

OPEL, VAUXHALL

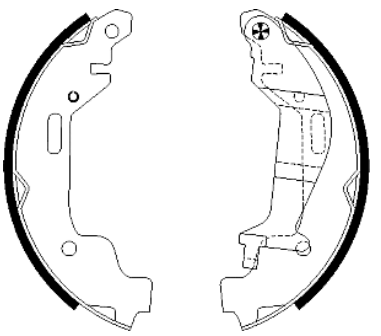

bore ø 15.9
ø 180 x 26

84058100

OPEL, VAUXHALL

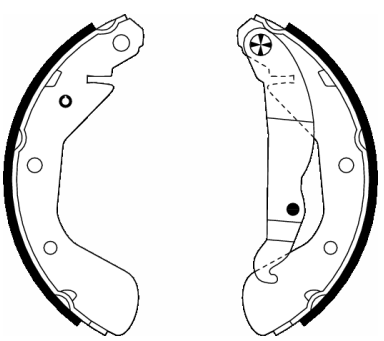

bore ø 19
ø 200 x 28

84058200

HOLDEN, OPEL, VAUXHALL

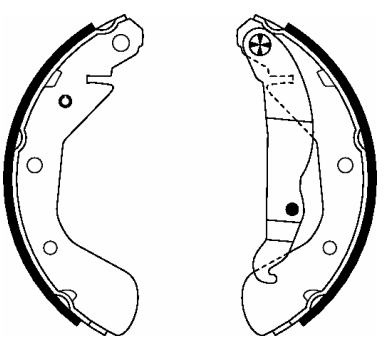

bore ø 19
ø 200 x 45

84058600

FORD, FORD AUSTRALIA, LDV, MAXUS (SAIC MOTOR)

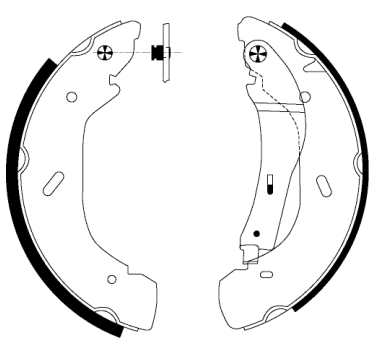

bore ø 25.4
ø 280 x 65

84059100

FORD, FORD AUSTRALIA

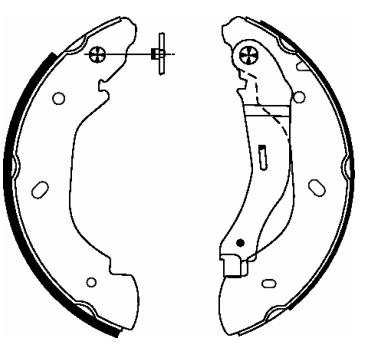

bore ø 25.4
ø 254 x 52

84059500

HYUNDAI

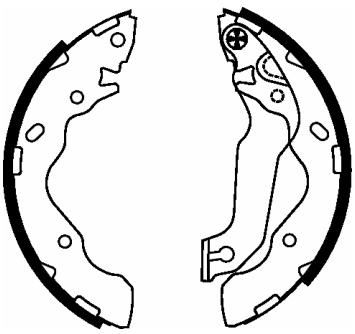

bore ø 19
ø 203.2 x 38

84059600

HYUNDAI

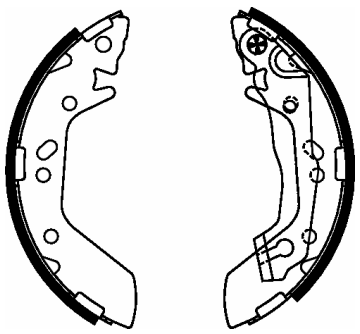

bore ø 19
ø 180 x 35

84059800

CITROËN, CITROËN (DF-PSA), PEUGEOT

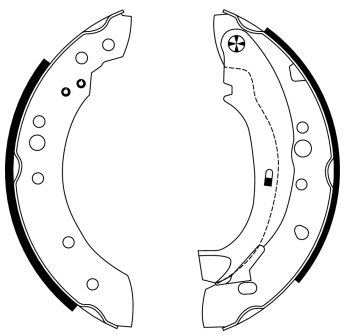

bore ø 19
ø 203.2 x 38

84059801

CITROËN

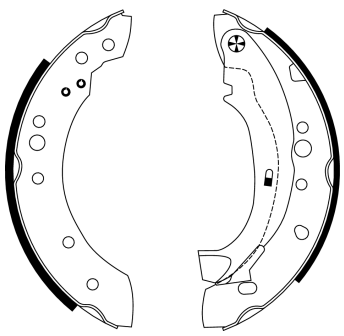

bore ø 20.6
ø 203.2 x 38

84059900

FIAT

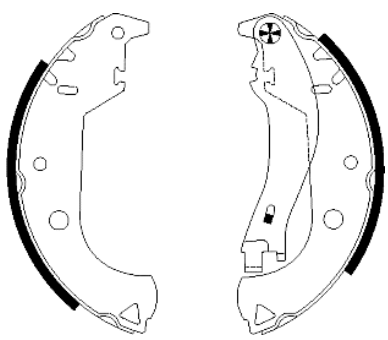

bore ø 20.6
ø 228.6 x 42

84060000

FORD, FORD AUSTRALIA

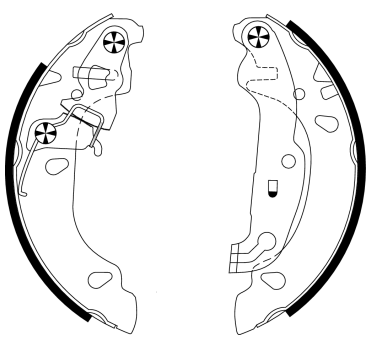

bore ø 19
ø 180 x 32

84060200

RENAULT

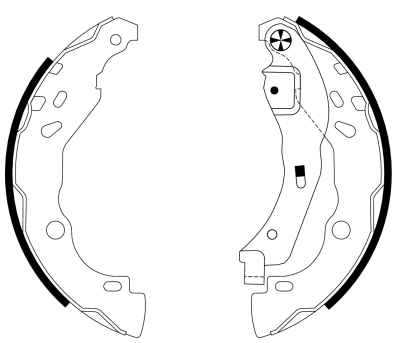

bore ø 17.5
ø 203.2 x 38

84060201

RENAULT

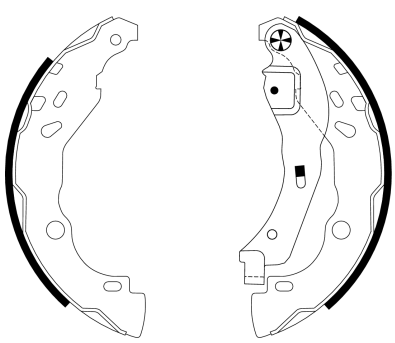

bore ø 19
ø 203.2 x 38

84060900

CITROËN, FIAT, PEUGEOT

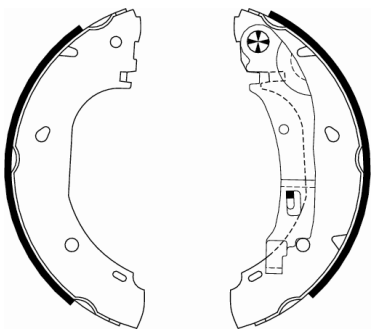

bore ø 27
ø 254 x 57

84061000

FIAT

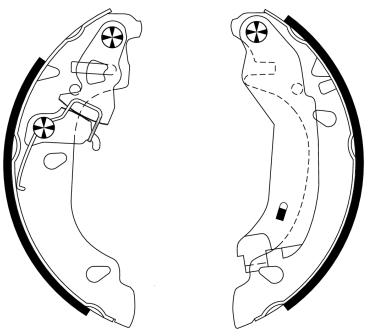

bore ø 20.6
ø 180 x 32

84061100

FIAT

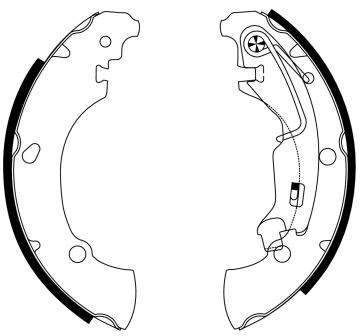

bore ø 20.6
ø 203.2 x 38

84061101

FIAT, LANCIA

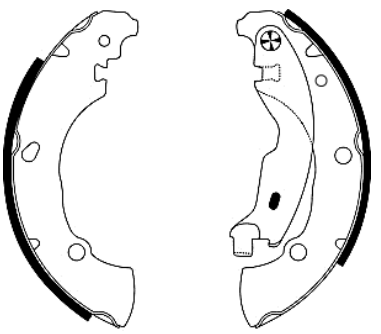

bore ø 22.2
ø 203.2 x 38

84061400

FORD

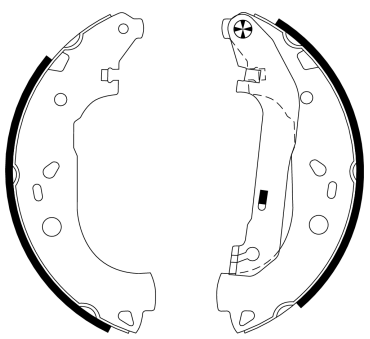

bore ø 20.6
ø 228.6 x 57

84061600

CITROËN, LANCIA

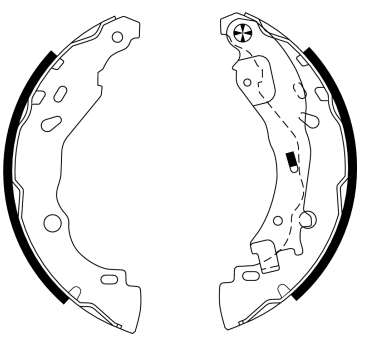

bore ø 20.6
ø 203.2 x 37

84061601

LANCIA

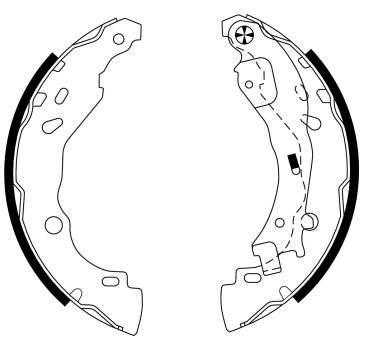

bore ø 19
ø 203.2 x 37

84061602

CITROËN, CITROËN (DF-PSA), PEUGEOT

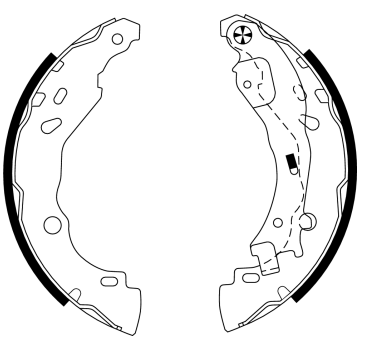

bore ø 19
ø 203.2 x 37

84061801

PEUGEOT

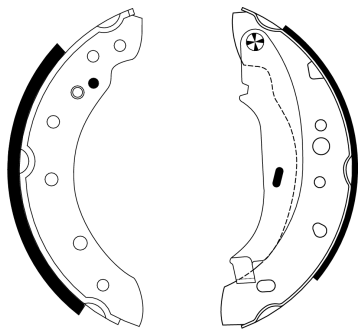

bore ø 20.6
ø 203.2 x 38

84062000

FIAT

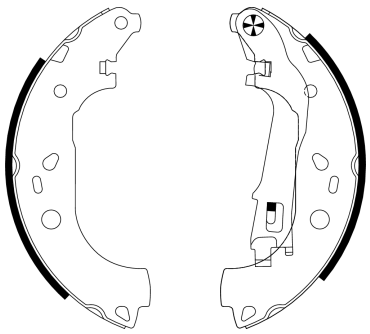

bore ø 20.6
ø 228.6 x 42

84062001

FIAT

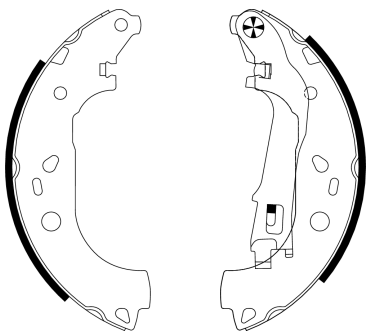

bore ø 20.6
ø 228 x 40

84062600

NISSAN, RENAULT

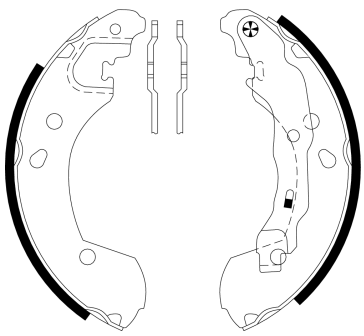

bore ø 19
ø 203.2 x 36.5

84063300

HYUNDAI

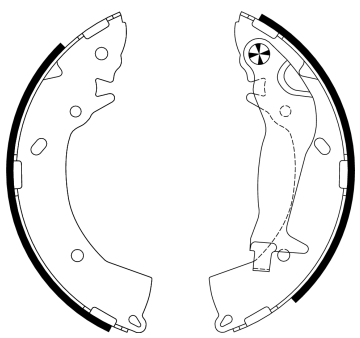

bore ø 17.5
ø 203.2 x 31

84064500

TOYOTA

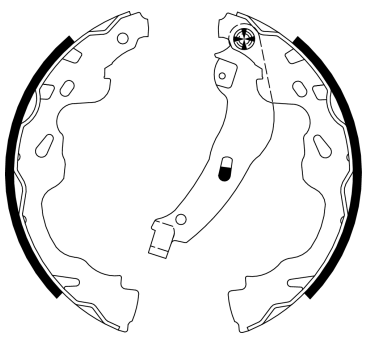

bore ø 19
ø 200 x 32

84064501

CITROËN, PEUGEOT, TOYOTA

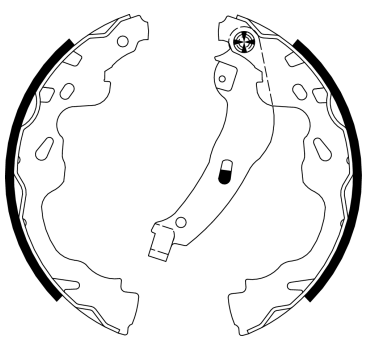

bore ø 17.5
ø 200 x 32

84064502

OPEL, SUZUKI, VAUXHALL

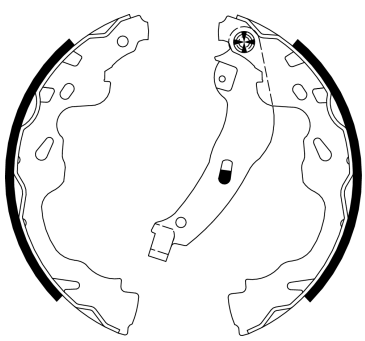

bore ø 19
ø 200 x 32

84064600

FIAT, FORD

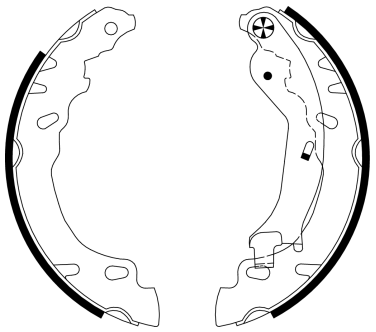

bore ø 20.6
ø 180 x 32

84064900

FORD, FORD AUSTRALIA

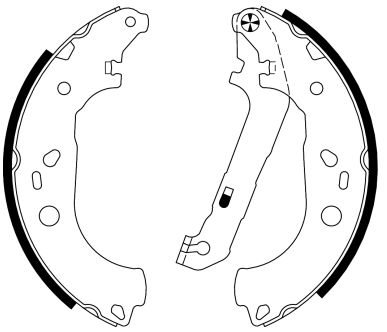

bore ø 20.6
ø 228.6 x 42

84065100

NISSAN

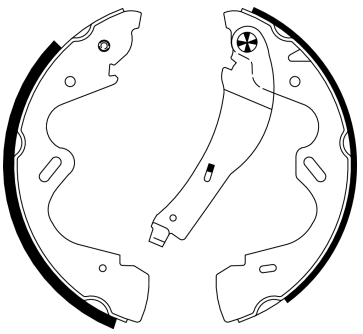

bore ø 23.8
ø 280 x 65

84065200

OPEL, SUBARU, SUZUKI, VAUXHALL

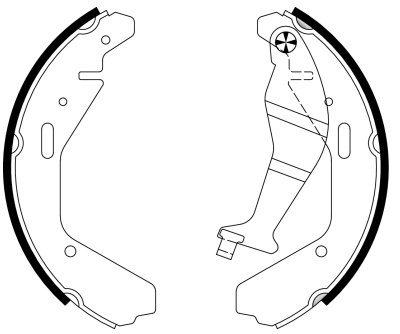

bore ø 15.9
ø 200 x 29

84065201

SUZUKI

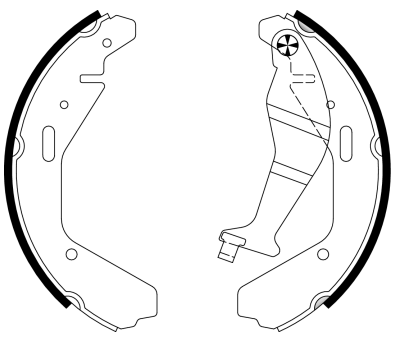

bore ø 15.9
ø 200 x 29

84065300

CITROËN, FIAT, OPEL, PEUGEOT, VAUXHALL

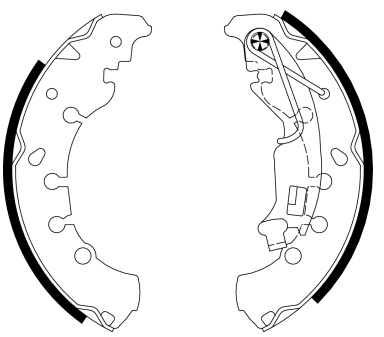

bore ø 19
ø 203.2 x 38

84065301

CITROËN, FIAT, PEUGEOT

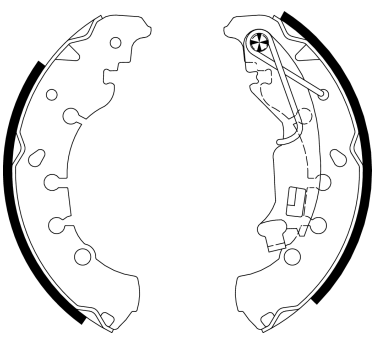

bore ø 20.6
ø 203.2 x 38

84065400

FIAT, OPEL

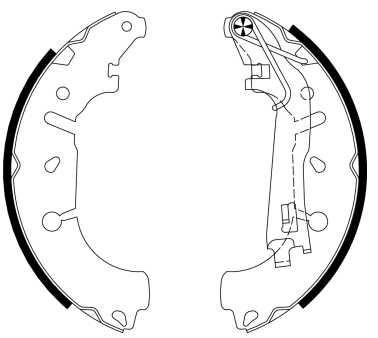

bore ø 20.6
ø 228.6 x 42

84065402

OPEL, VAUXHALL

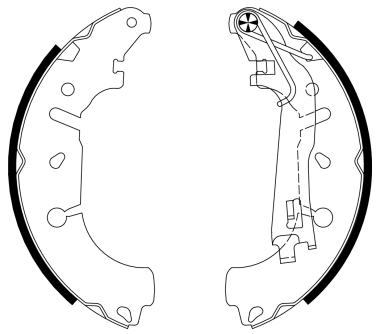

bore ø 19
ø 228.6 x 42

84066600

SMART

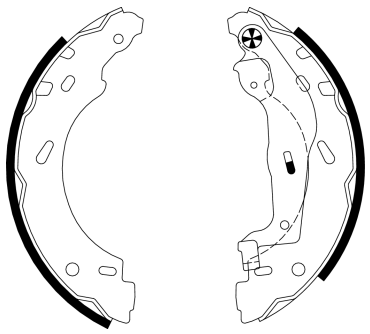

bore ø 20.6
ø 203.2 x 32

84067200

CITROËN, PEUGEOT

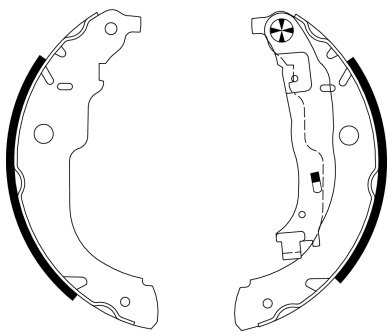

bore ø 20.6
ø 228 x 42

84067201

CITROËN, PEUGEOT

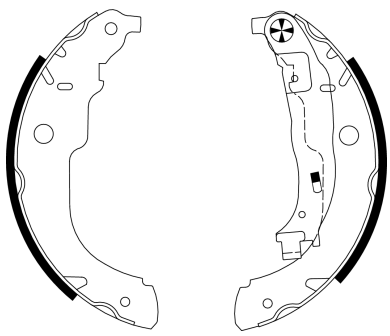

bore ø 20.6
ø 228 x 42

84067500

FIAT, SUZUKI

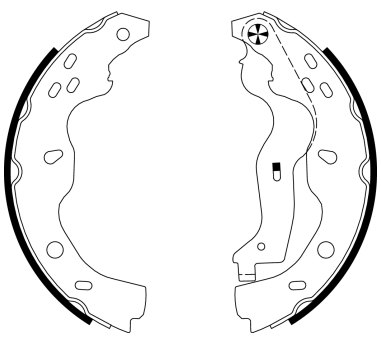

bore ø 19
ø 220 x 35

84068800

MITSUBISHI, SMART

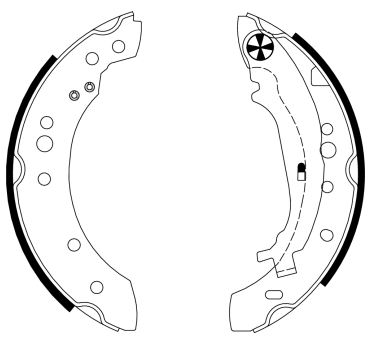

bore ø 19
ø 203 x 38

84069200

FORD

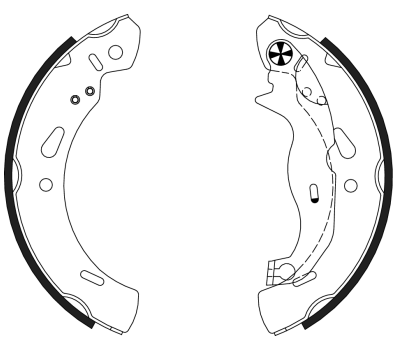

bore ø 19
ø 200 x 32

84069300

DACIA, RENAULT

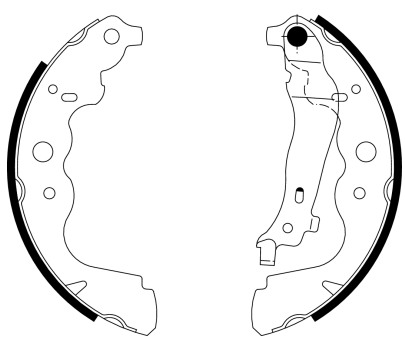

bore ø 22
ø 228.6 x 42

84075000

TOYOTA

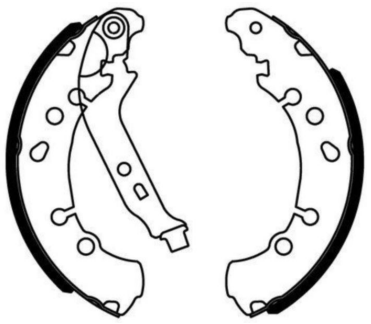

bore ø 20.6
ø 203 x 39

91005700

ROVER

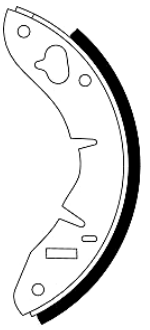

ø 177.8 x 32

91005900

FIAT, FSO, ZASTAVA

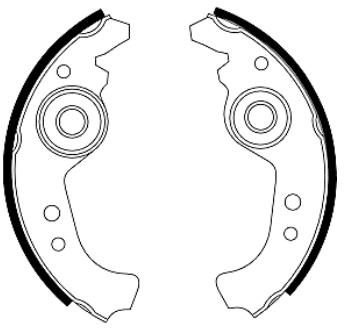

ø 185 x 31

91007800

VOLKSWAGEN

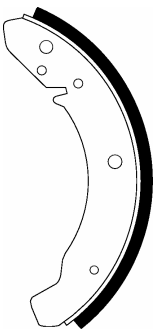

ø 230 x 40

91011200

PEUGEOT

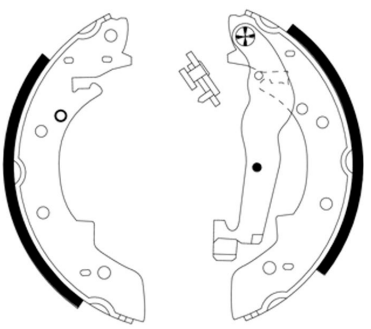

ø 228.6 x 42

91015700

DAEWOO, HYUNDAI, OPEL, RENAULT, SSANGYONG, VAUXHALL

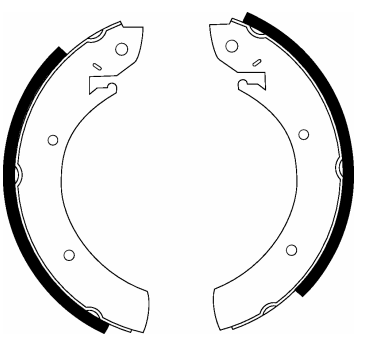

ø 254 x 56

91015900

LDV

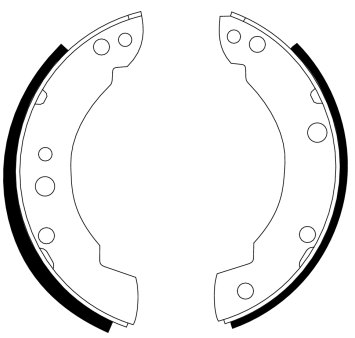

ø 228.6 x 45

91016100

IVECO, LDV

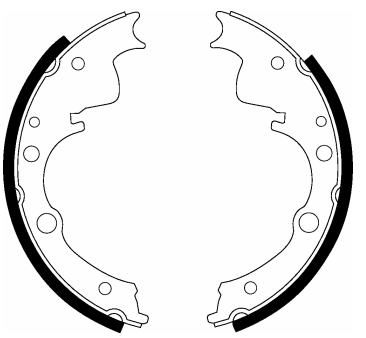

ø 254 x 70

91018200

SEAT, VOLKSWAGEN

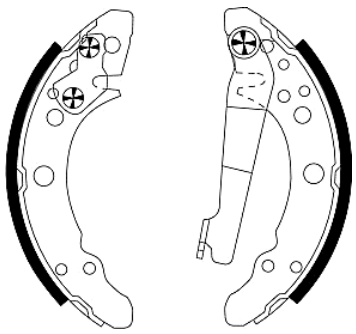

ø 180 x 31

91018400

HOLDEN, OPEL, SAAB, VAUXHALL

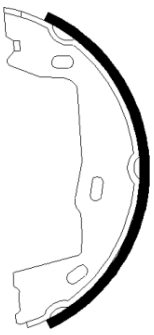

ø 160 x 24.5

91028000

TOYOTA

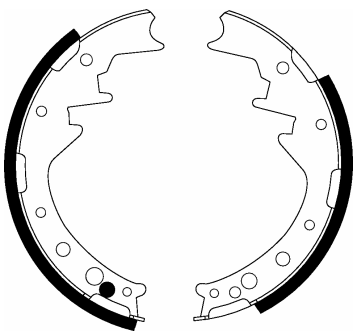

ø 254 x 58

91029100

CHEVROLET, LADA

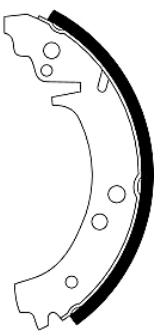

ø 250 x 51

91029200

CITROËN

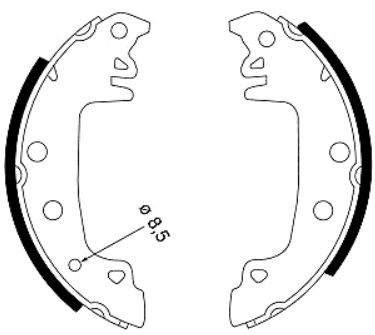

ø 228.6 x 42

91029700

RENAULT

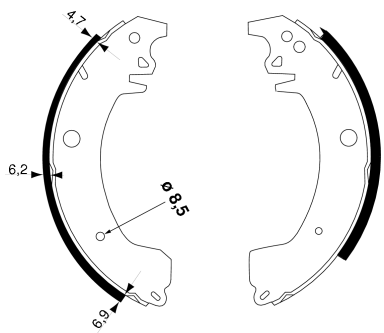

ø 255 x 45

91030400

PEUGEOT

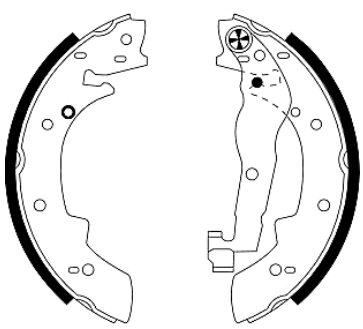

ø 228.6 x 41.5

91031100

CITROËN, DALLAS, PEUGEOT, WULING

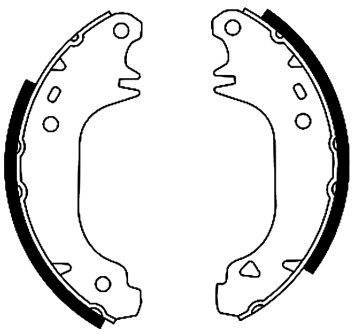

ø 180 x 32

91031200

CITROËN, DALLAS, PEUGEOT, WULING

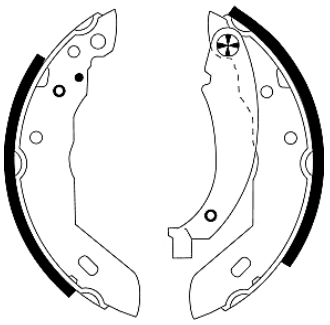

ø 180 x 32

91031800

PEUGEOT, RENAULT

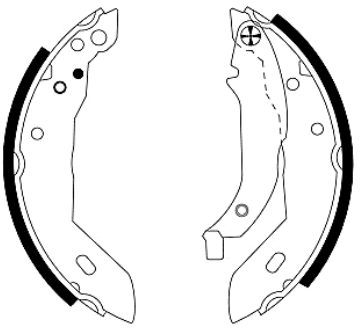

ø 180 x 40

91032800

MERCEDES-BENZ

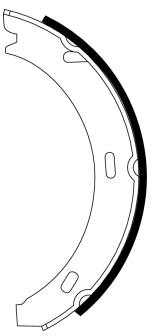

ø 164 x 20

91033200

CHEVROLET, HOLDEN, OPEL, VAUXHALL

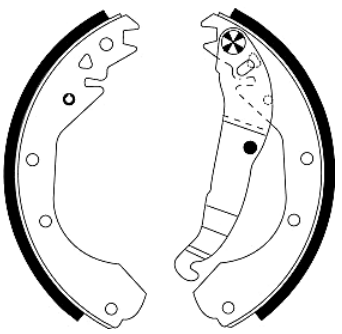

ø 230 x 50

91033400

ALPINA, BMW, WIESMANN

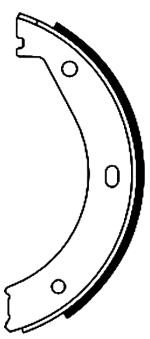

ø 180 x 25

91033800

SUZUKI

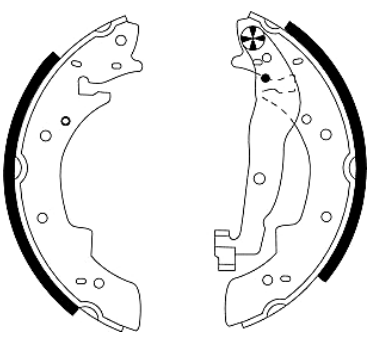

ø 228.6 x 40

91034800

ISUZU

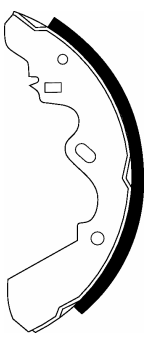

ø 254 x 52

91035200

MITSUBISHI

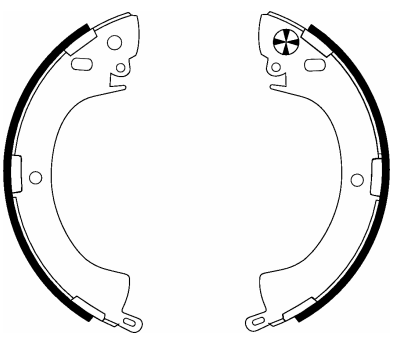

ø 254 x 52

91036100

TOYOTA

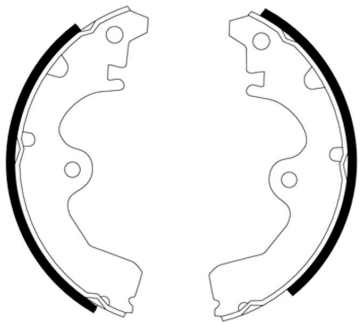

ø 180 x 32

91037201

LADA

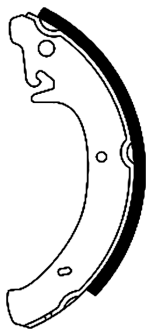

ø 200 x 41

91037400

RENAULT

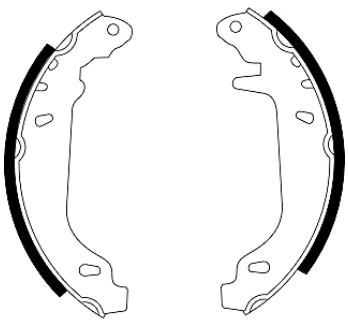

ø 180 x 40

91037500

MORGAN

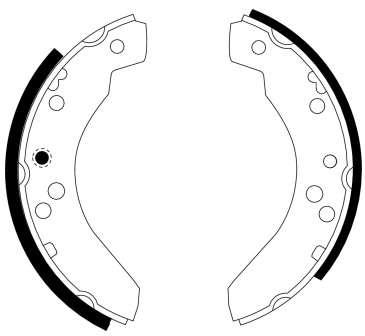

ø 228.6 x 45

91037600

LDV

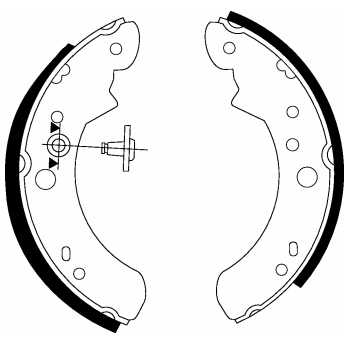

ø 254 x 70

91037901

RENAULT

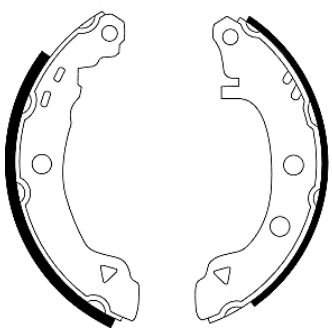

ø 203.2 x 39

91038000

CITROËN, MEGA, PEUGEOT

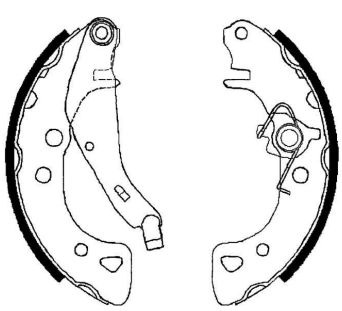

ø 165 x 32

91038100

PEUGEOT

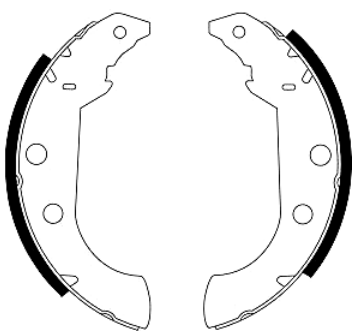

ø 228.6 x 42

91038201

CITROËN, DALLAS, PEUGEOT

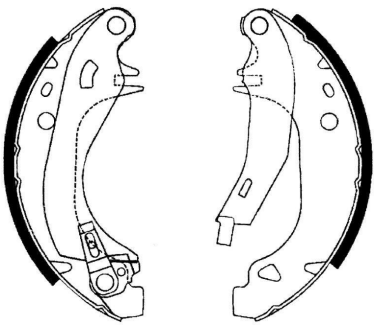

ø 180 x 32

91038800

DAIHATSU

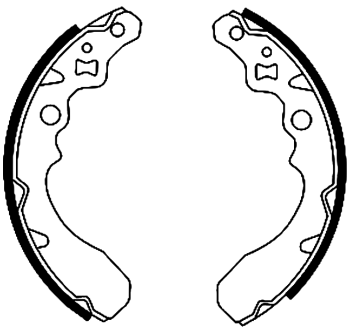

ø 165 x 26

91038900

DAIHATSU

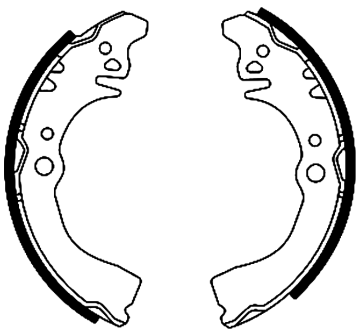

ø 180 x 27

91039001

DAIHATSU, ROVER, SUBARU, SUZUKI

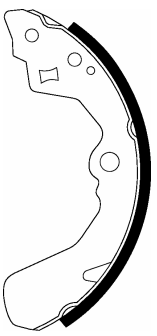

ø 200 x 32

91039400

BERTONE, DAIHATSU

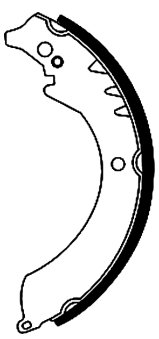

ø 254 x 46

91039500

NISSAN

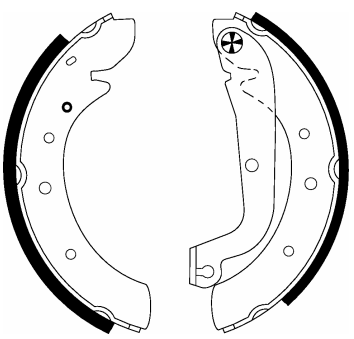

ø 254 x 57

91039601

HONDA

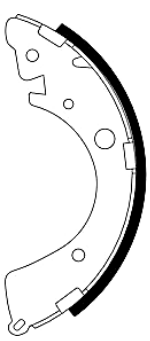

ø 200 x 36

91039700

FORD ASIA / OZEANIA, FORD AUSTRALIA, KIA

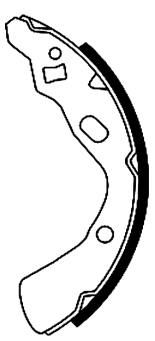

ø 170 x 26

91040100

ASIA MOTORS, KIA, MAZDA

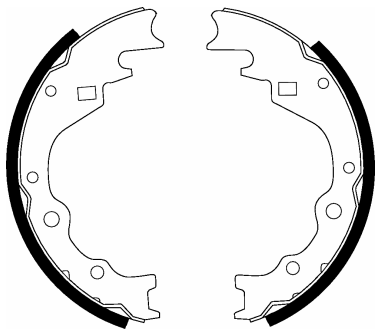

ø 260 x 51

91040300

MITSUBISHI

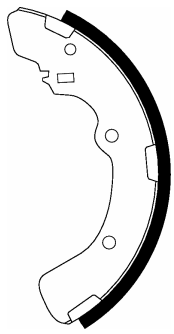

ø 254 x 52

91040400

NISSAN

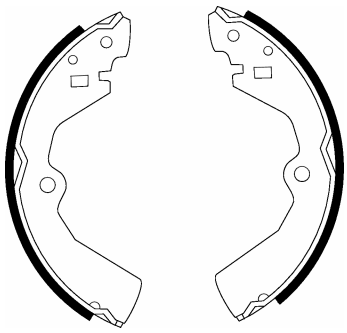

ø 228.6 x 41

91040500

NISSAN

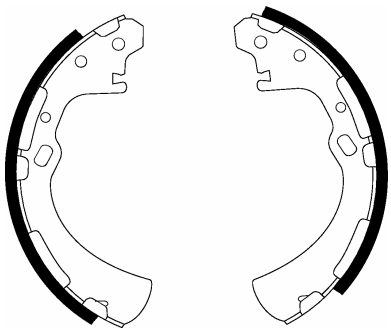

ø 260 x 50

91040900

SUBARU

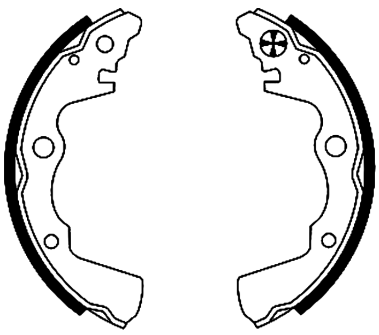

ø 180 x 31

91041200

SUZUKI

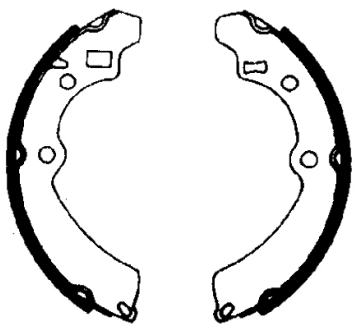

ø 220 x 40

91041300

FORD ASIA / OZEANIA, SUZUKI

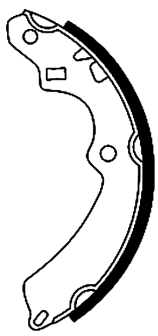

ø 220 x 40

91041500

TOYOTA

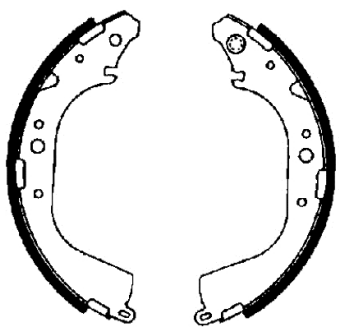

ø 295 x 50

91041600

TOYOTA

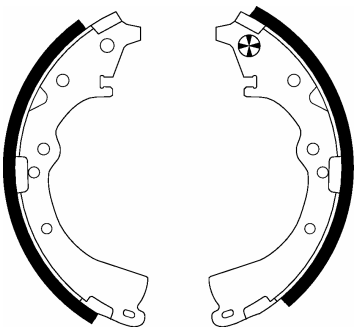

ø 254 x 52

91042300

HONDA, SUZUKI

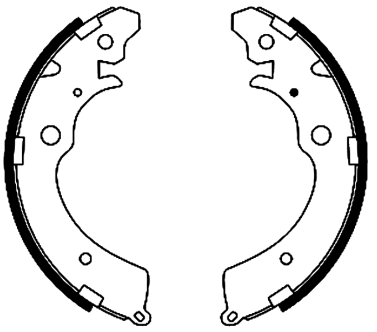

ø 220 x 36

91042600

SUZUKI



ø 180 x 26

91042700

TATA (TELCO)



ø 180 x 31

91043200

TOYOTA

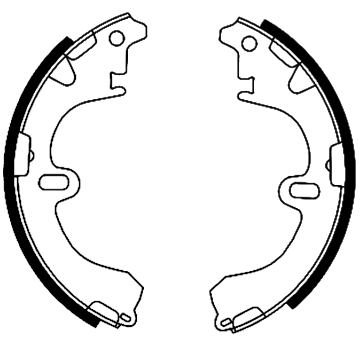

ø 200 x 36

91043600

OPEL, VAUXHALL

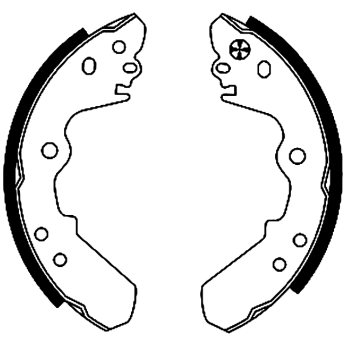

ø 254 x 52

91043700

FORD

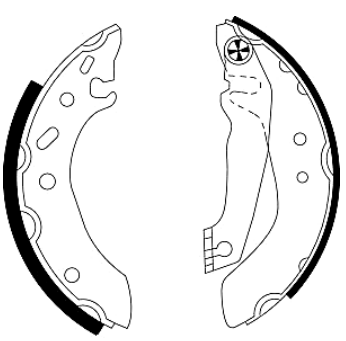

ø 180 x 32

91043800

FORD

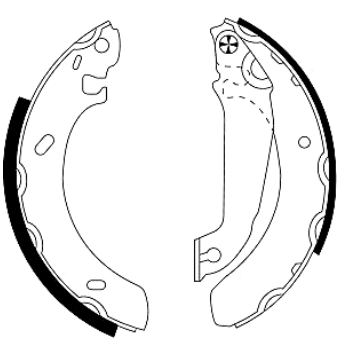

ø 203.2 x 38

91043900

HONDA, MG, ROVER

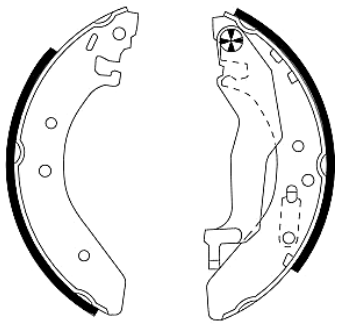

ø 203.2 x 38

91044000

BMW

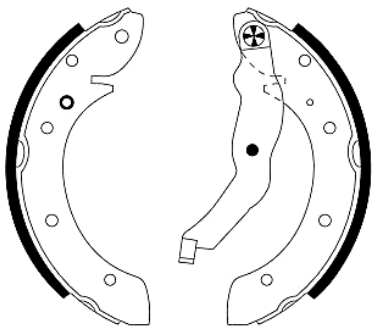

ø 228.6 x 41.5

91044100

FORD

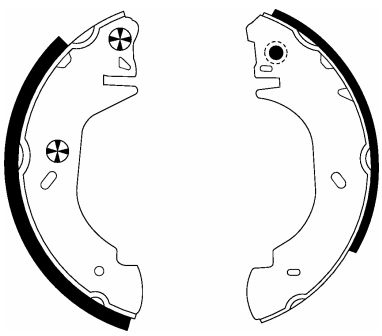

ø 254 x 52

91044201

FORD

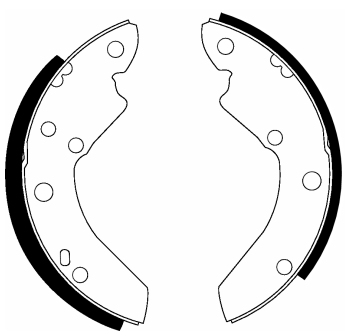

ø 280 x 65

91044300

MERCEDES-BENZ, NISSAN, SSANGYONG

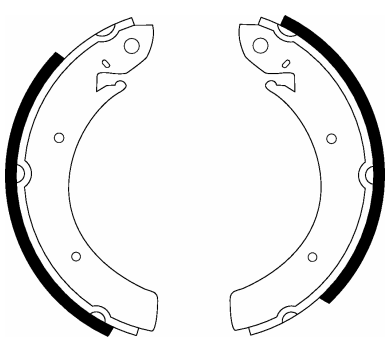

ø 254 x 57

91044400

SEAT, VOLKSWAGEN

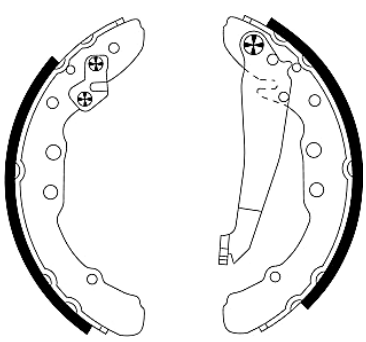

ø 230 x 40

91044500

MERCEDES-BENZ

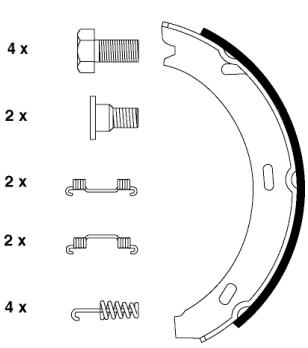

ø 164 x 25

91044600

VOLKSWAGEN

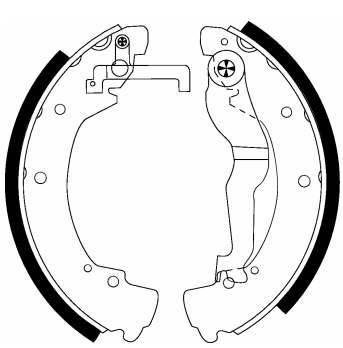

ø 268 x 56

91044700

AUDI, SEAT, SKODA, SKODA (SVW), VOLKSWAGEN

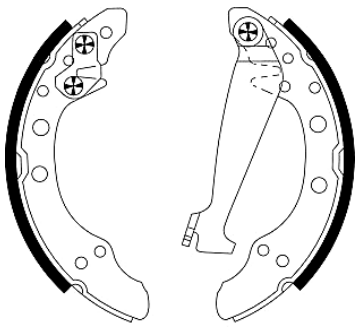

ø 200 x 40

91044800

CHEVROLET, HOLDEN, OPEL, VAUXHALL

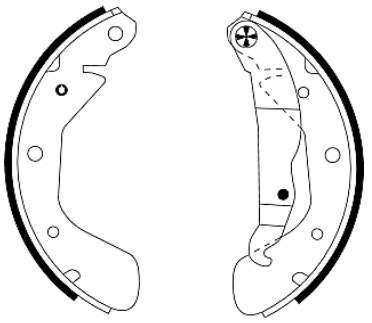

ø 200 x 28

91044900

BUICK, CHEVROLET, DAEWOO, FSO, OPEL, VAUXHALL, ZAZ

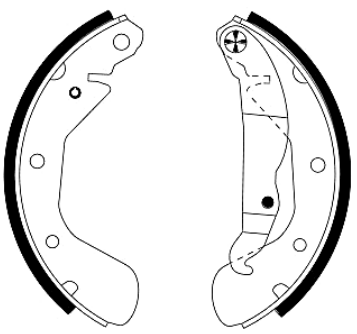

ø 200 x 45

91045200

CITROËN, PEUGEOT

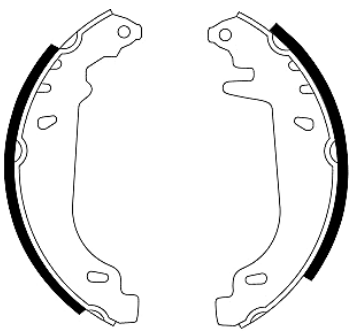

ø 180 x 32

91045300

NISSAN

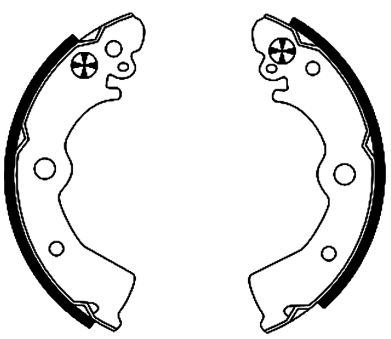

ø 180 x 31

91045500

BMW

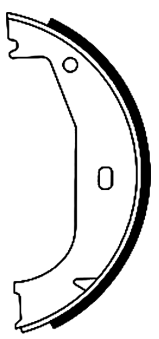

ø 160.5 x 25

91045801

MITSUBISHI, PROTON

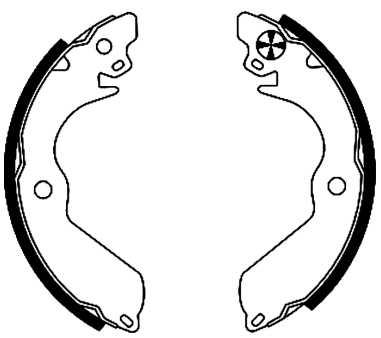

ø 180 x 37

91045901

CHEVROLET, SUBARU

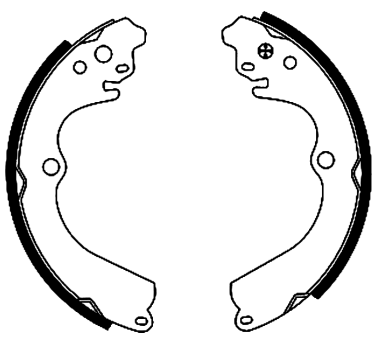

ø 228.6 x 36

91046000

VOLVO

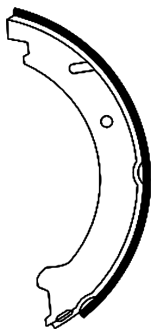

ø 177.8 x 25

91046100

FORD

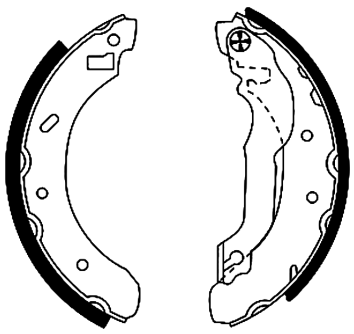

ø 228.6 x 45

91046500

ALFA ROMEO, FIAT, LANCIA

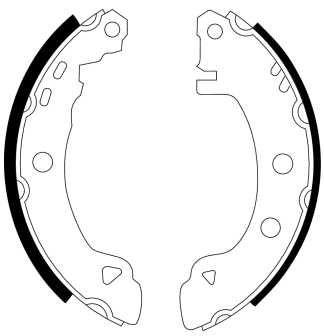

ø 203.2 x 39

91046600

FORD

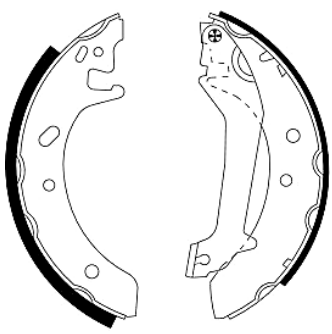

ø 203.2 x 38.5

91046900

TOYOTA

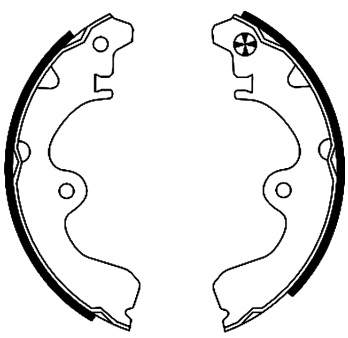

ø 180 x 28

91047100

MITSUBISHI

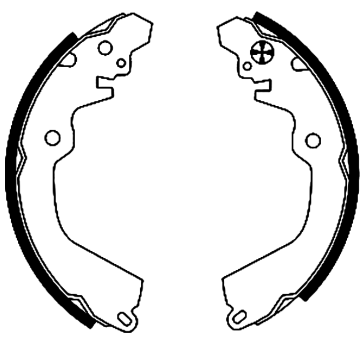

ø 203.2 x 37

91047200

NISSAN

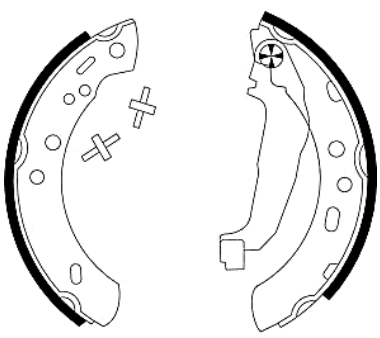

ø 180 x 27

91047400

MAZDA

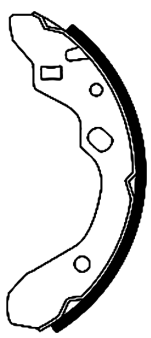

ø 200 x 36

91047500

HYUNDAI, MITSUBISHI

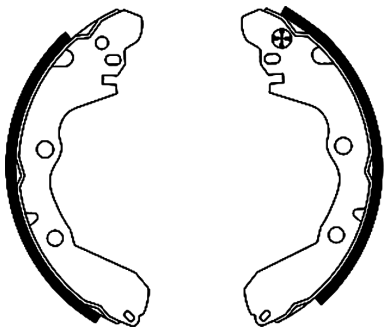

ø 228.6 x 42

91047800

CITROËN, FIAT, LANCIA, PEUGEOT

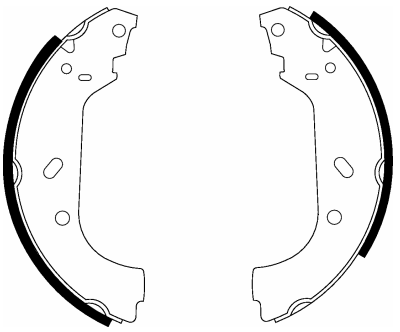

ø 255 x 61

91047900

CITROËN, FIAT, PEUGEOT

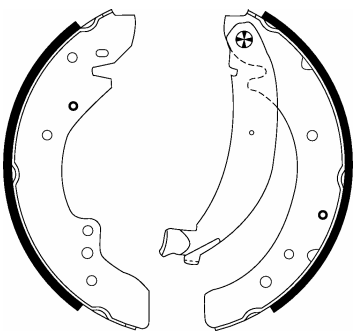

ø 254 x 57

91048000

CITROËN, DACIA, LADA, NISSAN, PEUGEOT, RENAULT

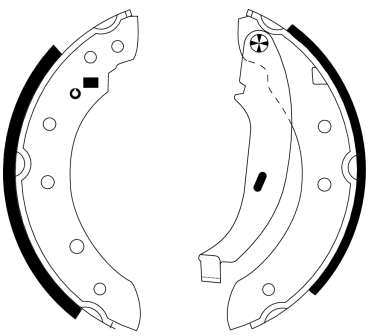

ø 203.2 x 38

91048100

LAND ROVER

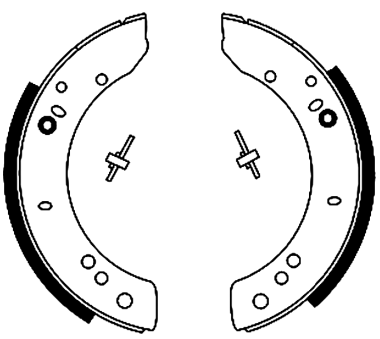

ø 279.4 x 57

91048200

TOYOTA

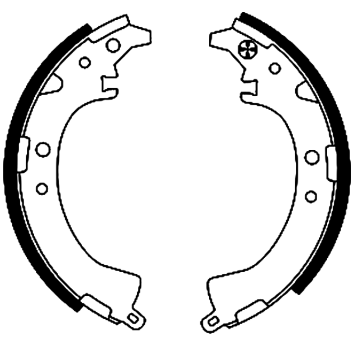

ø 228.6 x 42

91048400

FIAT

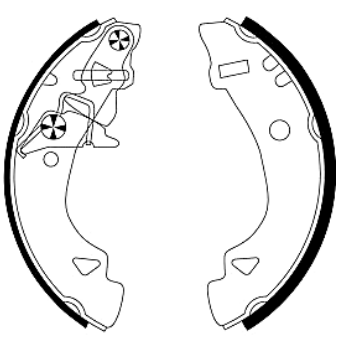

ø 185 x 31

91048500

FORD, FORD AUSTRALIA

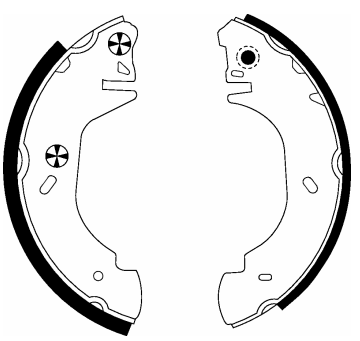

ø 254 x 52

91048600

FORD, FORD AUSTRALIA

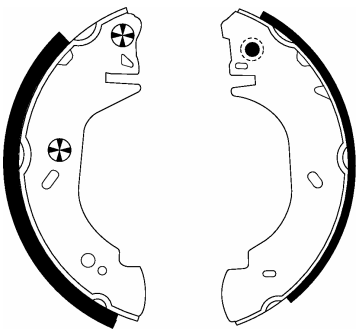

ø 280 x 65

91048800

FORD, FORD AUSTRALIA, MAZDA

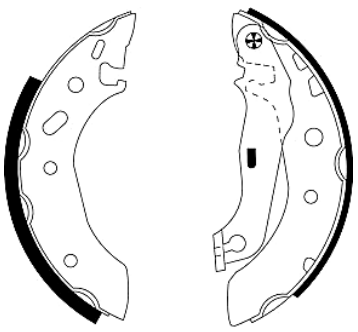

ø 180 x 32

91048900

FORD

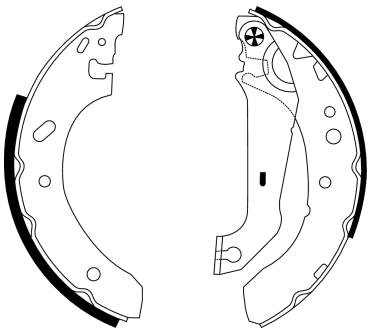

ø 203.2 x 38

91049000

OPEL, VAUXHALL

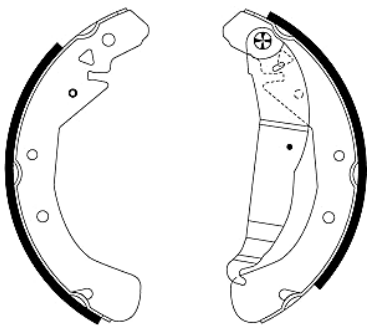

ø 230 x 42

91049100

FIAT, LANCIA

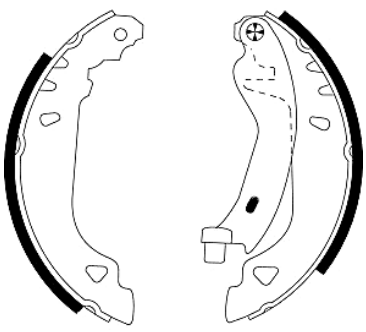

ø 180 x 32

91049200

FIAT, LANCIA

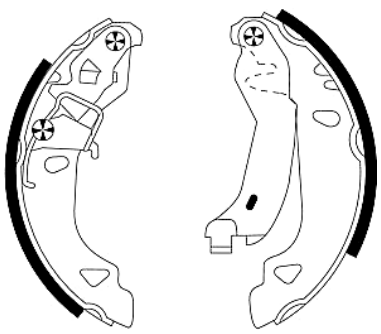

ø 180 x 32

91049300

ALPINA, BMW, BMW (BRILLIANCE), MINI

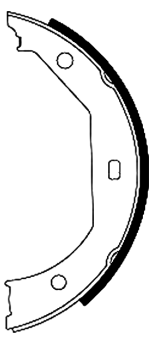

ø 185 x 20

91049400

FORD, FORD AUSTRALIA

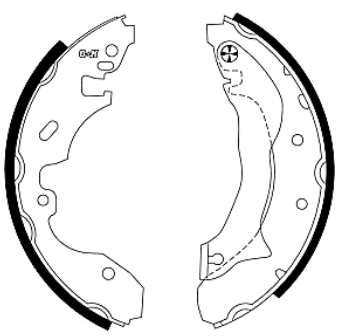

ø 228.6 x 45

91049500

RENAULT

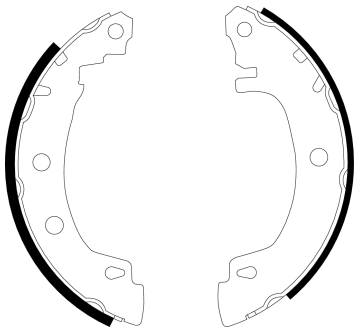

ø 203.2 x 39

91049600

CITROËN, FIAT, PEUGEOT

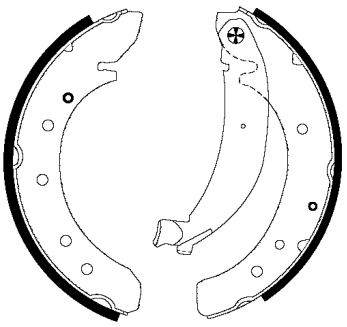

ø 254 x 57

91049700

OPEL, RENAULT, VAUXHALL

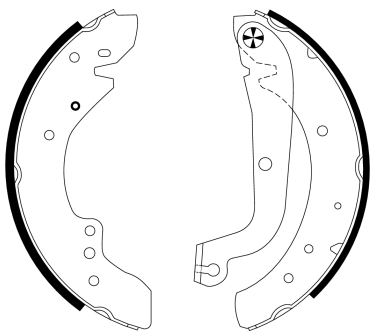

ø 254 x 57

91049900

OPEL, RENAULT

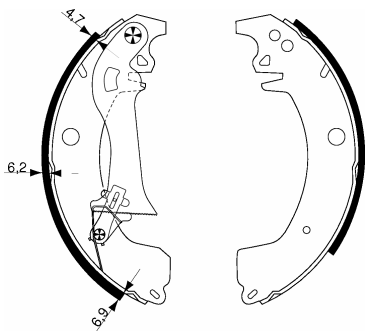

ø 255 x 45

91050000

RENAULT

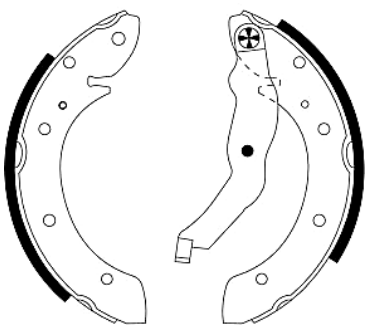

ø 228.6 x 41.5

91050200

KIA, MAZDA

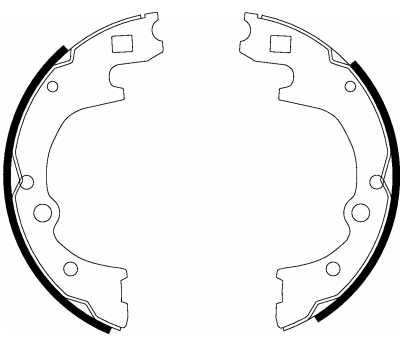

ø 220 x 56.5

91050400

NISSAN

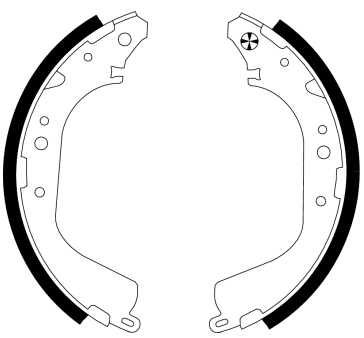

ø 295 x 62

91050500

MITSUBISHI

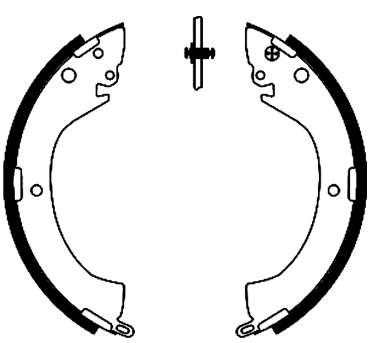

ø 254 x 52

91050600

MITSUBISHI

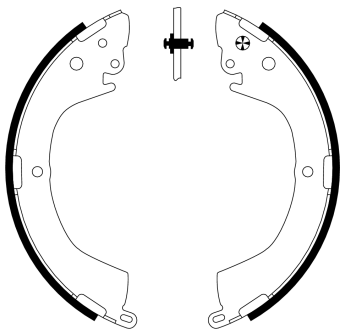

ø 270 x 53

91050700

MITSUBISHI

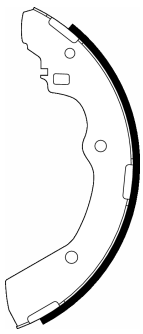

ø 270 x 53

91050800

SUBARU

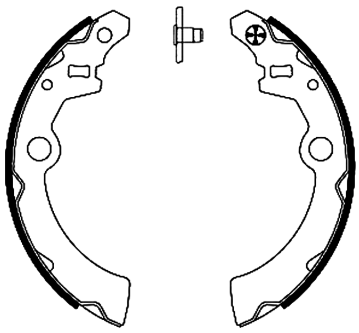

ø 180 x 31

91050900

TOYOTA

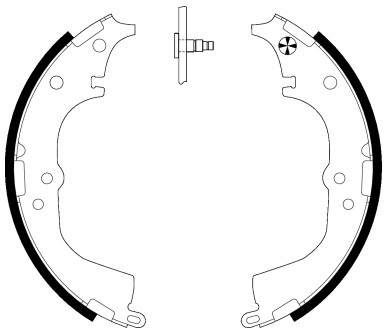

ø 270 x 57

91051000

DAIHATSU, HUALI, TOYOTA, TOYOTA (FAW)

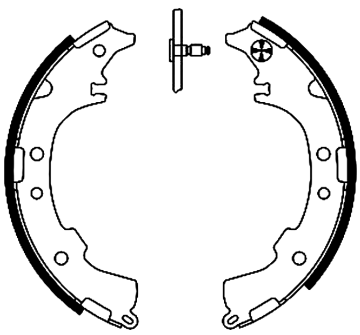

ø 228.6 x 41.5

91051100

TOYOTA

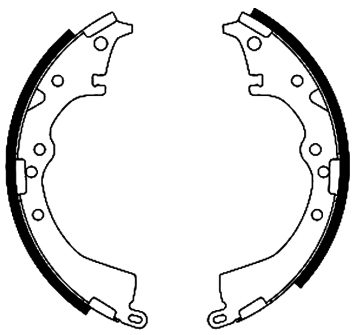

ø 254 x 51

91051300

SUZUKI

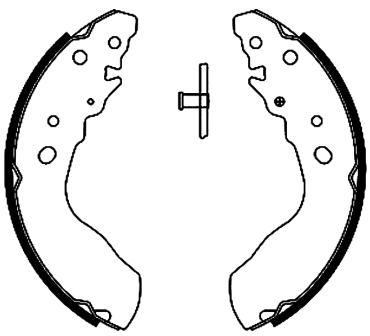

ø 254 x 47

91051400

SUZUKI

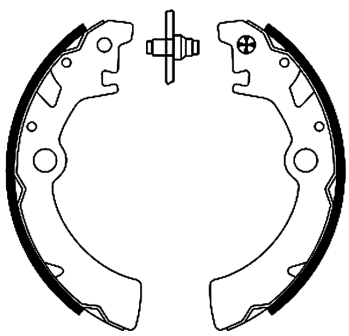

ø 180 x 26

91051500

FORD

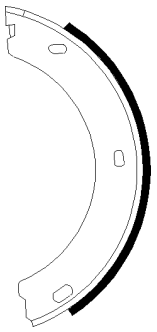

ø 203.2 x 38

91051700

TOYOTA



ø 279.4 x 52

91052300

HYUNDAI

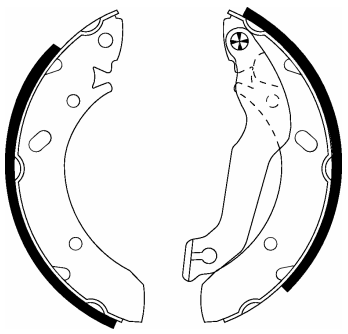

ø 203.2 x 39

91052400

SEAT, SKODA, VOLKSWAGEN

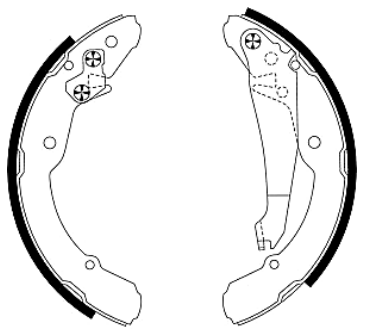

ø 230 x 32

91052500

FORD, FORD AUSTRALIA

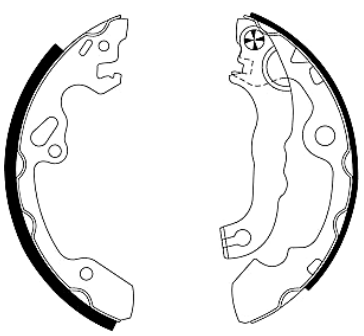

ø 203.2 x 38

91052600

PEUGEOT

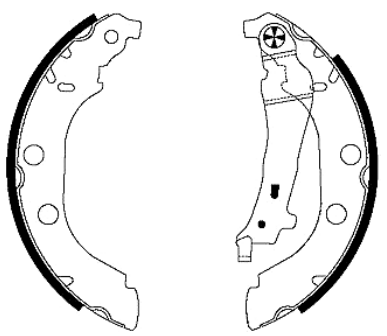

ø 228.6 x 42

91052700

NISSAN, RENAULT

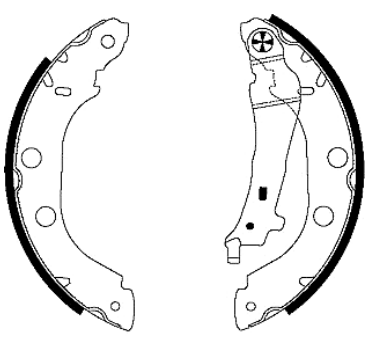

ø 228.6 x 42

91052800

NISSAN, RENAULT

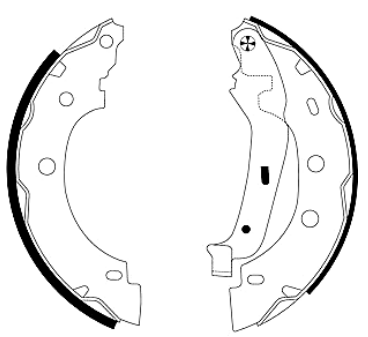

ø 203.2 x 37

91052900

CITROËN, PEUGEOT

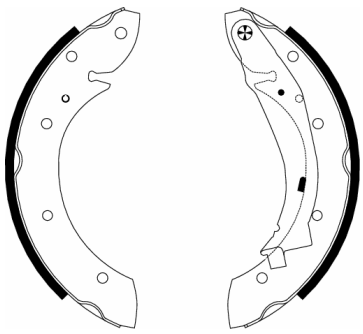

ø 228.6 x 41.5

91053000

MERCEDES-BENZ

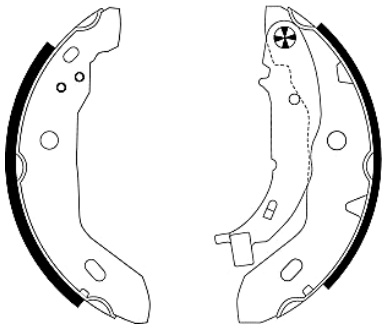

ø 180 x 42

91053100

FIAT

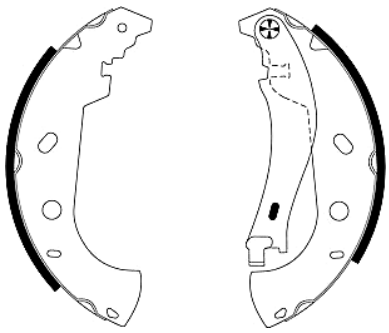

ø 228.6 x 42

91053200

MAZDA

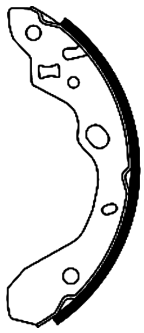

ø 200 x 36

91053300

BMW, BMW (BRILLIANCE)

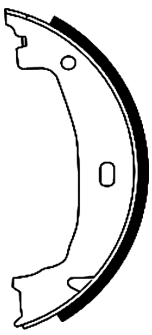

ø 160.5 x 20

91053400

TOYOTA

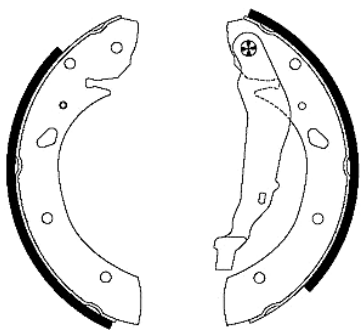

ø 228.6 x 35

91053500

DAIHATSU, TOYOTA

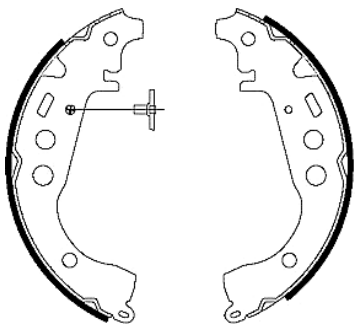

ø 200 x 32

91053600

FIAT

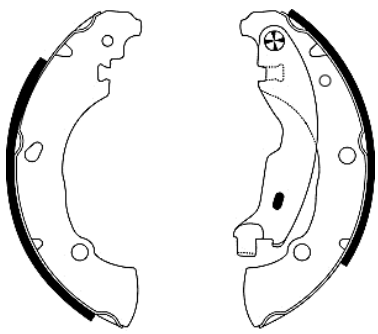

ø 203.2 x 38

91053700

DACIA, FORD, NISSAN, RENAULT

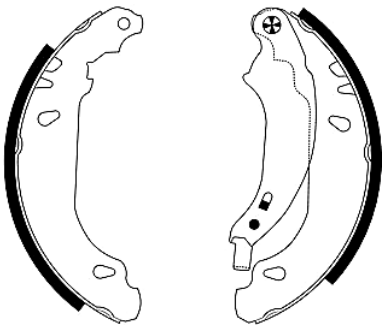

ø 180 x 42

91053800

PEUGEOT

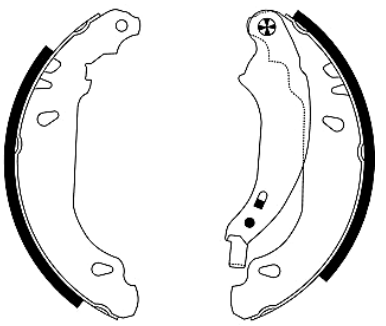

ø 180 x 32

91053900

PEUGEOT, RENAULT

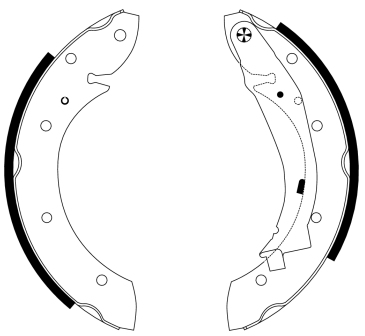

ø 228.6 x 41.5

91054000

CHEVROLET, DAEWOO, PONTIAC, PROTON

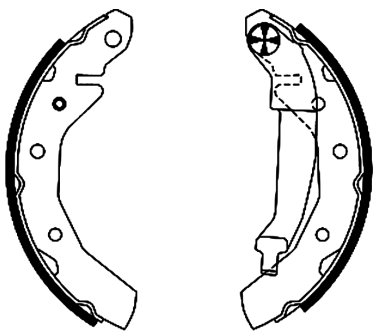

ø 180 x 31

91054100

HYUNDAI

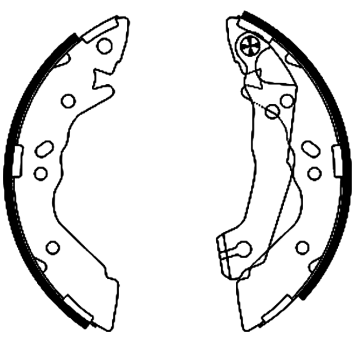

ø 180 x 31.7

91054200

DAEWOO

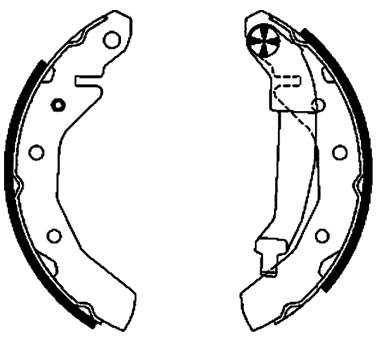

ø 180 x 31

91054300

FIAT, ZASTAVA

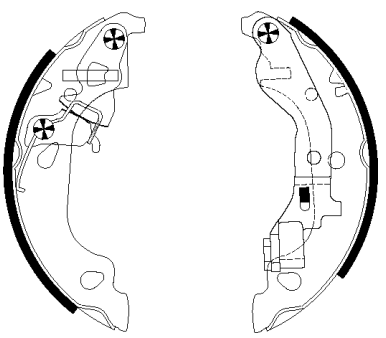

ø 180 x 32

91054400

FIAT, ZASTAVA

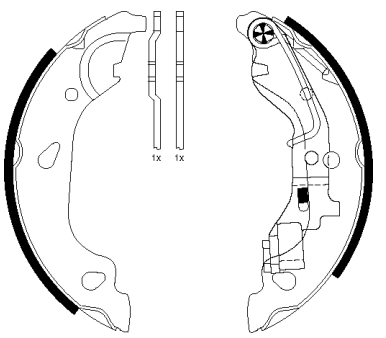

ø 180 x 32

91054500

OPEL, RENAULT, VAUXHALL

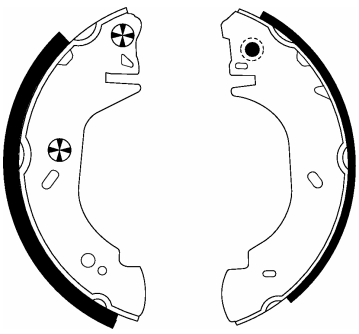

ø 280 x 65

91054600

MERCEDES-BENZ

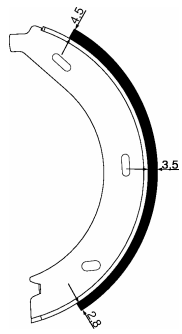

ø 178 x 20

91054700

CITROËN, FIAT, LANCIA, PEUGEOT

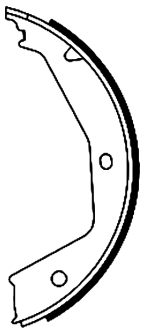

ø 180 x 31

91054800

PEUGEOT



ø 180 x 30

91055100

MERCEDES-BENZ, VOLKSWAGEN

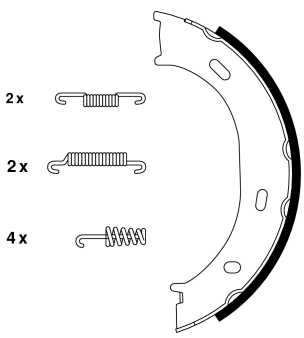

ø 160 x 40

91055200

HONDA

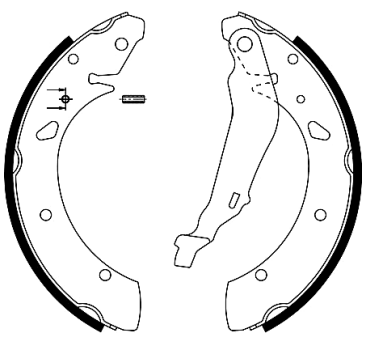

ø 228.6 x 42

91055300

HYUNDAI, MITSUBISHI

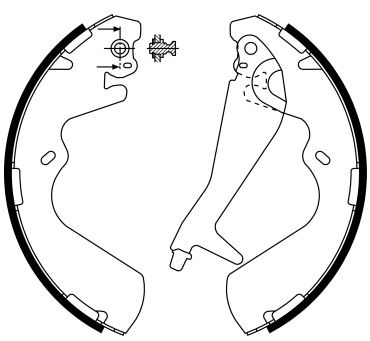

ø 270 x 53

91055400

SUBARU

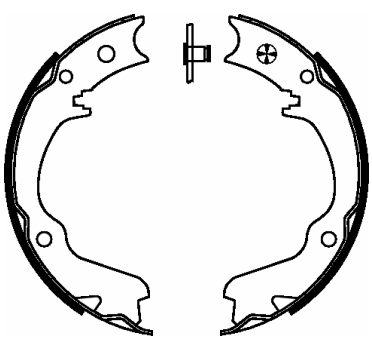

ø 170 x 32

91055500

MAZDA

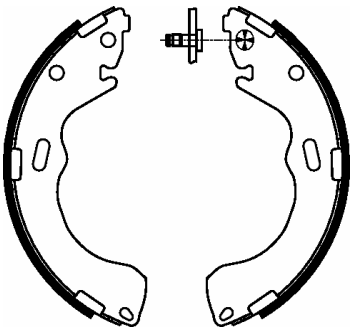

ø 228.6 x 43

91055600

LAND ROVER

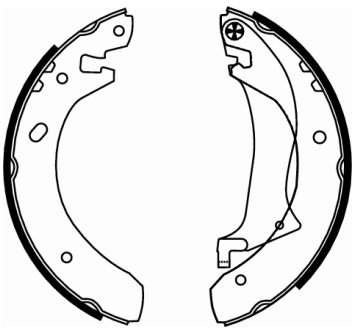

ø 254 x 38

91055700

LAND ROVER

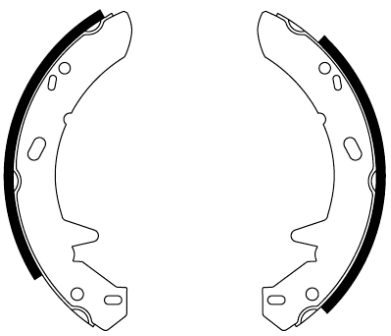

ø 254 x 70

91055800

LDV, NISSAN

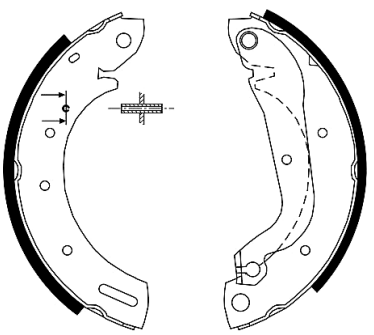

ø 254 x 57

91055900

KIA

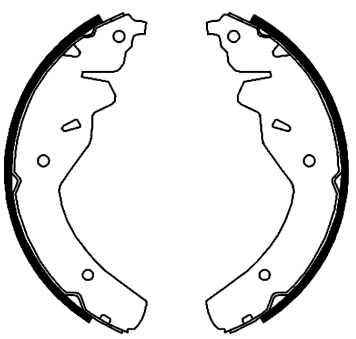

ø 250 x 57

91056000

CHRYSLER, DODGE, KIA, PLYMOUTH

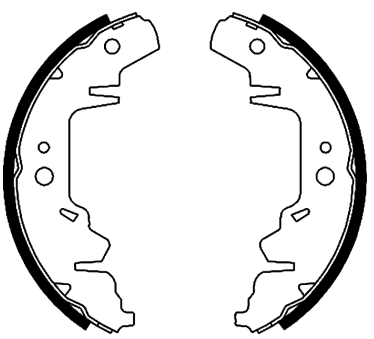

ø 250 x 57

91056100

KIA

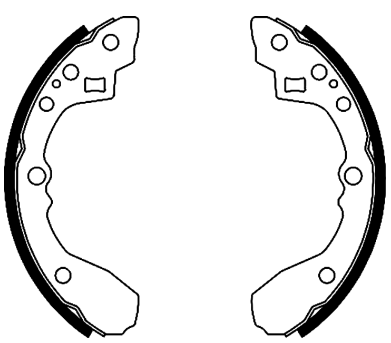

ø 200 x 36

91056200

INFINITI, NISSAN

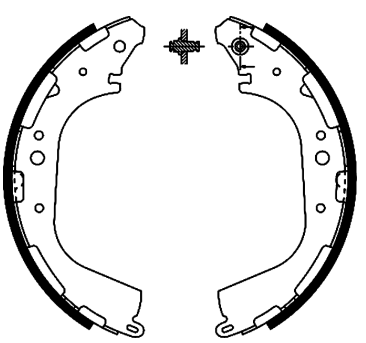

ø 295 x 52

91056300

KIA, MAZDA

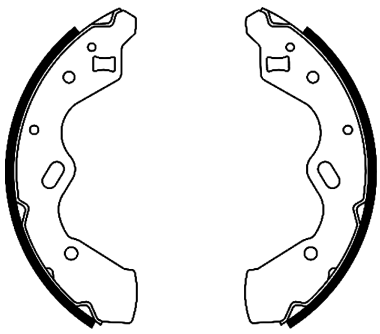

ø 200 x 32

91056400

MITSUBISHI

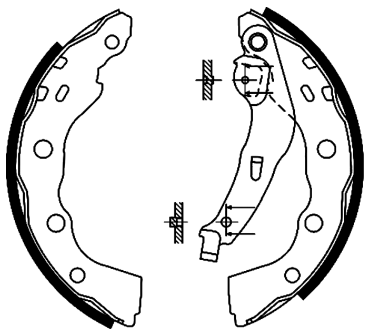

ø 203.2 x 39

91056500

JEEP

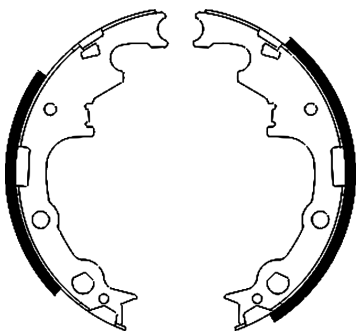

ø 228.6 x 66

91056600

CITROËN, PEUGEOT

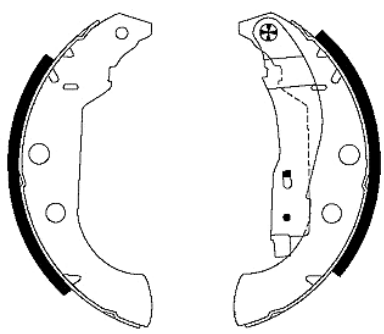

ø 228.6 x 42

91056700

TOYOTA

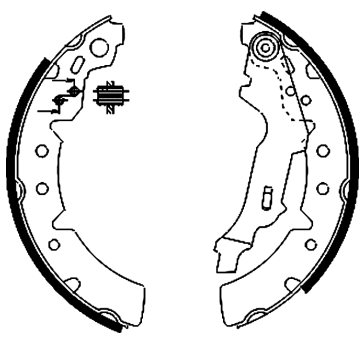

ø 200 x 37

91056800

DODGE, HYUNDAI

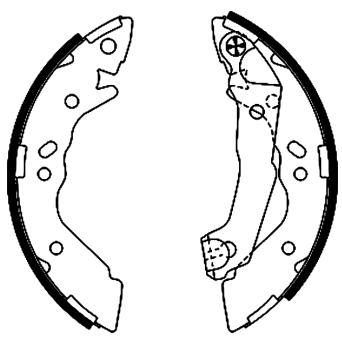

ø 180 x 32

91056900

MITSUBISHI

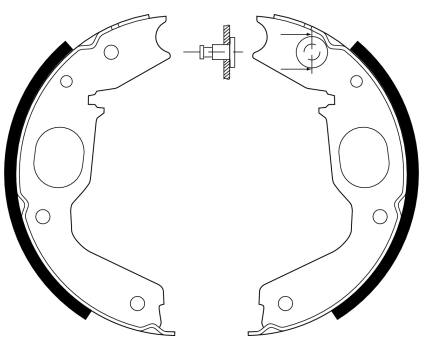

ø 197 x 40

91057100

CHRYSLER, MERCEDES-BENZ

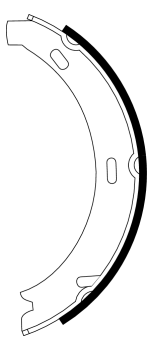

ø 164 x 20

91057200

MERCEDES-BENZ

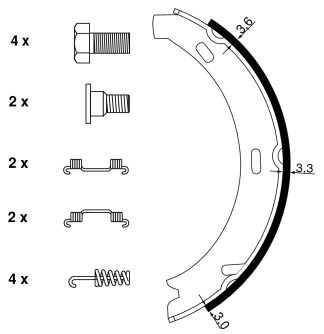

ø 164 x 25

91057300

FORD, FORD AUSTRALIA, MAZDA

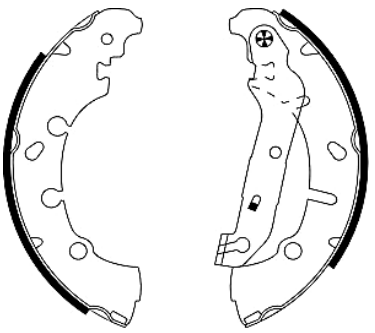

ø 203.2 x 38

91057400

SMART

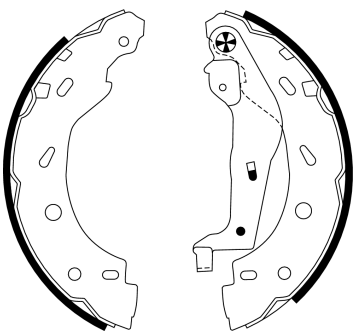

ø 203.2 x 32

91057500

DAIHATSU, PERODUA

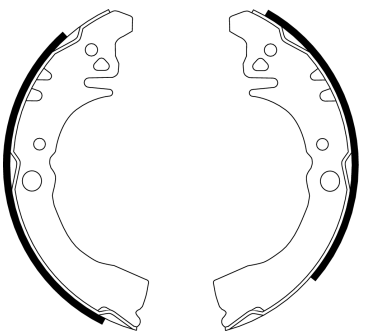

ø 180 x 31

91057600

SUZUKI

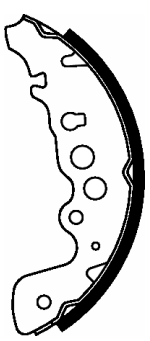

ø 220 x 40

91057700

FORD ASIA / OZEANIA, FORD AUSTRALIA, MAZDA

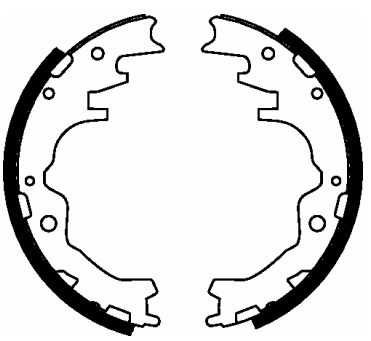

ø 260 x 51

91057800

CHRYSLER, CHRYSLER (BBDC), LANCIA, MERCEDES-BENZ

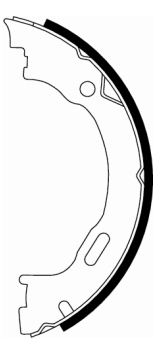

ø 183 x 31

91057900

HYUNDAI, MERCEDES-BENZ, VOLKSWAGEN

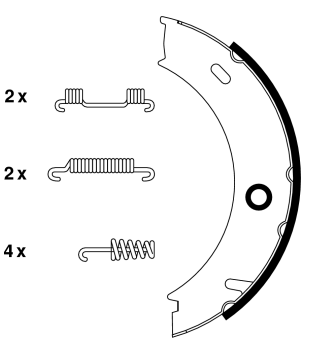

ø 170 x 40

91058000

OPEL, SUZUKI, VAUXHALL

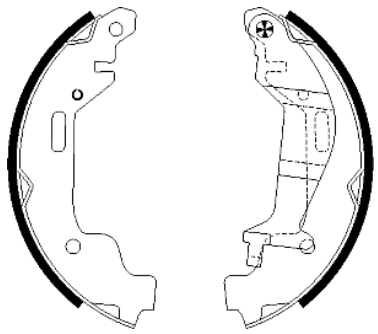

ø 180 x 26

91058100

OPEL, VAUXHALL

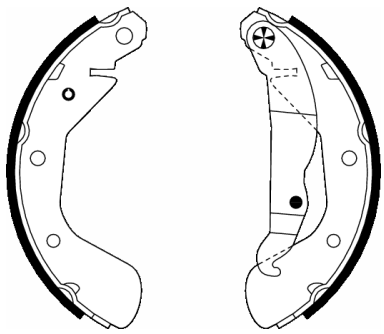

ø 200 x 29

91058200

HOLDEN, OPEL, VAUXHALL

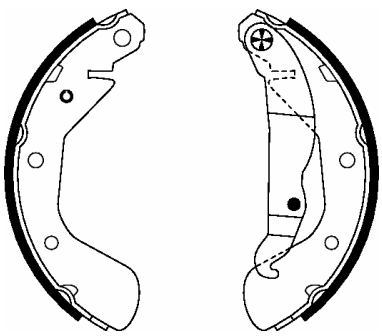

ø 200 x 46

91058300

NISSAN

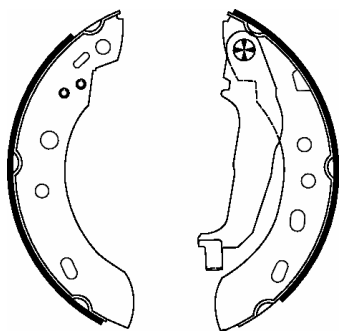

ø 180 x 27

91058400

MAZDA

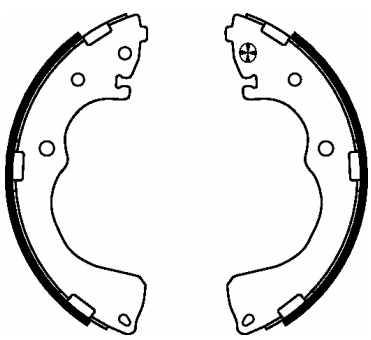

ø 254 x 52

91058500

CHEVROLET, SUZUKI

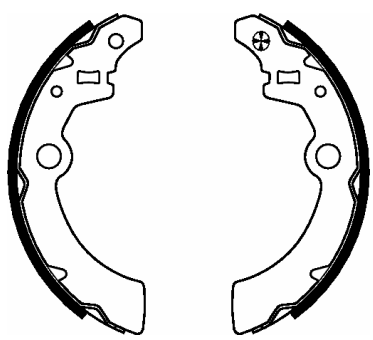

ø 180 x 26

91058600

FORD, FORD AUSTRALIA, LDV, MAXUS (SAIC MOTOR)

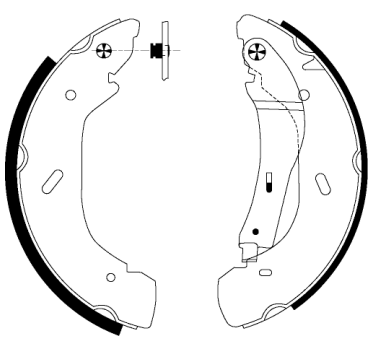

ø 280 x 65

91058700

ALPINA, BMW, BMW (BRILLIANCE), ROLLS-ROYCE, VOLKSWAGEN

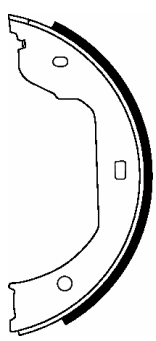

ø 185 x 30

91058800

MAYBACH, MERCEDES-BENZ, MERCEDES-BENZ (BBDC)

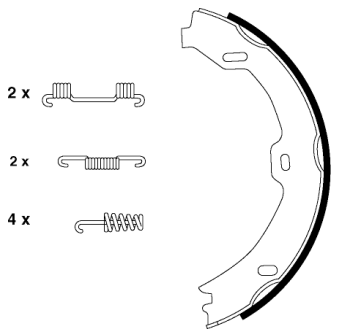

ø 180 x 25

91058900

MERCEDES-BENZ

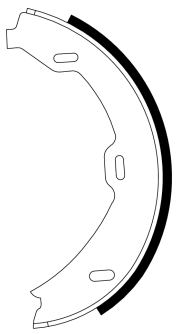

ø 180 x 25

91059000

IVECO, RENAULT TRUCKS

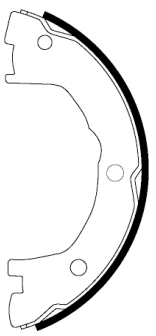

ø 172 x 42

91059100

FORD, FORD AUSTRALIA

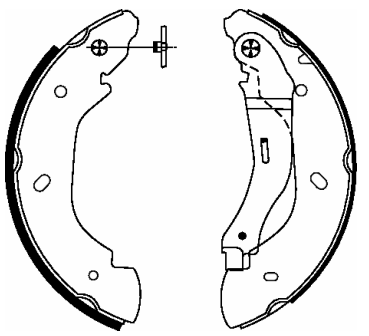

ø 254 x 52

91059200

HOLDEN, OPEL, VAUXHALL

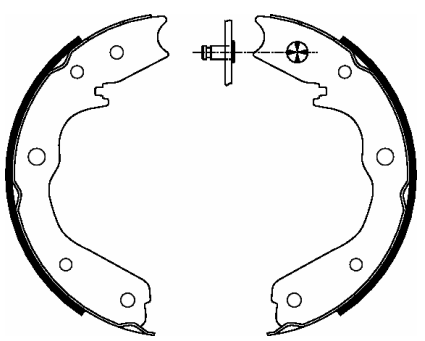

ø 210 x 32

91059300

DAIHATSU

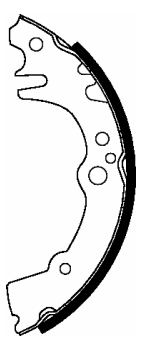

ø 180 x 28

91059400

LEXUS, TOYOTA

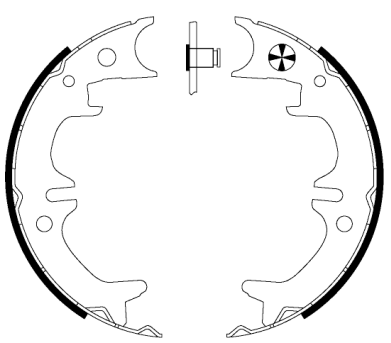

ø 170 x 40

91059500

HYUNDAI

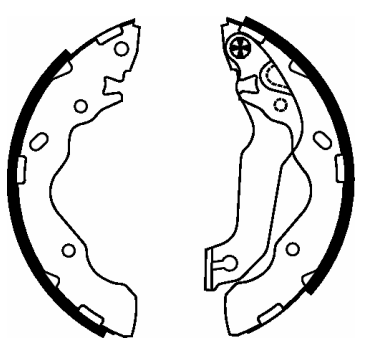

ø 203.2 x 38

91059600

DODGE, HYUNDAI

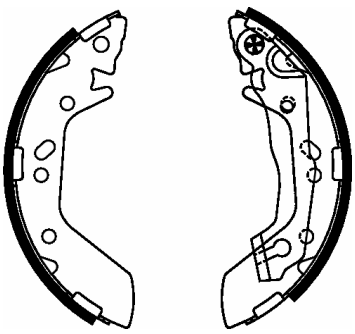

ø 180 x 35

91059700

DAIHATSU

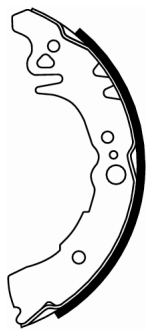

ø 180 x 38

91059800

CITROËN, CITROËN (DF-PSA), PEUGEOT

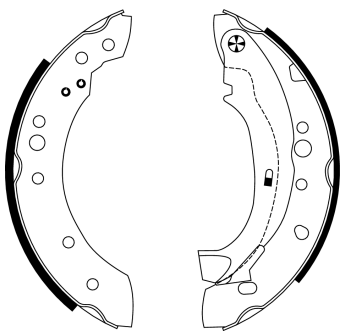

ø 203.2 x 38

91059900

FIAT

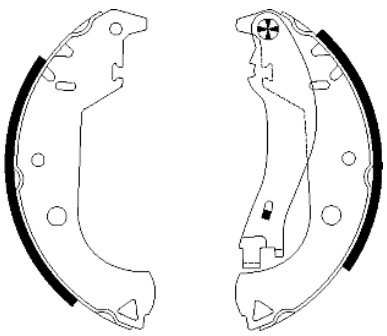

ø 228.6 x 42

91060000

FORD, FORD AUSTRALIA

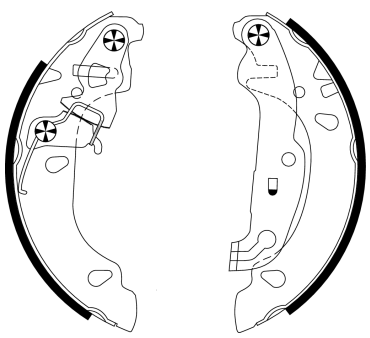

ø 180 x 32

91060100

HOLDEN, OPEL, VAUXHALL

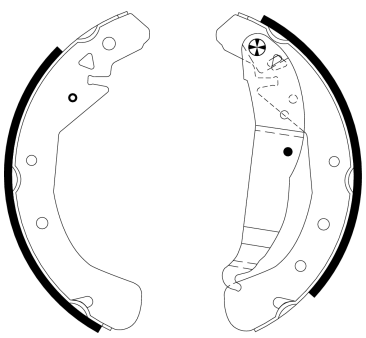

ø 230 x 42

91060200

DACIA, LADA, NISSAN, RENAULT

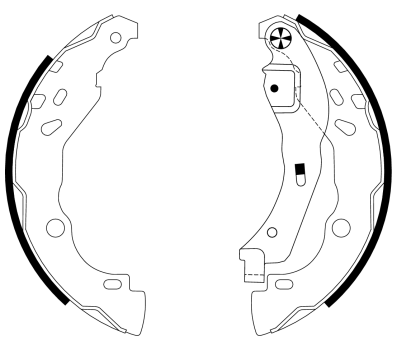

ø 203.2 x 38

91060300

MG, ROEWE (SAIC), ROVER

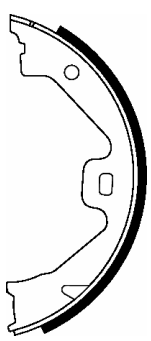

ø 160 x 20

91060400

HONDA

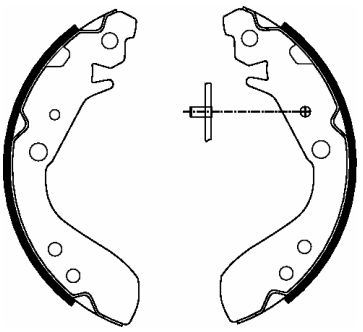

ø 180 x 32

91060500

LEXUS, TOYOTA

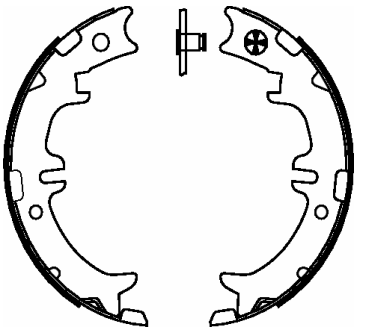

ø 190 x 45

91060600

FORD, FORD AUSTRALIA, FORD USA, MAZDA

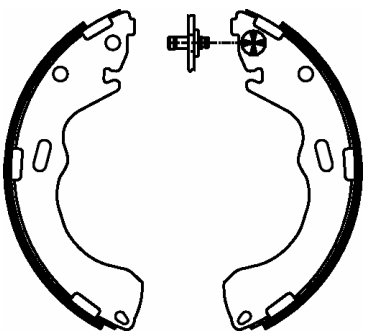

ø 228.6 x 43

91060700

DAIHATSU

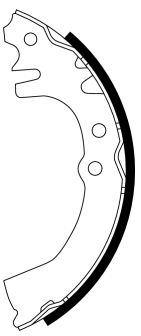

ø 165 x 28

91060800

PORSCHE

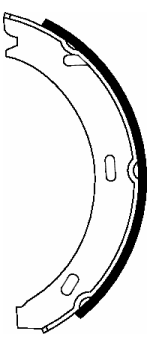

ø 164 x 20

91060900

CITROËN, FIAT, PEUGEOT

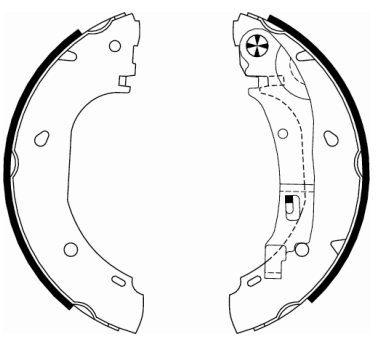

ø 254 x 57

91061000

FIAT

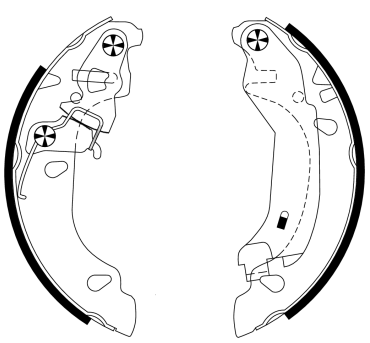

ø 180 x 32

91061100

FIAT, LANCIA

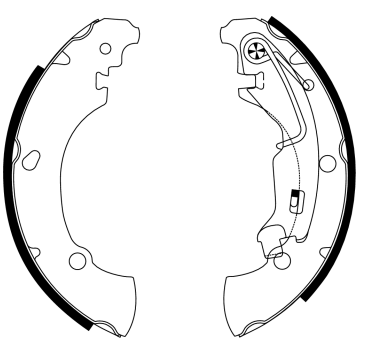

ø 203.2 x 38

91061200

KIA

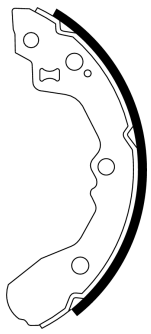

ø 200 x 26

91061400

FORD

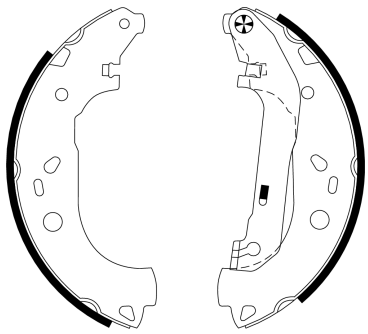

ø 228.6 x 57

91061500

FIAT

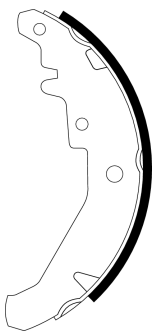

ø 185 x 29

91061600

CITROËN, CITROËN (DF-PSA), LANCIA, PEUGEOT

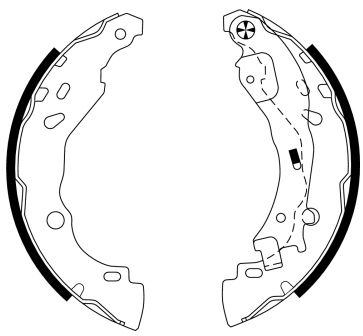

ø 203.2 x 37

91061700

HYUNDAI

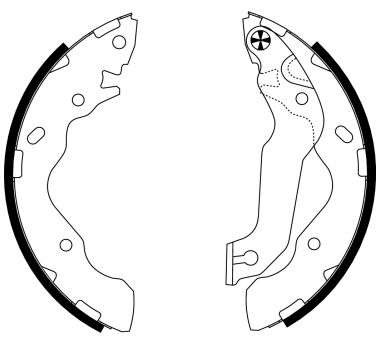

ø 203.2 x 37

91061800

PEUGEOT

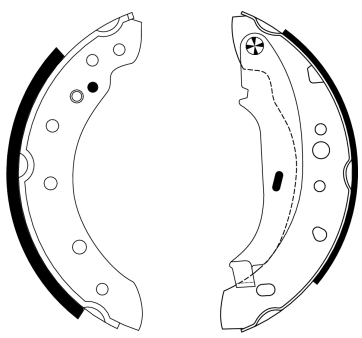

ø 203.2 x 38

91061900

MERCEDES-BENZ, MERCEDES-BENZ (FJDA)

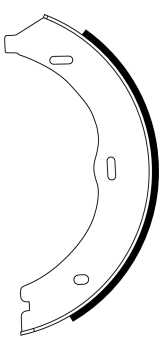

ø 186 x 20

91062000

FIAT, LANCIA, VAUXHALL

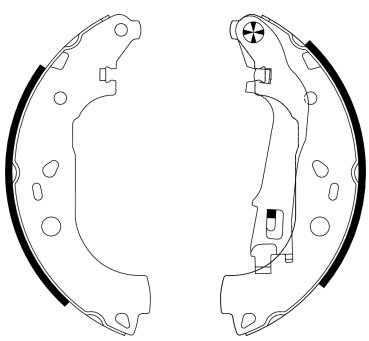

ø 228.6 x 42

91062100

CITROËN, FIAT, PEUGEOT

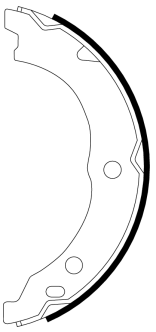

ø 172 x 42

91062200

VOLVO

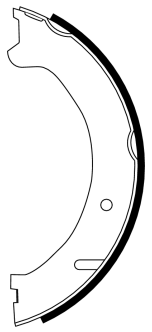

ø 177.8 x 25

91062300

VOLVO

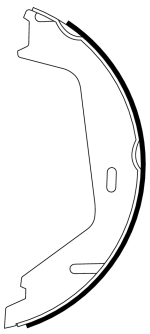

ø 178 x 25

91062400

AUDI, LAND ROVER, MERCEDES-BENZ, PORSCHE, VOLKSWAGEN

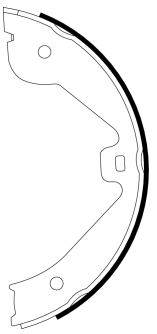

ø 210 x 30

91062500

CHEVROLET, CHEVROLET (SGM), DAEWOO, HOLDEN

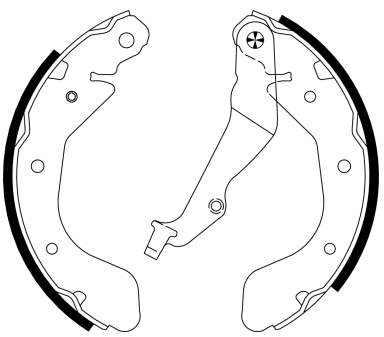

ø 200 x 35

91062600

NISSAN, RENAULT

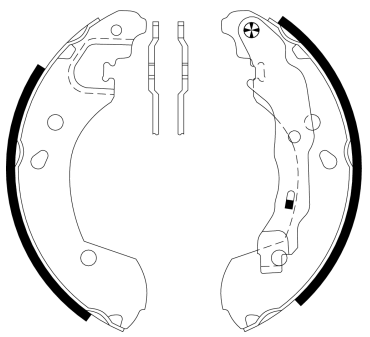

ø 203.2 x 36.5

91062700

NISSAN

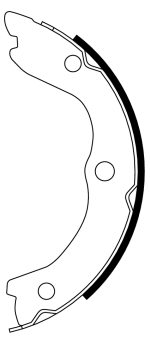

ø 172 x 22

91062800

HONDA

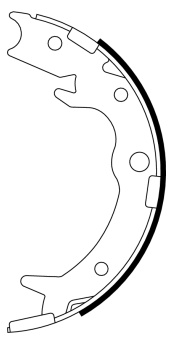

ø 167.4 x 35

91062900

MITSUBISHI

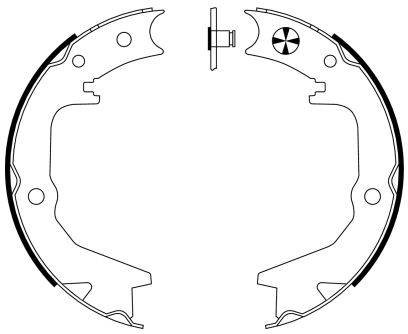

ø 167 x 32

91063000

MITSUBISHI, MITSUBISHI (BJC), PROTON

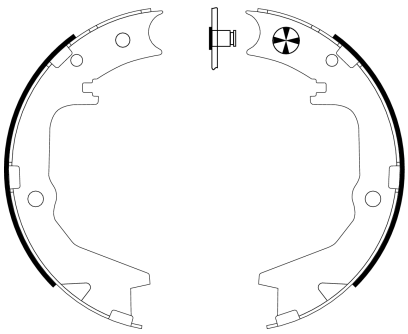

ø 167 x 32

91063100

TOYOTA

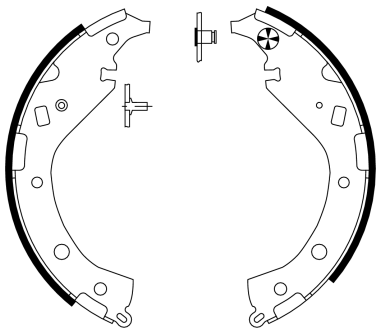

ø 228.6 x 41.5

91063200

TOYOTA, TOYOTA (FAW)

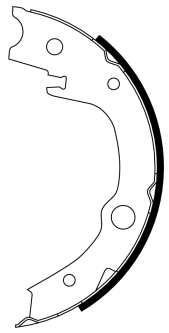

ø 170 x 32

91063300

HYUNDAI, INOKOM

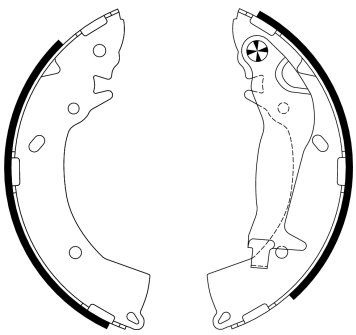

ø 203.2 x 31

91063400

OPEL, VAUXHALL

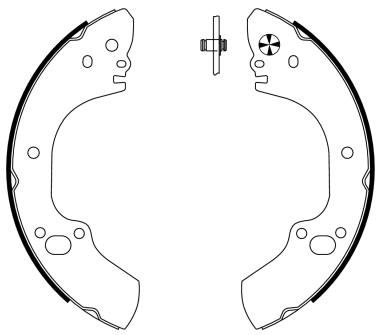

ø 294 x 47

91063500

PORSCHE

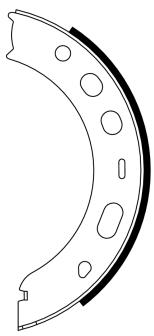

ø 180 x 25

91063600

LAND ROVER

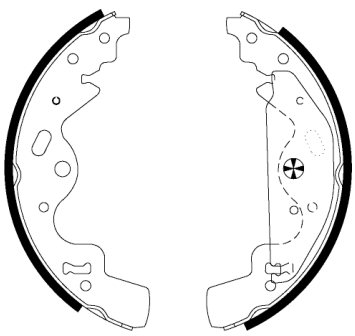

ø 254 x 45

91063700

FORD, FORD ASIA / OZEANIA, FORD AUSTRALIA, MAZDA

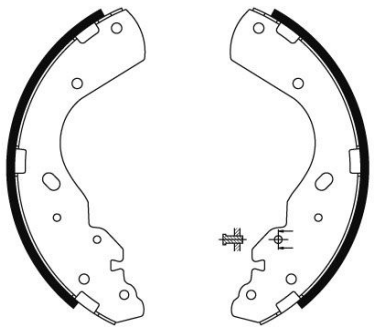

ø 295 x 56

91063800

CHRYSLER, DODGE, PLYMOUTH

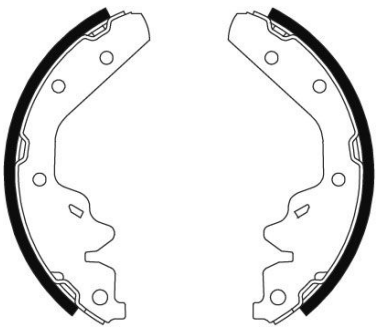

ø 200 x 34

91064100

KIA

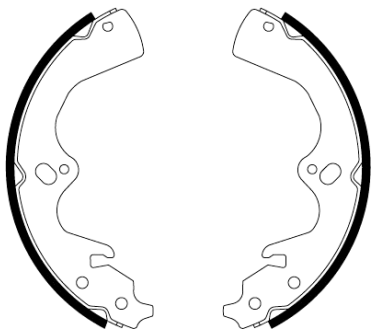

ø 260 x 46

91064200

CHRYSLER

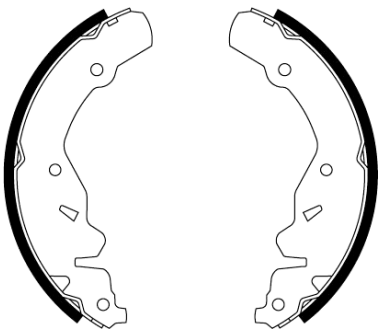

ø 220 x 42

91064300

OPEL, VAUXHALL

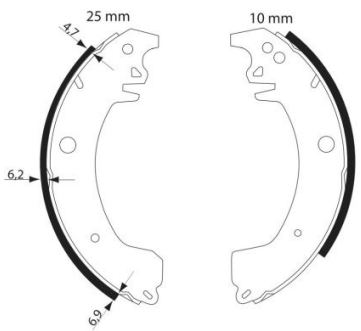

ø 255 x 46

91064400

NISSAN

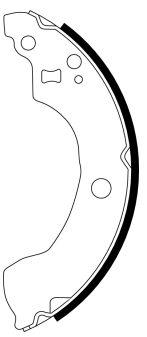

ø 203.2 x 36.5

91064500

CITROËN, OPEL, PEUGEOT, SUZUKI, TOYOTA, VAUXHALL

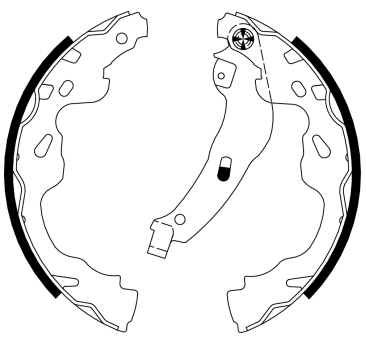

ø 200 x 32

91064600

FIAT, FORD

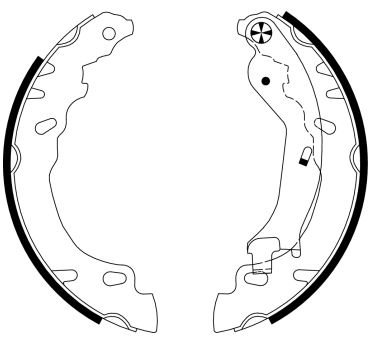

ø 180 x 32

91064700

FIAT

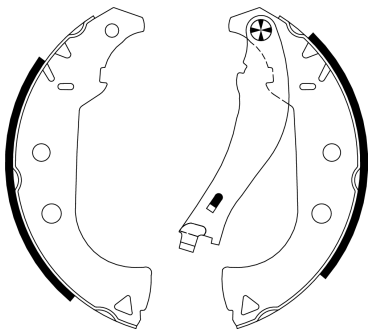

ø 228.6 x 42

91064800

CITROËN, FIAT, PEUGEOT

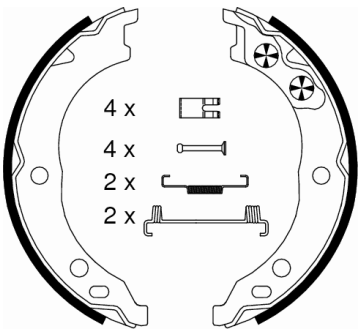

ø 172 x 42

91064900

FORD, FORD AUSTRALIA

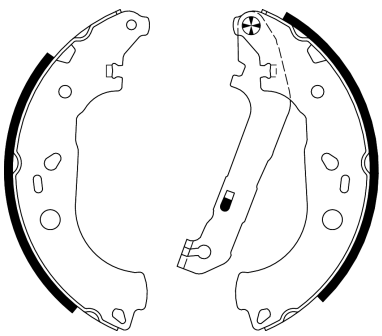

ø 228.6 x 42

91065000

KIA

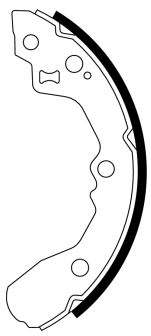

ø 200 x 31

91065100

NISSAN

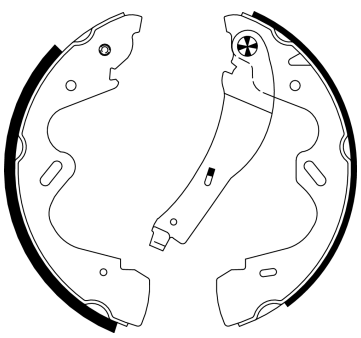

ø 280 x 65

91065200

CHEVROLET, HOLDEN, OPEL, SUBARU, SUZUKI, VAUXHALL

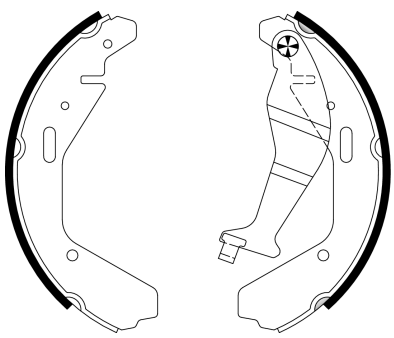

ø 200 x 29

91065300

CHRYSLER, CITROËN, FIAT, LANCIA, OPEL, PEUGEOT, VAUXHALL

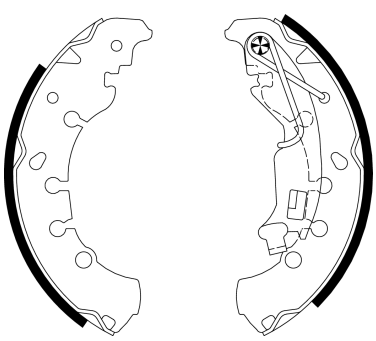

ø 203.2 x 38

91065400

FIAT, OPEL, VAUXHALL

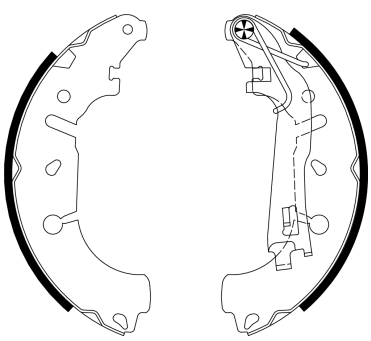

ø 228.6 x 42

91065500

DAIHATSU, PERODUA

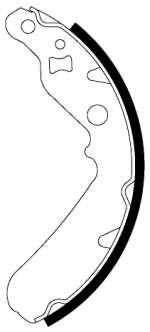

ø 165 x 26

91065600

DAIHATSU, TOYOTA

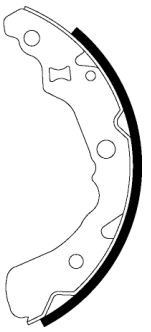

ø 180 x 31

91065700

KIA

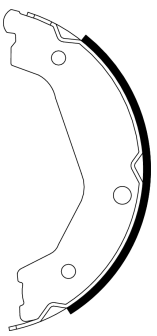

ø 190 x 40

91065800

KIA

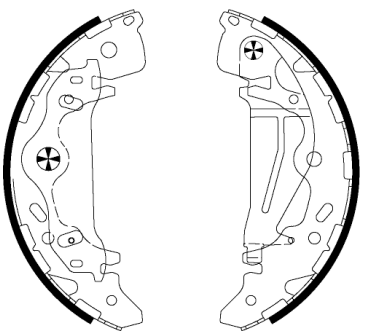

ø 295 x 53

91065900

NISSAN

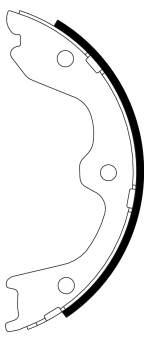

ø 172 x 32

91066000

MITSUBISHI

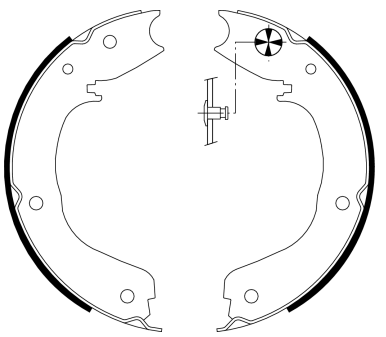

ø 199 x 34

91066100

CHANGAN (CHANA), LEXUS, TOYOTA, TOYOTA (FAW)

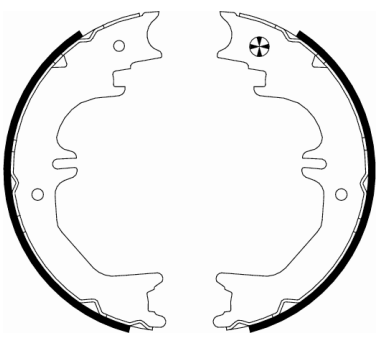

ø 215 x 45

91066200

LEXUS, TOYOTA

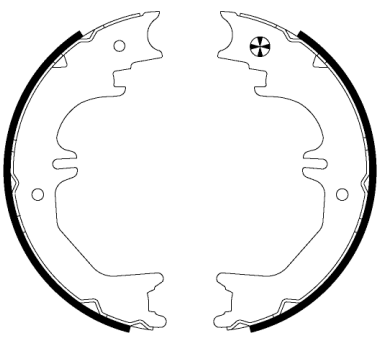

ø 230 x 45

91066300

TOYOTA

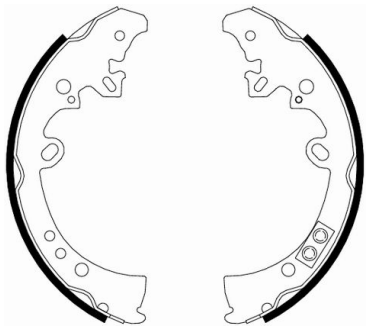

ø 295 x 62

91066400

HYUNDAI, KIA

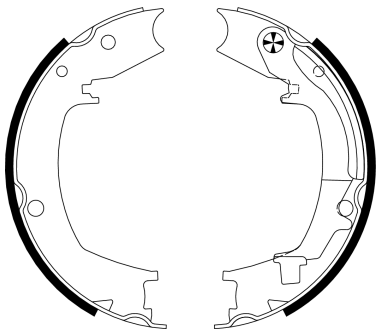

ø 190 x 40

91066500

TOYOTA

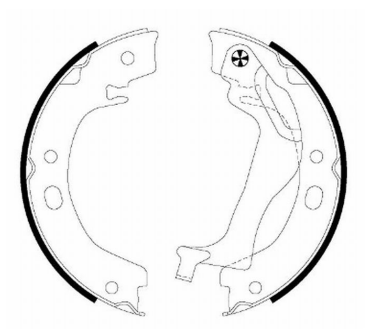

ø 172 x 22

91066600

SMART

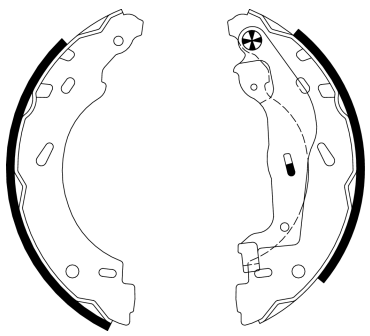

ø 203.2 x 32

91066700

CITROËN, FIAT, PEUGEOT

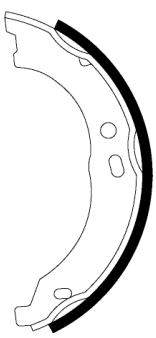

ø 172 x 42

91066800

MERCEDES-BENZ, VOLKSWAGEN

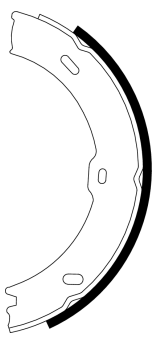

ø 180 x 25

91066900

MERCEDES-BENZ, MERCEDES-BENZ (BBDC)

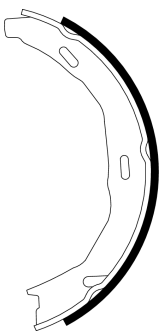

ø 164 x 25

91067000

MERCEDES-BENZ

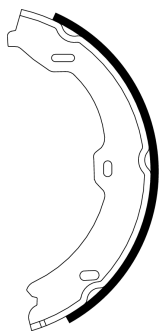

ø 180 x 25

91067100

CHEVROLET, CHEVROLET (SGM), DAEWOO, HOLDEN, OPEL, PONTIAC, VAUXHALL

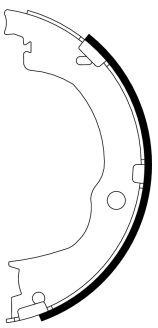

ø 188.4 x 26

91067200

CITROËN, PEUGEOT

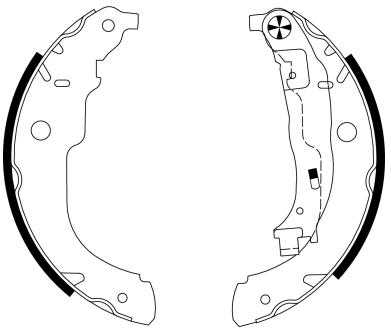

ø 228 x 42

91067300

KIA

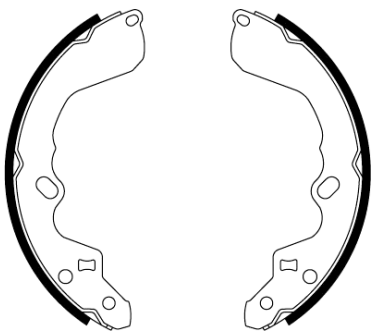

ø 228.6 x 32

91067500

FIAT, SUZUKI

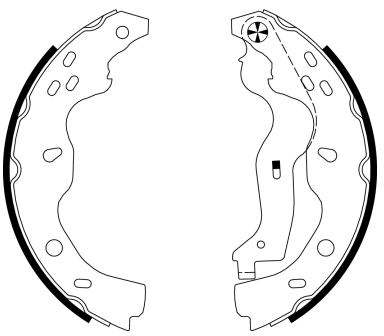

ø 220 x 35

91067600

CITROËN, FIAT, PEUGEOT

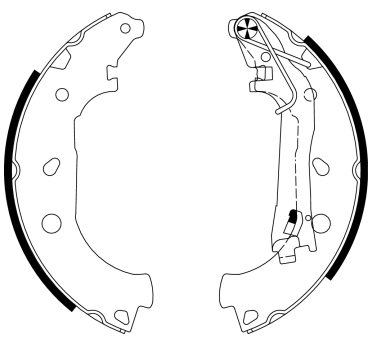

ø 228.6 x 42

91067700

SUZUKI

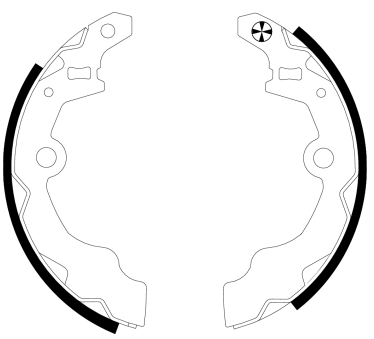

ø 180 x 31

91067800

LAND ROVER

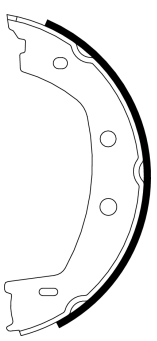

ø 185 x 30

91067900

DAIHATSU, PERODUA, SUBARU, TOYOTA

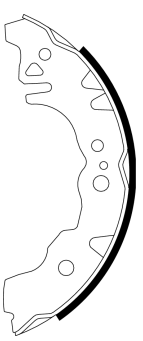

ø 180 x 28

91068000

DAIHATSU

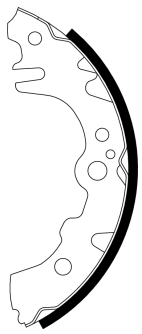

ø 165 x 28

91068100

HYUNDAI, HYUNDAI (BEIJING), KIA

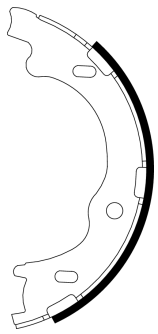

ø 172 x 27

91068200

LEXUS, NISSAN, NISSAN (DONGFENG), RENAULT, RENAULT SAMSUNG, TOYOTA

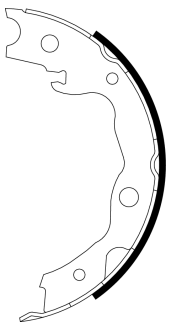

ø 172 x 32

91068300

CITROËN, MITSUBISHI, PEUGEOT, SUBARU

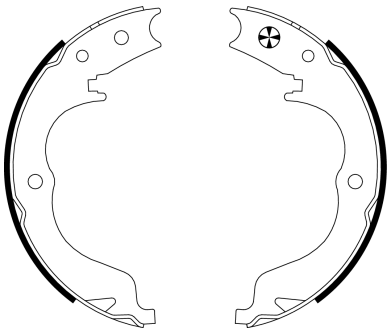

ø 190 x 32

91068400

HYUNDAI

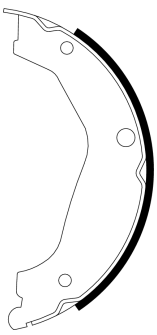

ø 190 x 40

91068500

HYUNDAI, KIA

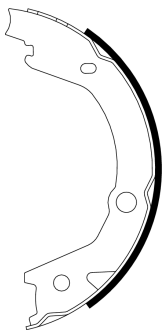

ø 167 x 27.5

91068600

DAIHATSU, PREMIER, TOYOTA

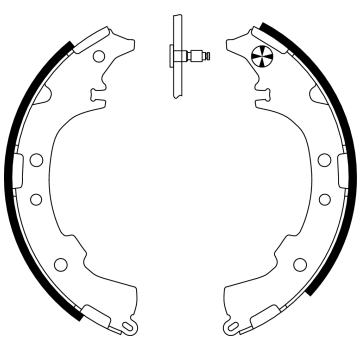

ø 228.6 x 41.5

91068700

SUZUKI

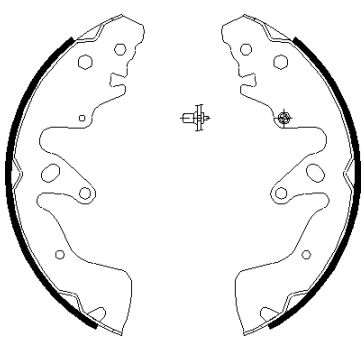

ø 254 x 41

91068800

MITSUBISHI, SMART

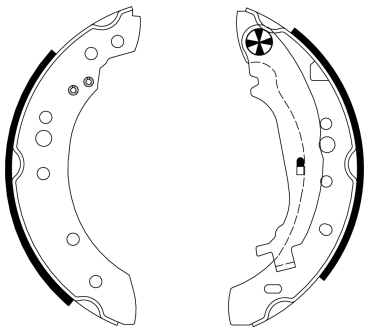

ø 203 x 38

91068900

DODGE, HYUNDAI, KIA

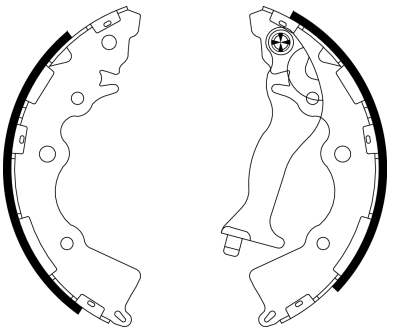

ø 203 x 31.5

91069000

MERCEDES-BENZ, VOLKSWAGEN

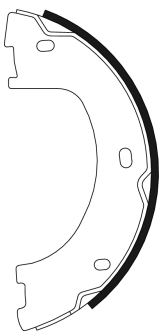

ø 172 x 42

91069100

MERCEDES-BENZ, MERCEDES-BENZ (BBDC)

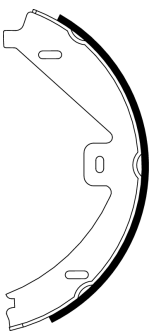

ø 180 x 25

91069200

FORD, FORD AUSTRALIA

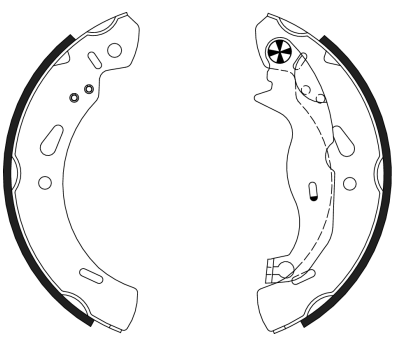

ø 200 x 32

91069300

DACIA, LADA, MERCEDES-BENZ, RENAULT

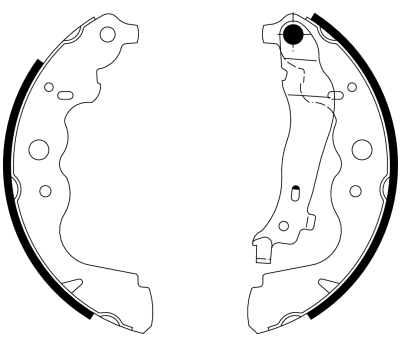

ø 228.6 x 42

91069400

MORGAN

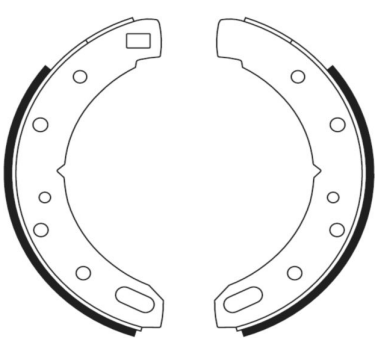

ø 228.6 x 45

91069600

CHRYSLER

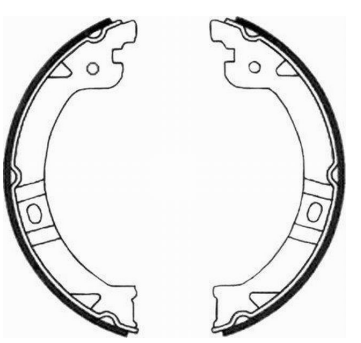

ø 180 x 30

91069700

JEEP

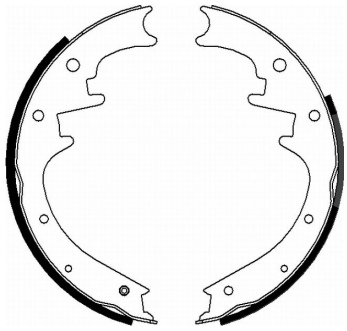

ø 254 x 46

91069800

LDV

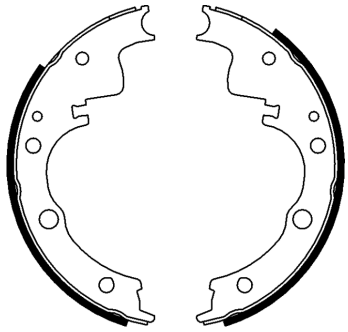

ø 254 x 57

91069900

LAND ROVER

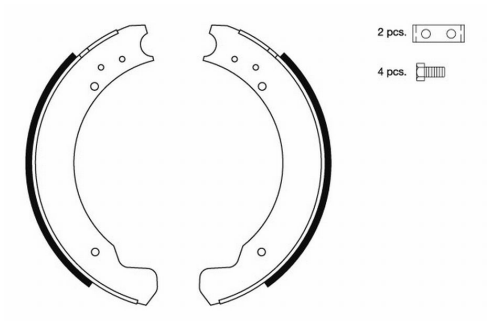

ø 254 x 39

91070100

DAIMLER, JAGUAR

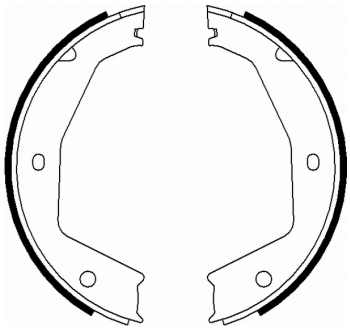

ø 180 x 30

91070300

HYUNDAI, KIA, KIA (DYK)

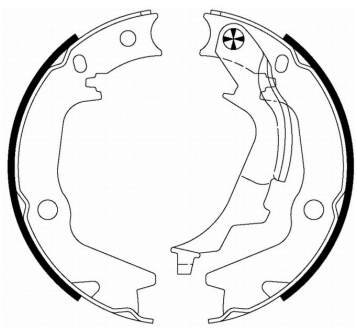

ø 168 x 32

91070400

HYUNDAI

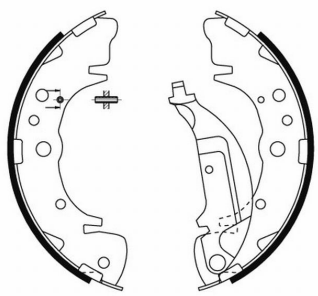

ø 254 x 57

91070600

HYUNDAI

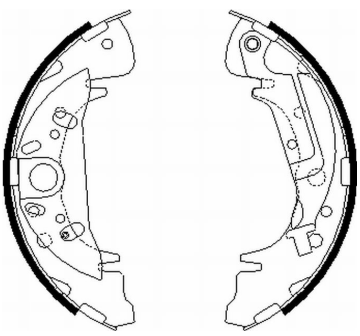

ø 254 x 55

91070700

HYUNDAI, KIA



ø 167 x 27

91071800

DAIHATSU, SUBARU

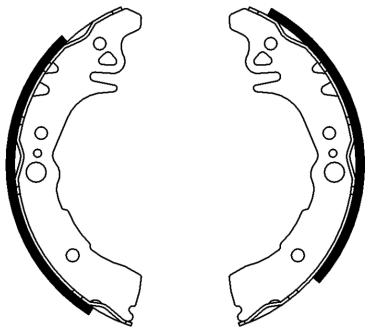

ø 180 x 27

91072000

CHEVROLET, DAEWOO

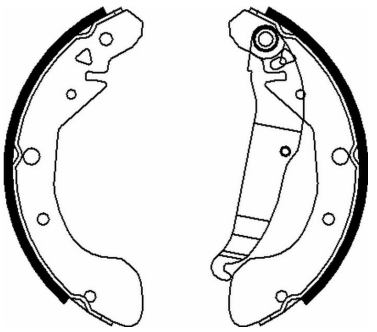

ø 230 x 52

91072300

HONDA

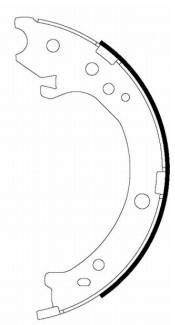

ø 198 x 35

91072500

DODGE, HYUNDAI, KIA

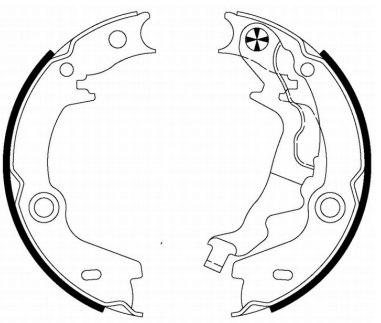

ø 168 x 32

91072600

DODGE, HYUNDAI

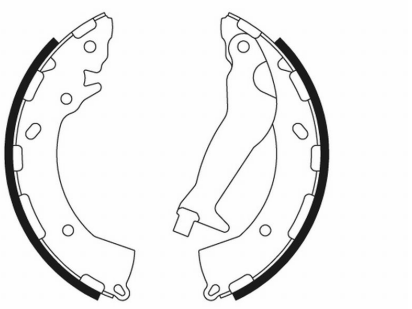

ø 203 x 32

91072900

KIA

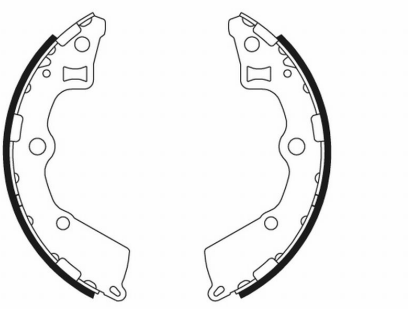

ø 180 x 32

91073000

MITSUBISHI

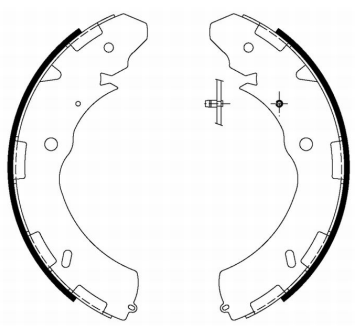

ø 300 x 51

91074000

LEXUS

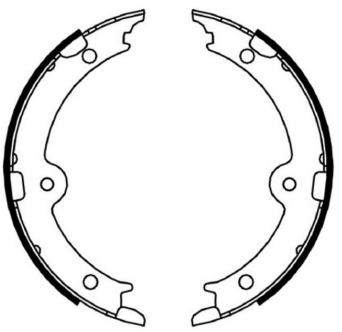

ø 190 x 27

91074500

HYUNDAI, INOKOM

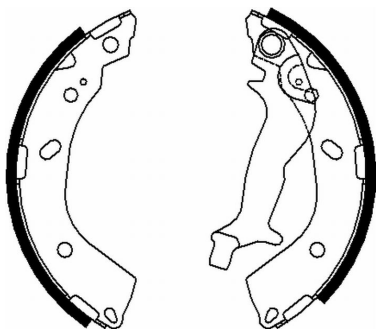

ø 180 x 32

91074600

INFINITI, NISSAN, TOYOTA

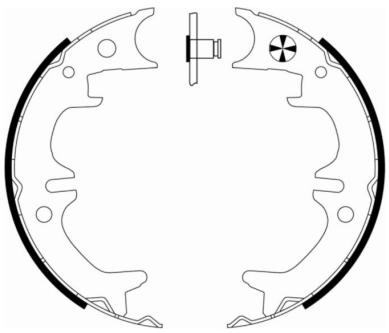

ø 170 x 40

91074700

PORSCHE, VOLKSWAGEN



ø 210 x 30

91074800

SUBARU, SUZUKI

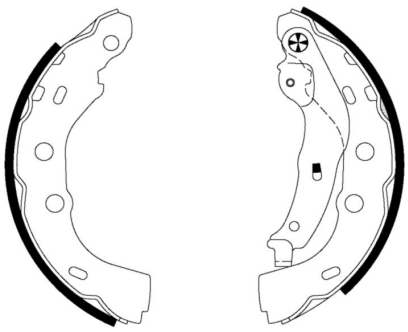

ø 200 x 32

91074900

IVECO

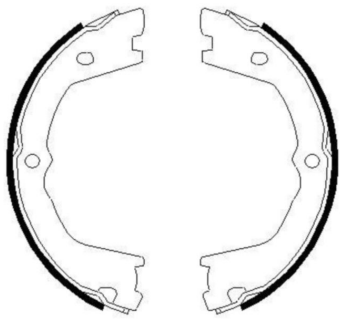

ø 190 x 42

91075000

DAIHATSU, TOYOTA

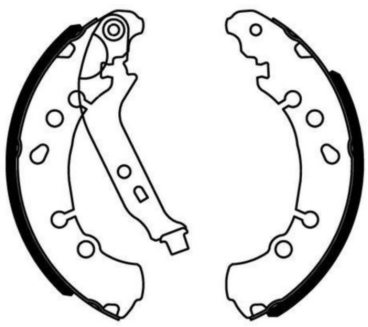

ø 203 x 39

91075100

CHEVROLET, OPEL, PONTIAC, VAUXHALL

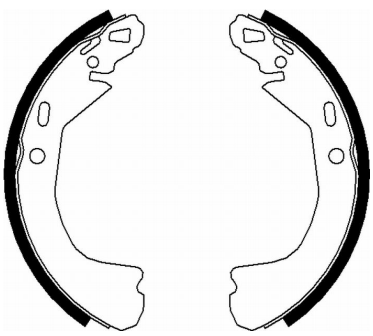

ø 225 x 45

91075200

MARUTI SUZUKI, NISSAN, SUZUKI

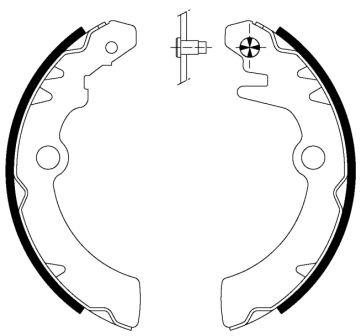

ø 180 x 26

91075300

KIA

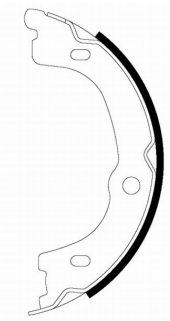

ø 190 x 40

91075400

HYUNDAI

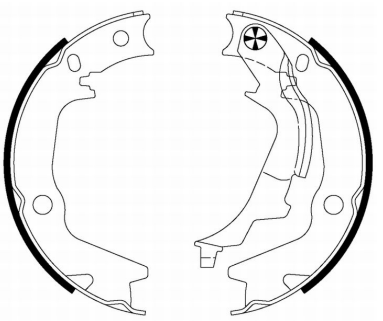

ø 167 x 31.5

91075500

KIA

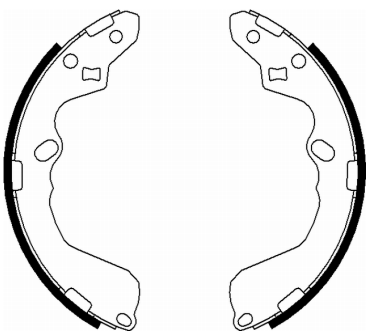

ø 228 x 30

91077100

NISSAN

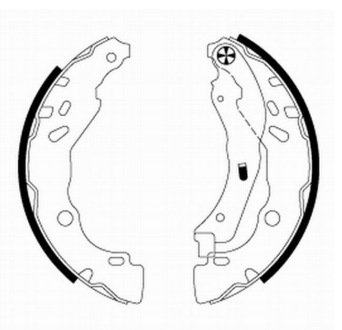

ø 203.2 x 39

91077200

CITROËN, PEUGEOT

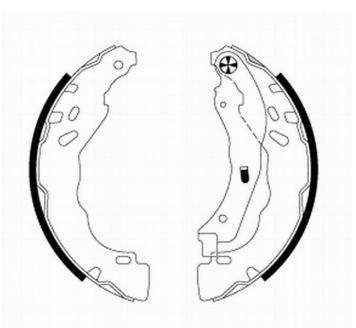

ø 203.2 x 39

92005400

8

OPEL, VAUXHALL

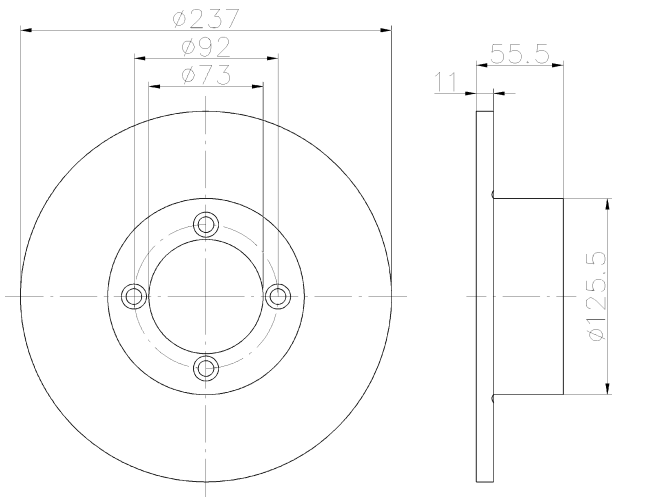

92009200

9

DACIA

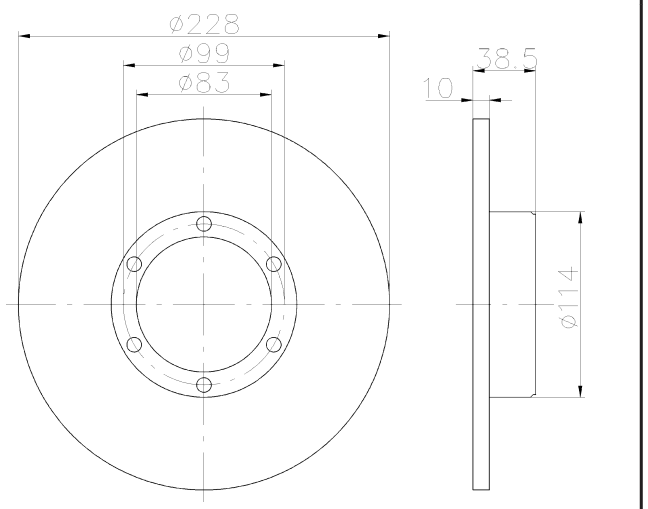

92009303

8 PRO

SEAT, VOLKSWAGEN

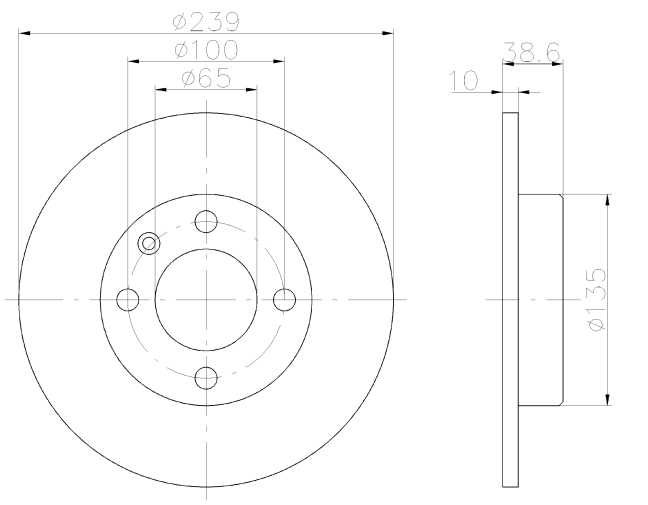

92010300

8

VOLKSWAGEN

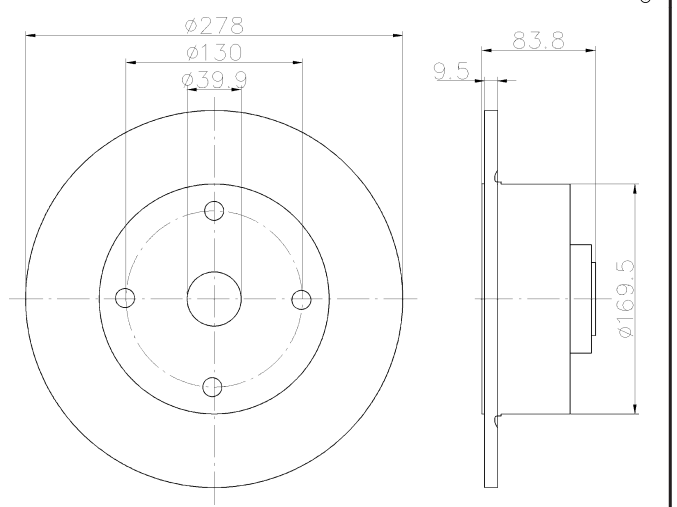

92010603

10 PRO

SEAT, VOLKSWAGEN, VOLKSWAGEN (FAW), VOLKSWAGEN (SVW)

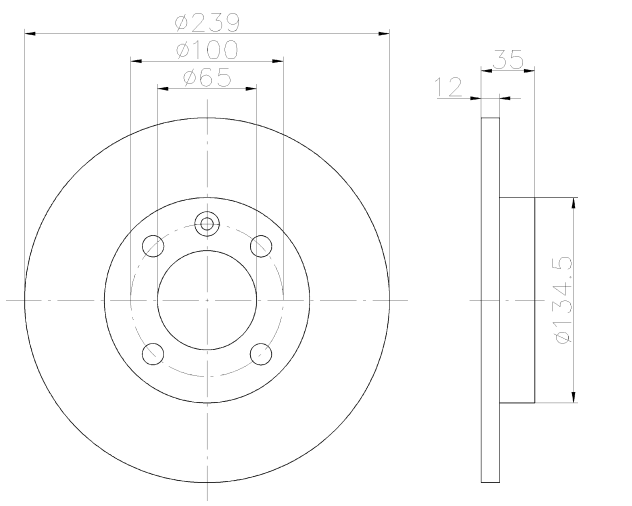

92012103

18 PRO

SEAT, VOLKSWAGEN, VOLKSWAGEN (SVW)

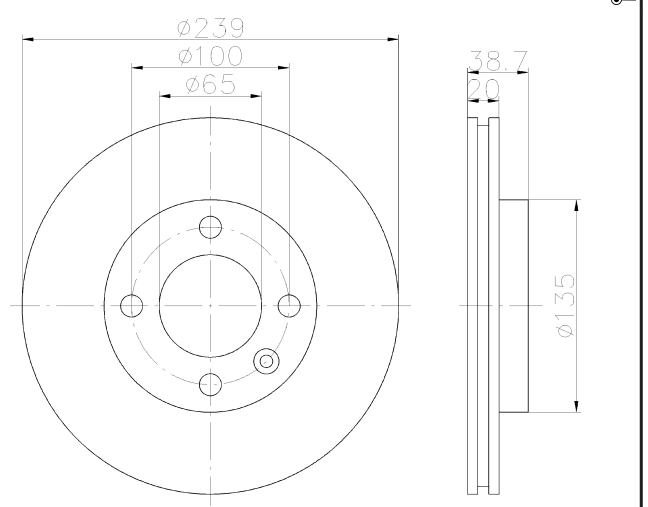

92017203

22 PRO

OPEL, RENAULT, VAUXHALL

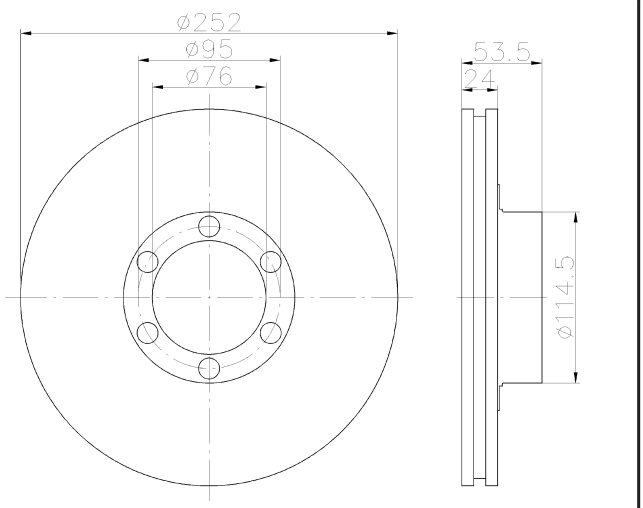

92019300

9

FIAT, ZASTAVA

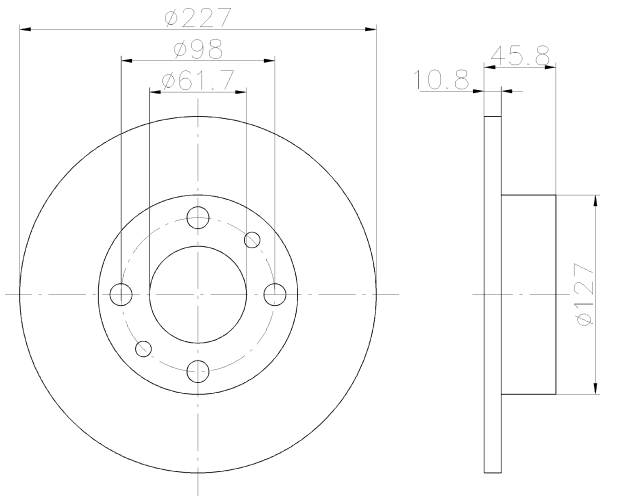

92019900

9.9

CHEVROLET, LADA

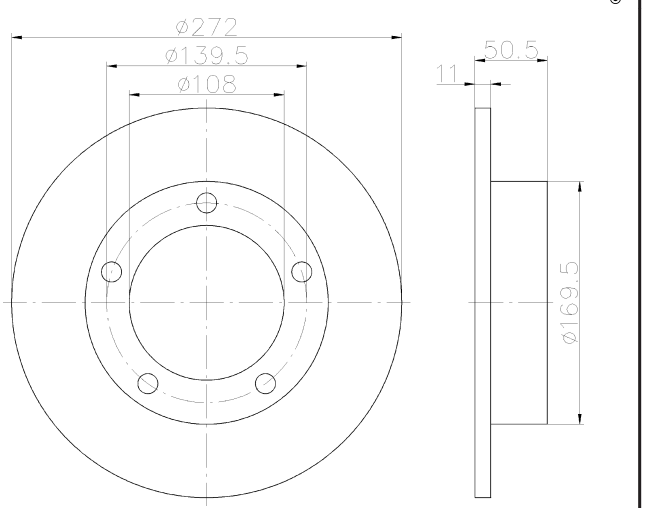

92020300

13

MERCEDES-BENZ, PUCH

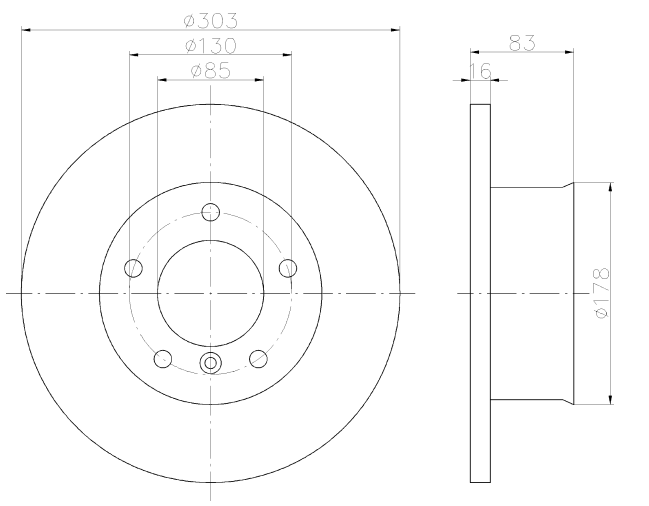

92020903

9.7 PRO

HOLDEN, OPEL, VAUXHALL

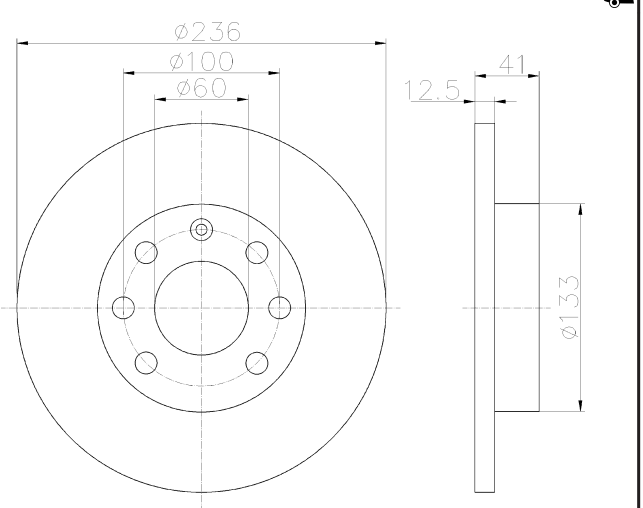

92026100

8

AUDI

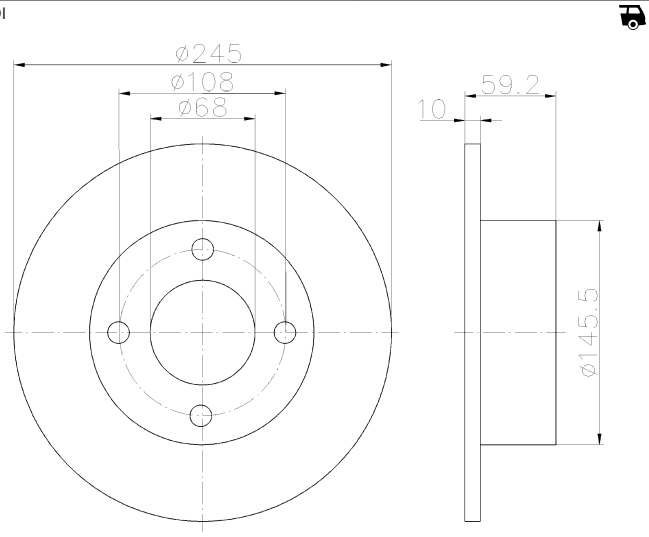

92029603

17 PRO

CHEVROLET, DAEWOO, FSO, HOLDEN, OPEL, VAUXHALL, ZAZ

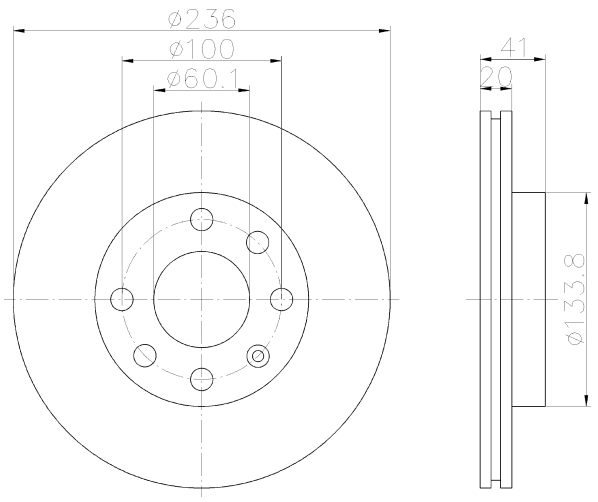

92029803

8 PRO

CITROËN, DALLAS, PEUGEOT, WULING

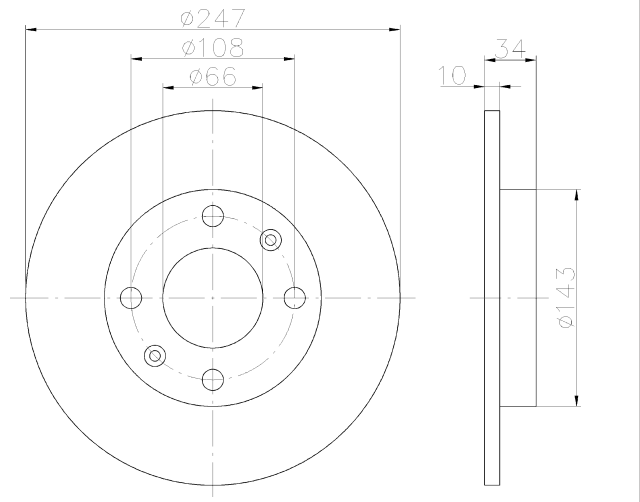

92029900

8

PEUGEOT

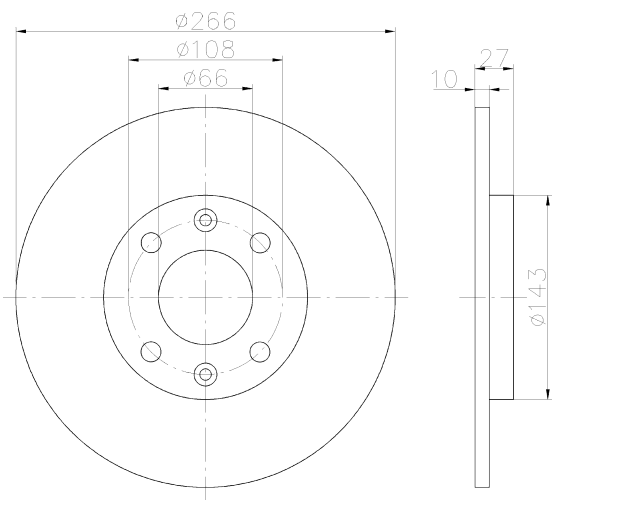

92032703

7.3 PRO

CHRYSLER, MERCEDES-BENZ

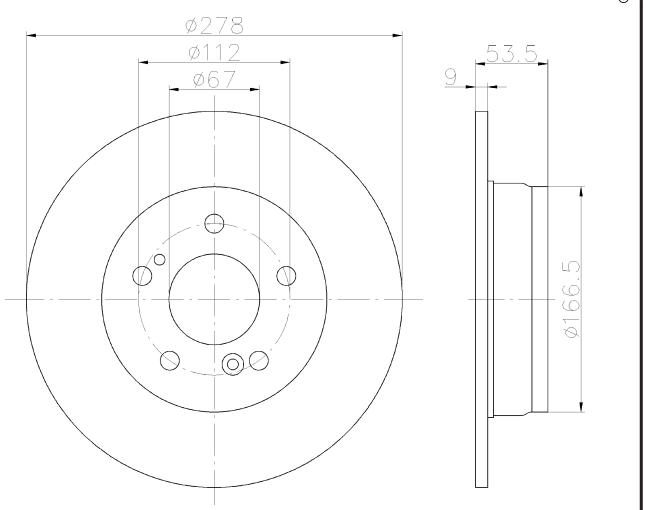

92034203

9 PRO

CHRYSLER, FIAT, LANCIA

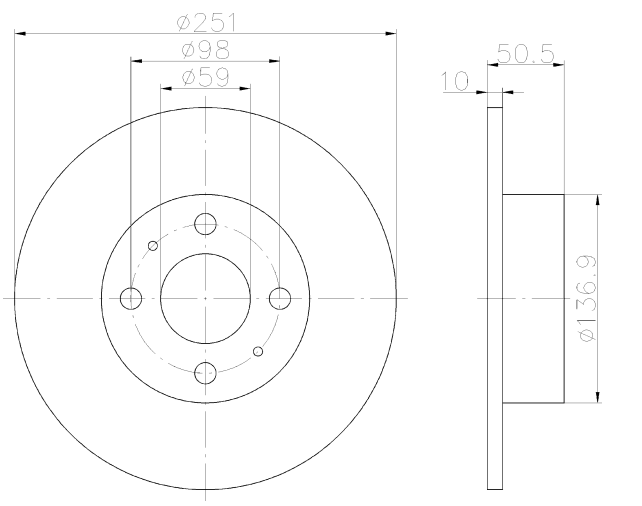

92034500

10.8

FIAT

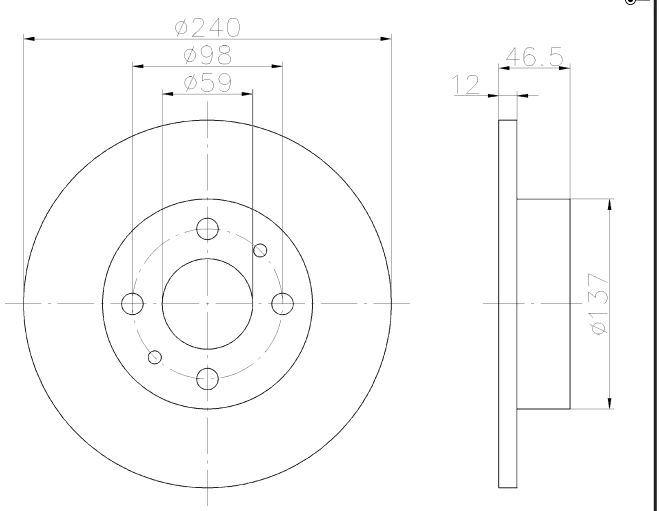

92036003

7 PRO

RENAULT

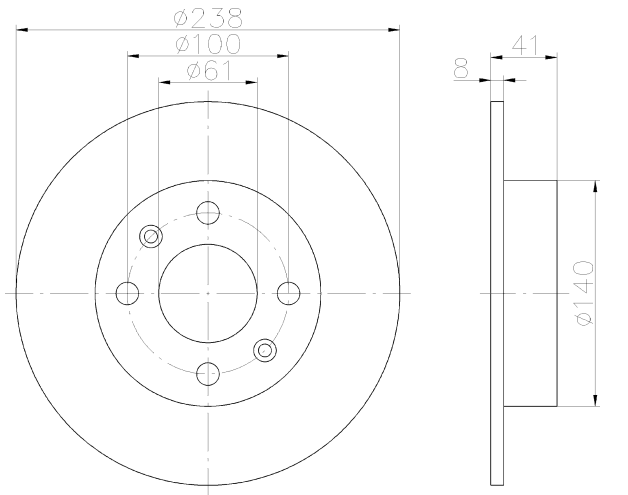

92036103

10.5 PRO

DACIA, LADA, NISSAN, RENAULT

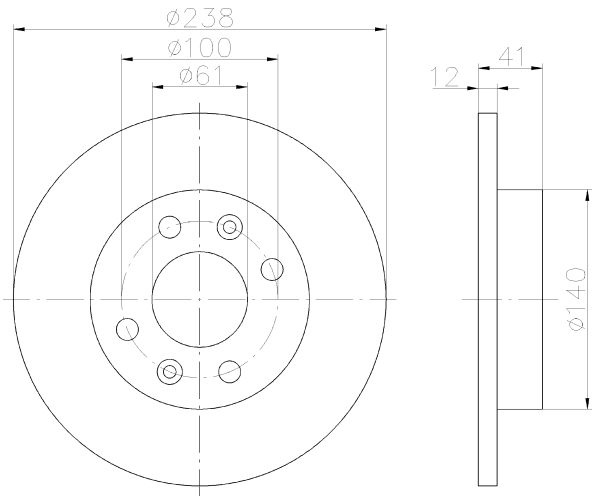

92036203

17.7 PRO

NISSAN, RENAULT

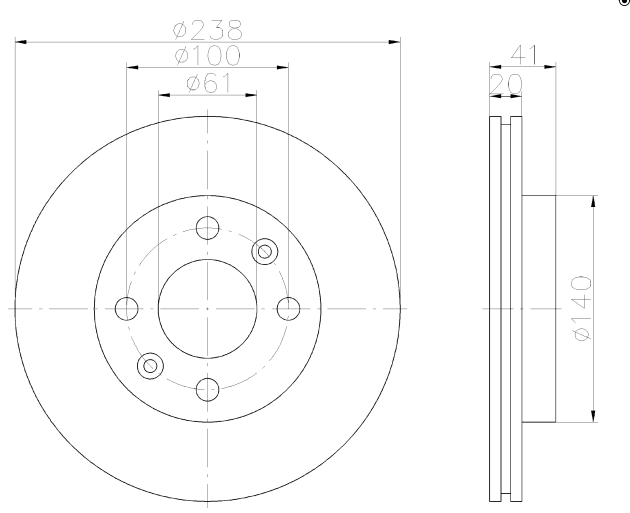

92036600

9

FORD ASIA / OZEANIA, SUZUKI

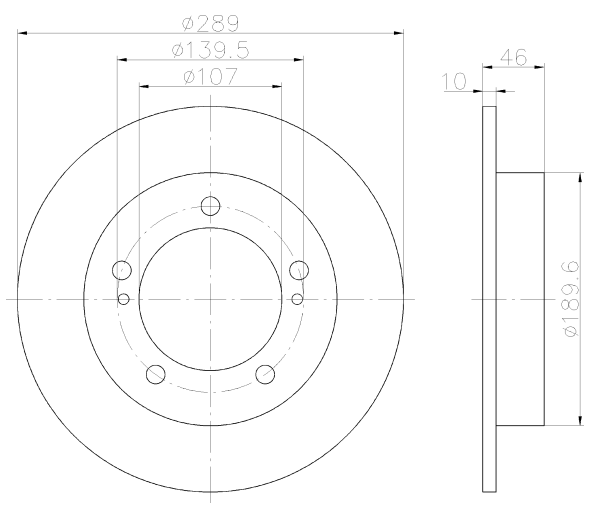

92036803

18 PRO

SEAT, VOLKSWAGEN, VOLKSWAGEN (SVW)

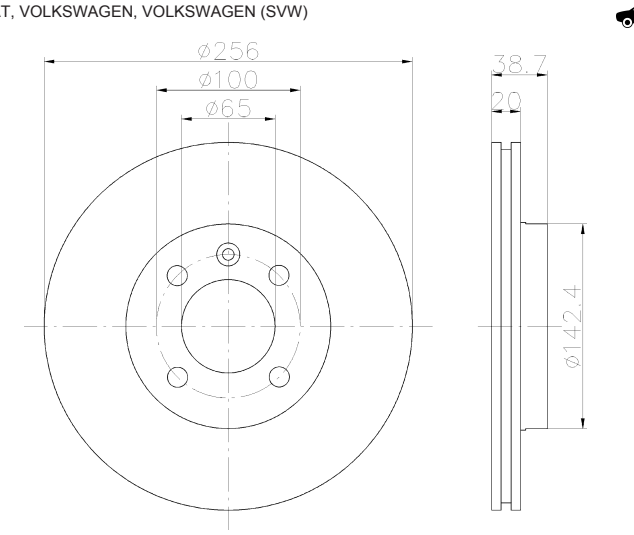

92037100

18

AUDI

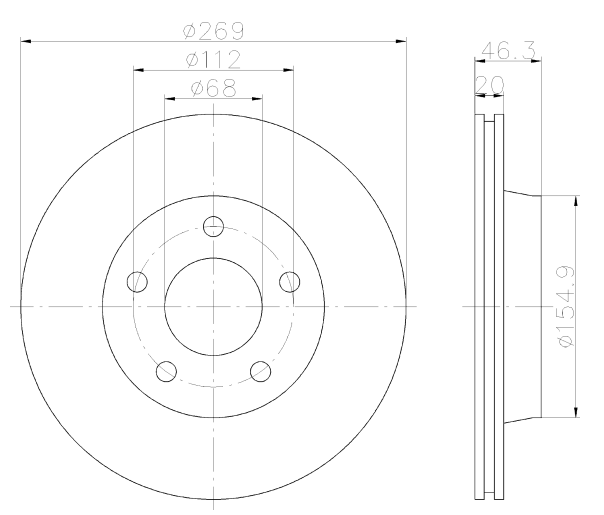

92037400

8

AUDI

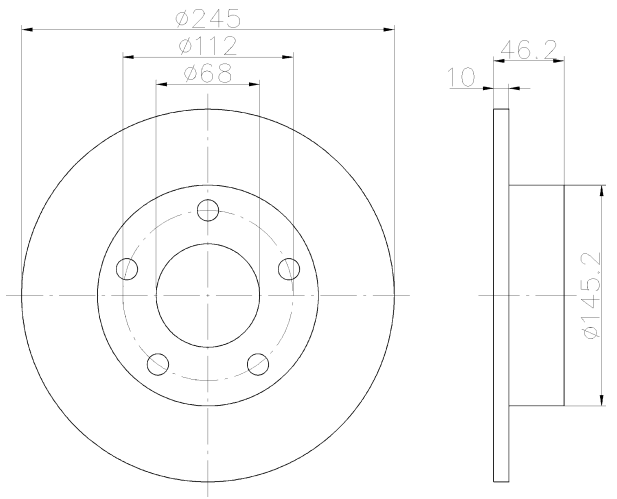

92038500

6

CITROËN, PEUGEOT

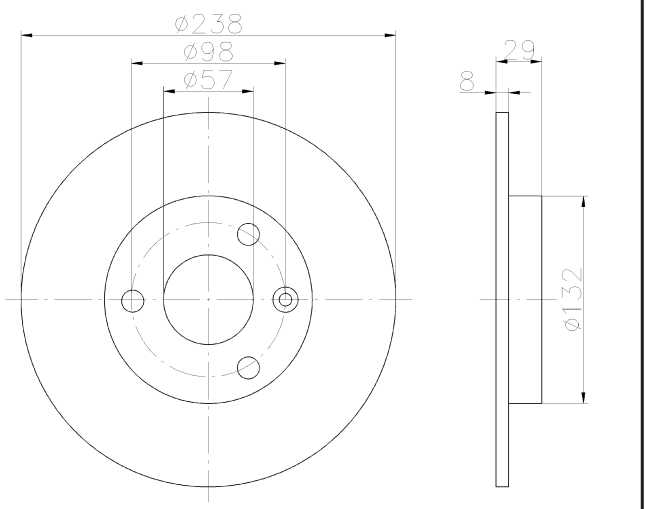

92038900

14.5

MERCEDES-BENZ, SSANGYONG

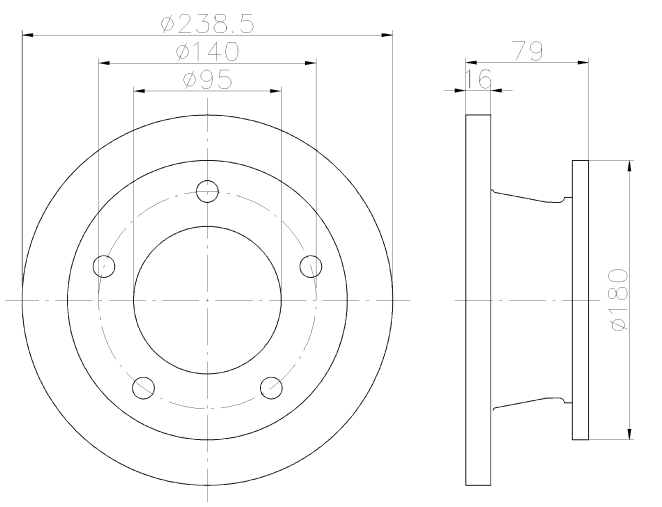

92039100

10.8

LADA, ZAZ

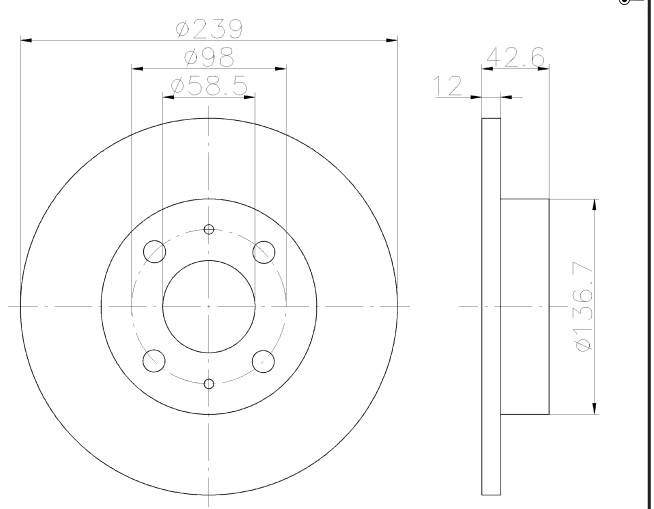

92039203

21 PRO

CHEVROLET, DAEWOO, FSO, OPEL, VAUXHALL, ZAZ

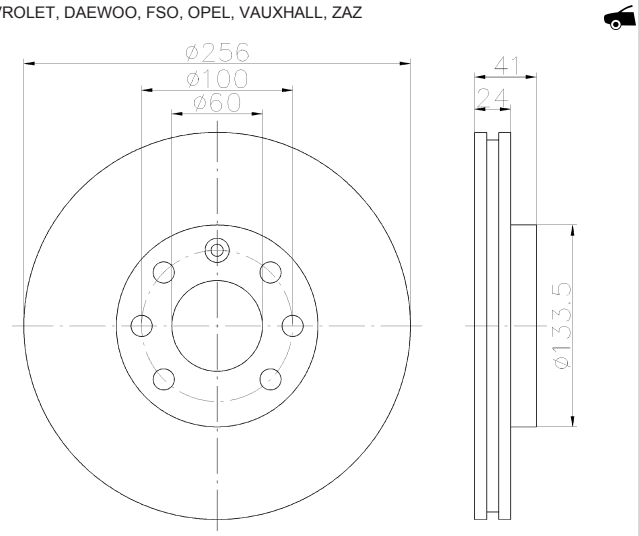

92040600

13

LAND ROVER

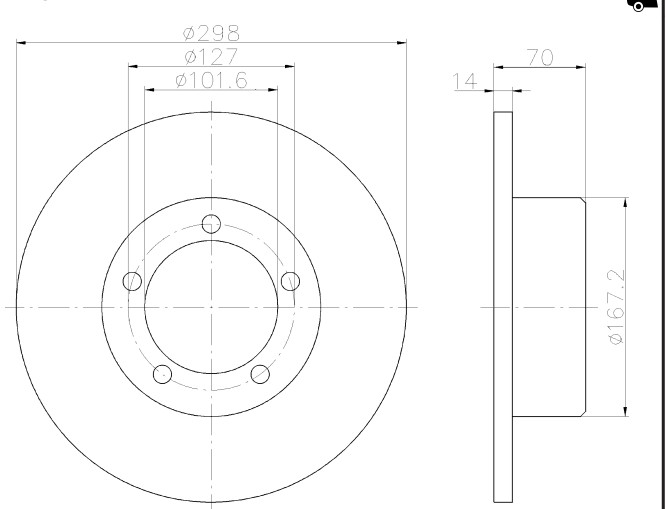

92041503

10.2 PRO

ALFA ROMEO, FIAT, LANCIA

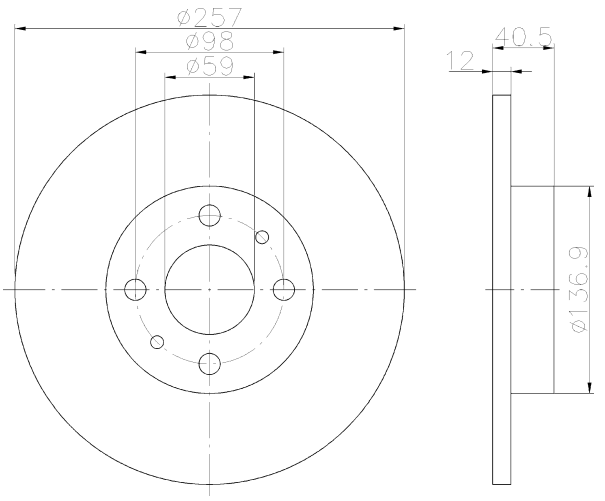

92041703

11 PRO

SEAT, VOLKSWAGEN

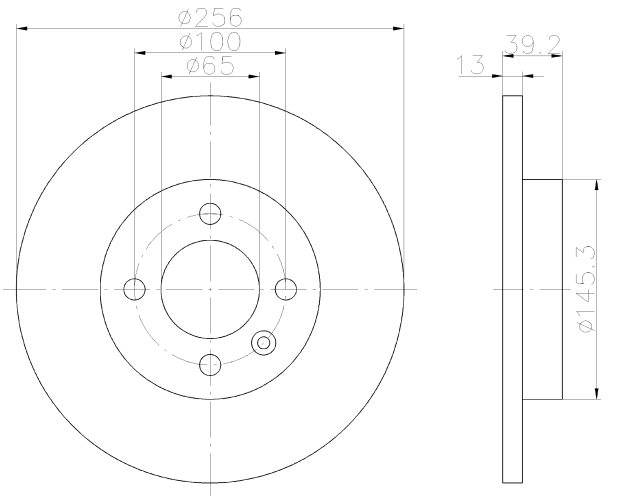

92041803

8 PRO

SEAT, VOLKSWAGEN

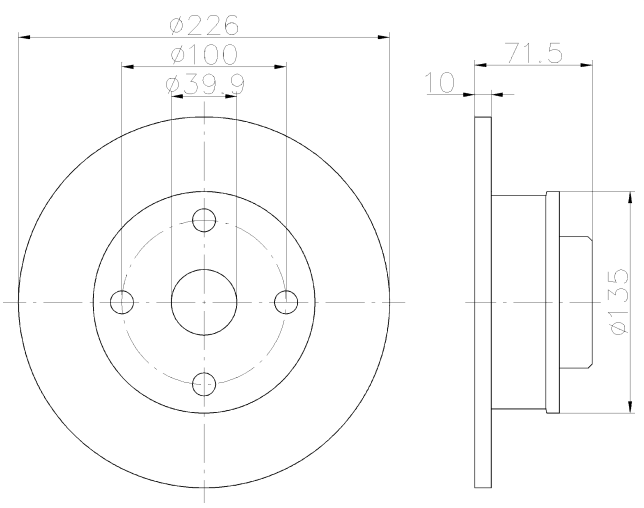

92043103

18.5 PRO

CITROËN, PEUGEOT

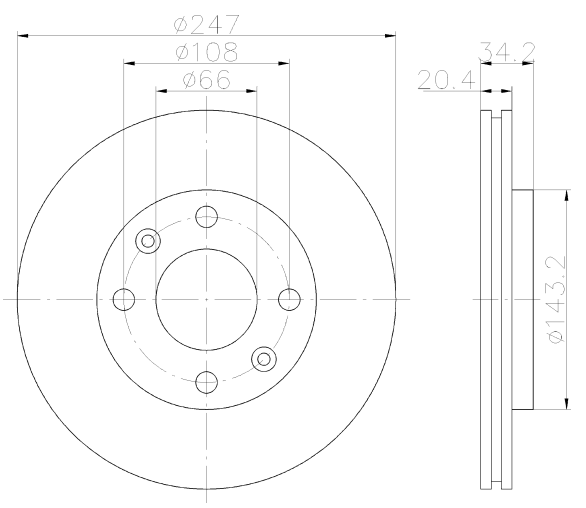

92043500

20

SEAT

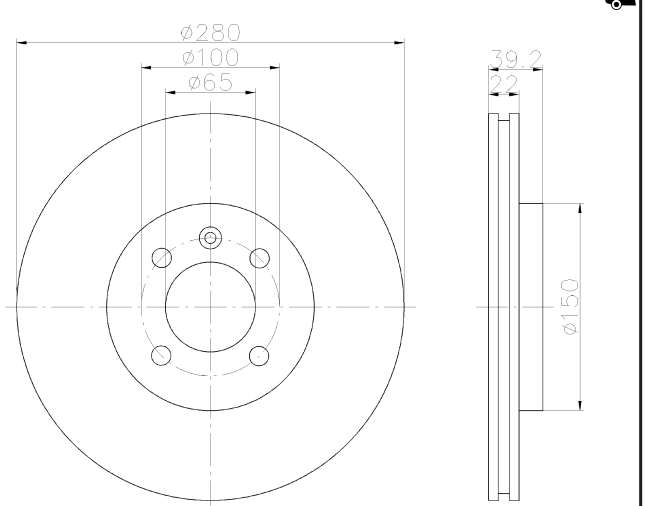

92043800

8

DAEWOO, FORD ASIA / OZEANIA, SUZUKI

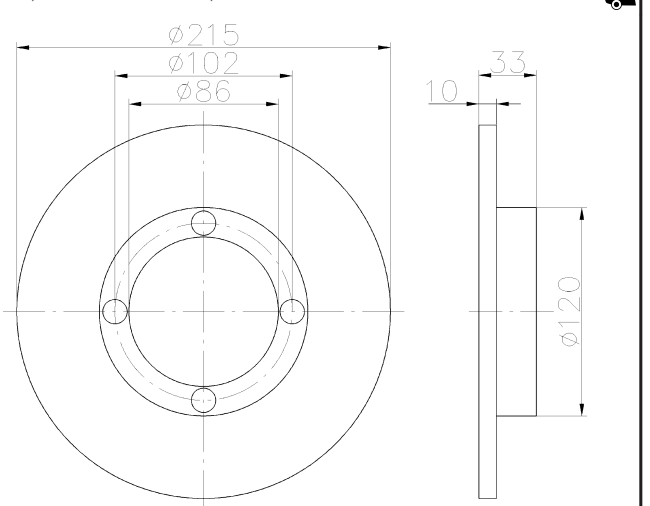

92044500

20.5

MG

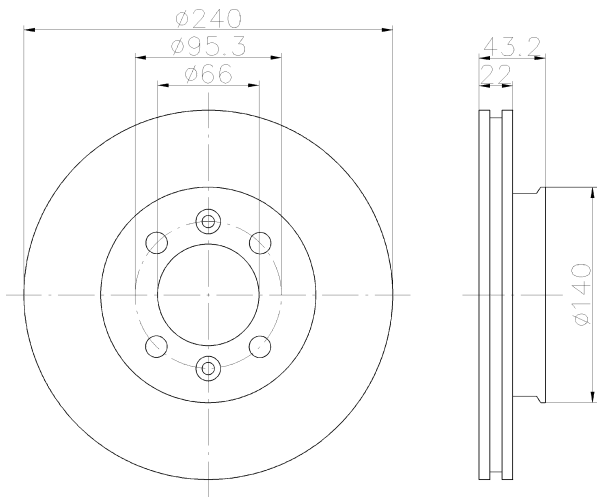

92046500

15

HONDA

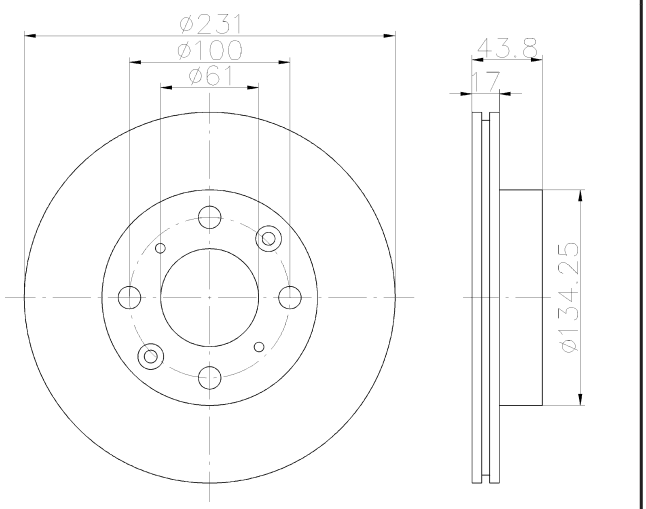

92046803

20.2 PRO

ALFA ROMEO, FIAT, OPEL, VAUXHALL

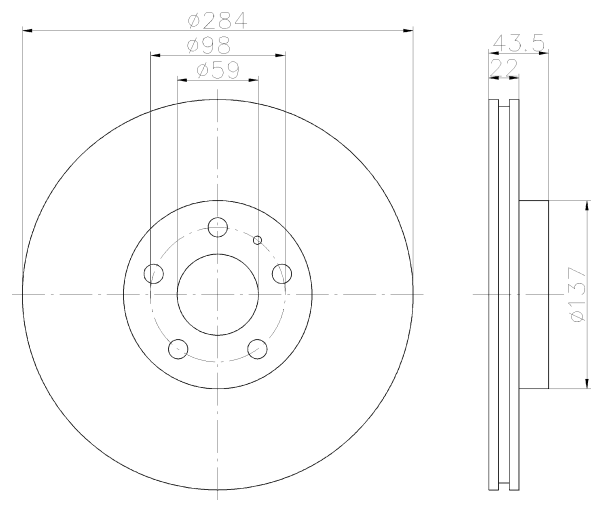

92046903

9 PRO

ALFA ROMEO, LANCIA

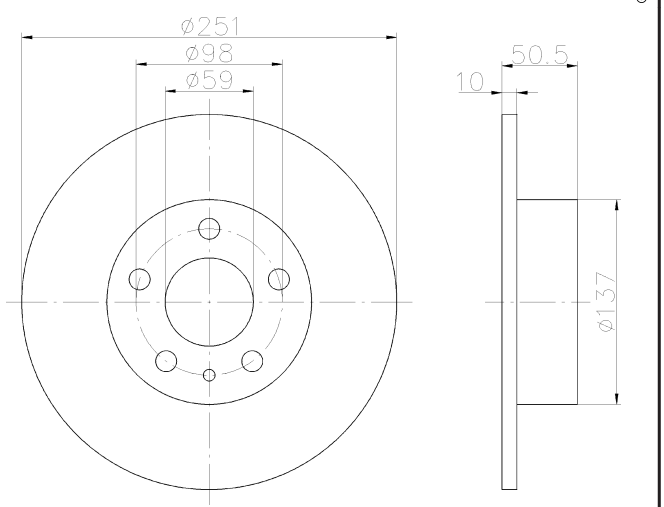

92047400

18.4

MITSUBISHI

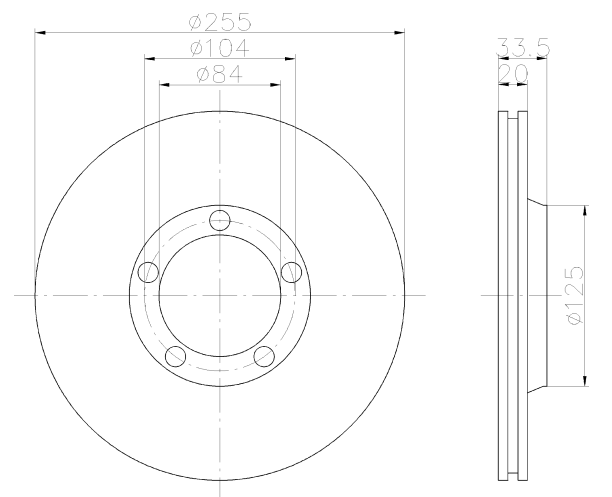

92048103

18.5 PRO

CITROËN, NISSAN (DONGFENG), PEUGEOT

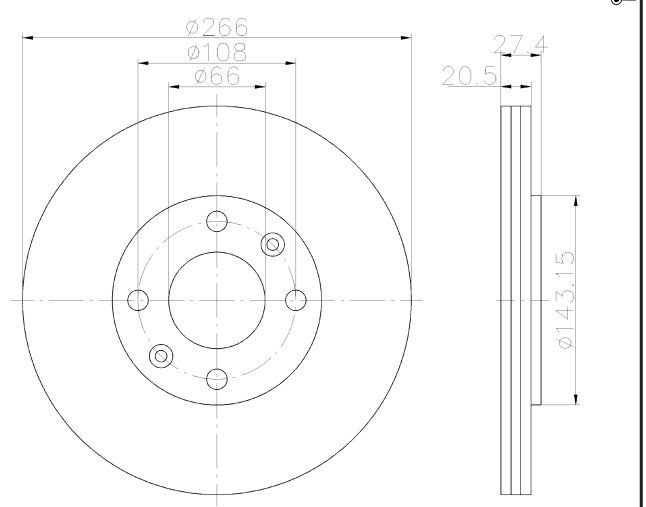

92048200

8

PEUGEOT

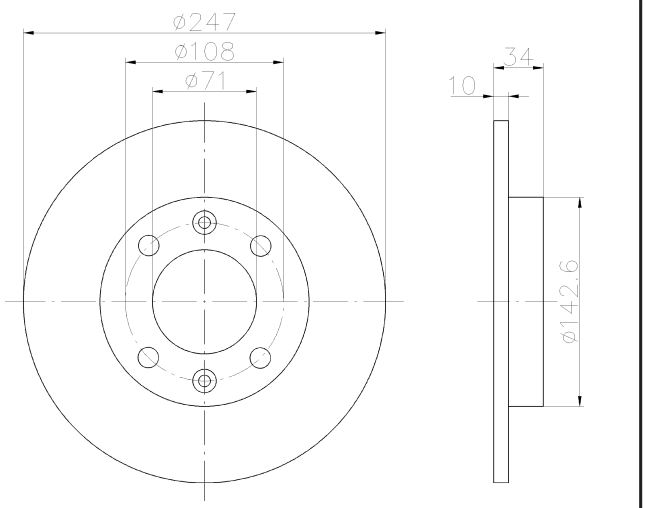

92048800

15.5

SUBARU

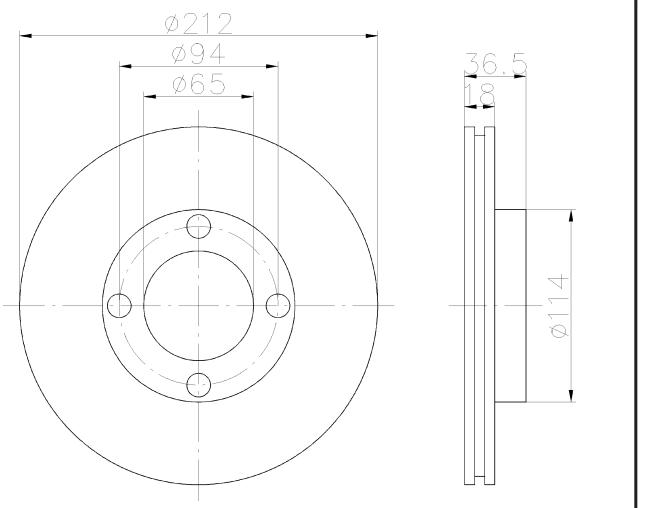

92050900

8

FORD

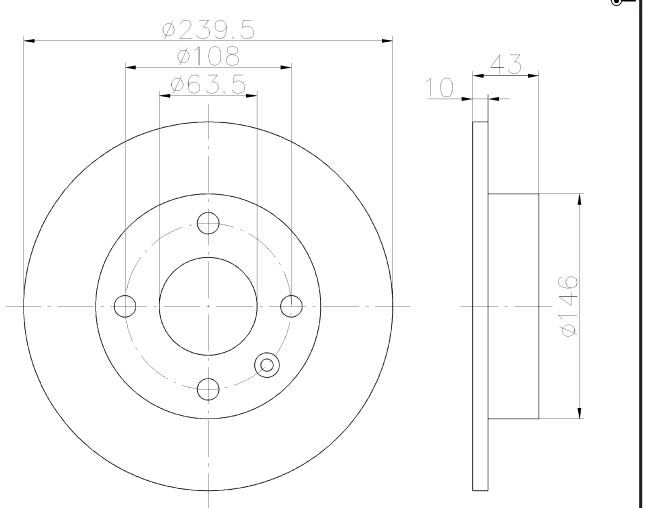

92051003

18 PRO

FORD, FORD AUSTRALIA, MAZDA

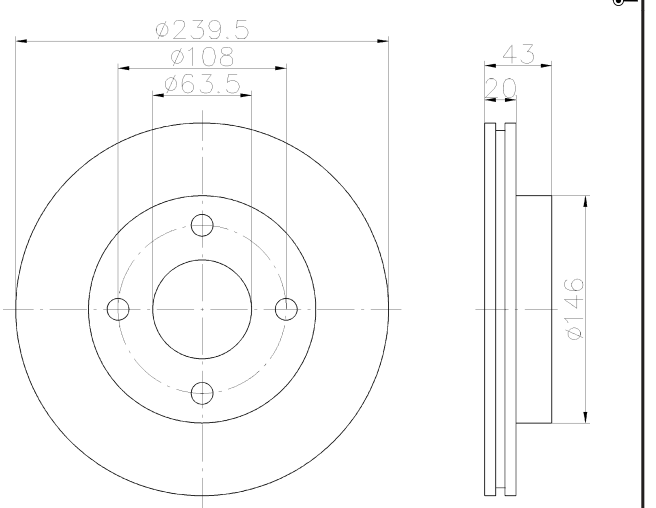

92053503

20.2 PRO

CHRYSLER, FIAT, LANCIA

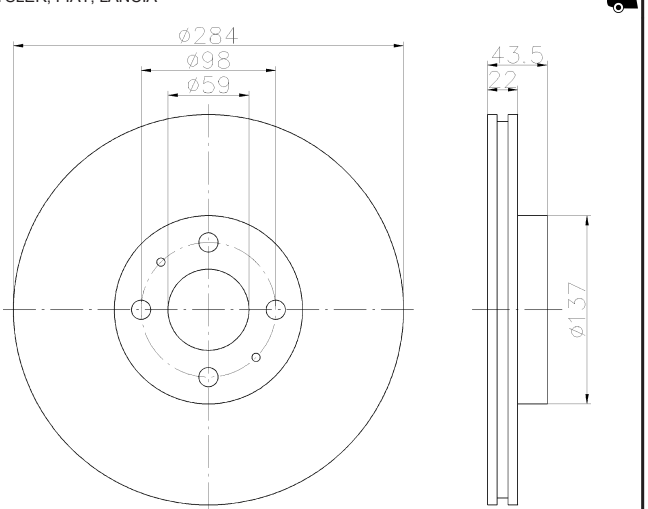

92054200

20

AUDI

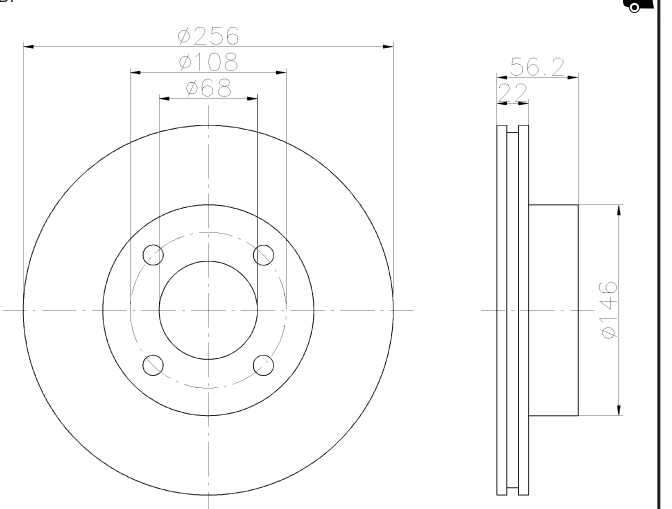

92054400

20

PEUGEOT

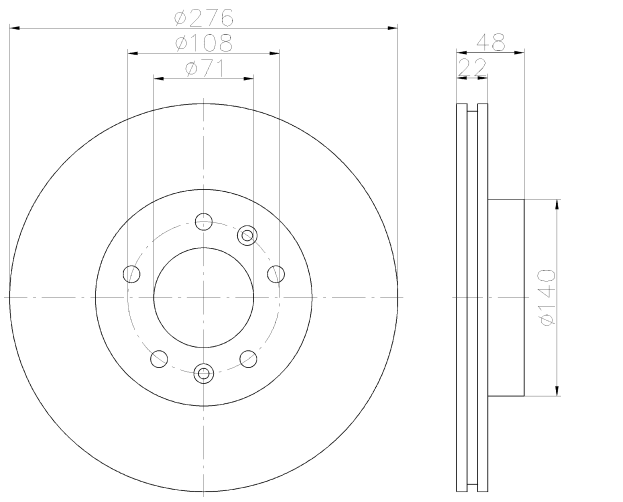

92054500

7

CITROËN

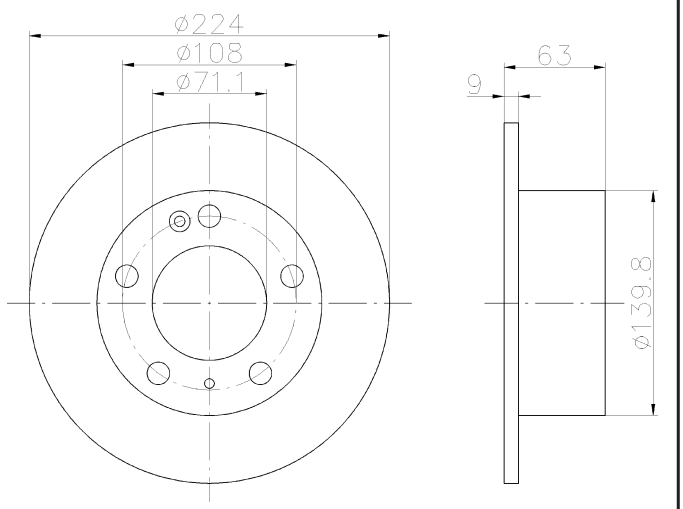

92054800

8

PEUGEOT

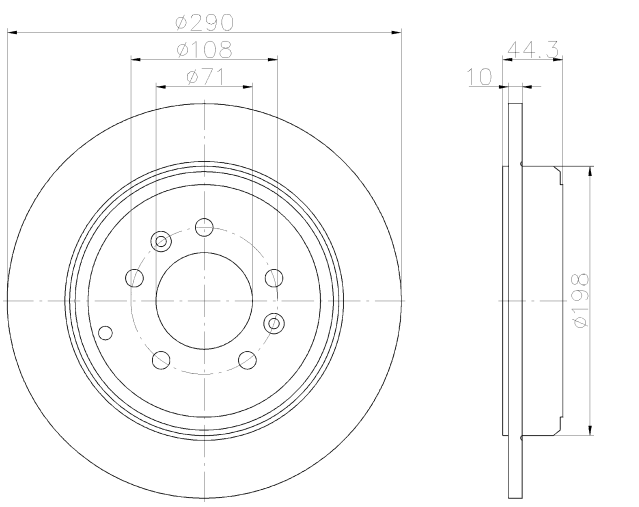

92055003

6 PRO

CITROËN, PEUGEOT

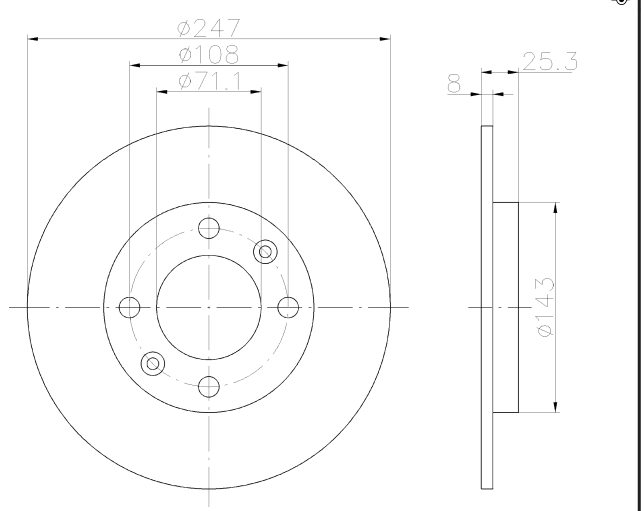

92055203

20.2 PRO

ALFA ROMEO, FIAT, LANCIA

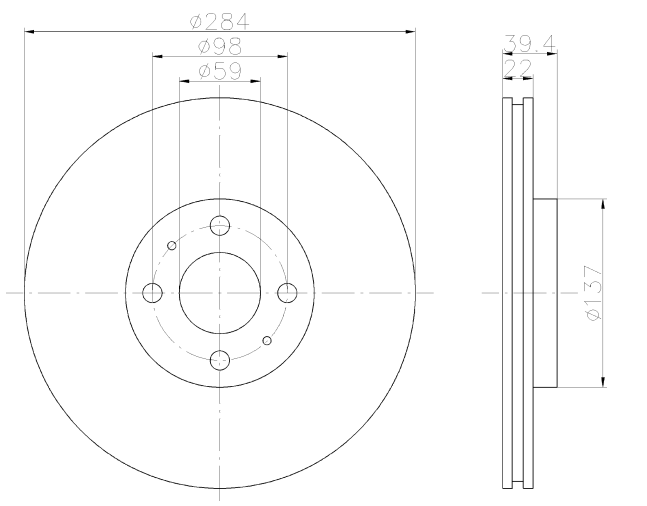

92055503

10.4 PRO

BMW

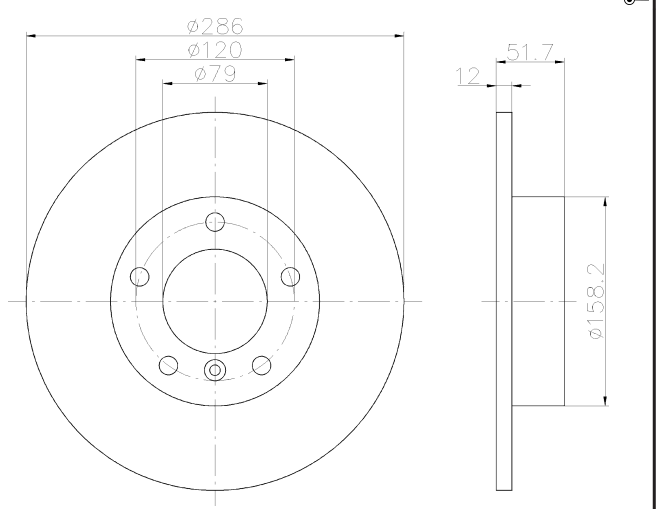

92055603

20.4 PRO

BMW

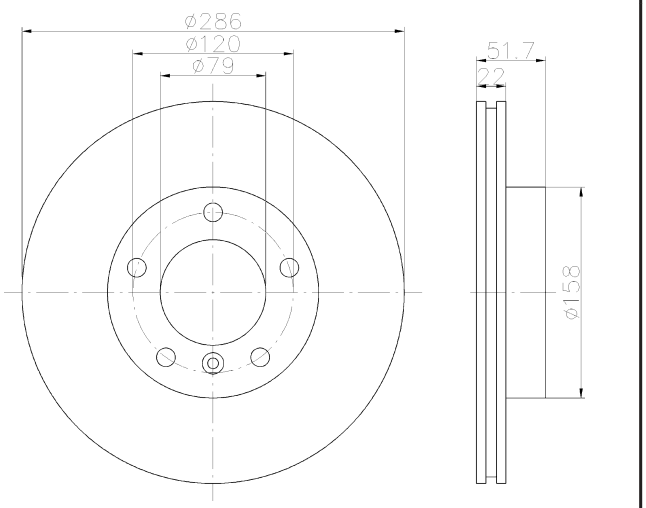

92055605

20.4 PRO

BMW

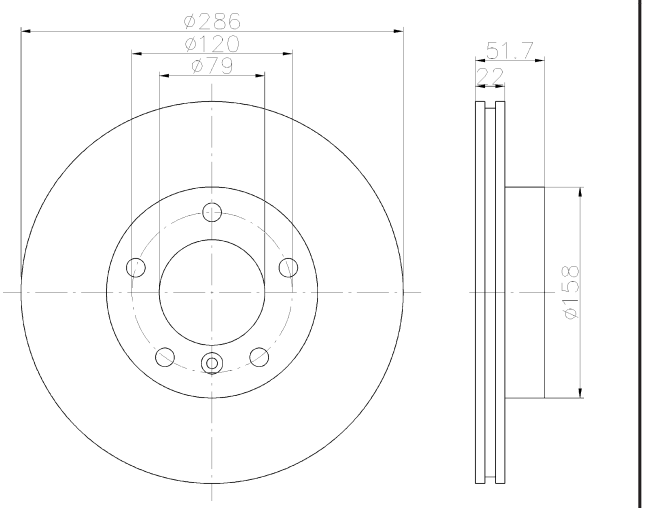

92055703

8.4 PRO

BMW

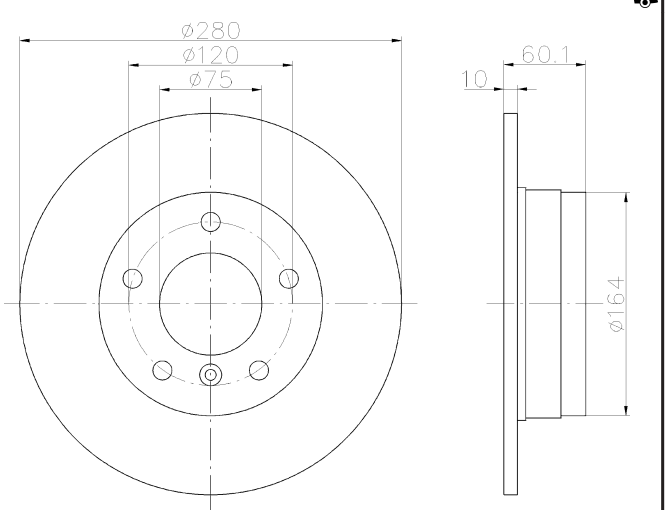

92055900

13

VOLKSWAGEN

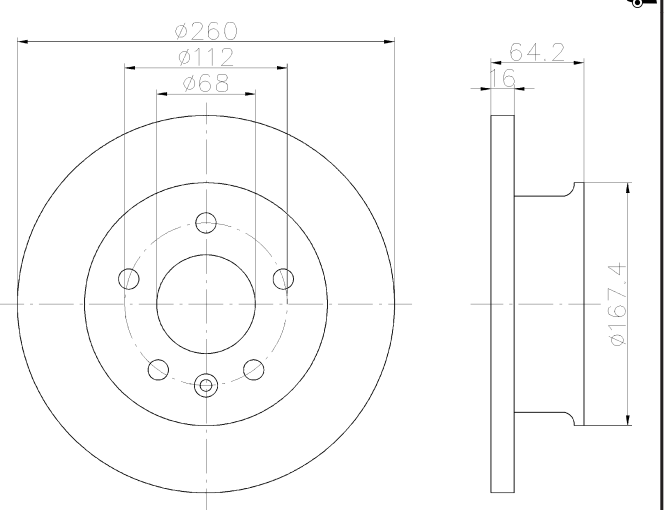

92056000

20

VOLKSWAGEN

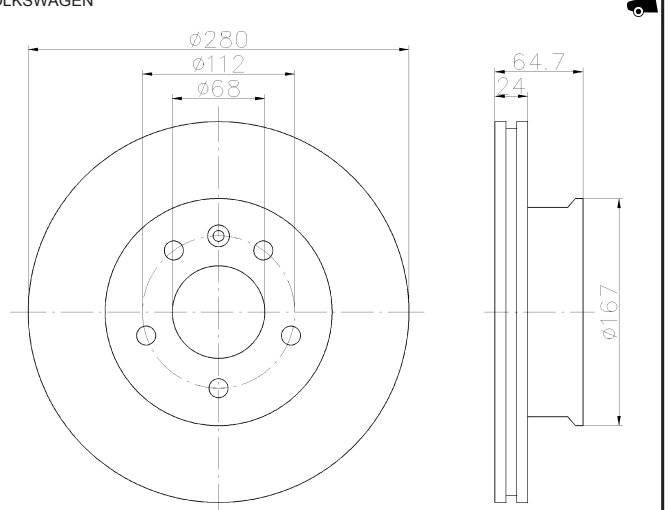

92056300

20

NISSAN

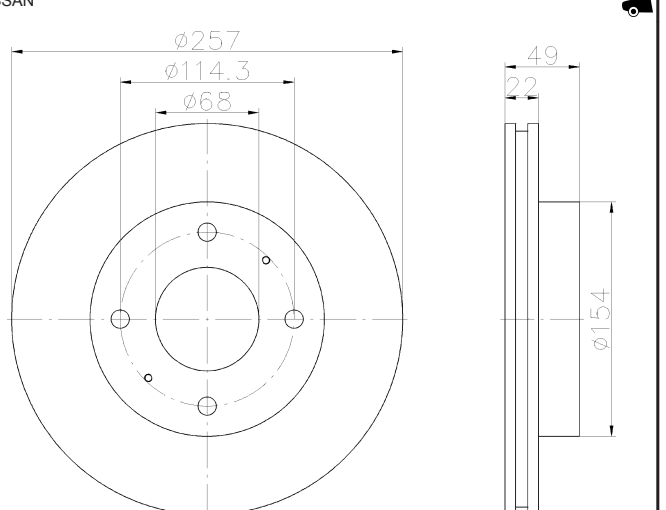

92056400

9

NISSAN

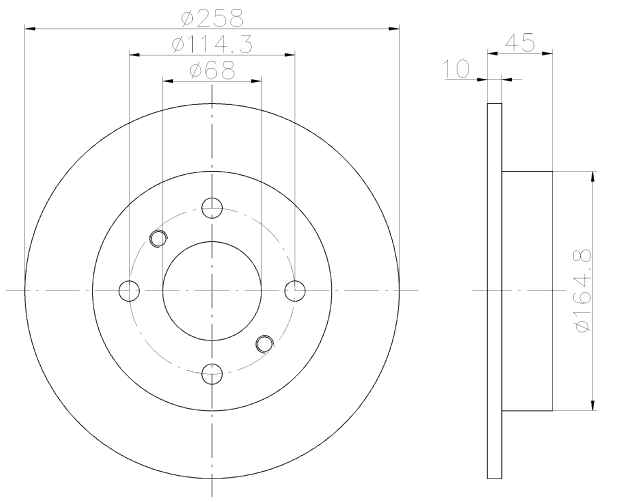

92056503

17 PRO

CHEVROLET, OPEL, VAUXHALL

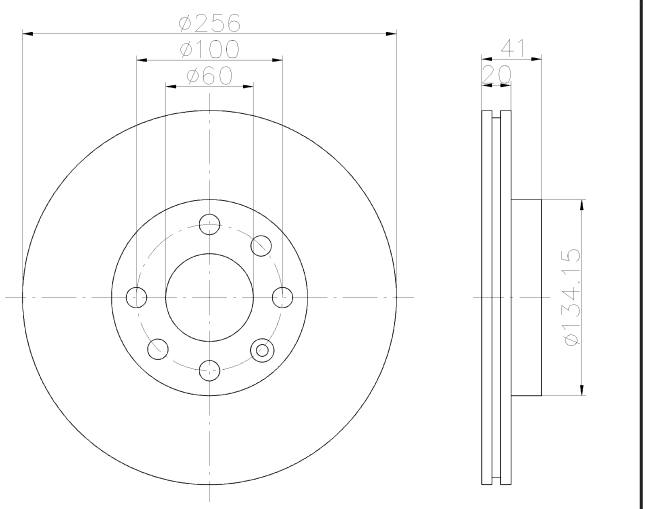

92056600

27.4

MERCEDES-BENZ

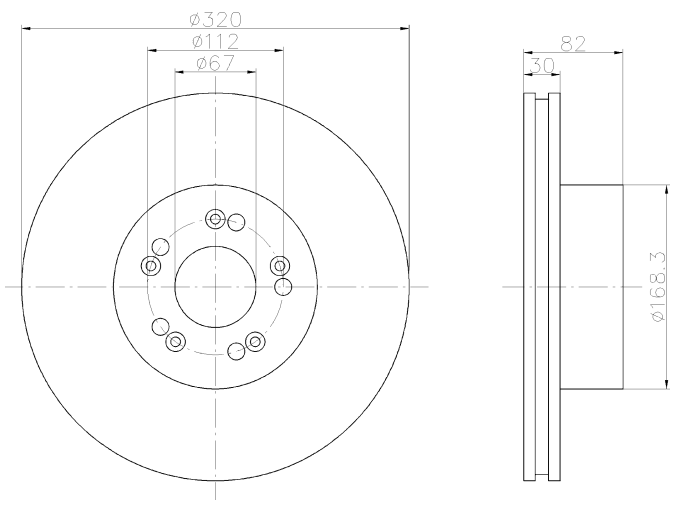

92056800

19.4

MERCEDES-BENZ

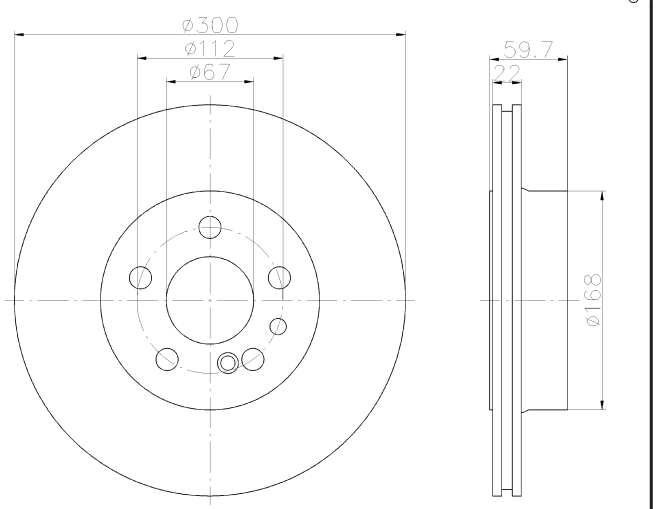

92057000

8

OPEL, VAUXHALL

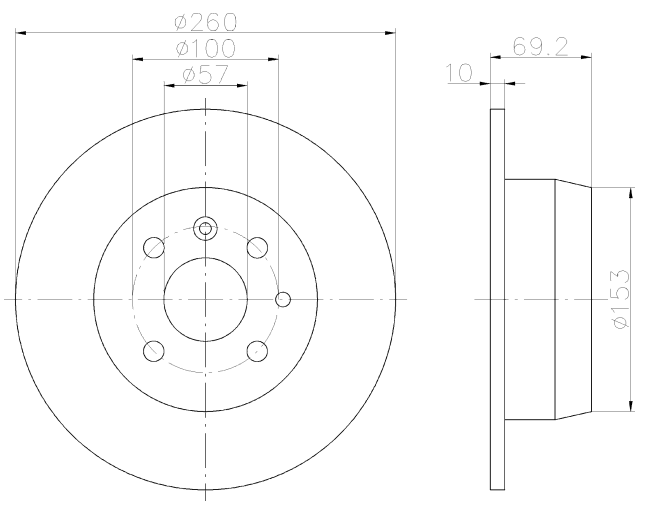

92057100

20

SEAT, VOLKSWAGEN

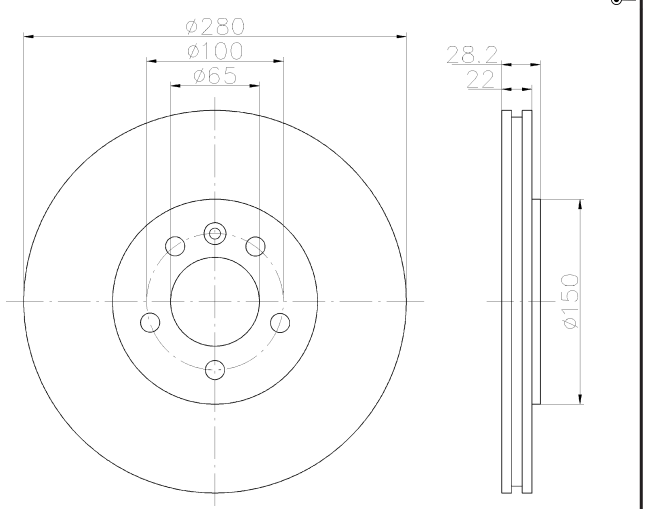

Illustrations

92057200

8

SEAT, VOLKSWAGEN

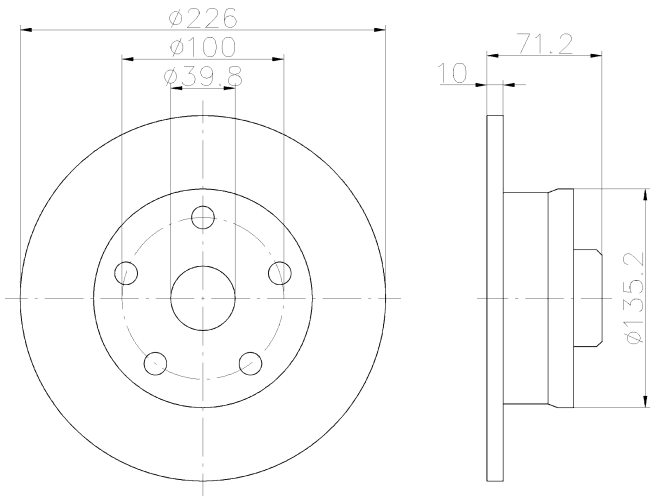

92057403

13 PRO

AUDI

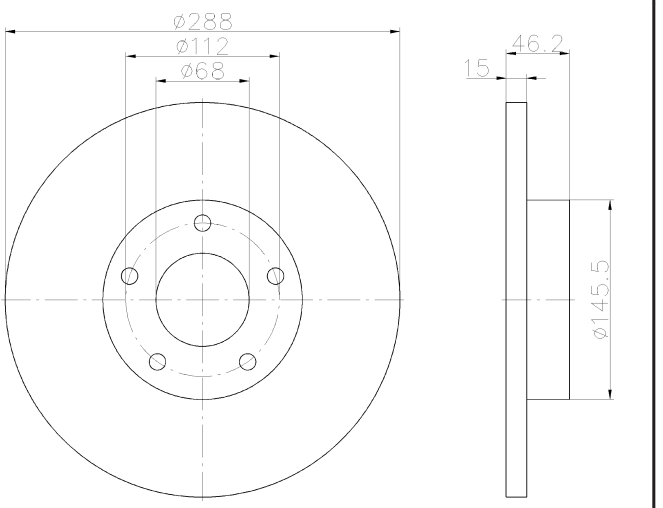

92057503

8 PRO

AUDI, AUDI (FAW), SKODA, VOLKSWAGEN, VOLKSWAGEN (SVW)

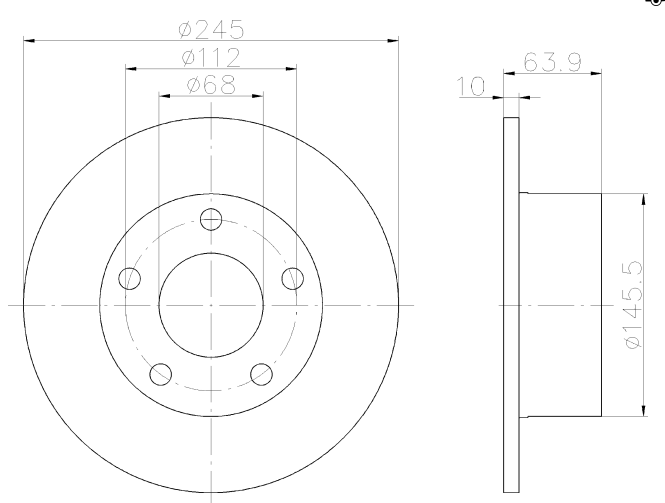

92057603

23 PRO

AUDI, SEAT, VOLKSWAGEN

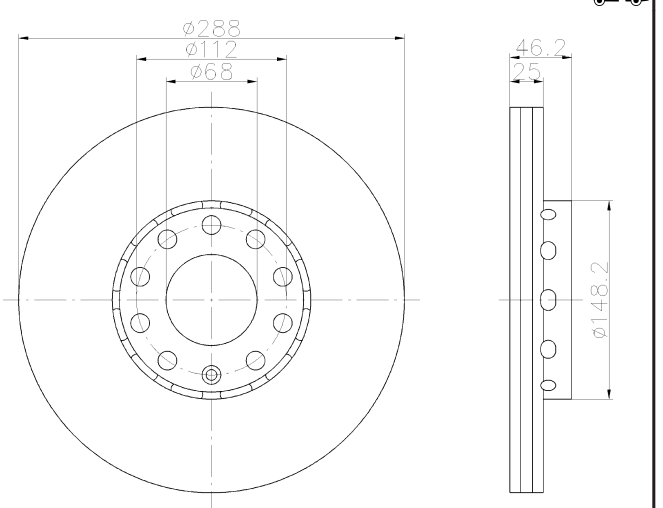

92057605

23 PRO

AUDI, SEAT, VOLKSWAGEN

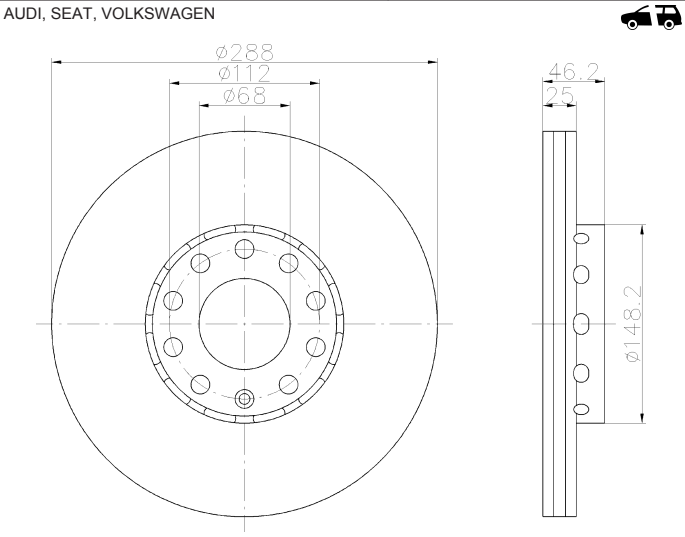

92057700

25

OPEL, VAUXHALL

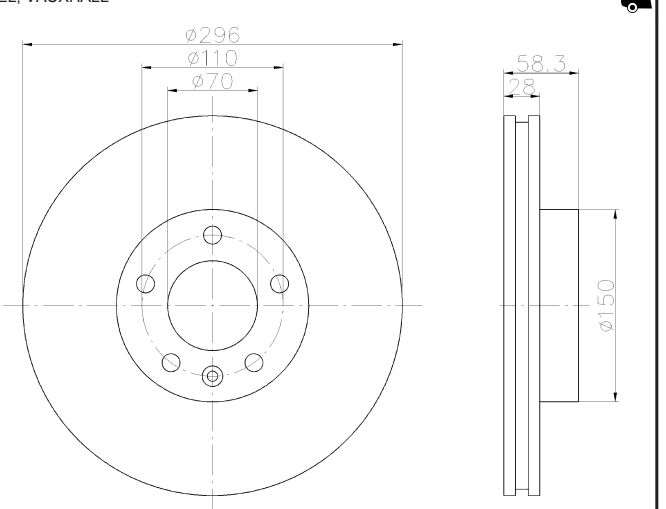

Illustrations

92057900

25.4

MERCEDES-BENZ

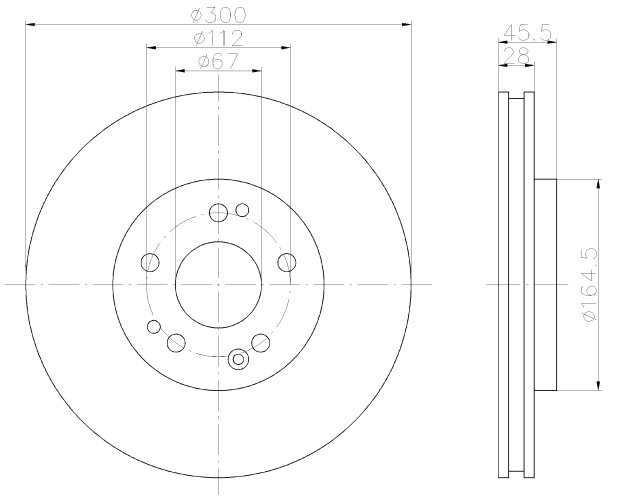

92058000

7.3

MERCEDES-BENZ

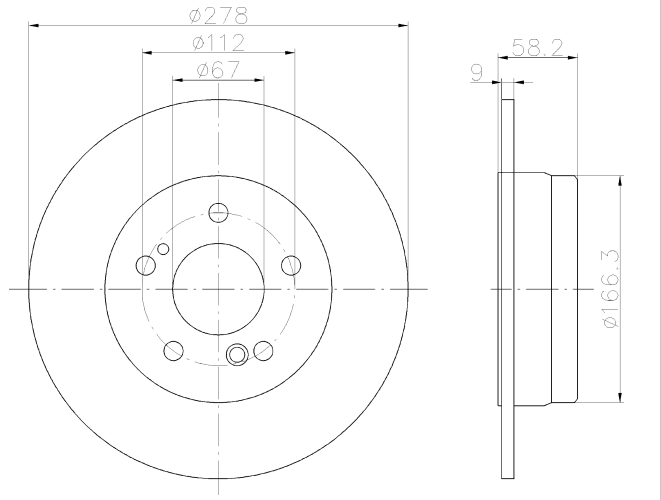

92058300

28.4

ALPINA, BMW

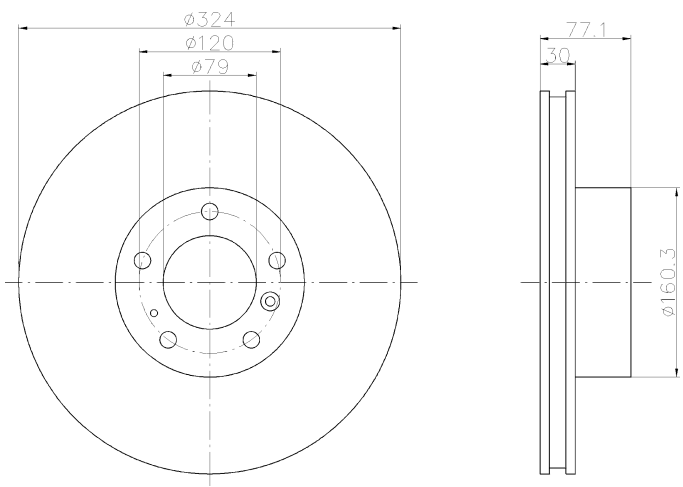

92058400

10.4

BMW

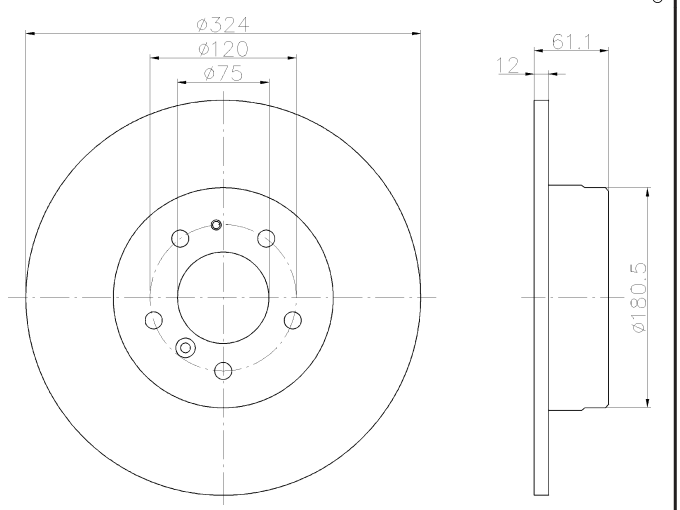

92058500

15

VOLKSWAGEN

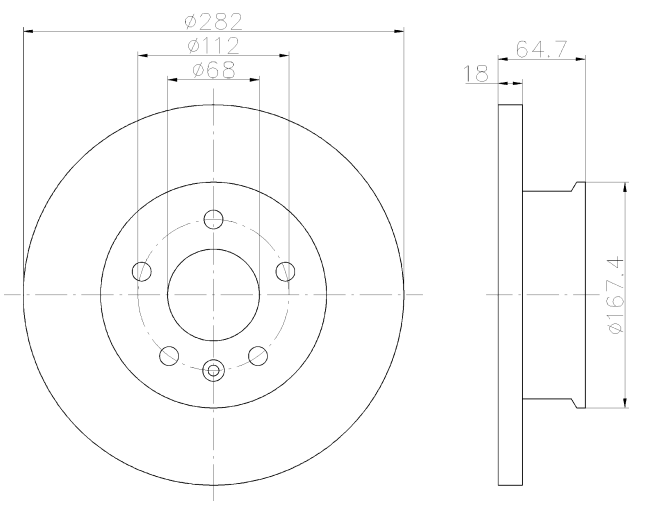

92059000

24

NISSAN

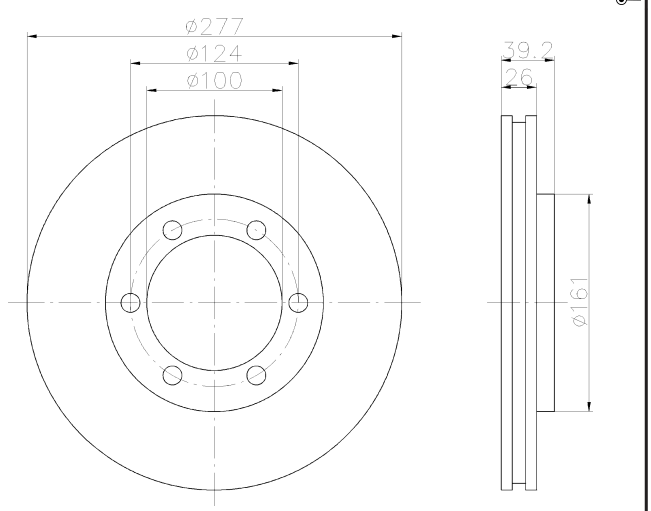

92059003

24 PRO

NISSAN

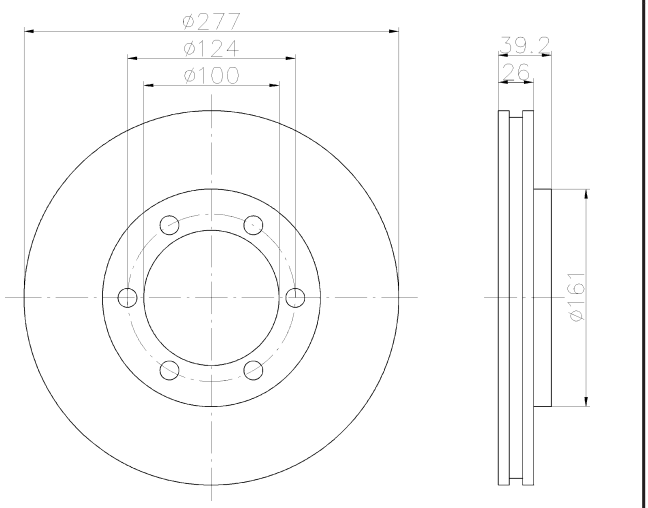

92059303

10 PRO

MERCEDES-BENZ

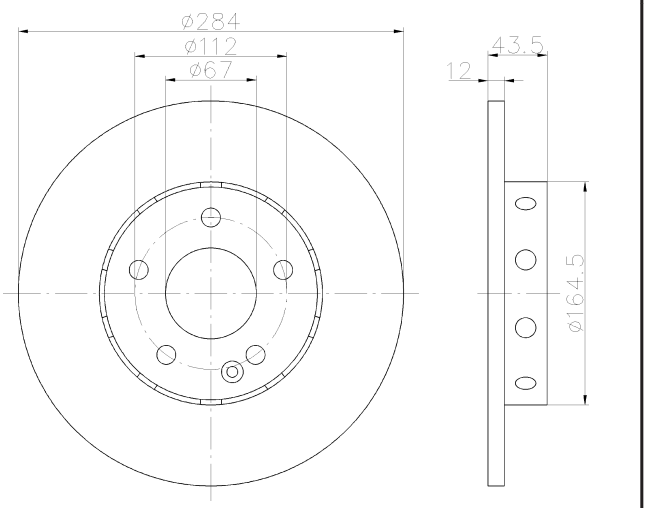

92059403

19.4 PRO

MERCEDES-BENZ

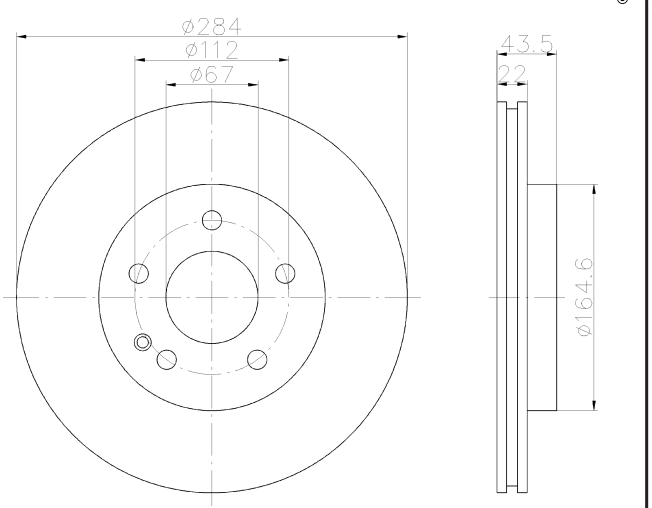

92059503

7.3 PRO

MERCEDES-BENZ

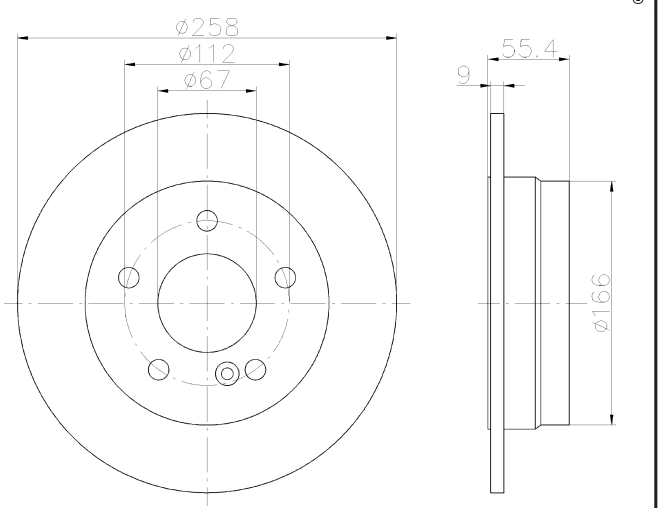

92059600

20

CITROËN, PEUGEOT

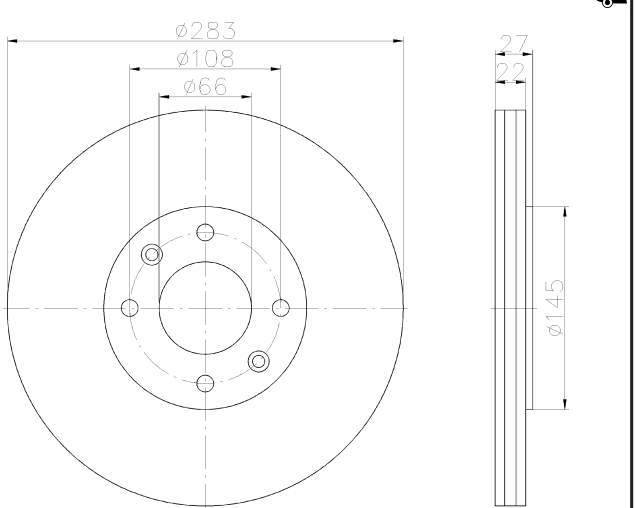

92059700

7

CITROËN

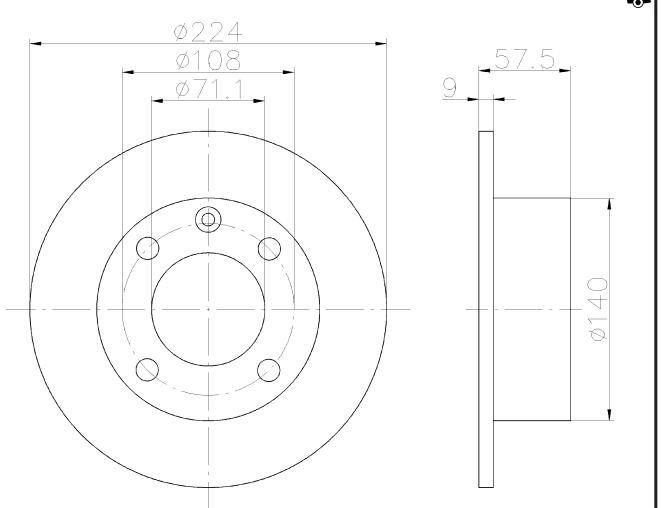

92059900

10.8

CITROËN

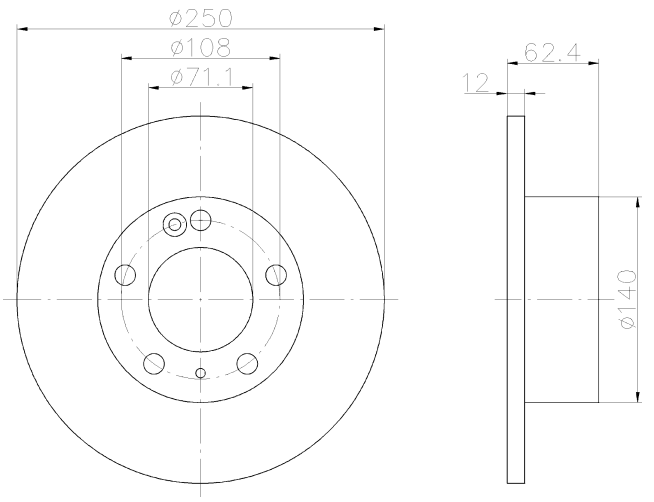

92060100

21.4

MERCEDES-BENZ

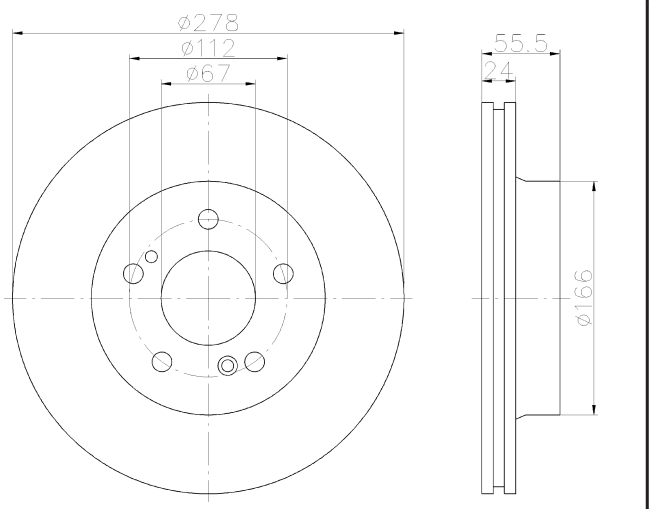

92060500

23

AUDI

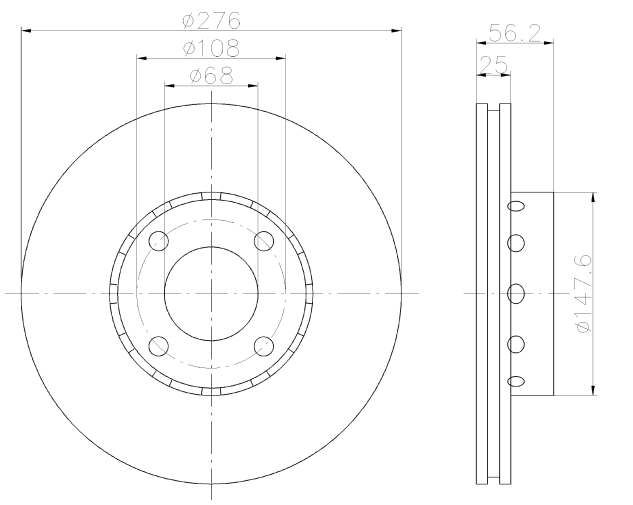

92060600

20

AUDI

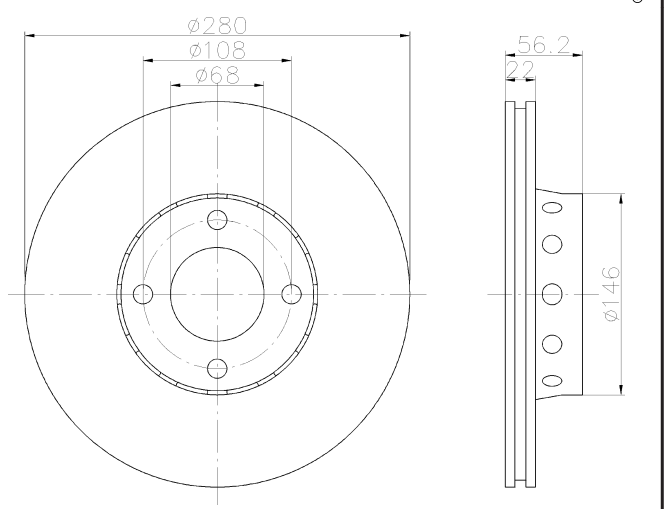

92060800

8

HONDA, LOTUS, MG, ROVER

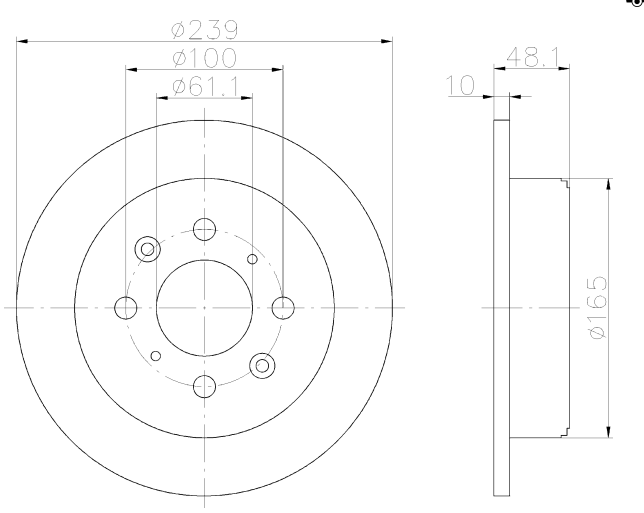

92060903

19 PRO

HONDA, LOTUS, MG, ROVER

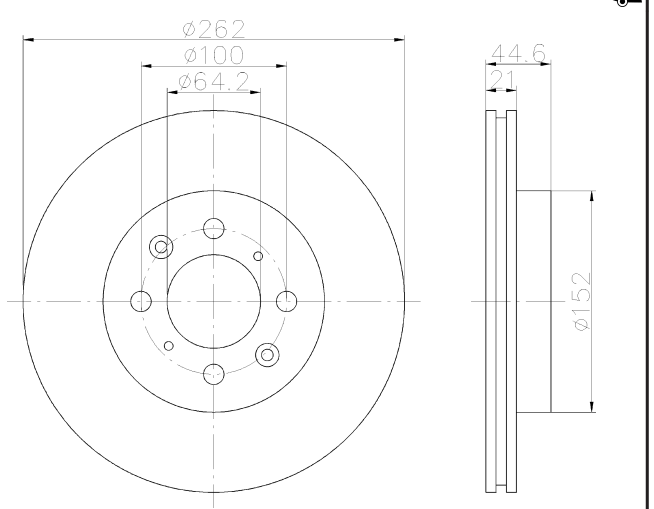

92061103

9.2 PRO

ALFA ROMEO, FIAT, FORD, LANCIA, ZASTAVA

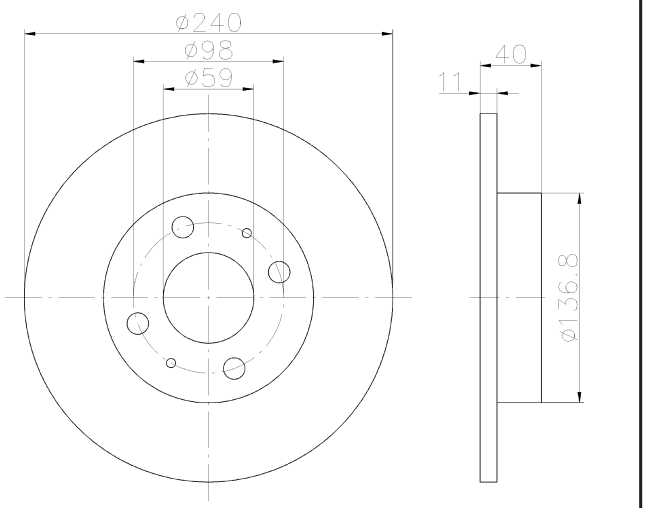

92061300

22

LAND ROVER

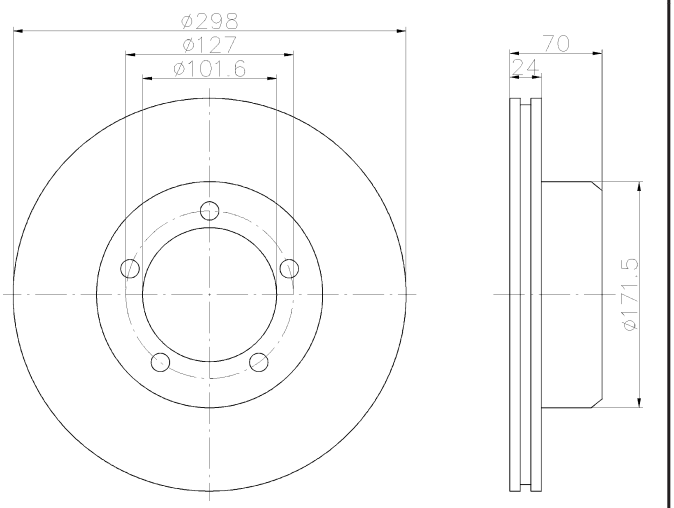

92061500

16

MAZDA

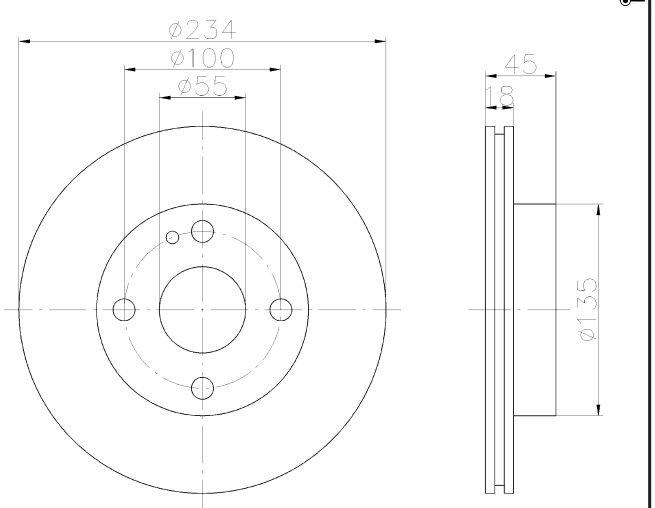

92061600

20

FORD AUSTRALIA, MAZDA

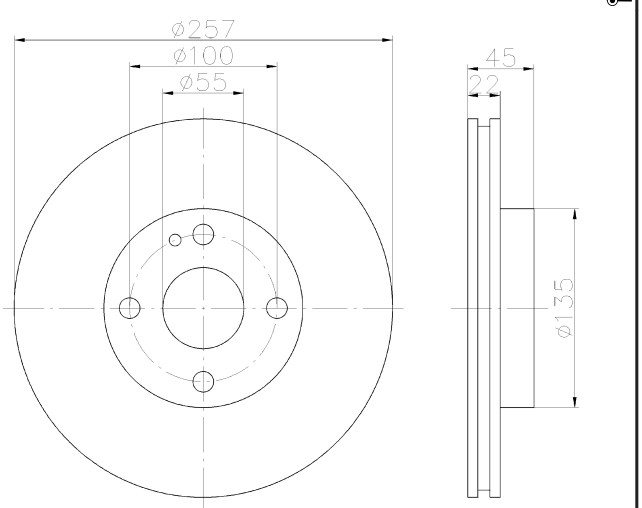

92061700

8

FORD AUSTRALIA, MAZDA

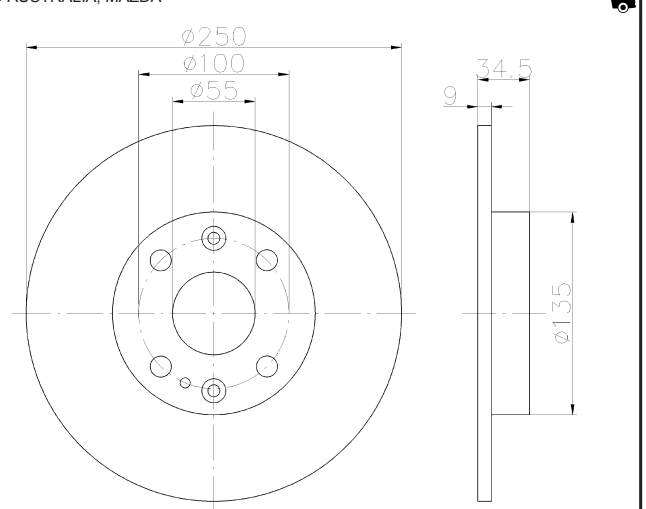

92062000

22

EUNOS, FORD AUSTRALIA, MAZDA

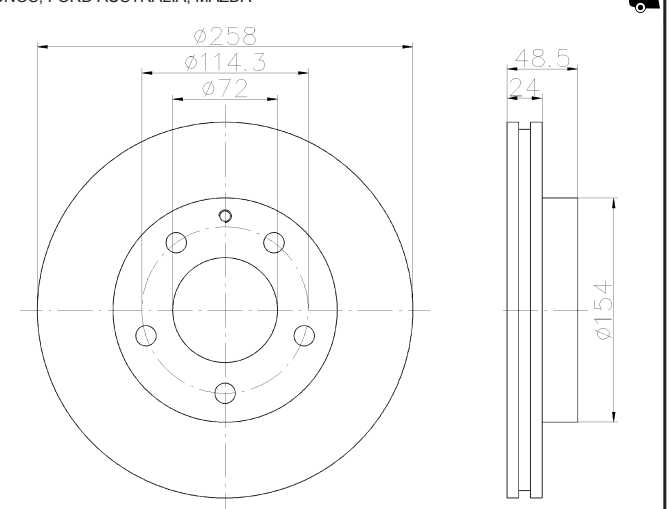

92062100

8

EUNOS, FORD AUSTRALIA, MAZDA

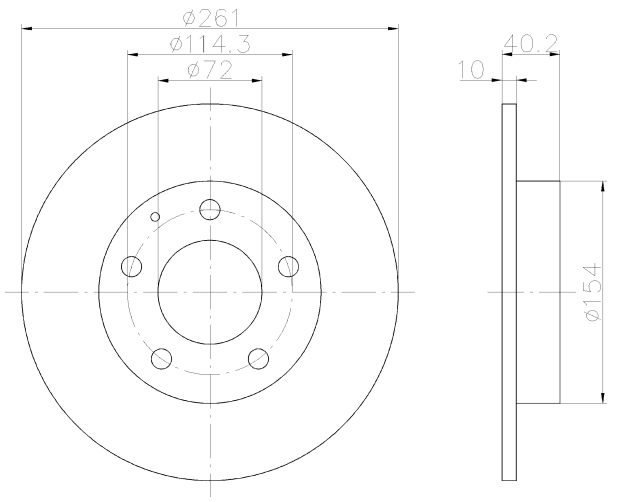

92062600

17.7

HYUNDAI

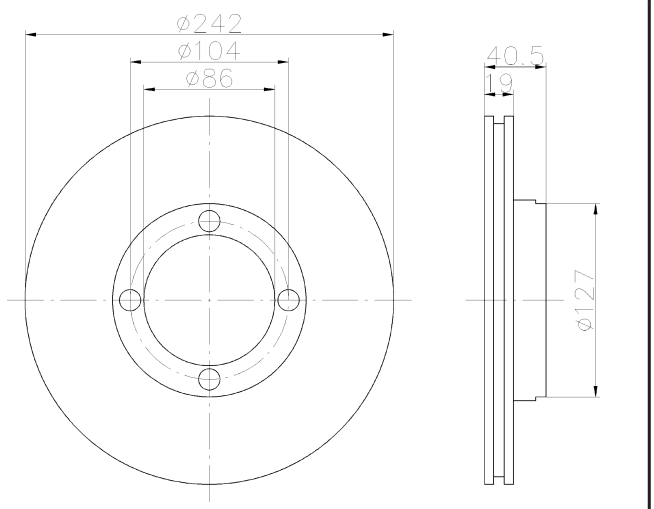

92062700

20

HYUNDAI

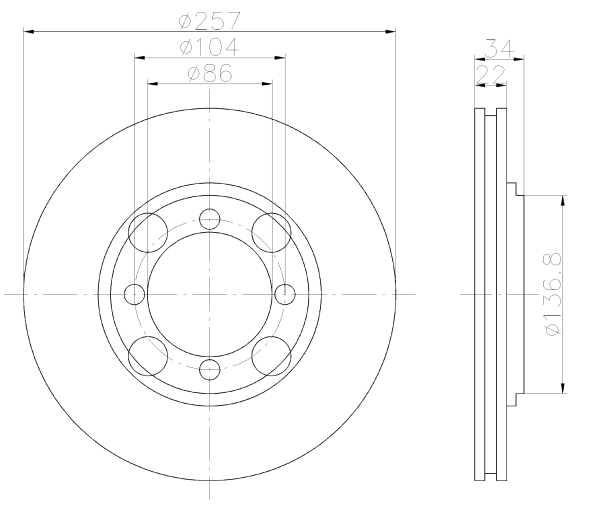

92063000

22.4

MITSUBISHI

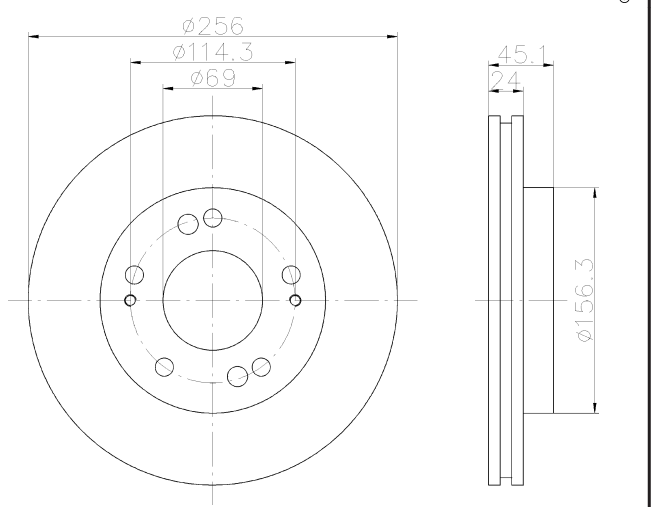

92063100

8.4

MITSUBISHI

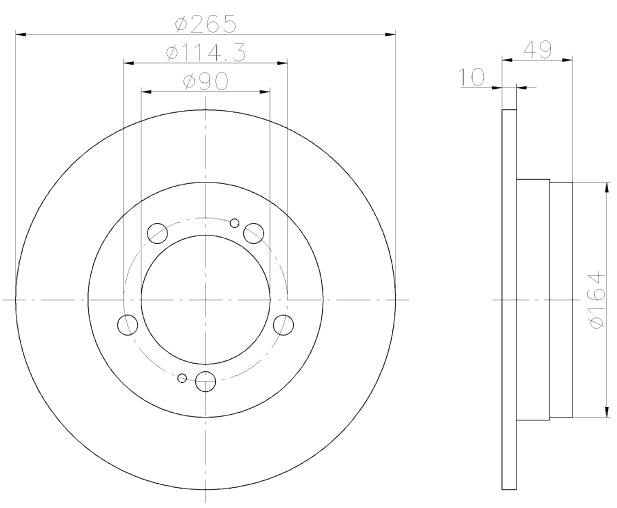

92063200

16

NISSAN

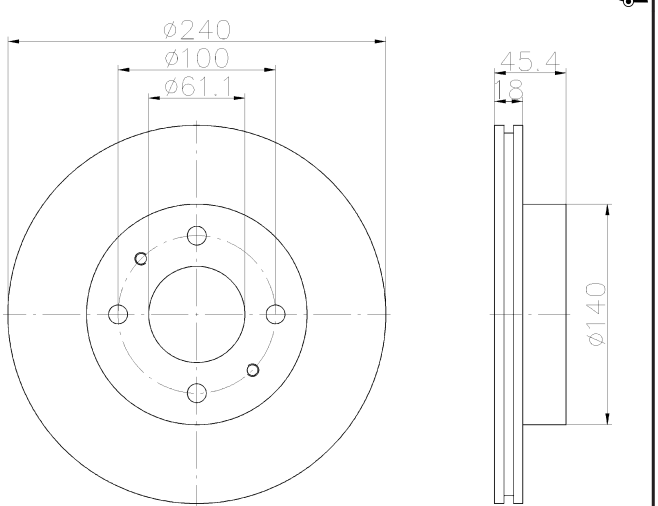

92063300

10

NISSAN

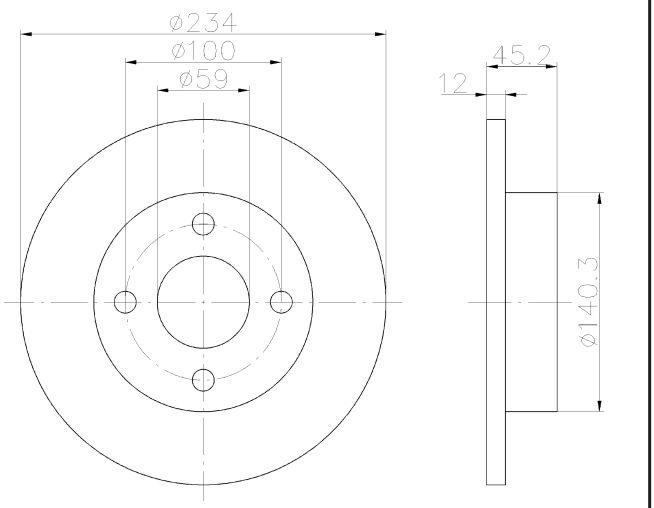

92063503

22.2 PRO

FORD, FORD AUSTRALIA

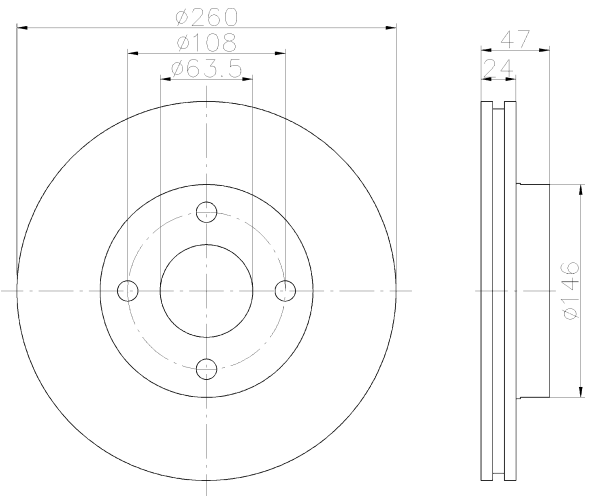

92063603

18 PRO

AC, FORD, FORD AUSTRALIA, FORD USA, MERCURY

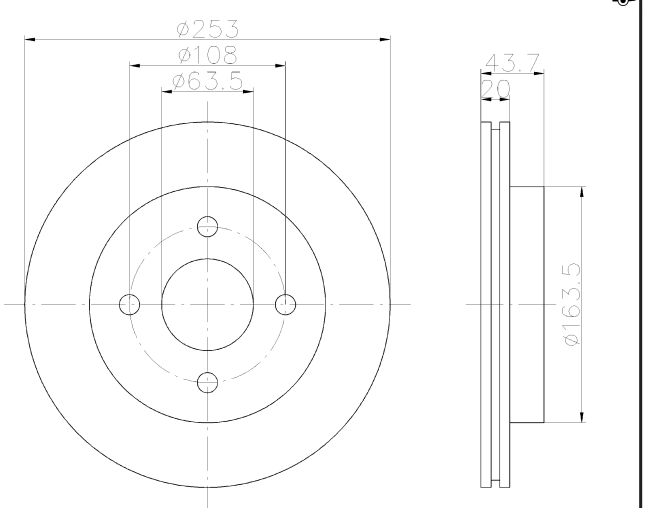

92064000

28

MERCEDES-BENZ

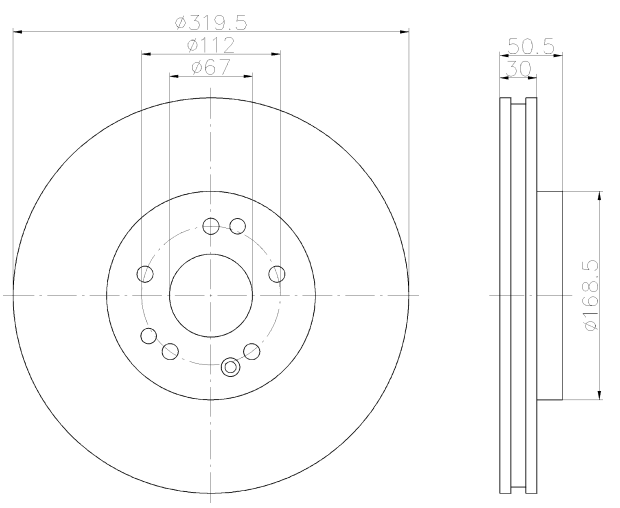

92064100

28

MERCEDES-BENZ

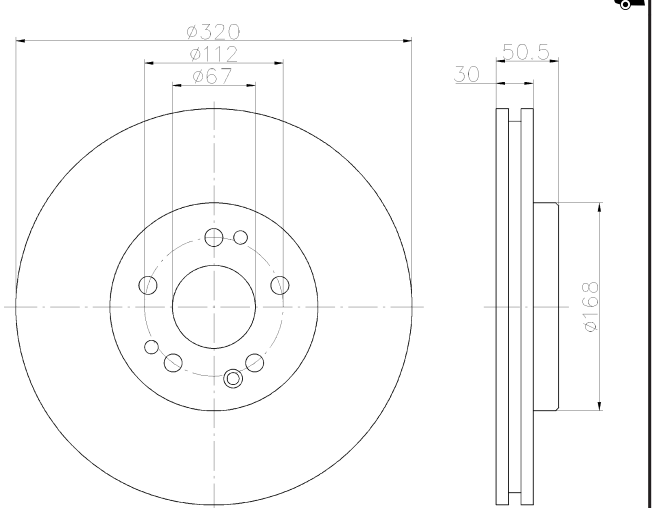

92064200

19.4

MERCEDES-BENZ

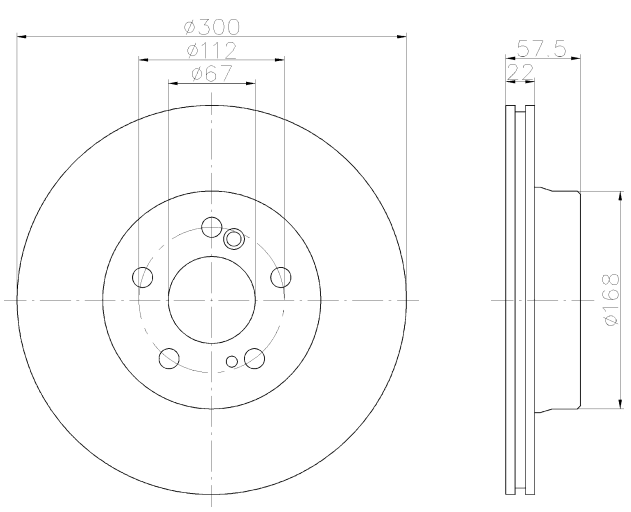

92064300

22.2

FORD

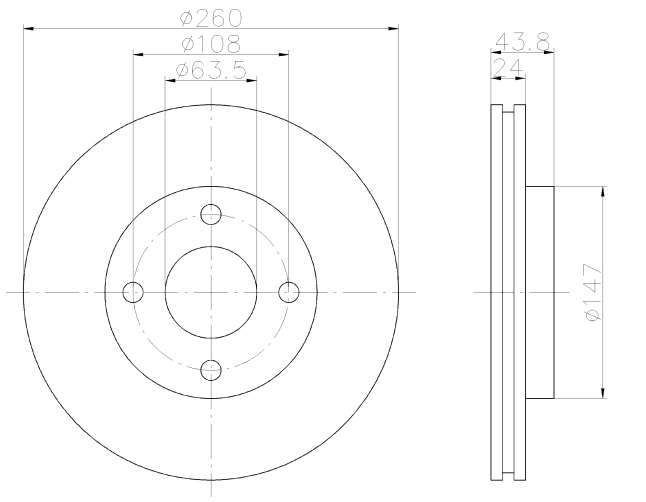

92064400

8.6

FORD

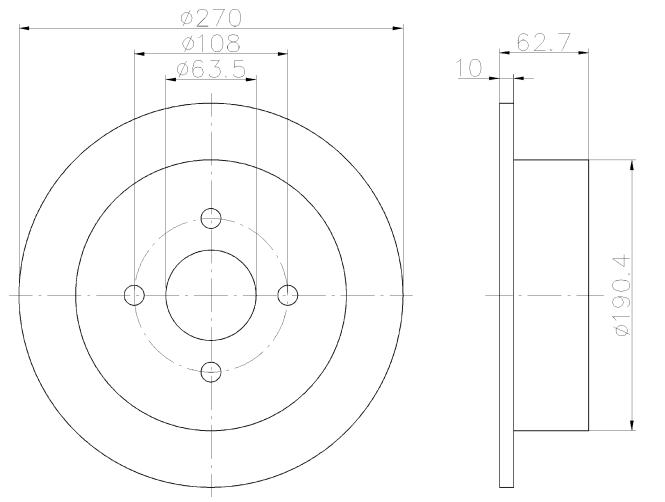

92064803

19.8 PRO

RENAULT

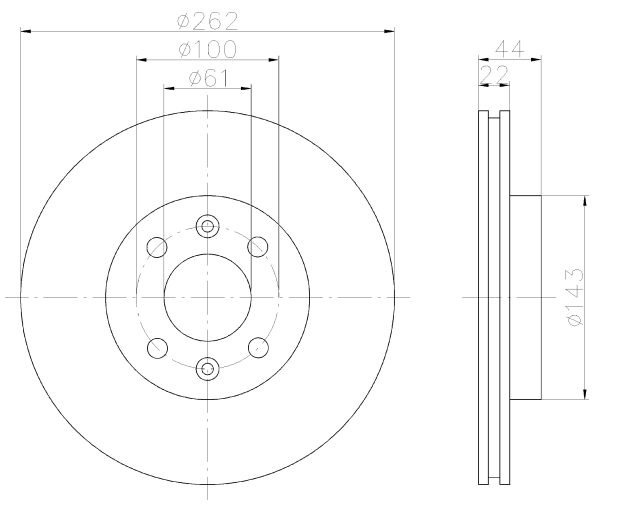

92064903

9.5 PRO

RENAULT

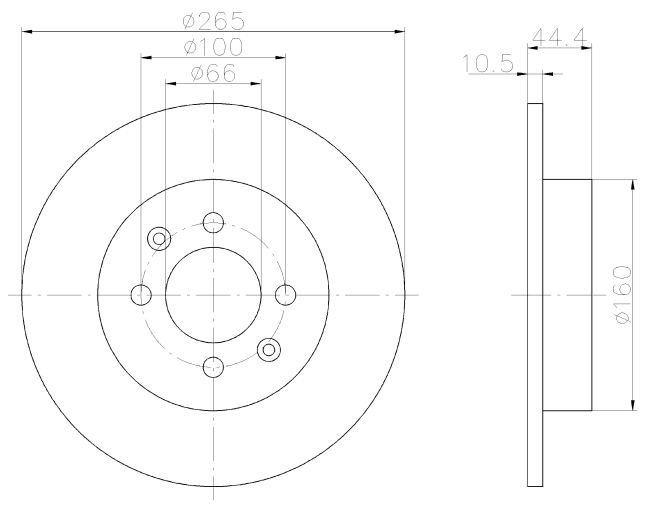

92065000

19.8

RENAULT

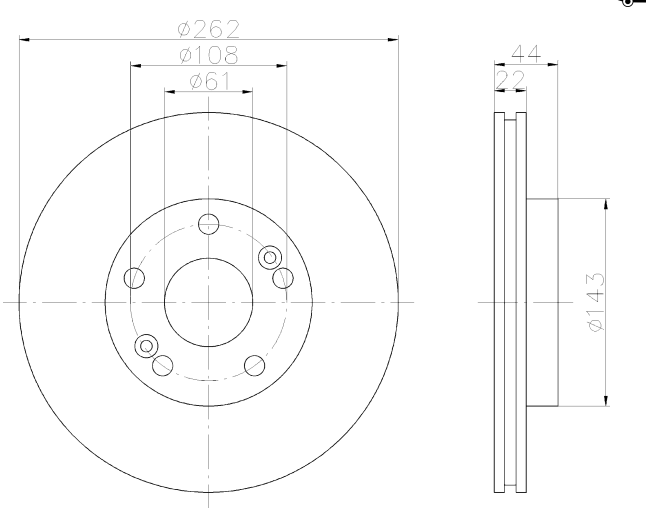

92065100

9.5

RENAULT

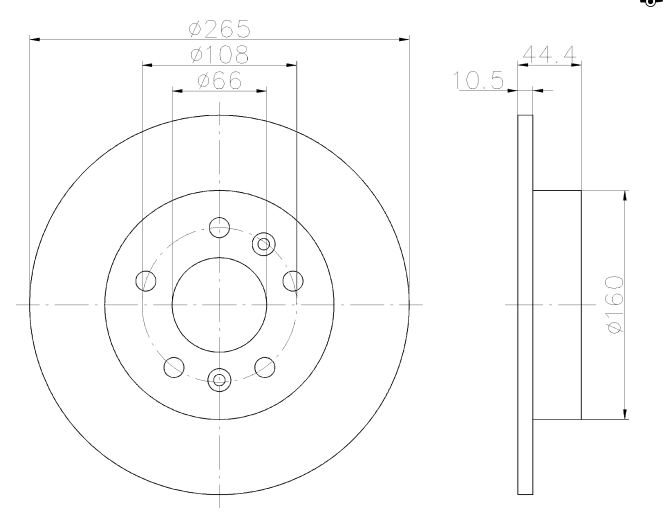

92066003

8 PRO

SUZUKI

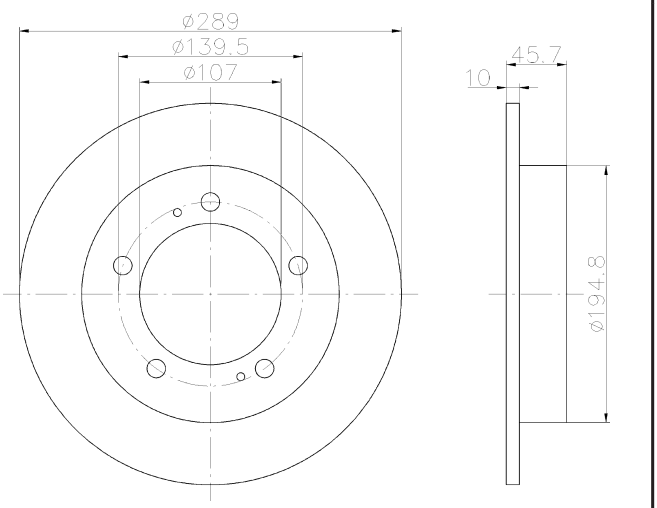

92066703

23 PRO

VOLVO

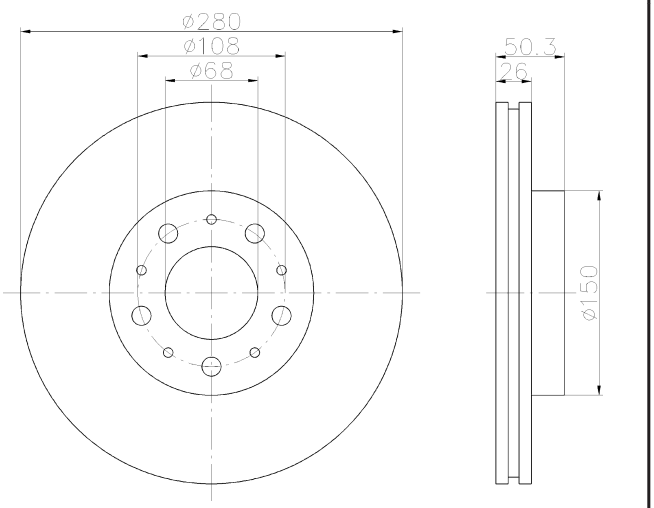

92066803

8.4 PRO

VOLVO

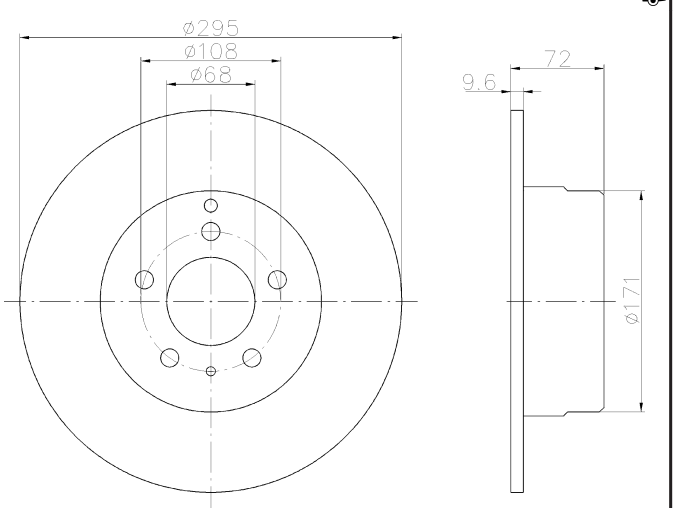

92066903

21 PRO

OPEL, VAUXHALL

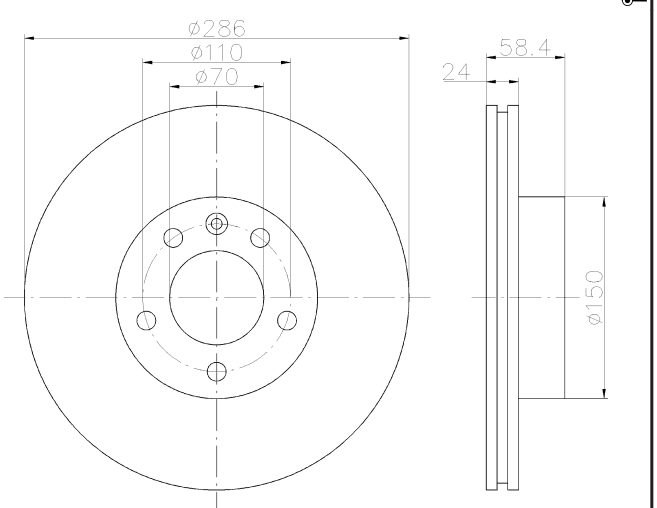

92067003

10 PRO

OPEL, VAUXHALL

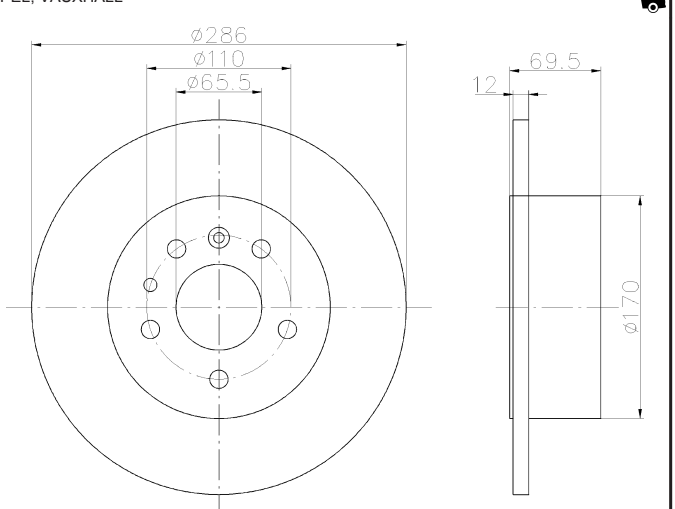

92067300

9

MEGA

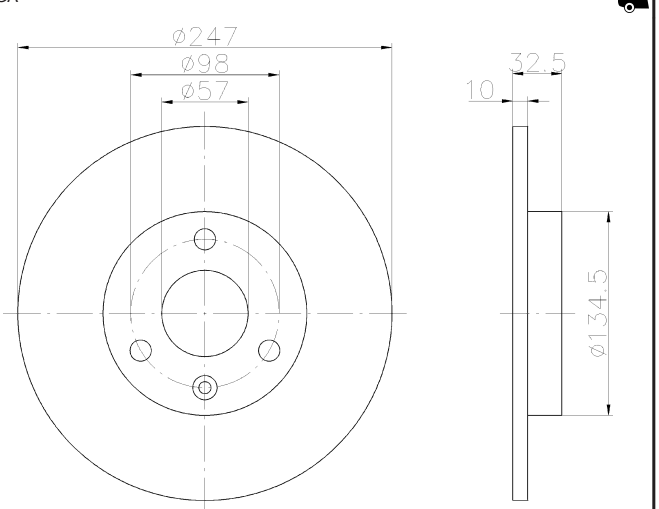

92068503

18.2 PRO

ALFA ROMEO, FIAT, LANCIA

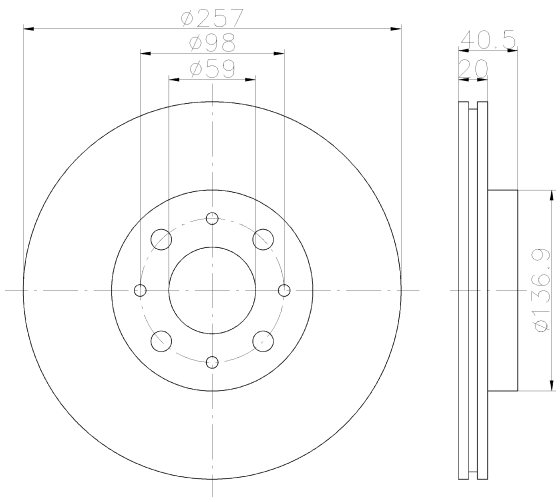

92069000

15

SUBARU, SUZUKI

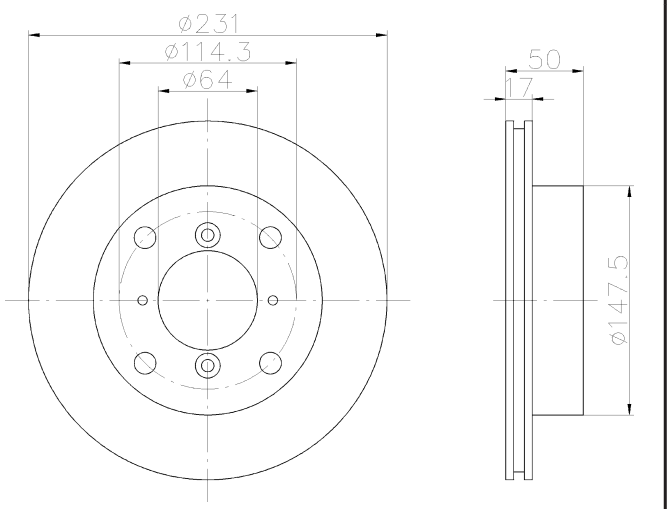

92069100

16.5

SUZUKI

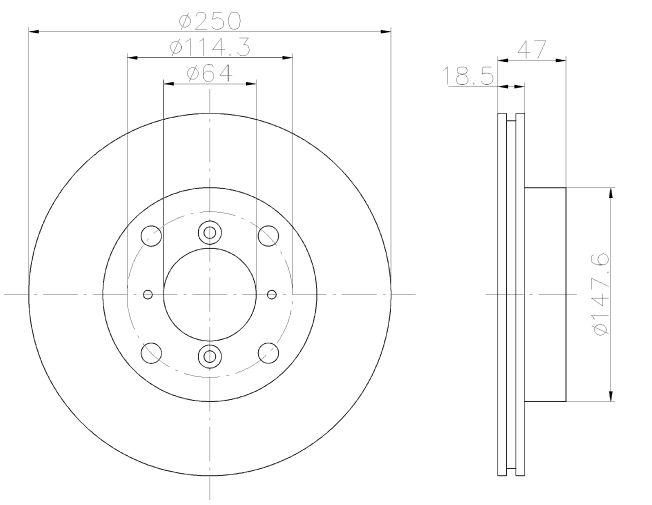

92069603

20.2 PRO

ALFA ROMEO, CITROËN, FIAT, LANCIA, PEUGEOT

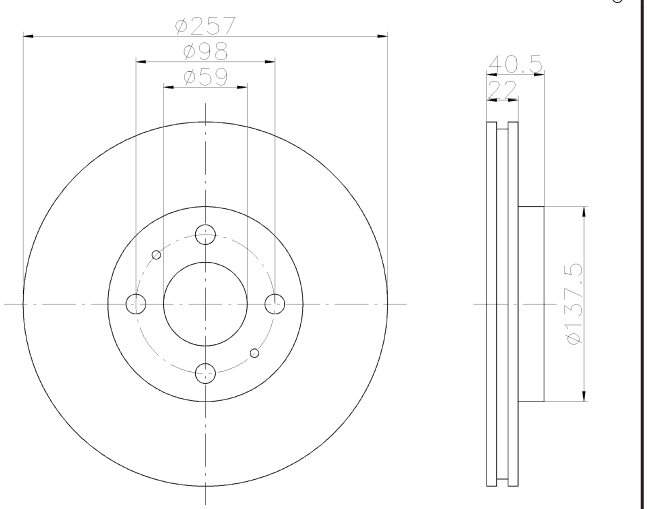

92069900

20

NISSAN

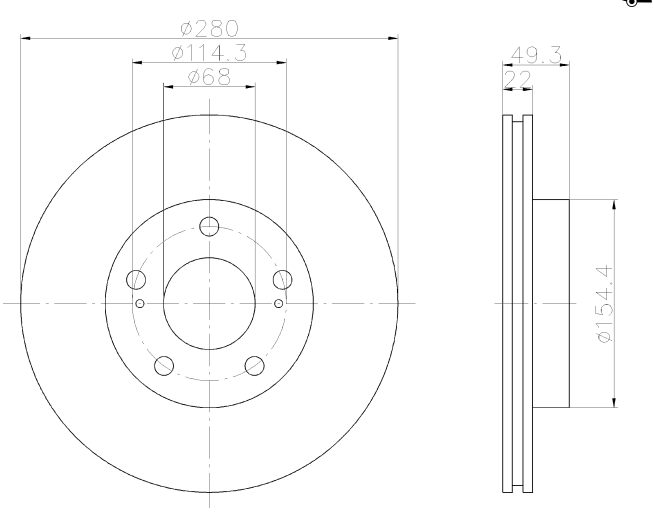

92070100

20

NISSAN

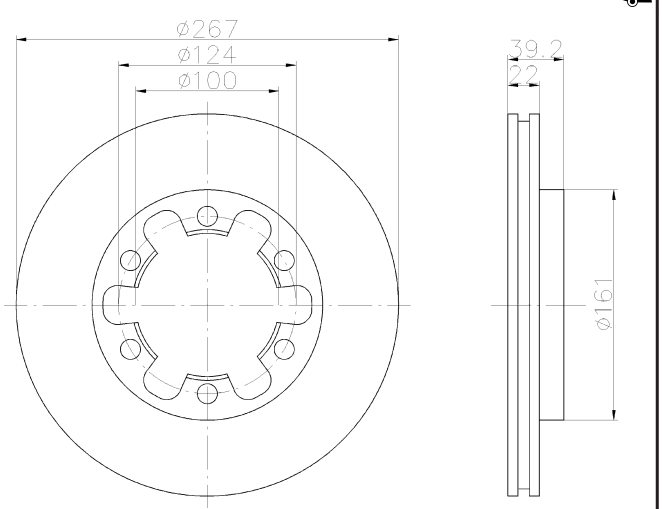

92070300

7

RENAULT

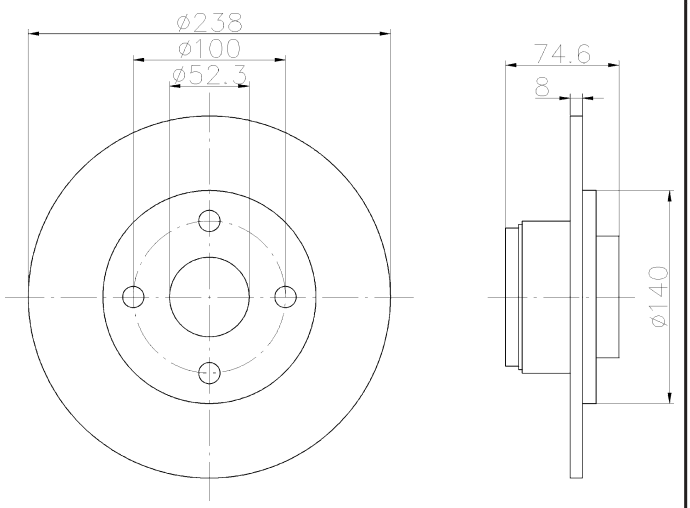

92070500

10.7

ROVER

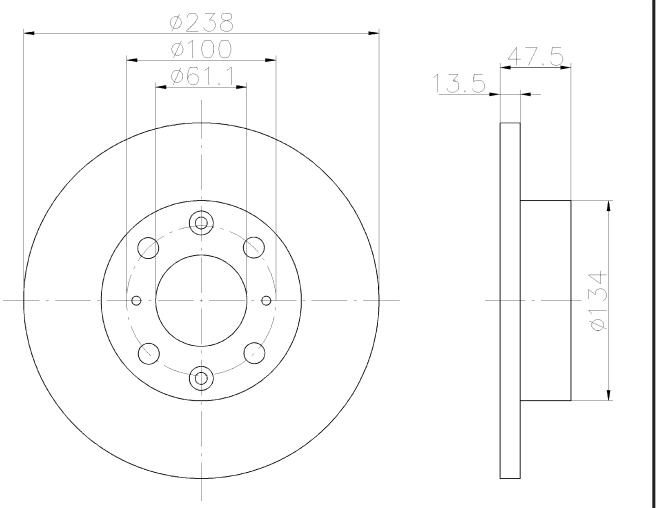

92070600

19

ROVER

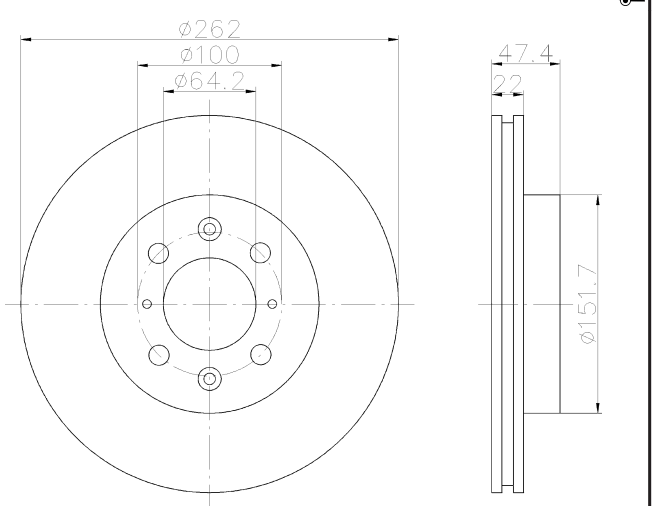

92070800

9

TOYOTA

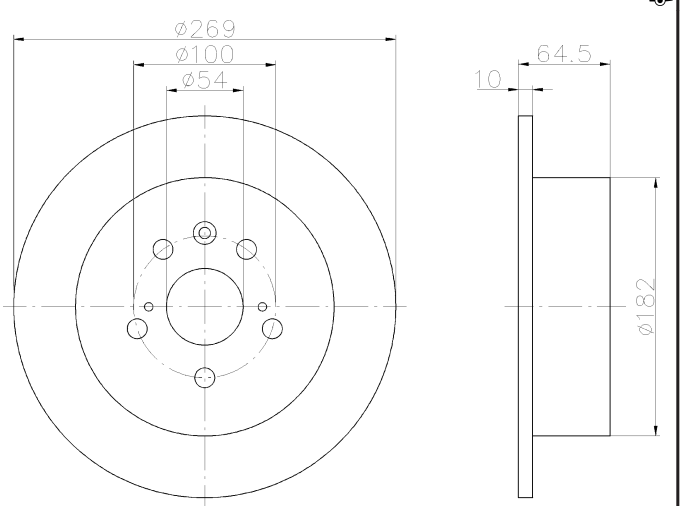

92071100

26.4

BMW, WIESMANN

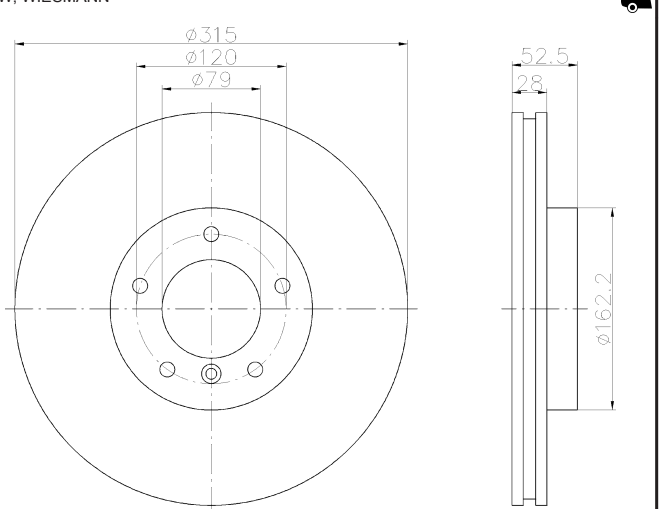

92071103

PRO

26.4

BMW, WIESMANN

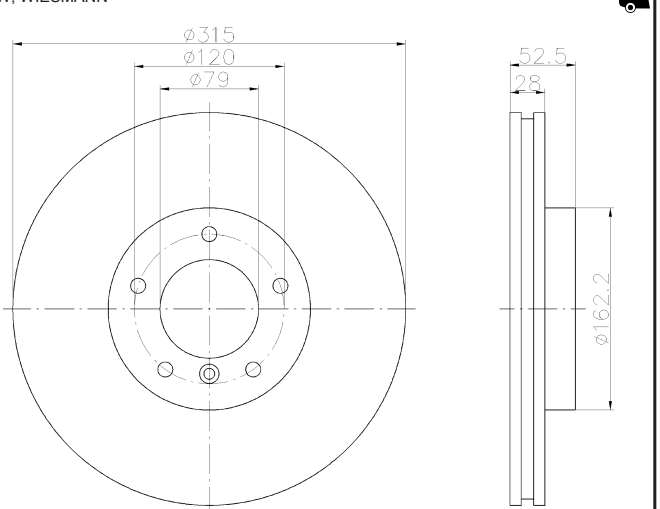

92071200

26.4

BMW, WIESMANN

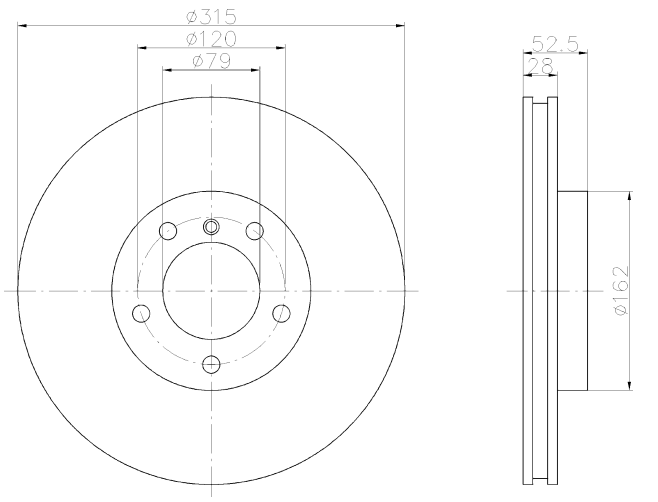

92071203

PRO

26.4

BMW, WIESMANN

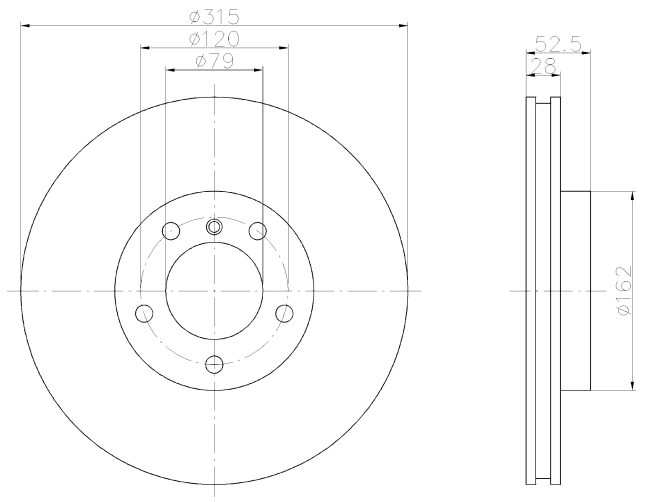

92071403

PRO

26.4

BMW

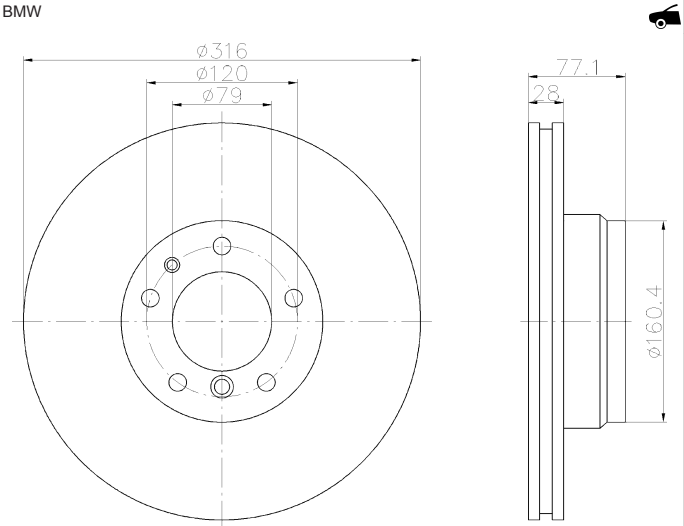

92071500

20

FORD AUSTRALIA, MAZDA

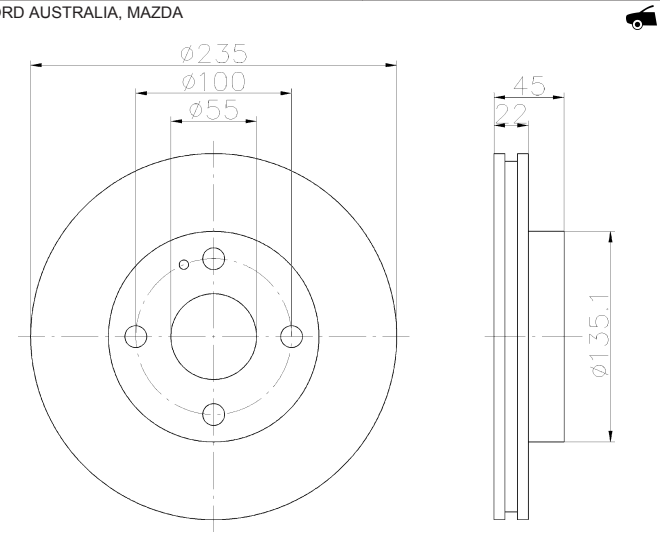

92071603

PRO

11

AUDI

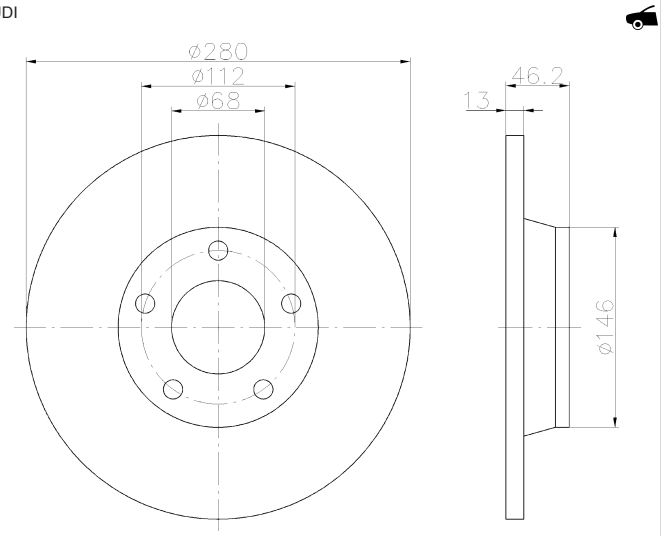

92071903

PRO

8

SEAT, VOLKSWAGEN

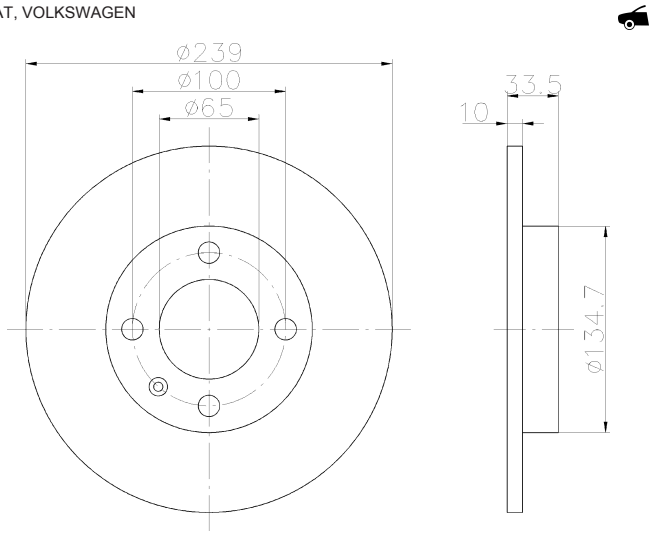

92072003

16 PRO

SEAT, VOLKSWAGEN

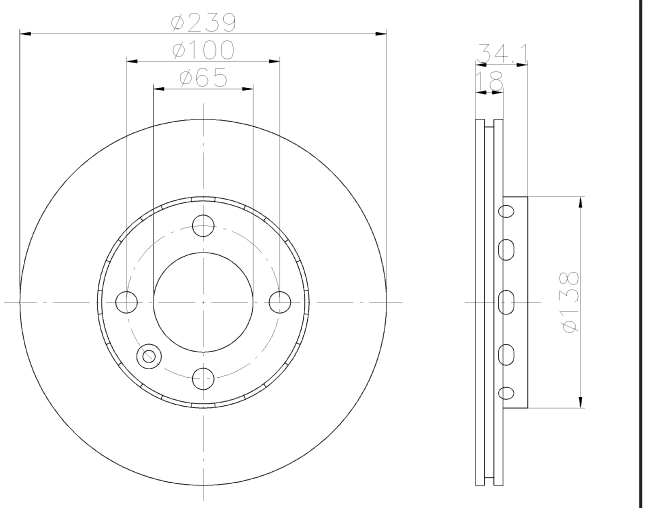

92072103

8 PRO

AUDI

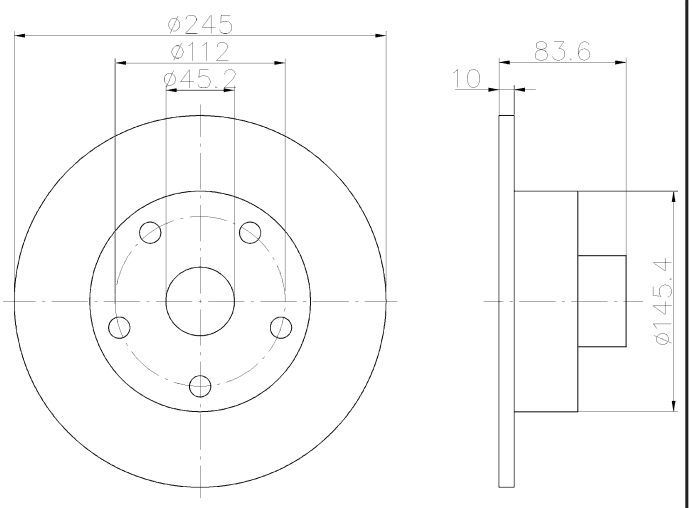

92072200

30.4

BMW

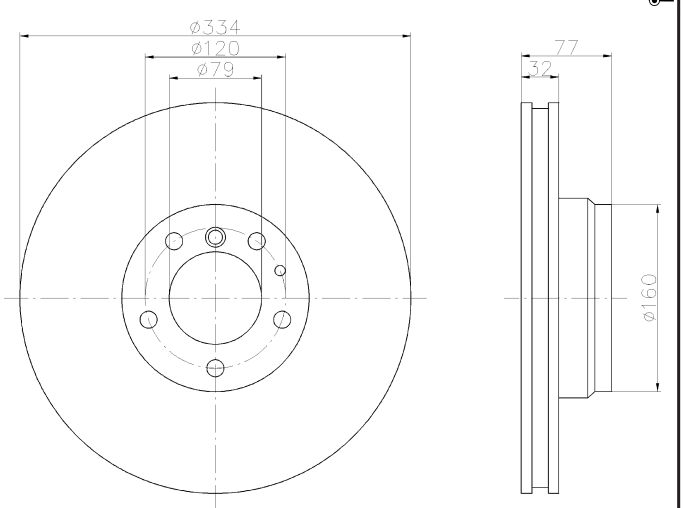

92072303

8.4 PRO

BMW

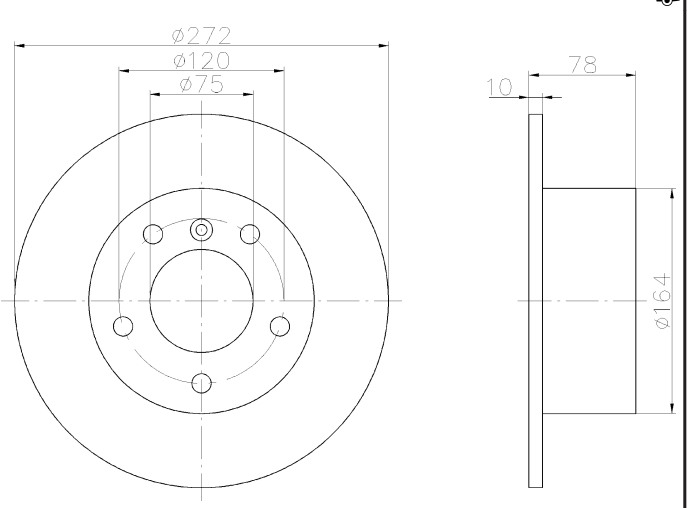

92072403

17.4 PRO

BMW, BMW (BRILLIANCE)

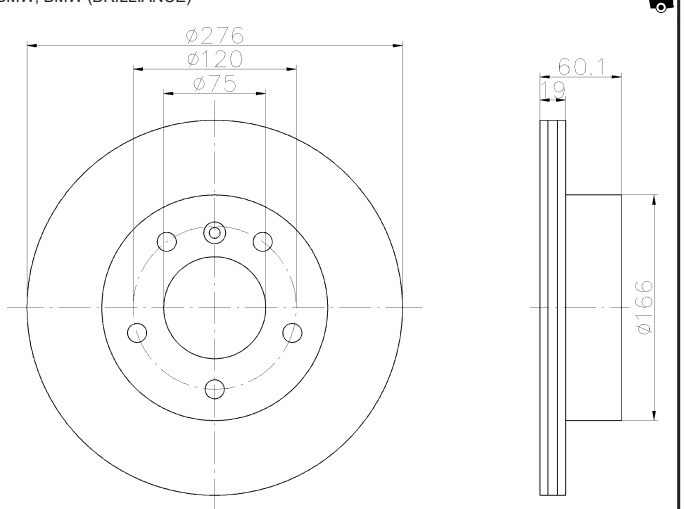

92072703

8.3 PRO

MERCEDES-BENZ

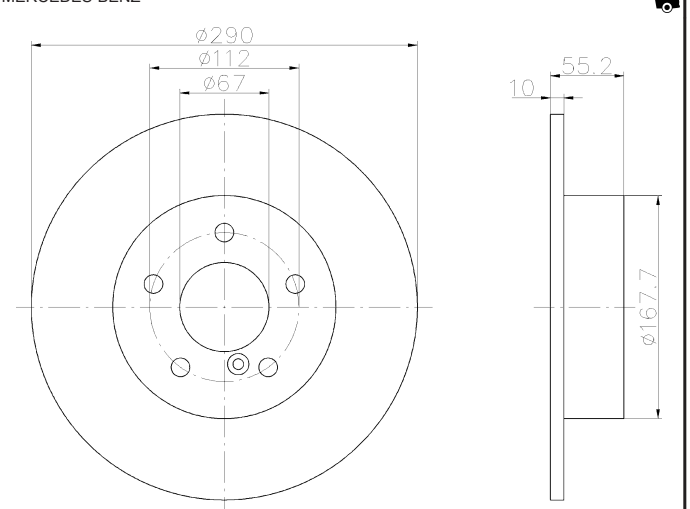

92072800

23

VOLKSWAGEN

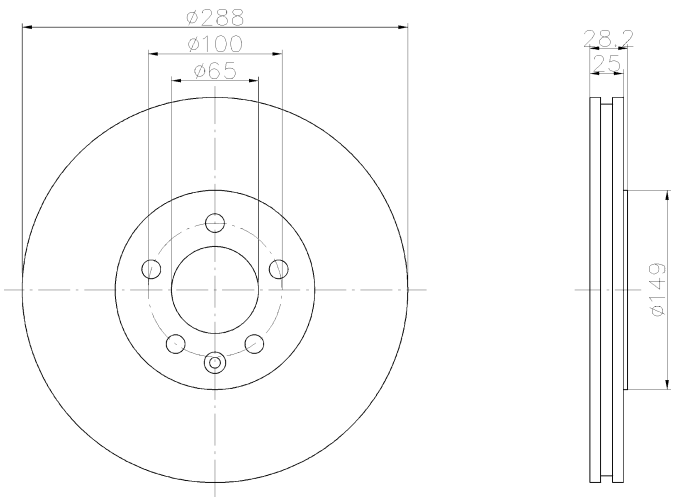

92073100

25.4

MERCEDES-BENZ

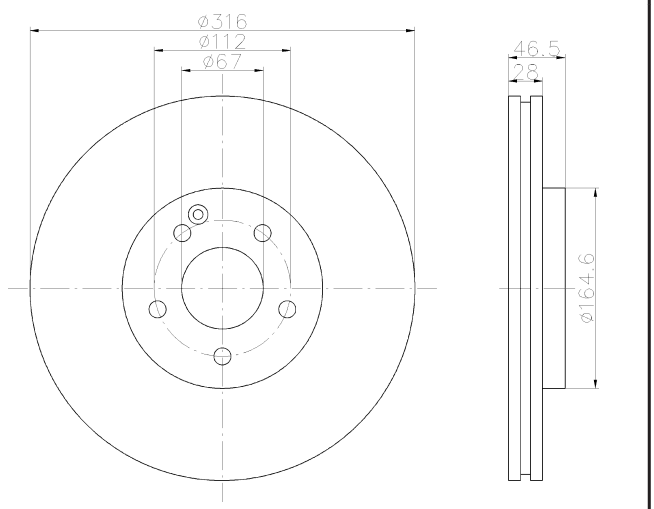

92073200

28

AUDI

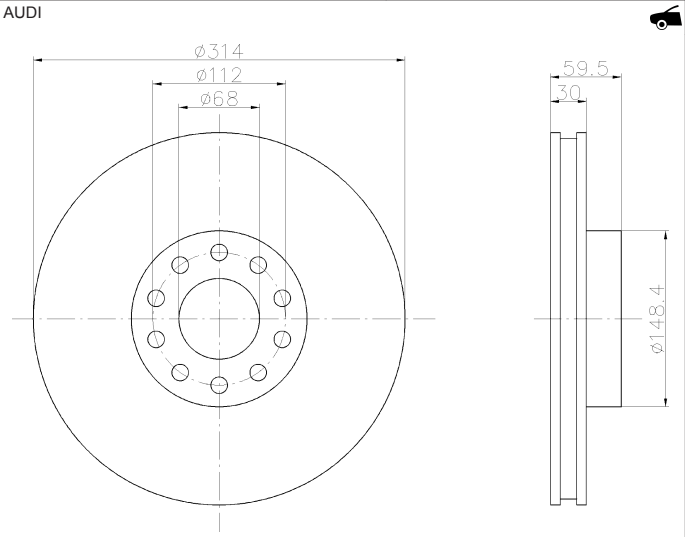

92073703

15.9 PRO

CITROËN, FIAT, PEUGEOT

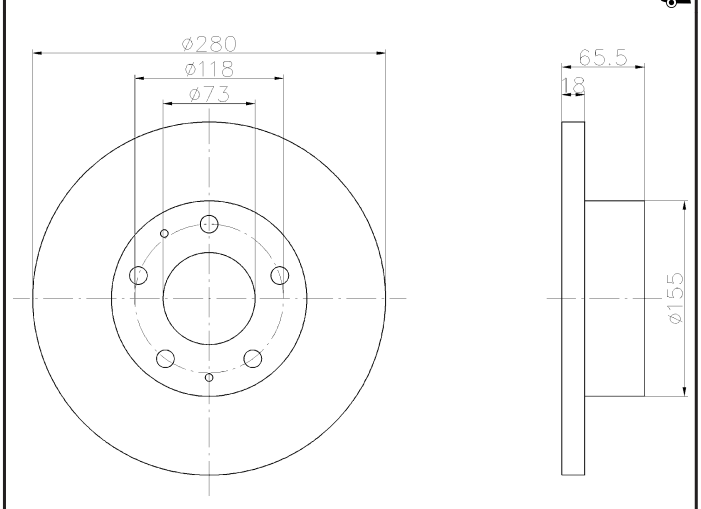

92074003

24.2 PRO

CITROËN, FIAT, LANCIA, PEUGEOT

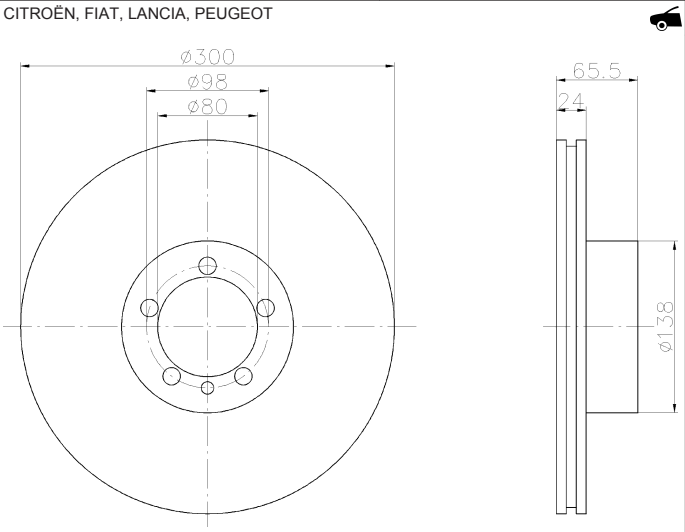

92074100

8

CITROËN, FIAT, LANCIA, PEUGEOT

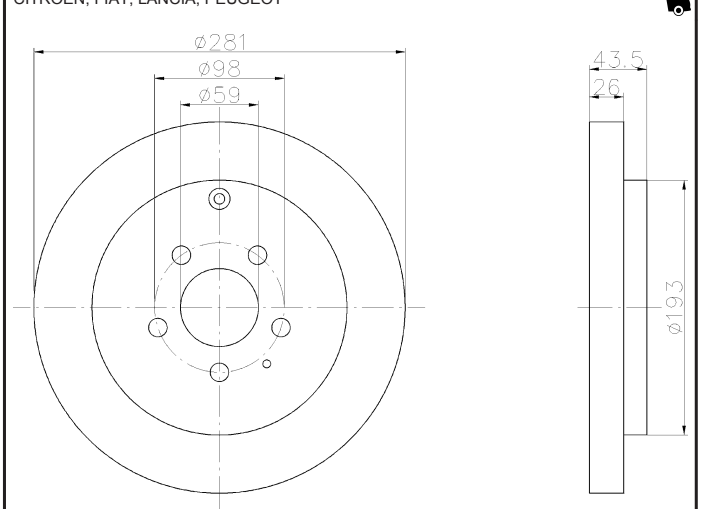

92074203

21 PRO

FORD, SEAT, VOLKSWAGEN

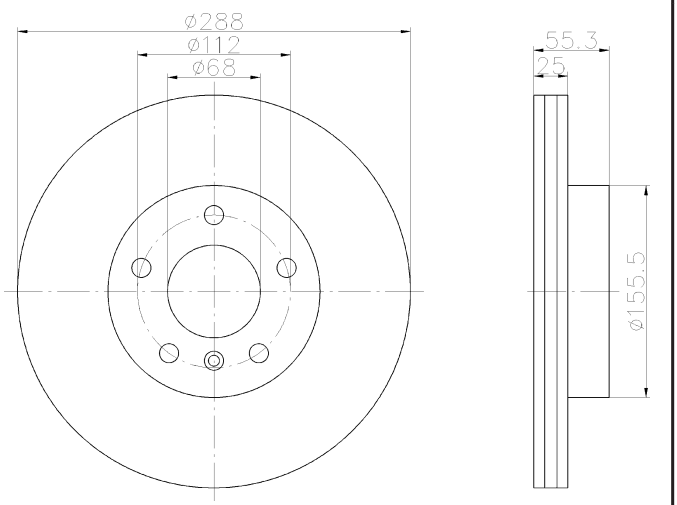

92074303

8 PRO

FORD, SEAT, VOLKSWAGEN

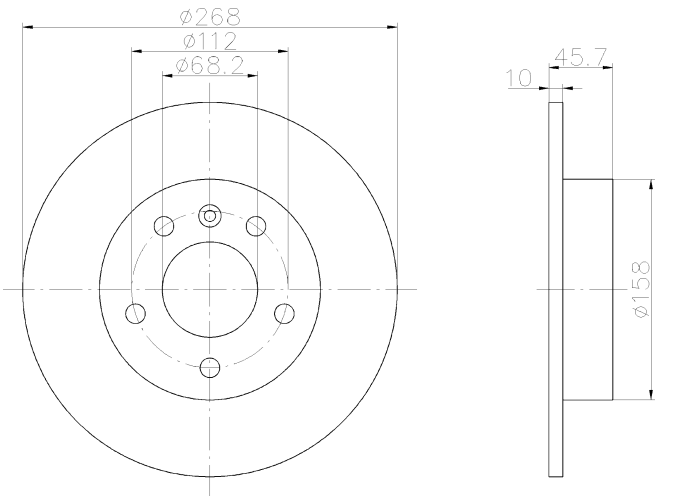

92074403

19 PRO

MERCEDES-BENZ

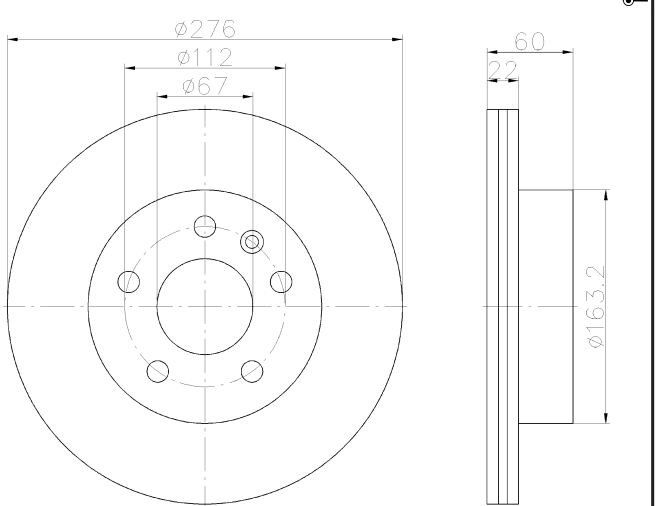

92074503

8 PRO

MERCEDES-BENZ

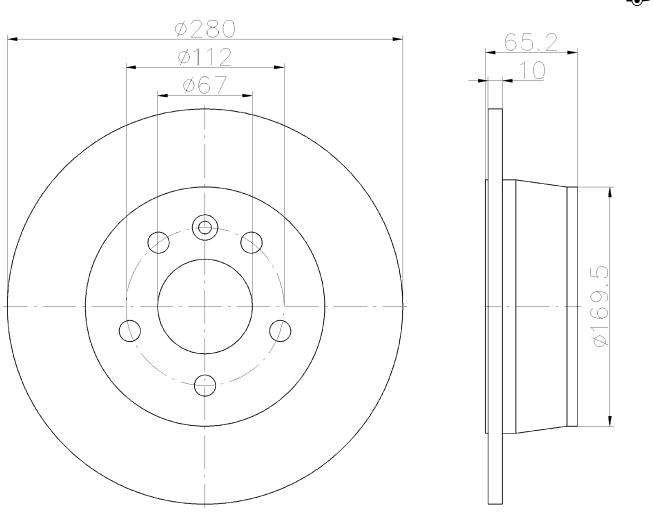

92074600

20.4

MITSUBISHI

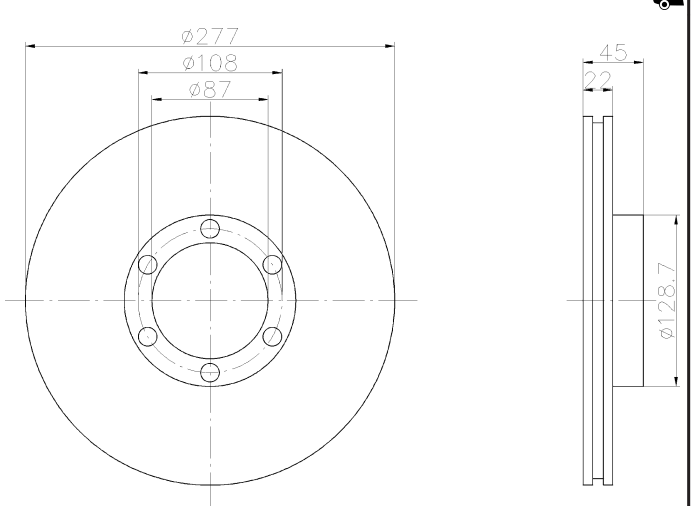

92074700

24

NISSAN

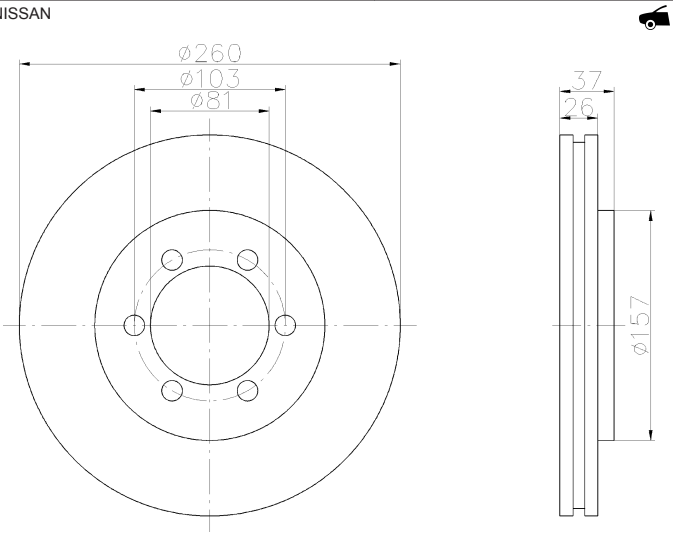

Illustrations

92074800

24

LDV, NISSAN

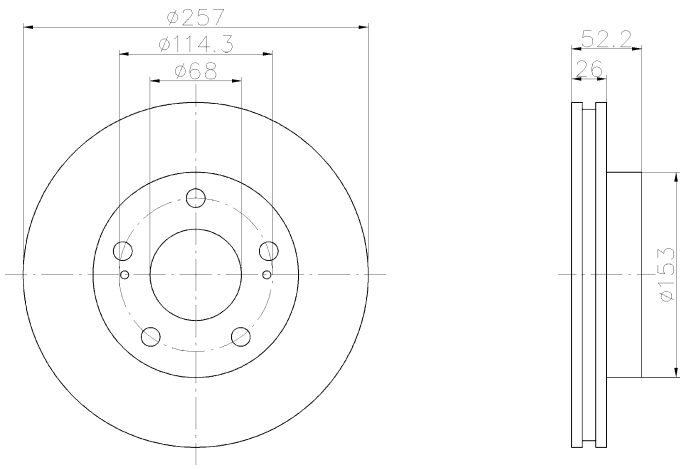

92074900

18.4

ALPINA, BMW

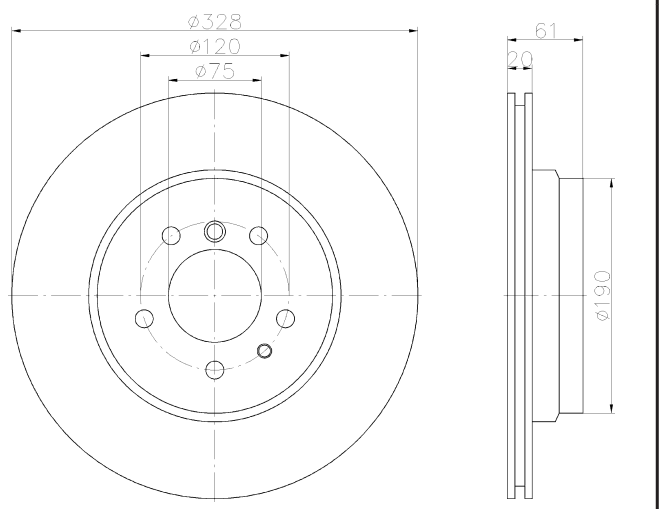

92075003

20.4 PRO

BMW

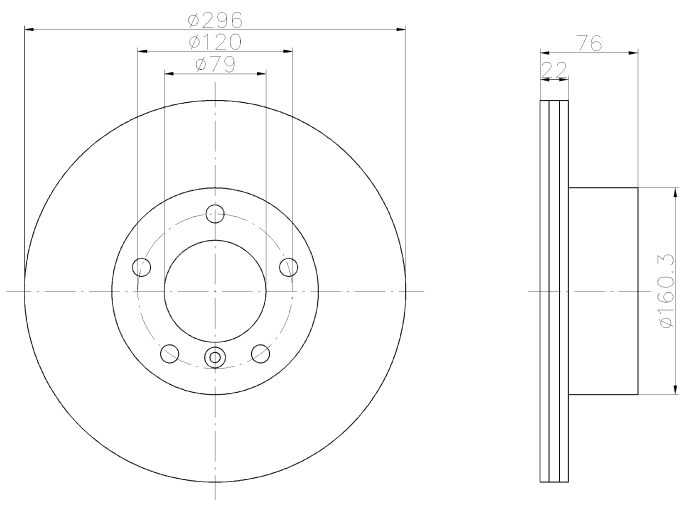

92075005

20.4 PRO

BMW

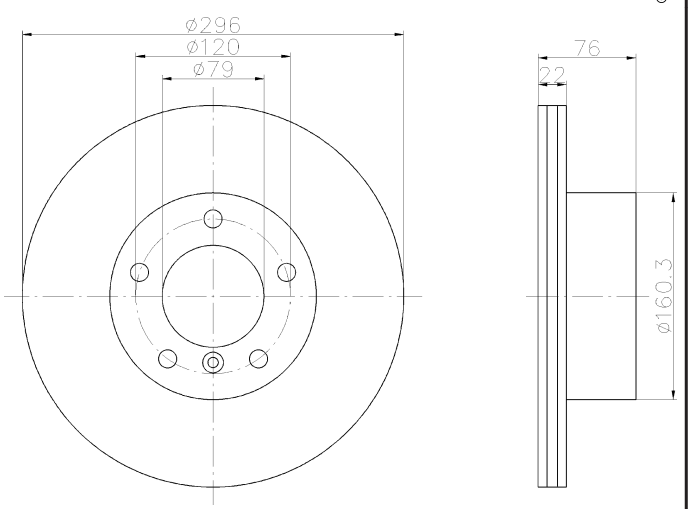

92075103

18.4 PRO

ALPINA, BMW

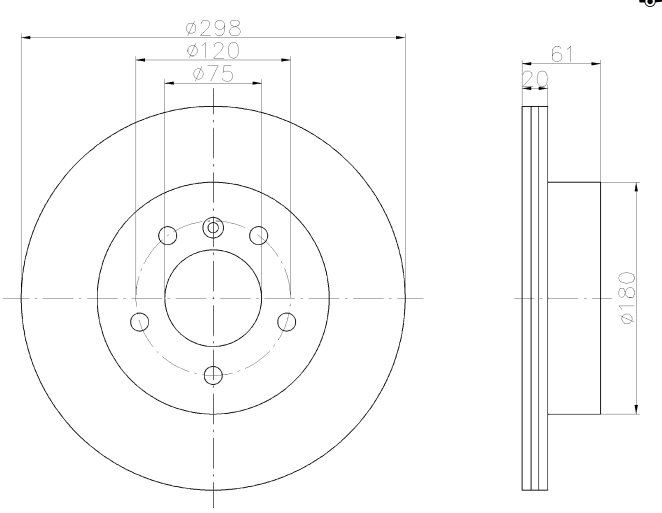

92075303

10 PRO

FORD, FORD AUSTRALIA, MAZDA

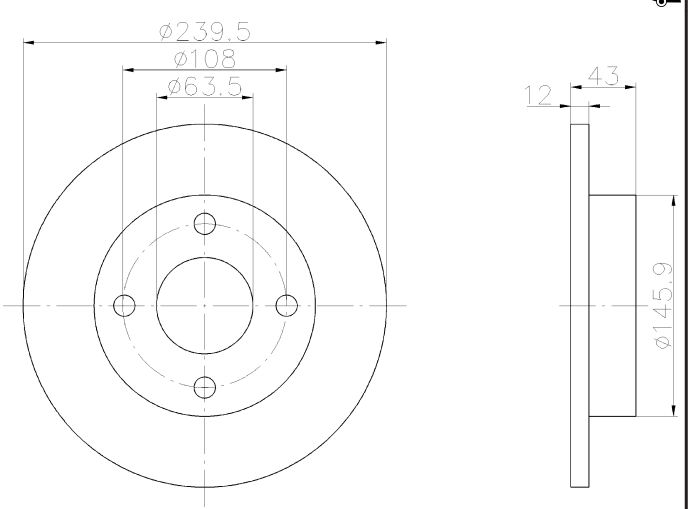

92075400

22.2

AC, FORD, FORD AUSTRALIA, FORD USA, MERCURY

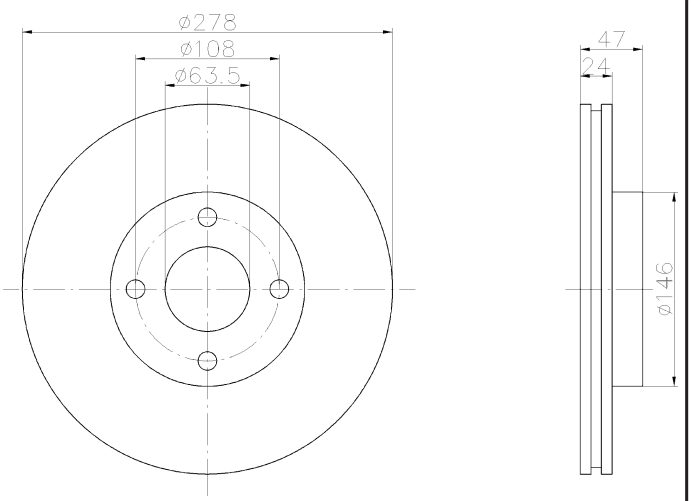

92075503

8 PRO

OPEL, VAUXHALL

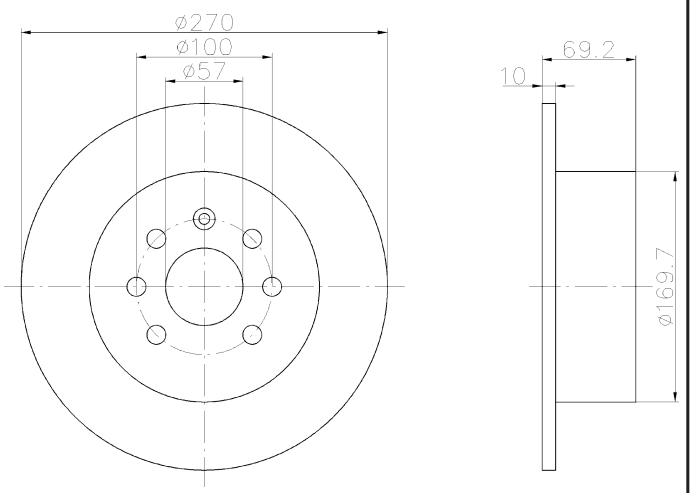

92075603

21 PRO

HOLDEN, LOTUS, OPEL, SAAB, VAUXHALL

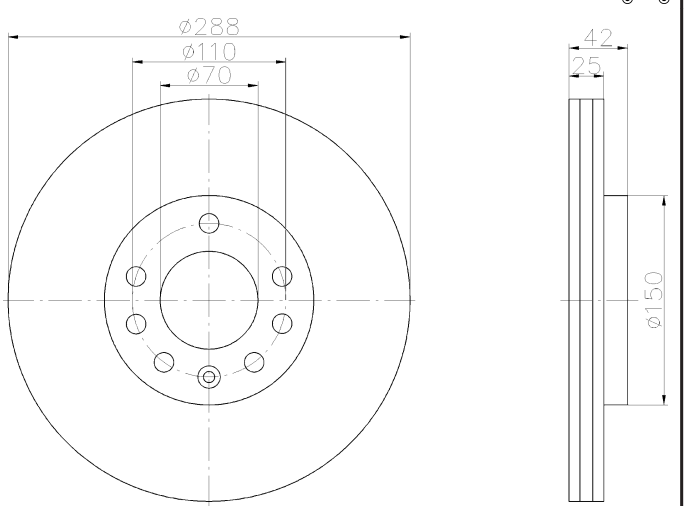

92075703

8 PRO

HOLDEN, OPEL, SAAB, VAUXHALL

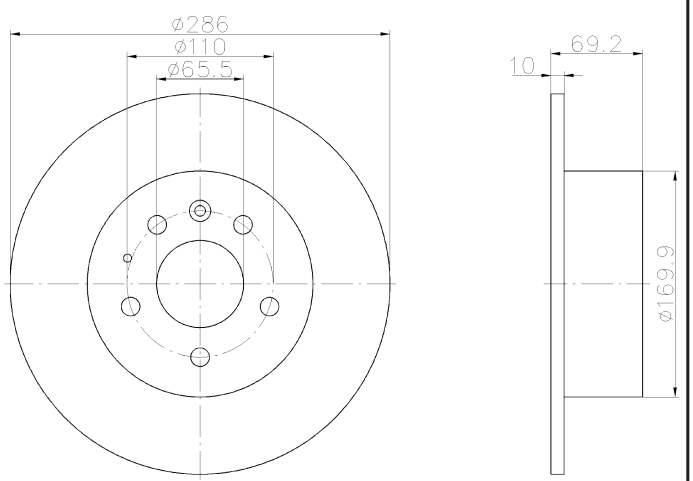

92075800

20.6

HOLDEN, ISUZU, OPEL, VAUXHALL

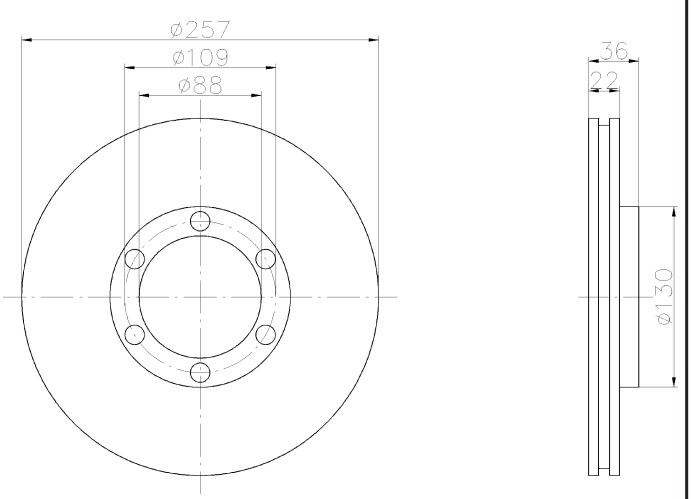

92076300

18

TOYOTA

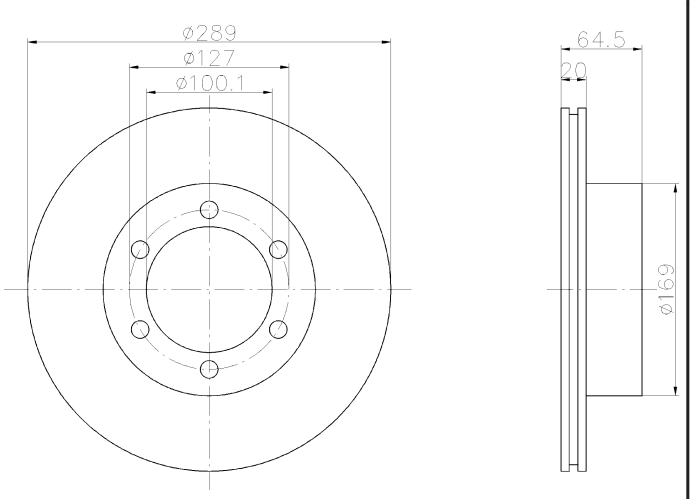

92076400

15

SUZUKI

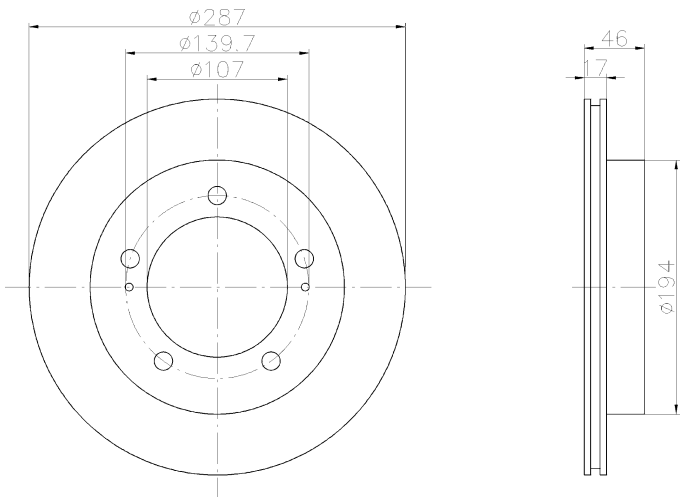

92076500

17

TOYOTA

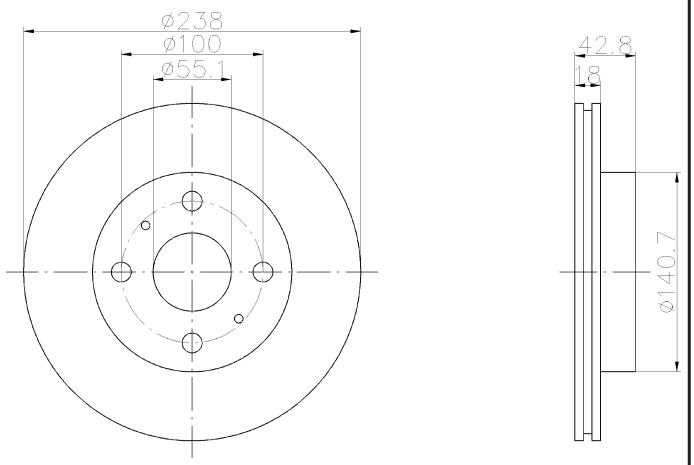

92076603

8.4 PRO

BMW

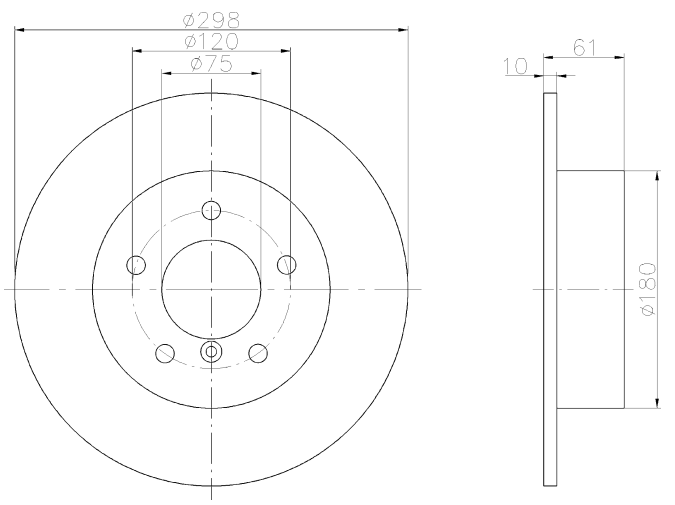

92076703

8.4 PRO

BMW

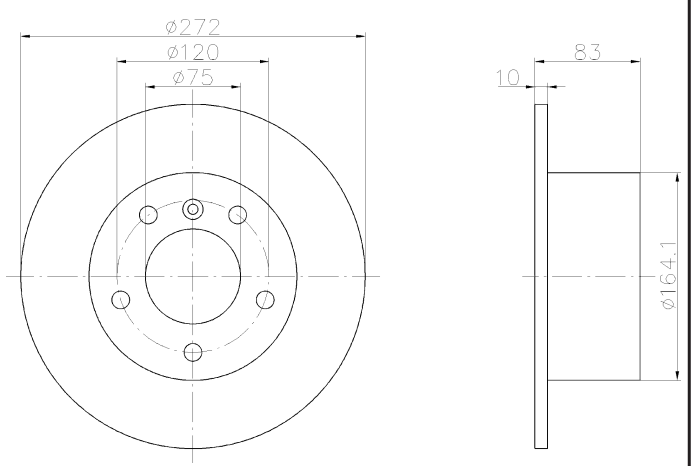

92076800

10.8

CITROËN

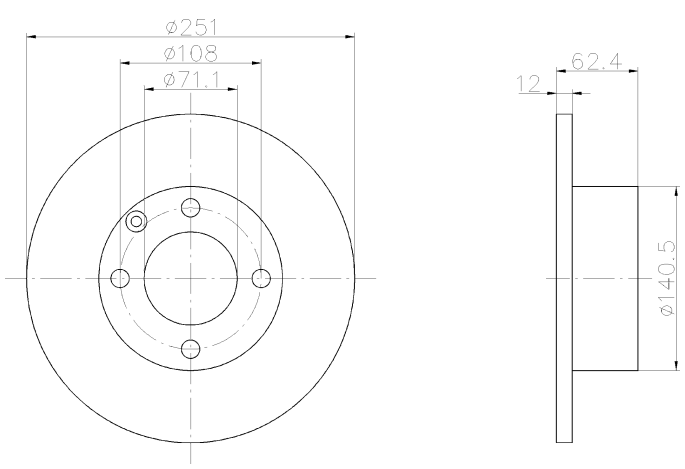

92076900

17

DAIHATSU

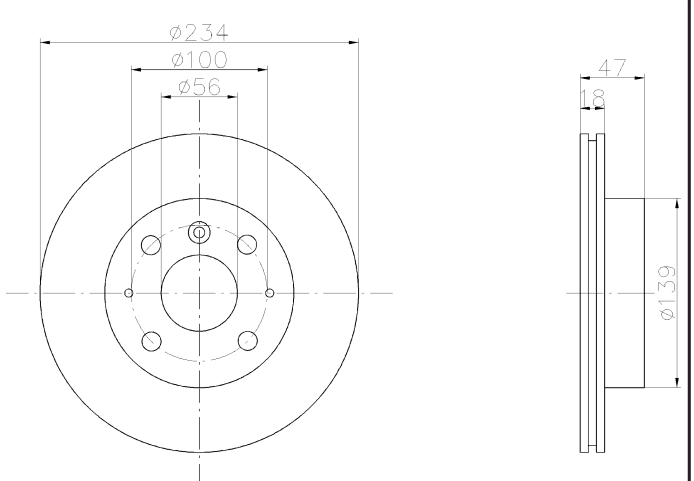

92077203

20 PRO

TOYOTA

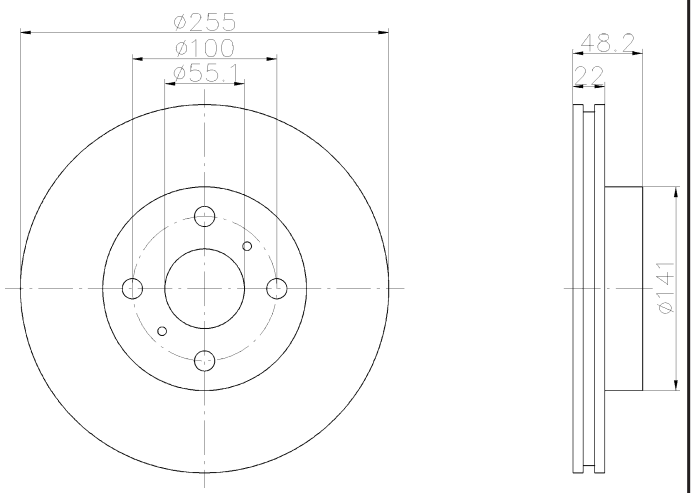

92077400

24

TOYOTA

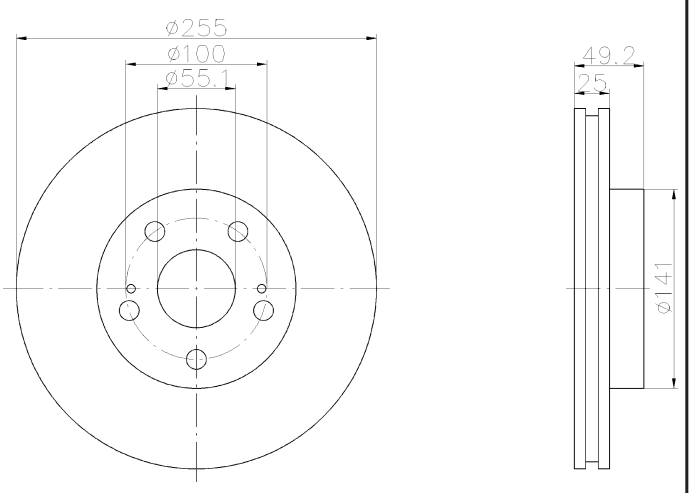

92077600

26

TOYOTA

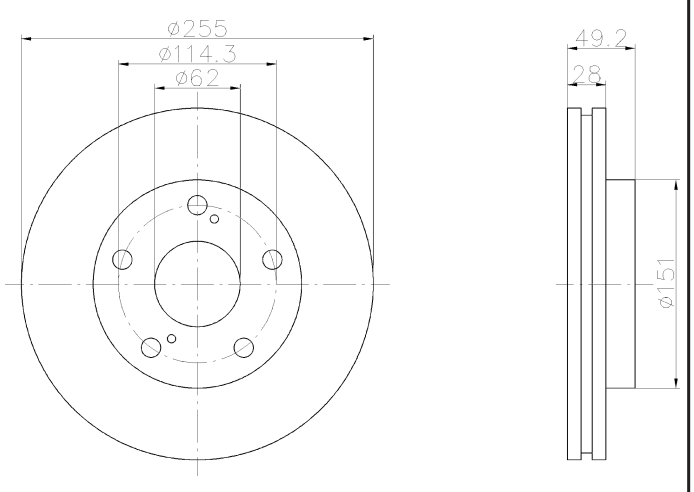

92077703

26 PRO

LEXUS, TOYOTA

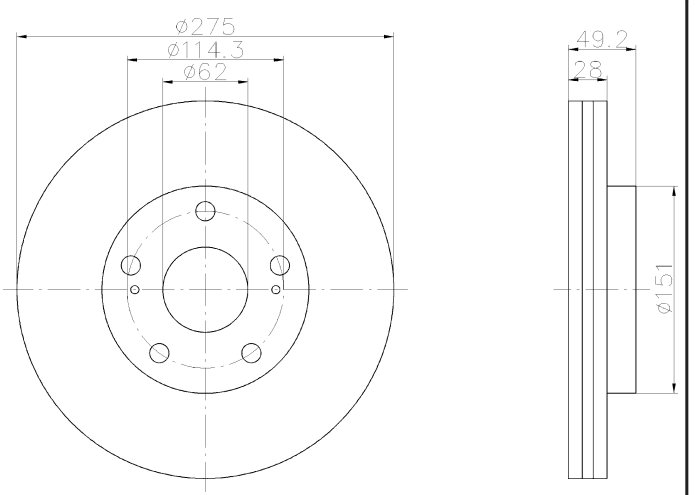

92077800

19

HONDA

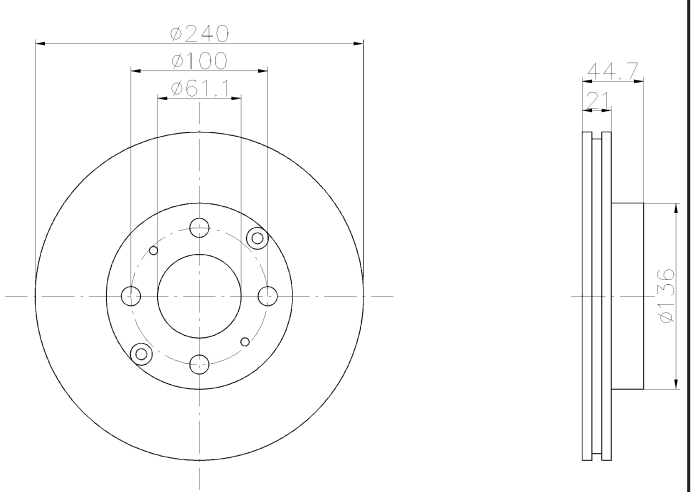

92077900

8

HONDA

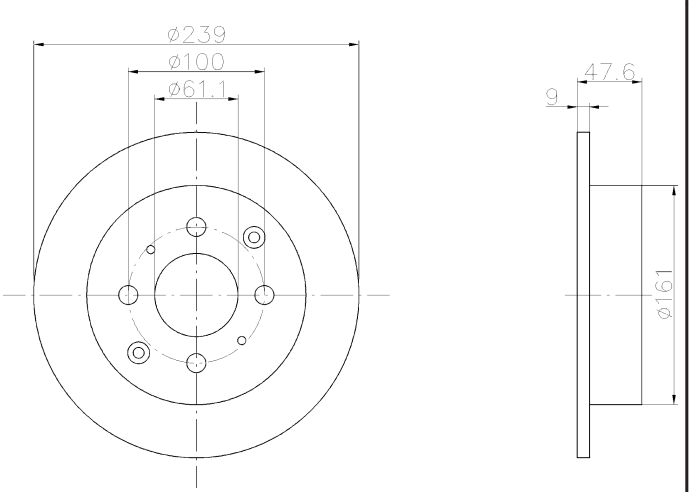

92078200

21

HONDA

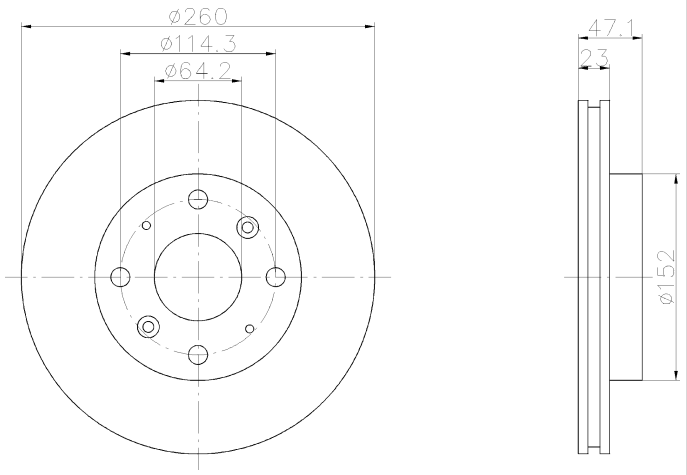

92078300

21

HONDA

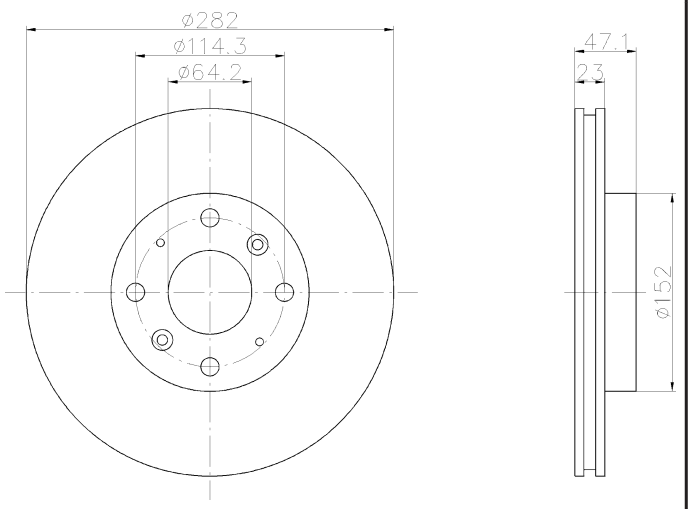

92078400

7.5

HONDA

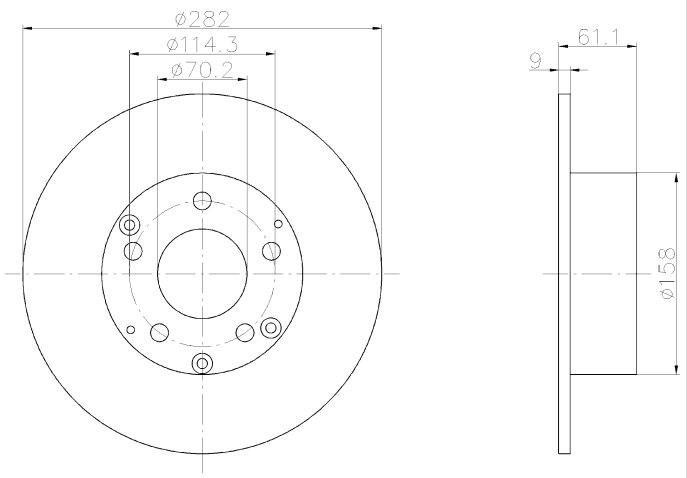

92078500

18

KIA

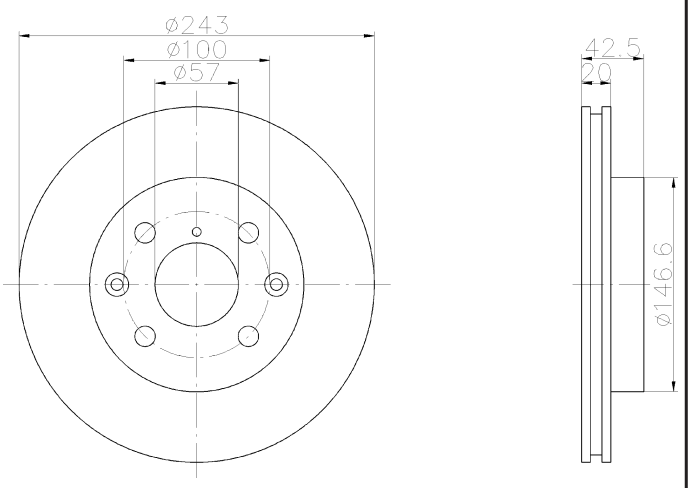

92078603

22 PRO

PEUGEOT

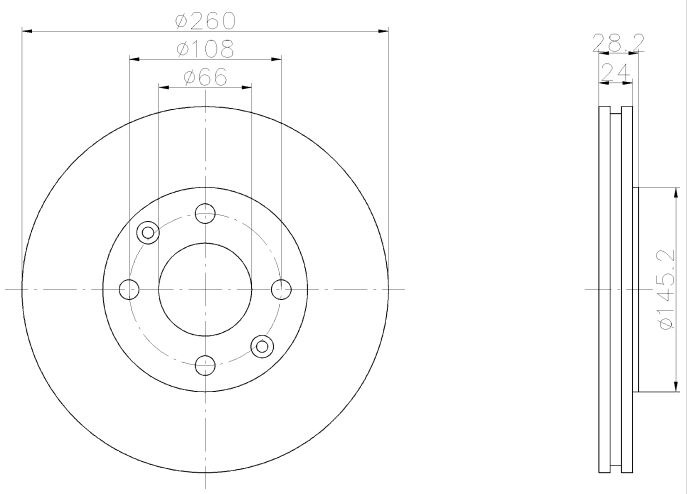

92078703

24.2 PRO

CITROËN, PEUGEOT

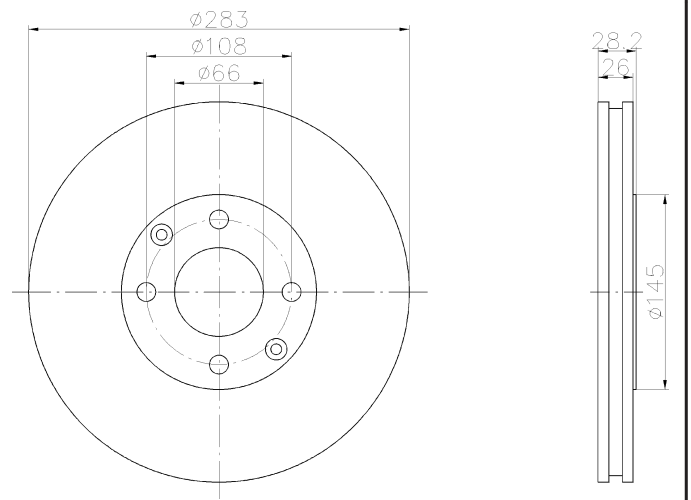

92079200

26

EUNOS, MAZDA

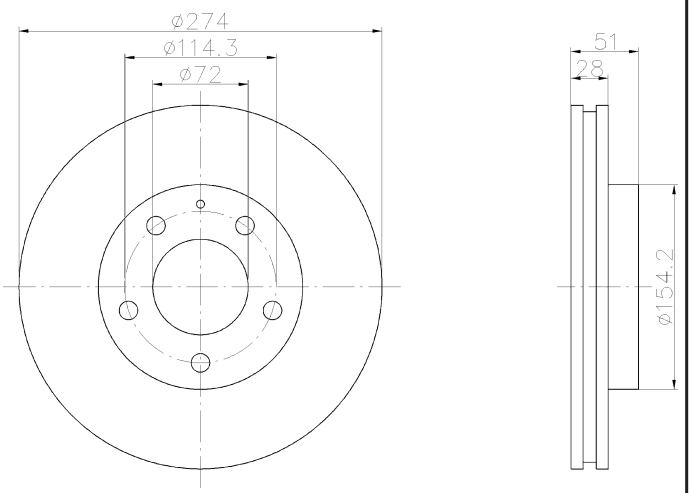

92079300

9

LEXUS, TOYOTA

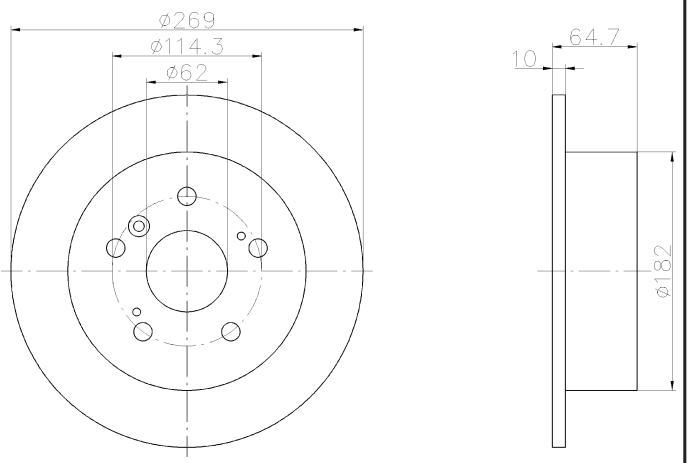

92079500

20

MAZDA

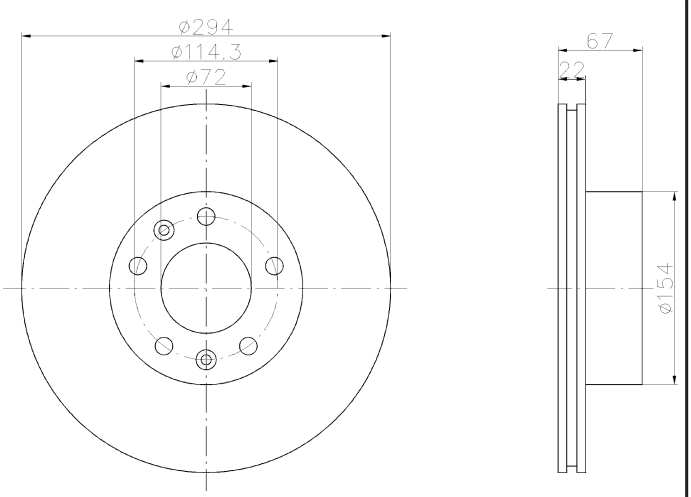

92079600

18

KIA

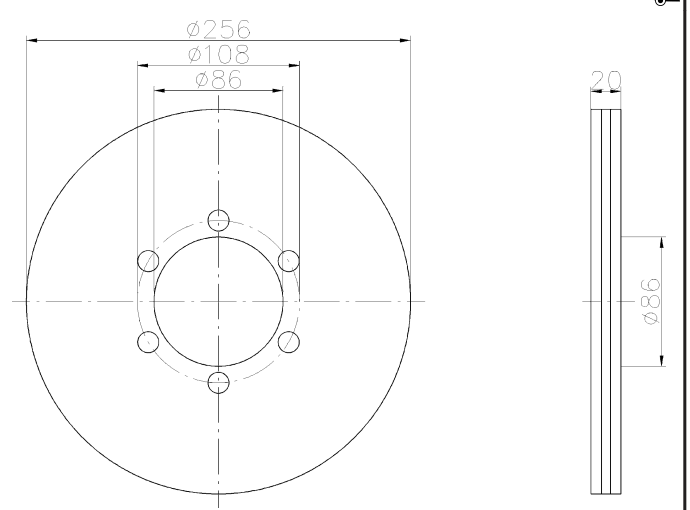

92079800

22.4

MITSUBISHI

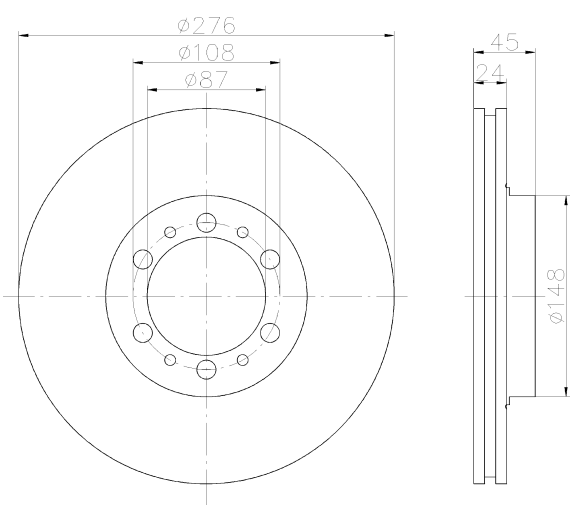

92079803

22.4

PRO

CHANGFENG, MITSUBISHI

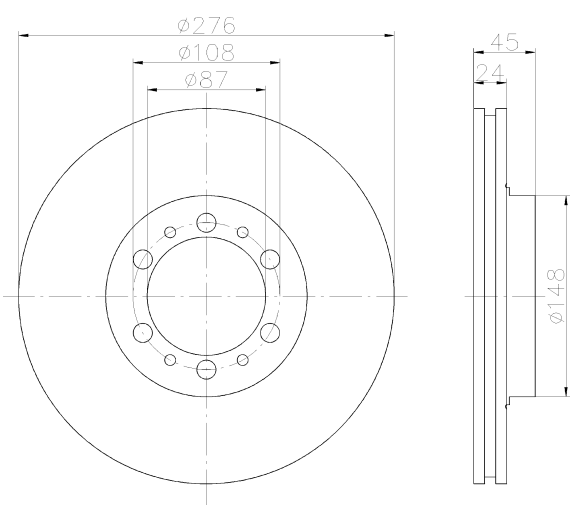

92079900

8

NISSAN

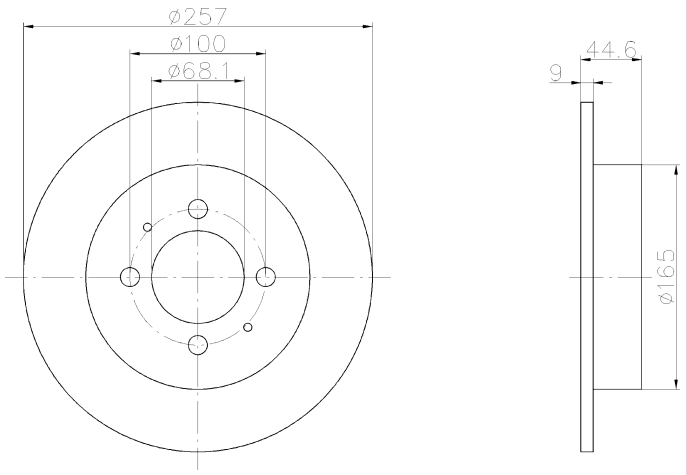

92080000

6

NISSAN

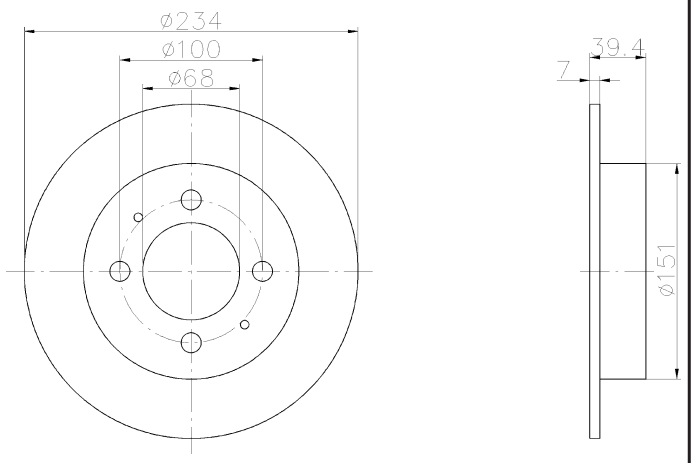

92080300

23

TOYOTA

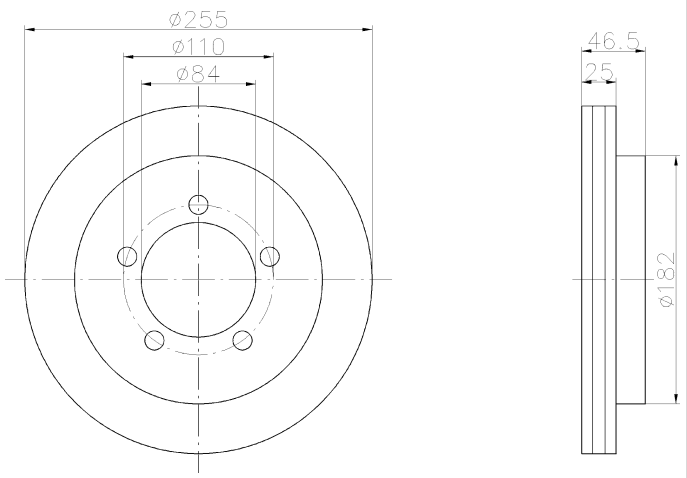

92080400

19

TOYOTA

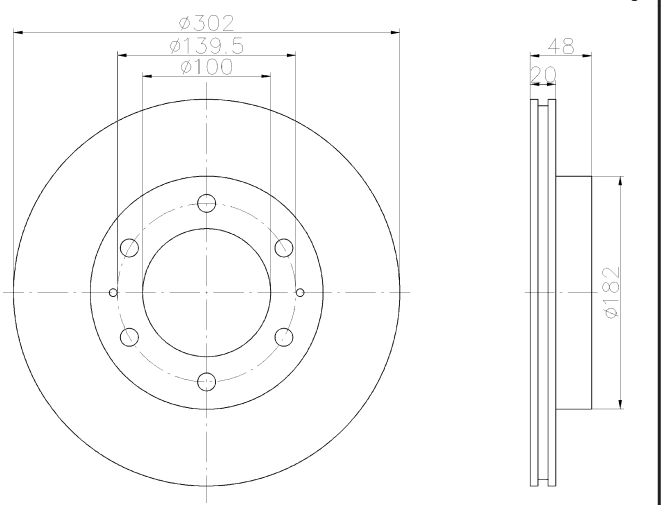

92080703

8 PRO

PEUGEOT

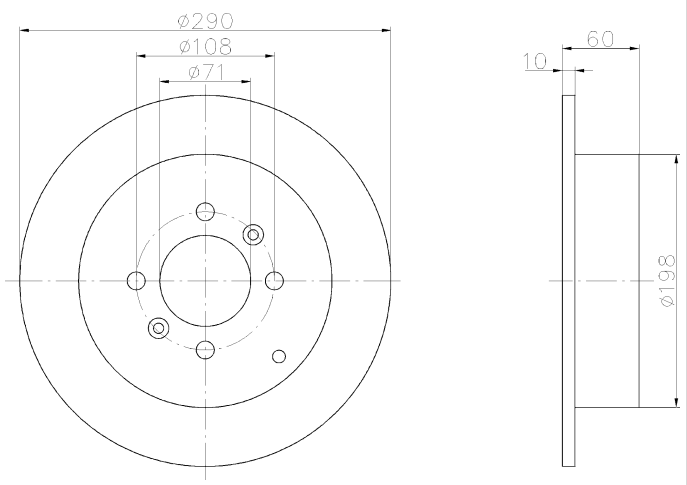

92080800

23

TOYOTA

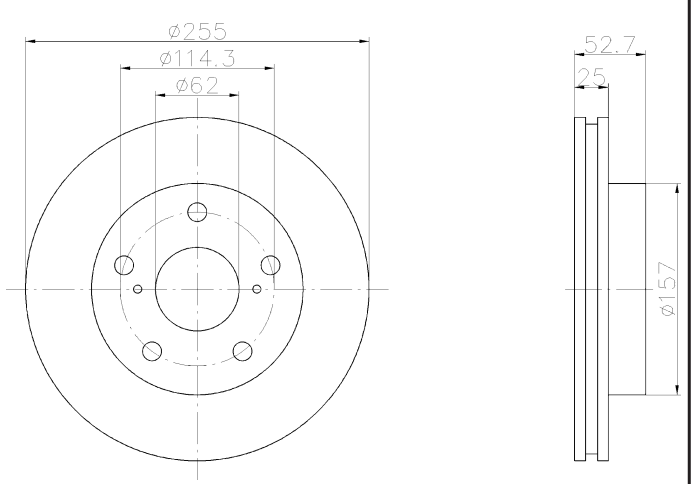

92080900

20

TOYOTA

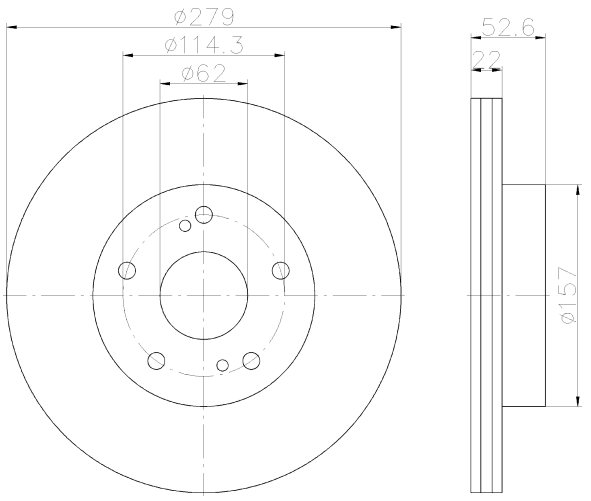

92081000

23

TOYOTA

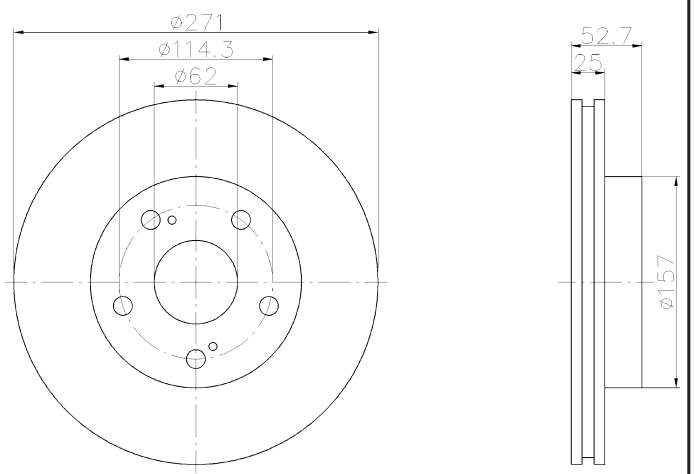

92081200

7

RENAULT

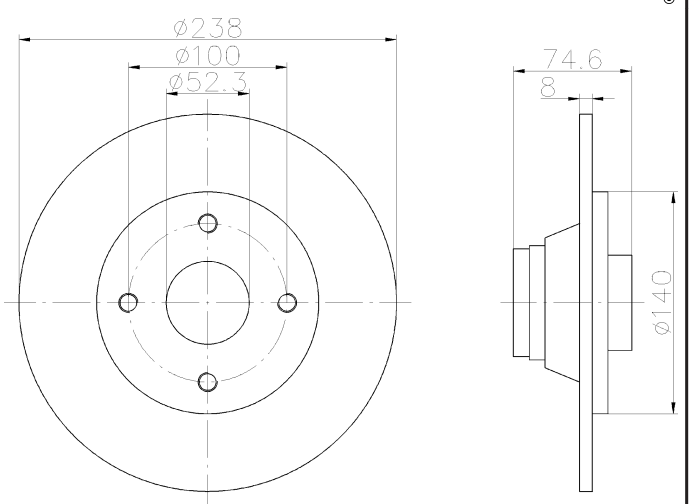

92081500

21

HONDA (GAC), ROVER

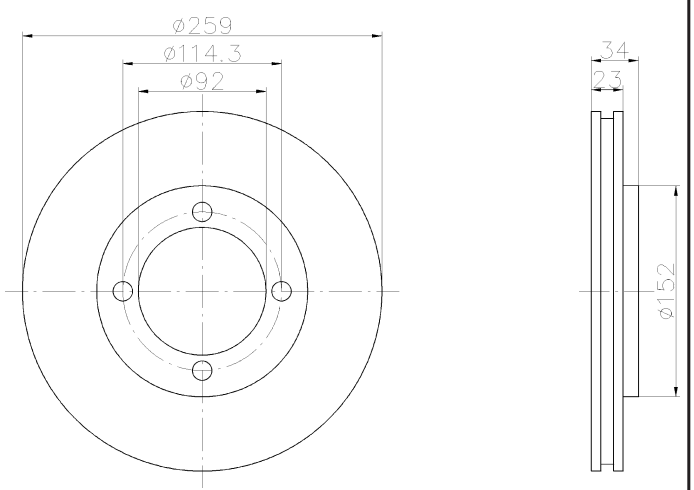

92081600

21

ROVER

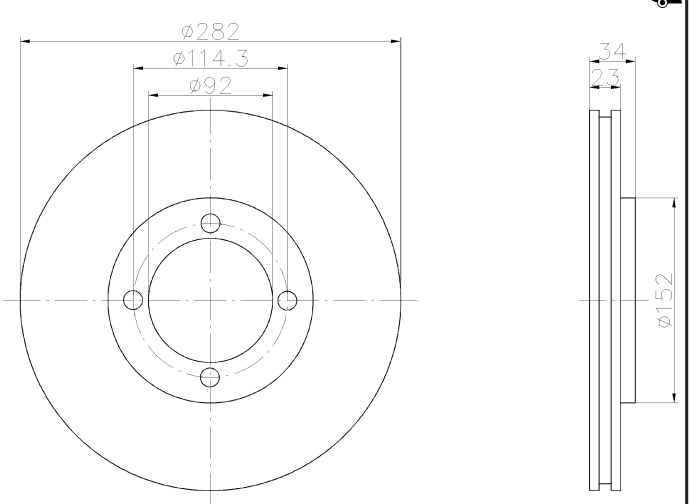

92081700

8

HONDA, HONDA (GAC), ROVER

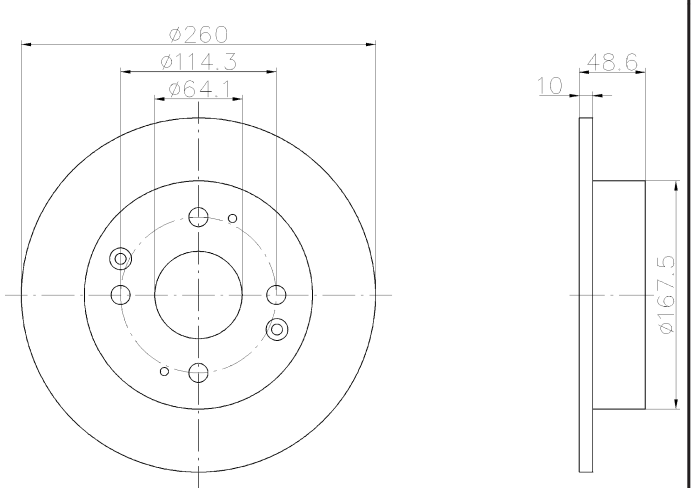

92081800

16

SUBARU

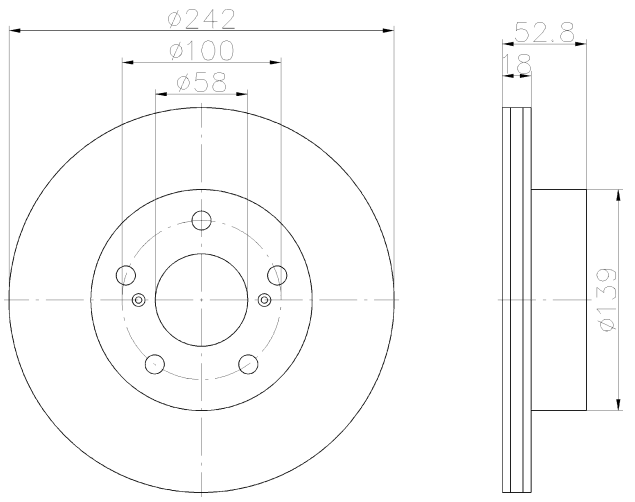

92081900

22

SUBARU

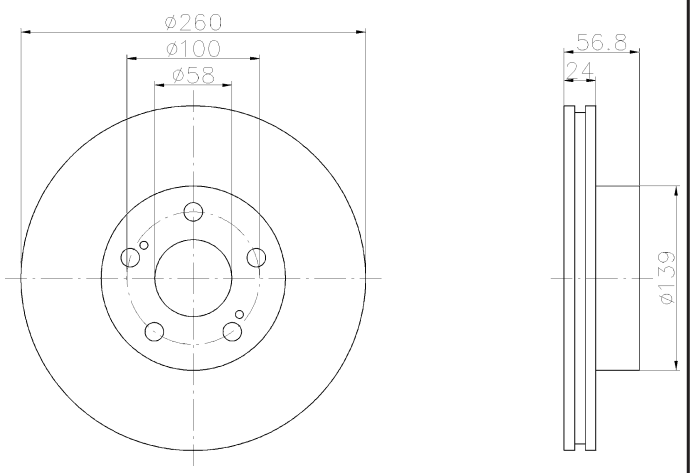

92082000

8.5

SAAB, SUBARU

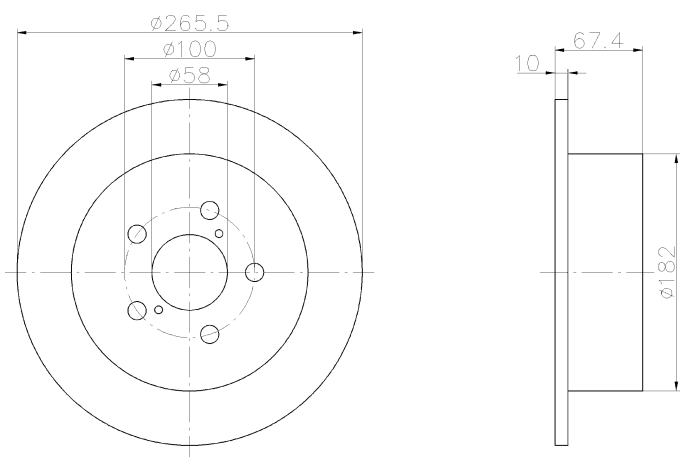

92082203

19 PRO

AUDI, SEAT, SKODA, SKODA (SVW), VOLKSWAGEN, VOLKSWAGEN (FAW), VOLKSWAGEN (SVW), ZHONGHUA(BRILLIANCE)

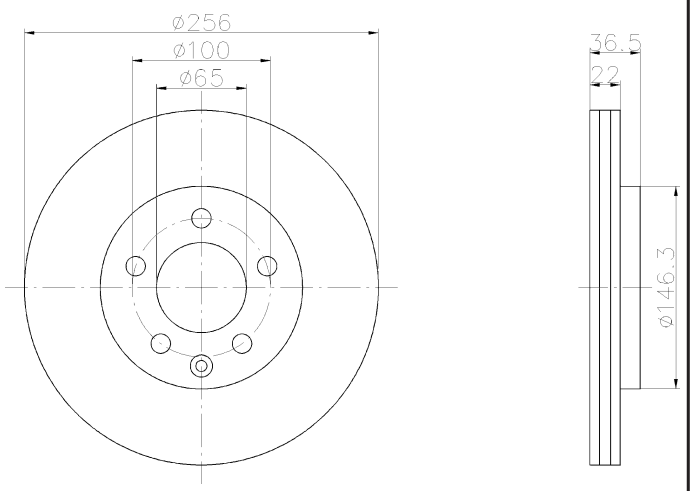

92082303

19 PRO

AUDI, SEAT, SKODA, VOLKSWAGEN, VOLKSWAGEN (FAW), VOLKSWAGEN (SVW)

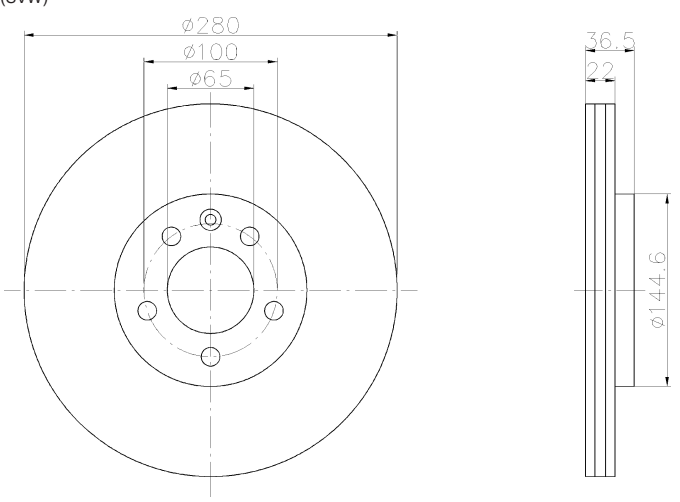

92082503

7 PRO

AUDI, SEAT, SKODA, SKODA (SVW), VOLKSWAGEN, VOLKSWAGEN (FAW), VOLKSWAGEN (SVW), ZHONGHUA(BRILLIANCE)

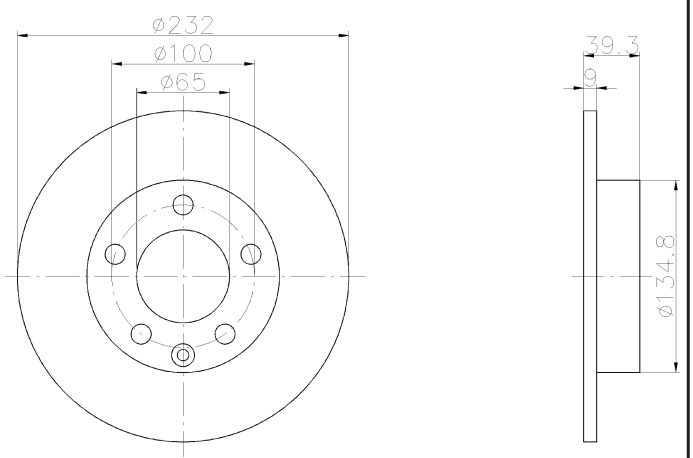

92082600

17

TOYOTA

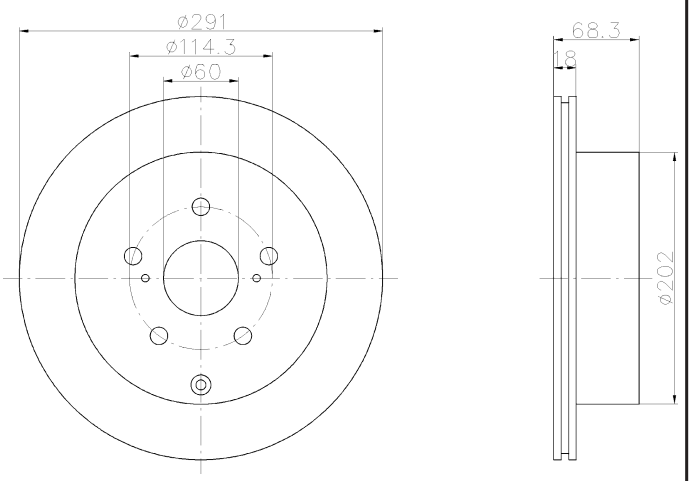

92083003

8.4 PRO

MITSUBISHI, PROTON, VOLVO

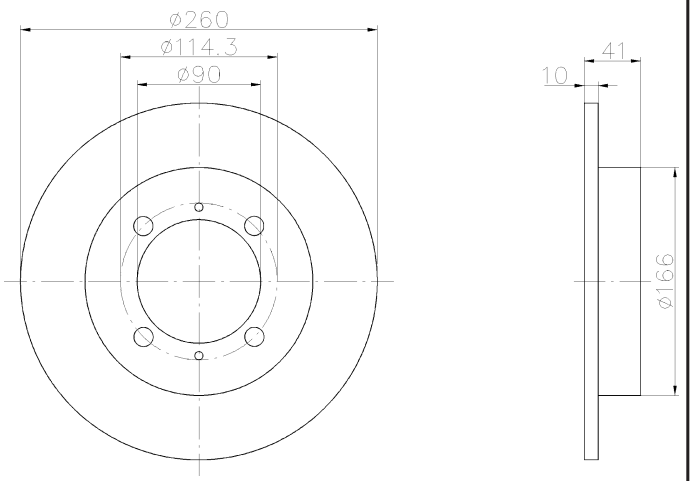

92083100

18.2

ALFA ROMEO

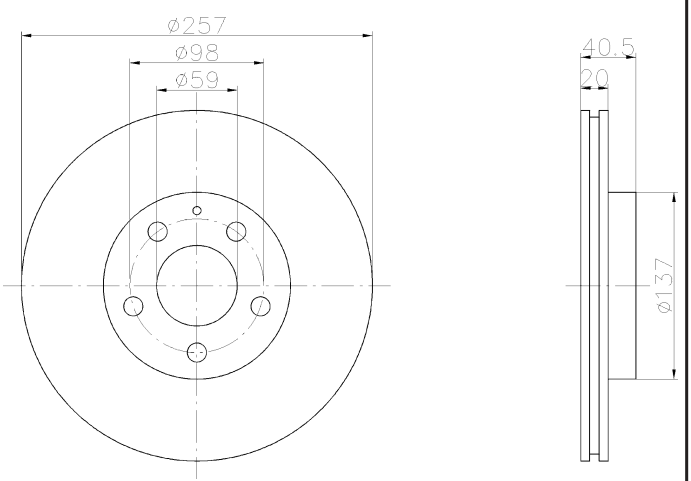

92083203

20.2 PRO

ALFA ROMEO

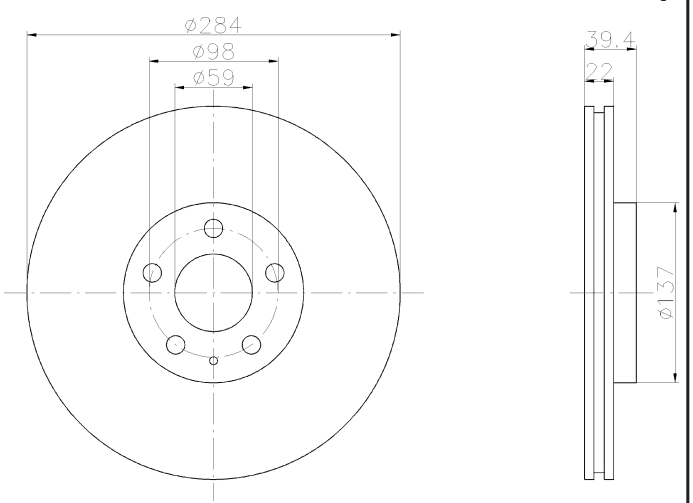

92083303

9.2 PRO

ALFA ROMEO

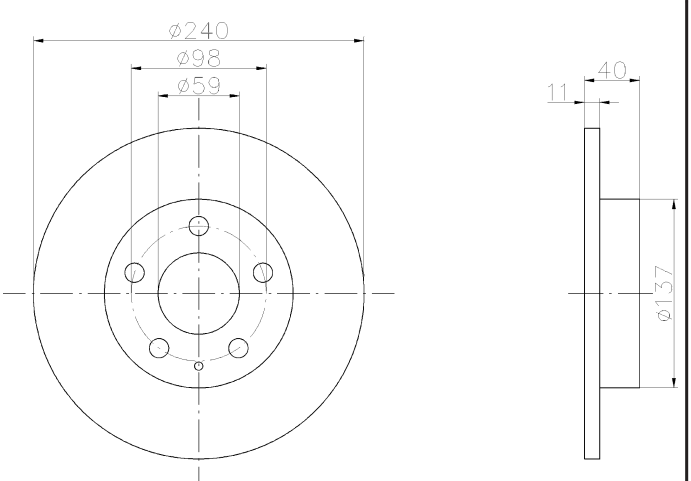

92083400

28.4

BMW

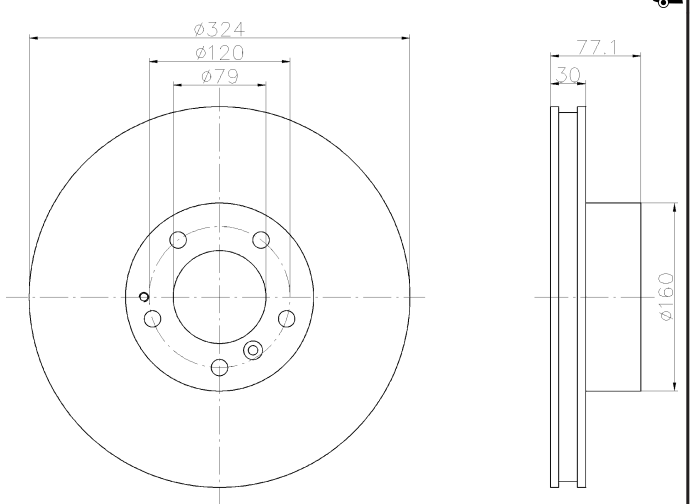

Illustrations

92083503

20 PRO

AUDI, SEAT, VOLKSWAGEN

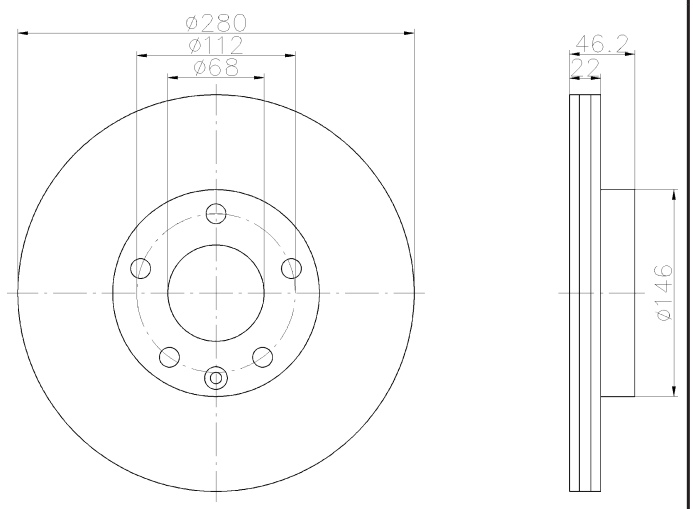

92083505

20 PRO

AUDI, SEAT, VOLKSWAGEN

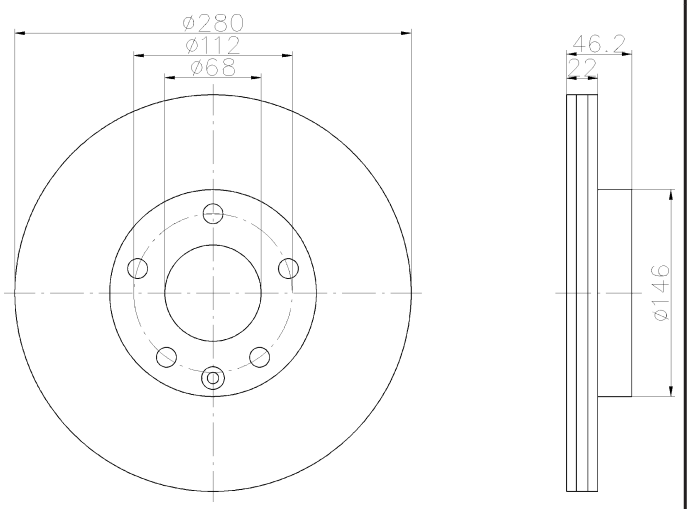

92083603

23 PRO

VOLKSWAGEN

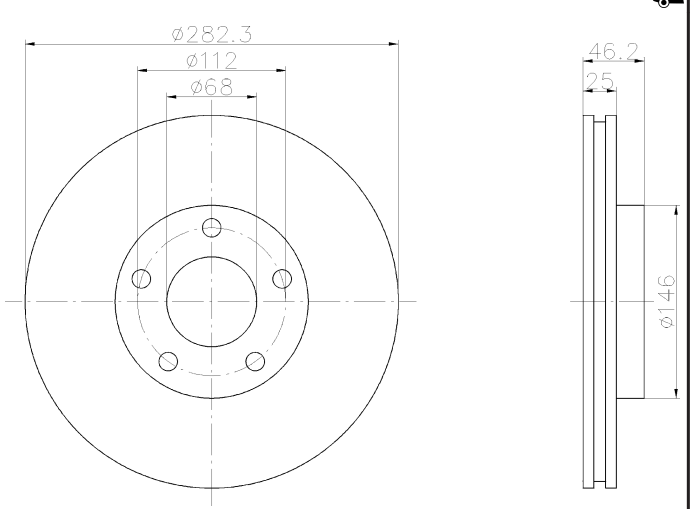

92083703

15 PRO

VOLKSWAGEN

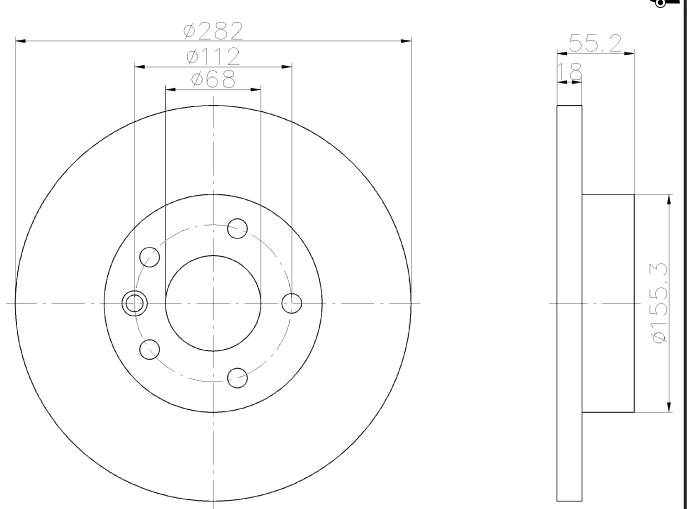

92083803

20 PRO

VOLKSWAGEN

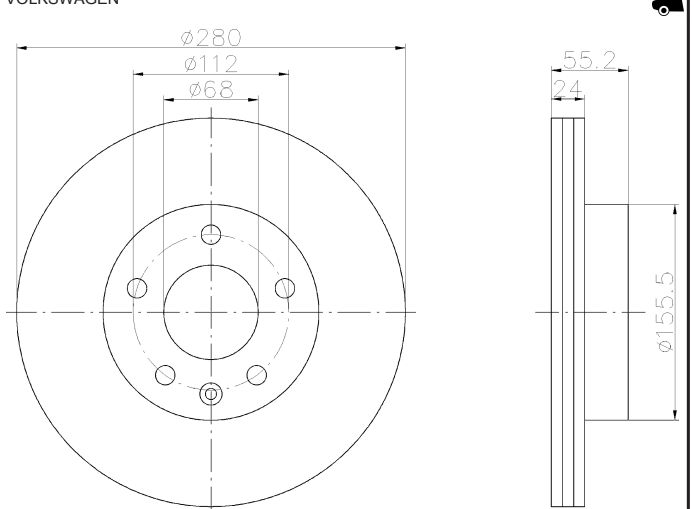

92083903

10 PRO

VOLKSWAGEN

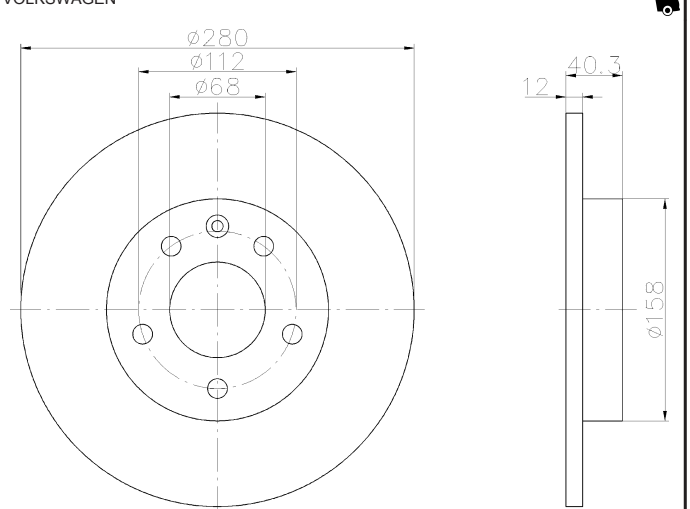

92087300

23

MERCEDES-BENZ, SSANGYONG

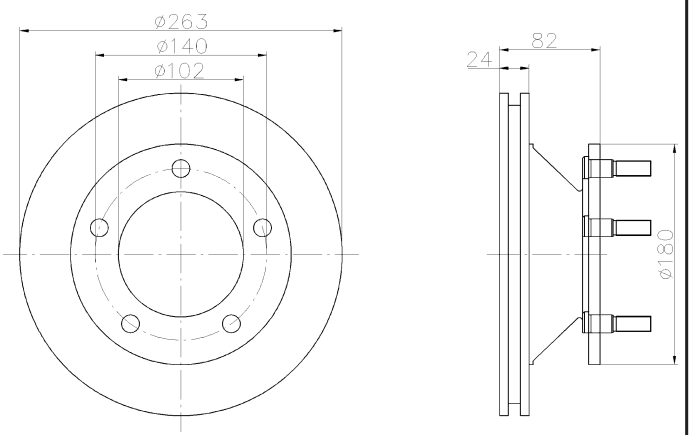

92088000

18.2

CITROËN, FIAT, PEUGEOT

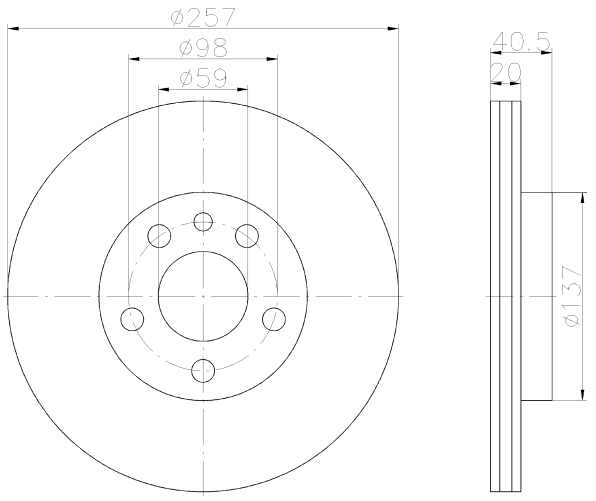

92088100

22.2

FORD, FORD AUSTRALIA

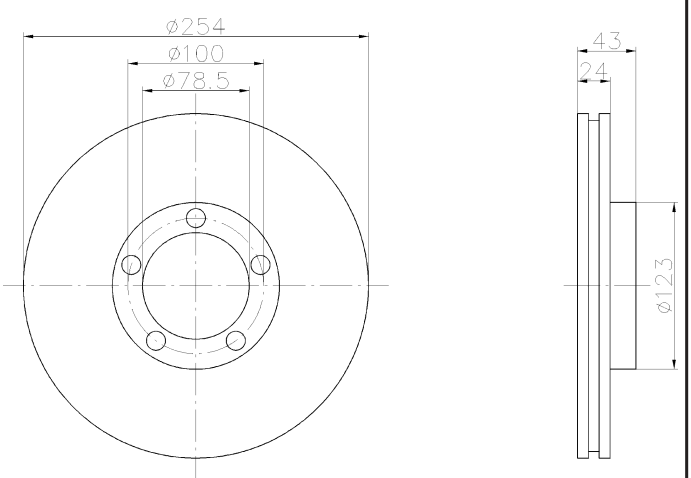

92088200

22.2

FORD, FORD AUSTRALIA

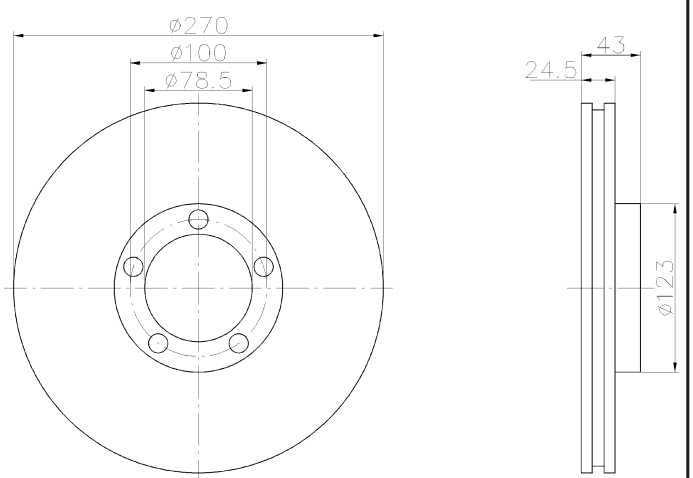

92088403

8.9 PRO

FORD, FORD AUSTRALIA

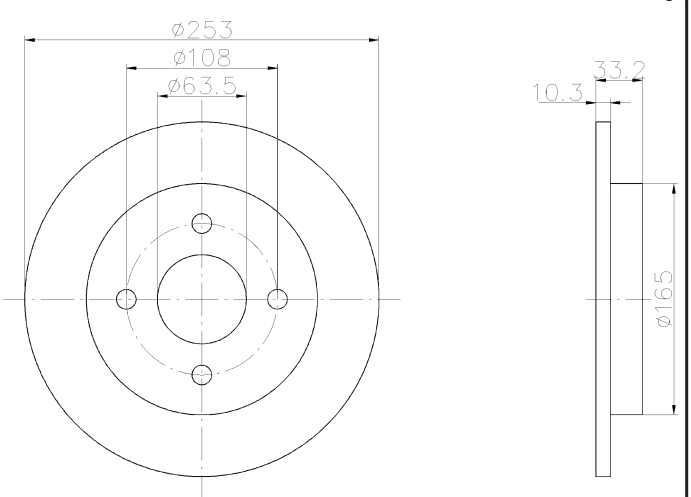

92088503

8 PRO

AUDI, VOLKSWAGEN

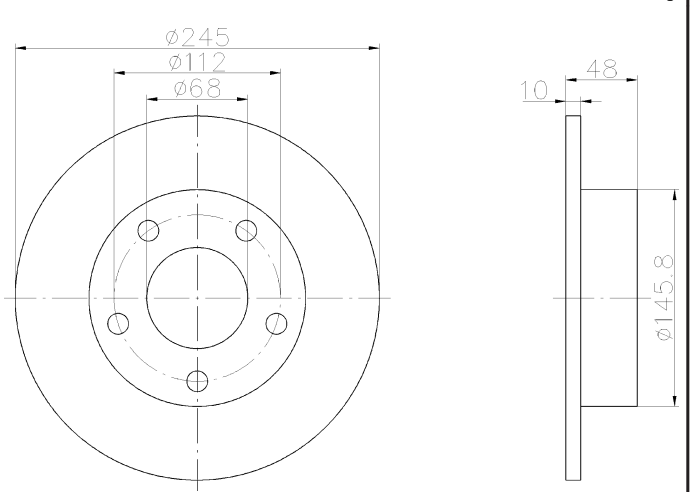

92088600

8

VOLVO

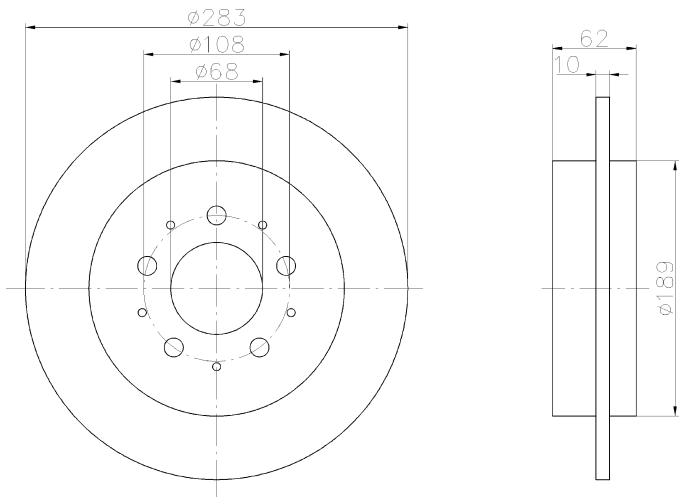

92088700

8

VOLKSWAGEN

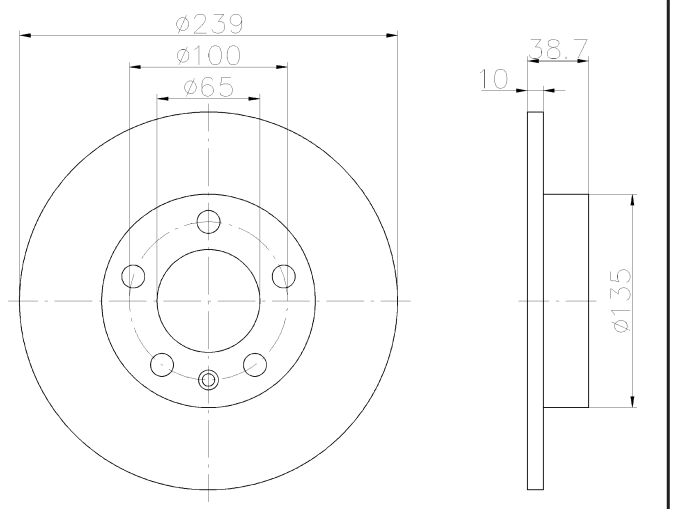

92088803

22 PRO

PORSCHE

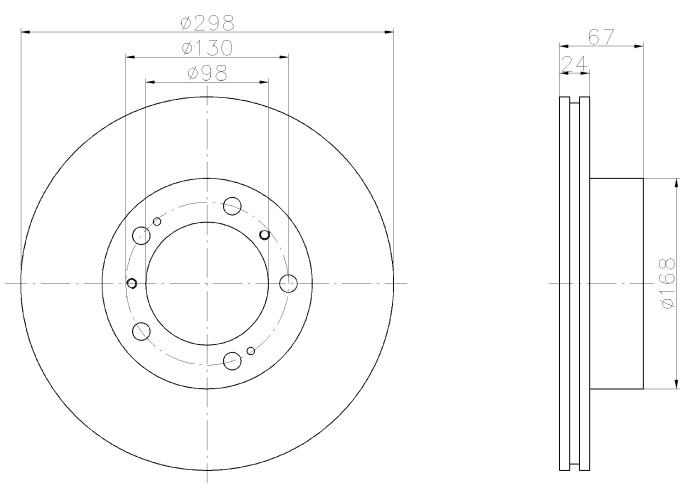

92088903

18 PRO

PORSCHE

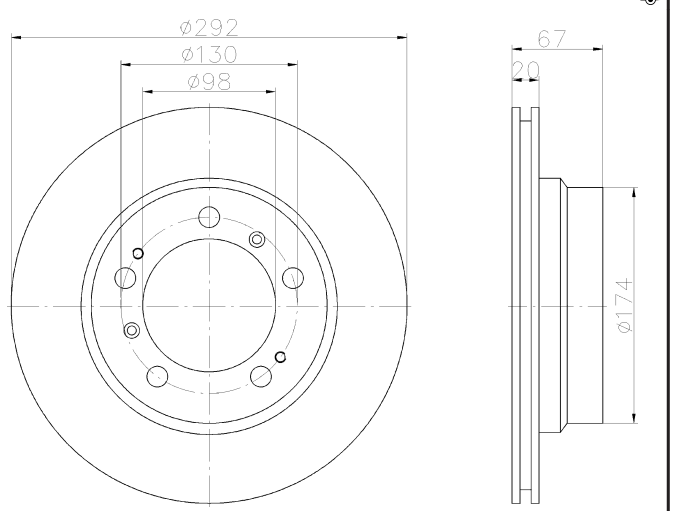

92089000

8.3

MERCEDES-BENZ

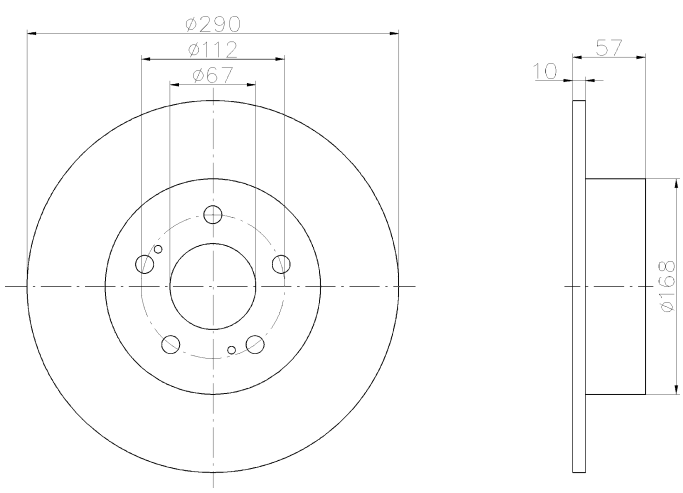

92089103

11 PRO

CITROËN, CITROËN (DF-PSA), PEUGEOT

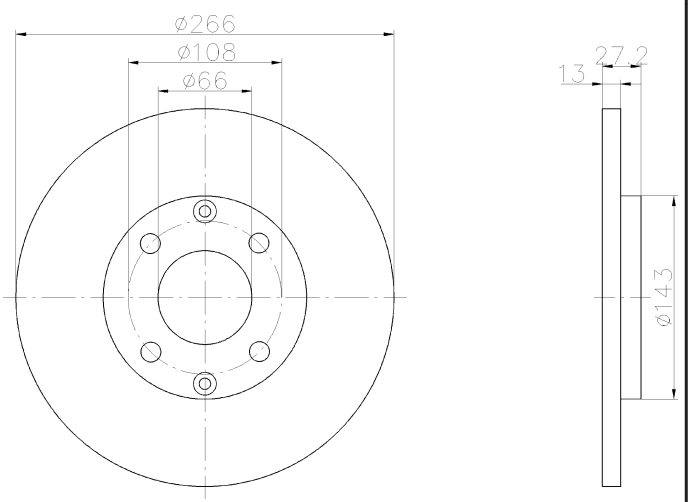

92089300

11.4

PROTON

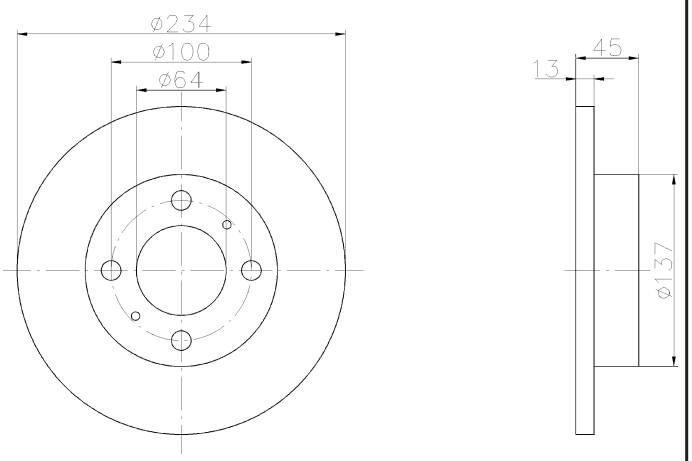

92089400

16.4

MITSUBISHI, PROTON

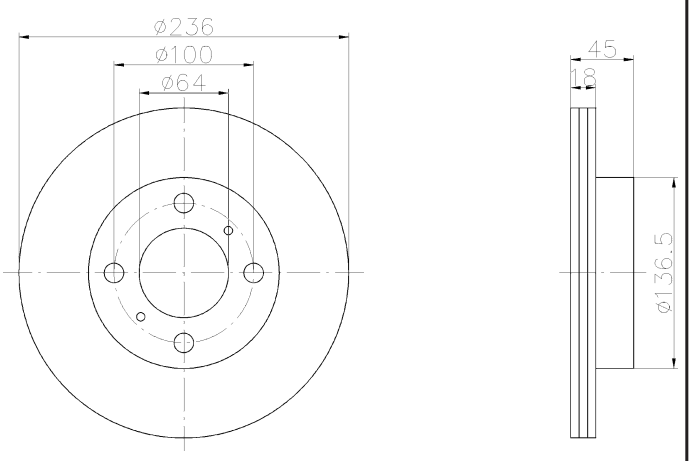

92089803

19 PRO

MERCEDES-BENZ, VOLKSWAGEN

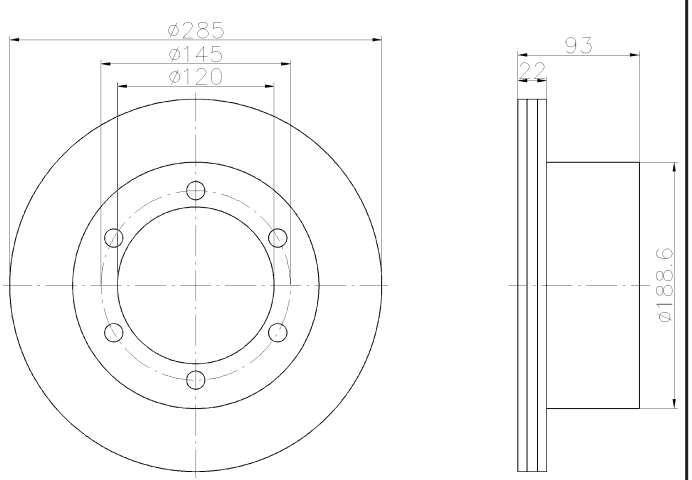

92089903

23 PRO

MERCEDES-BENZ

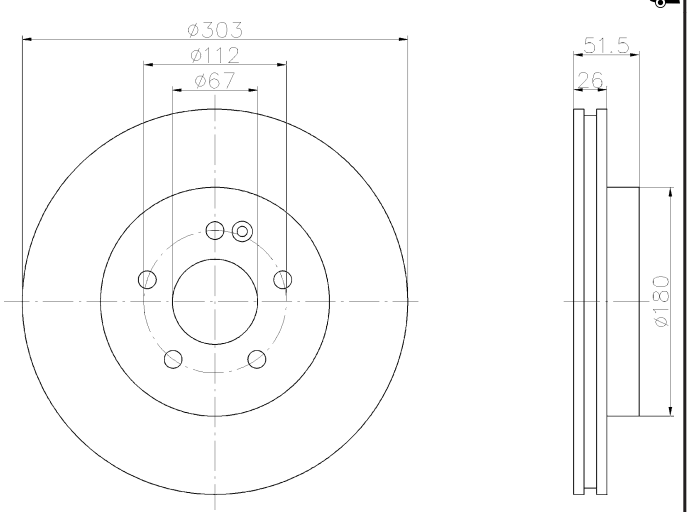

92089905

23 PRO

MERCEDES-BENZ

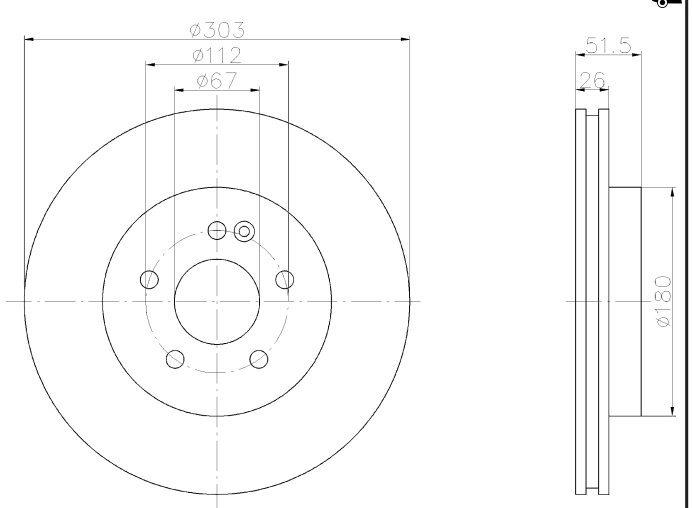

92090003

13 PRO

MERCEDES-BENZ

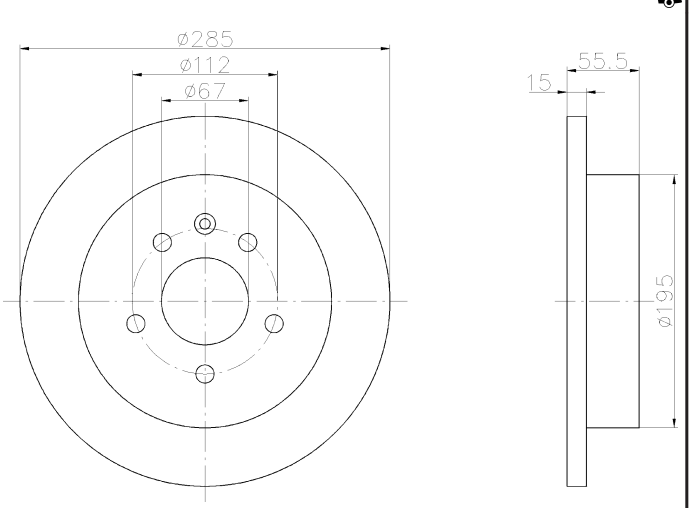

Illustrations

92090100

11

MG, ROVER

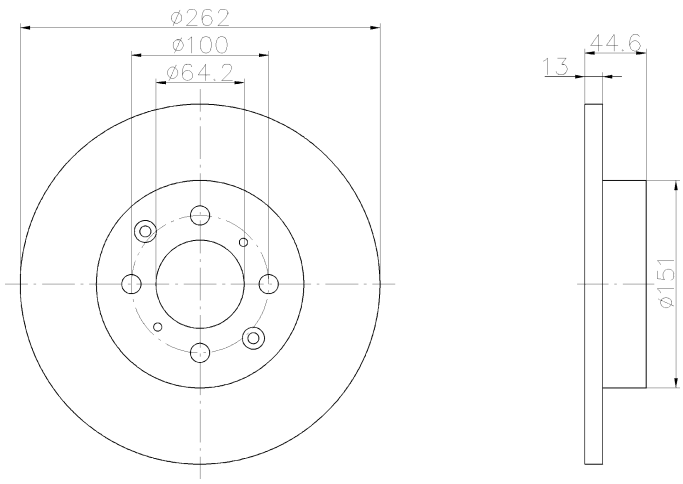

92090200

11.4

SKODA, VOLKSWAGEN

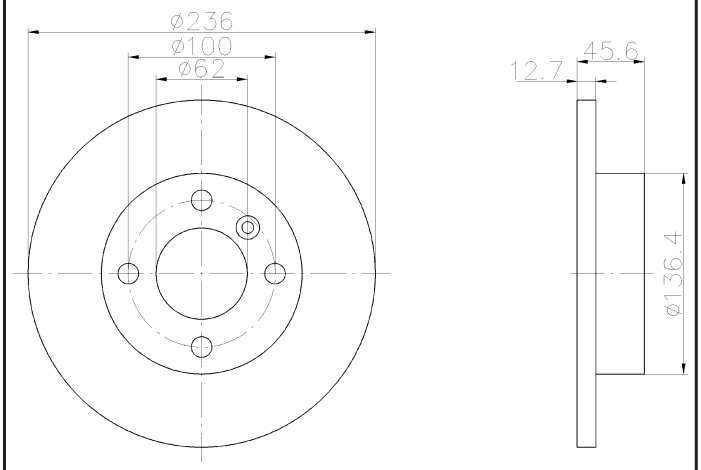

92090300

18.2

FIAT

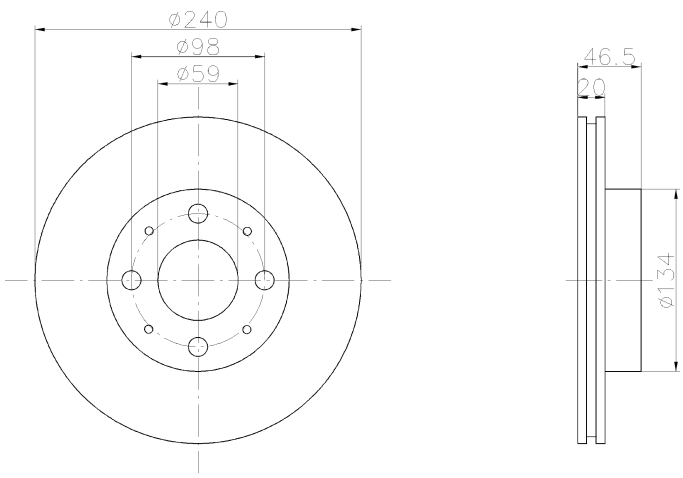

92090800

8

AUDI

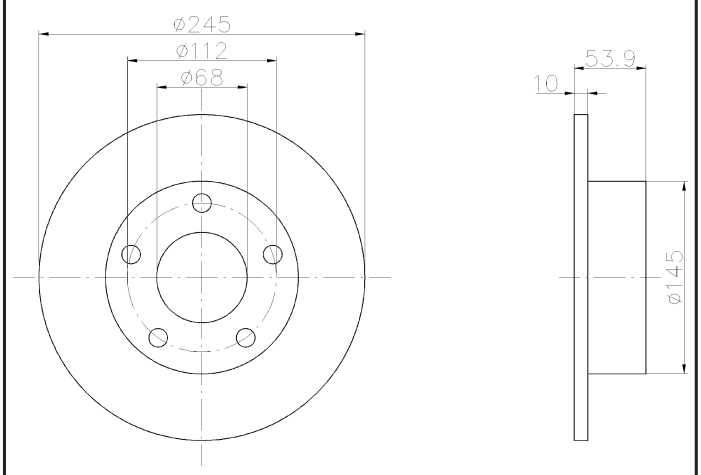

92090803

8 PRO

AUDI

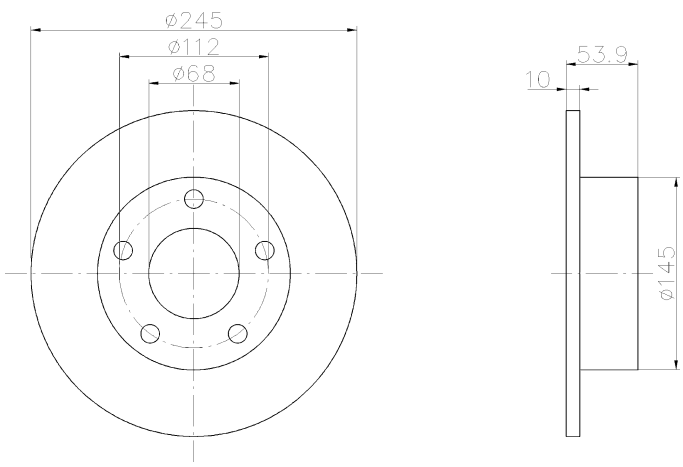

92090900

16

NISSAN

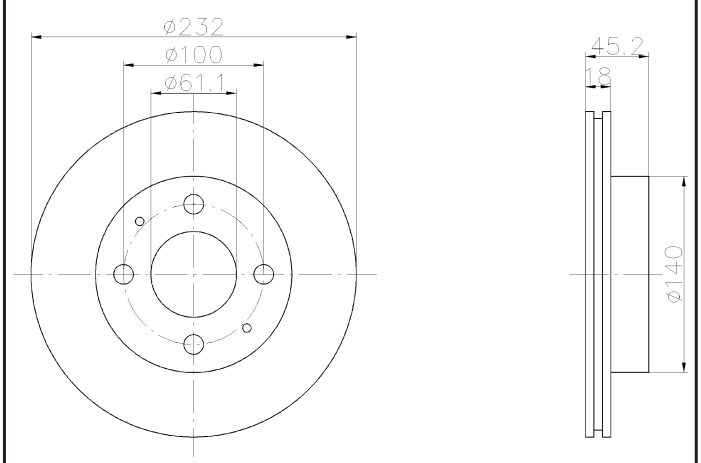

92091000

16

NISSAN

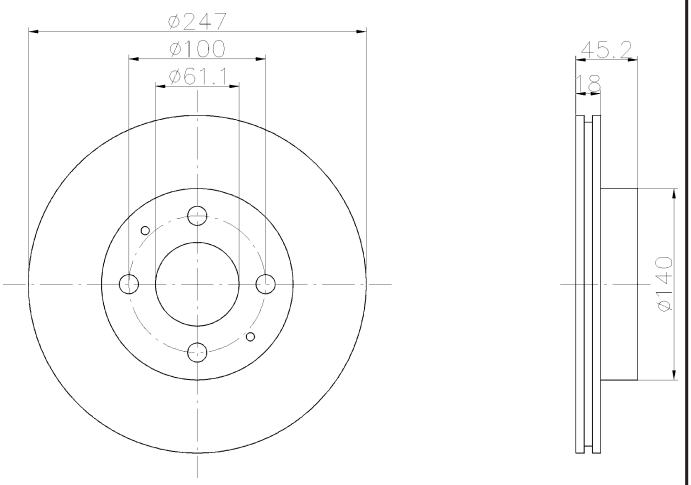

92091103

PRO

10.3

MERCEDES-BENZ

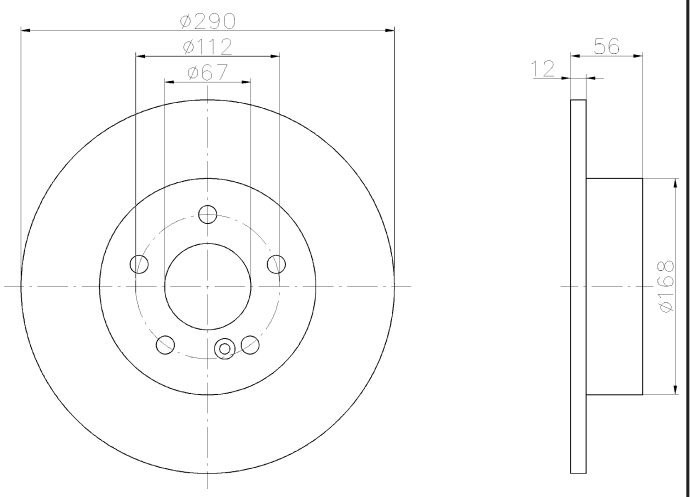

92091203

PRO

10

MERCEDES-BENZ

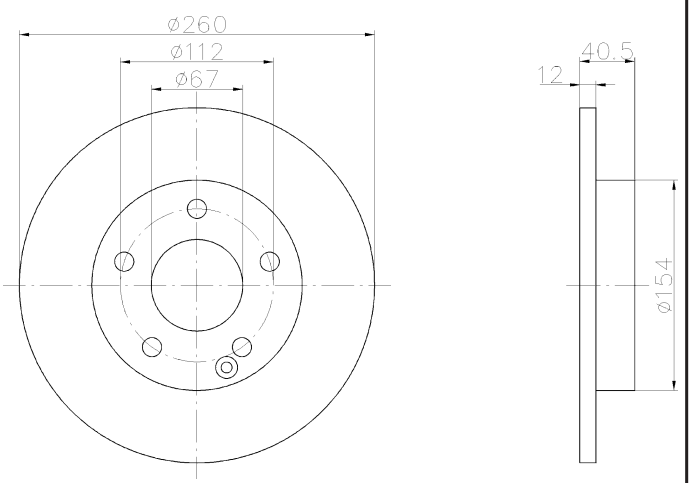

92091303

PRO

19.4

MERCEDES-BENZ

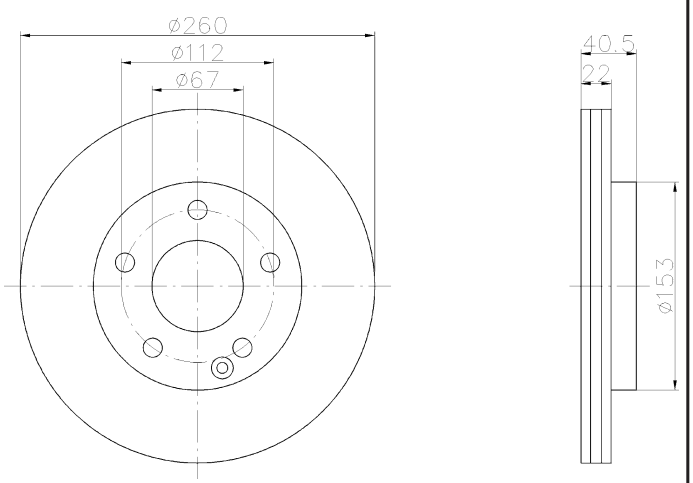

92091400

24.6

ACURA, HOLDEN, ISUZU, OPEL, VAUXHALL

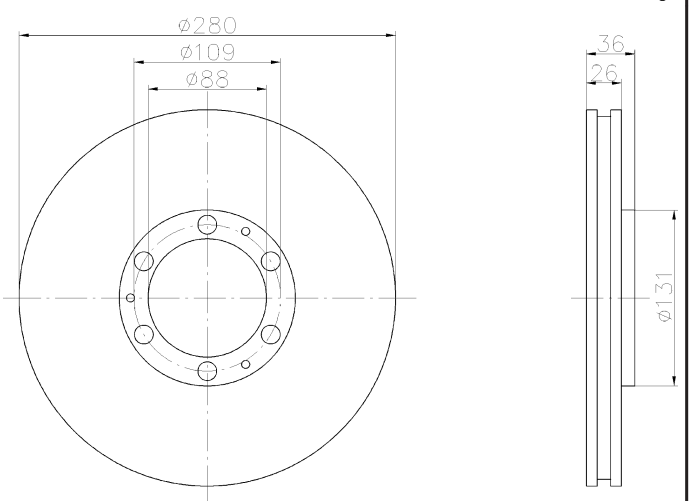

92091500

30.7

BUICK, CHEVROLET, OPEL, PONTIAC, VAUXHALL

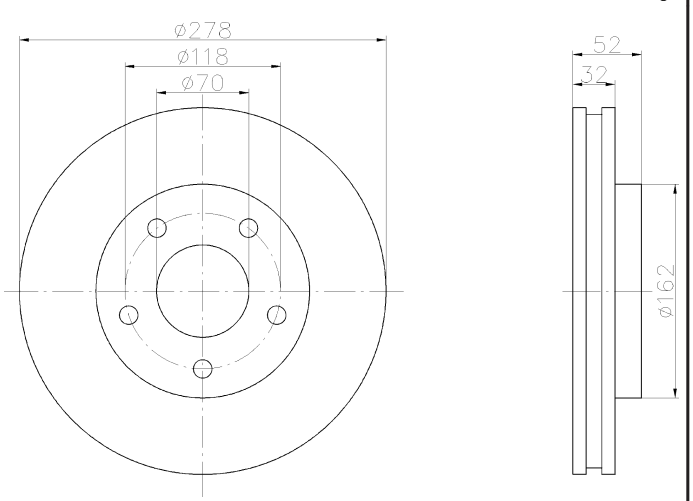

92091600

16.6

ACURA, HOLDEN, ISUZU, OPEL, VAUXHALL

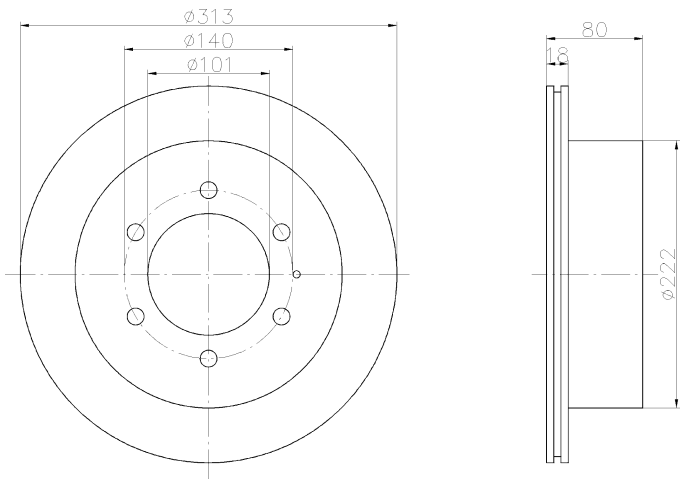

92091700

8

OPEL, VAUXHALL

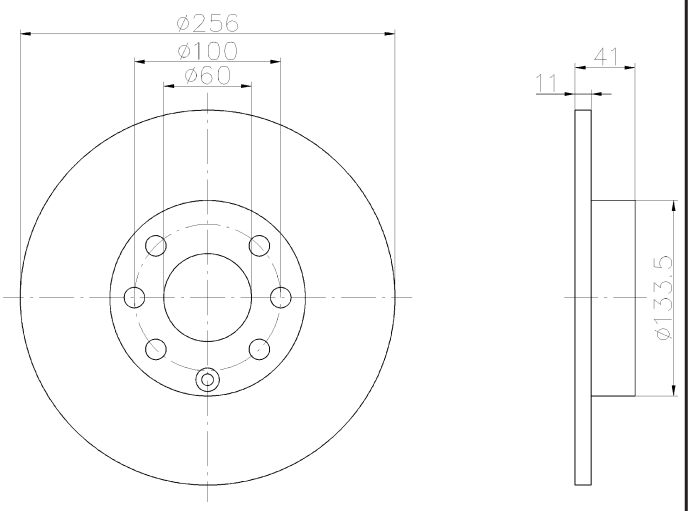

92091803

21 PRO

HOLDEN, OPEL, VAUXHALL

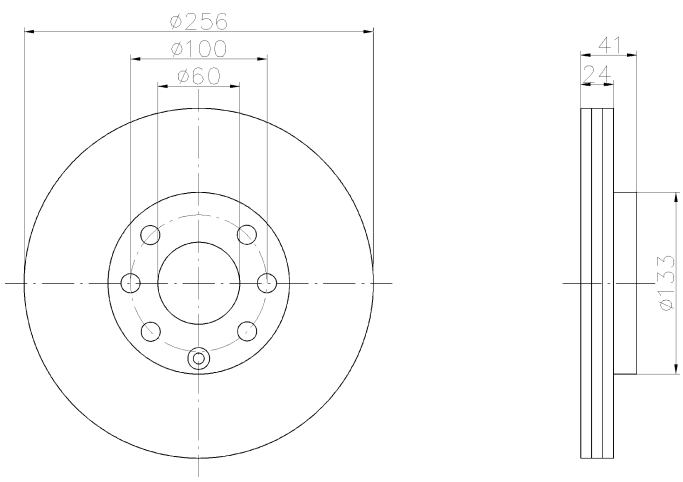

92091903

22 PRO

CHEVROLET, HOLDEN, OPEL, VAUXHALL

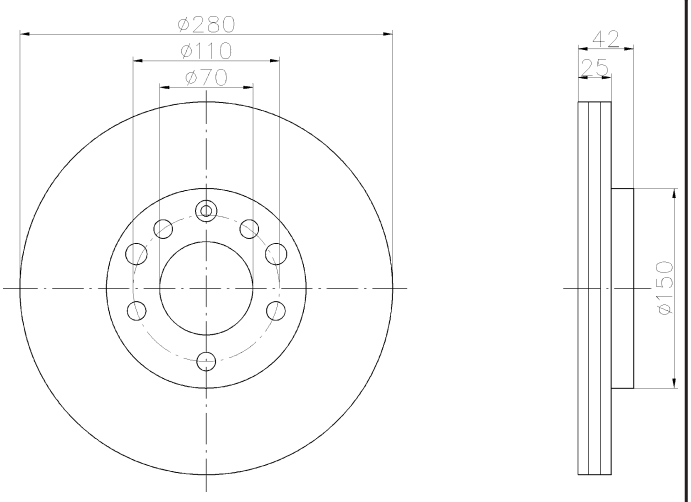

92092003

8 PRO

HOLDEN, OPEL, VAUXHALL

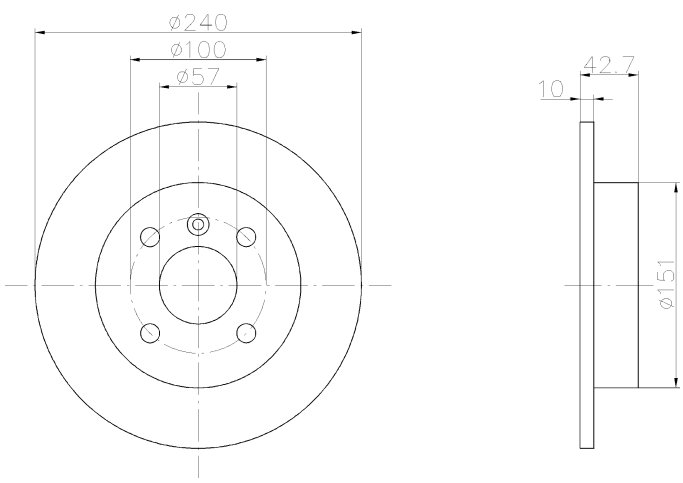

92092103

8 PRO

CHEVROLET, HOLDEN, OPEL, VAUXHALL

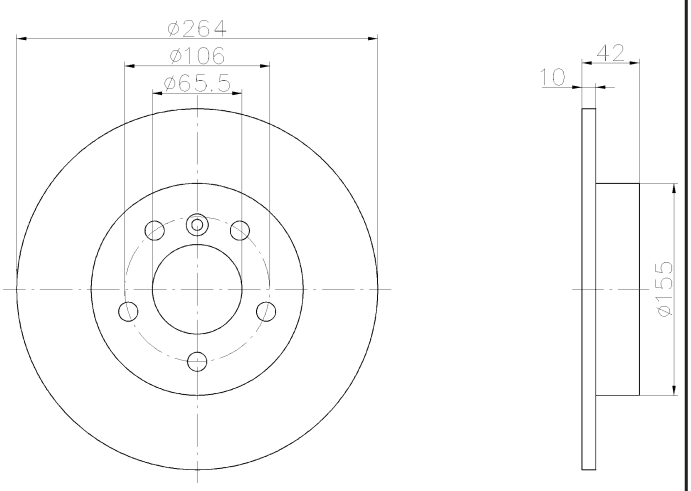

92092300

23

VOLVO

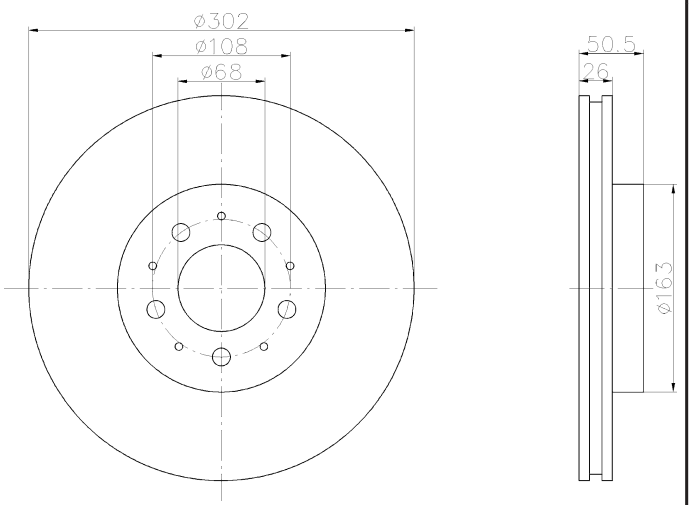

92092600

8.6

ROVER

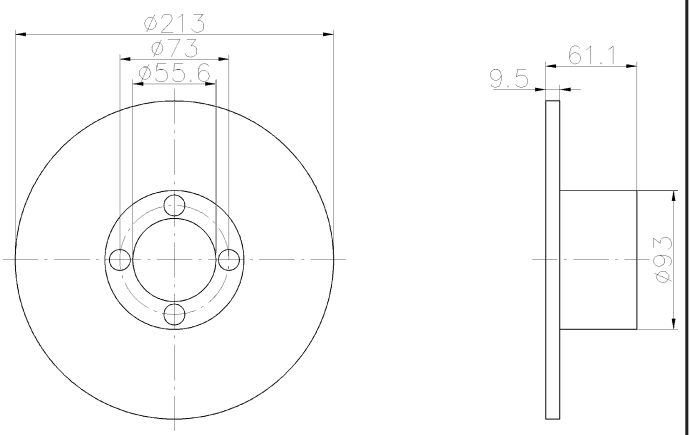

92092700

26

ALFA ROMEO

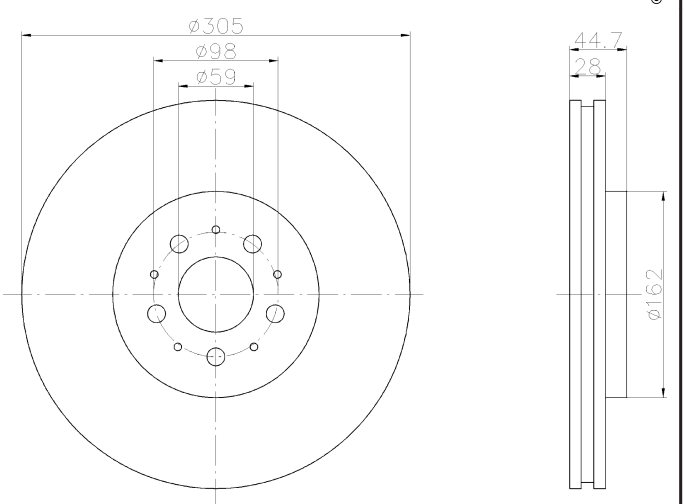

92092803

11 PRO

CITROËN, PEUGEOT

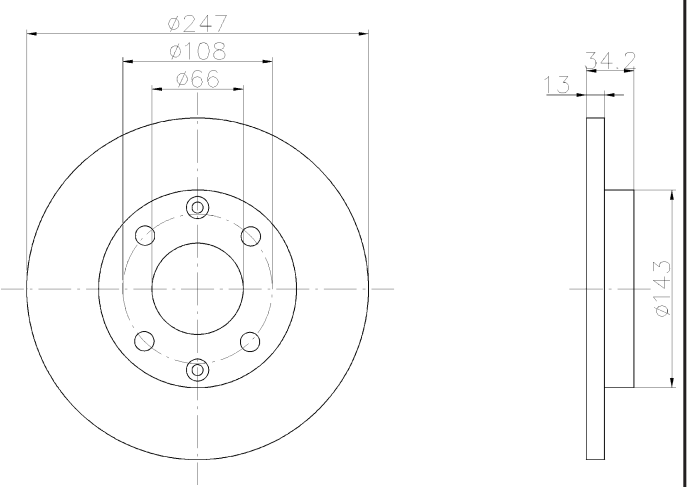

92092900

26

FIAT

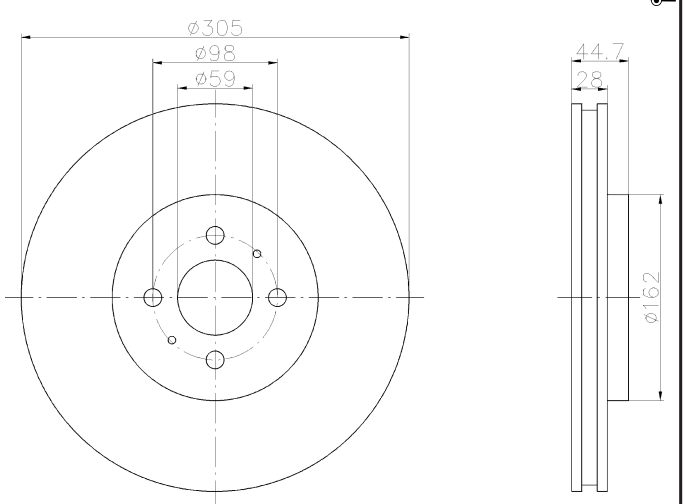

92093000

7.5

EUNOS, MAZDA

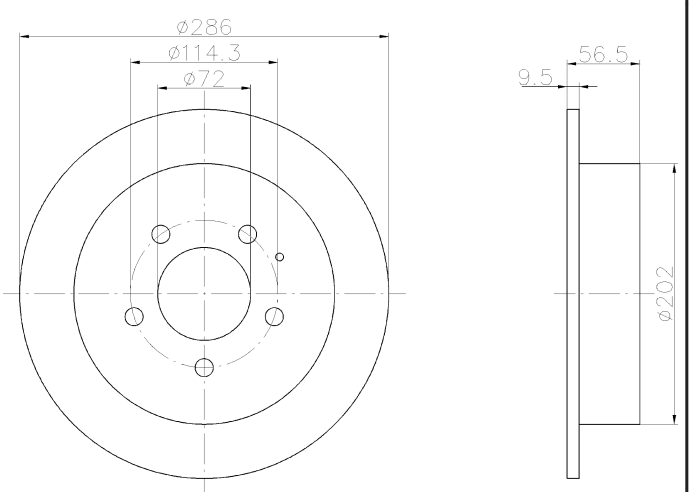

92093100

16.4

MITSUBISHI

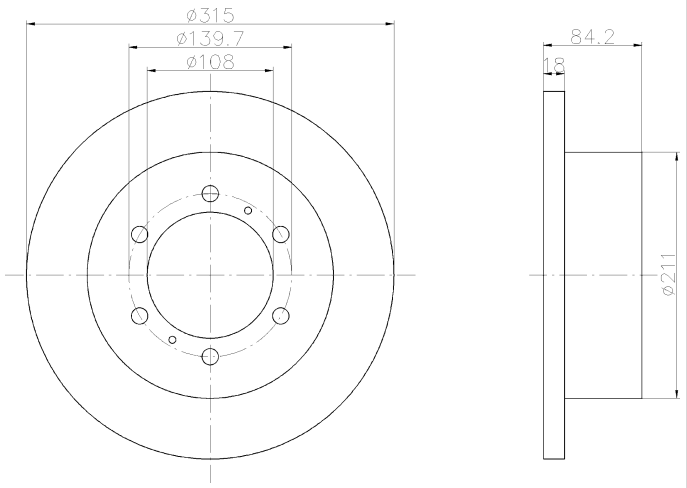

92093200

18

SUZUKI

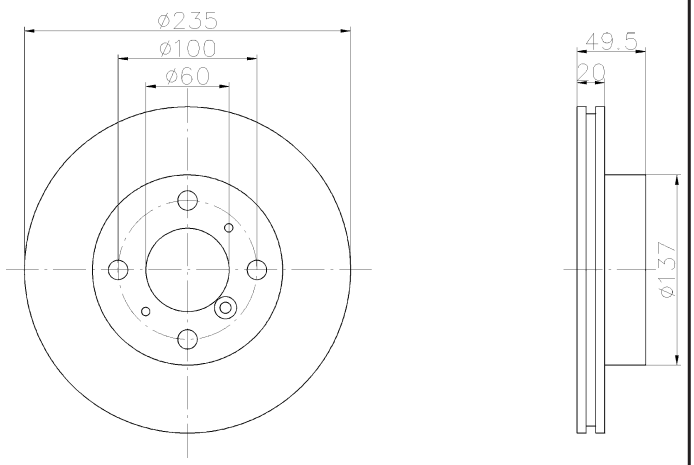

92093300

20

TOYOTA

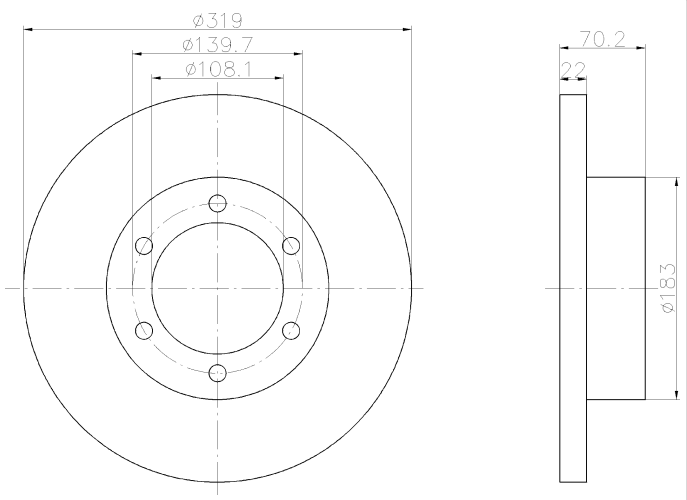

92093500

16

TOYOTA

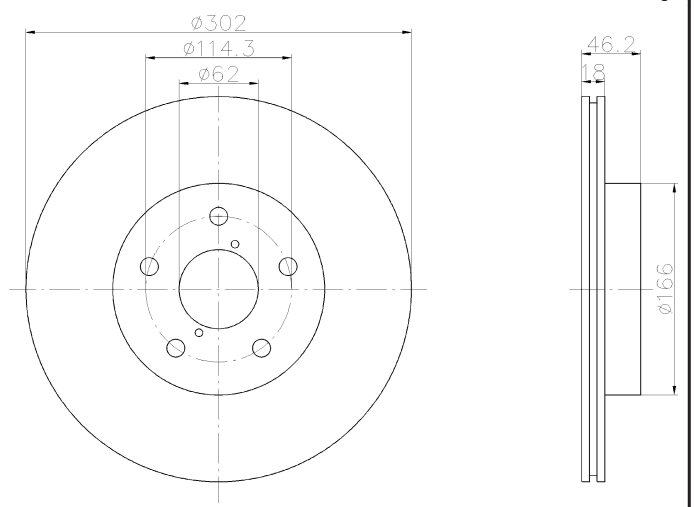

92093600

22

LAND ROVER

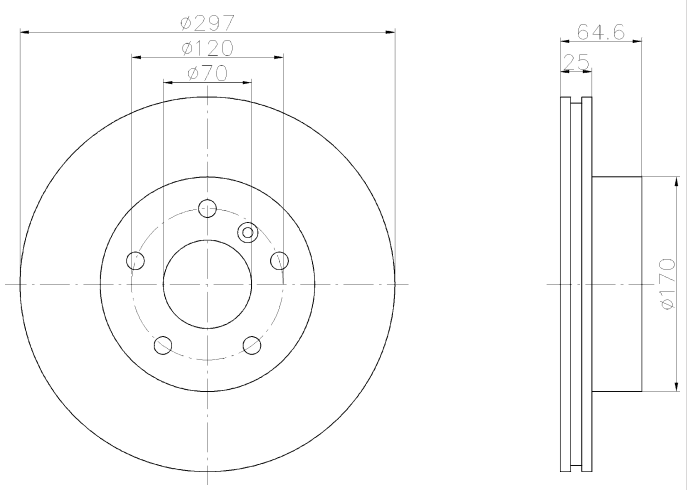

92093700

18.4

HYUNDAI

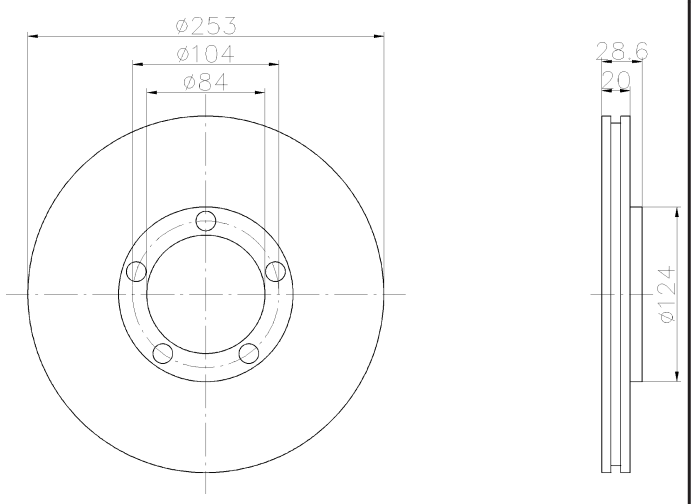

92093800

20.2

LANCIA

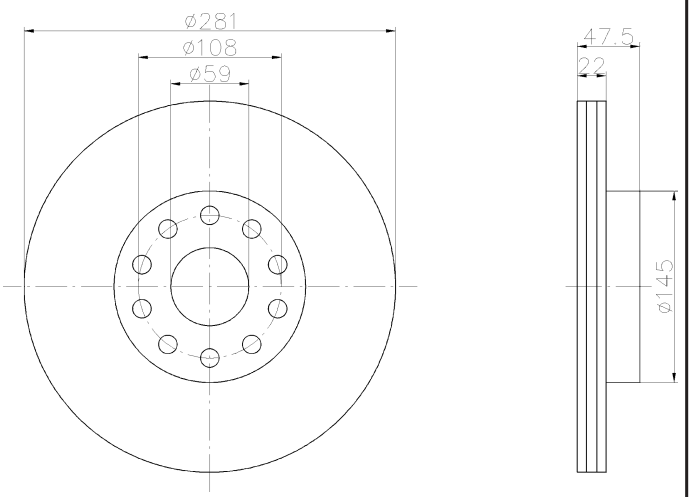

92093900

24.2

ALFA ROMEO, LANCIA

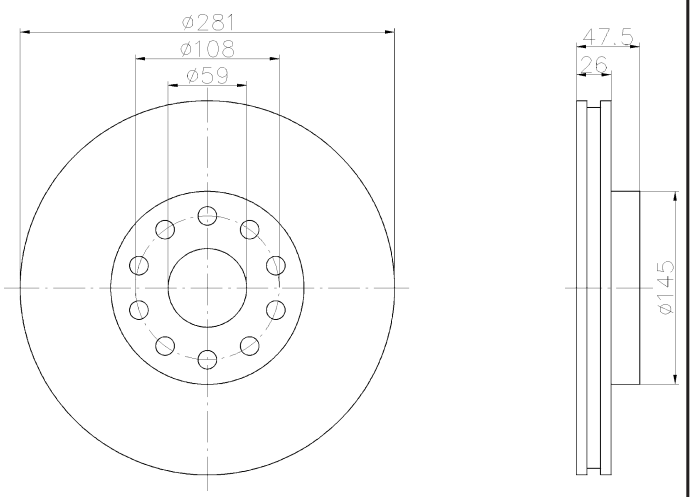

92094603

22 PRO

CHEVROLET, SAAB, SUBARU, TOYOTA

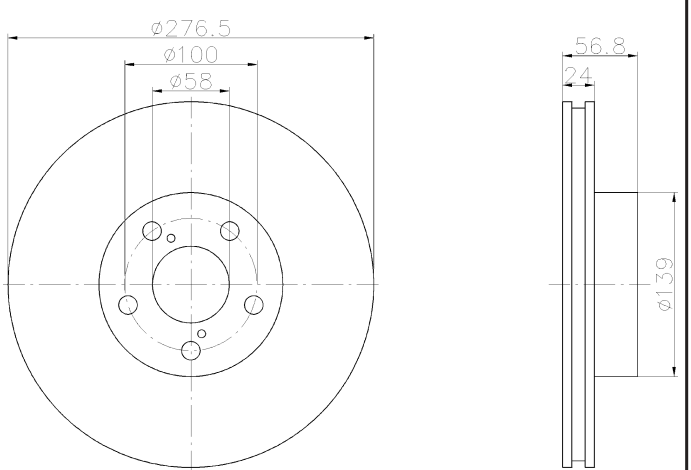

92095200

11.7

LAND ROVER

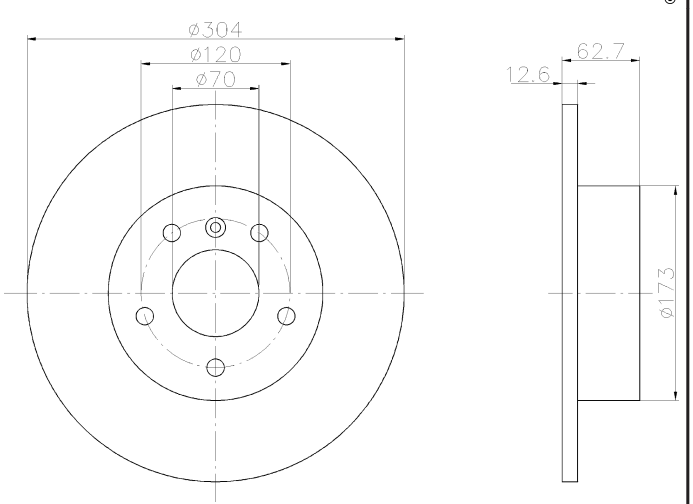

92095300

9

ALFA ROMEO, LANCIA

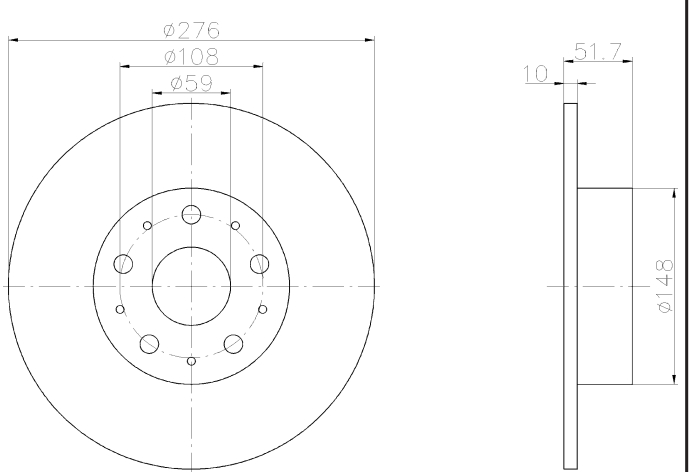

92095700

16.6

ISUZU

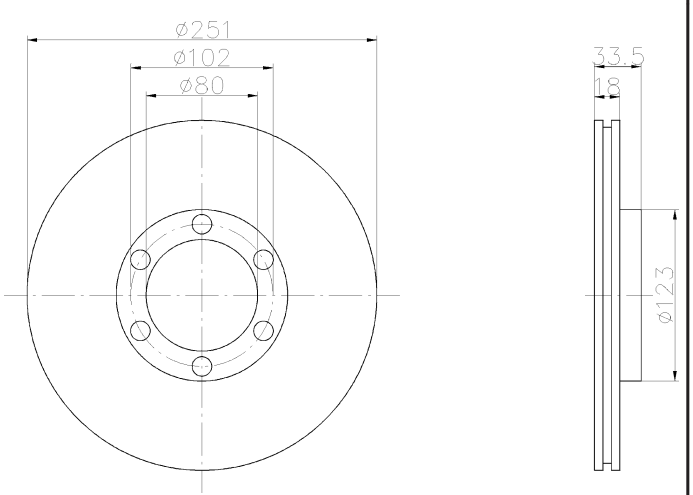

92096203

20 PRO

FORD, FORD ASIA / OZEANIA, FORD AUSTRALIA, MAZDA

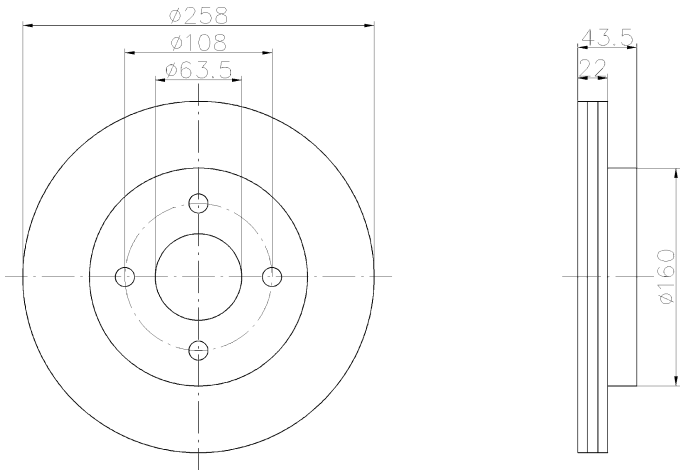

92096300

9.5

RENAULT

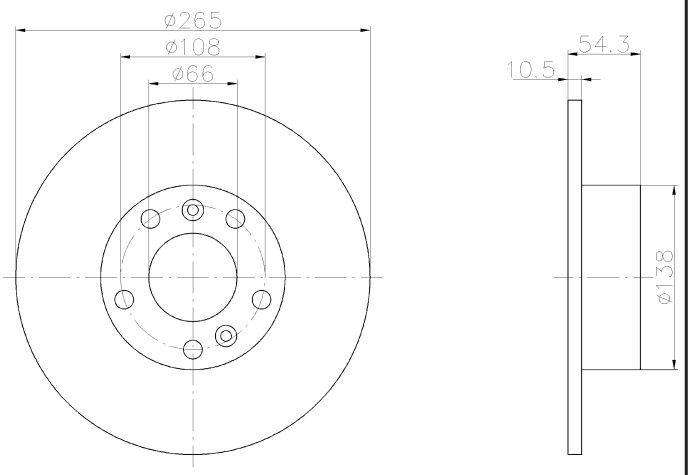

92096400

13.2

ALFA ROMEO

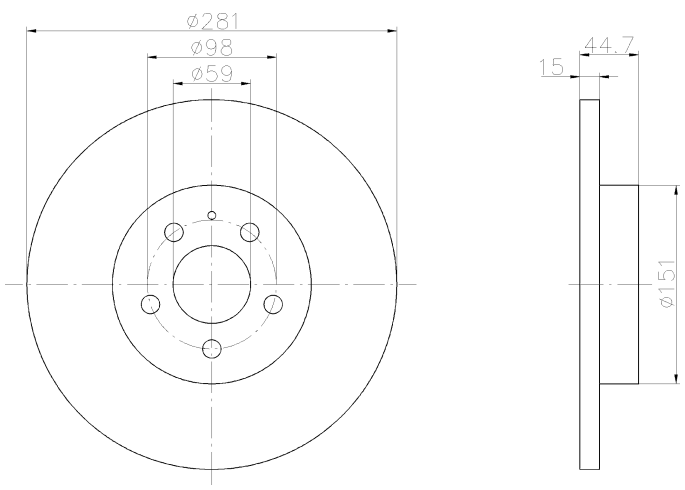

92096500

6

NISSAN

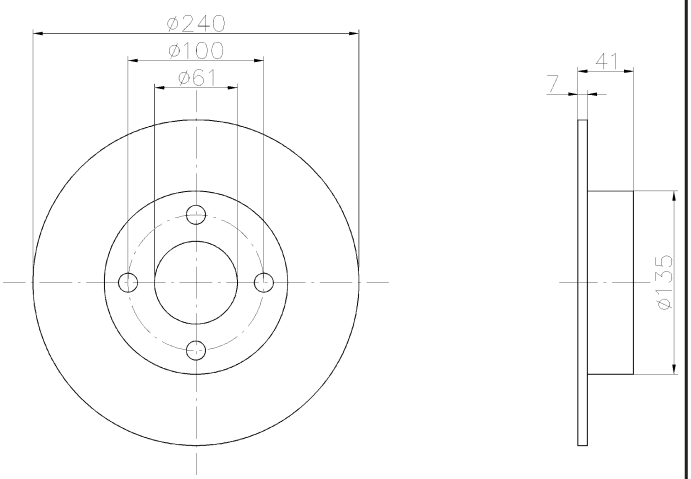

92096700

24

NISSAN

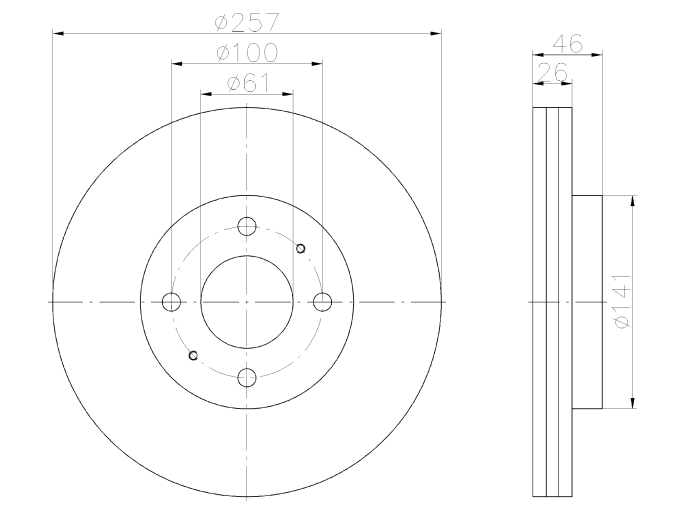

92096800

18

MAZDA

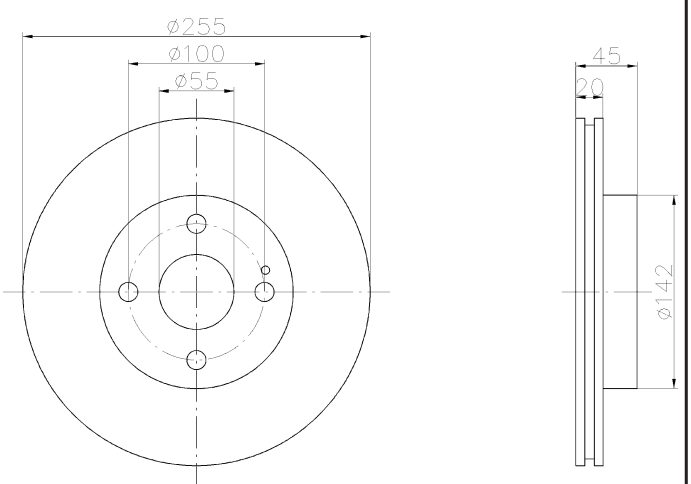

92096903

23 PRO

TOYOTA

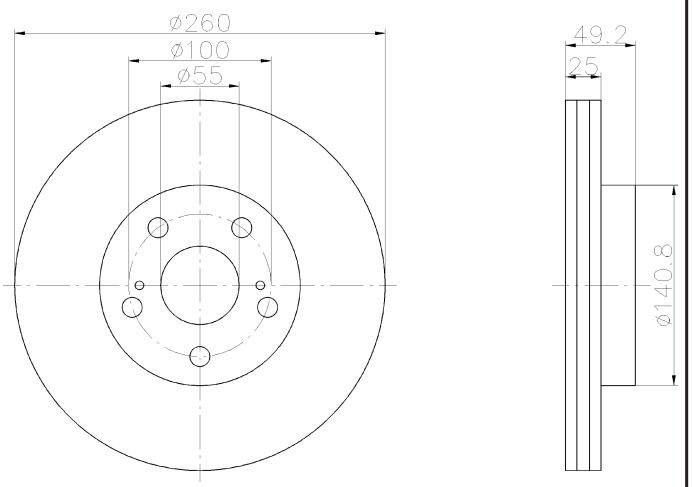

92097103

26 PRO

PEUGEOT

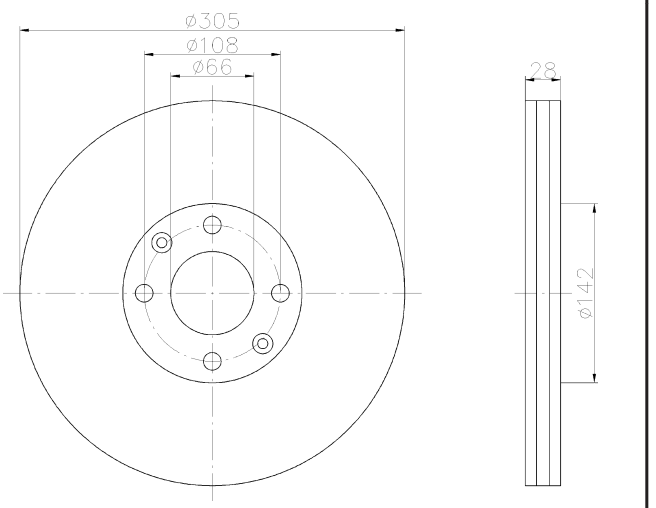

92097203

20.4 PRO

BMW, BMW (BRILLIANCE)

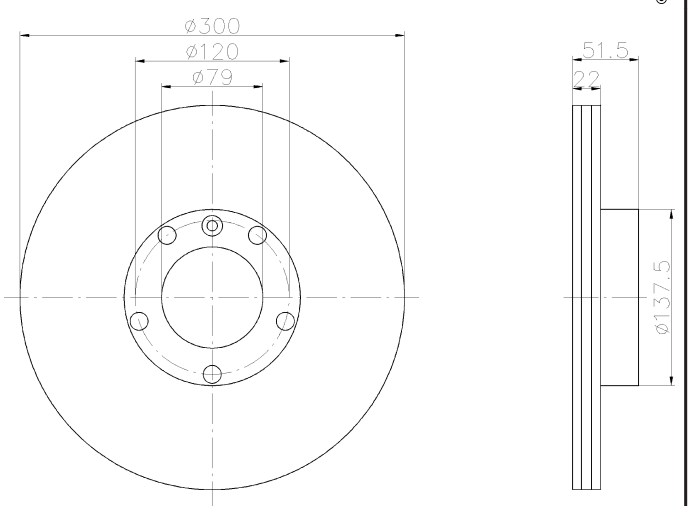

92097205

20.4 PRO

BMW, BMW (BRILLIANCE)

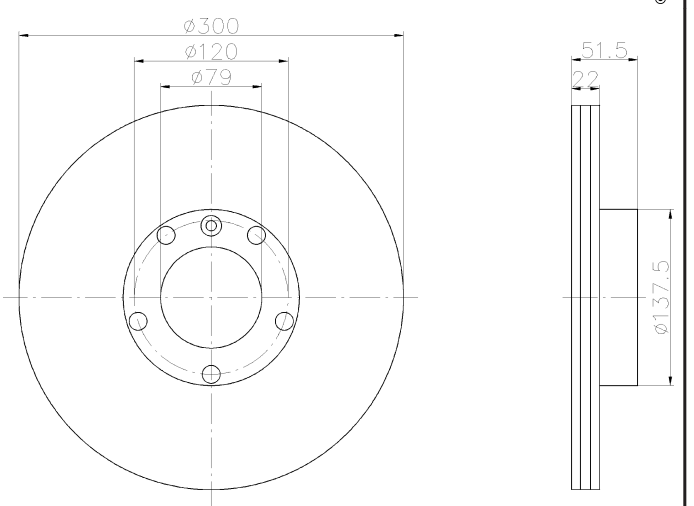

92097303

17.4 PRO

BMW, BMW (BRILLIANCE)

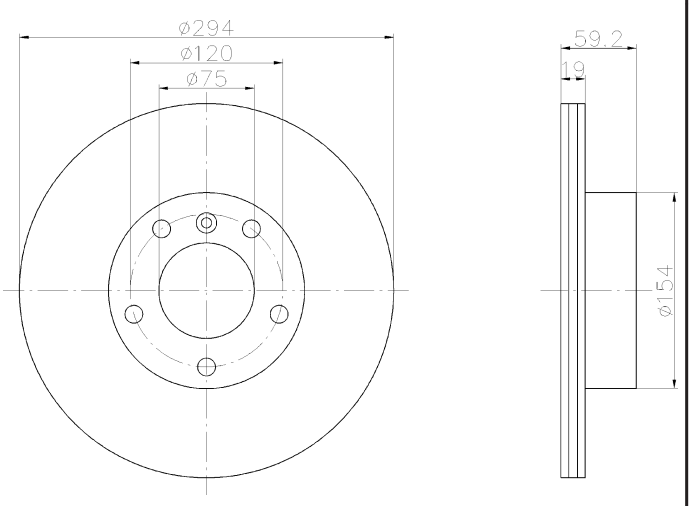

92097400

13.2

LANCIA

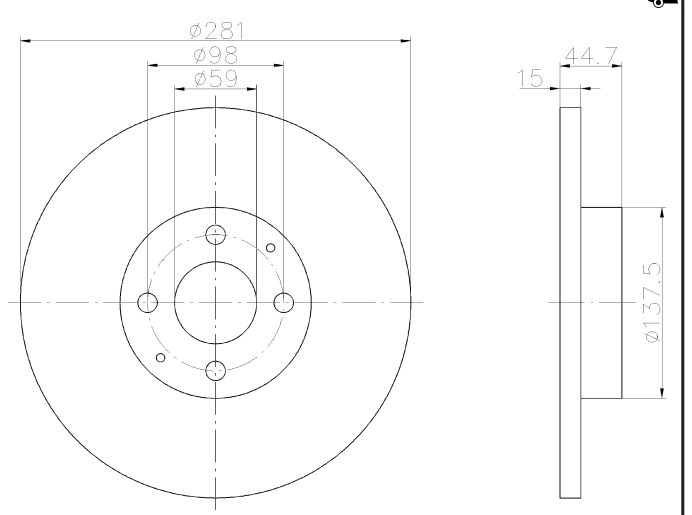

92097500

26

ALFA ROMEO, LANCIA

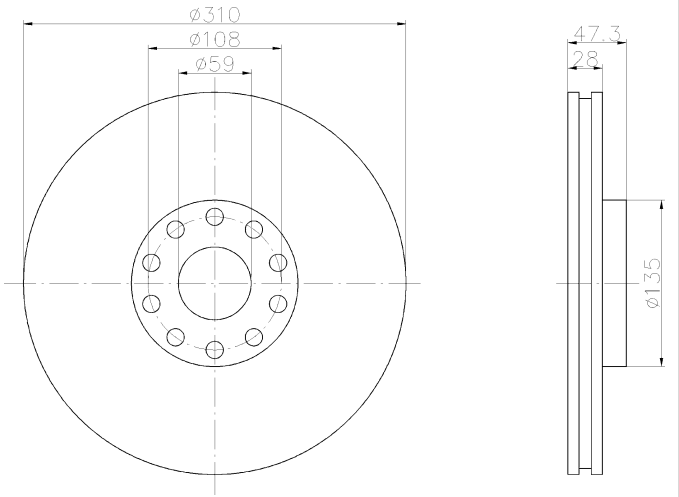

92097603

8 PRO

SMART

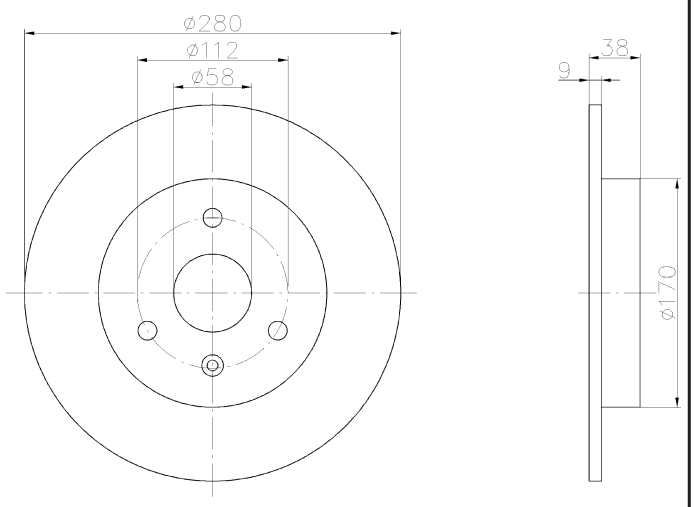

92097700

21

OPEL, RENAULT, VAUXHALL

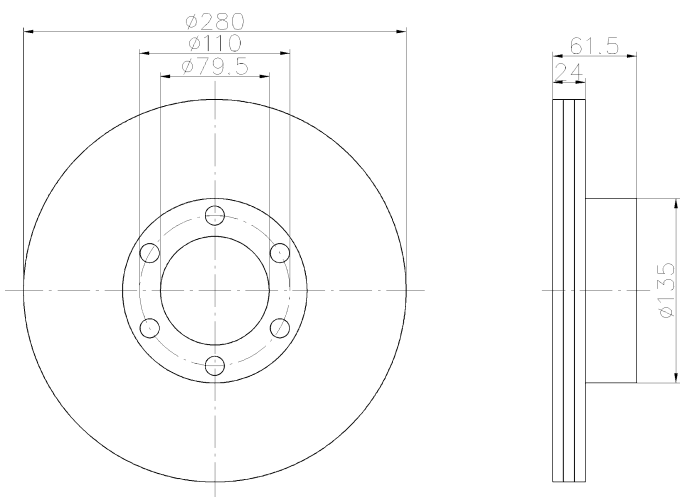

92097900

15

TOYOTA

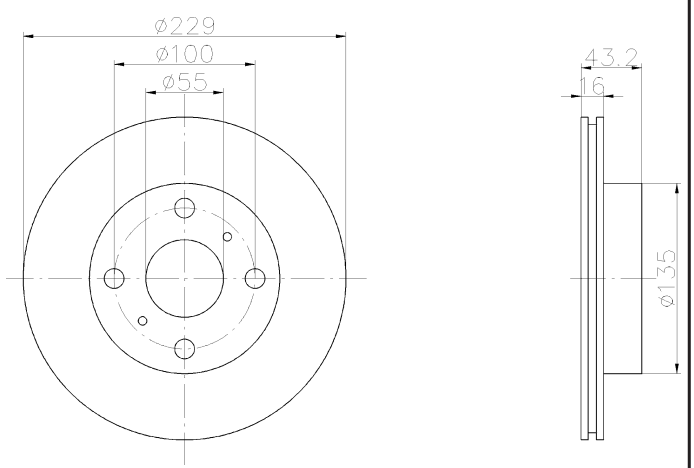

92098103

11.5 PRO

FORD, SEAT, VOLKSWAGEN

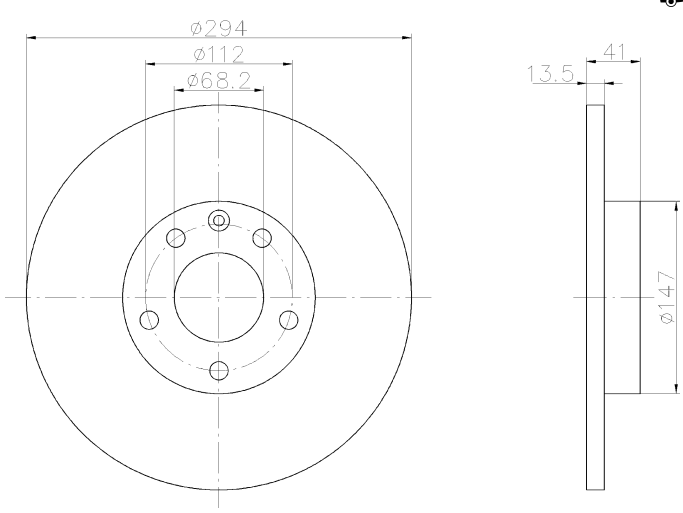

92098203

7 PRO

SEAT, VOLKSWAGEN

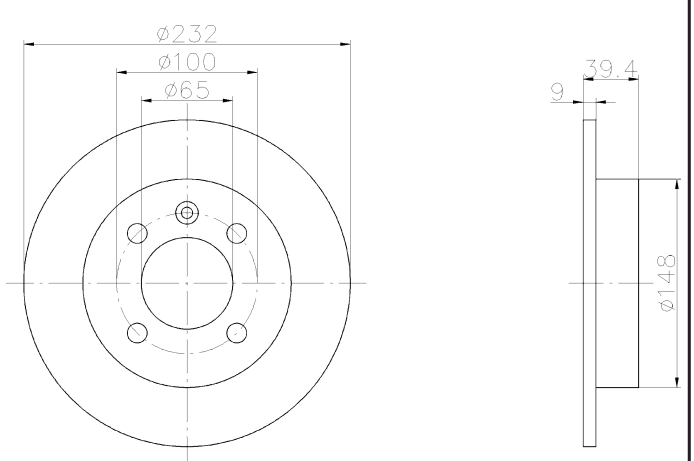

92098300

28

AUDI

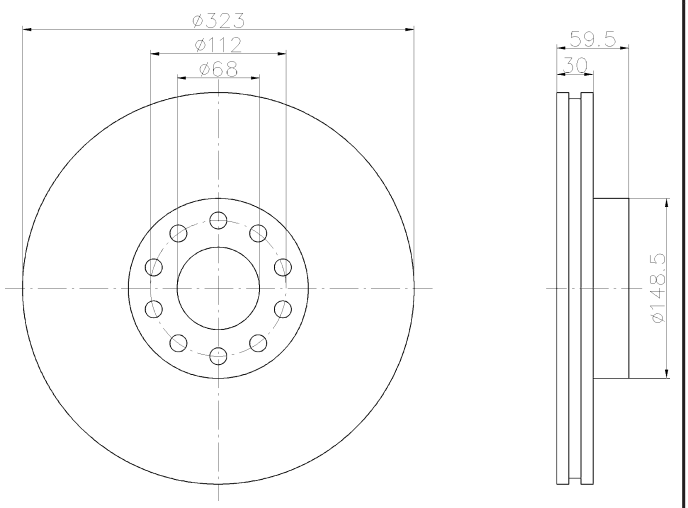

92098303

PRO

28

AUDI

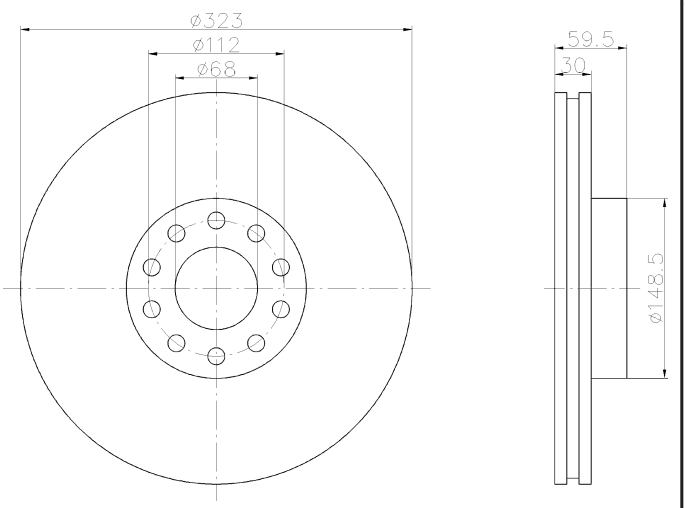

92098305

PRO

28

AUDI

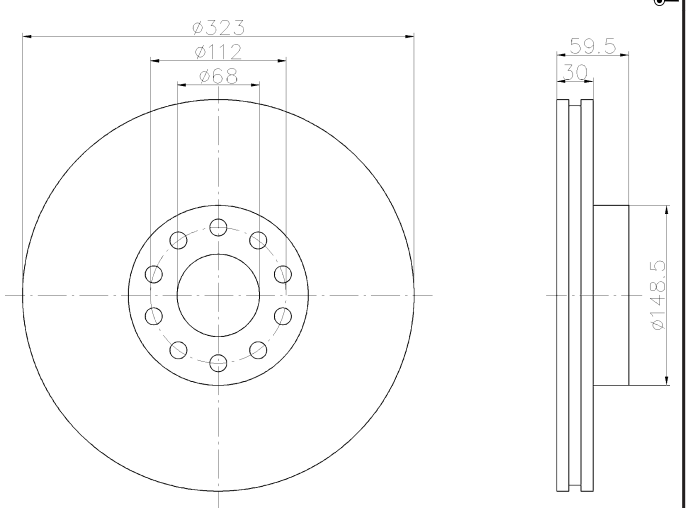

92098400

20

AUDI

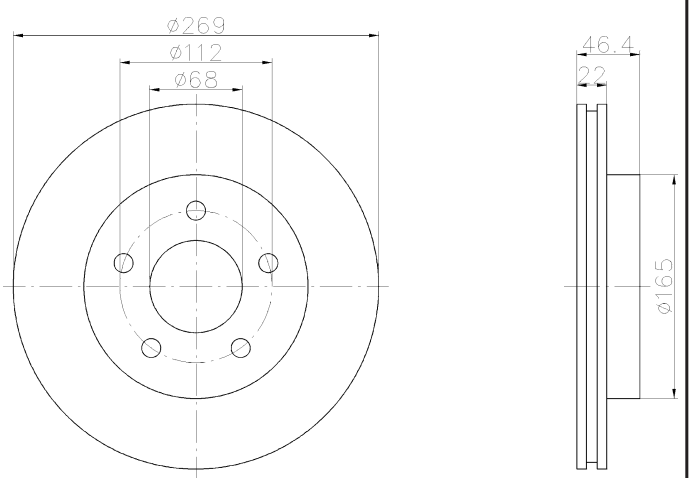

92098503

PRO

23

AUDI, SEAT, SKODA, VOLKSWAGEN

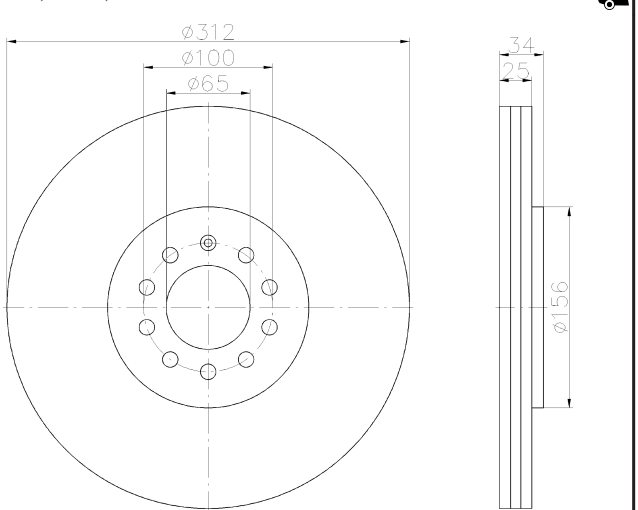

92098603

PRO

20

AUDI, SEAT, SKODA, VOLKSWAGEN

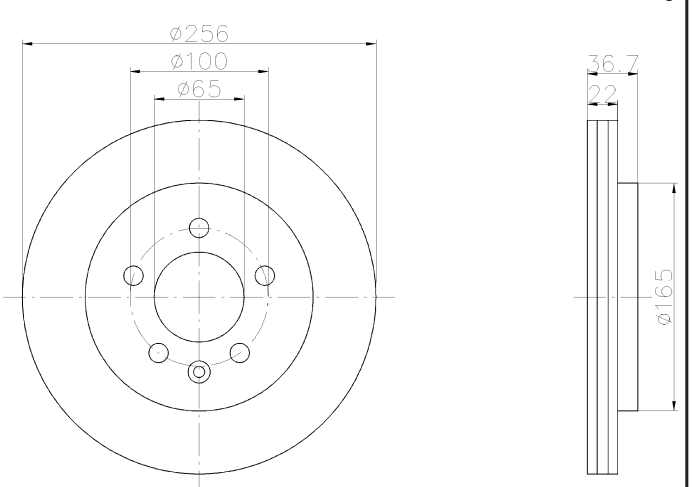

92098703

18.4 PRO

BMW, WIESMANN

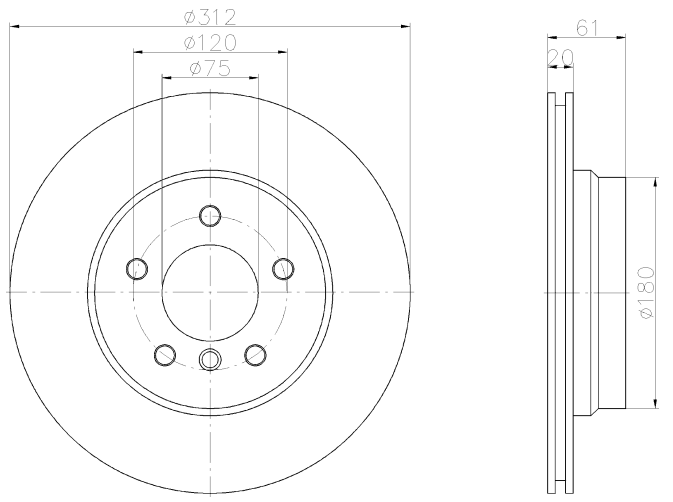

92098803

18.4 PRO

BMW, WIESMANN

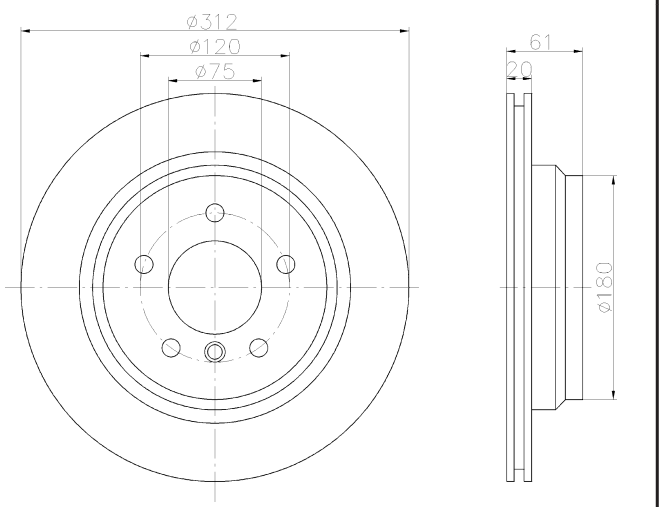

92098900

26

DAIMLER, JAGUAR

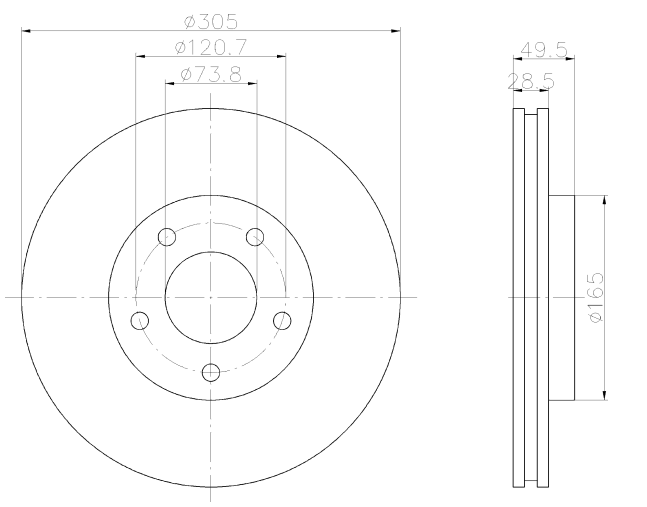

92099003

28 PRO

FORD USA, JAGUAR, LINCOLN

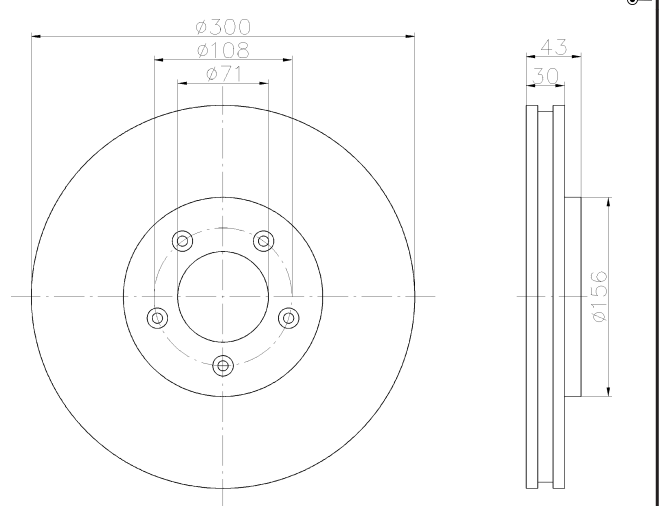

92099100

18.5

FORD USA, JAGUAR, LINCOLN

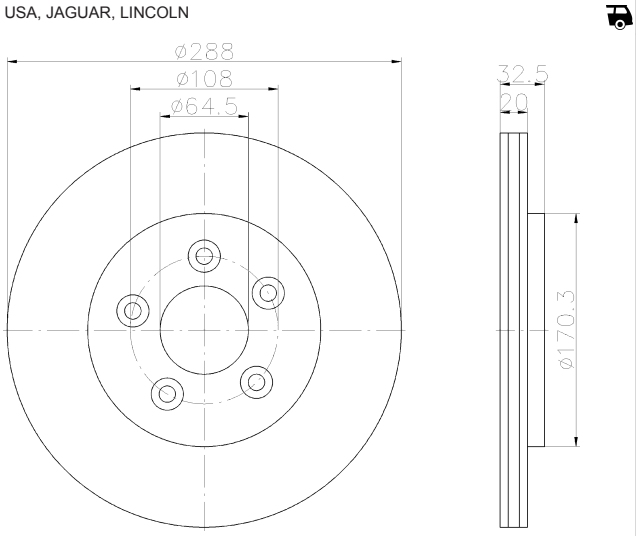

92099203

30 PRO

MERCEDES-BENZ

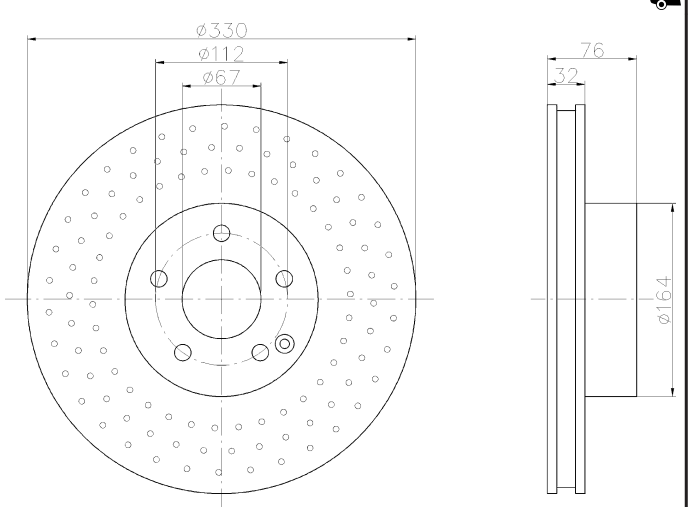

92099303

26 PRO

MERCEDES-BENZ

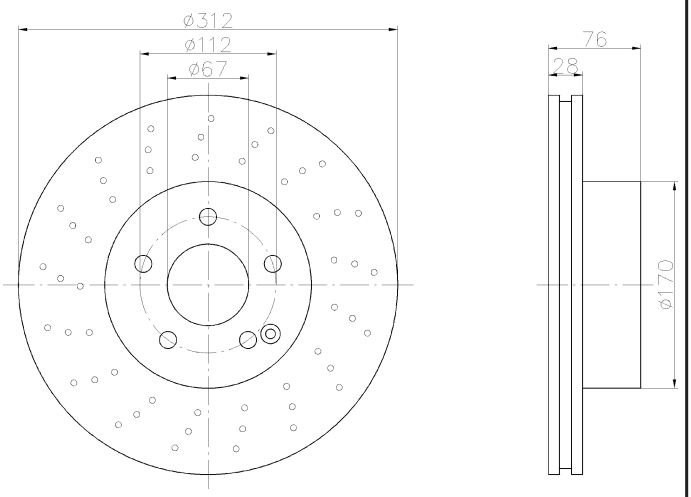

92099403

9.3 PRO

MERCEDES-BENZ

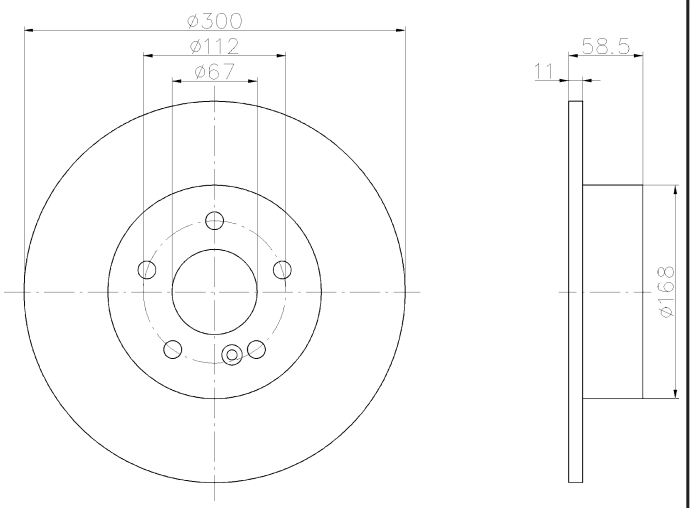

92099503

19.4 PRO

MERCEDES-BENZ

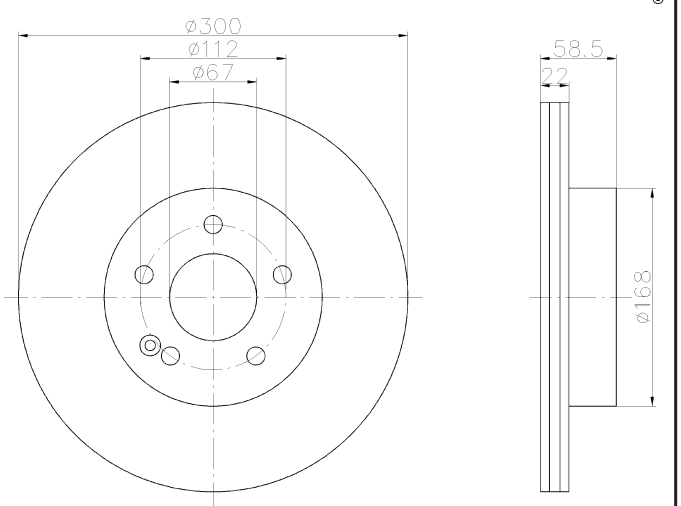

92099603

19.4 PRO

MERCEDES-BENZ

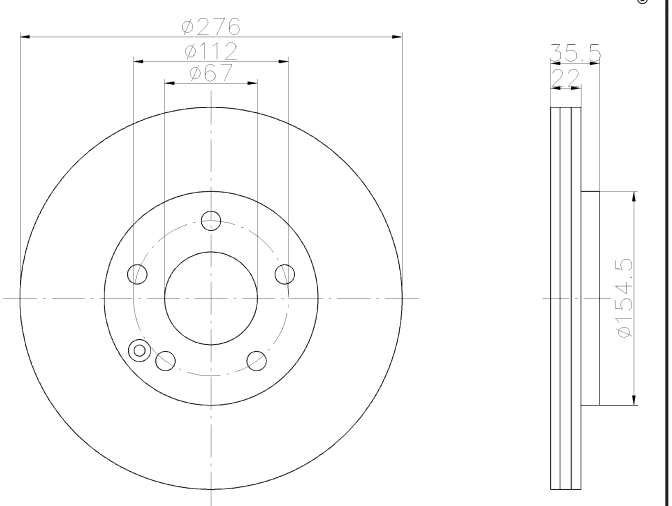

92099703

7 PRO

MERCEDES-BENZ

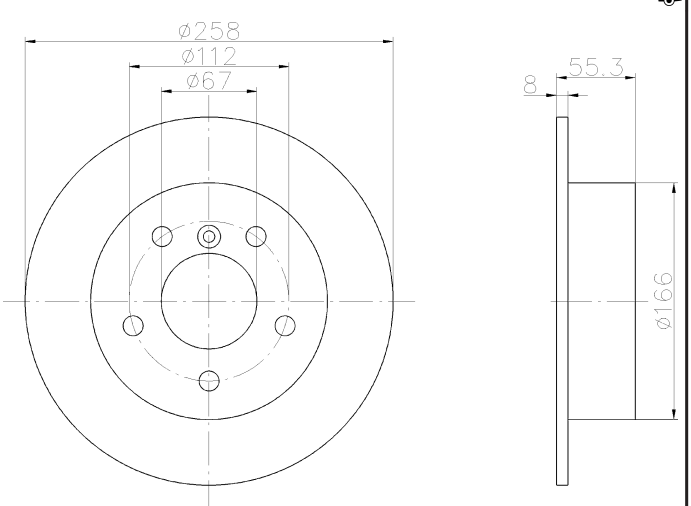

92099800

9

BUICK, CHEVROLET, OPEL, PONTIAC, VAUXHALL

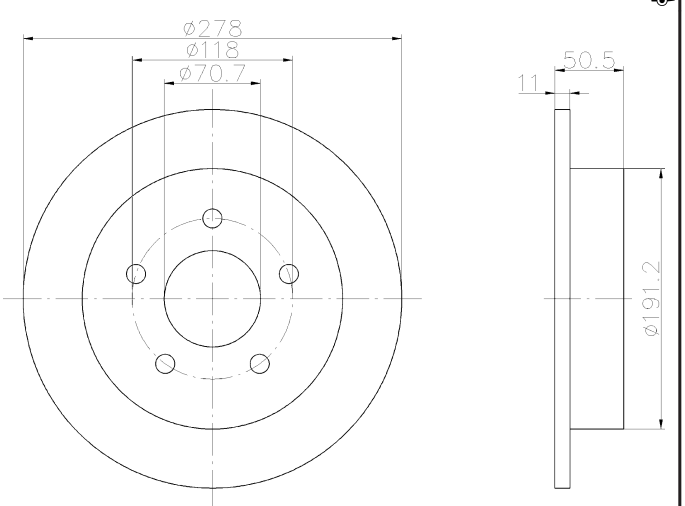

92099903

26 PRO

PORSCHE

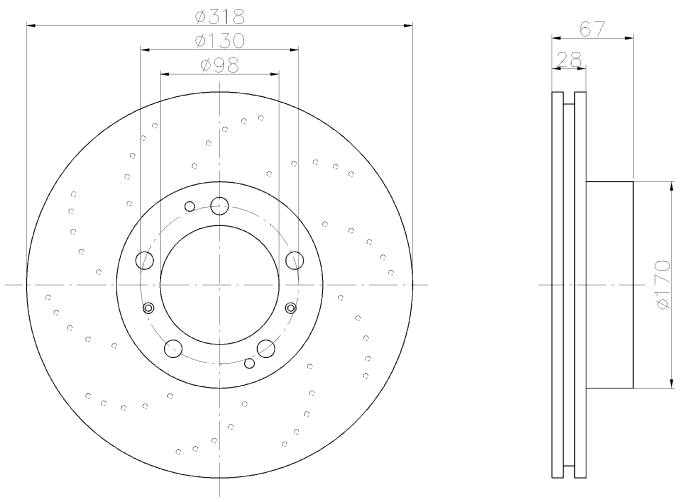

92100003

26 PRO

PORSCHE

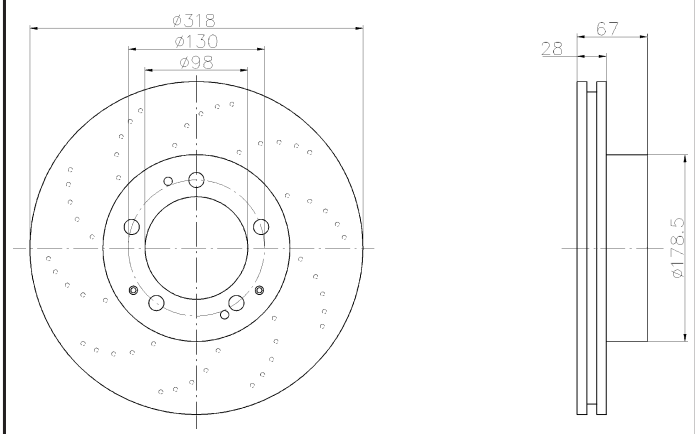

92100103

22 PRO

PORSCHE

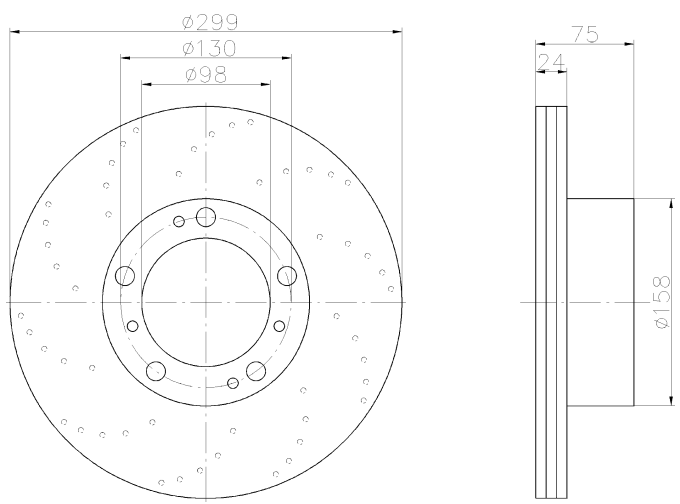

92100200

8

SAAB

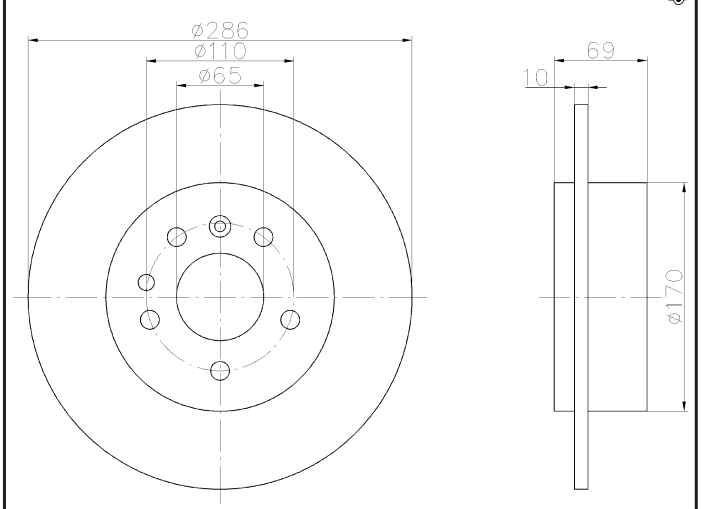

92100300

9.7

CHEVROLET, DAEWOO, PONTIAC

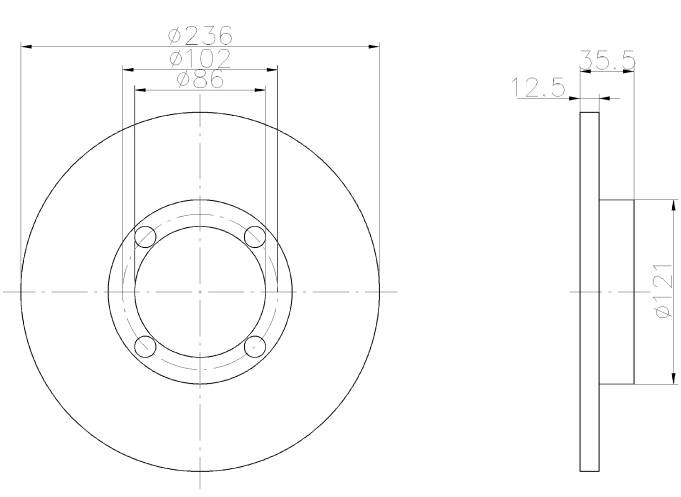

92100403

21.5 PRO

MITSUBISHI, VOLVO

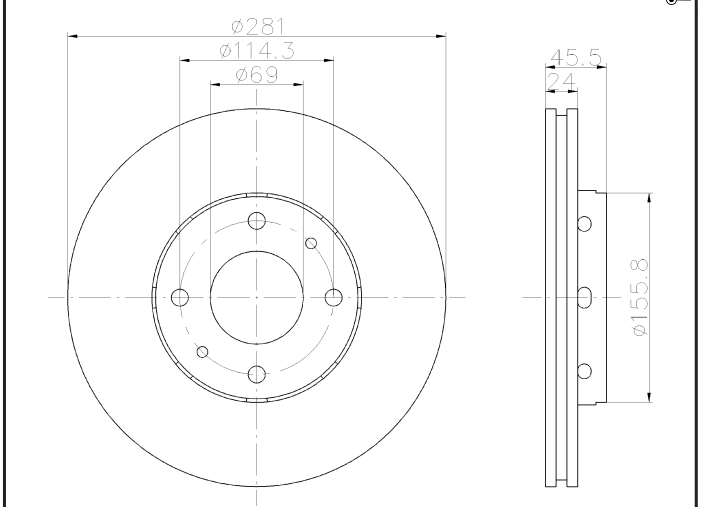

92100503

23 PRO

HONGQI, VOLVO

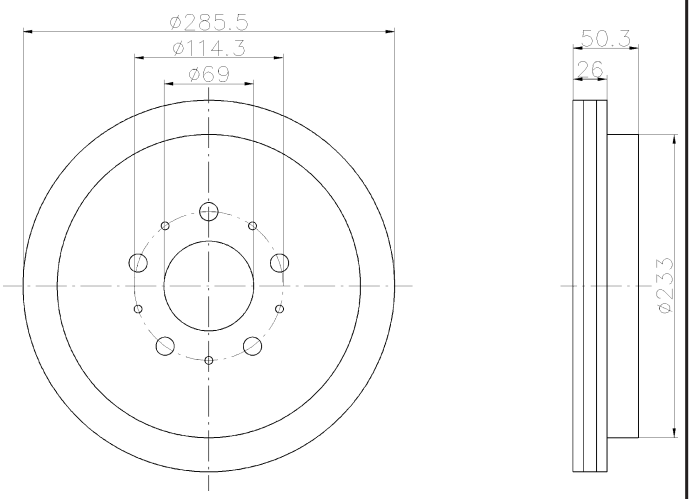

92100603

25 PRO

VOLVO

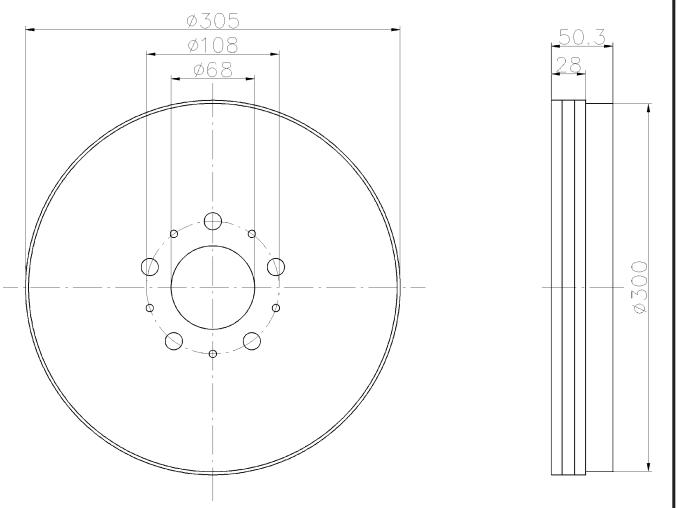

92100703

10 PRO

VOLVO

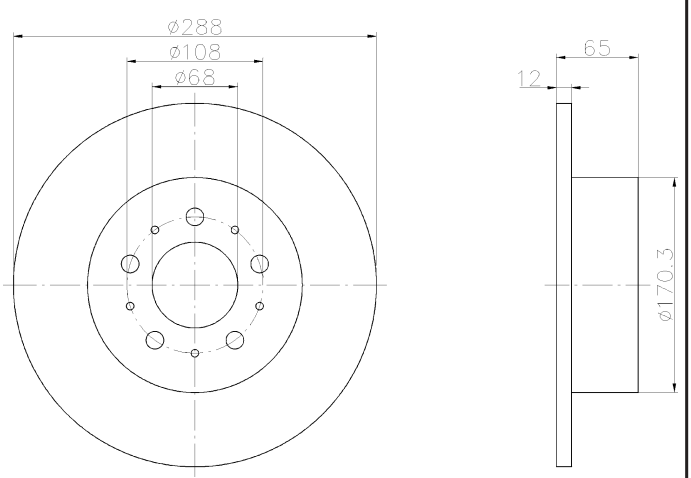

92100903

17.7 PRO

DACIA, NISSAN, RENAULT

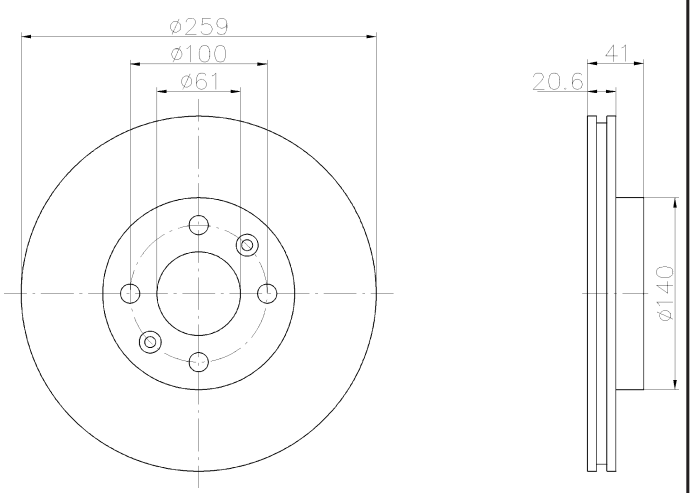

92101000

21

ACURA, HONDA

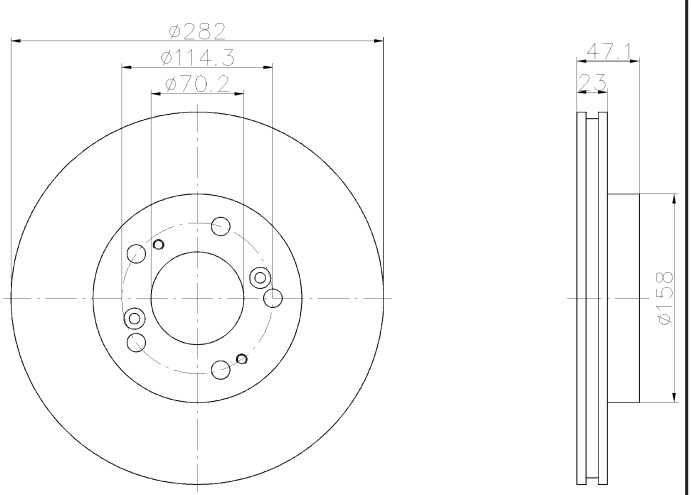

92102500

22.4

MITSUBISHI

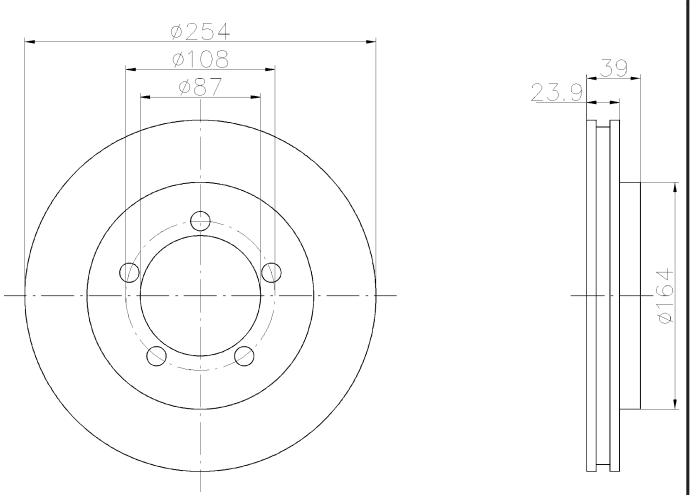

92102600

21

CHEVROLET, DAEWOO

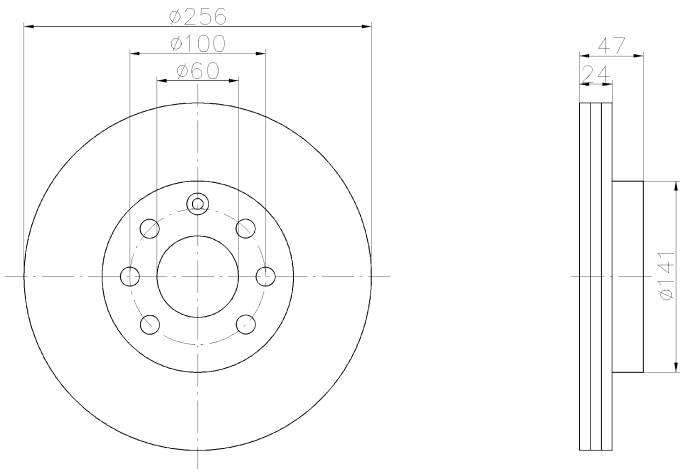

92102800

9.4

HYUNDAI

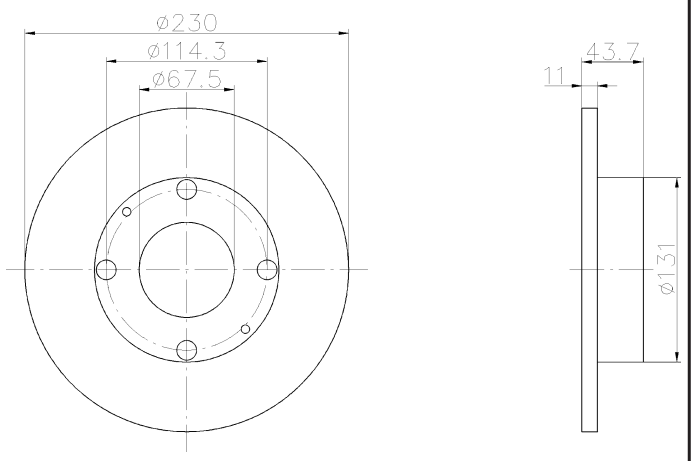

92102900

11

LAND ROVER

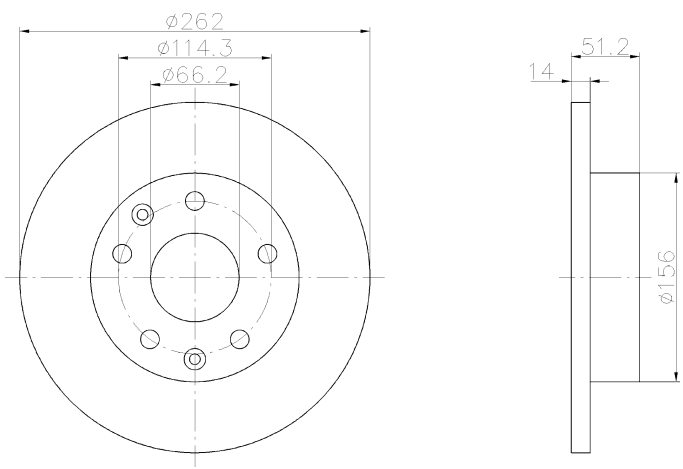

92103000

20

MAZDA

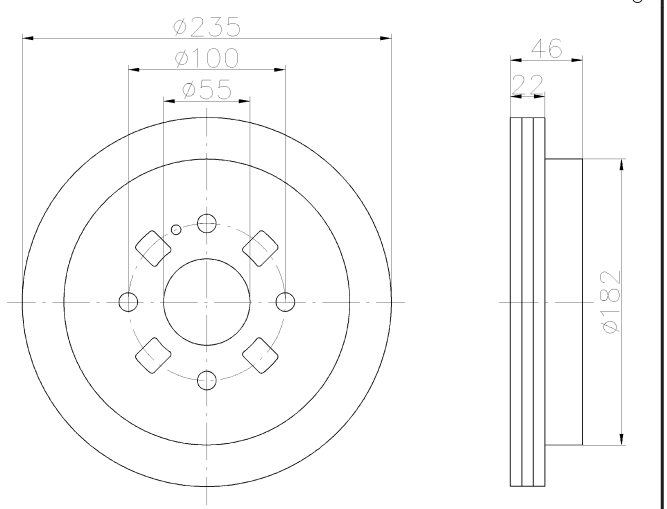

92103100

22

FORD AUSTRALIA, HAIMA (FAW), MAZDA, TOYOTA (FAW), TOYOTA (GAC)

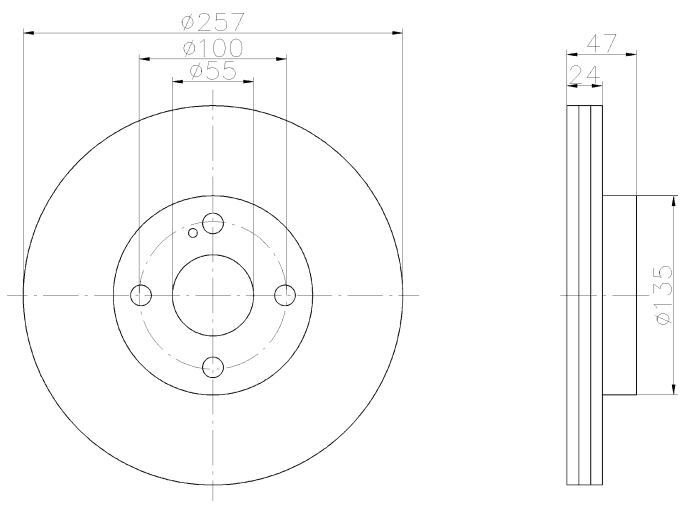

92103203

30 PRO

MERCEDES-BENZ

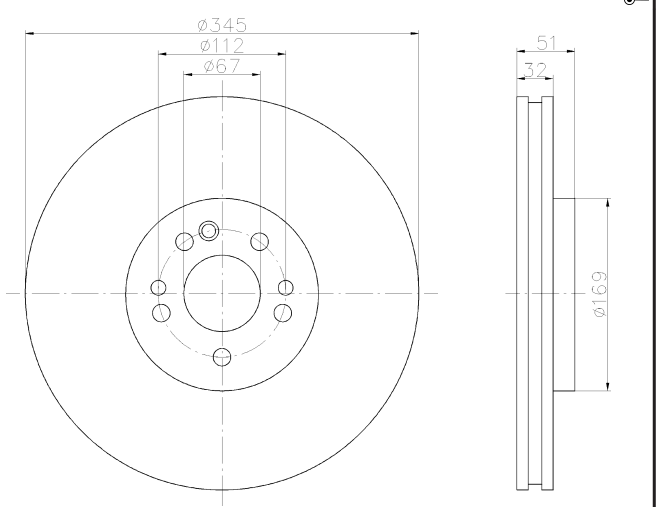

92103205

30 PRO

MERCEDES-BENZ

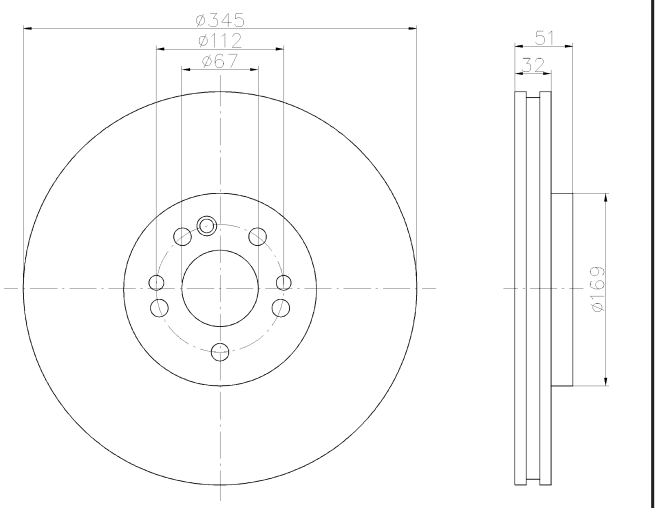

92103303

12.3 PRO

MERCEDES-BENZ

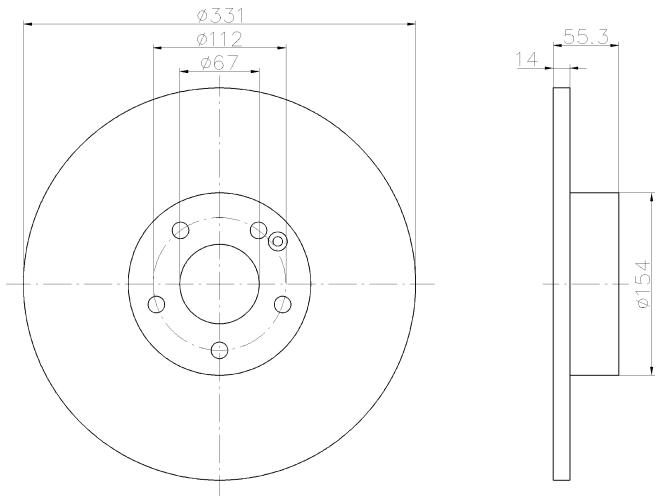

92103400

19

MG, ROEWE (SAIC), ROVER

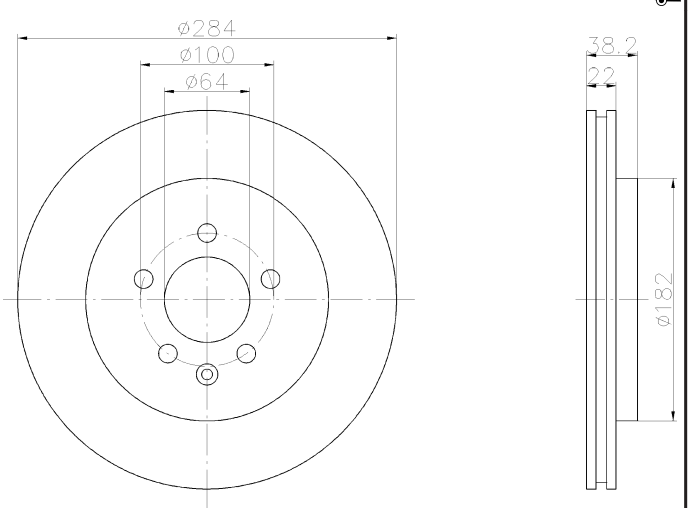

92103500

8

MG, ROEWE (SAIC), ROVER

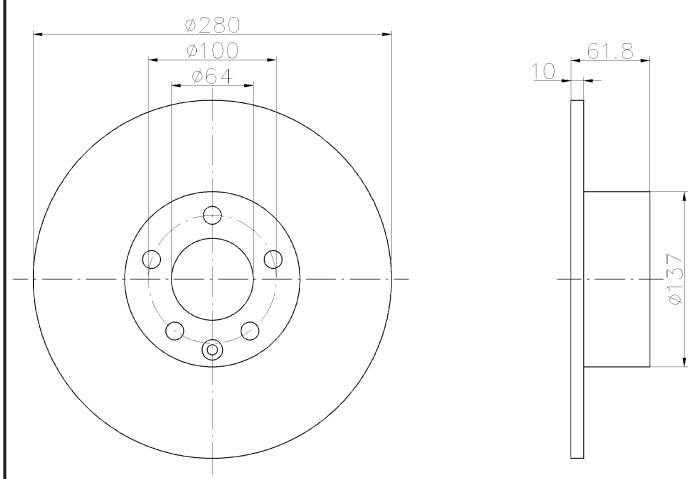

92103603

16 PRO

TOYOTA

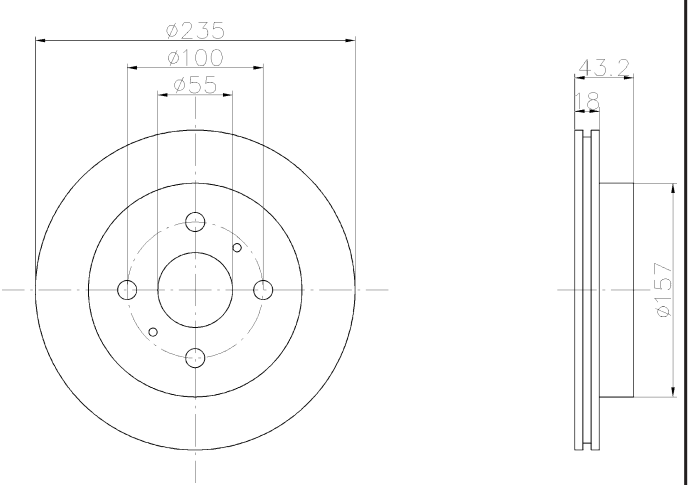

92103700

10

DAIHATSU, PERODUA

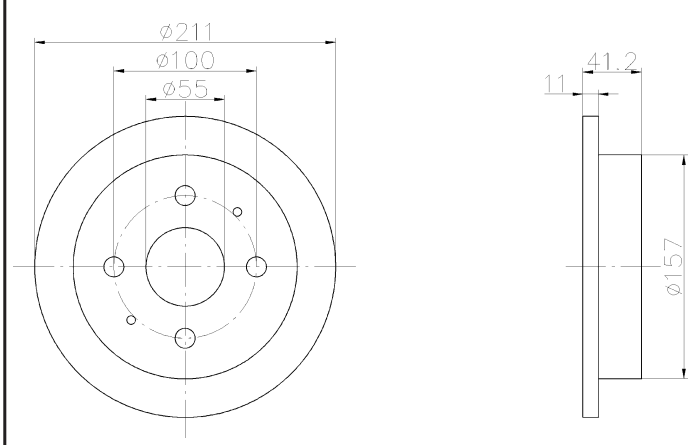

92103803

22.1 PRO

FORD, FORD AUSTRALIA

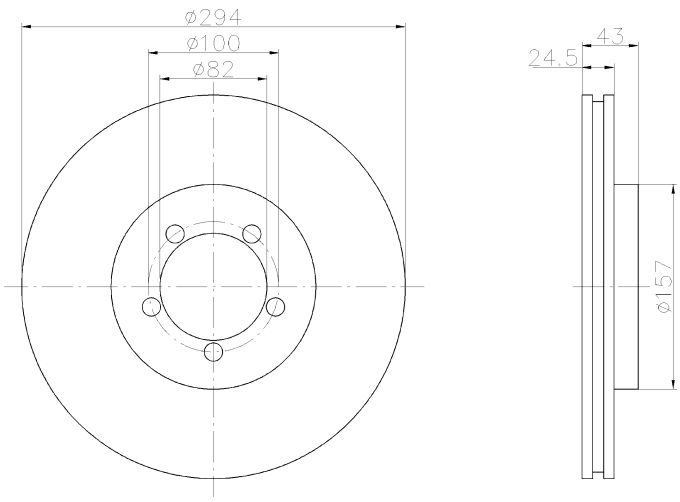

92103900

22.4

HYUNDAI, KIA, MITSUBISHI, PROTON, VOLVO

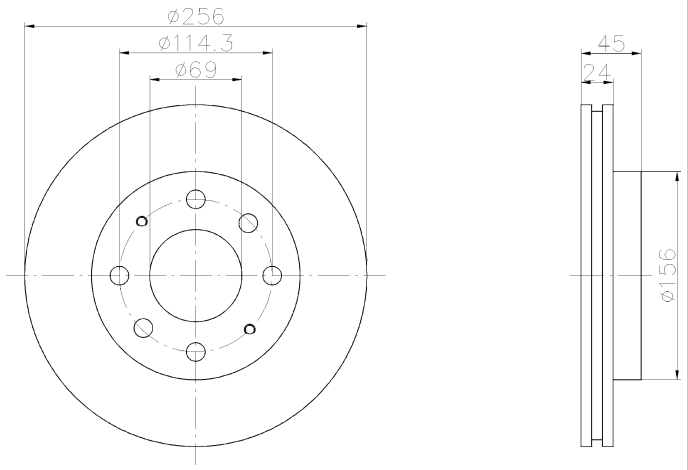

92104000

8.4

HYUNDAI, KIA, MITSUBISHI, PROTON

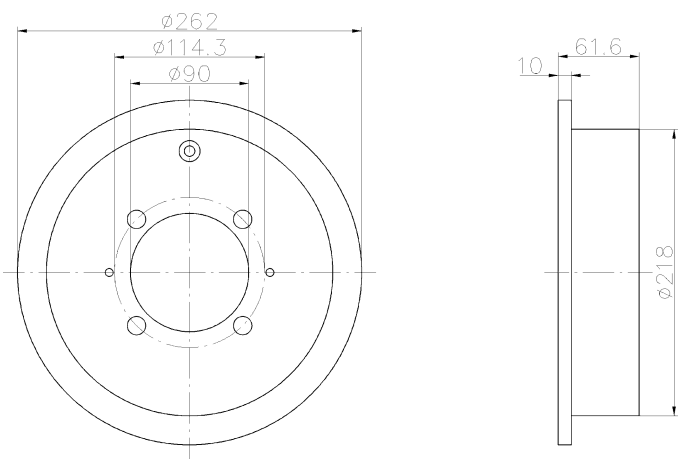

92104103

8 PRO

AUDI

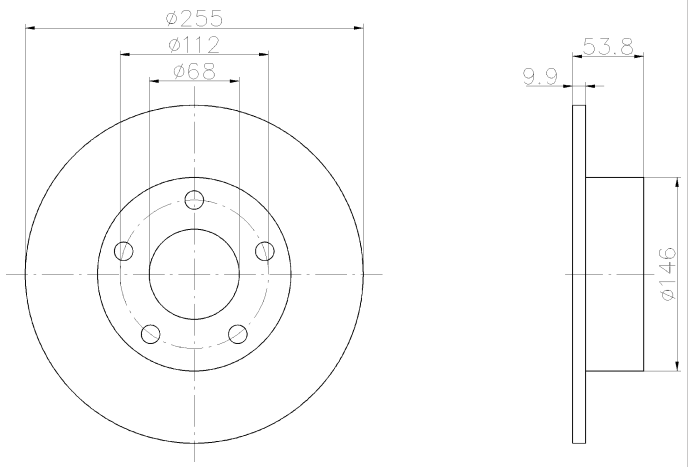

92104200

22

KIA

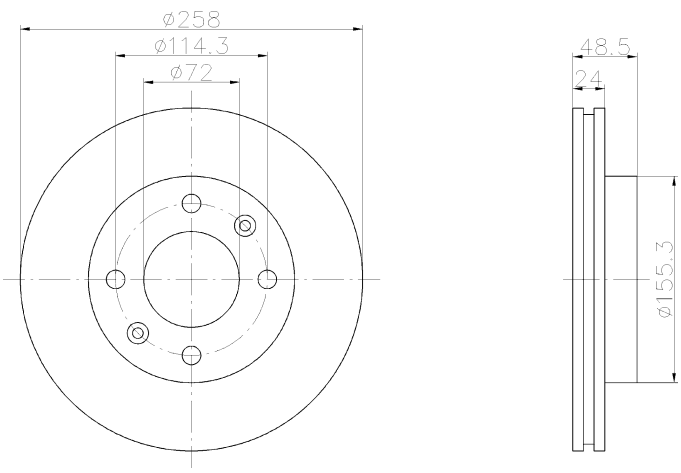

92104300

8

KIA

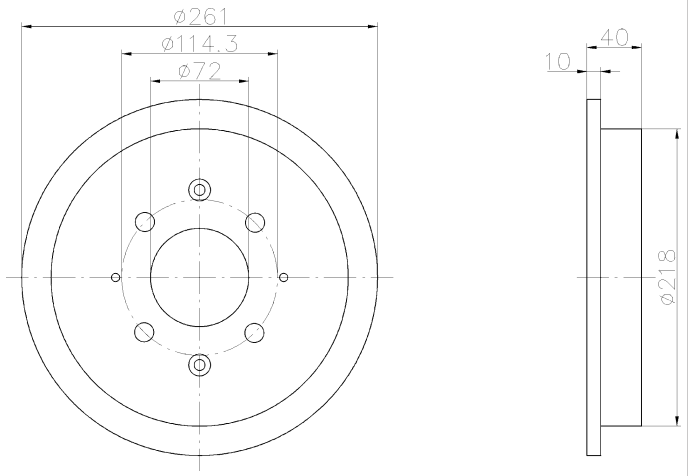

Illustrations

92104400

22.4

ASIA MOTORS, KIA

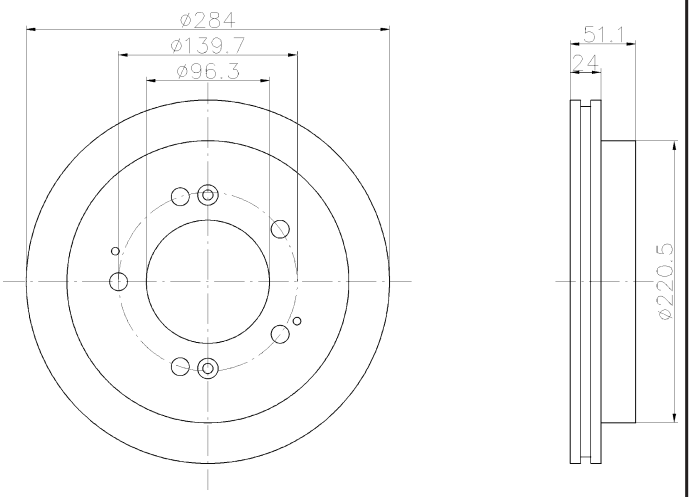

92104500

18

SUZUKI

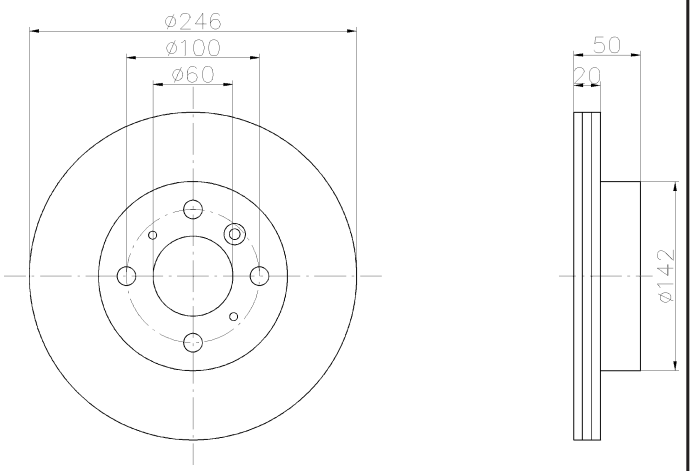

92105803

7 PRO

AUDI, SKODA, VOLKSWAGEN

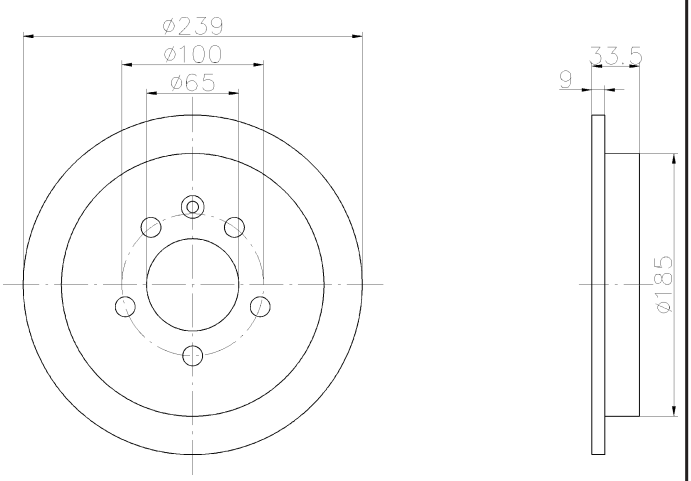

92105903

22.4 PRO

MERCEDES-BENZ

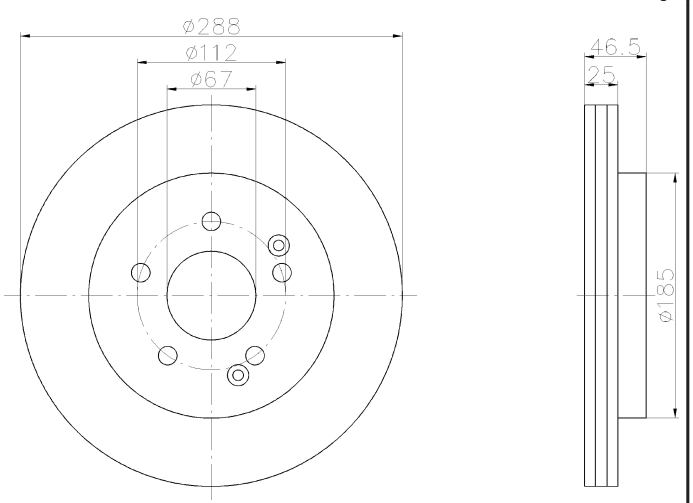

92106003

25.4 PRO

CHRYSLER, MERCEDES-BENZ

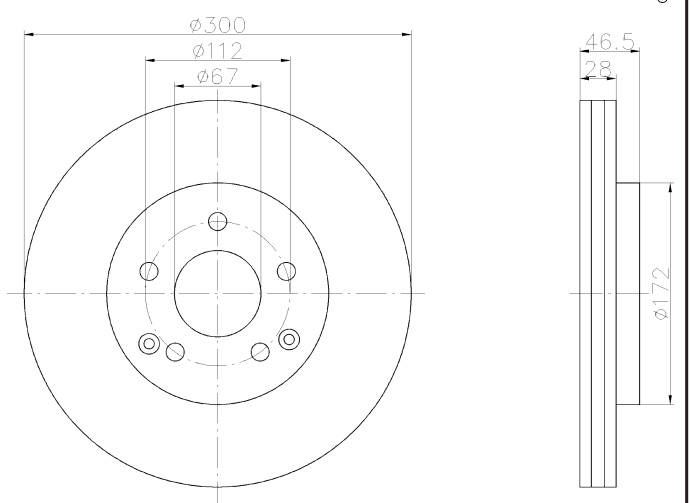

92106005

25.4 PRO

CHRYSLER, MERCEDES-BENZ

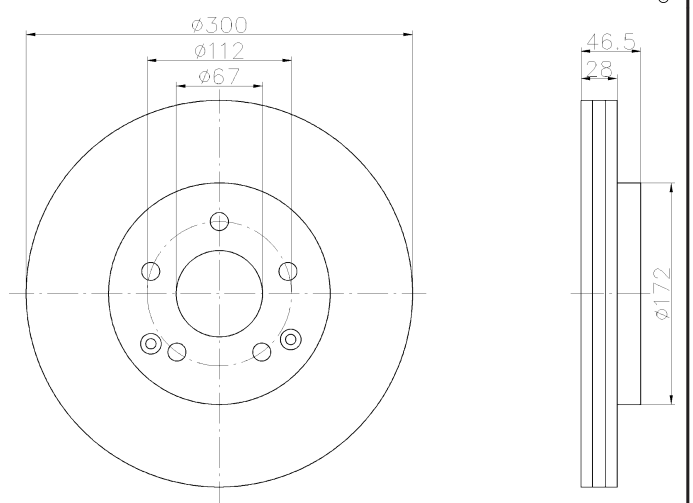

92106103

23 PRO

AUDI, SEAT, SKODA, VOLKSWAGEN, VOLKSWAGEN (SVW)

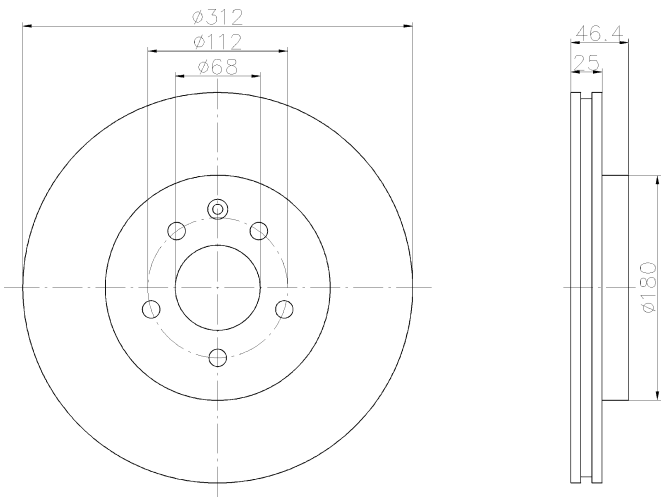

92106105

23 PRO

AUDI, SEAT, SKODA, VOLKSWAGEN, VOLKSWAGEN (SVW)

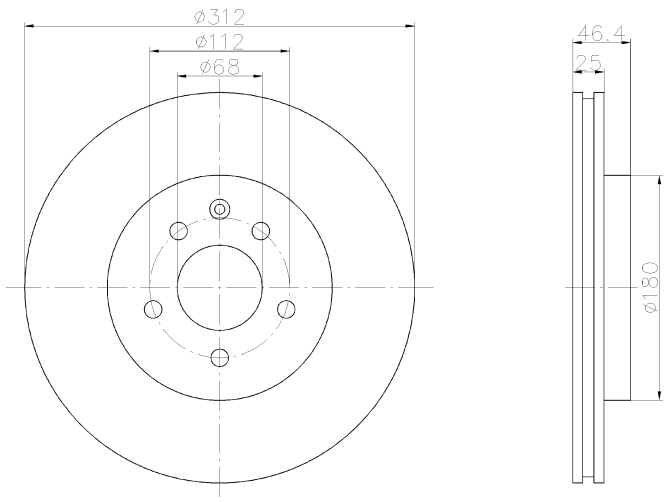

92106203

8 PRO

AUDI, SEAT

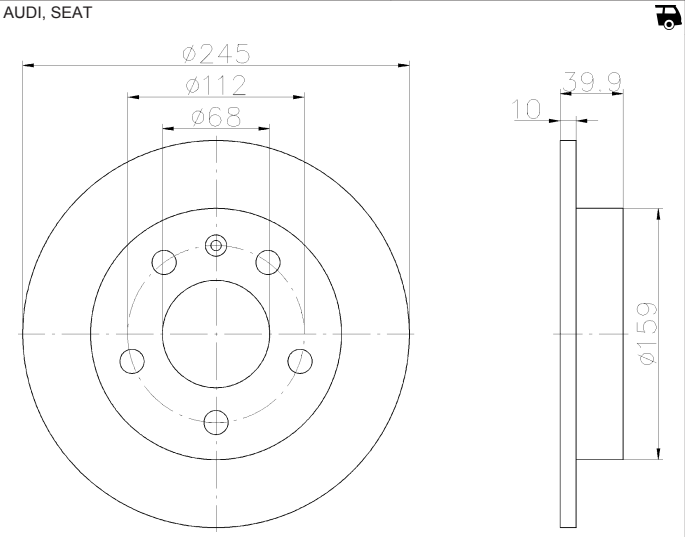

92106303

10 PRO

AUDI, AUDI (FAW), SEAT

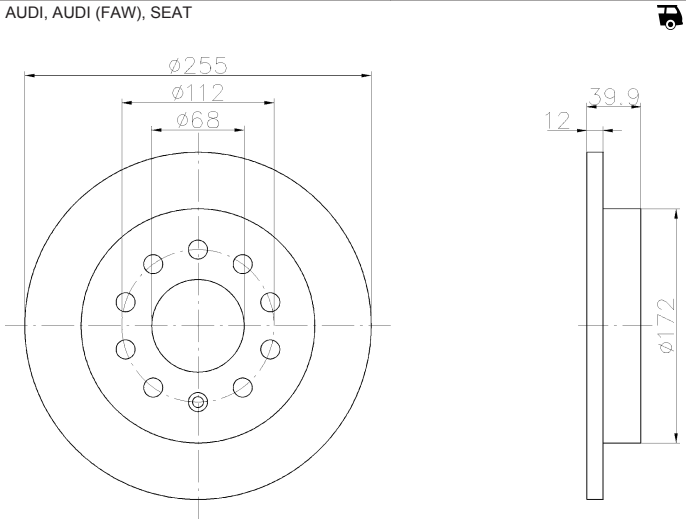

92106403

13 PRO

AUDI, VOLKSWAGEN

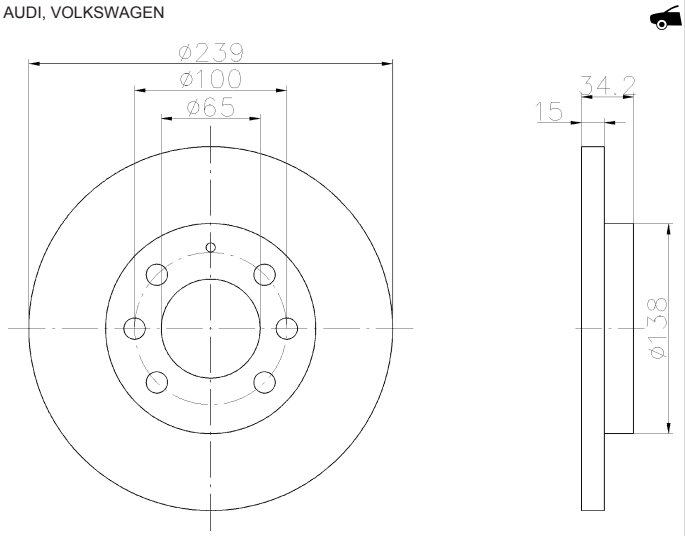

92106603

22 PRO

AUDI, SEAT, SKODA, SKODA (SVW), VOLKSWAGEN, VOLKSWAGEN (FAW)

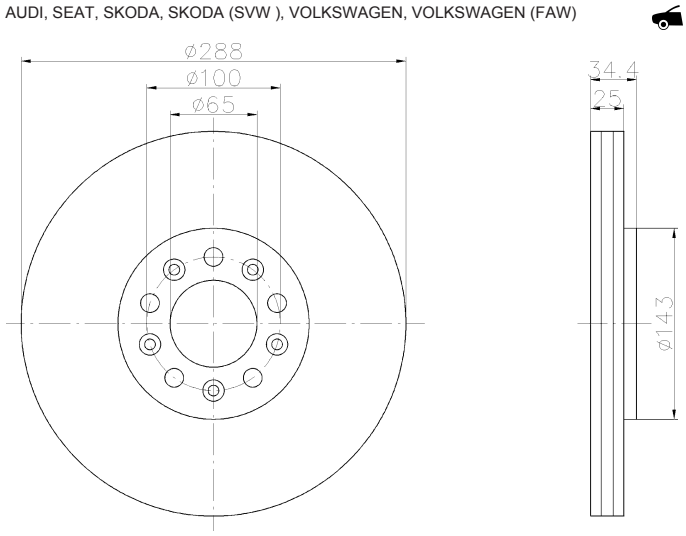

92106703

28 PRO

AUDI, SEAT

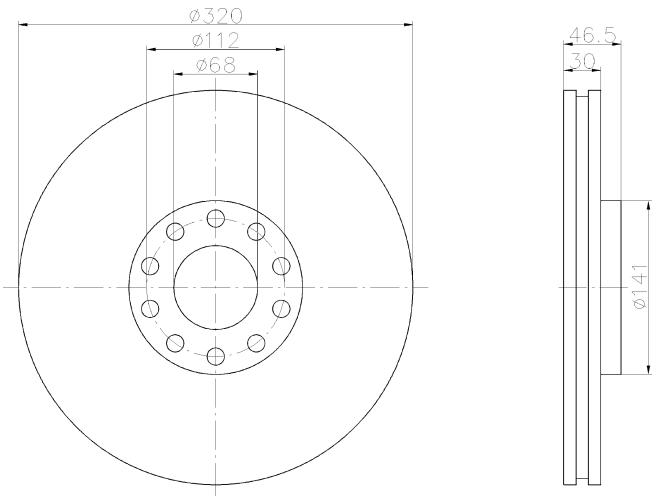

92106705

28 PRO

AUDI, SEAT

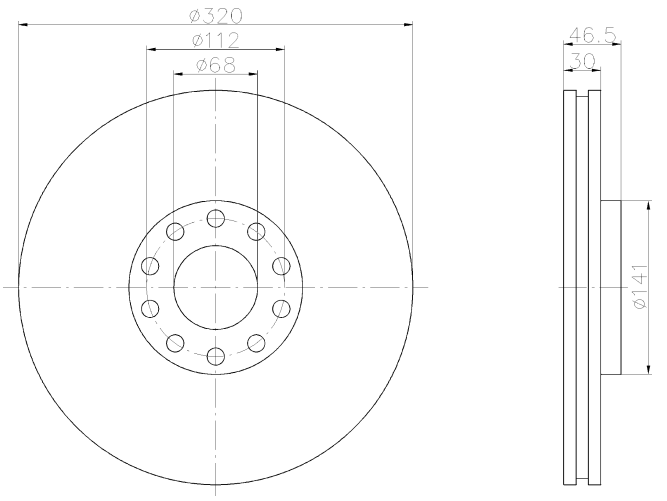

92106803

16 PRO

SKODA, SKODA (SVW), VOLKSWAGEN

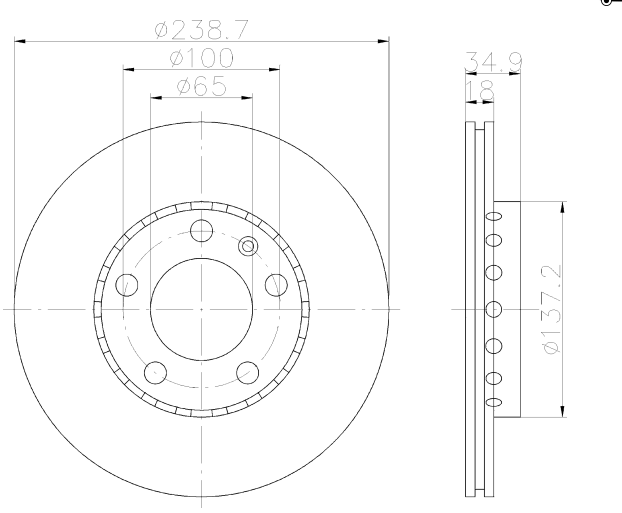

92106900

23

BMW

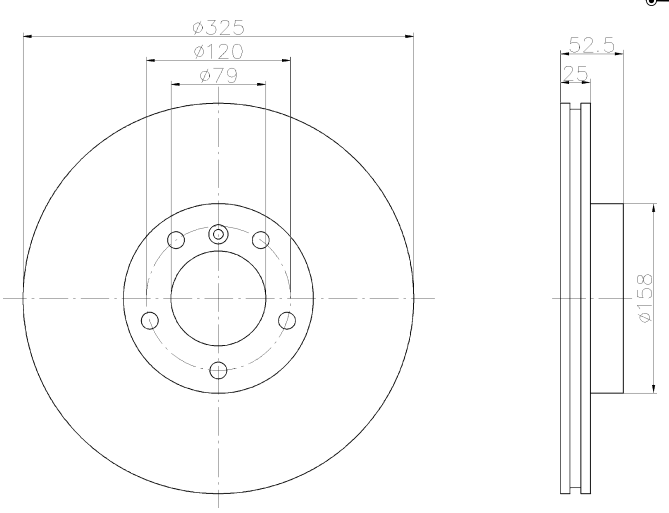

92106903

23 PRO

BMW

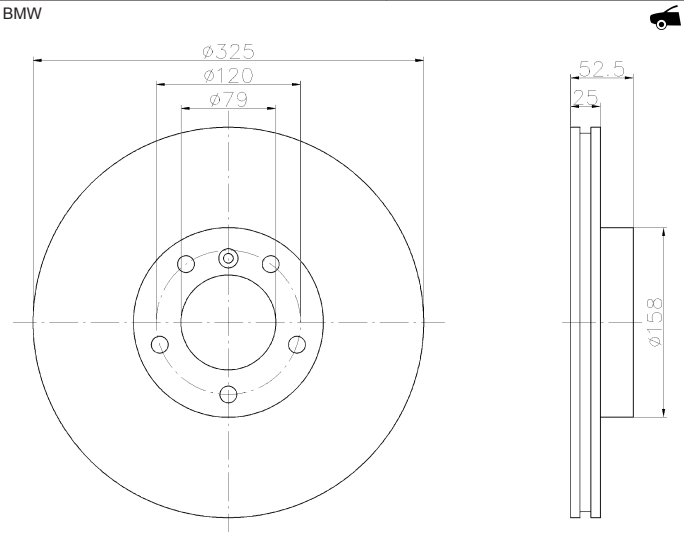

92106905

23 PRO

BMW

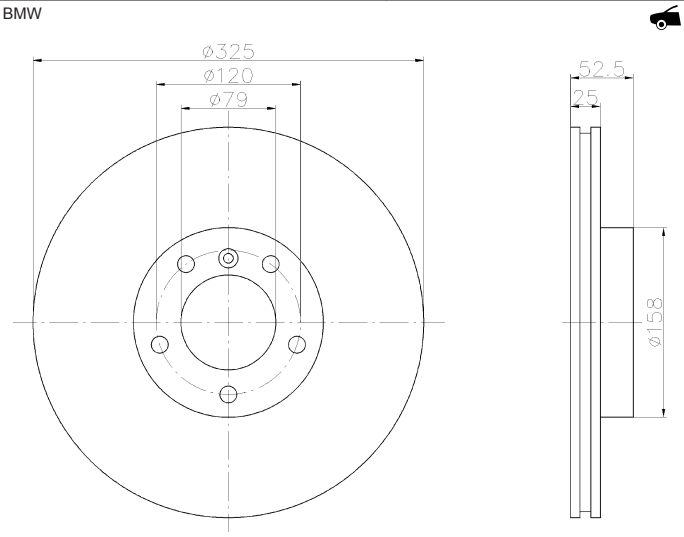

92107003

20.4 PRO

BMW

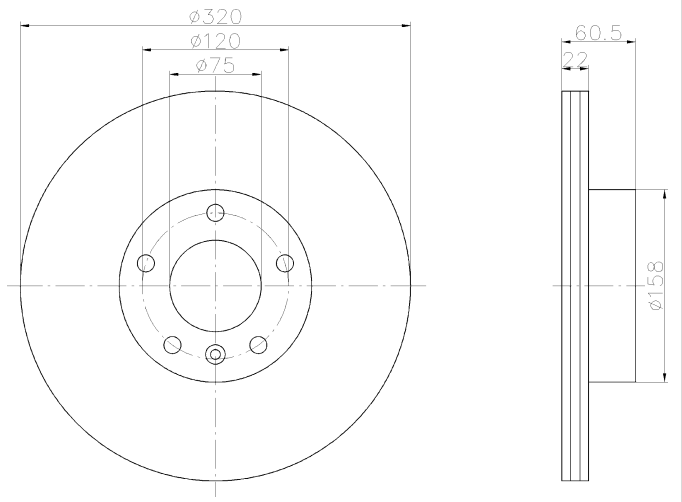

92107100

28.4

ALPINA, BMW

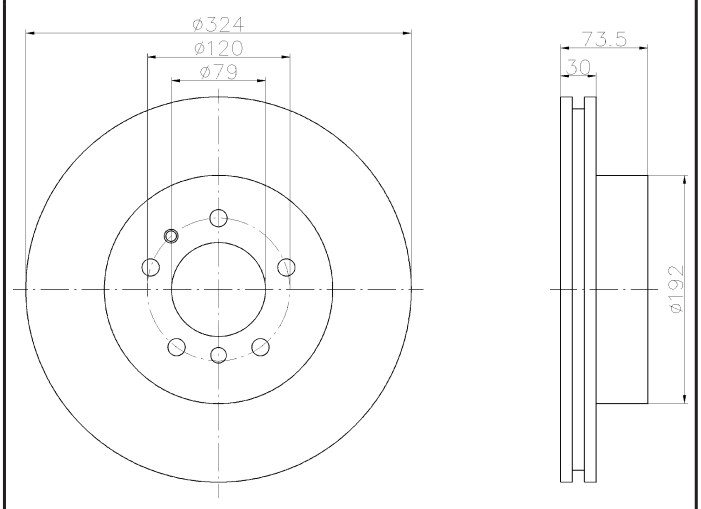

92107105

28.4 PRO

ALPINA, BMW

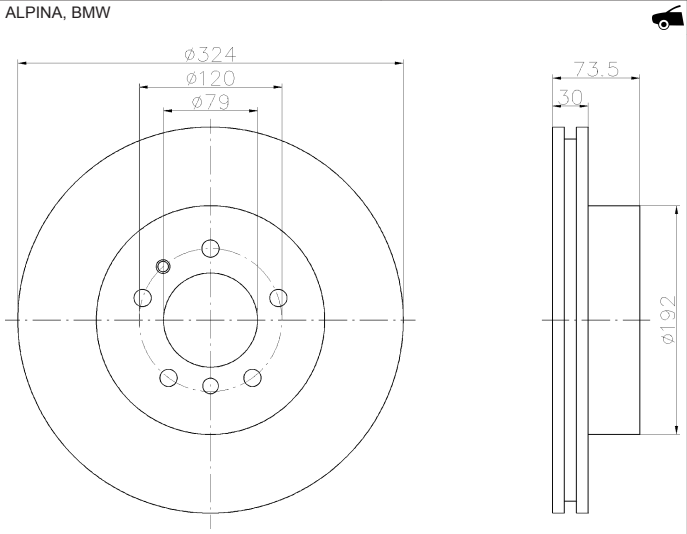

92107203

28.4 PRO

BMW

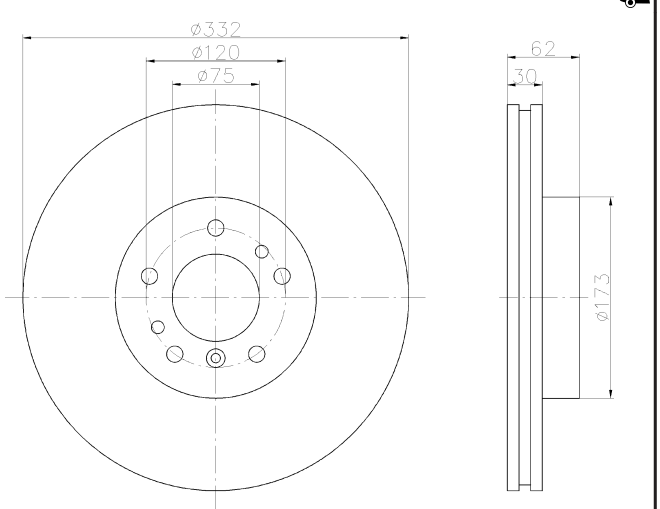

92107303

28.4 PRO

BMW

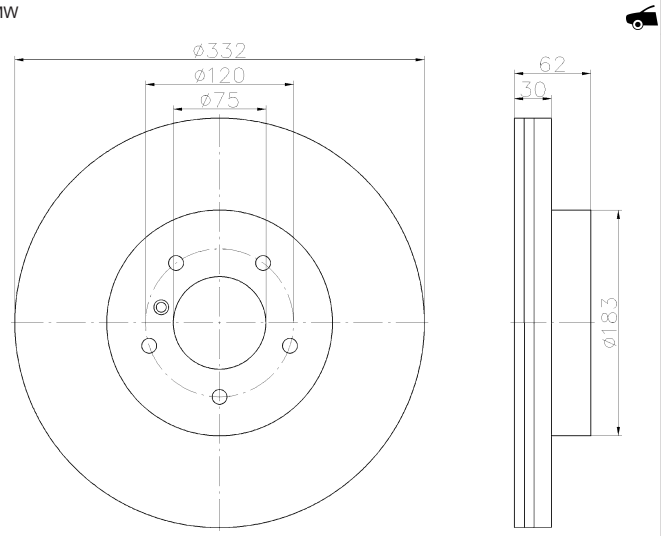

92107403

10.4 PRO

BMW

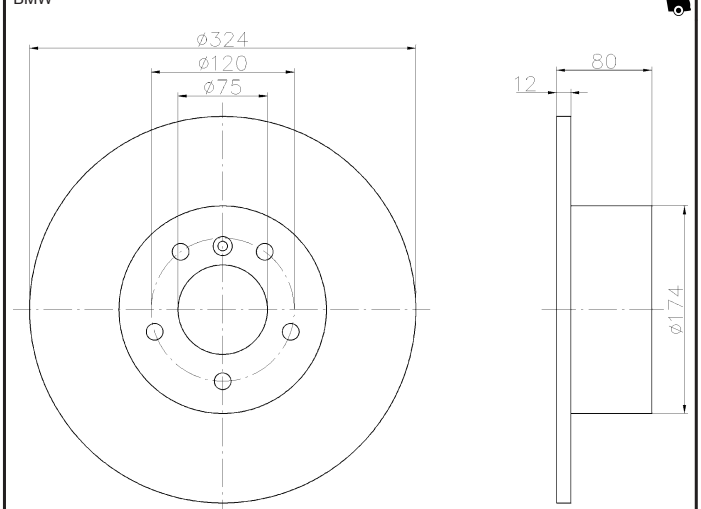

92107500

19

MINI

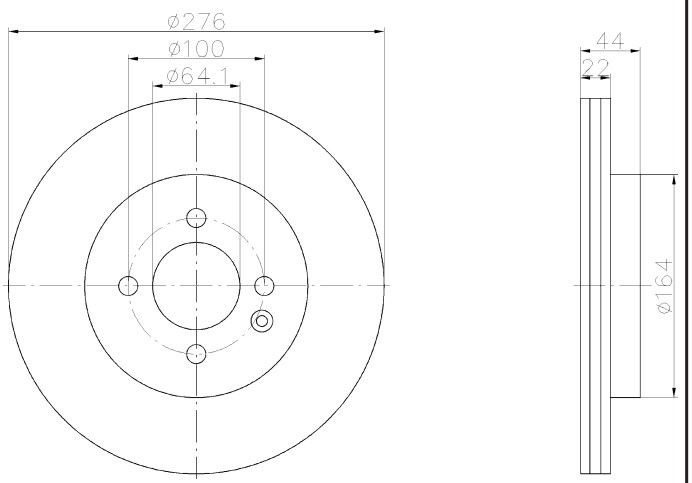

92107503

PRO

19

MINI

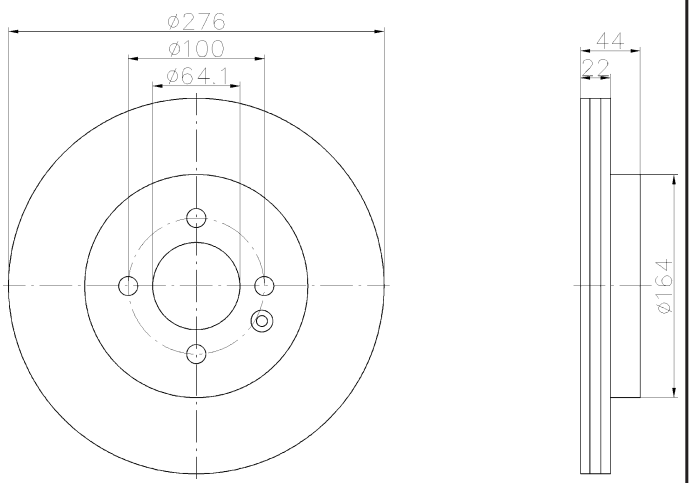

92107603

PRO

7

MINI

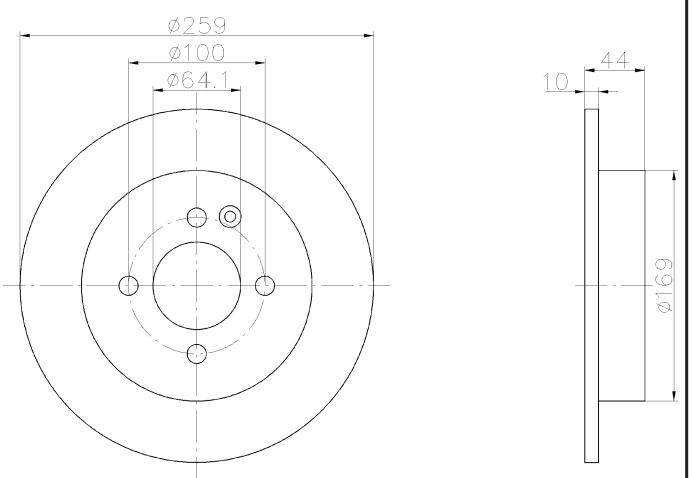

92107703

PRO

24.2

ALFA ROMEO, CHRYSLER, FIAT, LANCIA

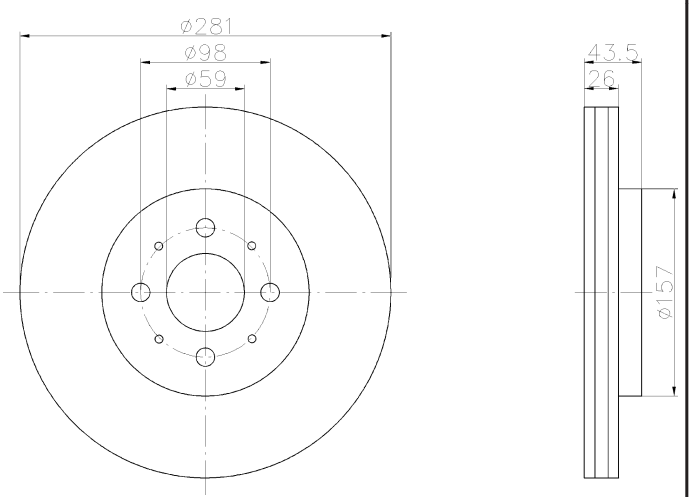

92107800

26

CITROËN

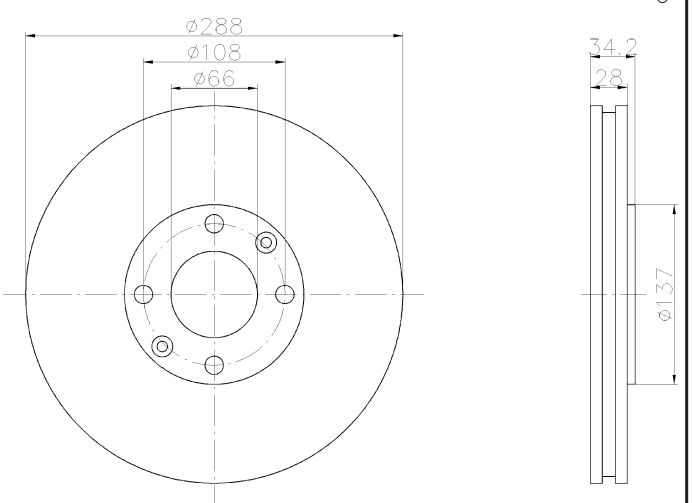

92107900

12

CITROËN

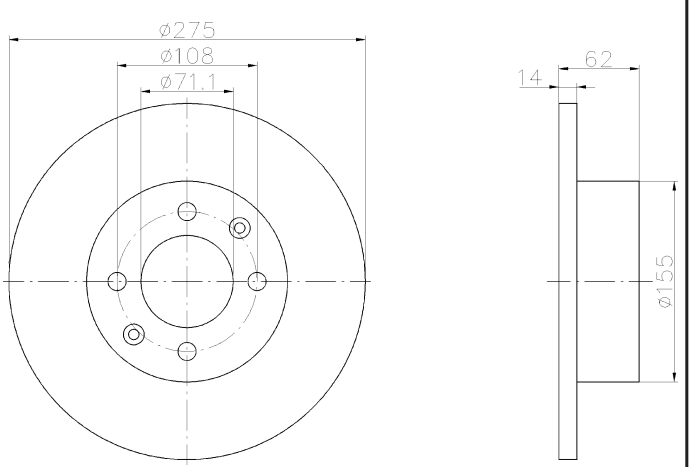

92108000

26

CITROËN

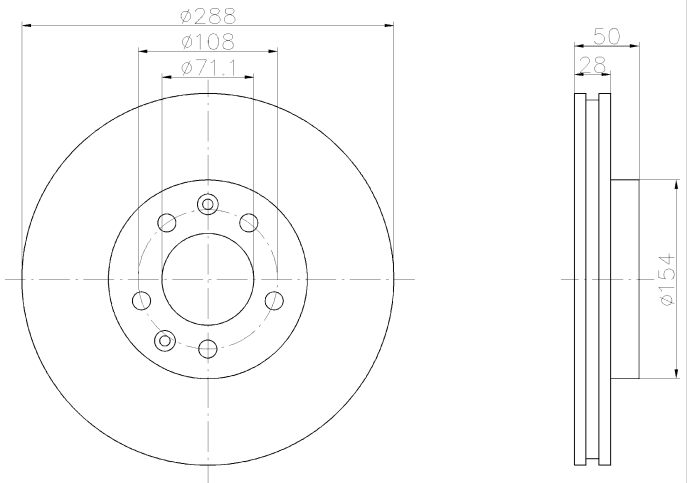

92108100

30

LEXUS, TOYOTA

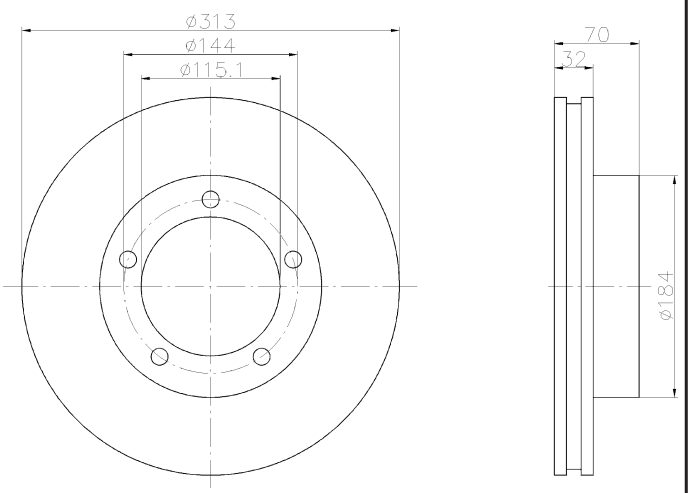

92108103

30 PRO

LEXUS, TOYOTA, TOYOTA (FAW)

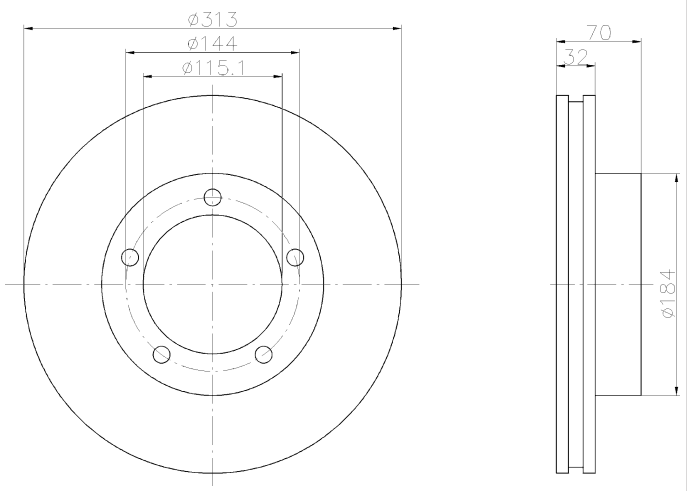

92108200

26.5

CHRYSLER, DODGE

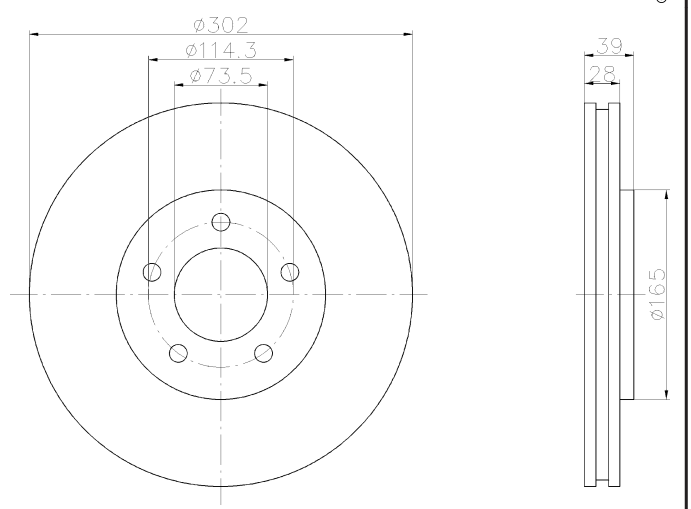

92108300

25.3

CHRYSLER, DODGE

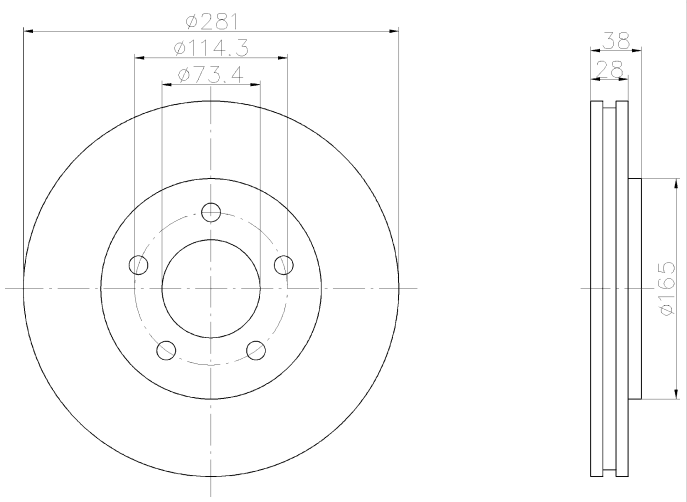

92108400

11.3

CHRYSLER, DODGE

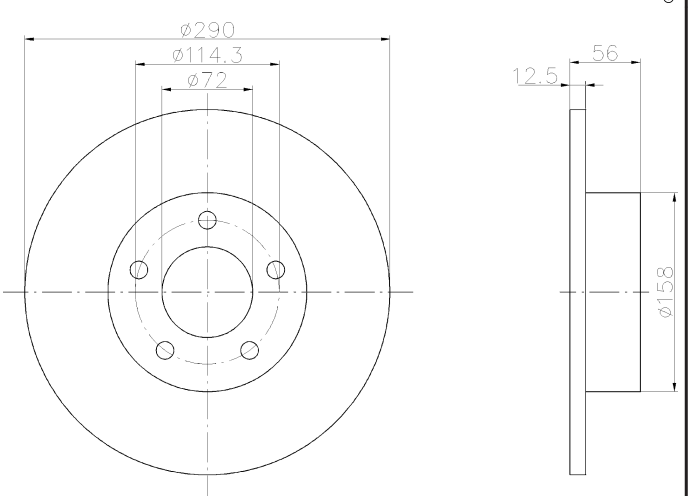

92108500

21.4

CHRYSLER

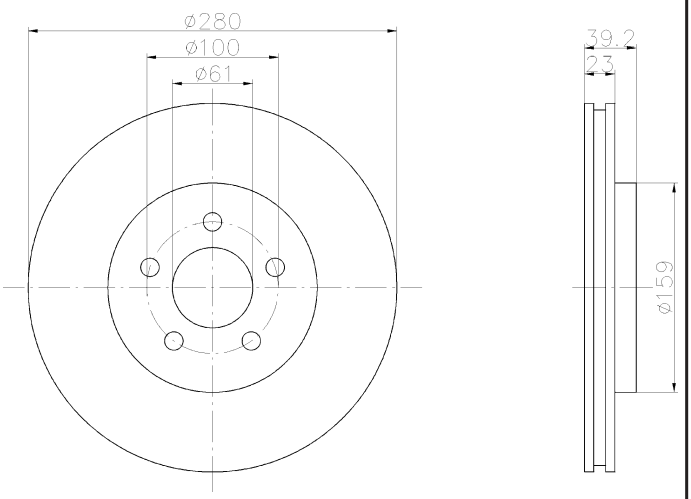

92108503

21.4 PRO

CHRYSLER

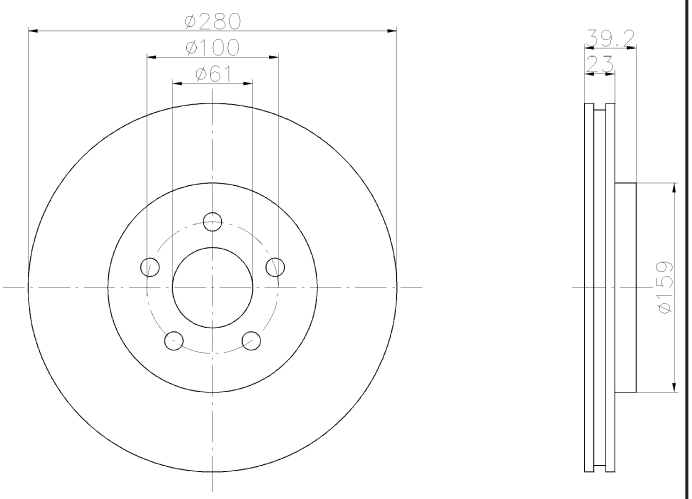

92108600

7.3

CHRYSLER, DODGE, PLYMOUTH

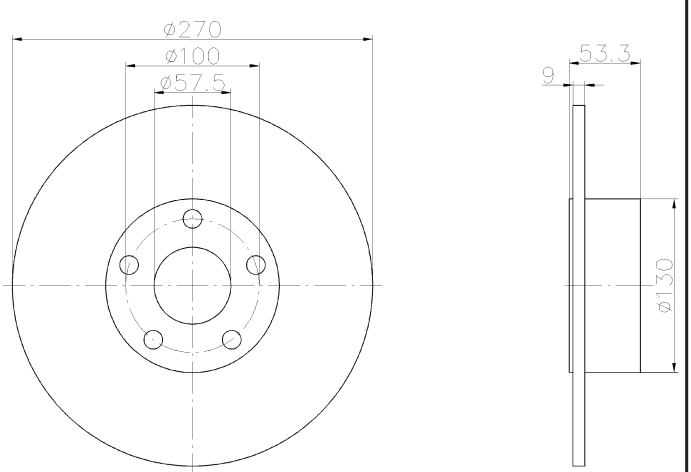

92108700

22.4

CHRYSLER, DODGE, PLYMOUTH

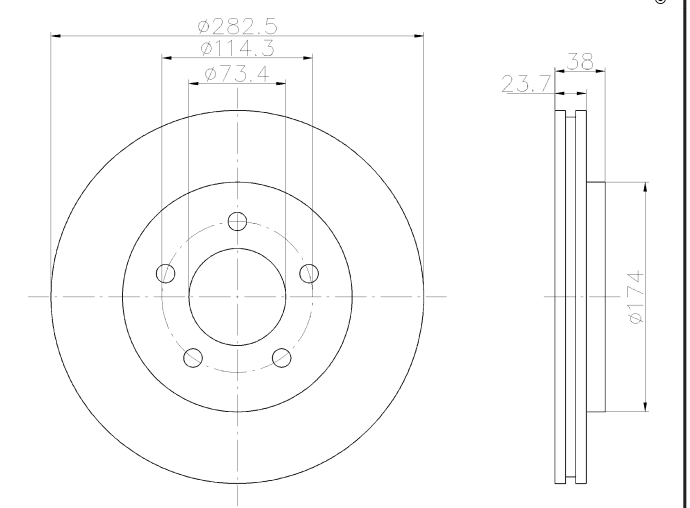

92108800

30

MERCEDES-BENZ

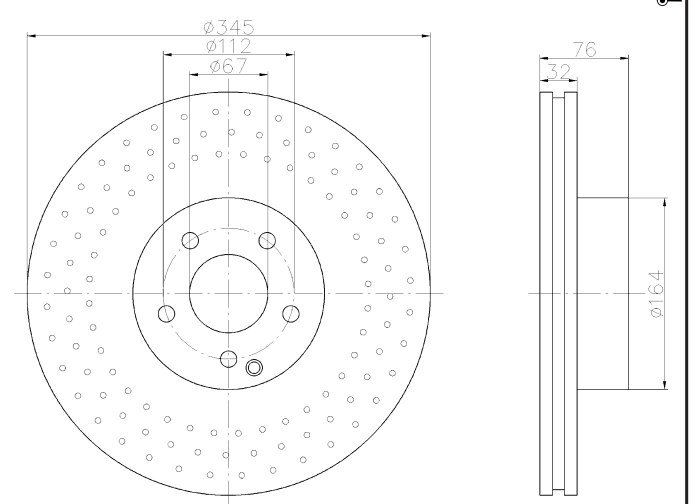

92108900

30

MERCEDES-BENZ

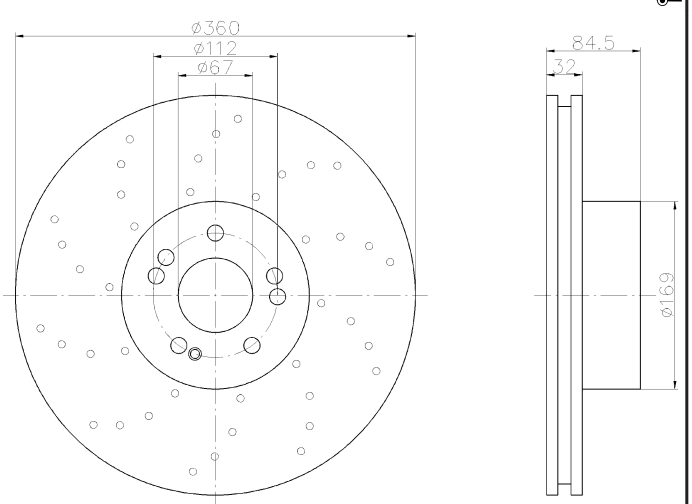

92109000

19.4

MERCEDES-BENZ

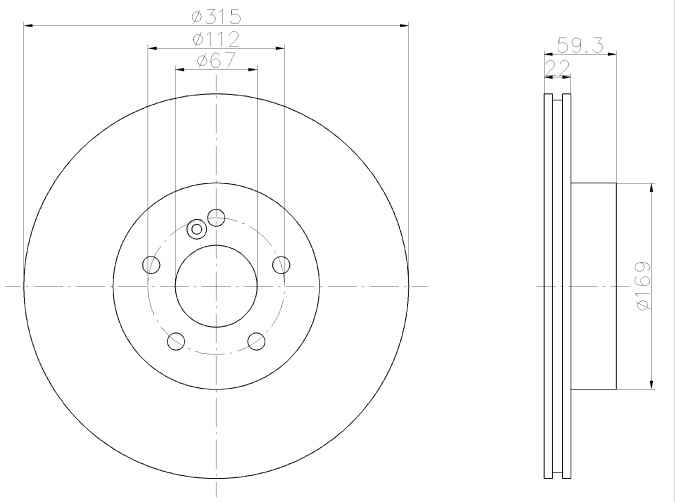

92109100

30

LEXUS, TOYOTA

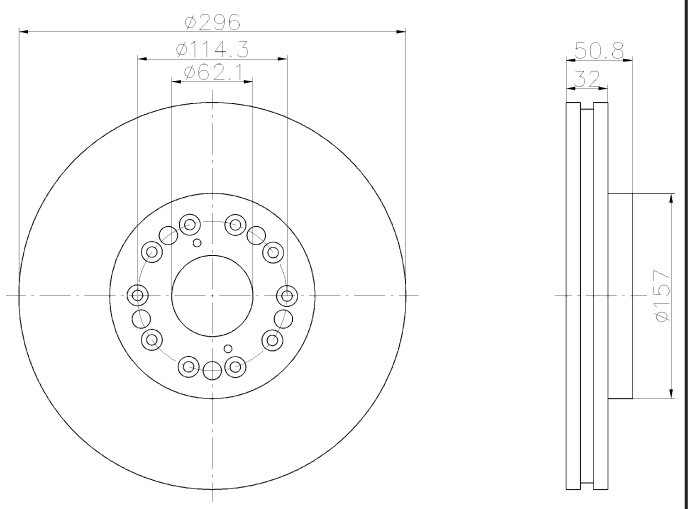

92109200

18

LADA

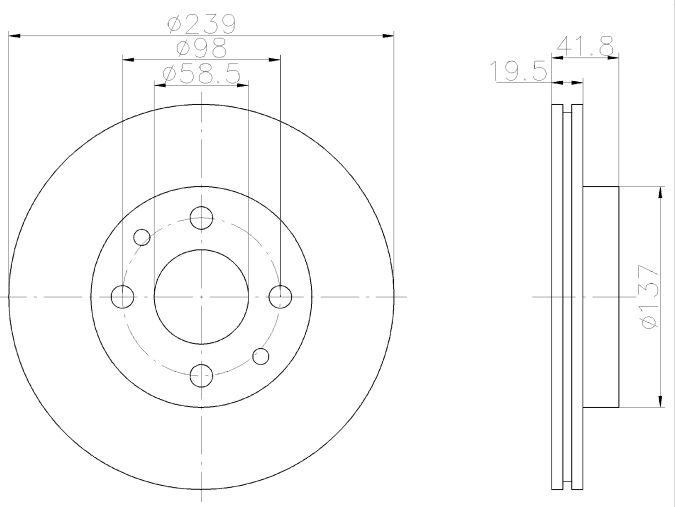

92109300

20

NISSAN

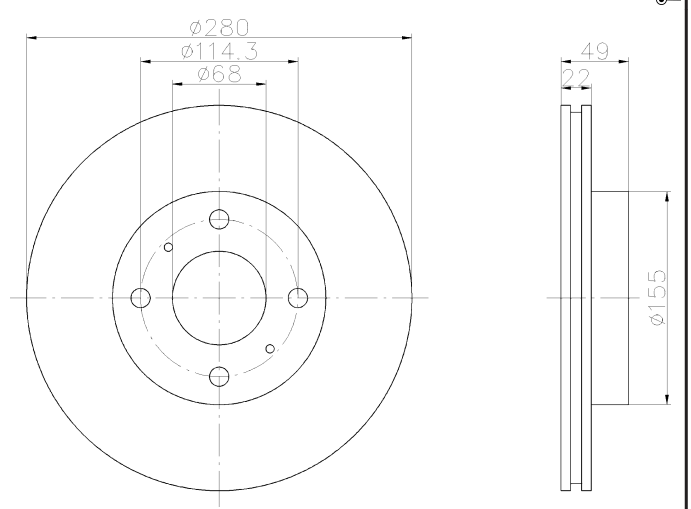

92109403

26 PRO

INFINITI, NISSAN

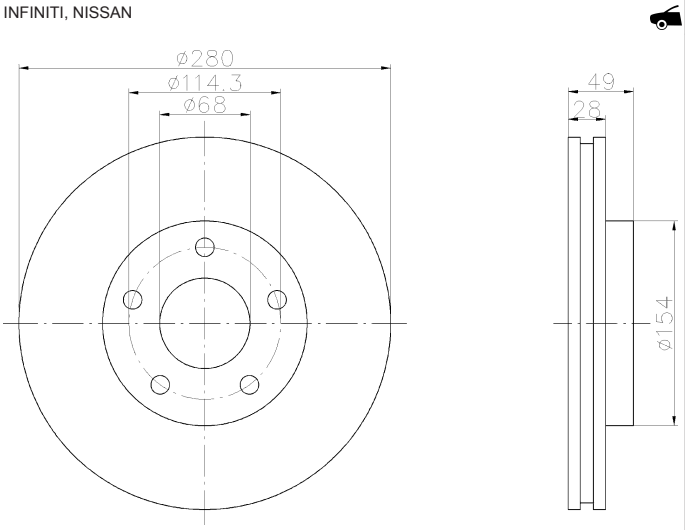

92109500

26

INFINITI, NISSAN

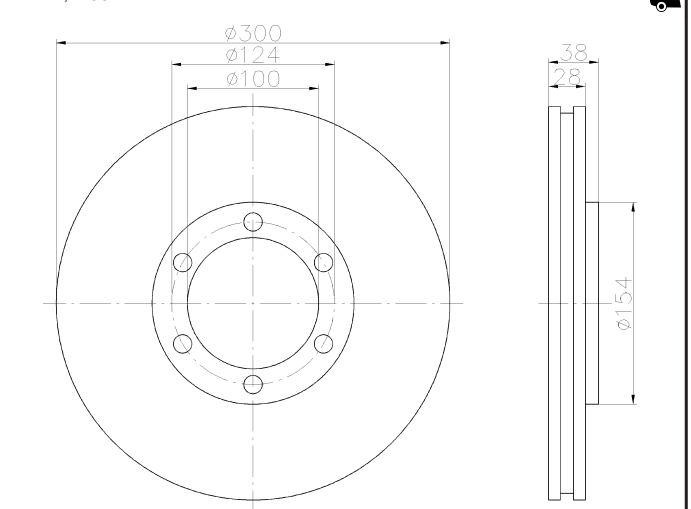

92109603

22 PRO

FORD, FORD AUSTRALIA, JAGUAR

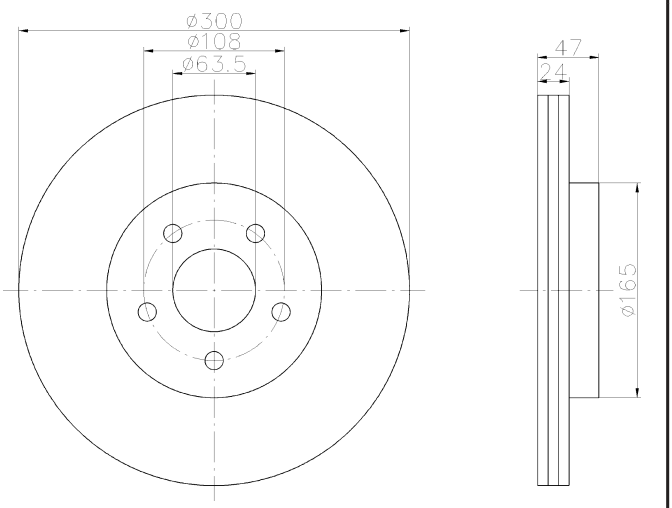

92109703

10 PRO

FORD, FORD (CHANGAN), FORD AUSTRALIA, JAGUAR

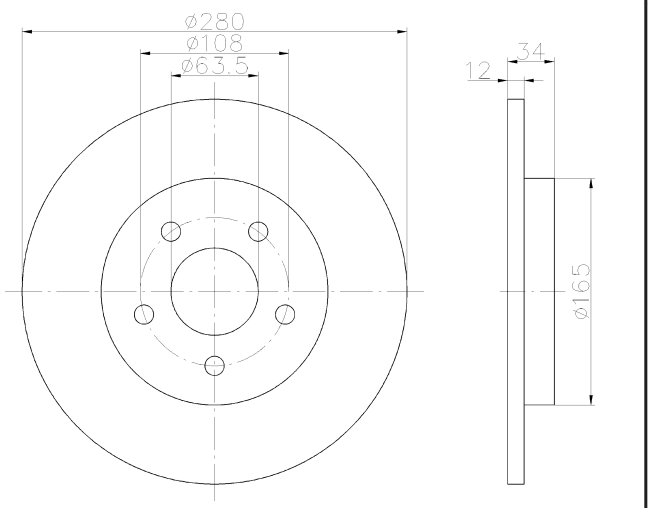

92109803

22 PRO

FORD, SEAT, VOLKSWAGEN

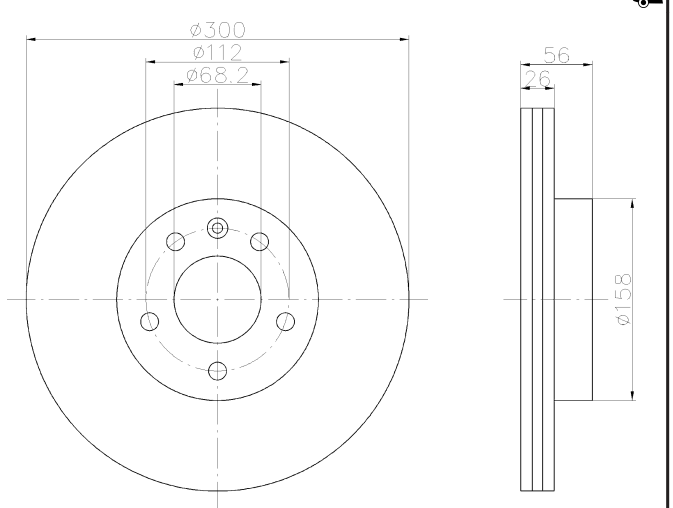

92109900

22

FORD, SEAT, VOLKSWAGEN

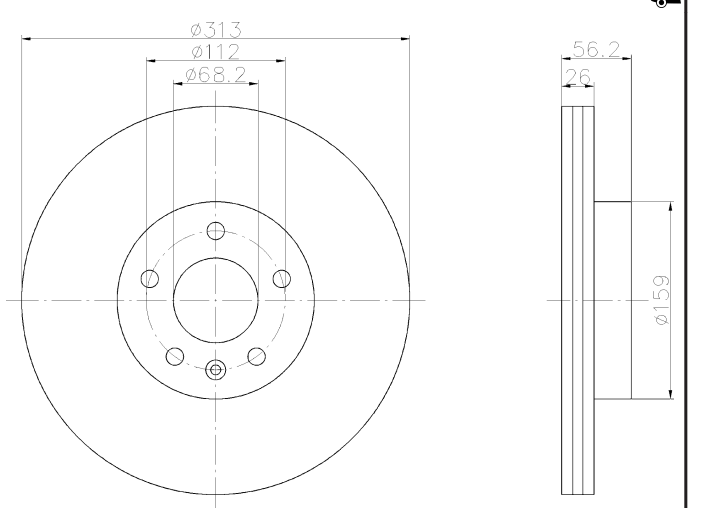

92109903

22 PRO

FORD, SEAT, VOLKSWAGEN

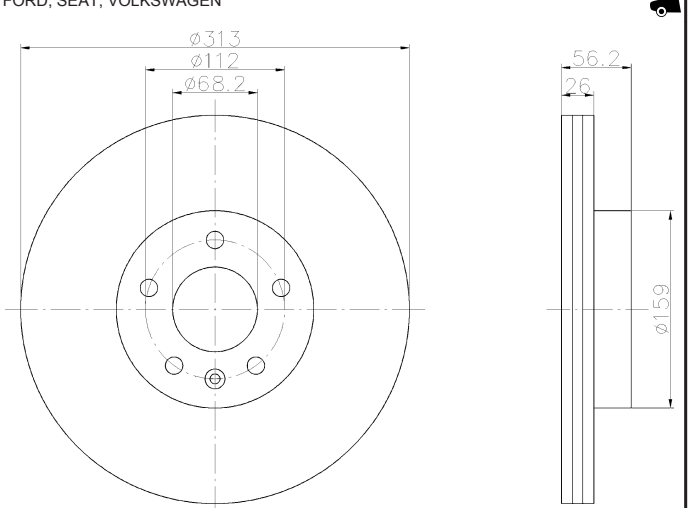

92110003

22.1 PRO

FORD

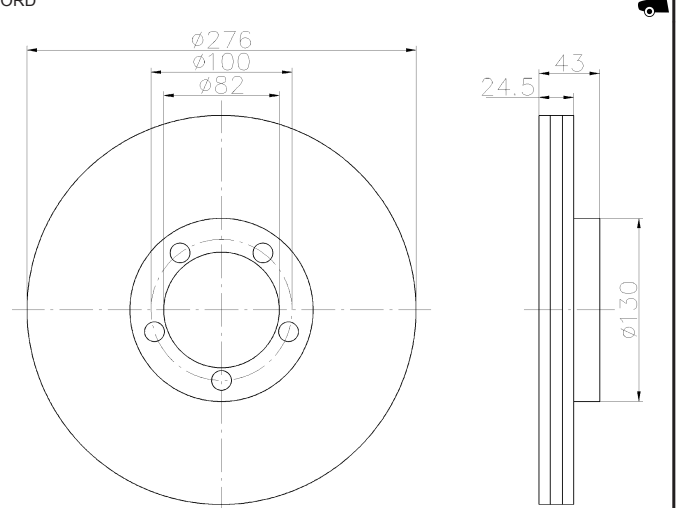

92110100

23

HONDA

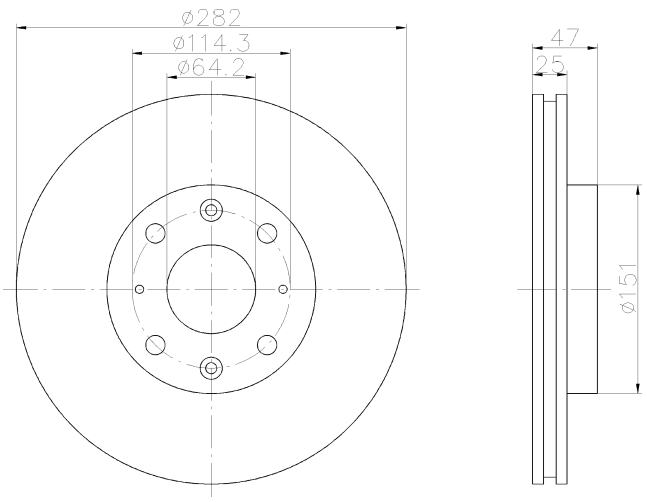

92110200

26

ACURA, HONDA

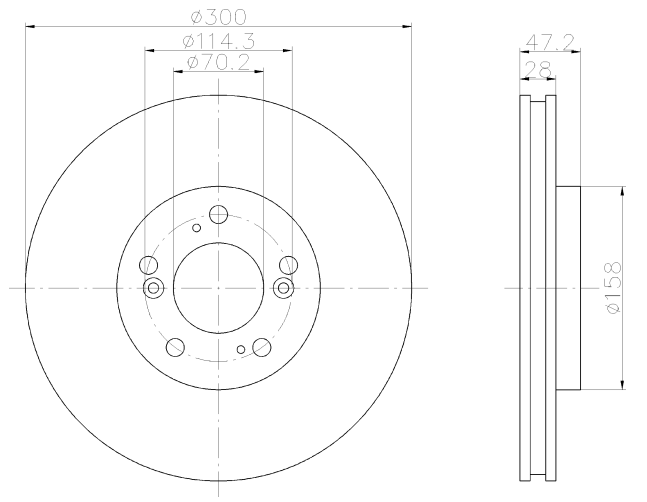

92110300

19

HONDA

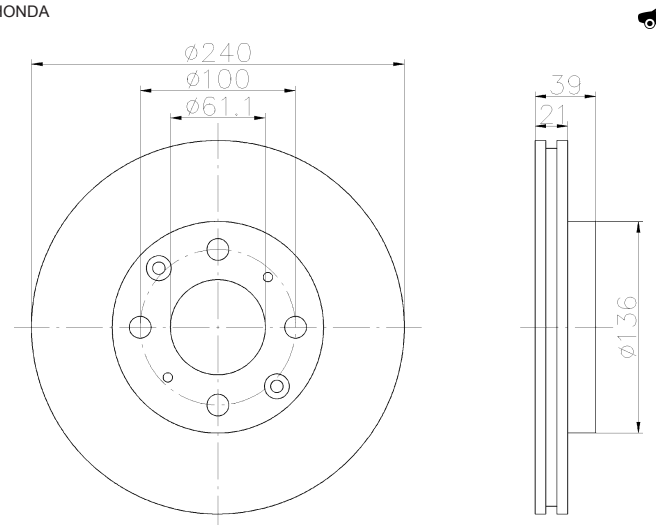

92110400

22

MAZDA

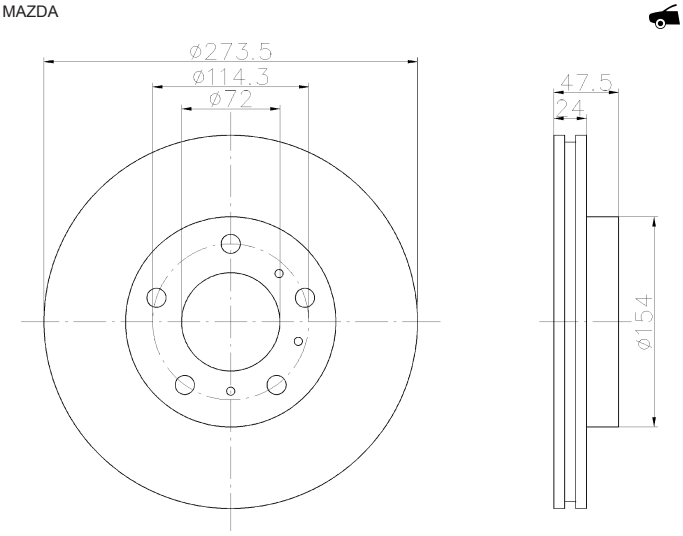

92110500

22.4

MITSUBISHI

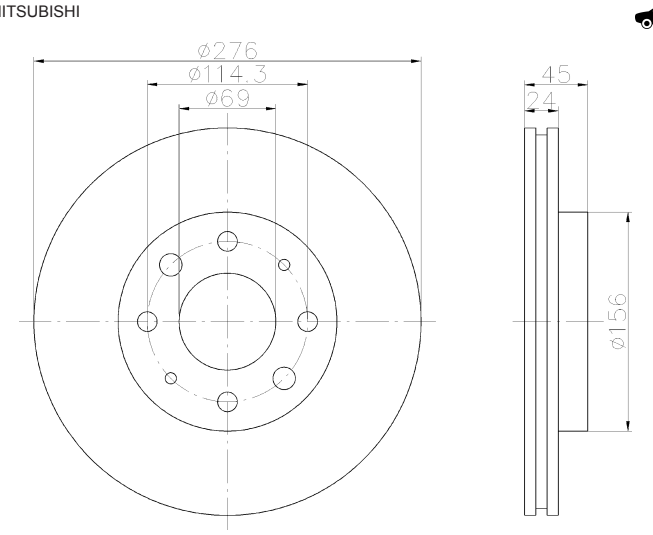

92110600

22.4

MITSUBISHI

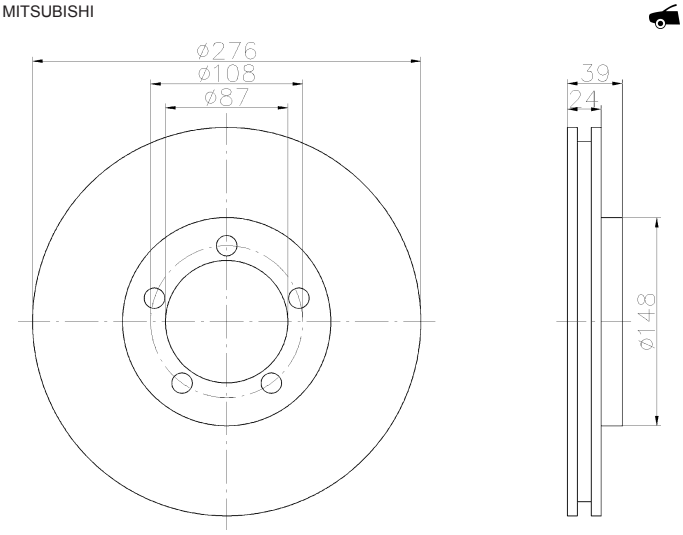

92110700

22.4

MITSUBISHI

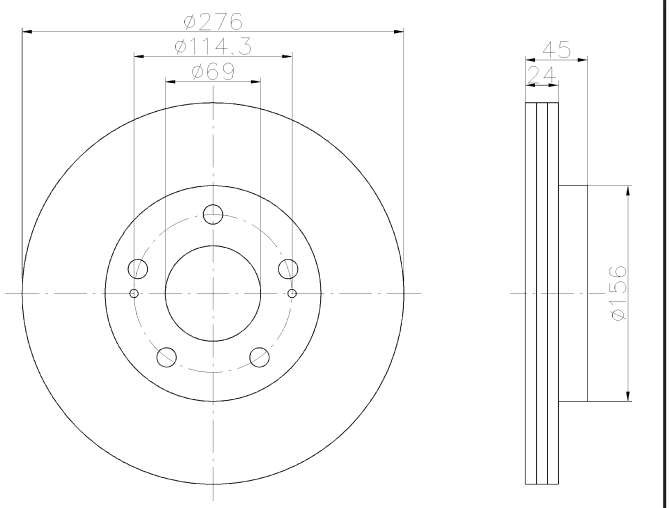

92110803

10 PRO

OPEL, SUZUKI, VAUXHALL

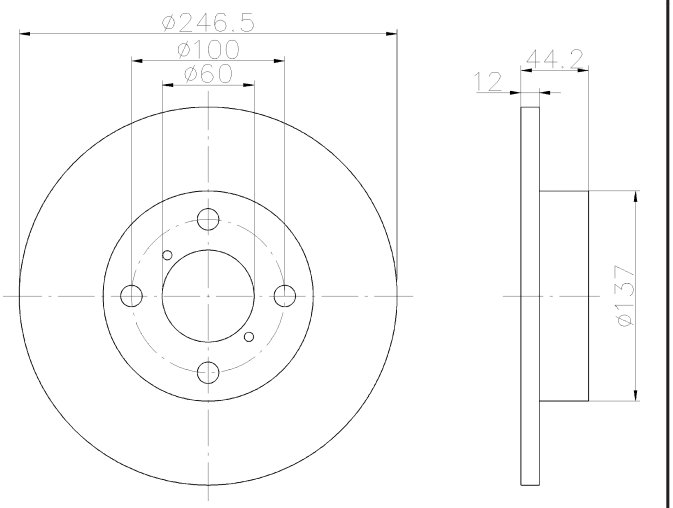

92110903

22 PRO

CHEVROLET, HOLDEN, OPEL, SAAB, VAUXHALL

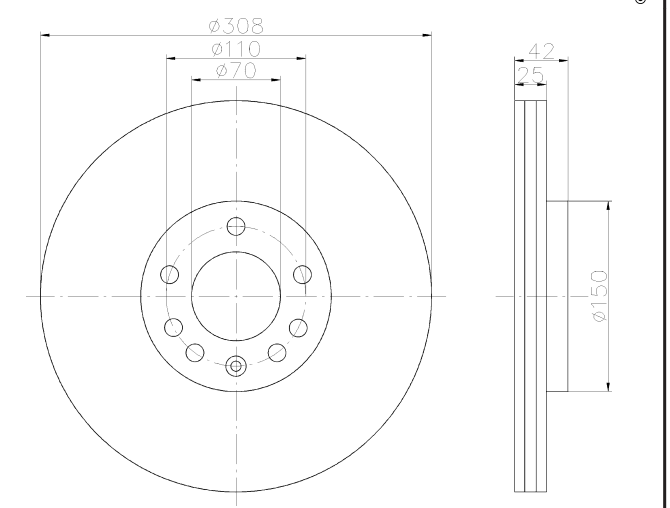

92111003

8.2 PRO

HOLDEN, OPEL, VAUXHALL

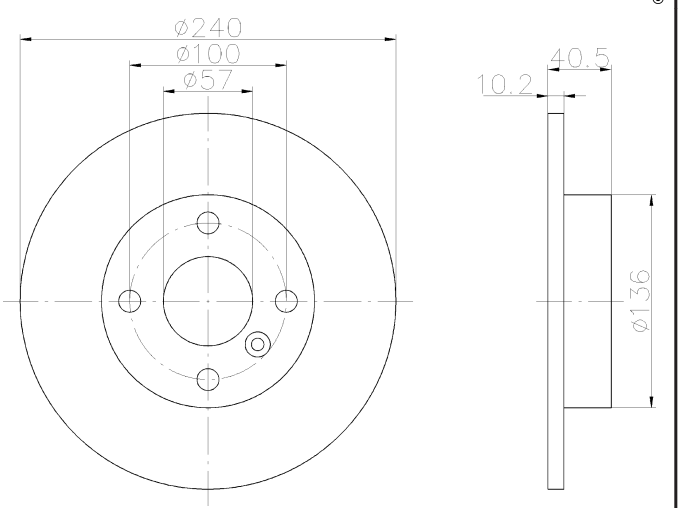

92111103

21 PRO

HOLDEN, OPEL, VAUXHALL

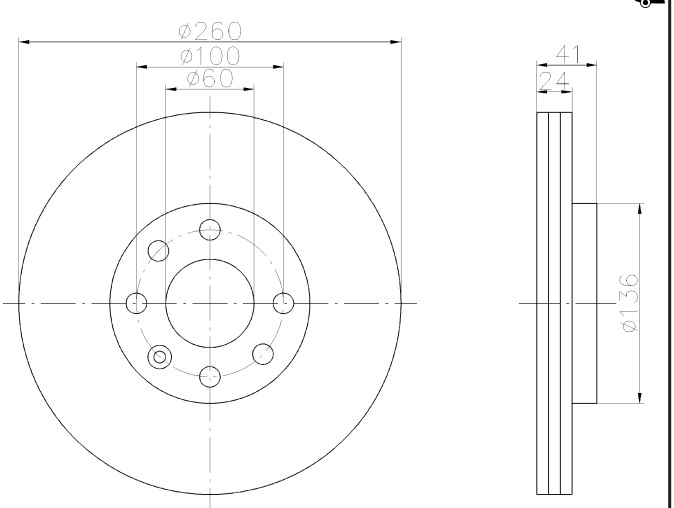

92111203

10.5 PRO

NISSAN, OPEL, RENAULT, VAUXHALL

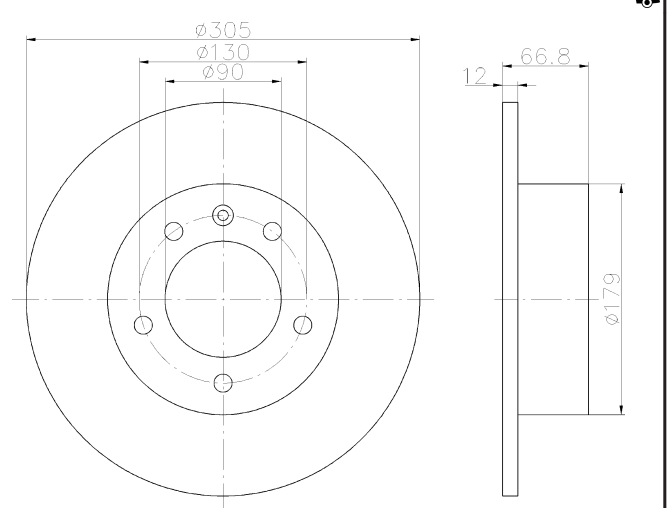

92111303

8 PRO

OPEL, VAUXHALL

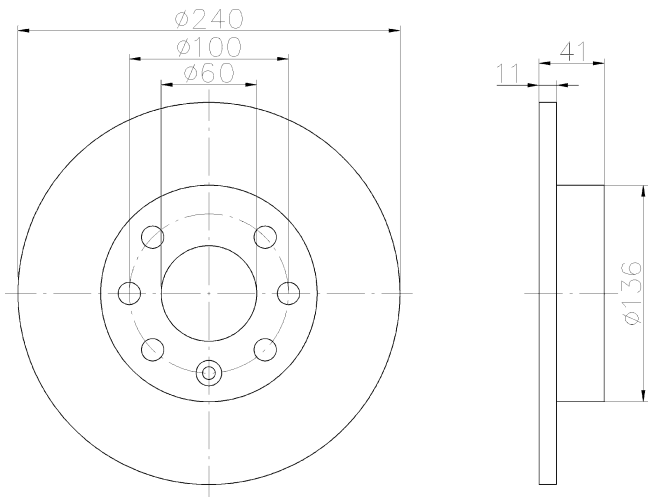

92111403

17 PRO

OPEL, VAUXHALL

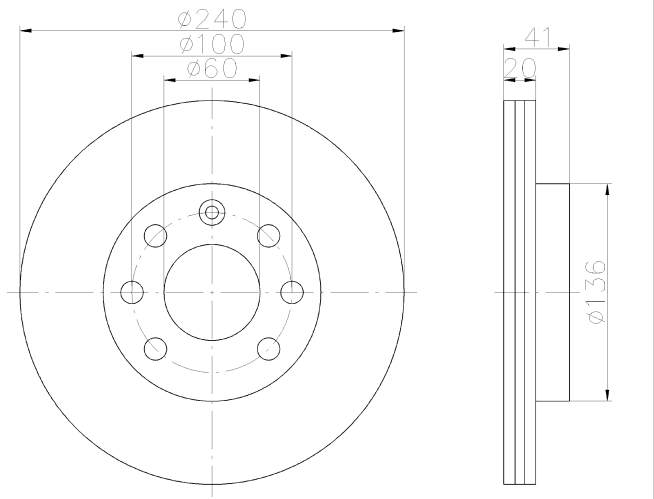

92111503

20 PRO

CITROËN, CITROËN (DF-PSA), MITSUBISHI (SOUEAST), NISSAN (DONGFENG), PEUGEOT, PEUGEOT (DF-PSA)

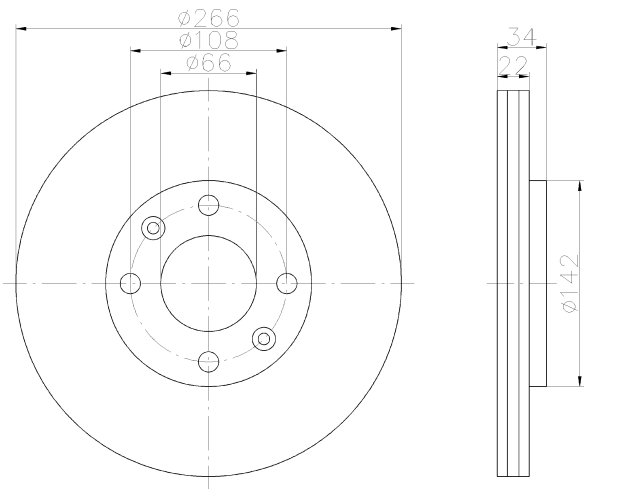

92111603

24 PRO

CITROËN, CITROËN (DF-PSA), MITSUBISHI (BJC), PEUGEOT, PEUGEOT (DF-PSA)

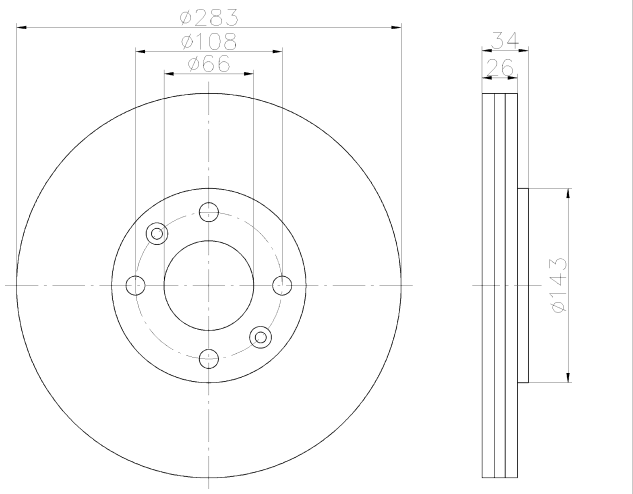

92111703

8 PRO

CITROËN, CITROËN (DF-PSA), NISSAN (DONGFENG), PEUGEOT

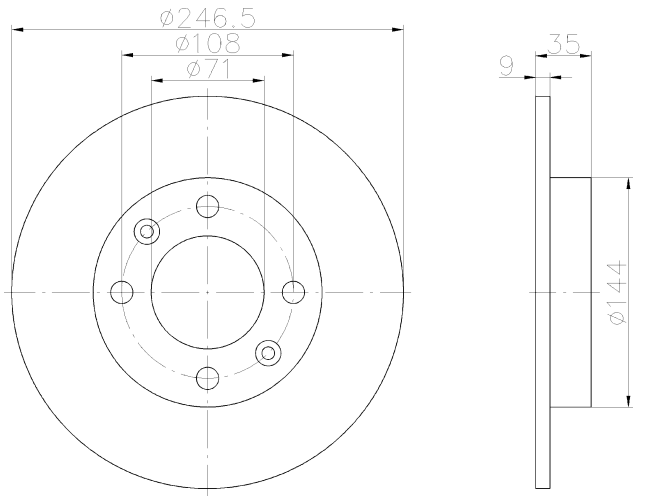

92111803

24 PRO

PEUGEOT

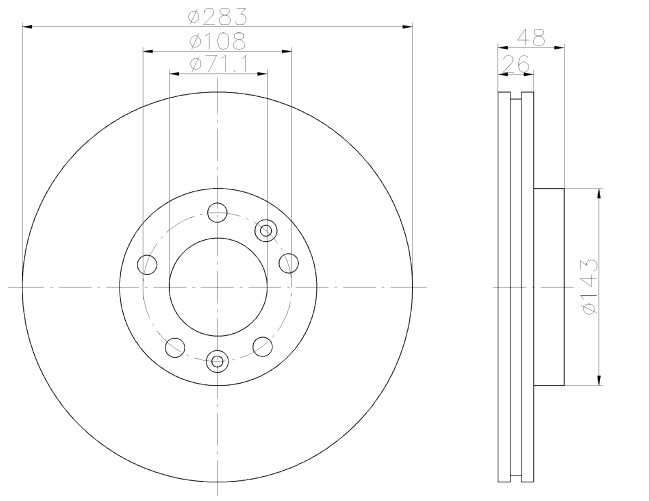

Illustrations

92111900

30

PEUGEOT

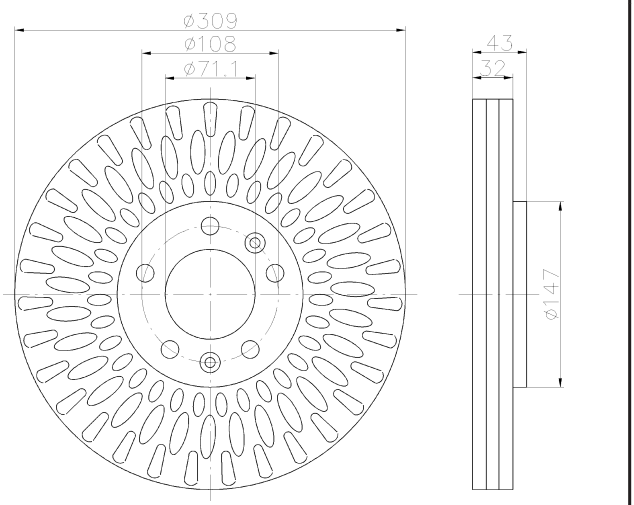

92112000

8

PEUGEOT

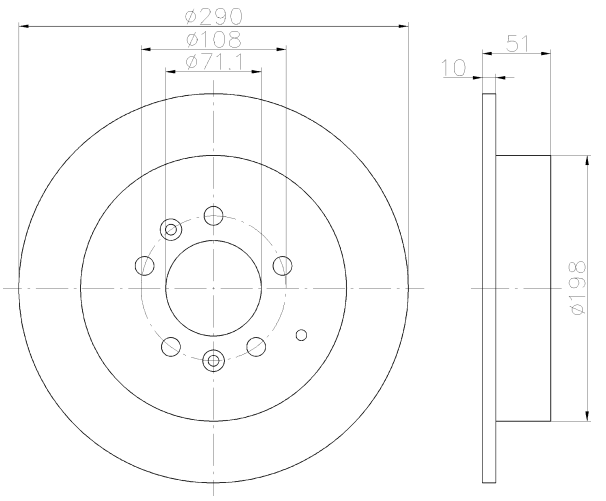

92112100

18.5

LADA

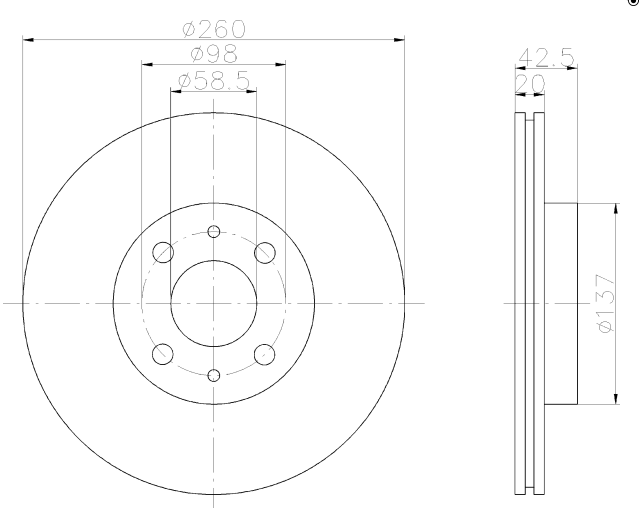

92112200

26

RENAULT

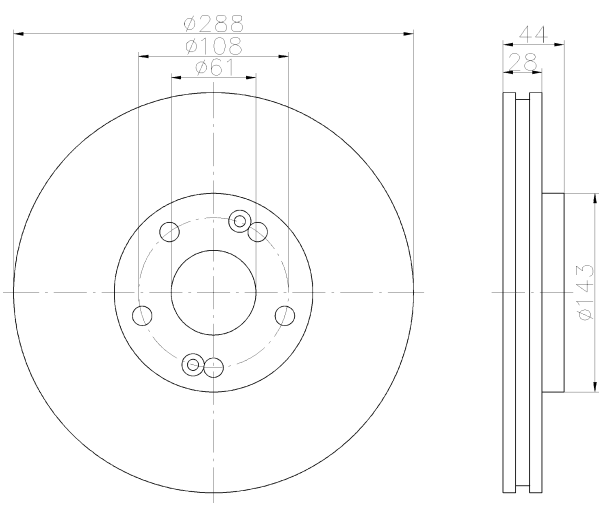

92112300

26

RENAULT

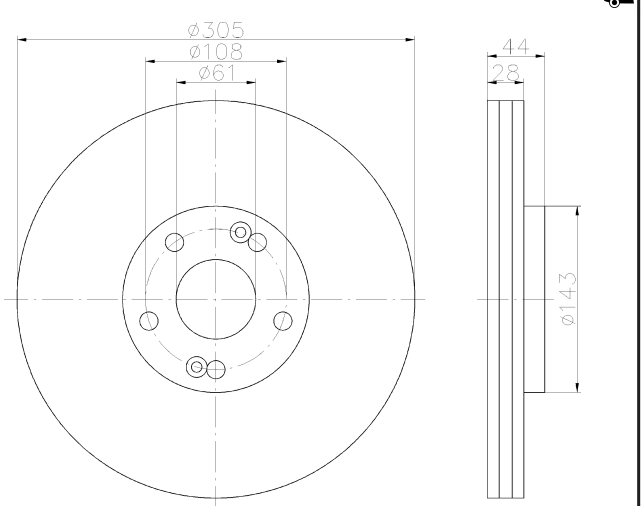

92112400

20.4

MITSUBISHI

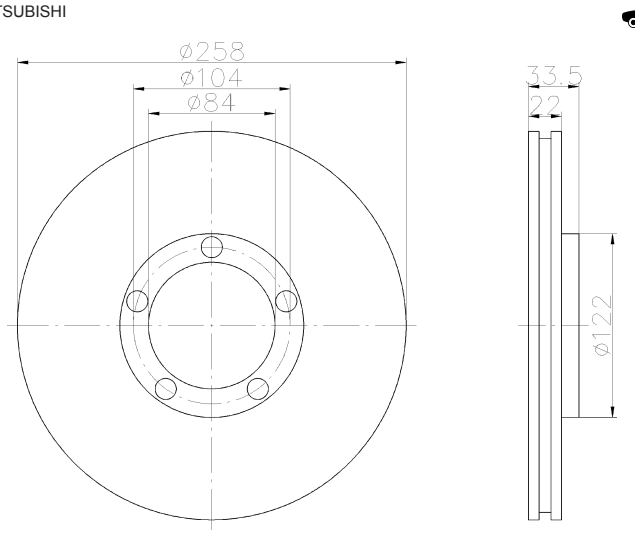

Illustrations

92112500

28

AUDI

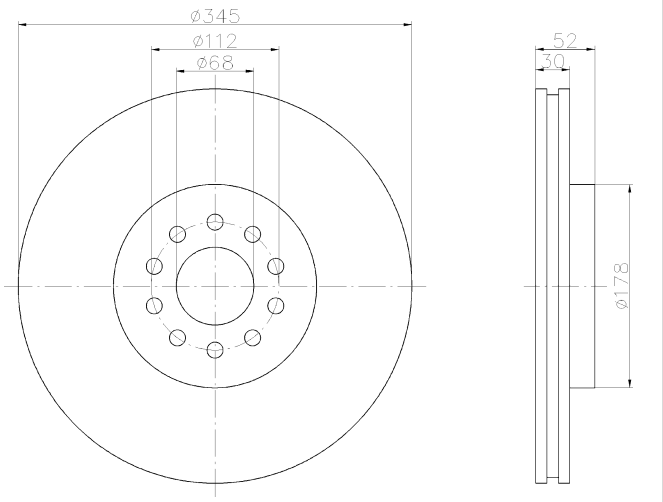

92112600

14.5

DAIHATSU, PIAGGIO

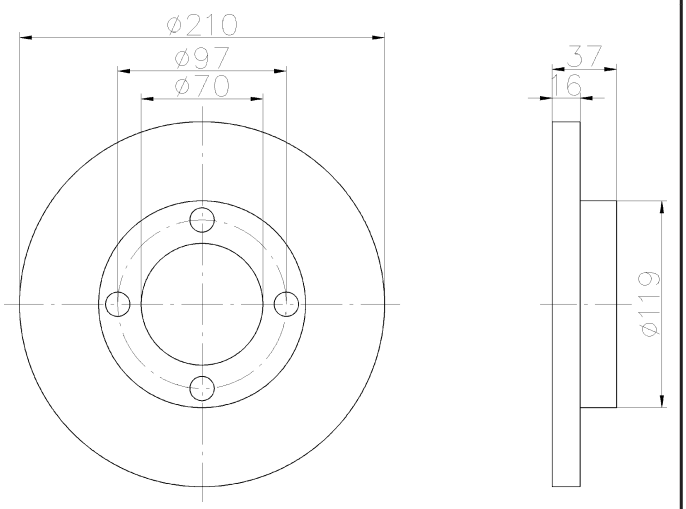

92112800

25.4

MITSUBISHI

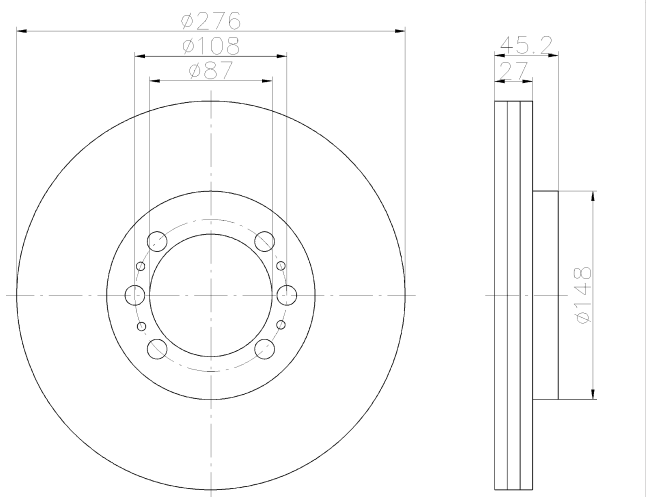

92112900

22.4

MITSUBISHI

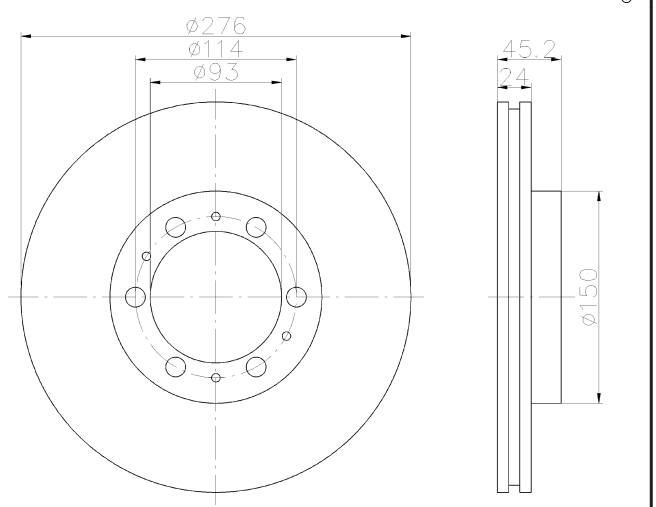

92113000

26

TOYOTA

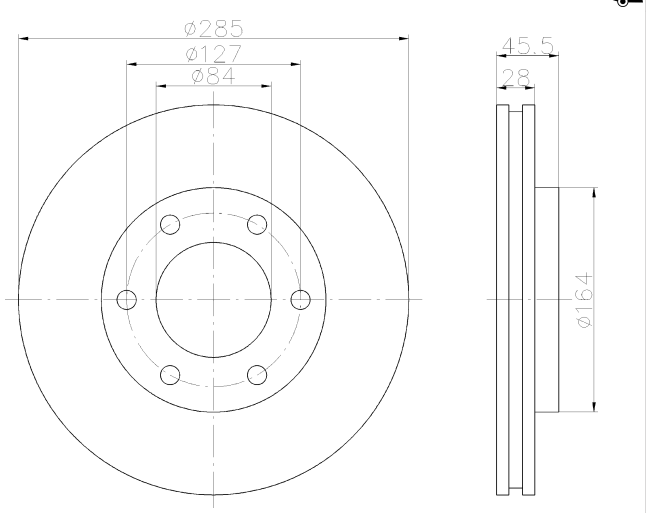

92113103

8 PRO

NISSAN

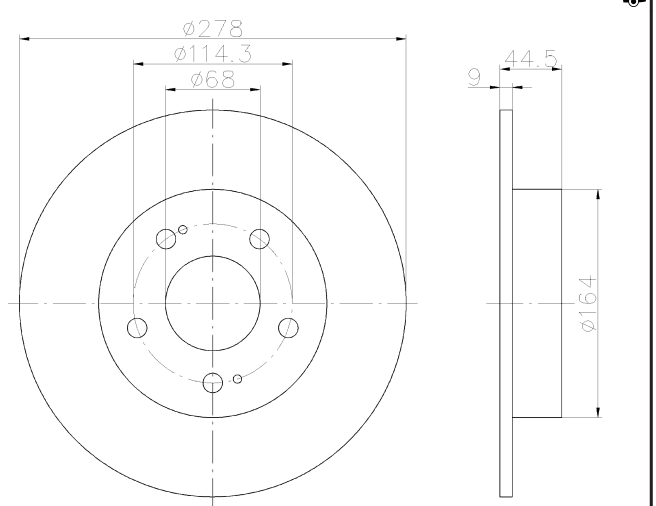

Illustrations

92113300

15

SUZUKI

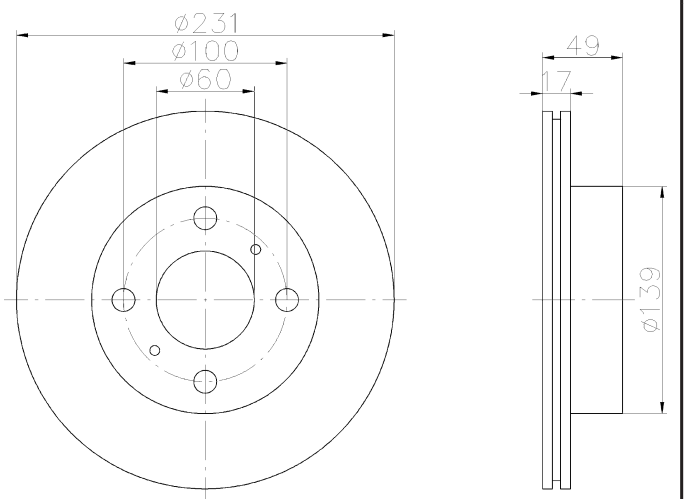

92113400

27.4

MERCEDES-BENZ, PUCH

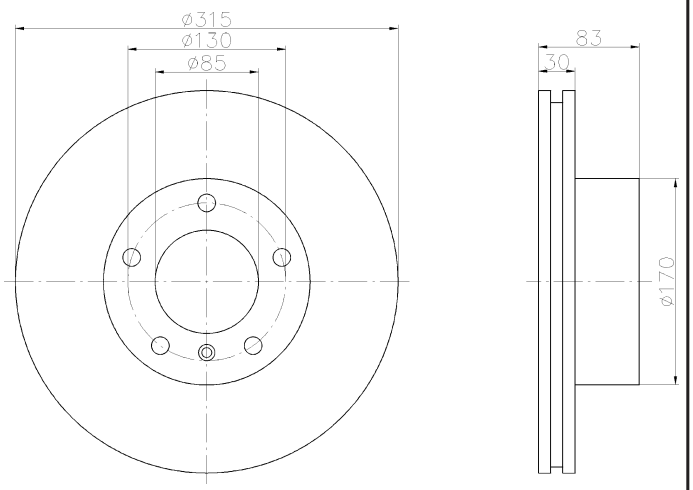

92113500

22.7

JEEP

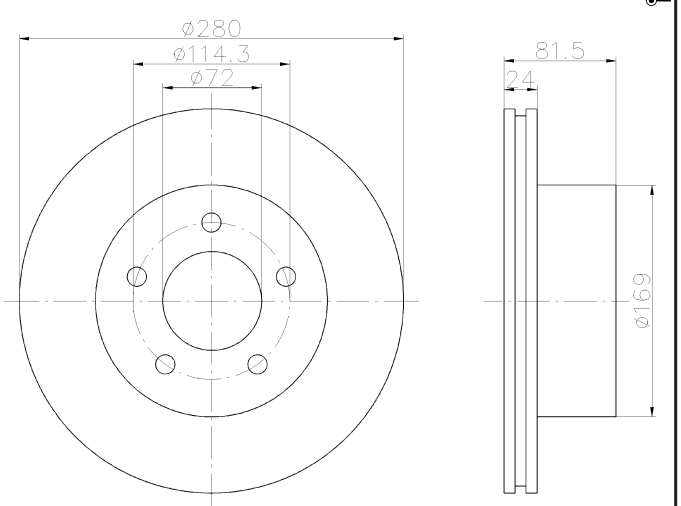

92113600

24.7

JEEP

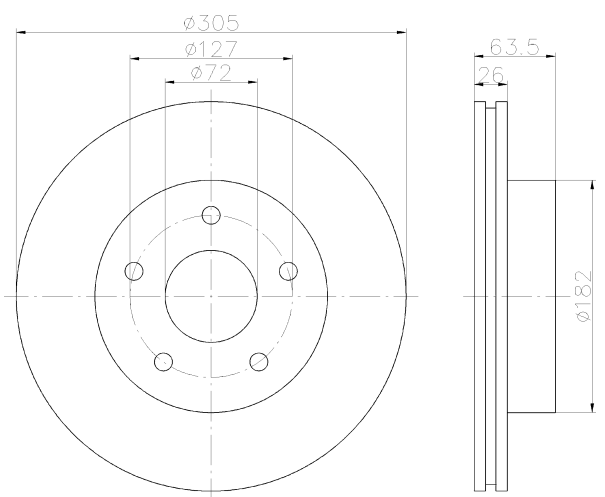

92113700

8.5

JEEP

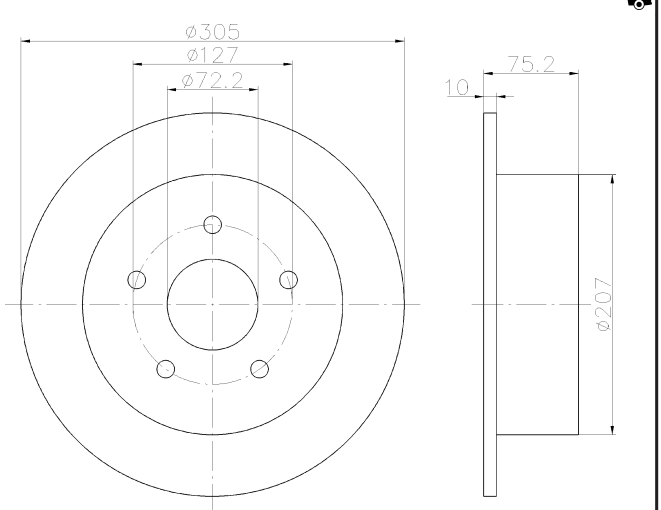

92113803

21.8

PRO

RENAULT

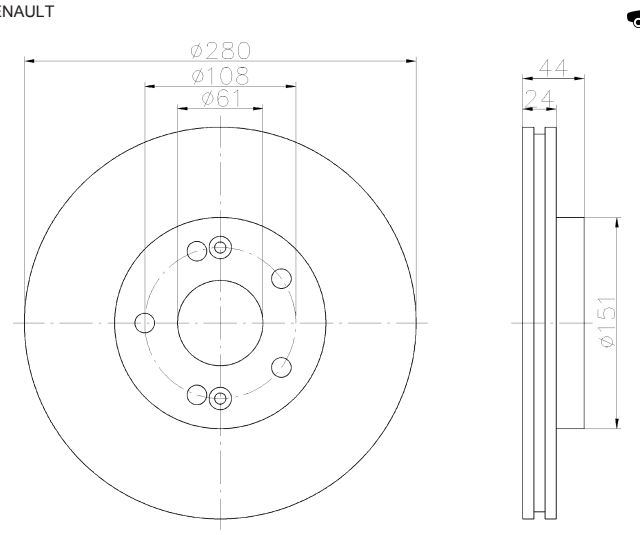

Illustrations

92113903

21.8 PRO

RENAULT

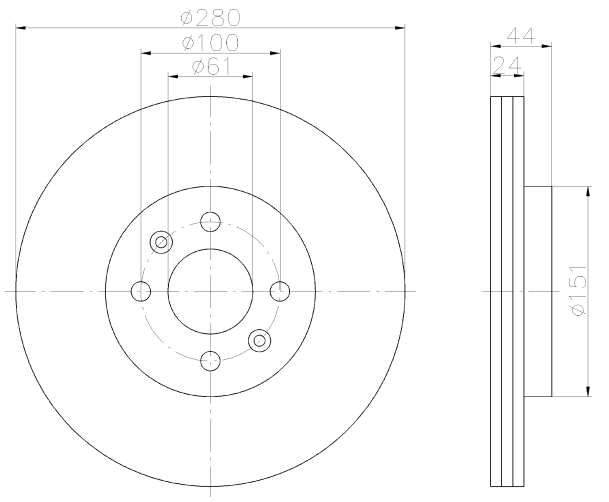

92114000

15

DAIHATSU

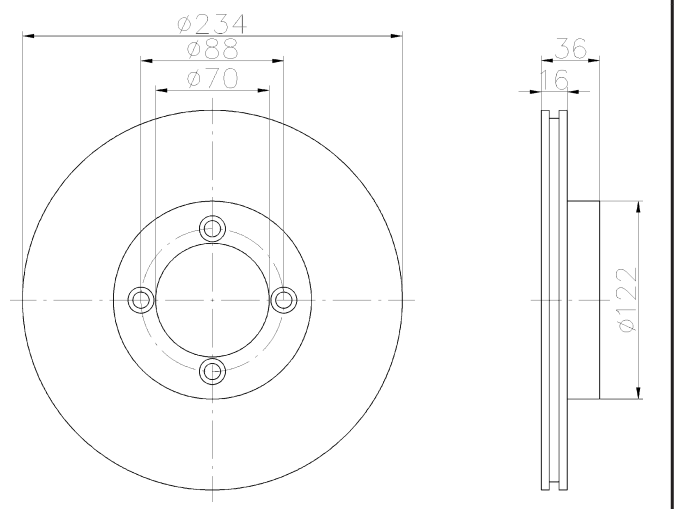

92114100

11.5

DAIHATSU

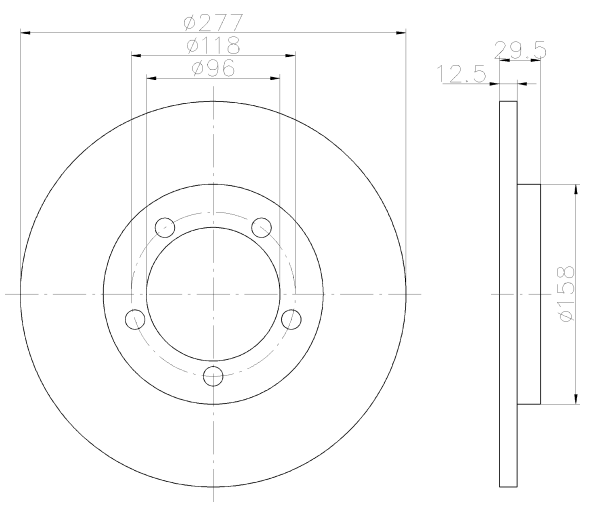

92114200

17

DAIHATSU

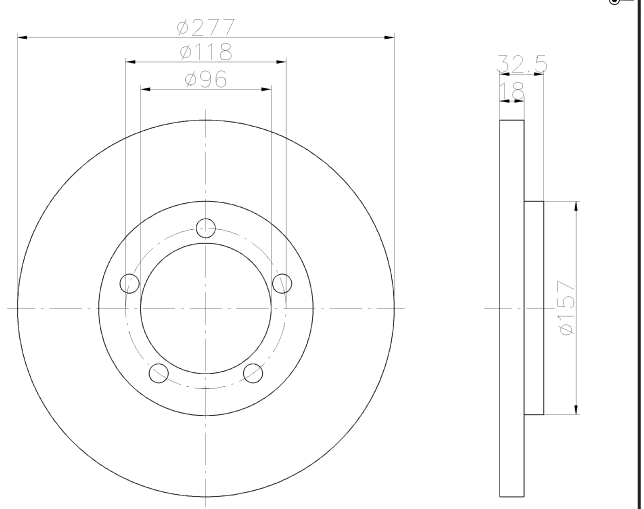

92114400

24

TOYOTA

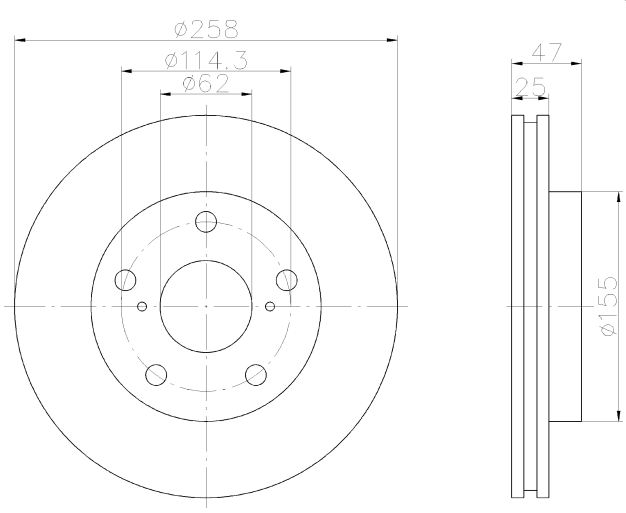

92114500

15

TOYOTA

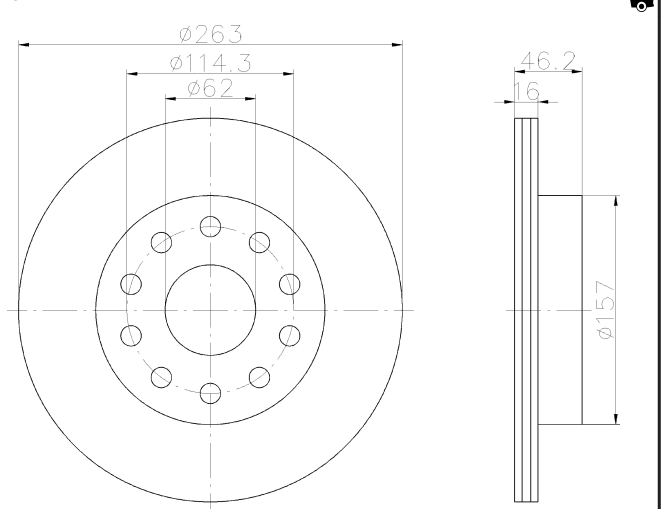

92114600

17

TOYOTA

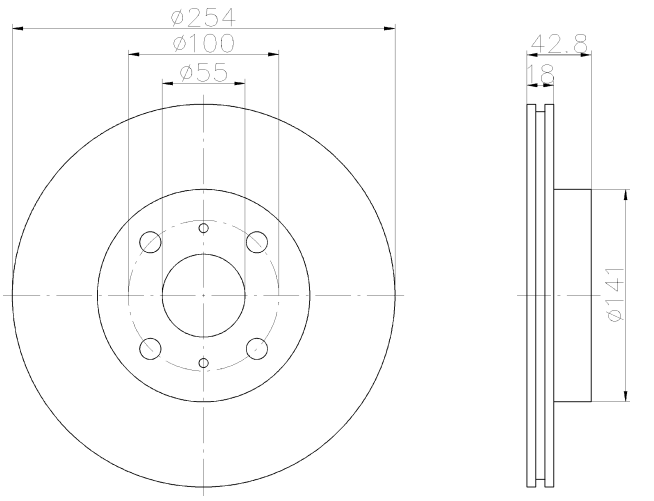

92114700

9

ALFA ROMEO

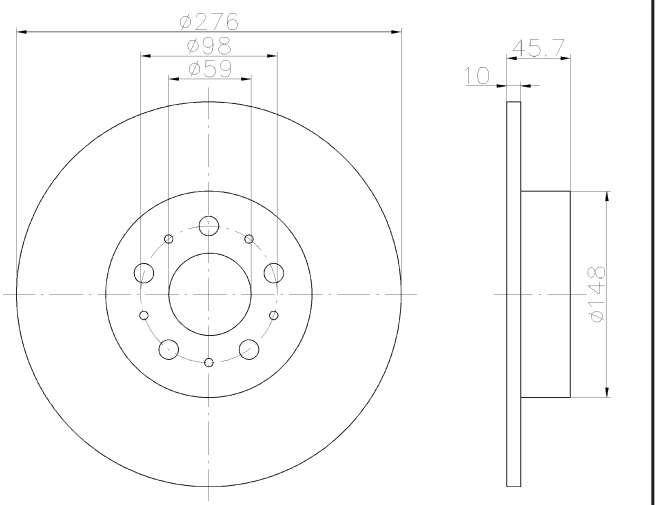

92114900

22

KIA

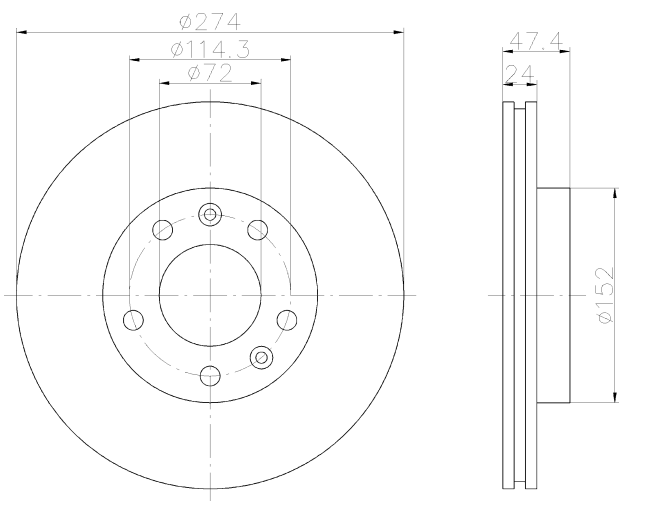

92115000

26

CITROËN, FIAT, LANCIA, PEUGEOT

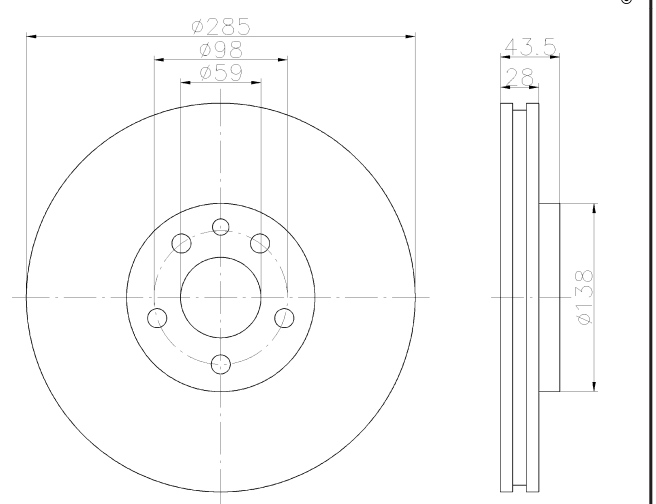

92115103

25.4 PRO

MERCEDES-BENZ, MERCEDES-BENZ (BBDC)

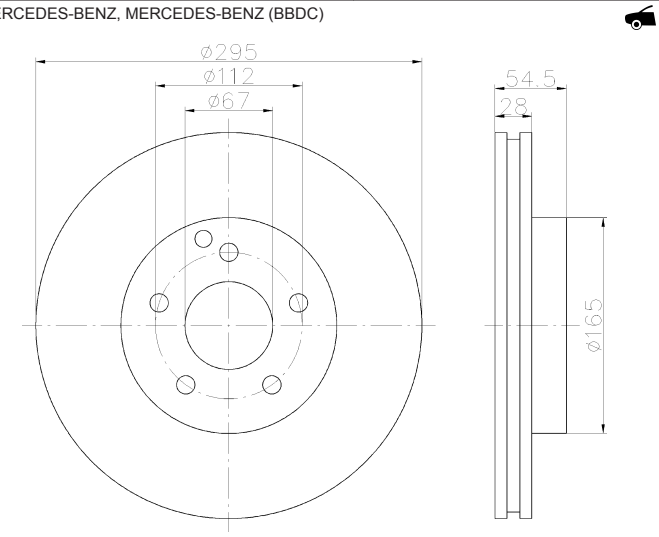

92115105

25.4 PRO

MERCEDES-BENZ, MERCEDES-BENZ (BBDC)

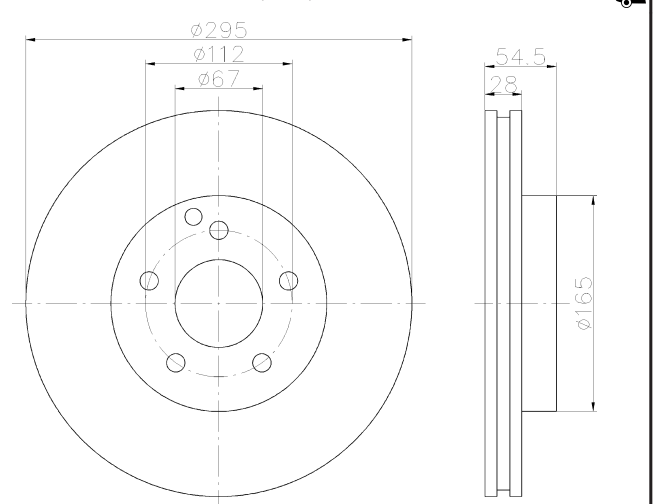

92115203

25.4 PRO

MERCEDES-BENZ, MERCEDES-BENZ (BBDC)

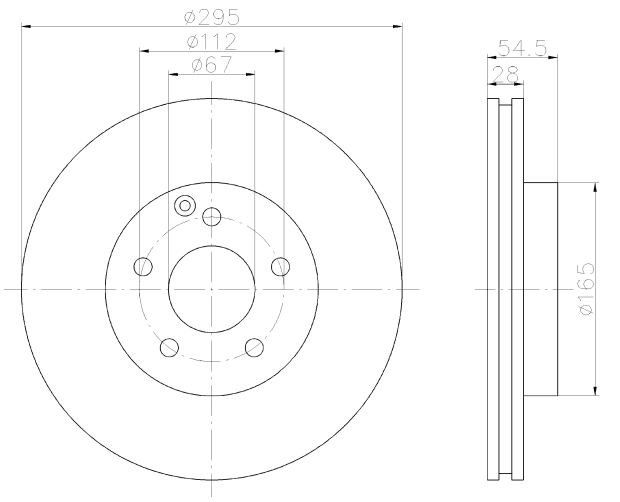

92115205

25.4 PRO

MERCEDES-BENZ, MERCEDES-BENZ (BBDC)

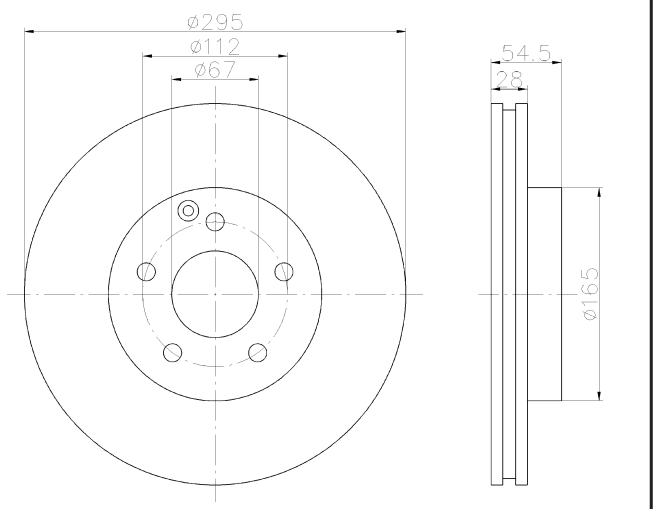

92115303

25.4 PRO

MERCEDES-BENZ, MERCEDES-BENZ (BBDC)

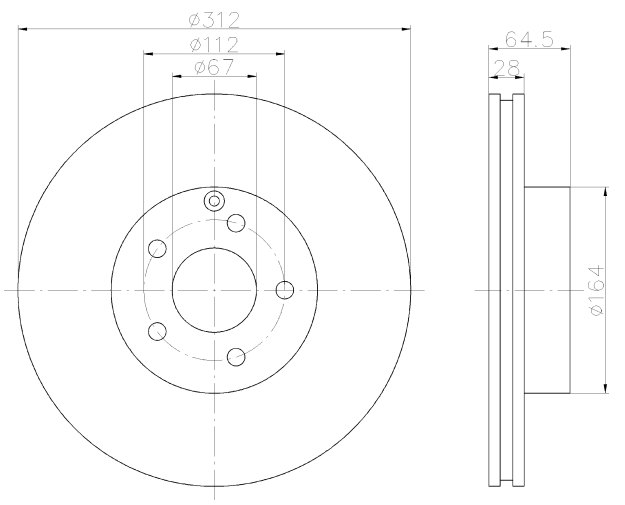

92115403

8.3 PRO

MERCEDES-BENZ, MERCEDES-BENZ (BBDC)

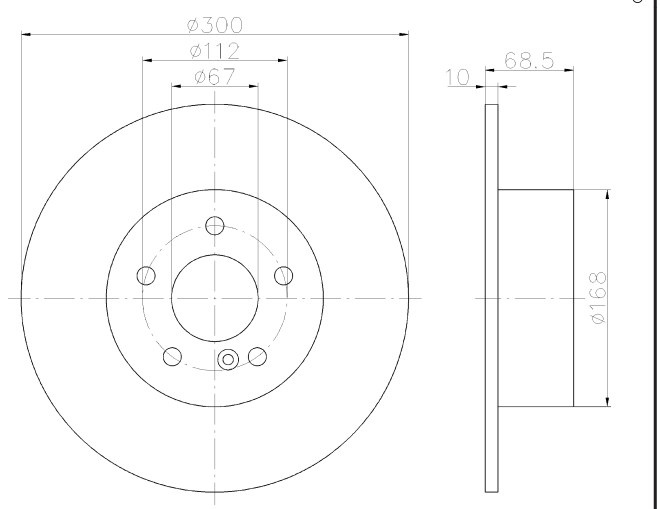

92115405

8.3 PRO

MERCEDES-BENZ, MERCEDES-BENZ (BBDC)

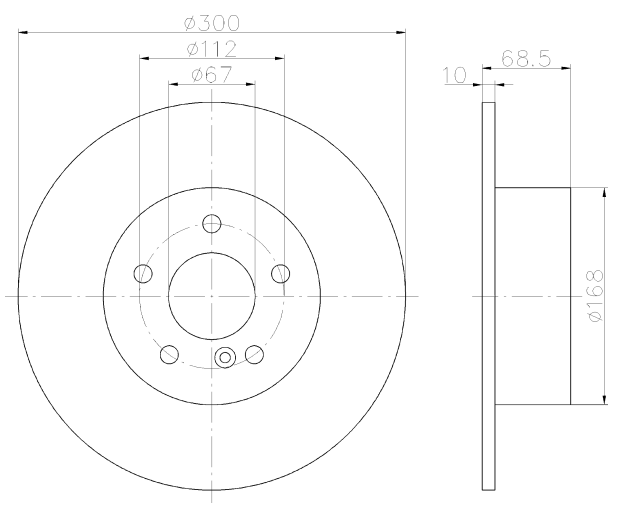

92115503

19.4 PRO

MERCEDES-BENZ, MERCEDES-BENZ (BBDC)

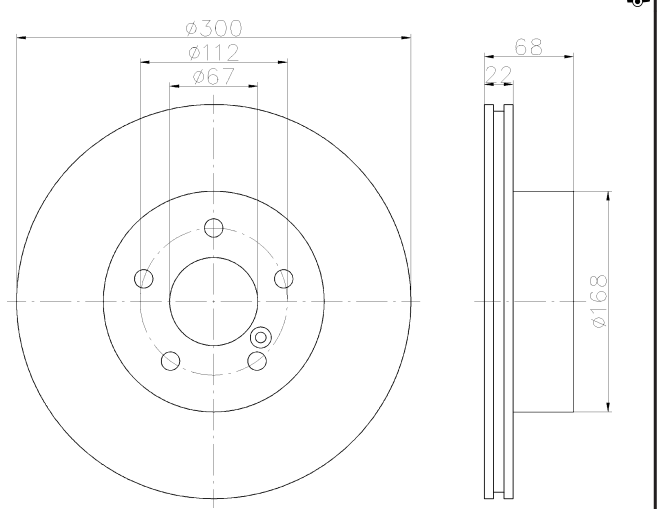

92115505

19.4 PRO

MERCEDES-BENZ, MERCEDES-BENZ (BBDC)

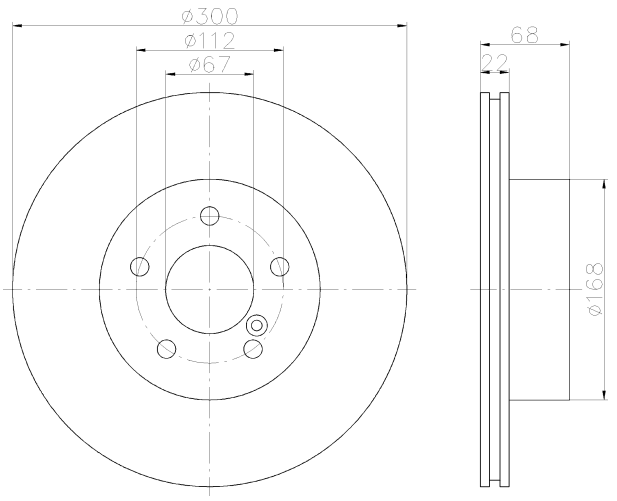

92115603

18 PRO

TOYOTA

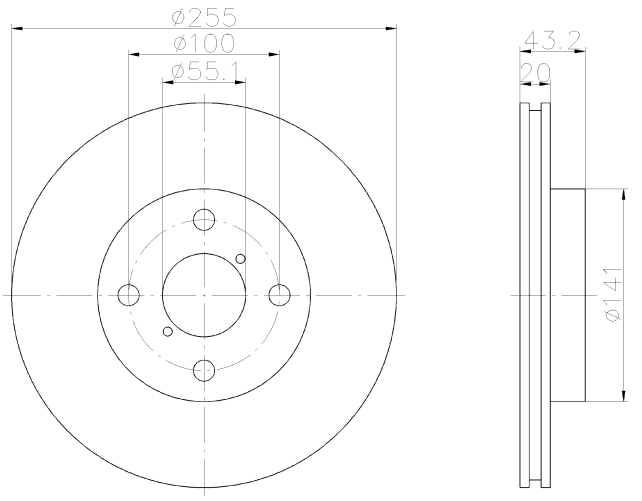

92115703

18 PRO

LAND ROVER

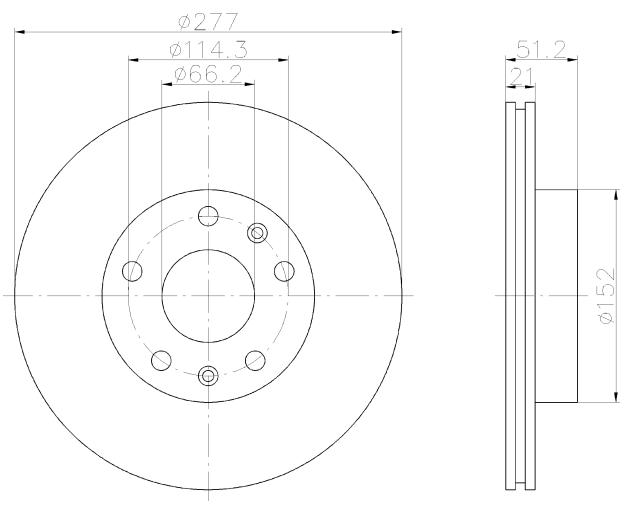

92115800

26

LANCIA

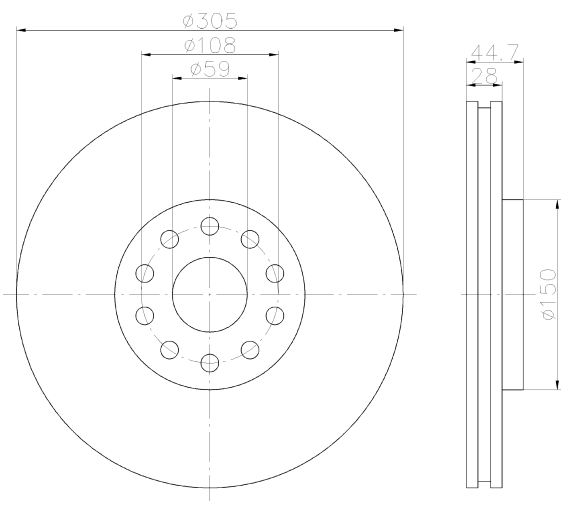

92115903

25 PRO

NISSAN, OPEL, RENAULT, VAUXHALL

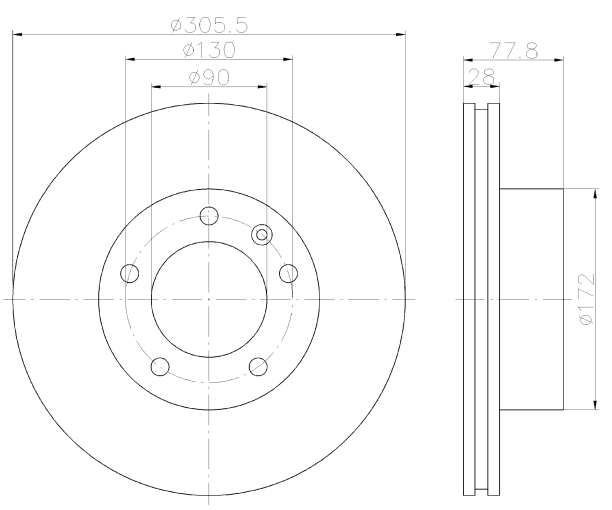

92116003

24 PRO

NISSAN, OPEL, RENAULT, VAUXHALL

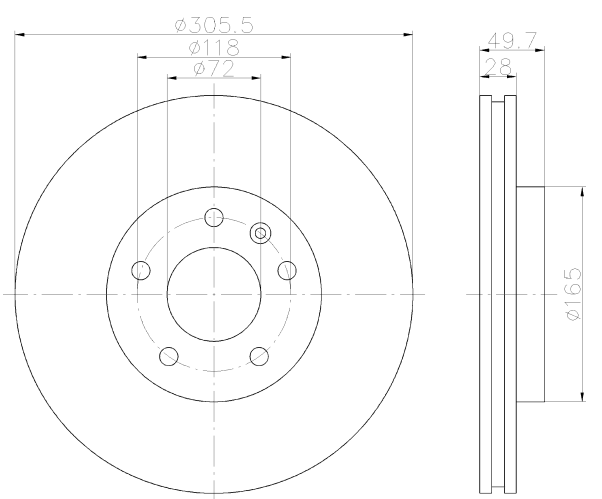

92116100

14.2

CITROËN, FIAT, PEUGEOT

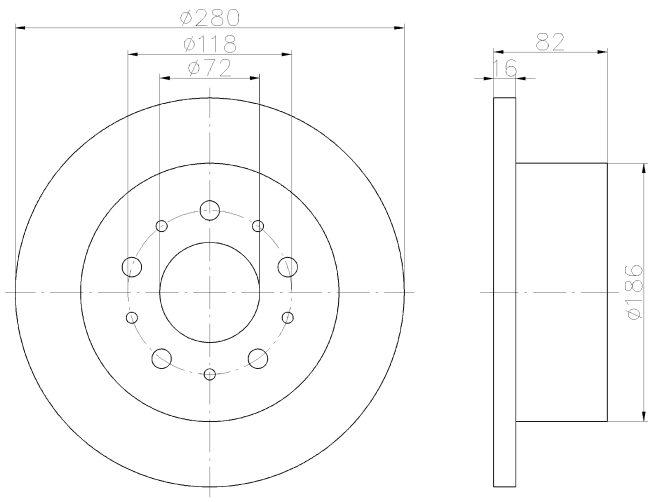

92116203

PRO

14.2

CITROËN, FIAT, PEUGEOT

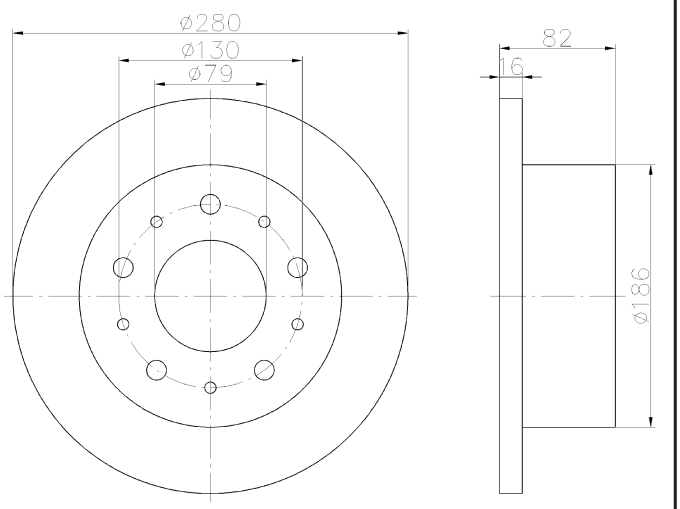

92116603

PRO

21.9

CITROËN, FIAT, PEUGEOT

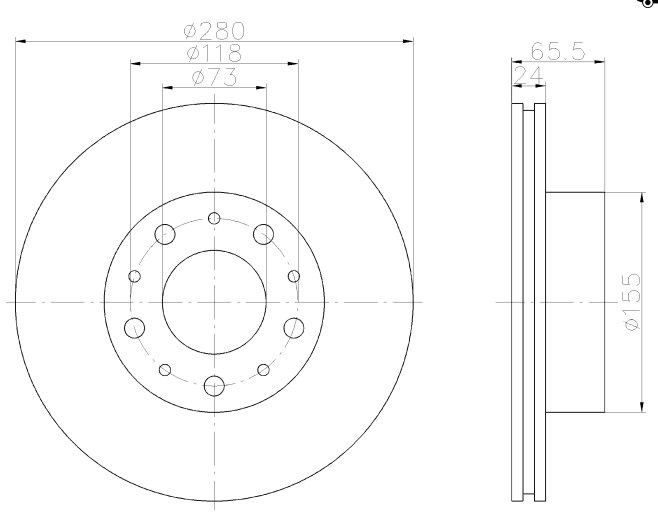

92116703

PRO

21.9

CITROËN, FIAT, PEUGEOT

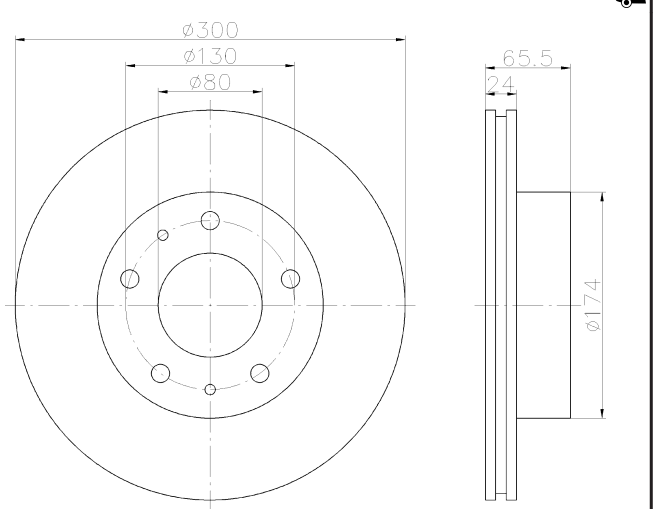

92116800

20.2

LANCIA

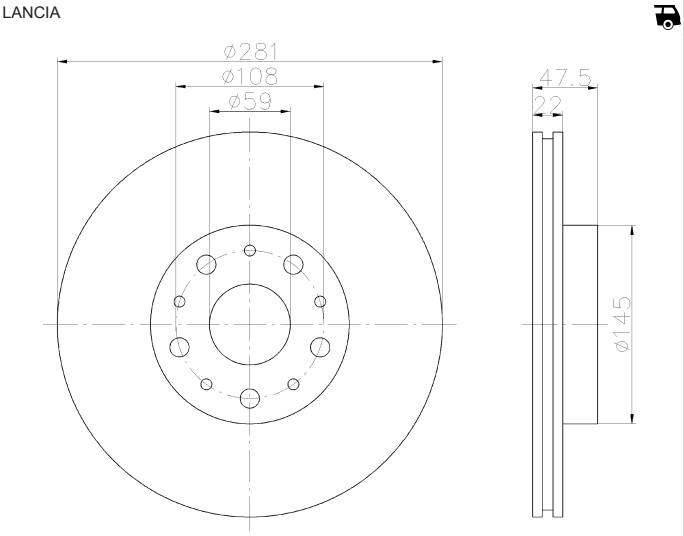

92116900

11

FORD ASIA / OZEANIA, KIA

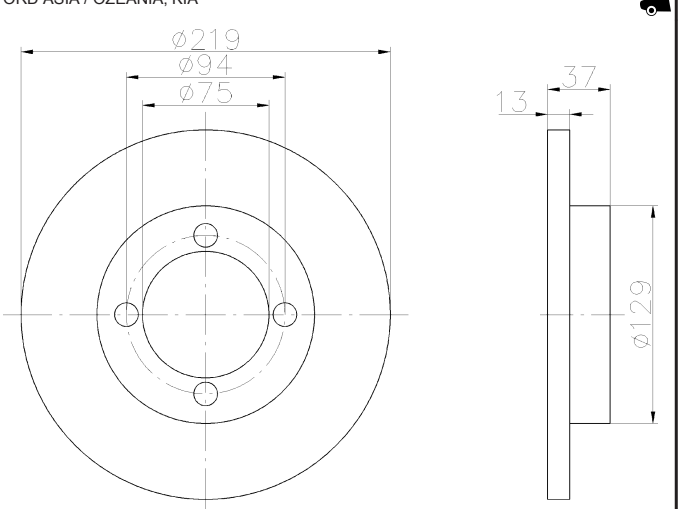

92117000

9

TOYOTA

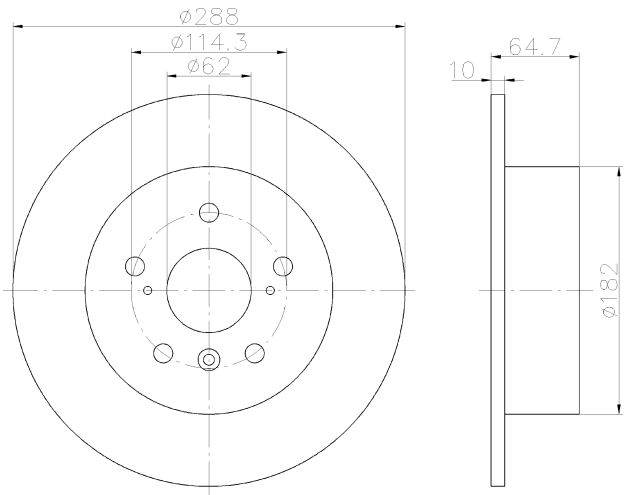

92117103

PRO

8

HYUNDAI, HYUNDAI (BEIJING), VOLKSWAGEN (FAW), VOLKSWAGEN (SVW)

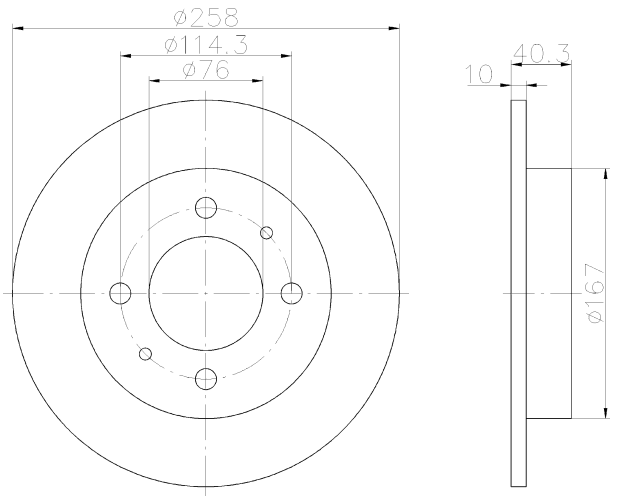

92117303

PRO

8

AUDI

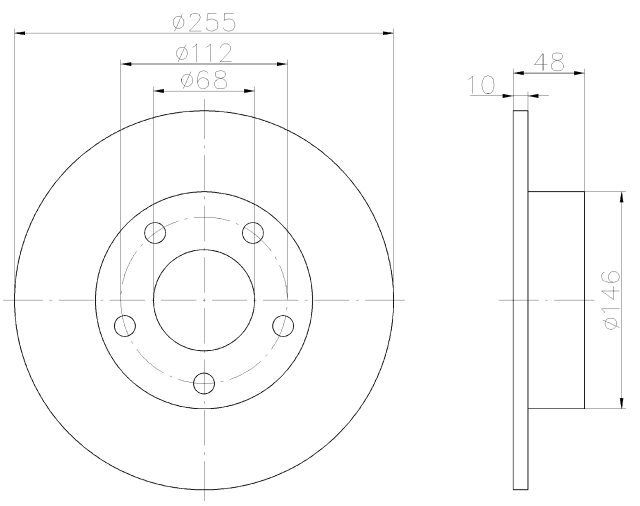

92118003

PRO

18.2

FIAT, FORD

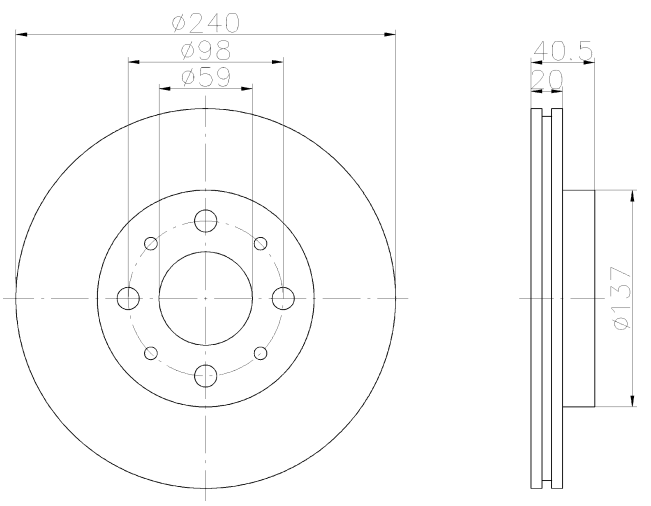

92118100

30

CITROËN, FIAT, LANCIA, PEUGEOT

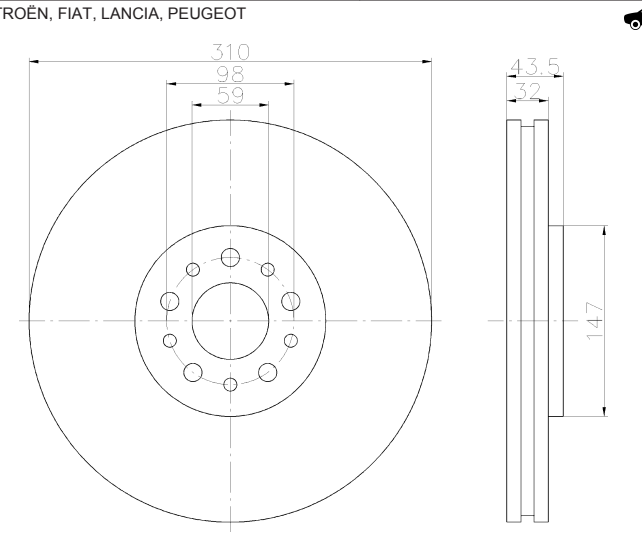

92118203

PRO

10

CITROËN, FIAT, LANCIA, PEUGEOT

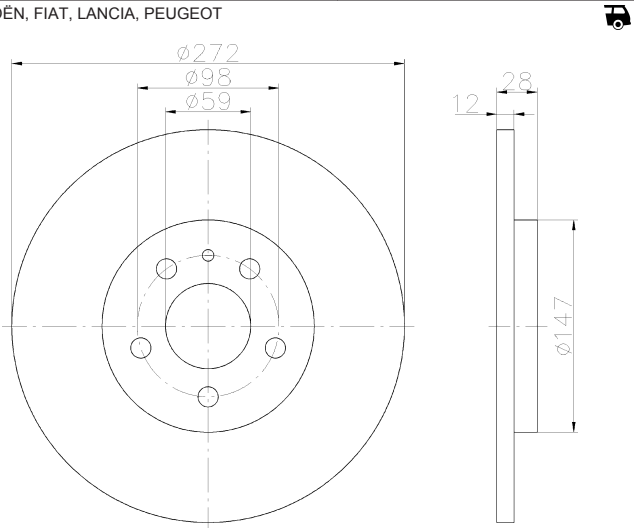

92118303

25 PRO

CADILLAC, CHEVROLET, HOLDEN, OPEL, SAAB, VAUXHALL

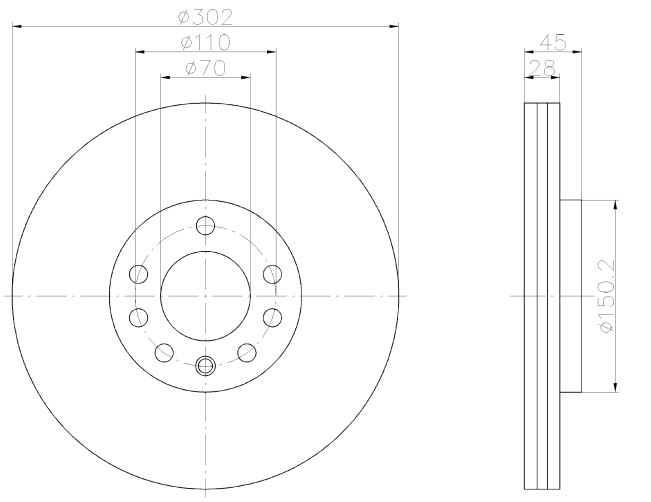

92118403

18 PRO

CADILLAC, CHEVROLET, FIAT, HOLDEN, OPEL, SAAB, VAUXHALL

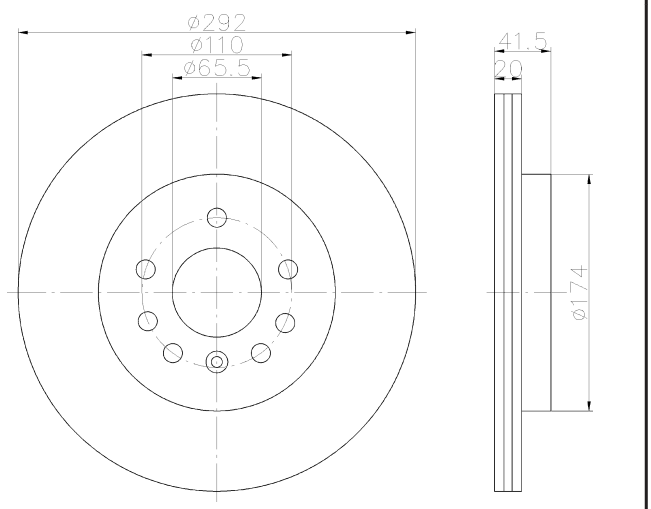

92118503

10 PRO

CHEVROLET, FIAT, HOLDEN, OPEL, SAAB, VAUXHALL

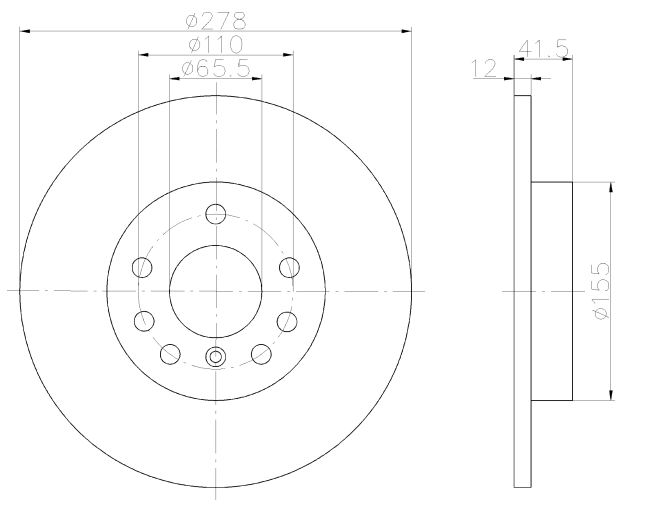

92118703

22 PRO

CADILLAC, CHEVROLET, FIAT, HOLDEN, OPEL, SAAB, VAUXHALL

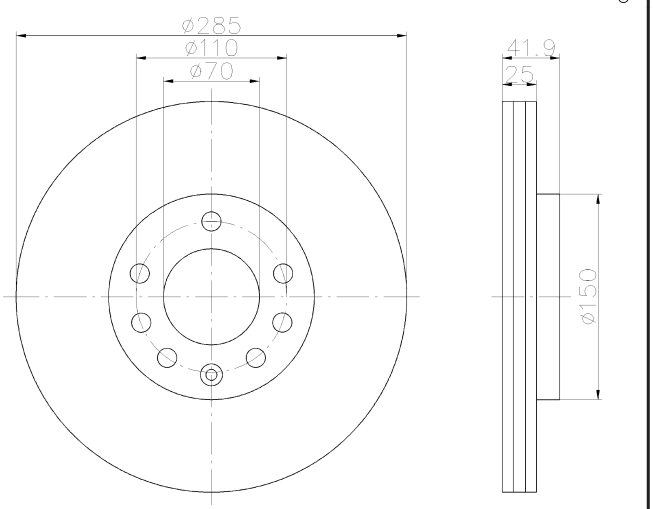

92118803

25 PRO

CADILLAC, CHEVROLET, HOLDEN, OPEL, SAAB, VAUXHALL

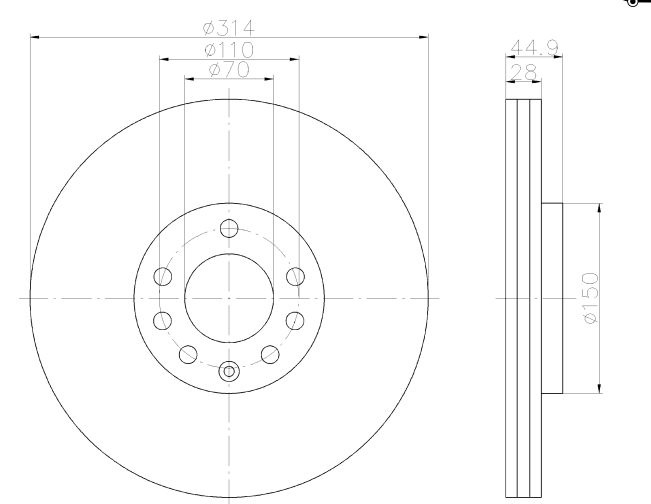

92118903

21.8 PRO

RENAULT

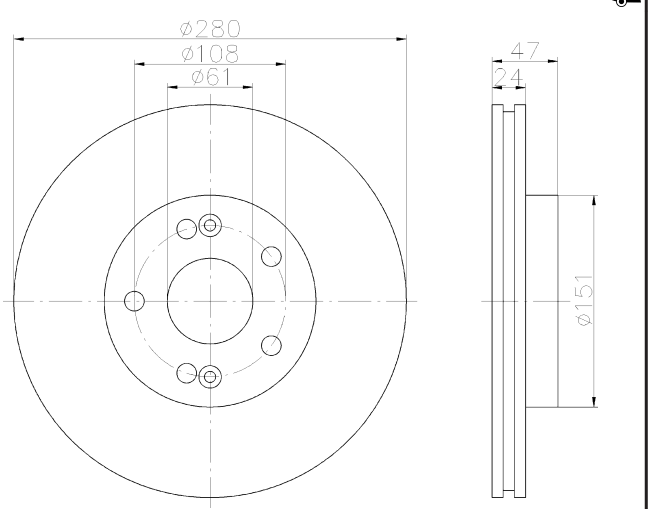

92119003

22.8 PRO

RENAULT

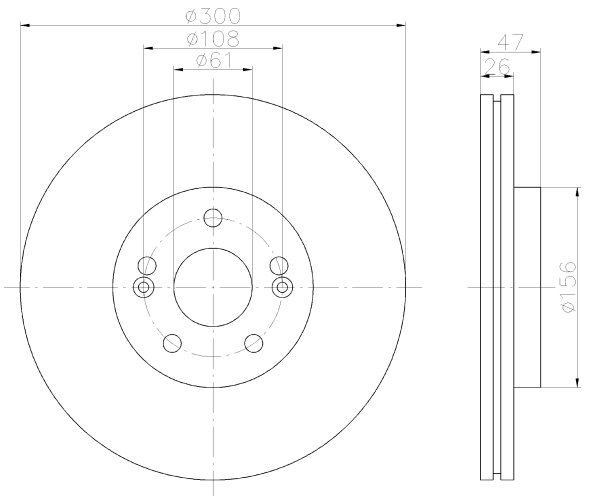

92119203

19.8 PRO

DACIA, LADA, NISSAN, RENAULT

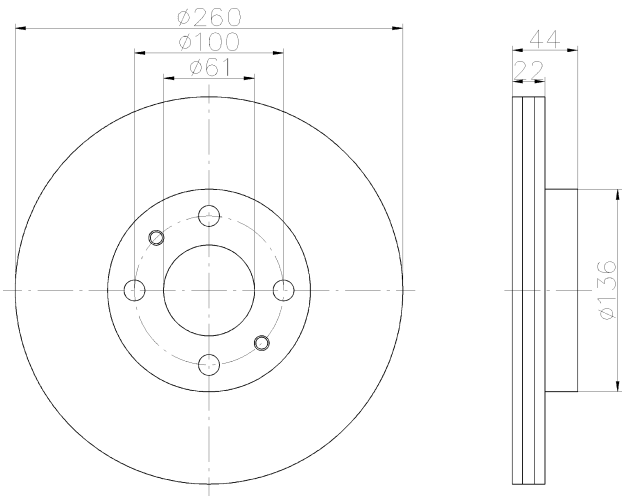

92119403

25.4 PRO

RENAULT

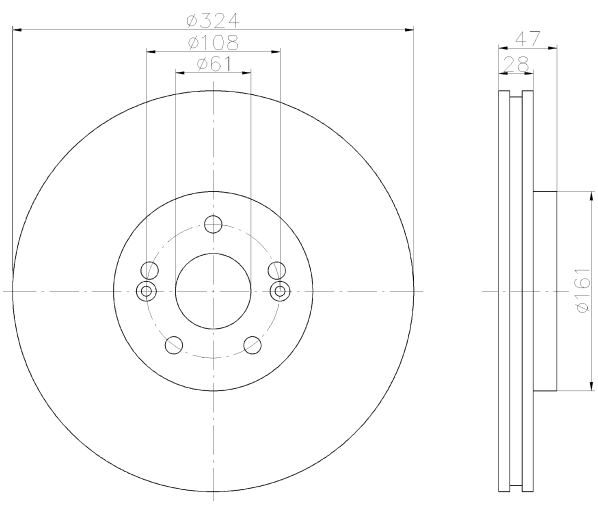

92119600

30

ALFA ROMEO

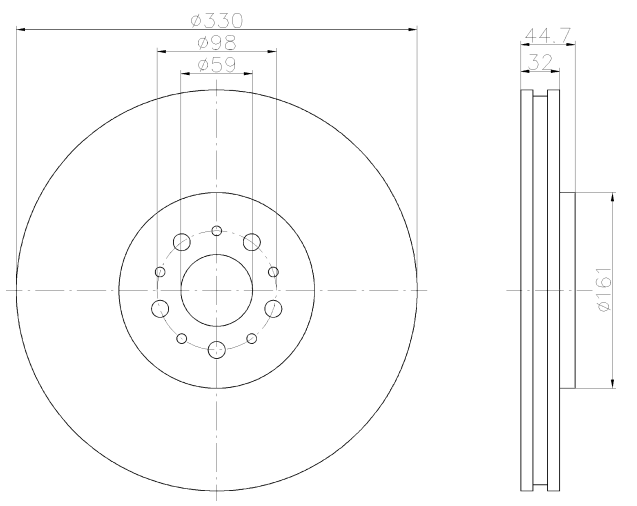

92119700

26

JEEP

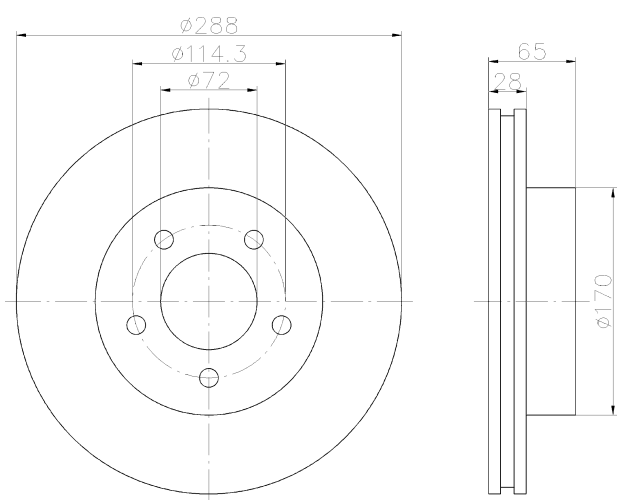

92119803

26 PRO

MERCEDES-BENZ

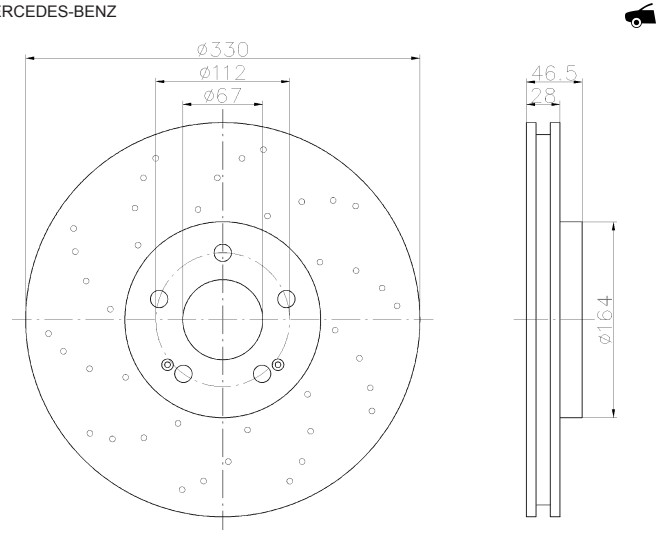

92119903

29.4 PRO

MERCEDES-BENZ, MERCEDES-BENZ (BBDC)

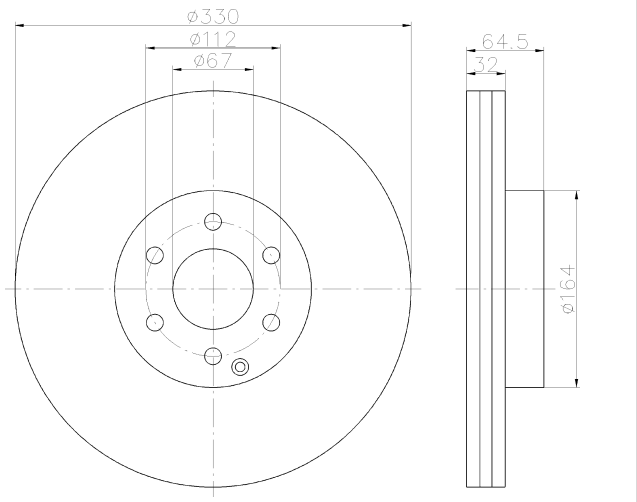

92119905

29.4 PRO

MERCEDES-BENZ, MERCEDES-BENZ (BBDC)

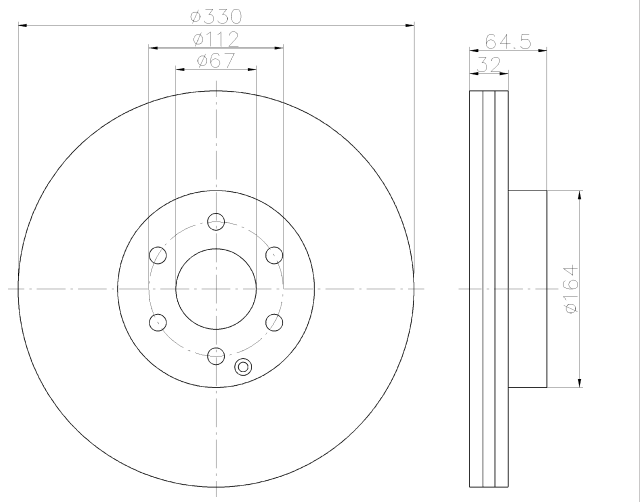

92120000

24

MERCEDES-BENZ

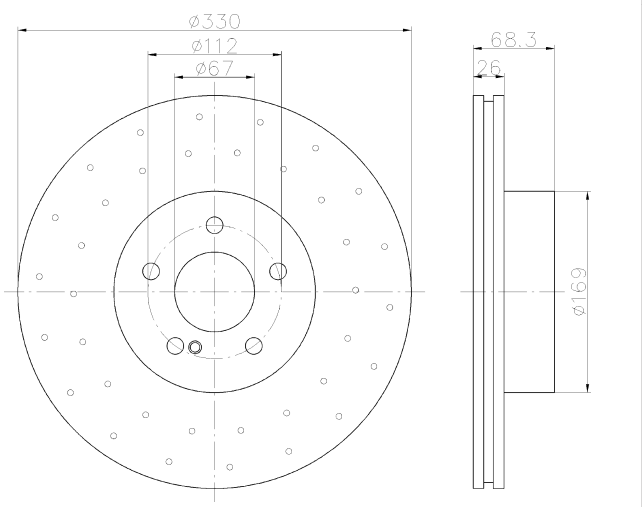

92120100

26

MERCEDES-BENZ

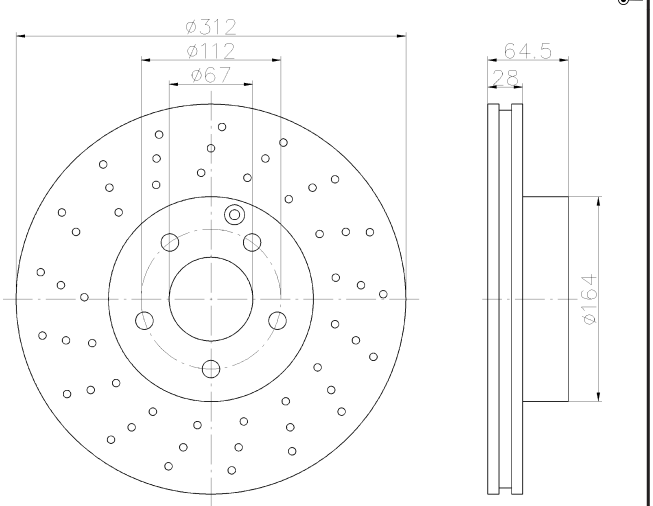

92120203

30 PRO

MERCEDES-BENZ, MERCEDES-BENZ (BBDC)

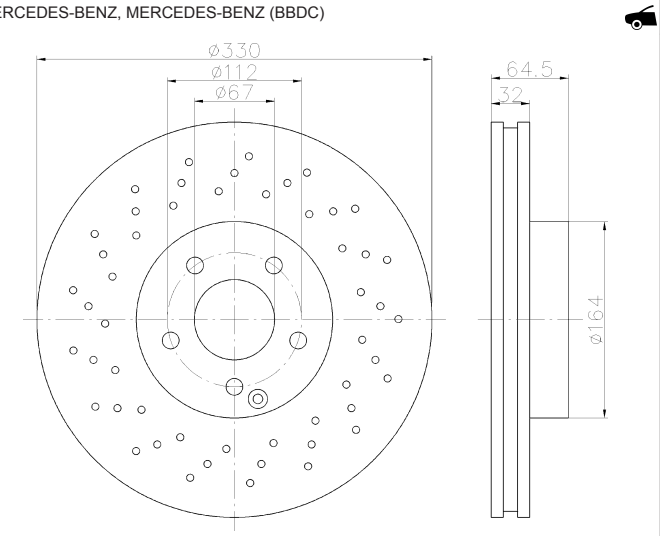

92120303

34 PRO

MERCEDES-BENZ

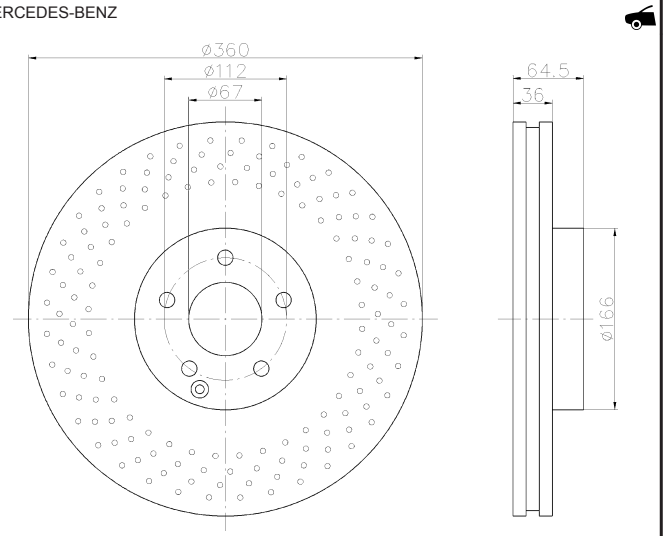

92120305

34 PRO

MERCEDES-BENZ

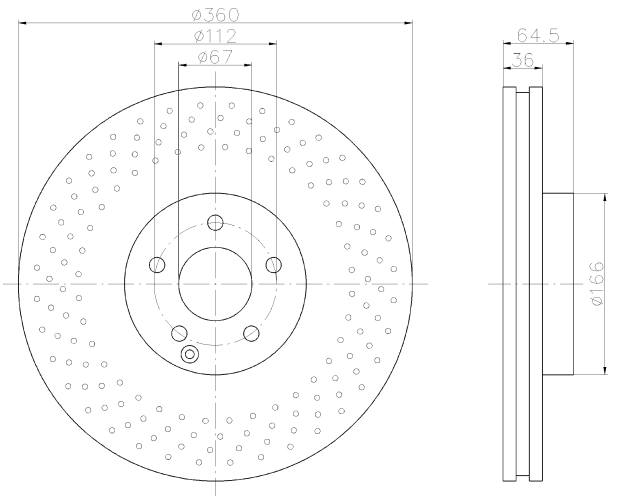

92120400

24

MERCEDES-BENZ

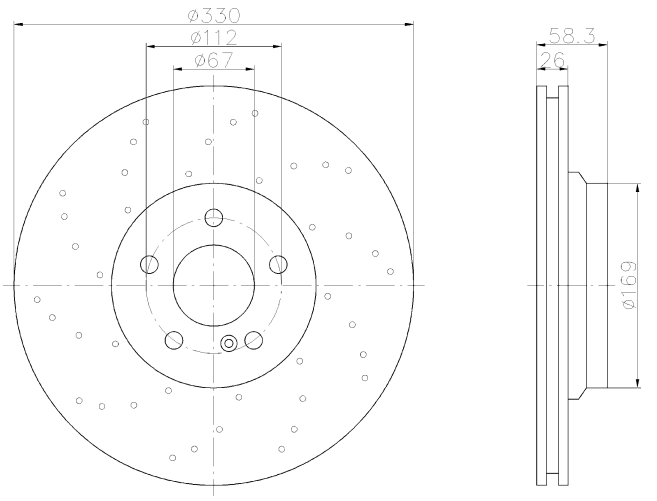

92120503

22 PRO

AUDI, AUDI (FAW), SEAT, SKODA, SKODA (SVW), VOLKSWAGEN, VOLKSWAGEN (FAW), VOLKSWAGEN (SVW)

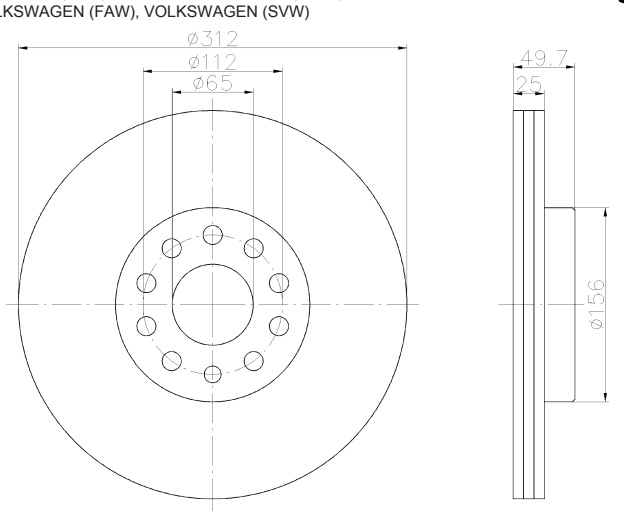

92120603

27 PRO

AUDI, SEAT, SKODA, VOLKSWAGEN

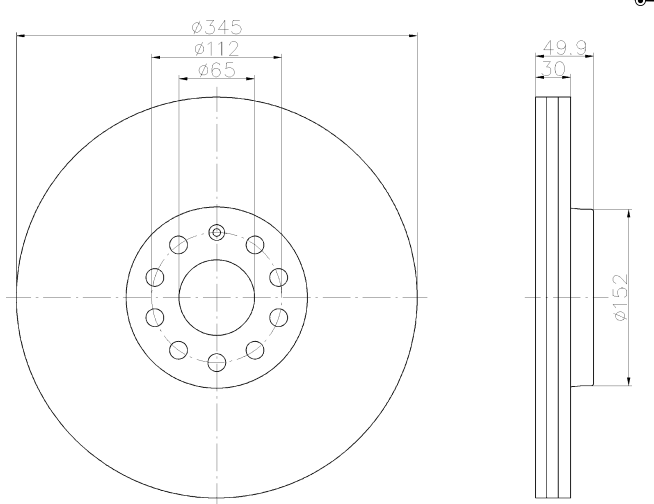

92120703

19 PRO

AUDI, SEAT, SKODA, VOLKSWAGEN, VOLKSWAGEN (FAW)

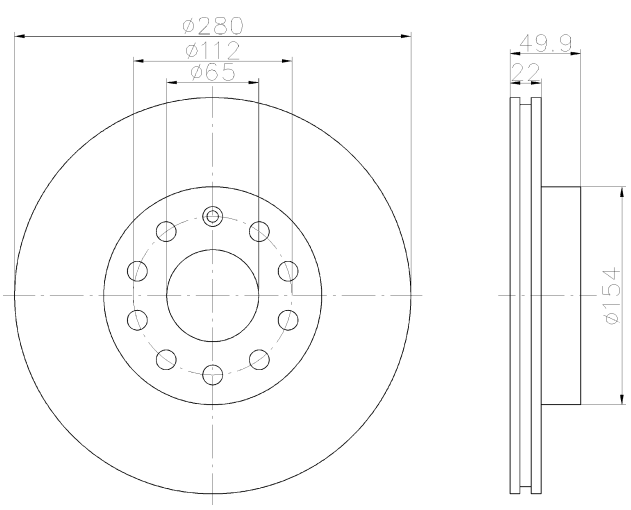

92120705

19 PRO

AUDI, SEAT, SKODA, VOLKSWAGEN, VOLKSWAGEN (FAW)

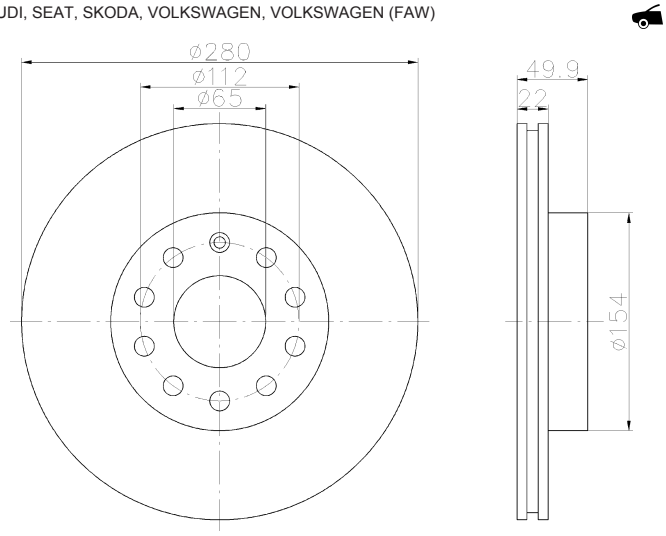

92120803

22 PRO

AUDI, SEAT, SKODA, VOLKSWAGEN, VOLKSWAGEN (SVW)

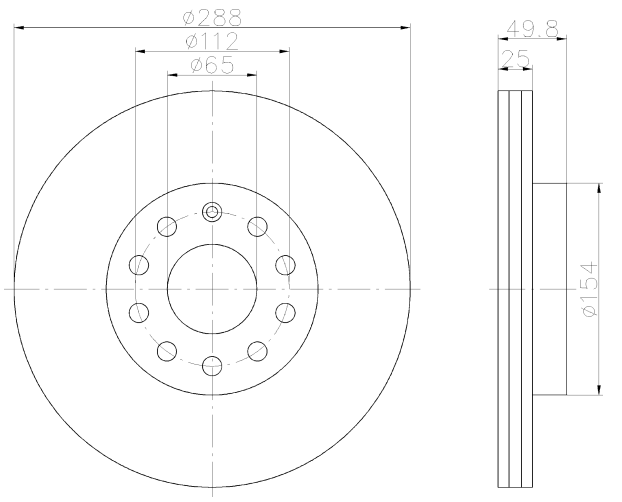

92120805

22 PRO

AUDI, SEAT, SKODA, VOLKSWAGEN, VOLKSWAGEN (SVW)

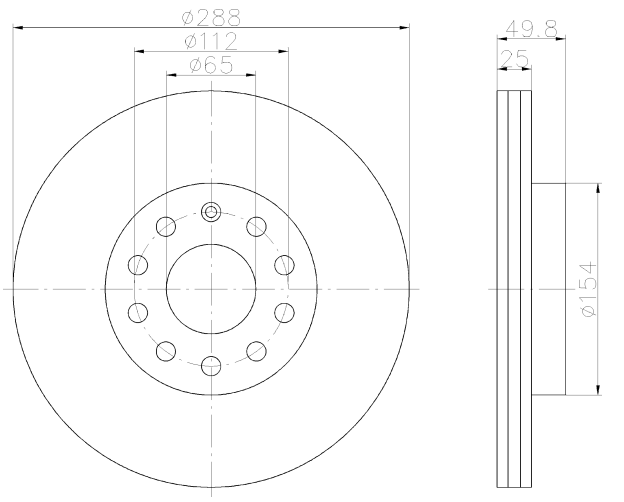

92120903

8 PRO

AUDI, SEAT, SKODA, VOLKSWAGEN

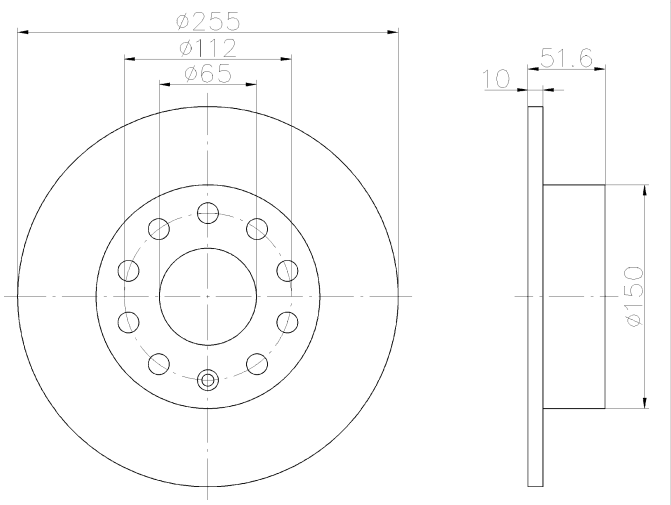

92121003

23 PRO

SKODA, VOLKSWAGEN, VOLKSWAGEN (SVW)

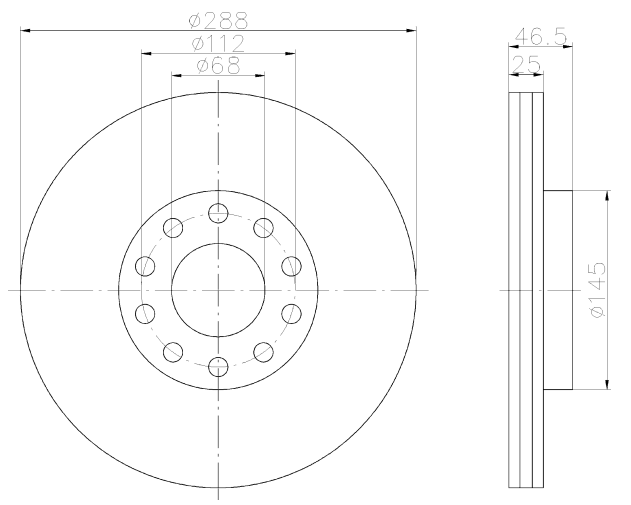

92121103

10 PRO

AUDI, SEAT, SKODA, SKODA (SVW), VOLKSWAGEN, VOLKSWAGEN (FAW), VOLKSWAGEN (SVW)

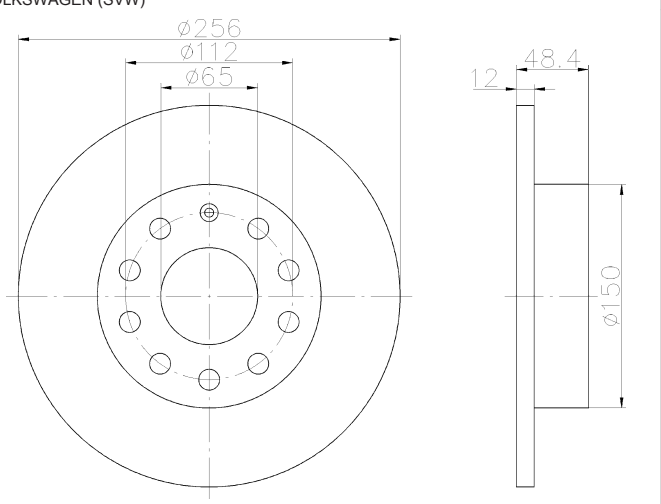

92121203

25.5 PRO

VOLKSWAGEN

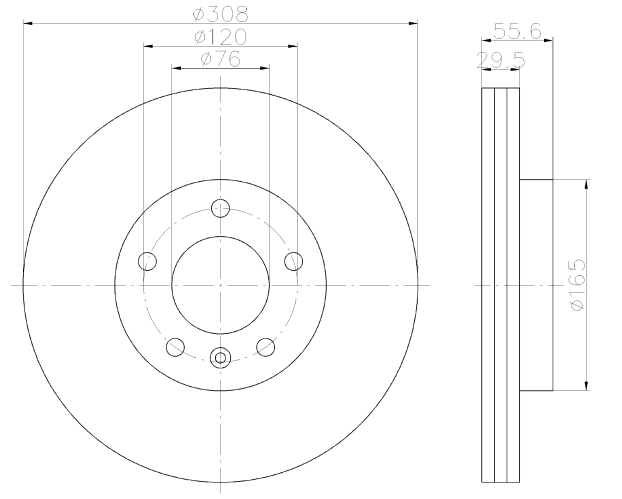

92121303

28.5 PRO

VOLKSWAGEN

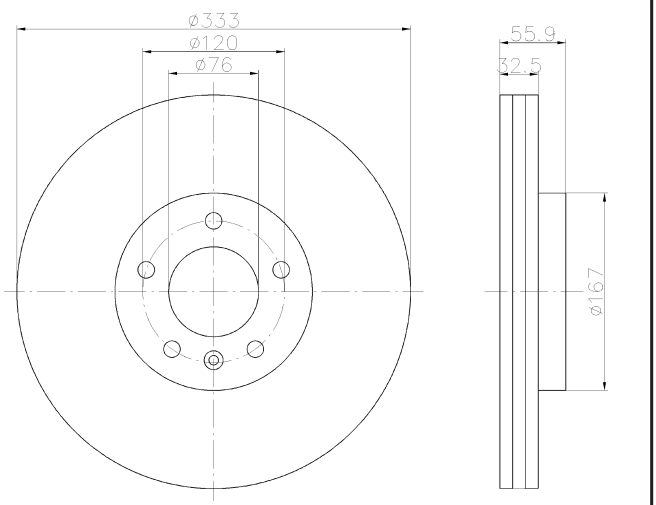

92121403

19.5 PRO

VOLKSWAGEN

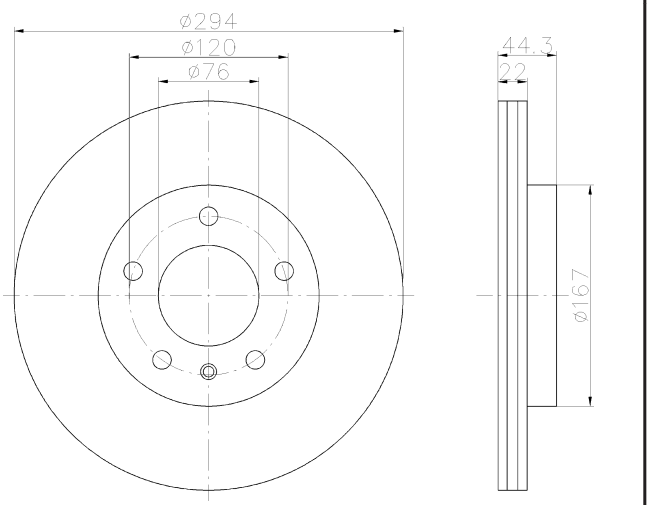

92121500

30

PORSCHE, VOLKSWAGEN

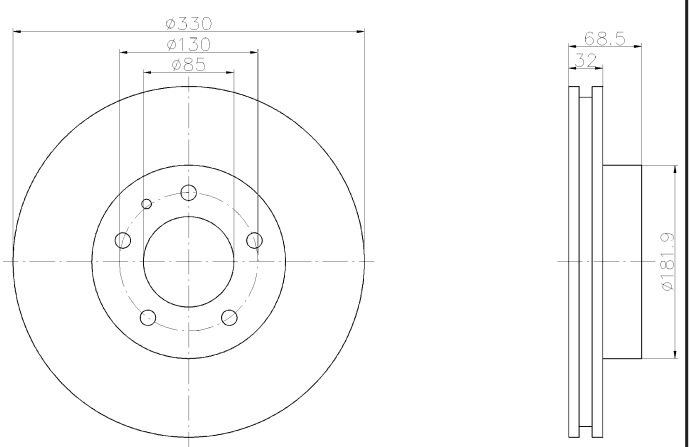

92121505

30 PRO

PORSCHE, VOLKSWAGEN

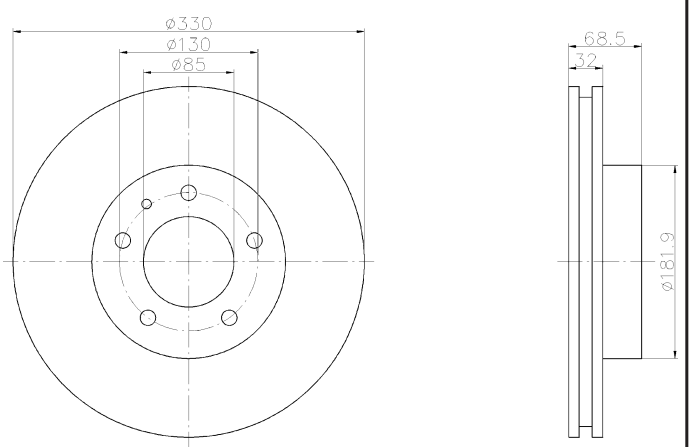

92121600

30

PORSCHE, VOLKSWAGEN

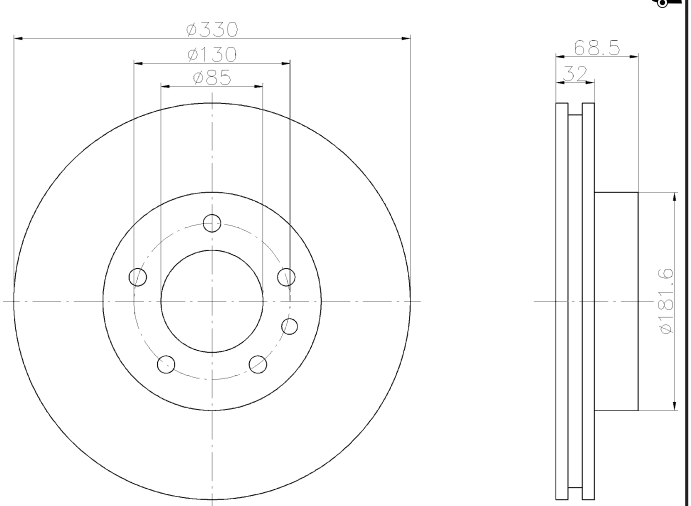

92121605

30 PRO

PORSCHE, VOLKSWAGEN

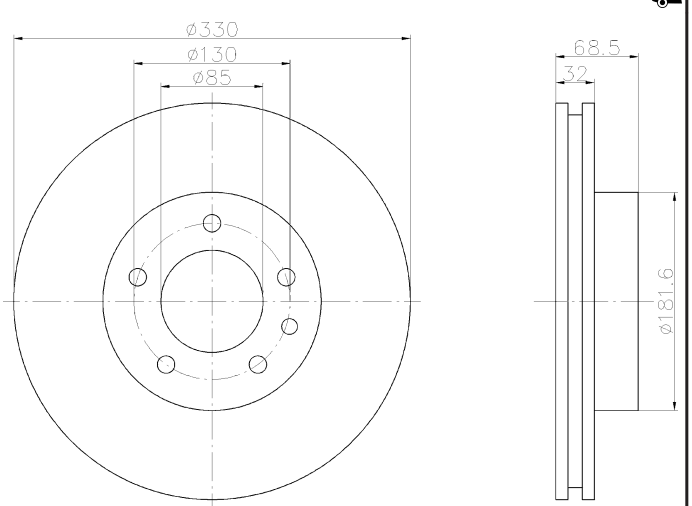

92121700

32

AUDI, PORSCHE, VOLKSWAGEN

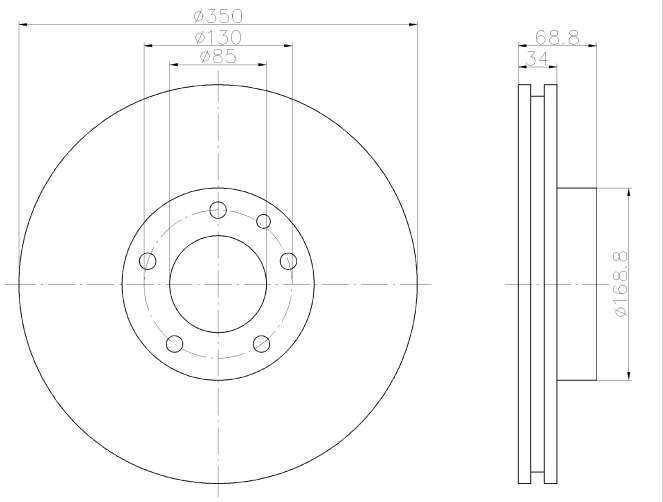

92121705

32 PRO

AUDI, PORSCHE, VOLKSWAGEN

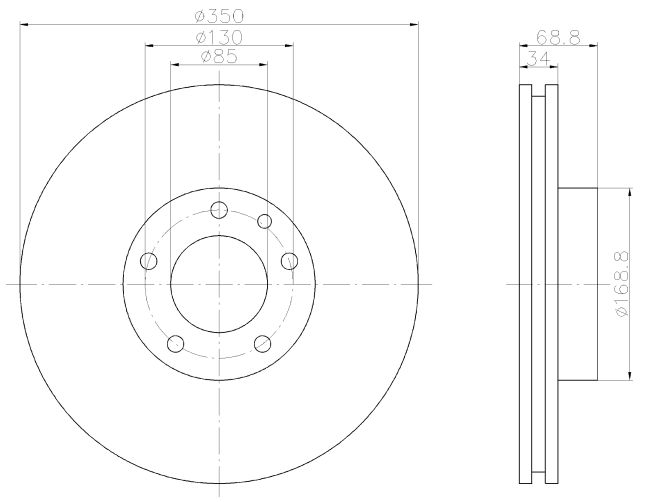

92121800

32

AUDI, PORSCHE, VOLKSWAGEN

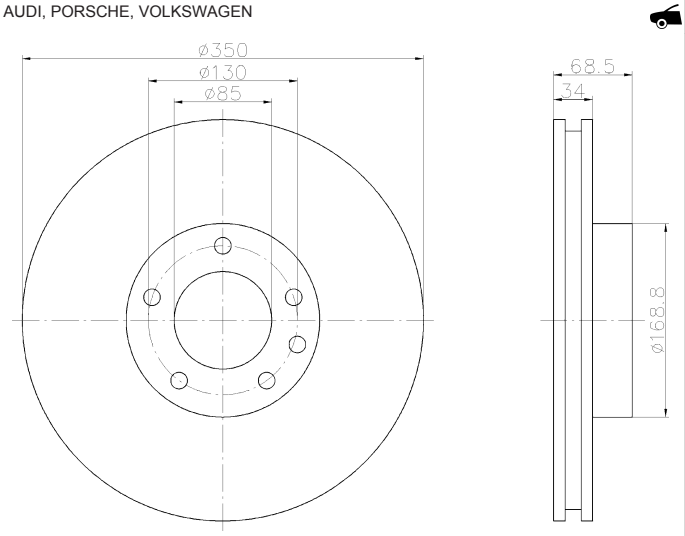

92121805

32 PRO

AUDI, PORSCHE, VOLKSWAGEN

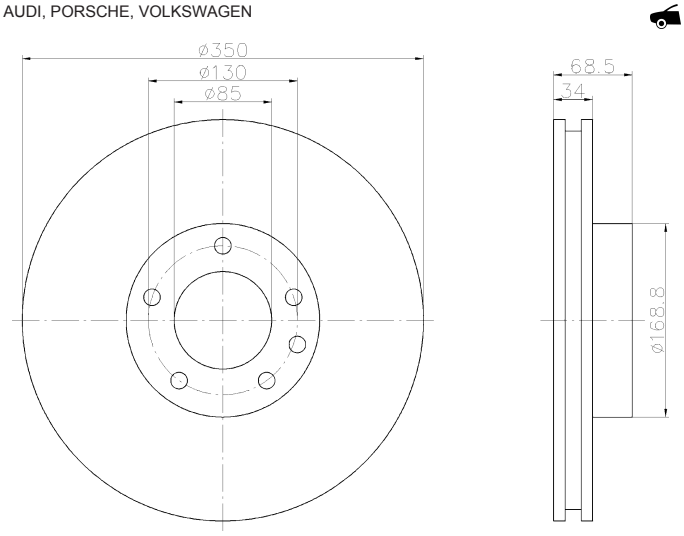

92121903

20 PRO

VOLKSWAGEN

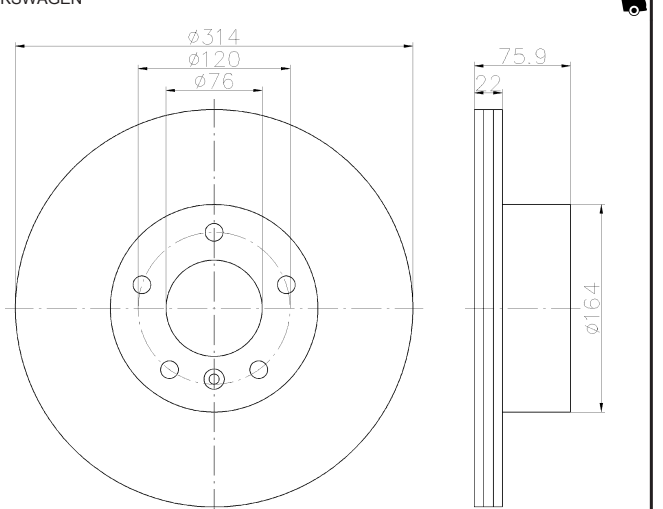

92122000

26

AUDI, PORSCHE, VOLKSWAGEN

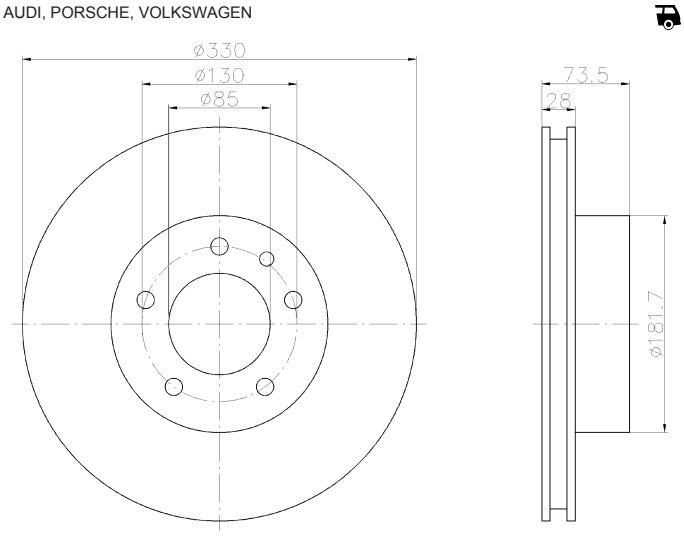

92122005

26 PRO

AUDI, PORSCHE, VOLKSWAGEN

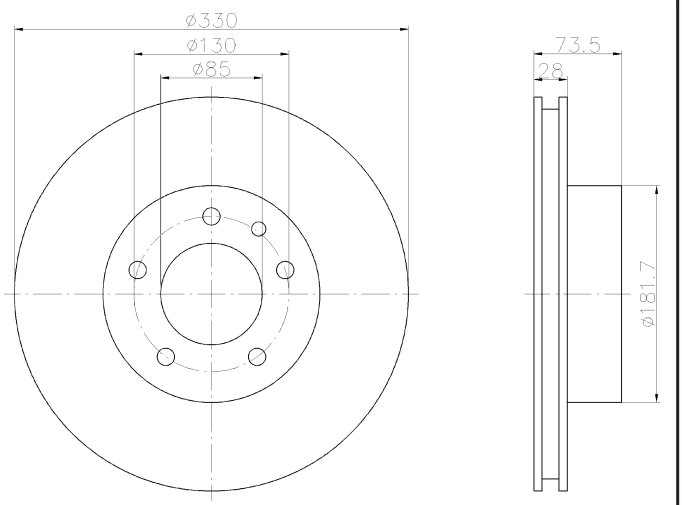

92122100

28

VOLKSWAGEN

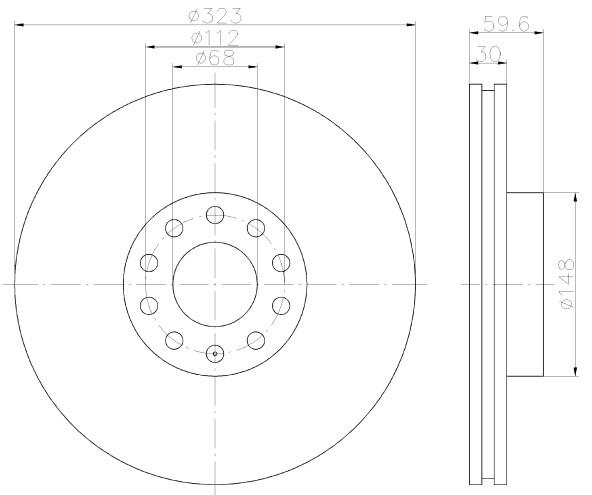

92122103

28 PRO

VOLKSWAGEN

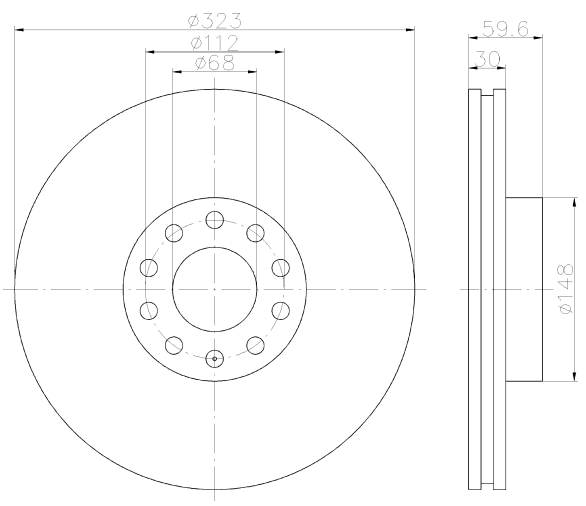

92122203

31 PRO

AUDI, VOLKSWAGEN

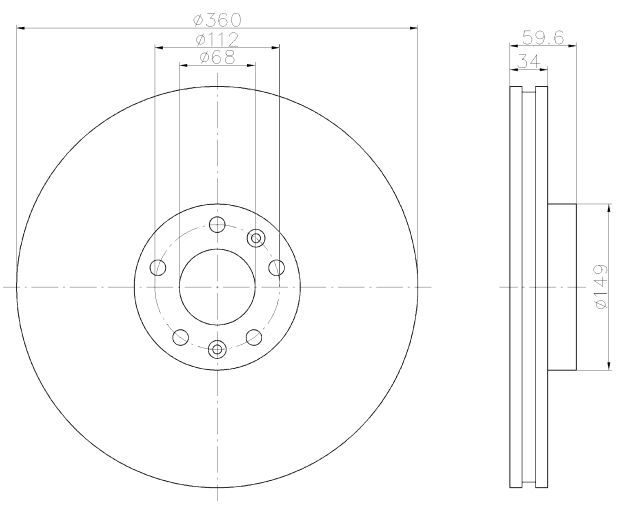

92122503

22.4 PRO

BMW, BMW (BRILLIANCE)

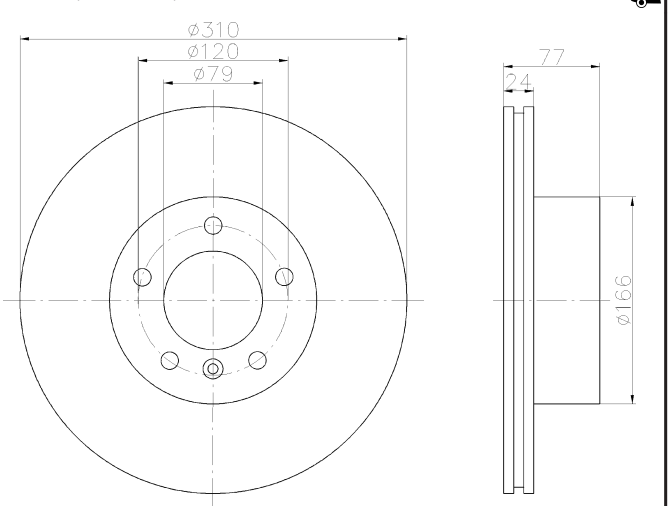

92122505

22.4 PRO

BMW, BMW (BRILLIANCE)

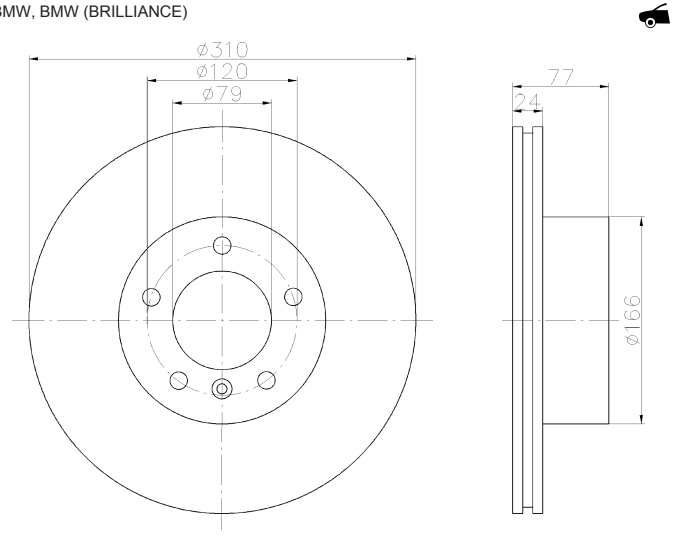

92122603

28.4 PRO

BMW, BMW (BRILLIANCE), HAFEI

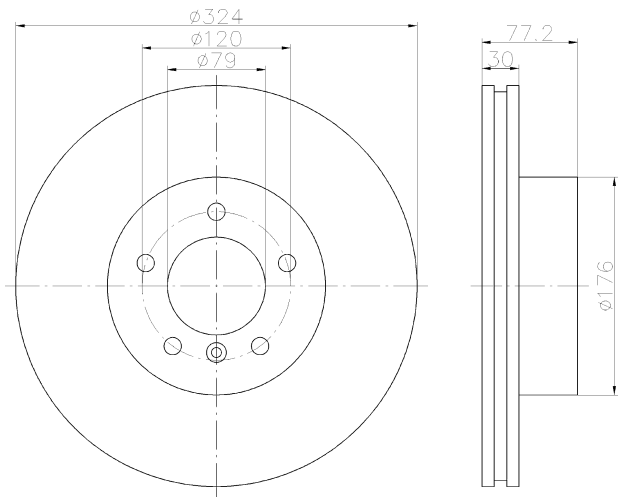

92122605

28.4 PRO

BMW, BMW (BRILLIANCE), HAFEI

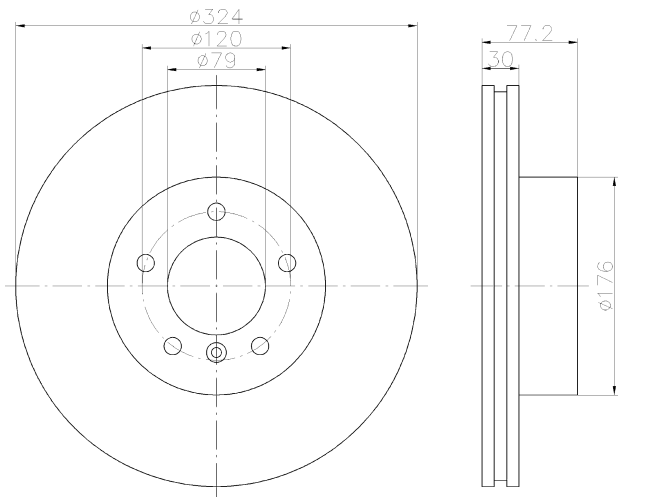

92122703

18.4 PRO

BMW, BMW (BRILLIANCE), HAFEI

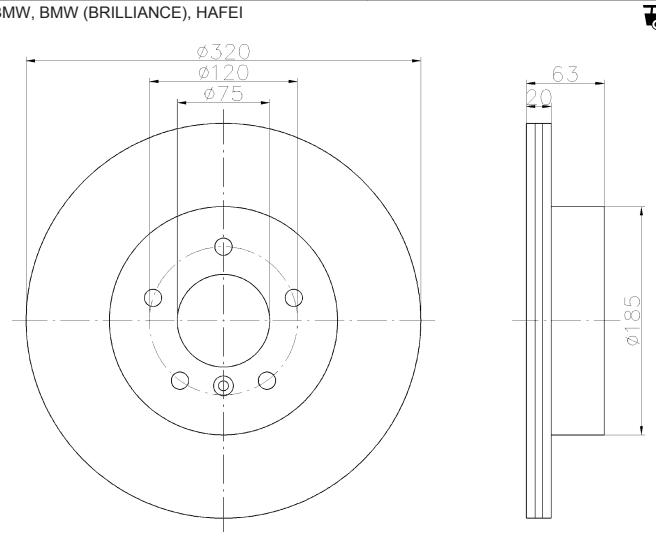

92122803

28.4 PRO

BMW

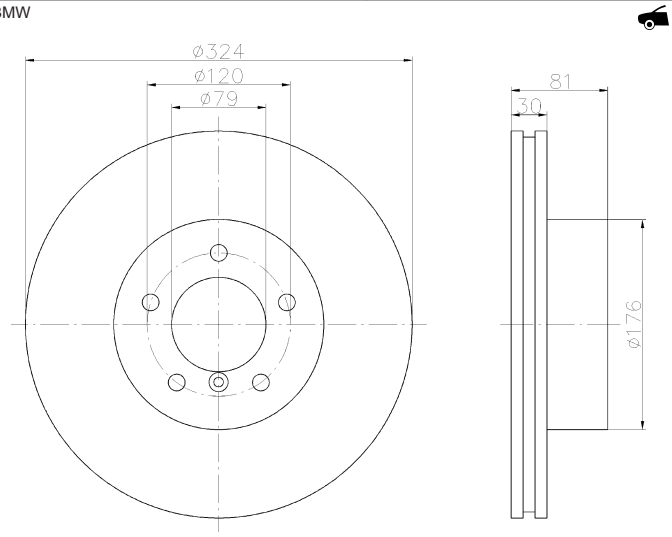

92122900

28.4

BMW

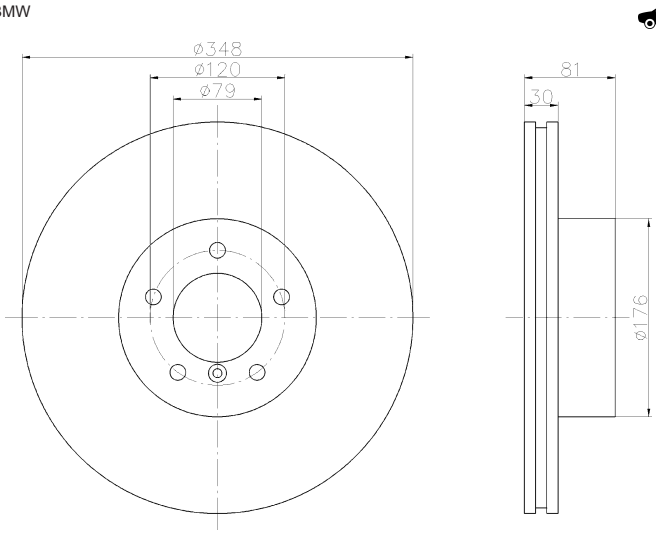

92122903

28.4 PRO

BMW

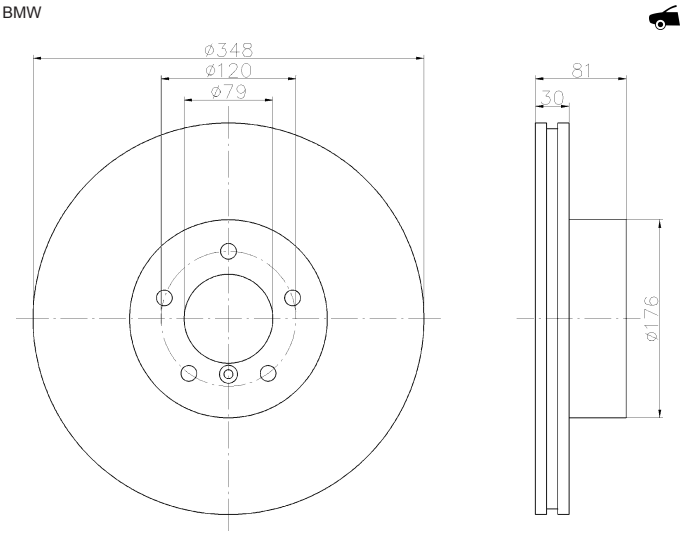

92122905

28.4 PRO

BMW

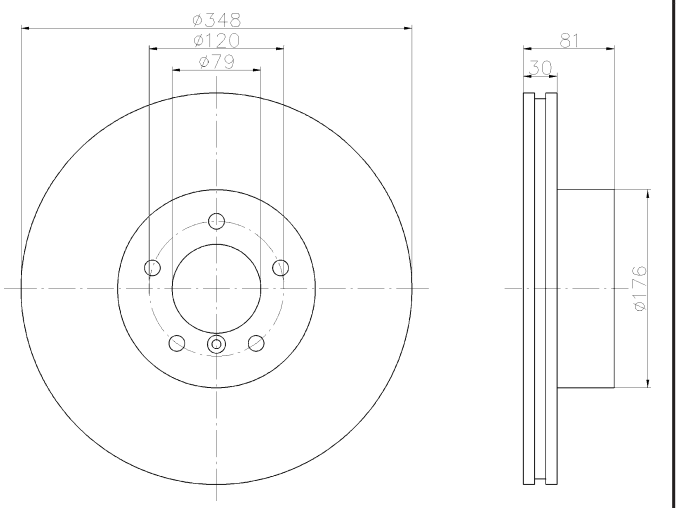

92123003

34.4 PRO

BMW

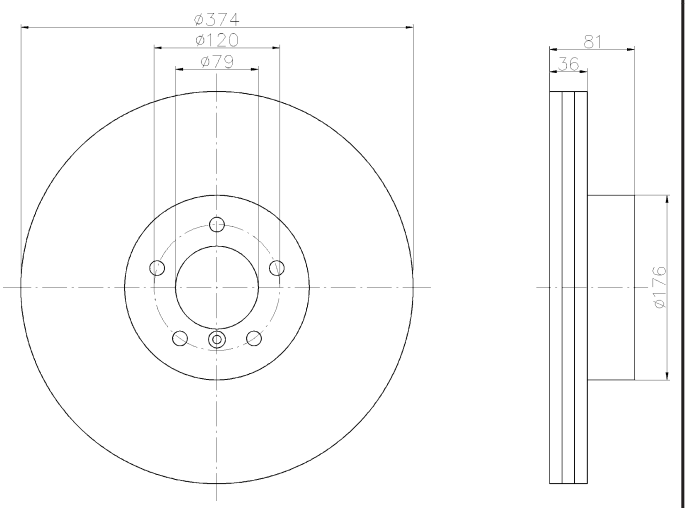

92123103

18.4 PRO

BMW

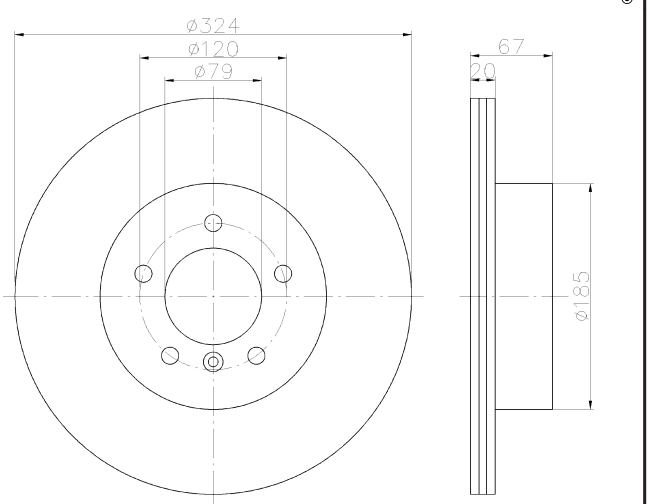

92123203

22.4 PRO

BMW

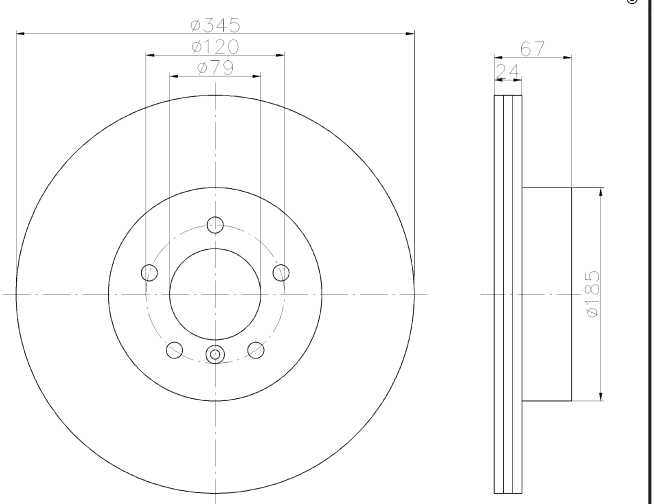

92123303

22.4 PRO

BMW

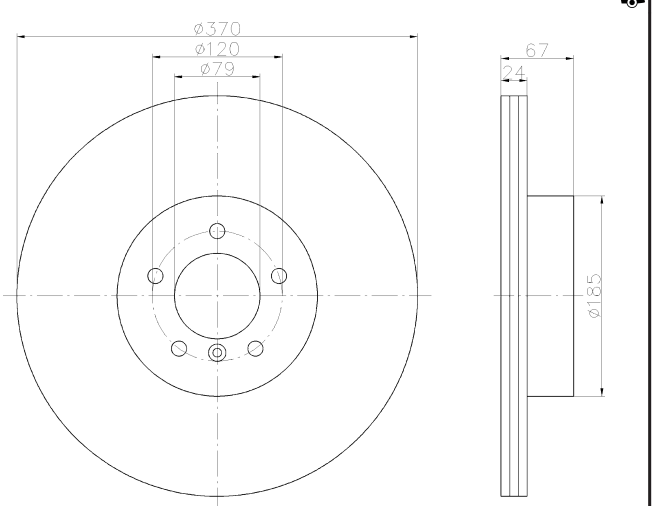

92123600

27.4

MERCEDES-BENZ

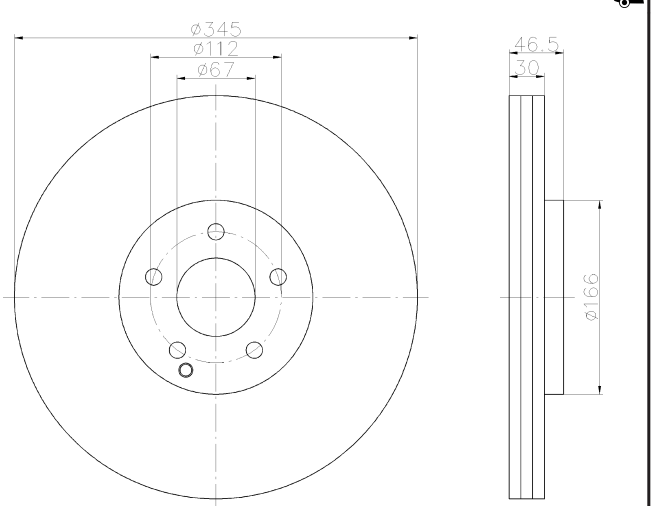

92123603

27.4 PRO

MERCEDES-BENZ

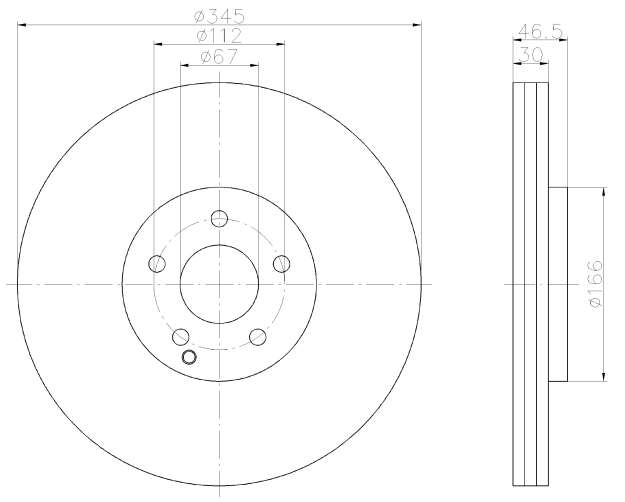

92123703

28 PRO

MERCEDES-BENZ

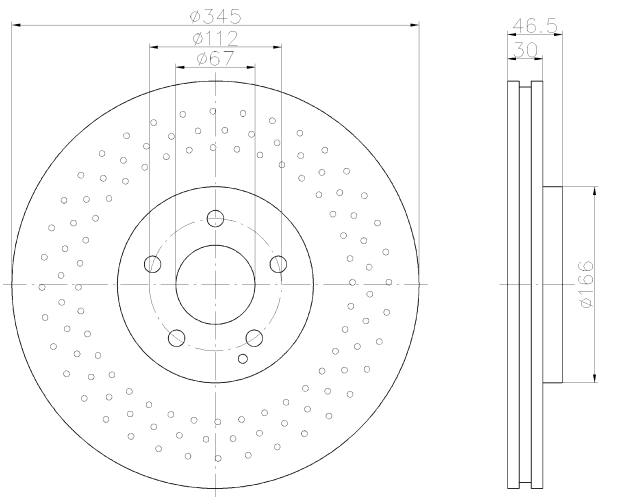

92123800

30

MERCEDES-BENZ

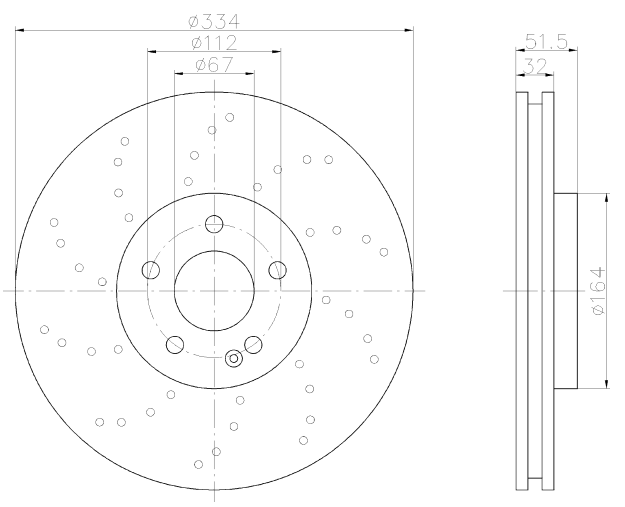

92123900

20

MERCEDES-BENZ

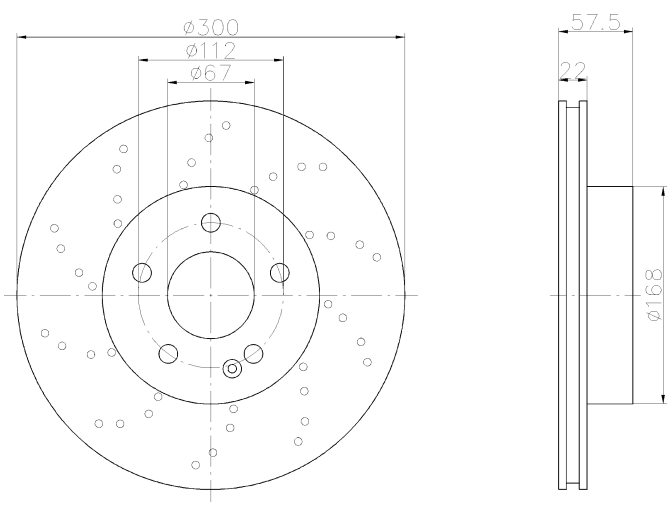

92124003

27.4 PRO

MERCEDES-BENZ

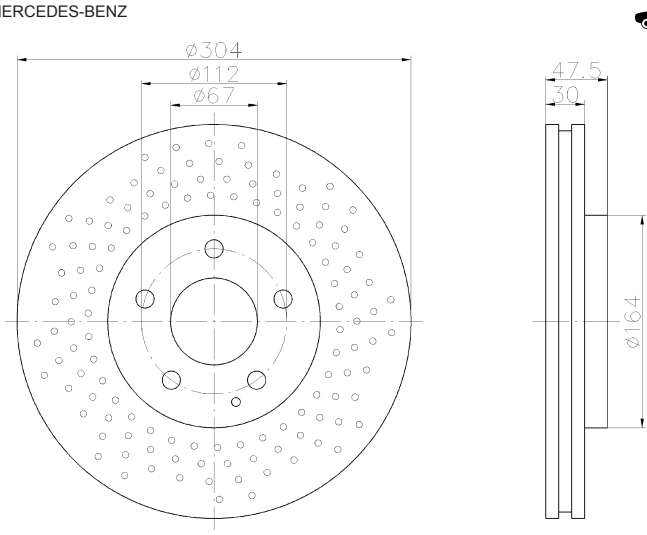

92124100

29.4

MERCEDES-BENZ

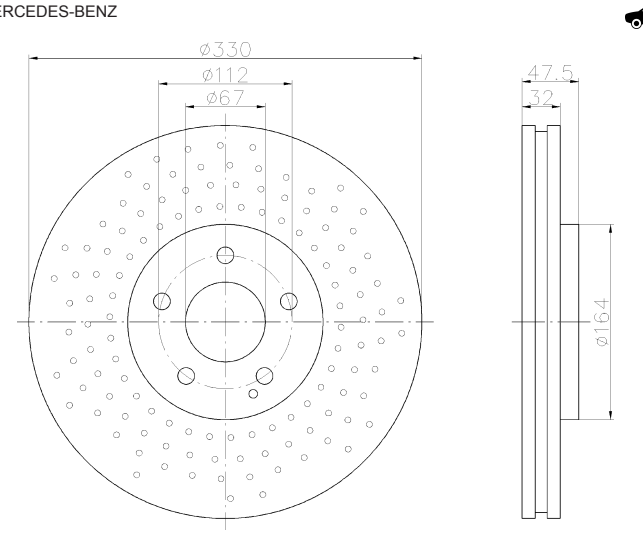

92124200

34

MERCEDES-BENZ

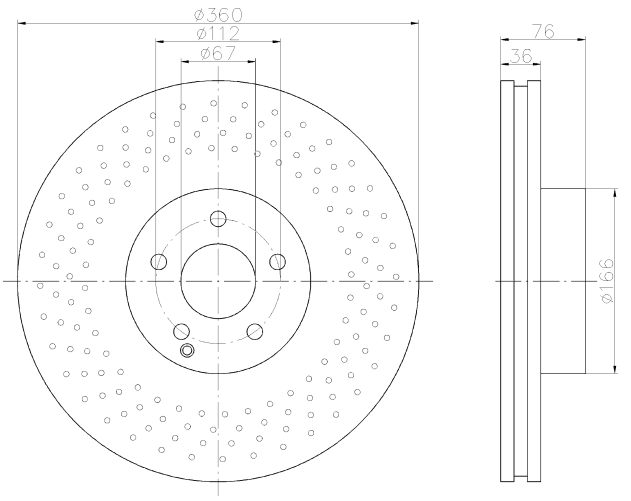

92124300

24

MERCEDES-BENZ

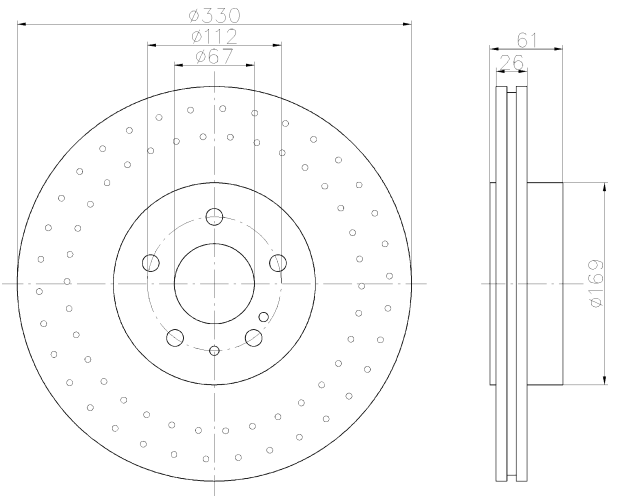

92124403

20 PRO

MERCEDES-BENZ

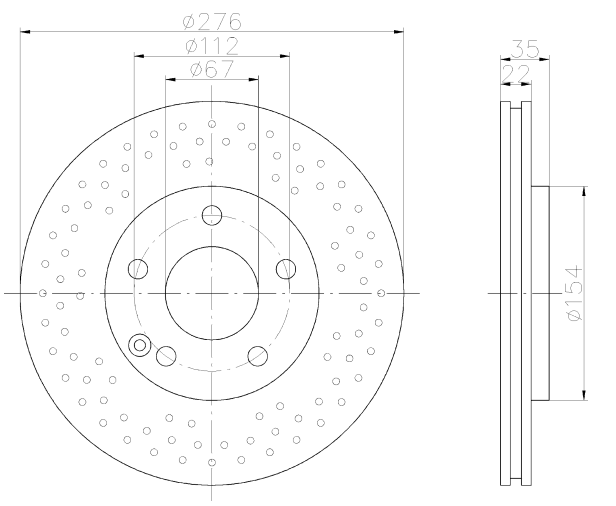

92124503

19 PRO

MERCEDES-BENZ

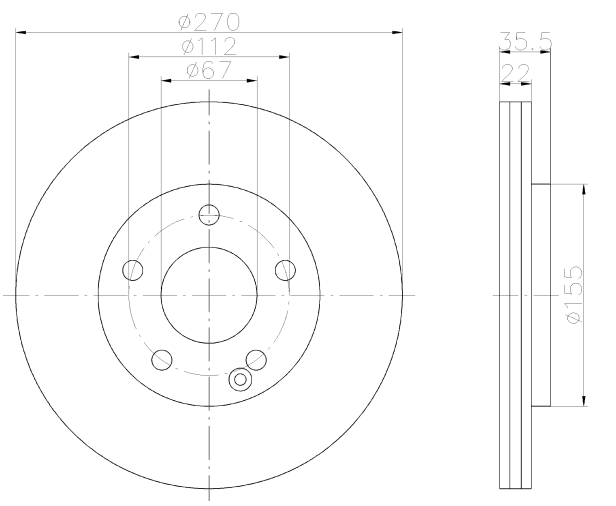

92124603

22 PRO

CHEVROLET, HOLDEN, OPEL, VAUXHALL

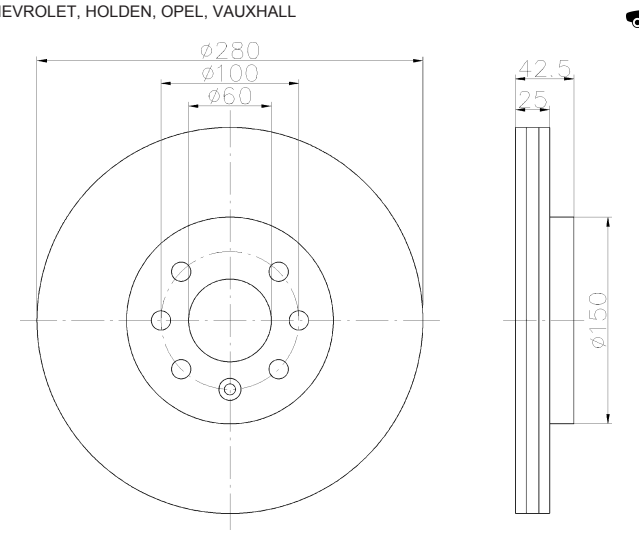

92124703

8 PRO

CHEVROLET, HOLDEN, OPEL, VAUXHALL

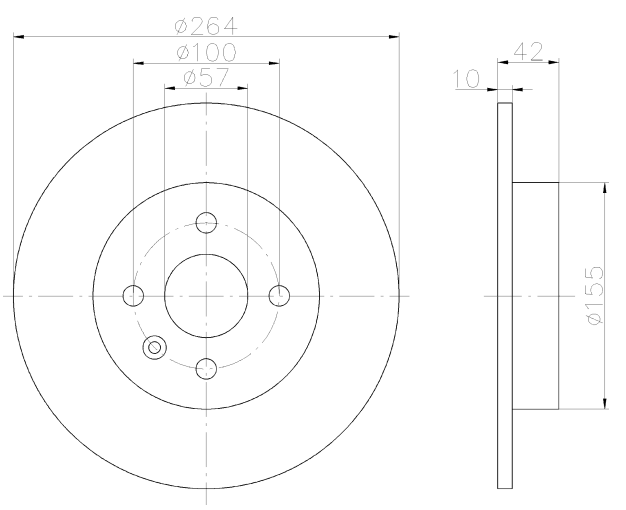

Illustrations

92124800

22

FORD

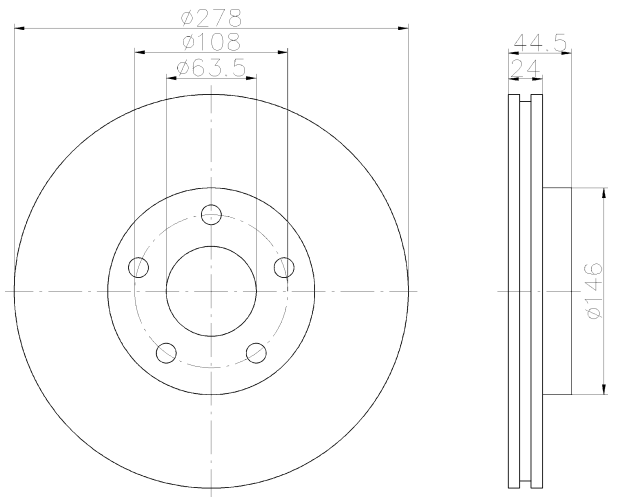

92124900

9

FORD

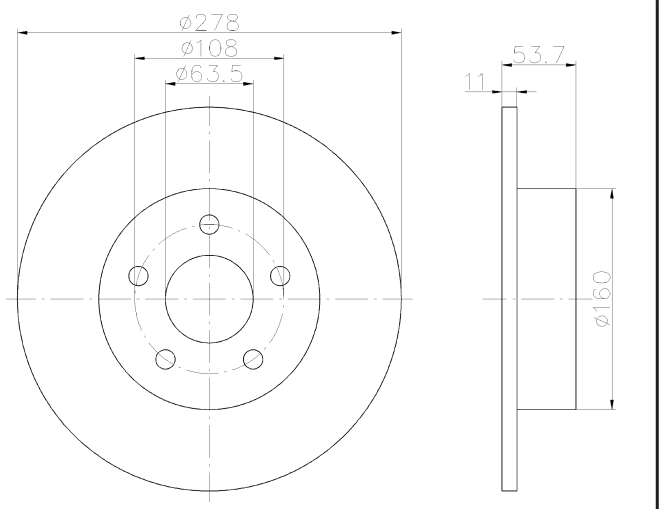

92125000

23

HONDA

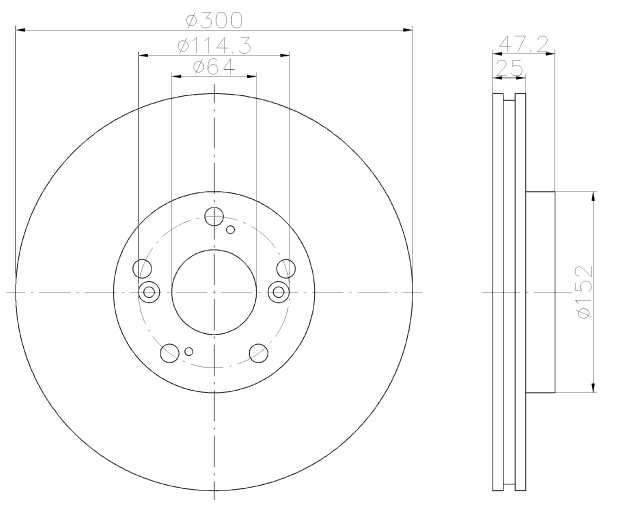

92125100

8

HONDA

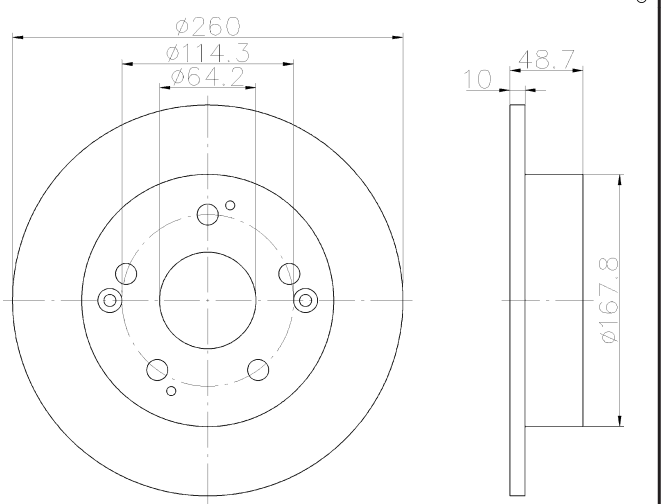

92125200

21

HONDA

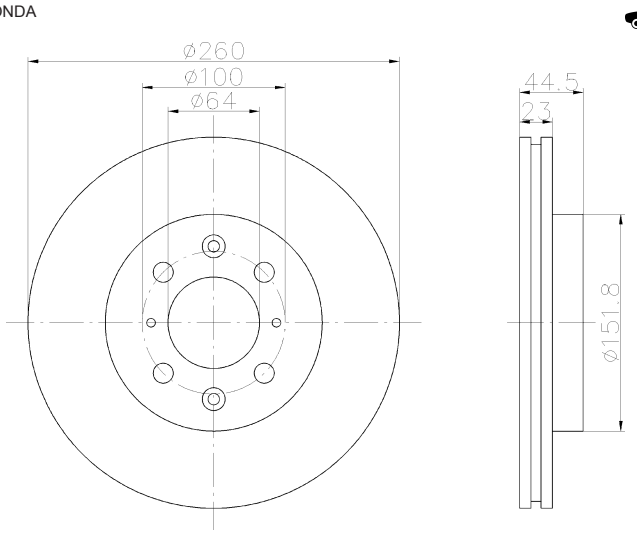

92125300

8

HONDA, MG

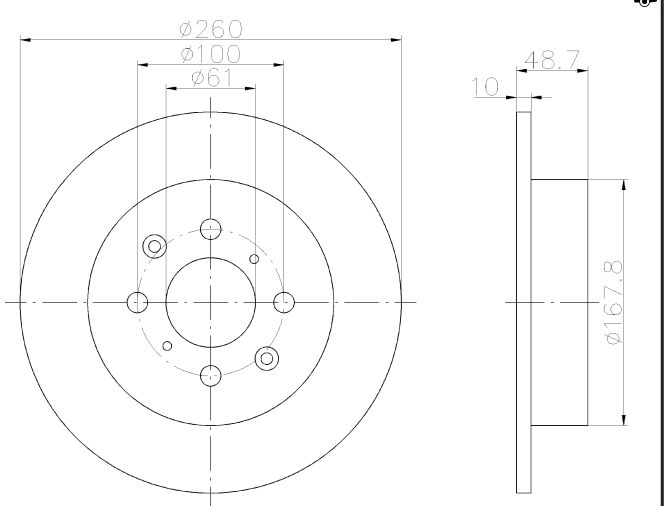

Illustrations

92125403

8 PRO

HONDA

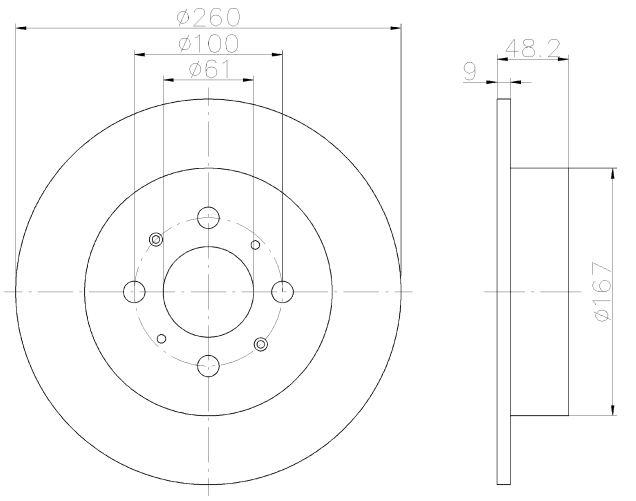

92125503

23 PRO

MAZDA

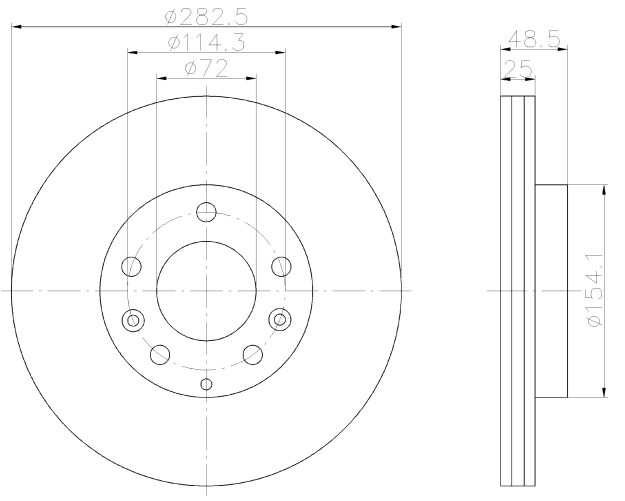

92125603

8 PRO

HONGQI, MAZDA, MAZDA (FAW), ZHONGHUA(BRILLIANCE)

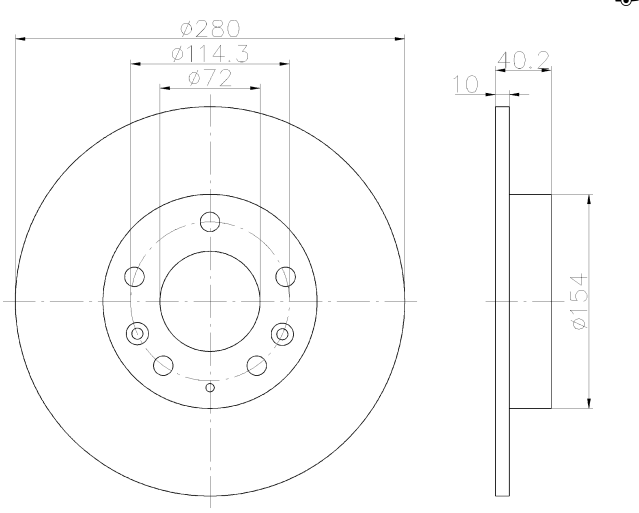

92125703

9 PRO

NISSAN

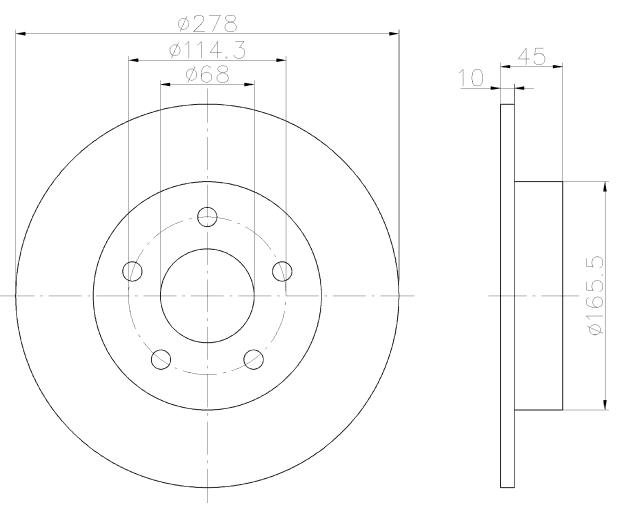

92125800

23

TOYOTA

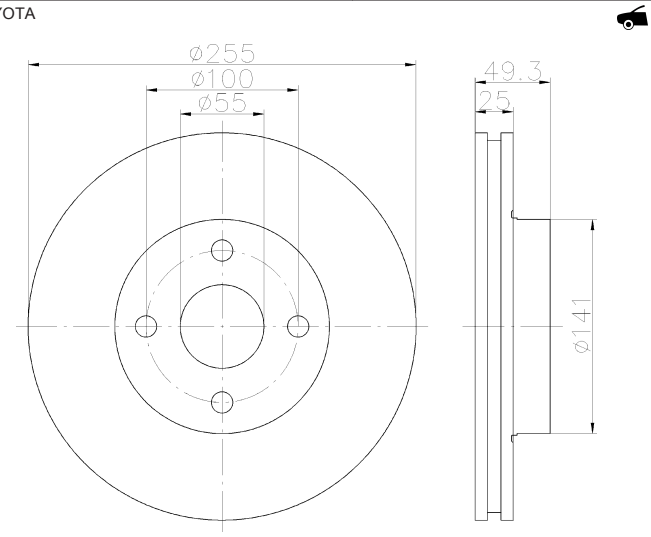

92125803

23 PRO

TOYOTA

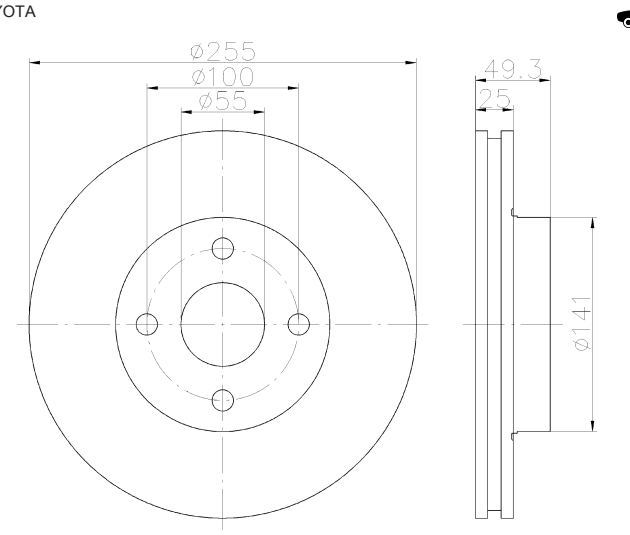

92125903

23 PRO

TOYOTA

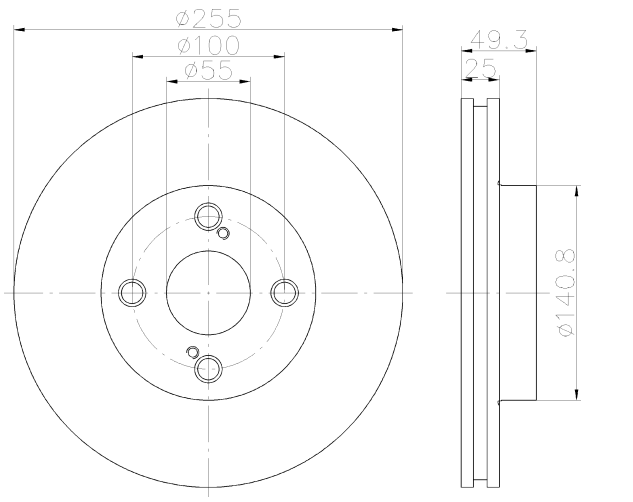

92126003

23 PRO

TOYOTA

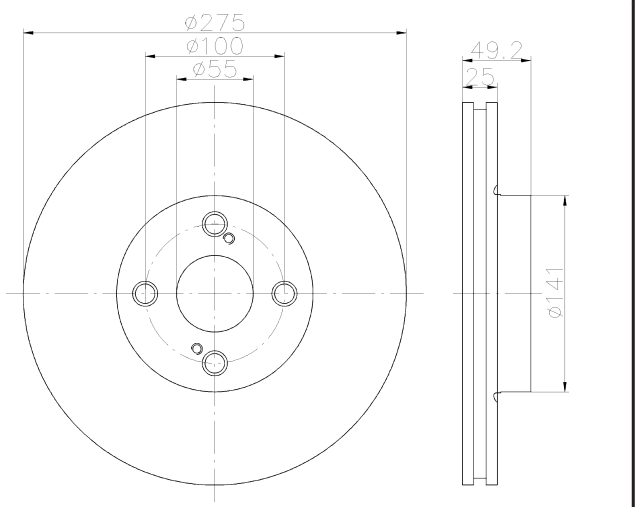

92126103

8 PRO

TOYOTA

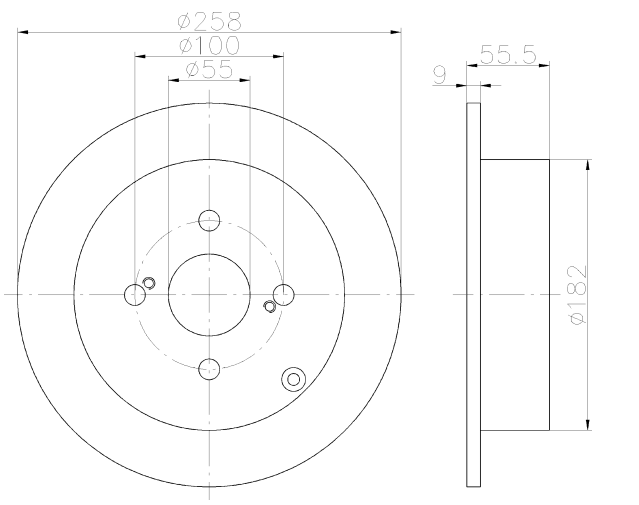

92126203

8 PRO

BYD, TOYOTA, TOYOTA (FAW)

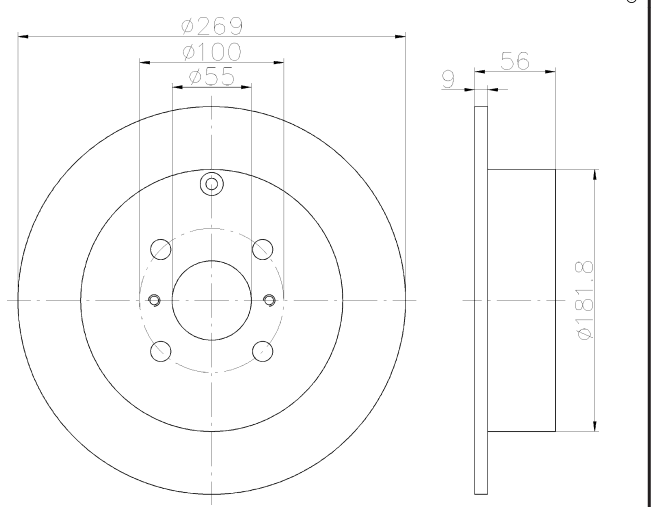

92126303

8 PRO

TOYOTA

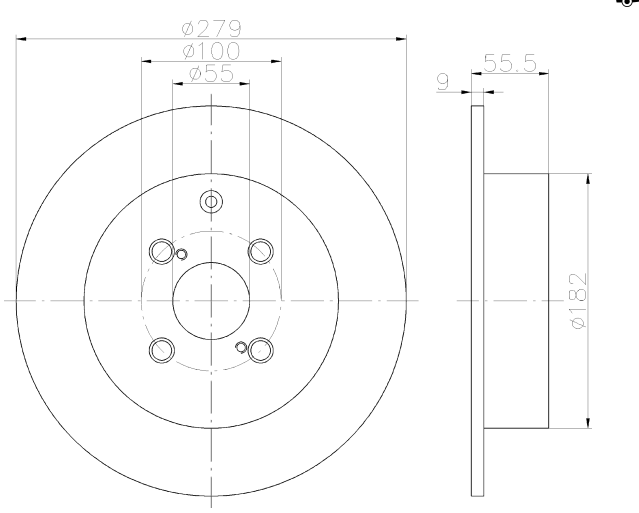

92126403

23 PRO

TOYOTA

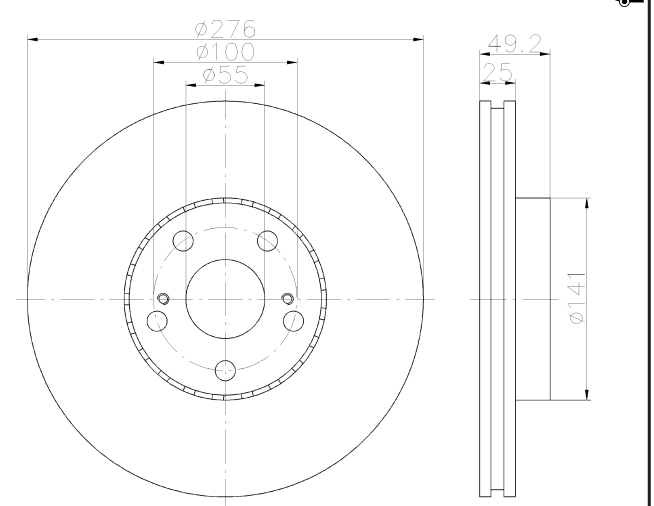

92126503

9 PRO

TOYOTA

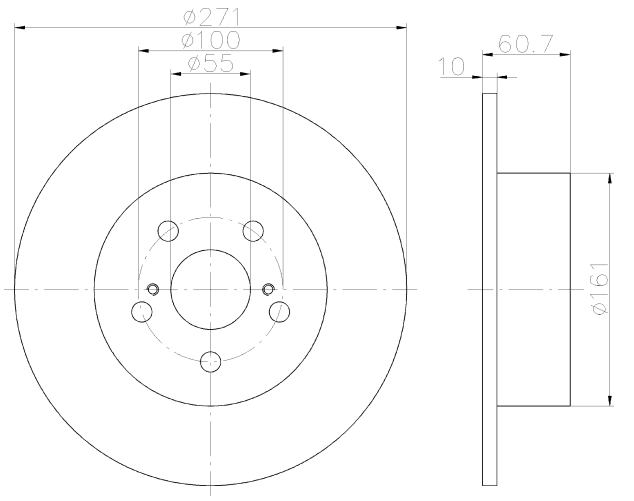

92126603

25 PRO

VOLVO

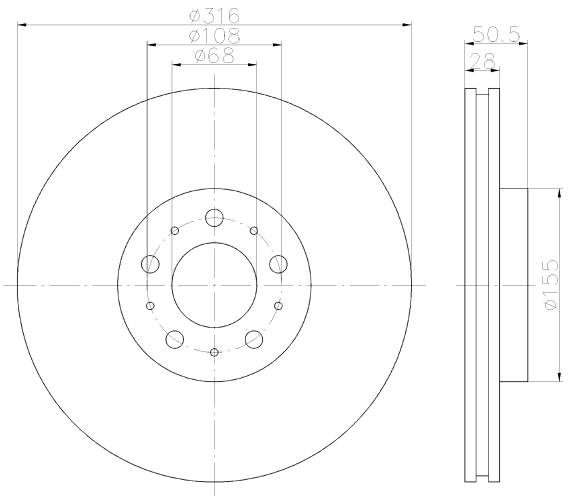

92126703

27 PRO

VOLVO

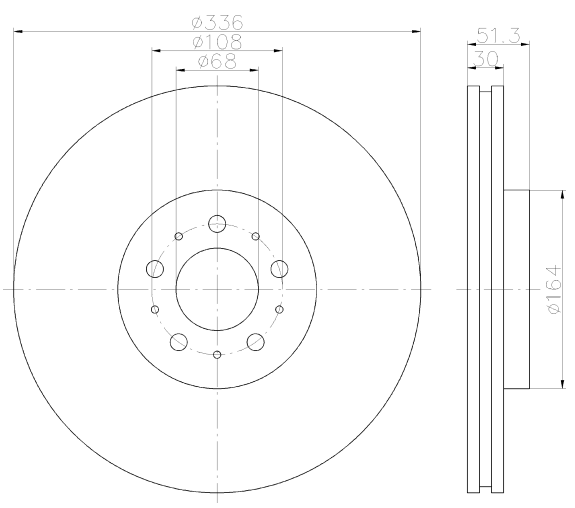

92126803

18 PRO

VOLVO

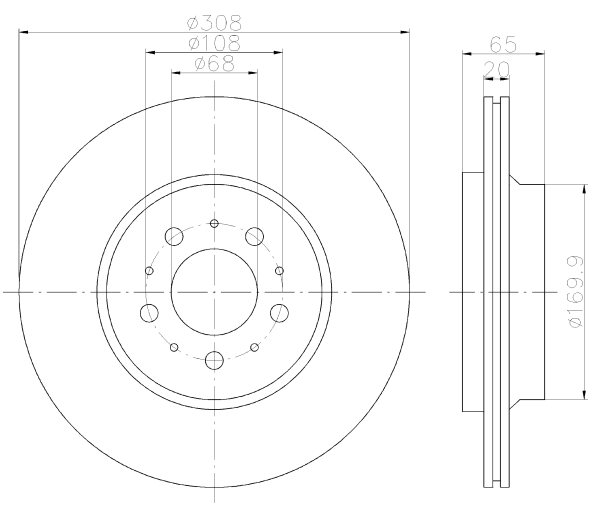

92128300

23

VOLKSWAGEN

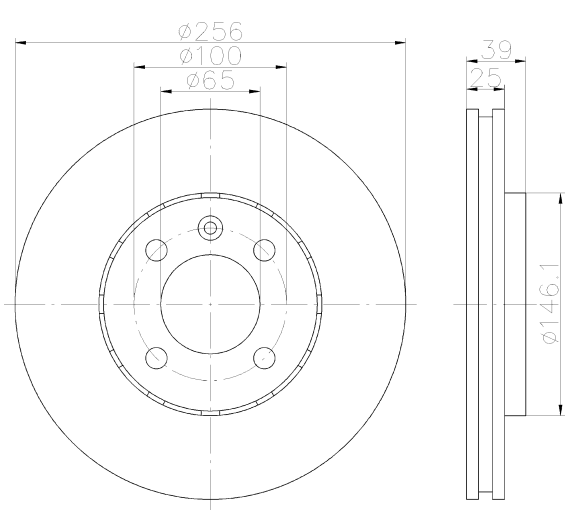

92128400

21

HONDA

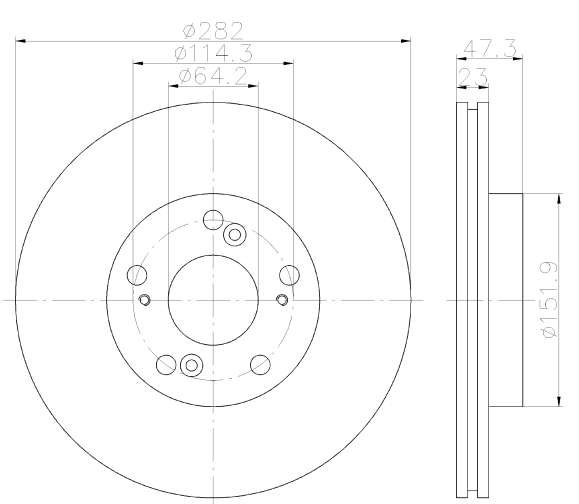

92128500

17

DODGE, HYUNDAI

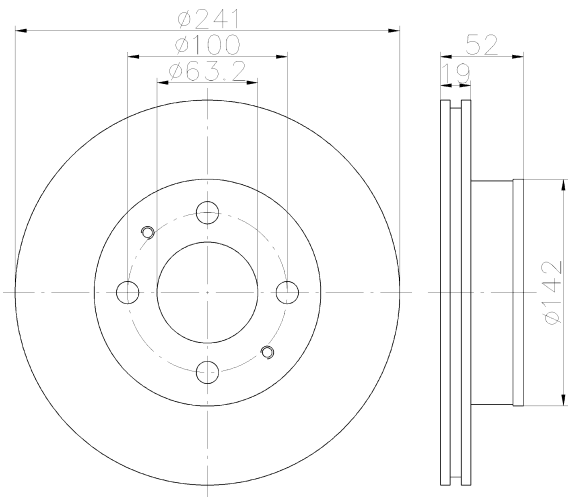

92128600

8.4

MITSUBISHI

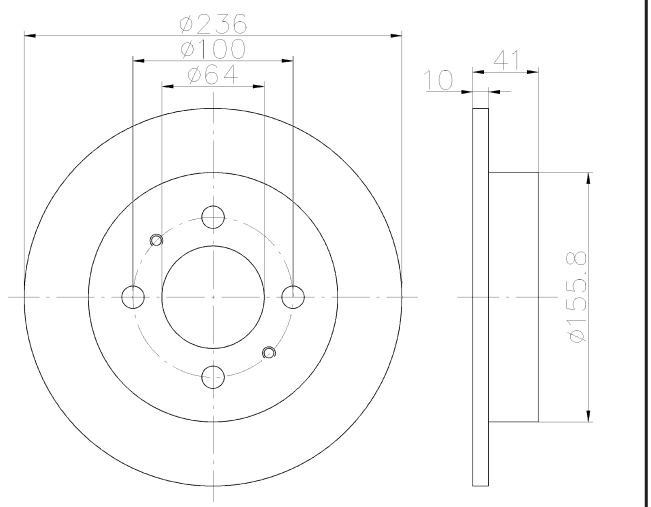

92128700

9

NISSAN

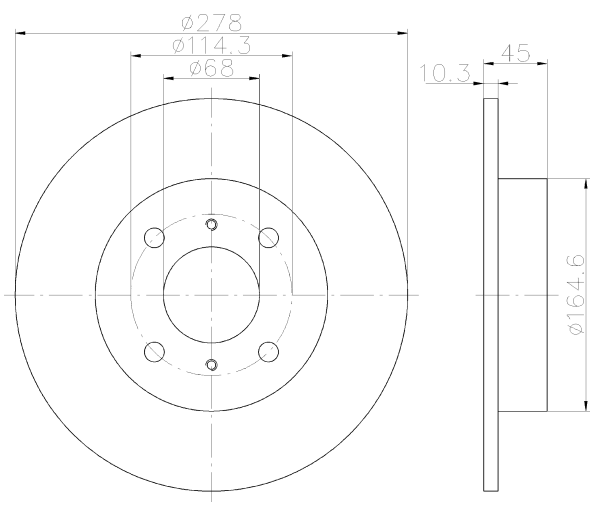

92128800

24.4

MITSUBISHI

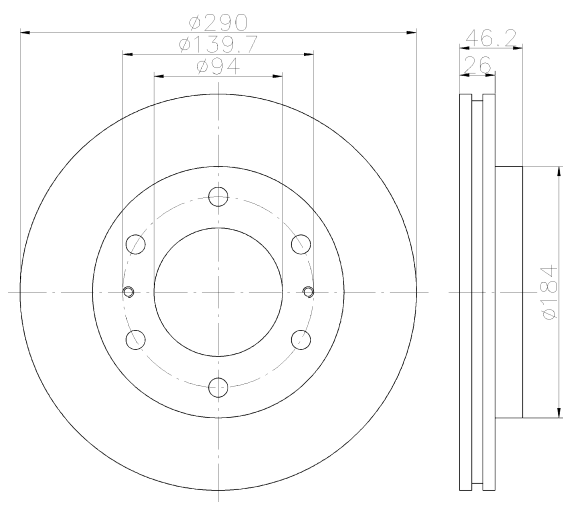

92128803

24.4 PRO

MITSUBISHI

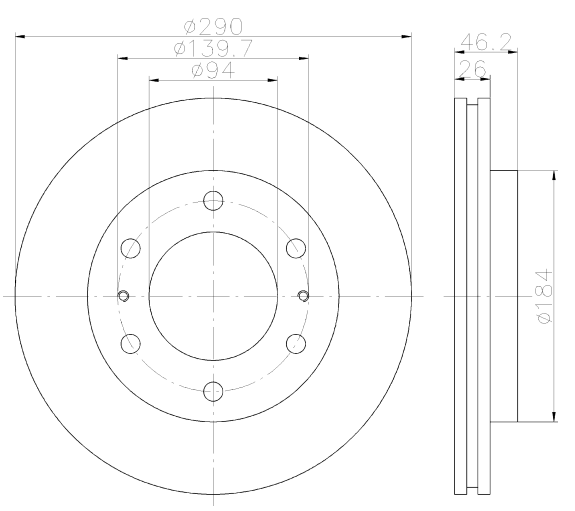

92128900

8

DAEWOO

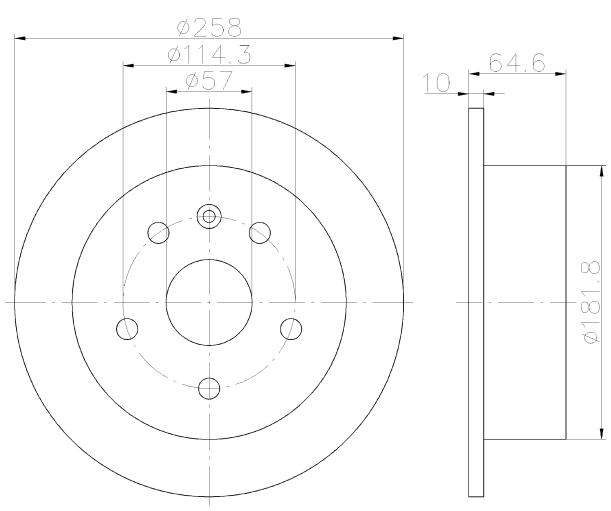

92129000

8

CHEVROLET, DAEWOO

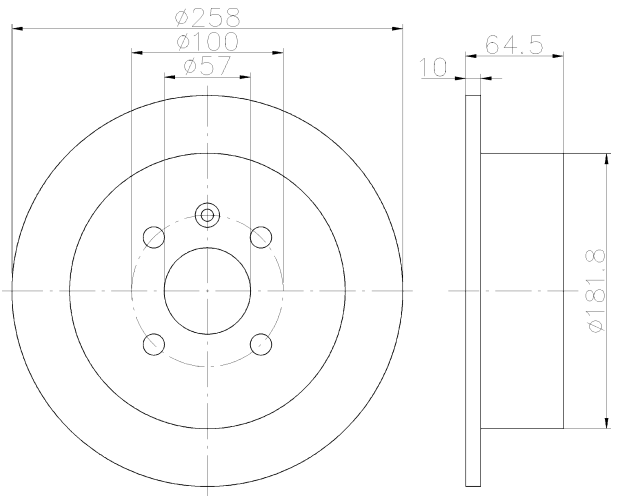

92129100

15

DAIHATSU, PERODUA, SUBARU, TOYOTA

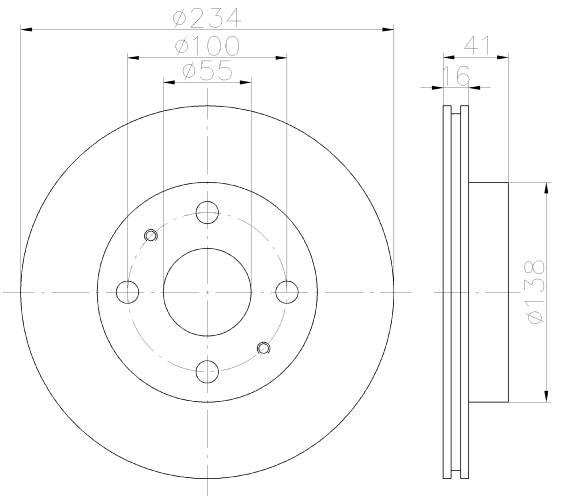

92129203

15 PRO

MERCEDES-BENZ

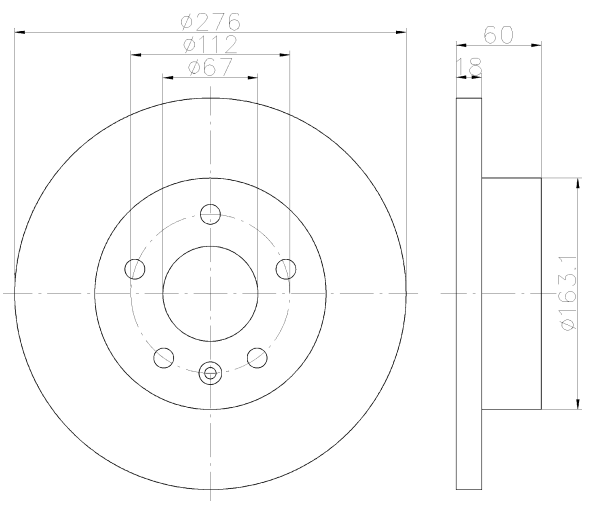

92129303

22 PRO

HOLDEN, OPEL, VAUXHALL

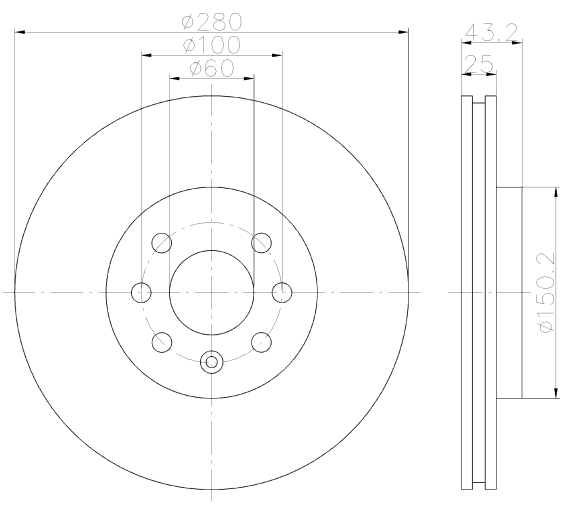

92129503

28 PRO

CITROËN, PEUGEOT

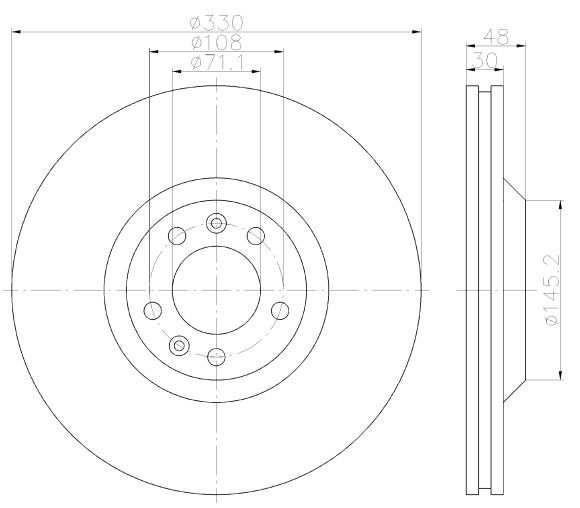

92129603

10 PRO

CITROËN, PEUGEOT

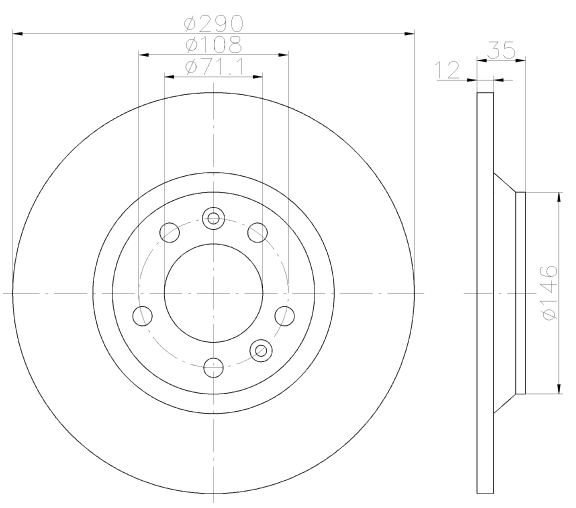

92129700

22

LAND ROVER

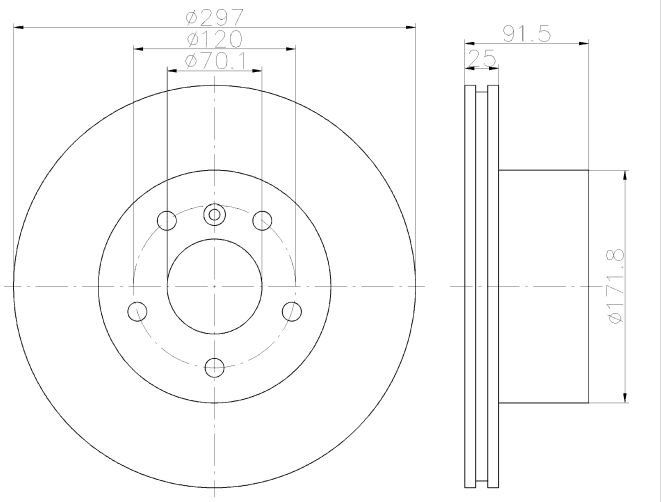

92129800

20

NISSAN

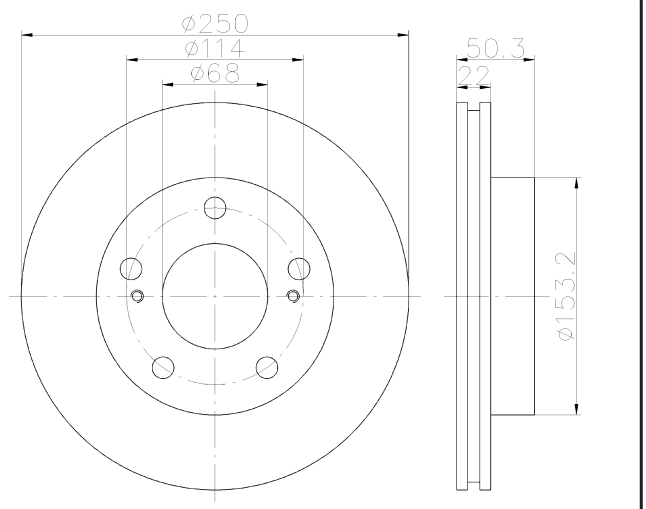

92129900

16

NISSAN

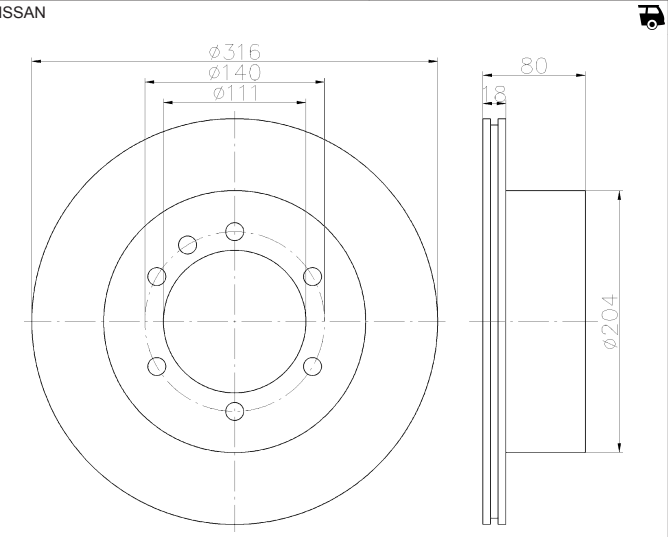

92130000

26

MAZDA

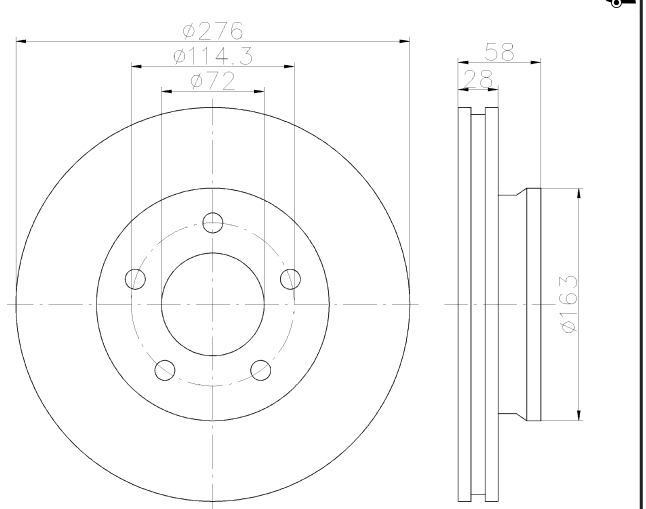

92130100

16

MAZDA

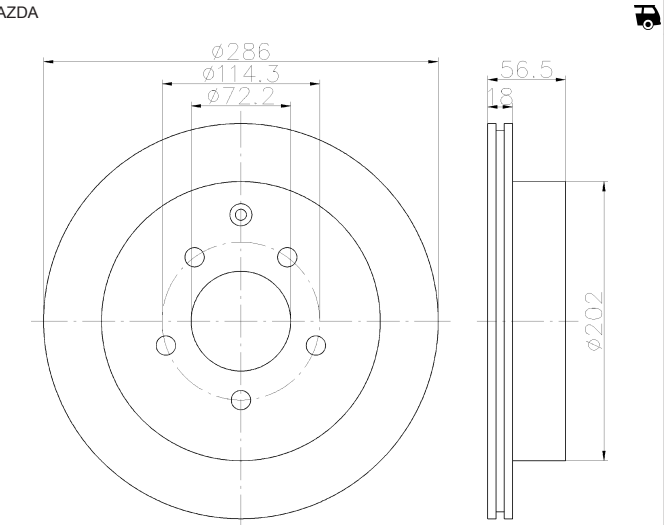

92130200

8

FORD AUSTRALIA, MAZDA

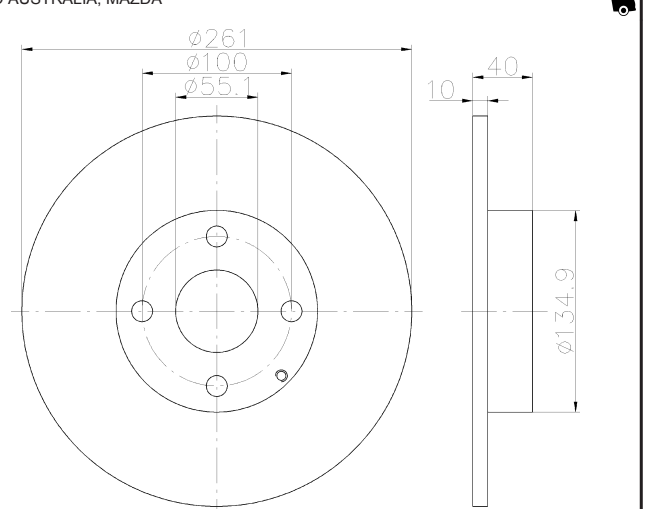

92130303

23 PRO

MAZDA, MAZDA (CHANGAN)

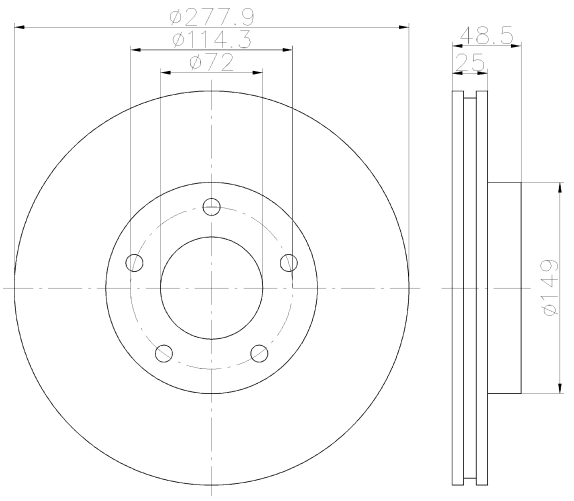

92130400

23

MAZDA, MAZDA (CHANGAN)

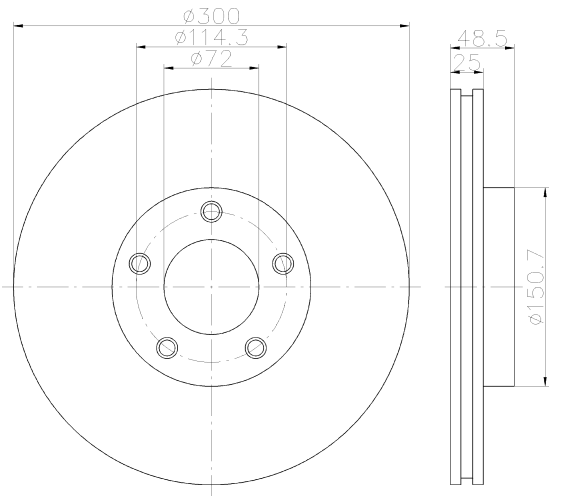

92130500

9

MAZDA, MAZDA (CHANGAN)

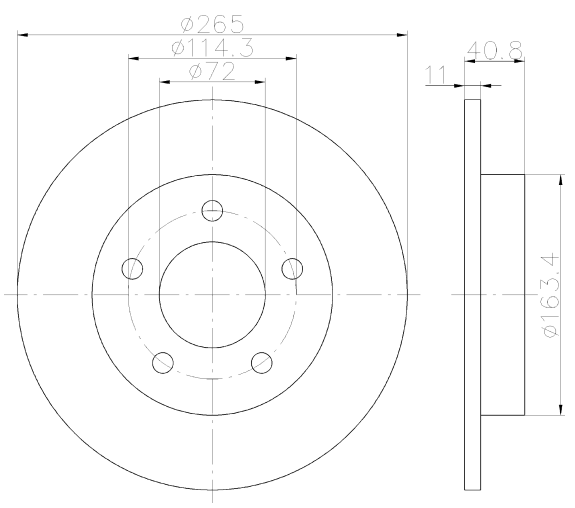

92130600

9

MAZDA, MAZDA (CHANGAN)

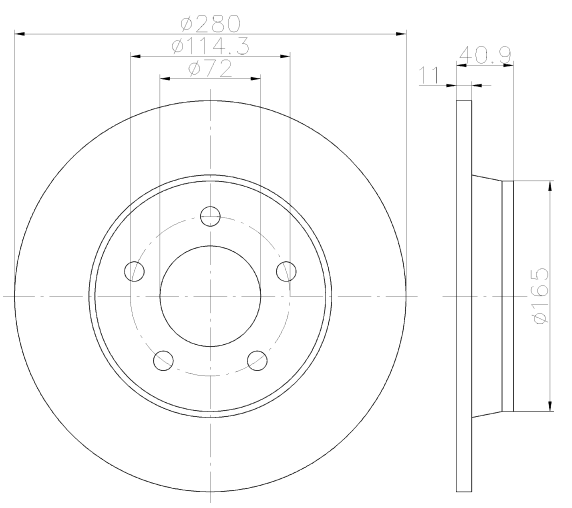

92130700

17

HYUNDAI

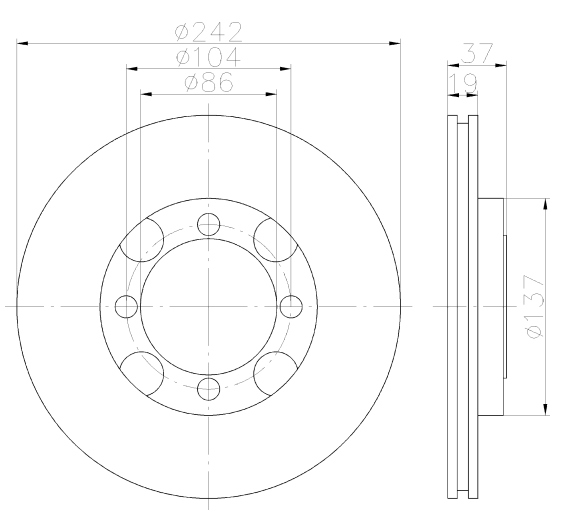

92130800

22

HYUNDAI

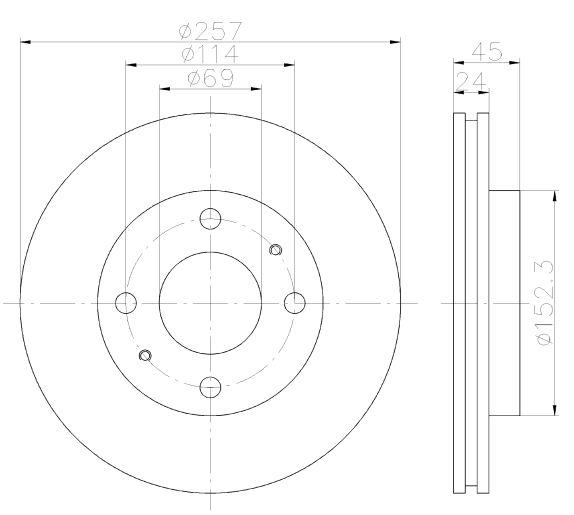

92130900

8.4

HYUNDAI, KIA

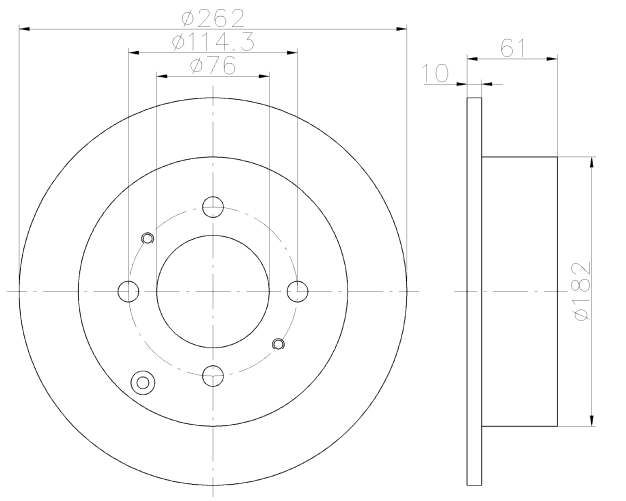

92131000

24.4

HYUNDAI

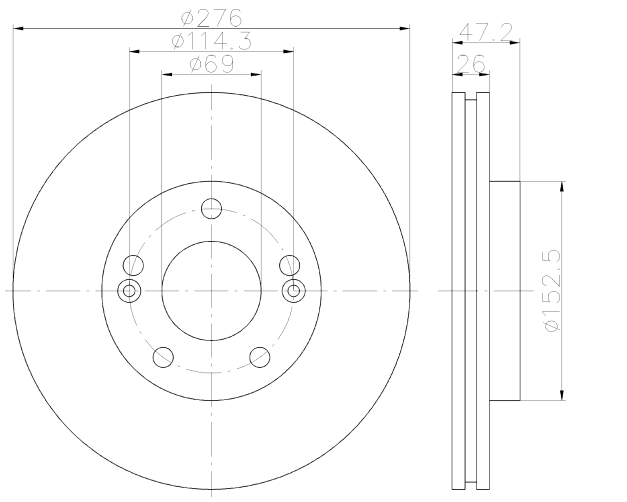

92131100

22

KIA

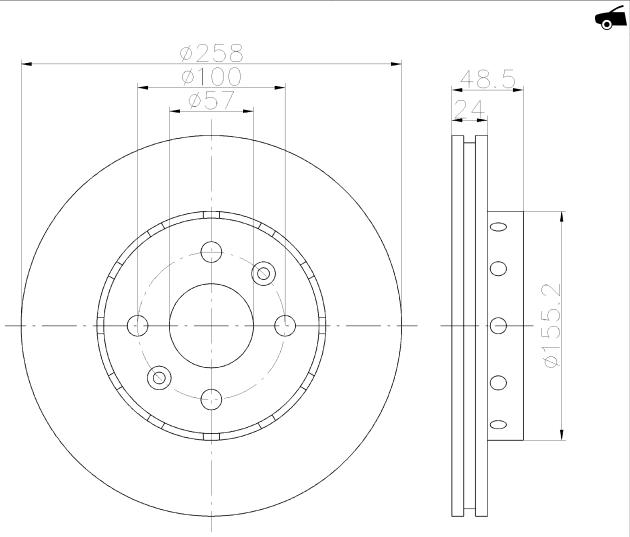

92131200

15

CHEVROLET, SUZUKI

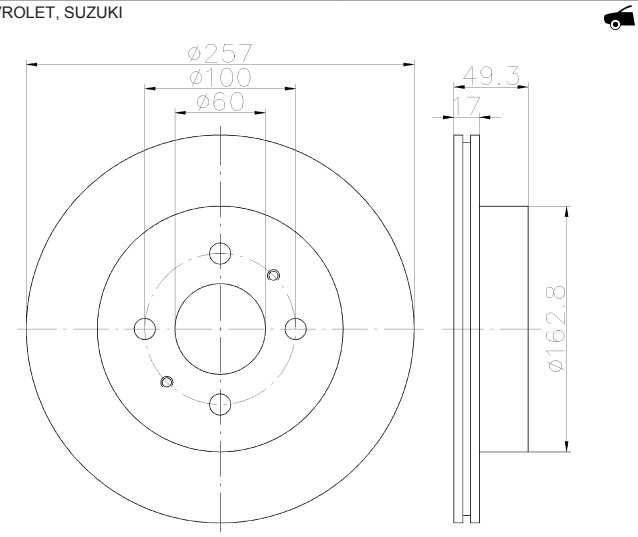

92131503

19 PRO

MERCEDES-BENZ, VOLKSWAGEN

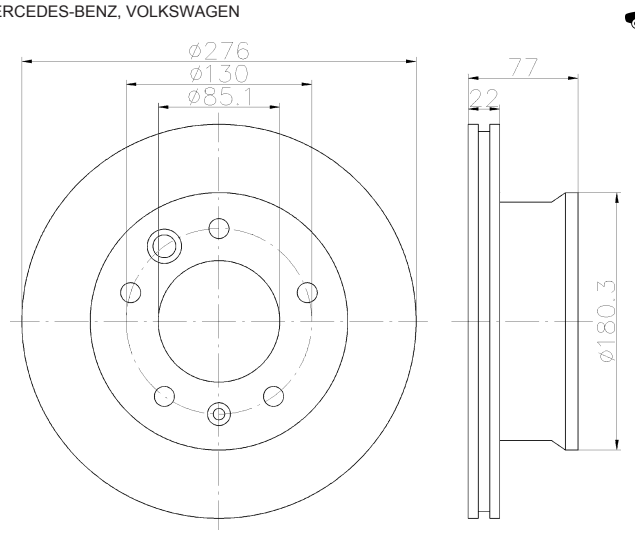

92131700

24

KIA

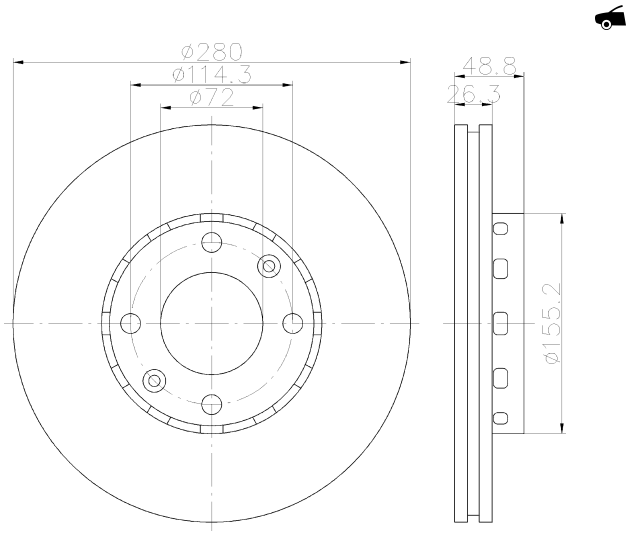

92131803

10 PRO

MERCEDES-BENZ

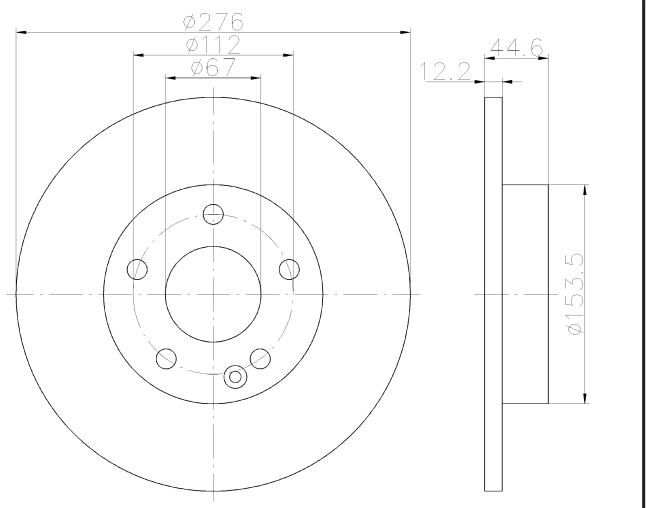

92131903

19.4 PRO

MERCEDES-BENZ

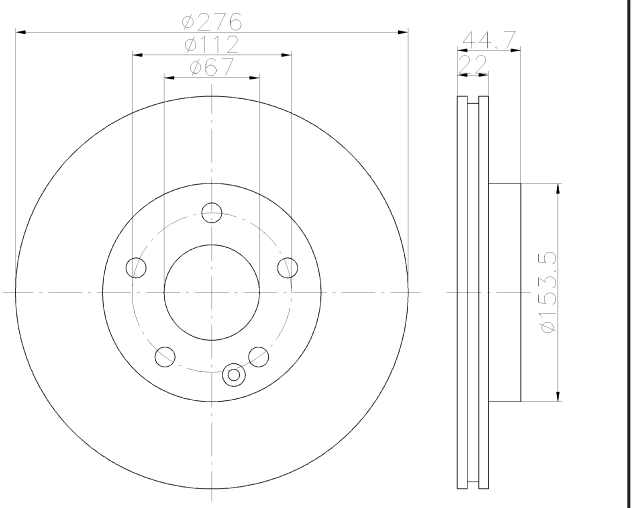

92132003

22.4 PRO

MERCEDES-BENZ

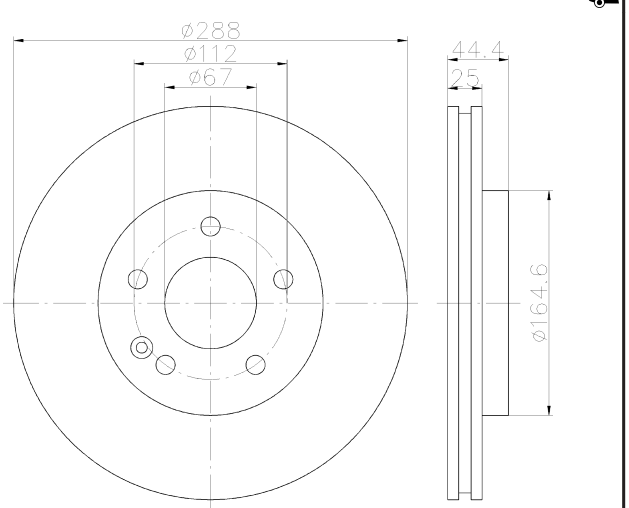

92132103

7 PRO

MERCEDES-BENZ

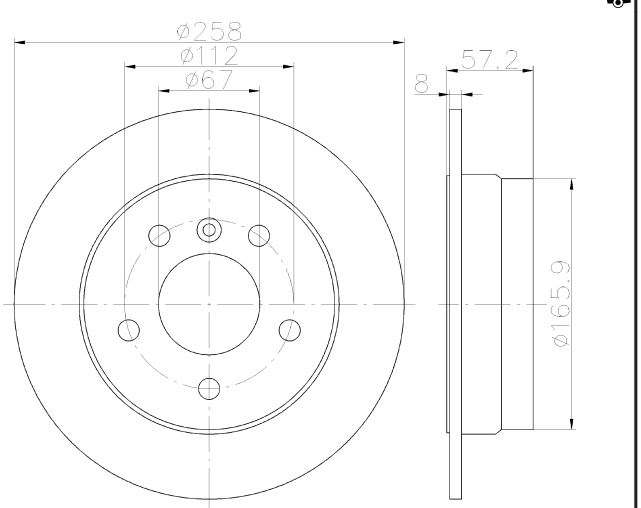

92132200

23

AUDI

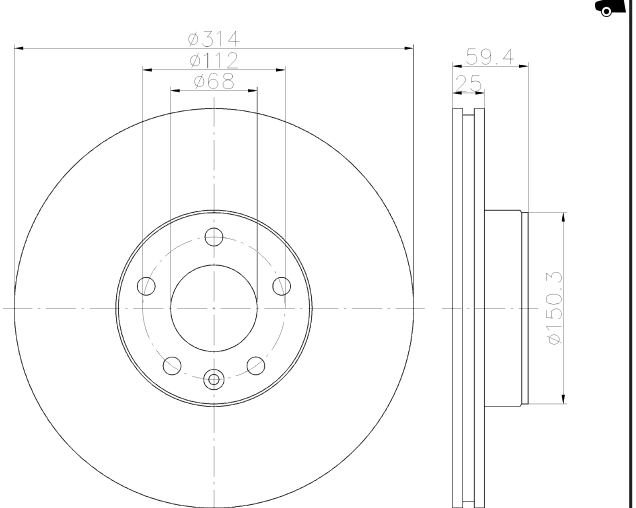

92132203

23 PRO

AUDI

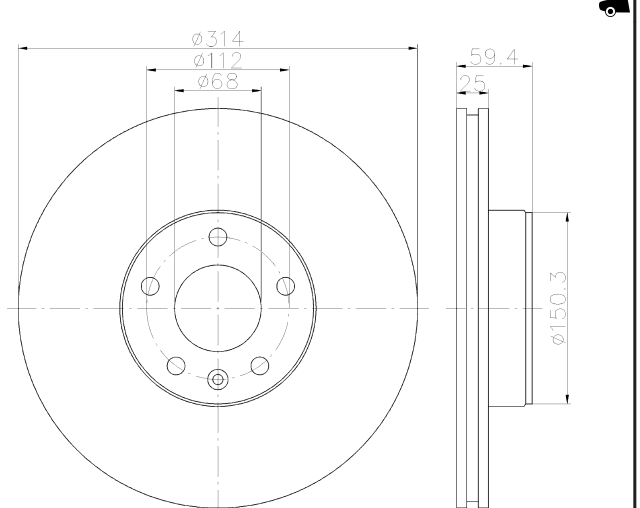

92132205

23 PRO

AUDI

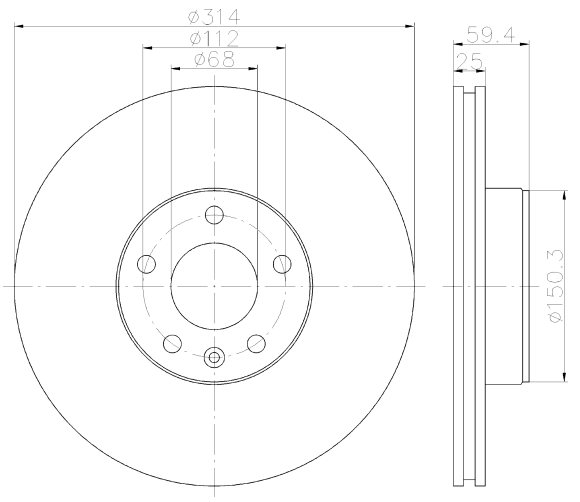

92132300

28

AUDI, AUDI (FAW)

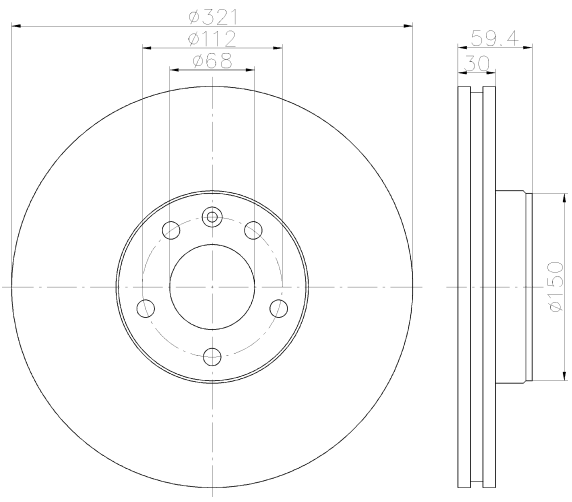

92132305

28 PRO

AUDI, AUDI (FAW)

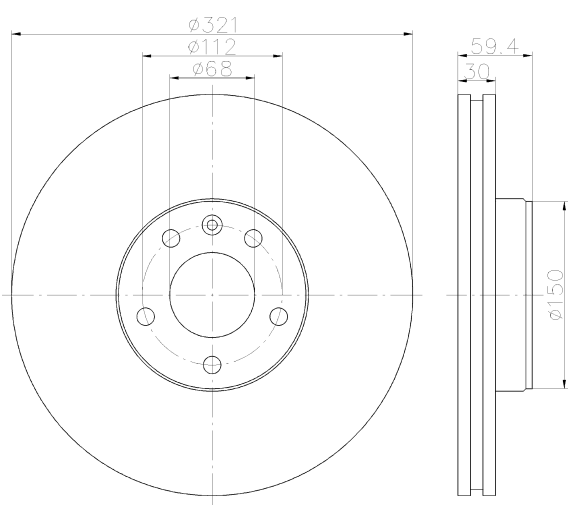

92132400

28

AUDI, AUDI (FAW)

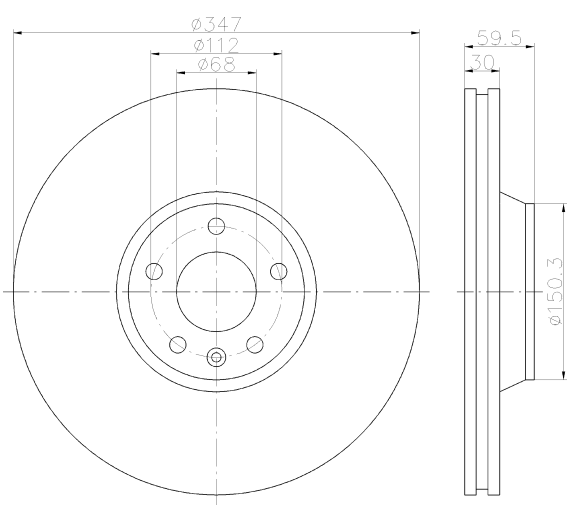

92132405

28 PRO

AUDI, AUDI (FAW)

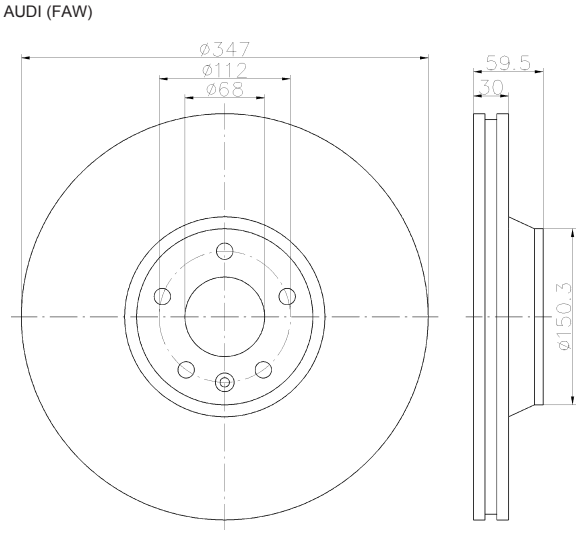

92132503

10 PRO

AUDI, AUDI (FAW), BUICK (SGM), BYD

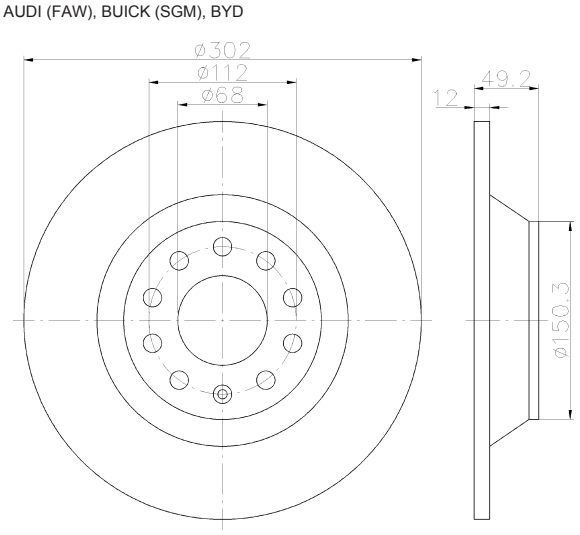

92132603

20 PRO

AUDI, AUDI (FAW)

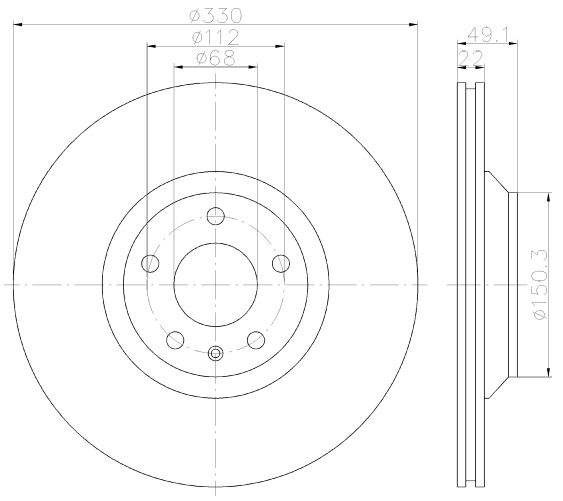

92132703

20.4 PRO

BMW

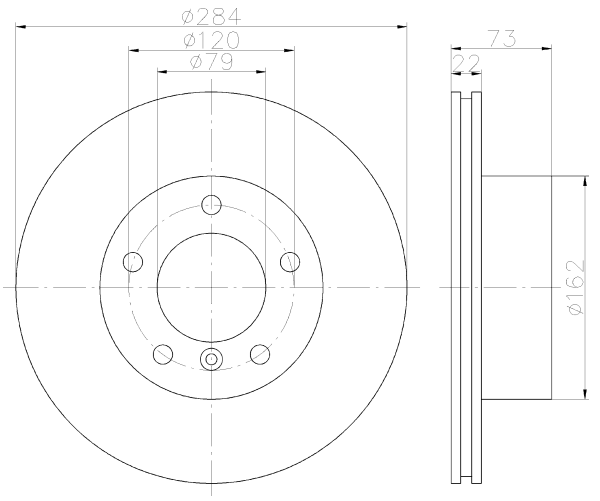

92132803

20.4 PRO

BMW, BMW (BRILLIANCE)

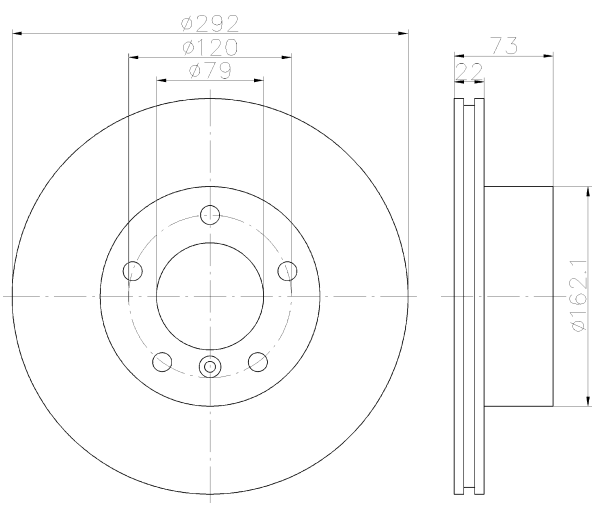

92132805

20.4 PRO

BMW, BMW (BRILLIANCE)

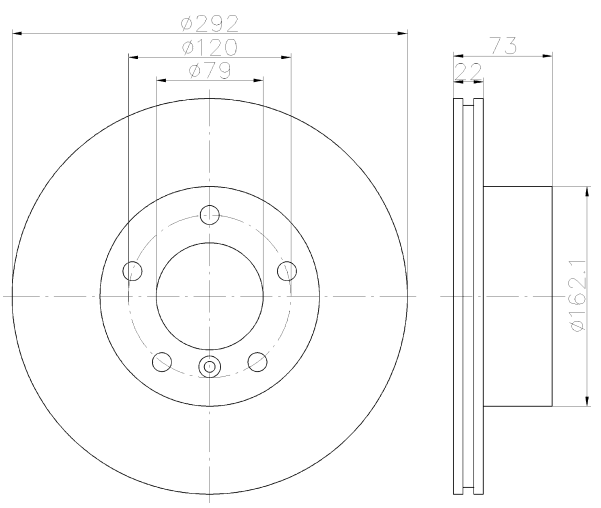

92132903

8.4 PRO

BMW

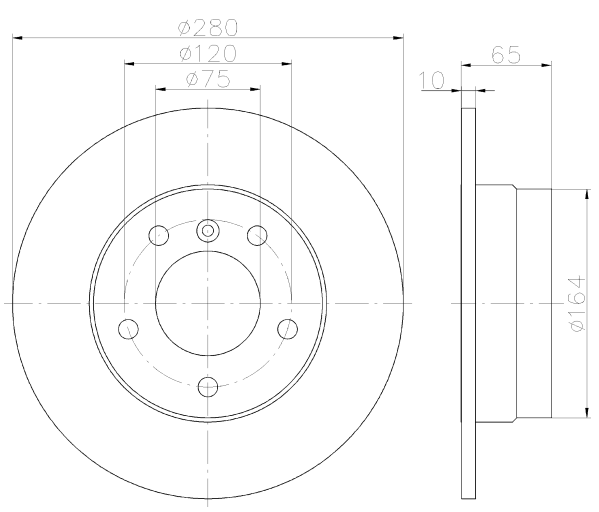

92133003

18.4 PRO

BMW

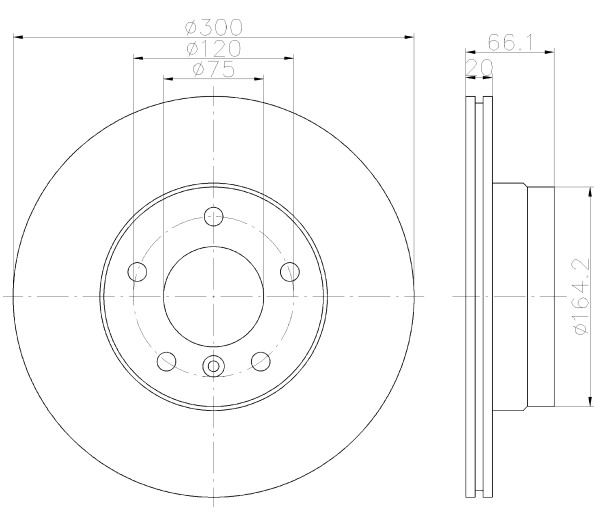

92133103

8.9 PRO

BMW

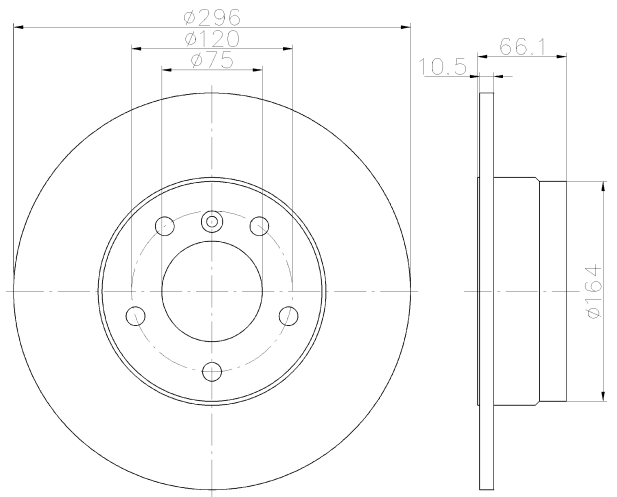

92133203

24.8 PRO

CITROËN, PEUGEOT

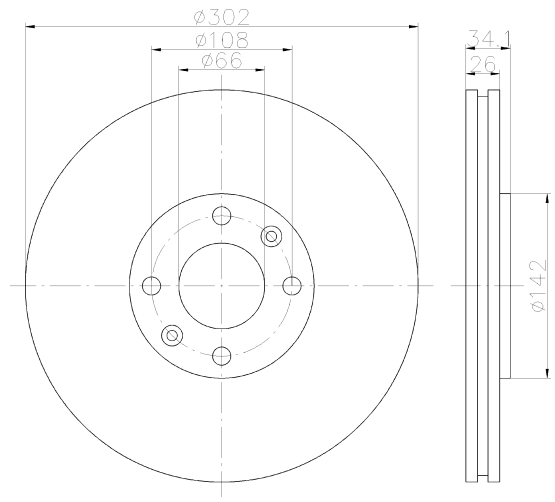

92133300

8 ABS

CITROËN, PEUGEOT

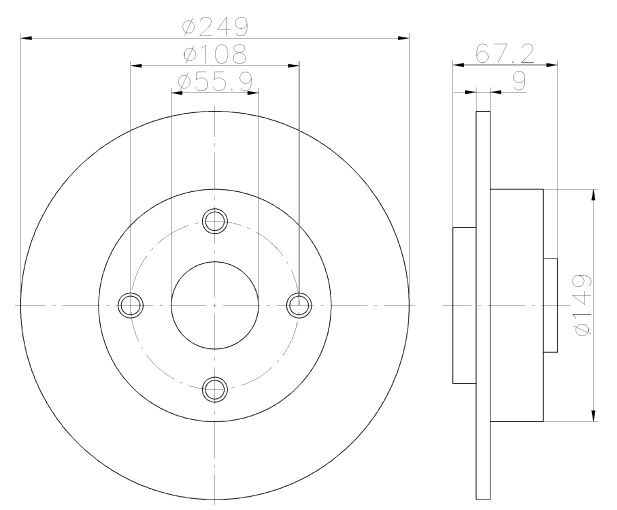

92133400

18

CHEVROLET, CHEVROLET (SGM), DAEWOO, HOLDEN

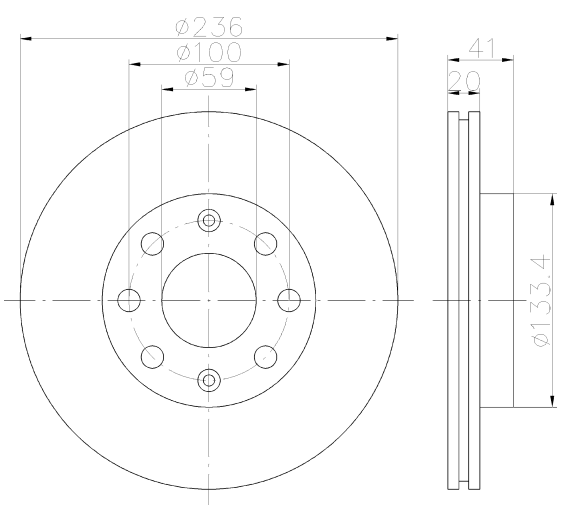

92133500

22

CHEVROLET, DAEWOO, HOLDEN

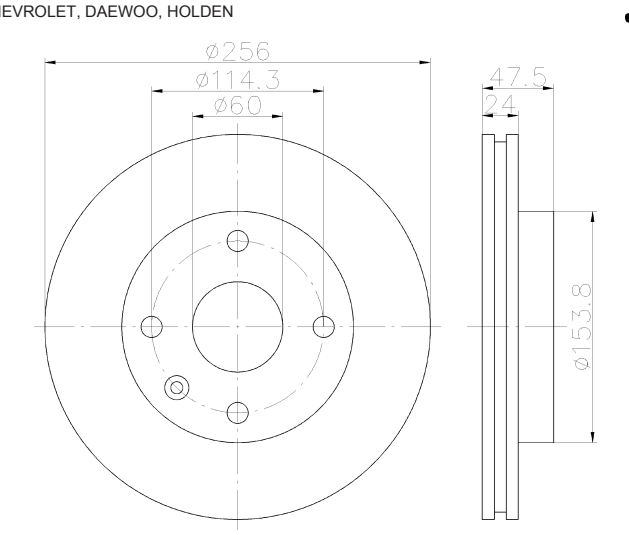

92133600

22

BUICK, CHEVROLET, DAEWOO, HOLDEN

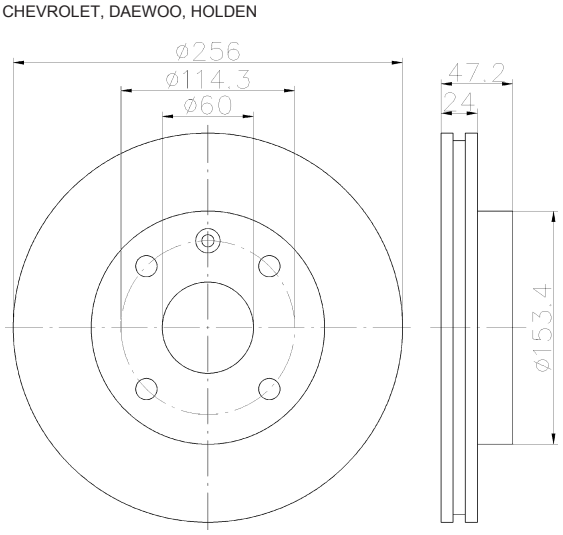

92133703

9 PRO

FORD, FORD (CHANGAN), MAZDA (CHANGAN), PEUGEOT (DF-PSA), ROEWE (SAIC), SHUGUANG

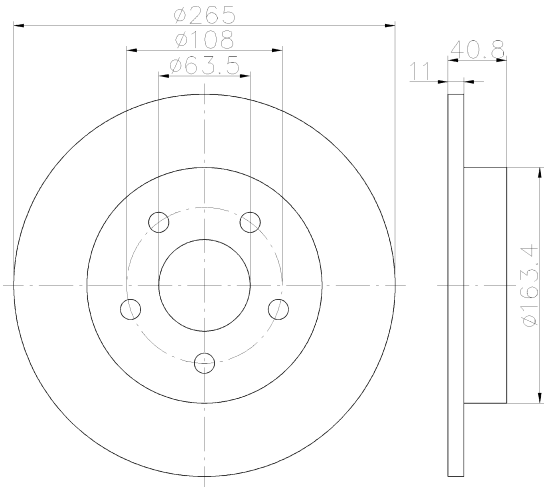

92133803

9 PRO

FORD, FORD AUSTRALIA, VOLVO, VOLVO (CHANGAN)

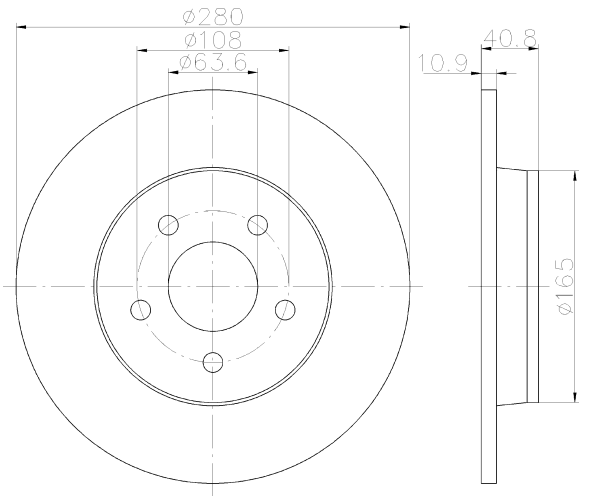

92133903

24.4 PRO

HYUNDAI, KIA

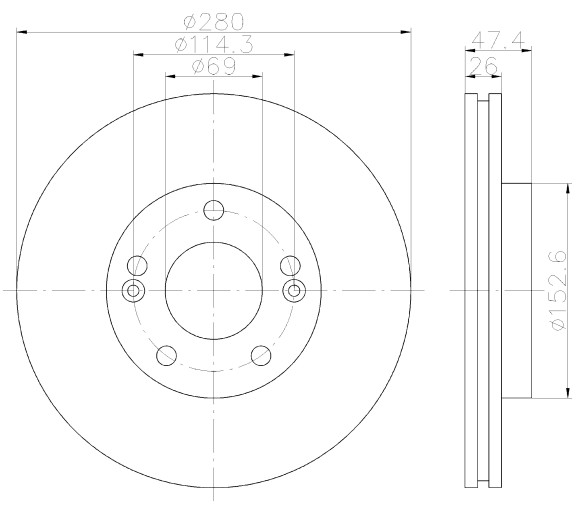

92134000

8.4

HYUNDAI, HYUNDAI (BEIJING), KIA

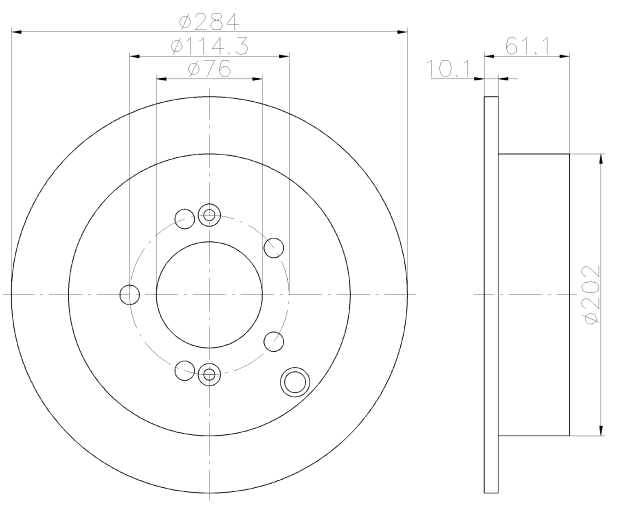

92134100

17

HYUNDAI, INOKOM

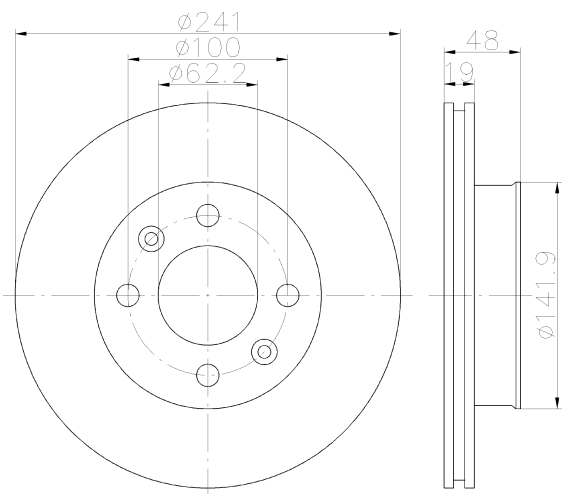

92134200

20

KIA

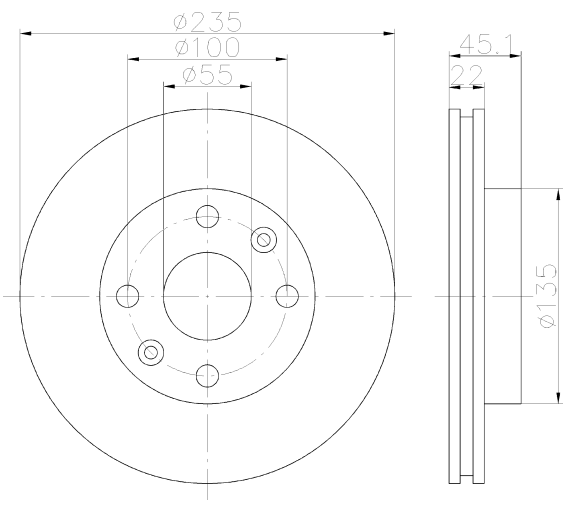

92134300

8

KIA

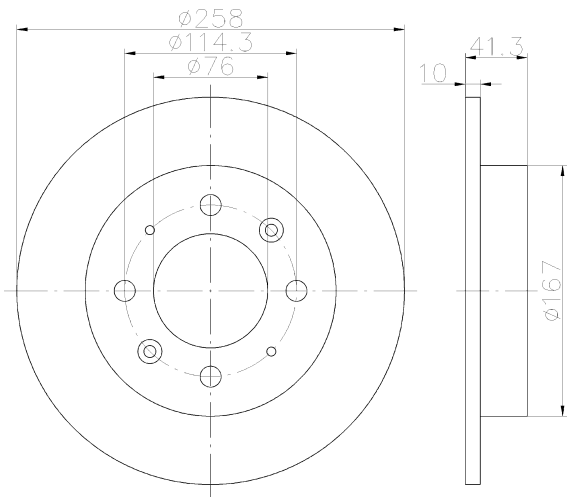

92134400

28.4

LAND ROVER

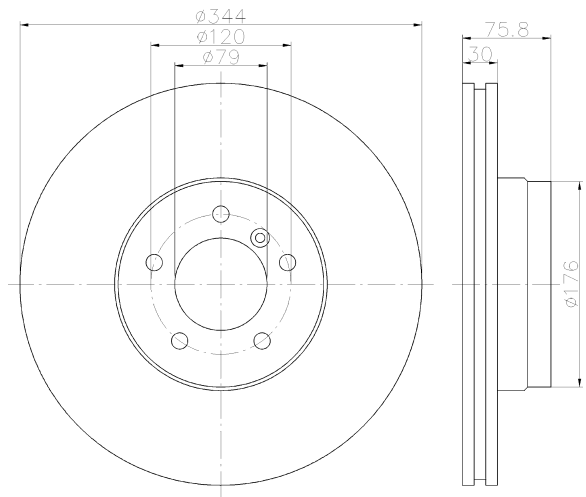

92134500

27

LAND ROVER

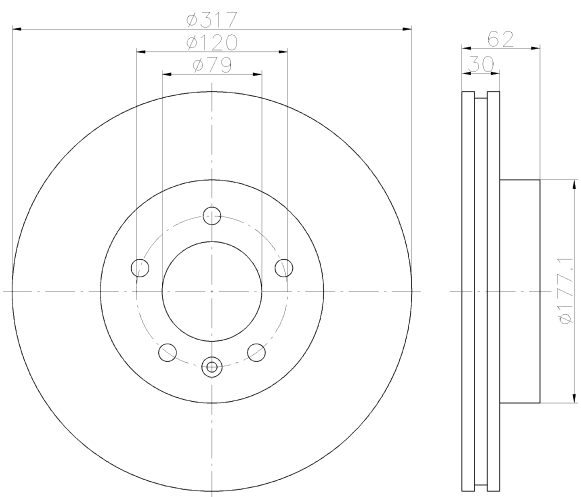

92134503

27 PRO

LAND ROVER

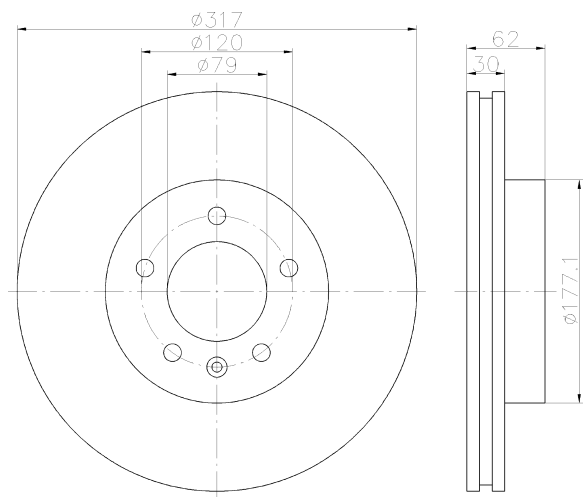

92134600

27

LAND ROVER

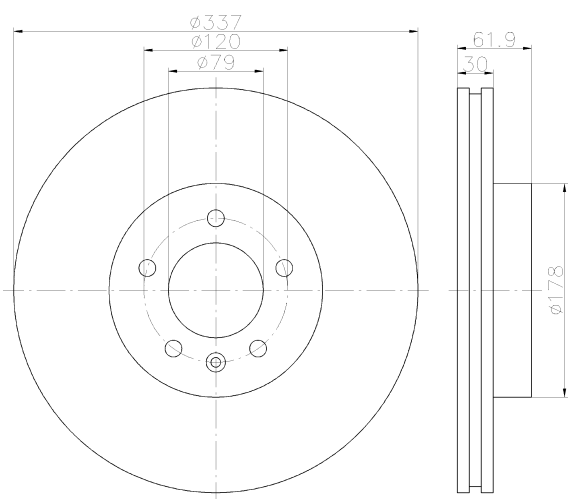

92134603

27 PRO

LAND ROVER

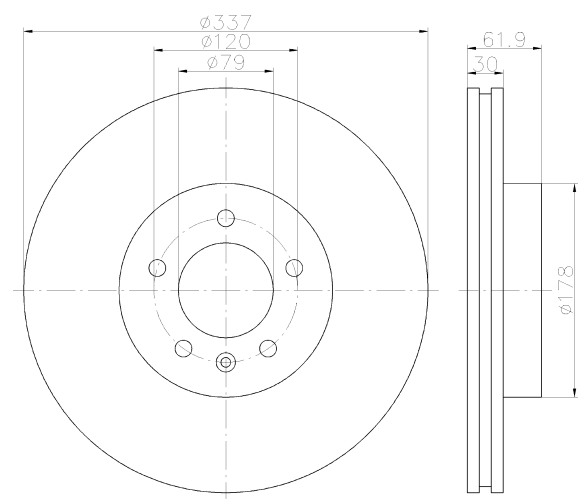

92134700

18.4

MITSUBISHI

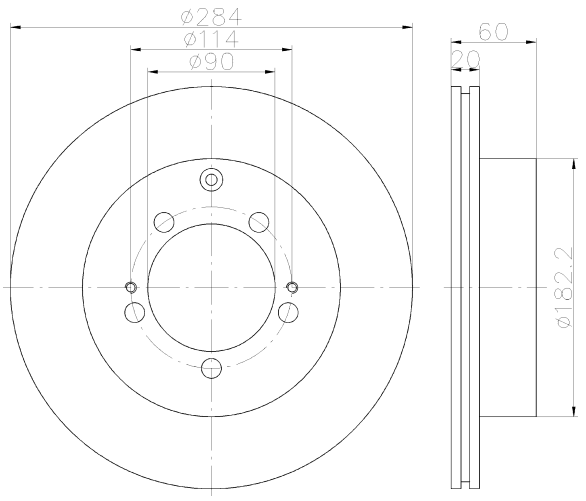

92134803

21.5 PRO

MITSUBISHI, SMART

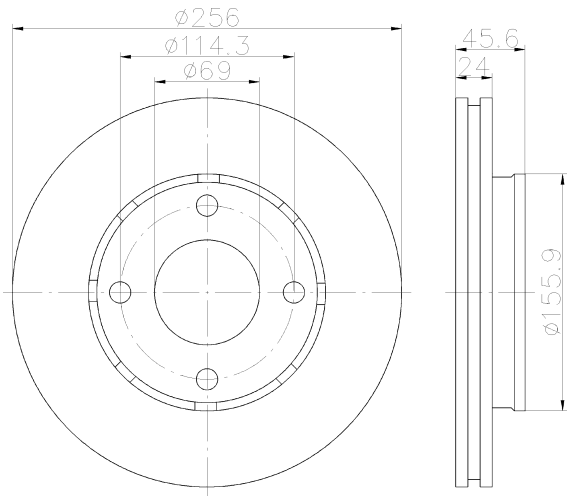

92134903

8 PRO

MITSUBISHI, SMART

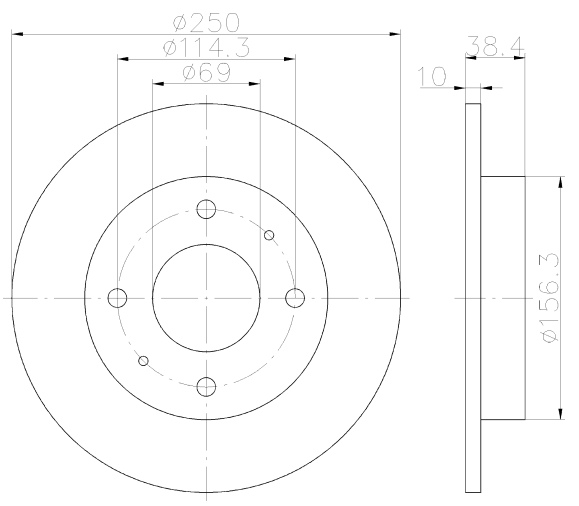

92135000

22.4

MITSUBISHI, PROTON

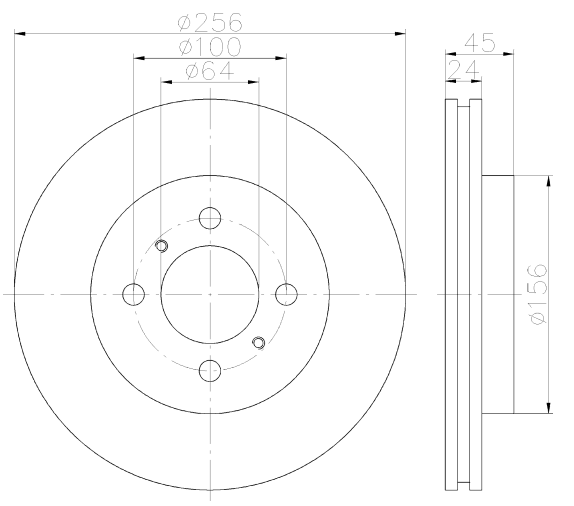

92135100

20.4

MITSUBISHI

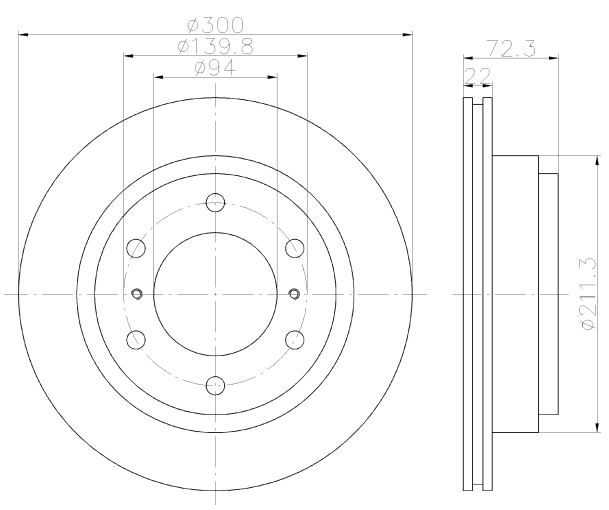

92135103

20.4 PRO

MITSUBISHI

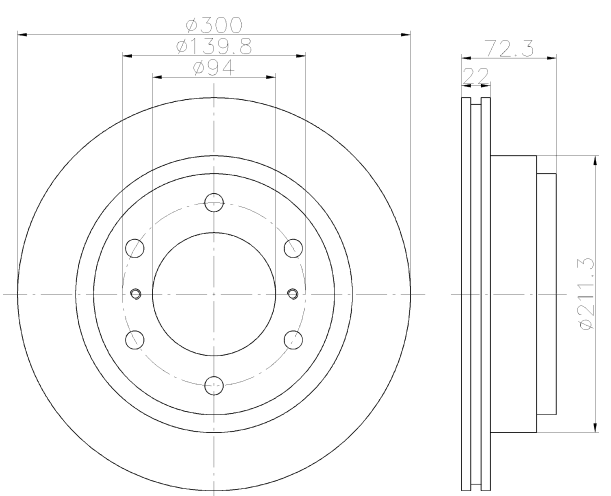

92135203

22.4 PRO

CITROËN, MITSUBISHI, MITSUBISHI (BJC), PEUGEOT

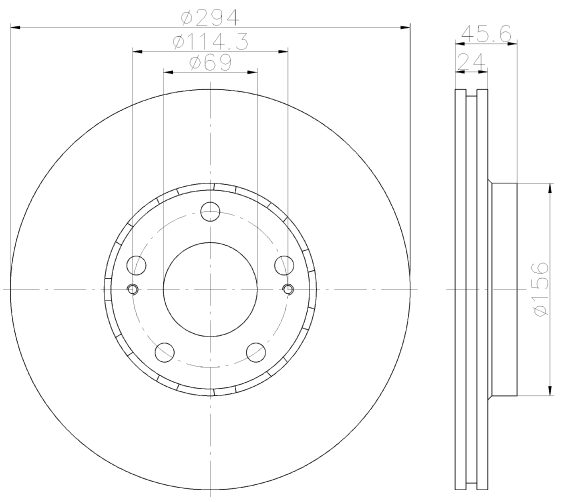

92135303

15 PRO

CHEVROLET, HOLDEN, OPEL, SUBARU, SUZUKI, VAUXHALL

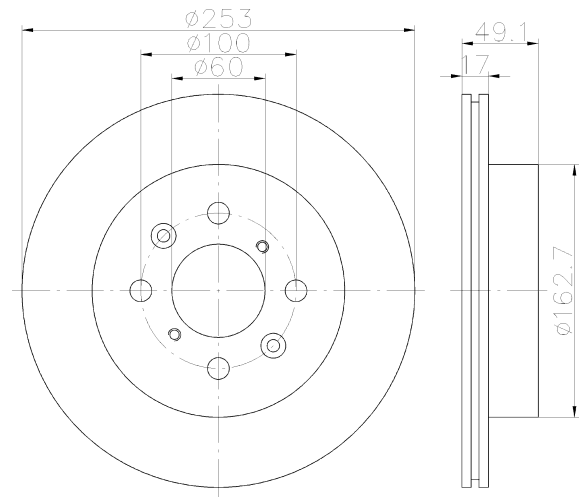

92135403

26 PRO

TOYOTA

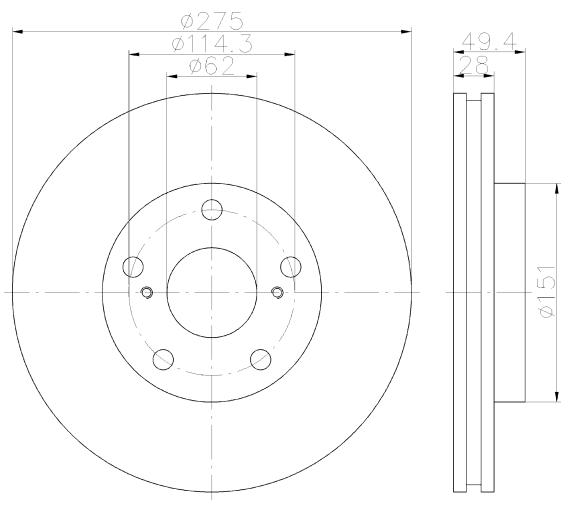

92135503

24 PRO

TOYOTA

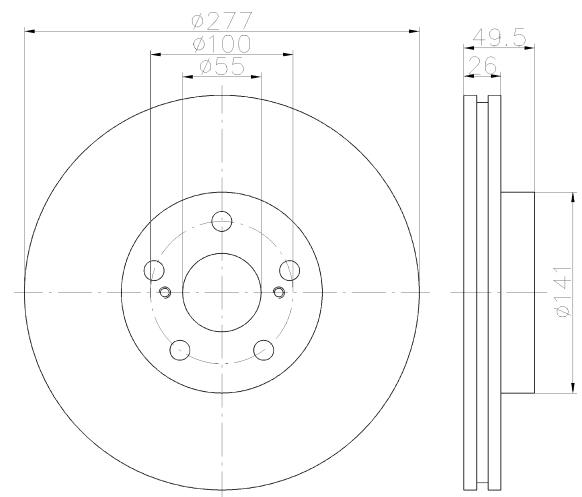

92135603

24 PRO

TOYOTA

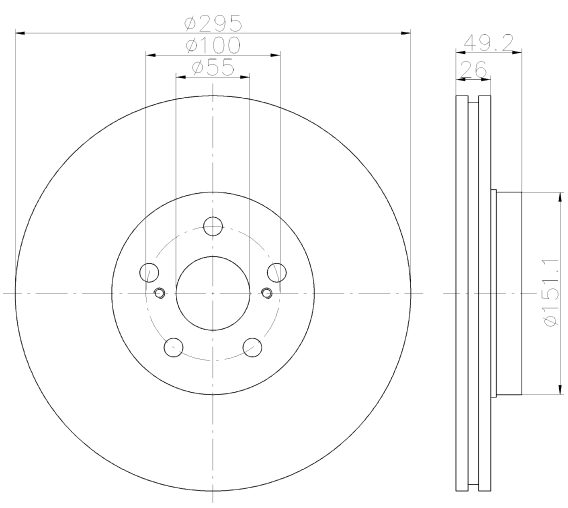

92135703

9 PRO

TOYOTA

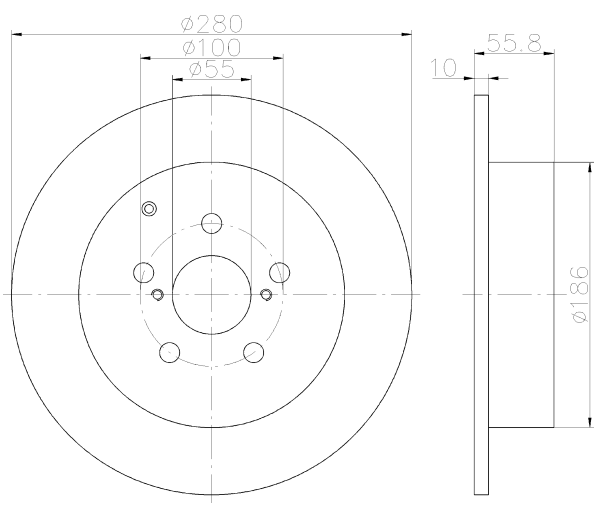

92135800

26

LEXUS, TOYOTA

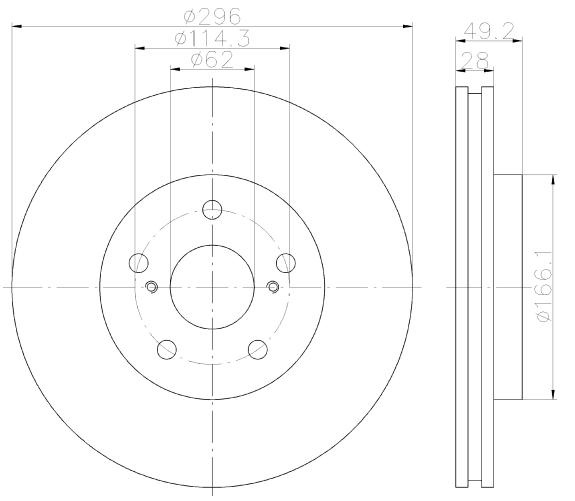

92135903

8.5 PRO

TOYOTA

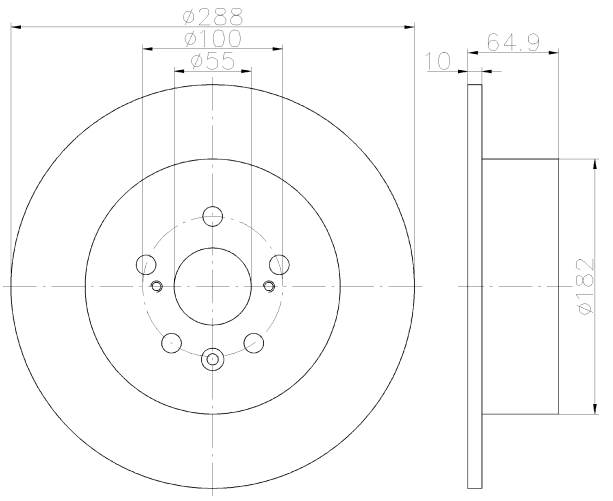

92136000

9

TOYOTA

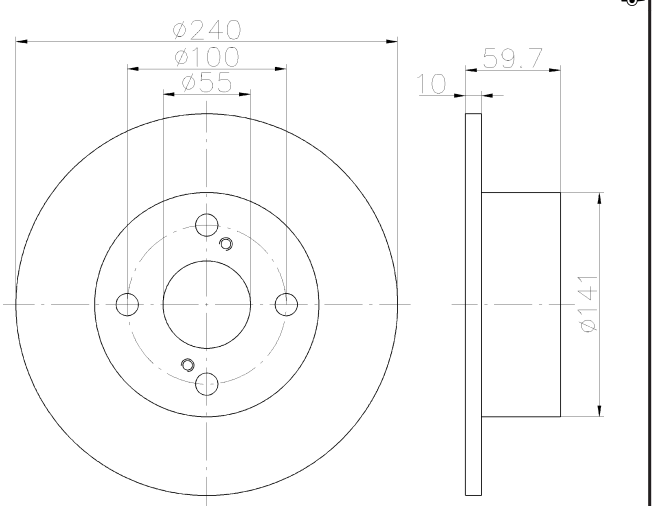

92136100

8.4

MITSUBISHI, MITSUBISHI (BJC)

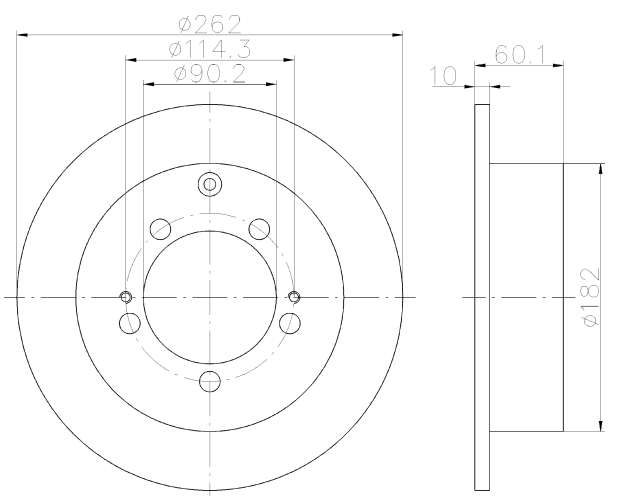

92136103

8.4 PRO

MITSUBISHI, MITSUBISHI (BJC)

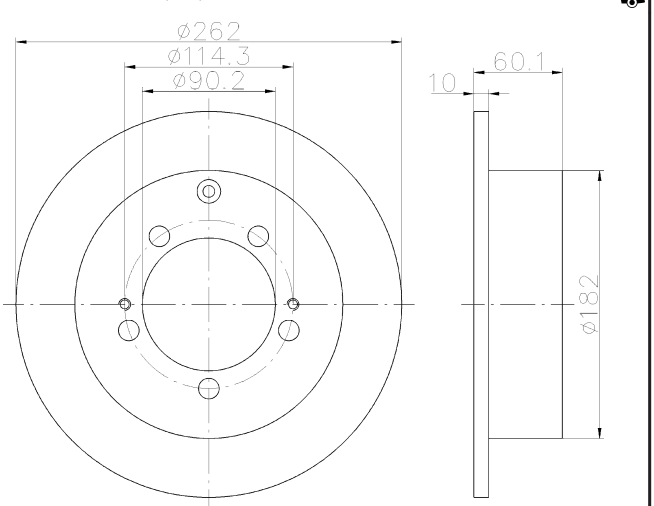

92136200

22

FORD, FORD ASIA / OZEANIA, FORD AUSTRALIA, MAZDA

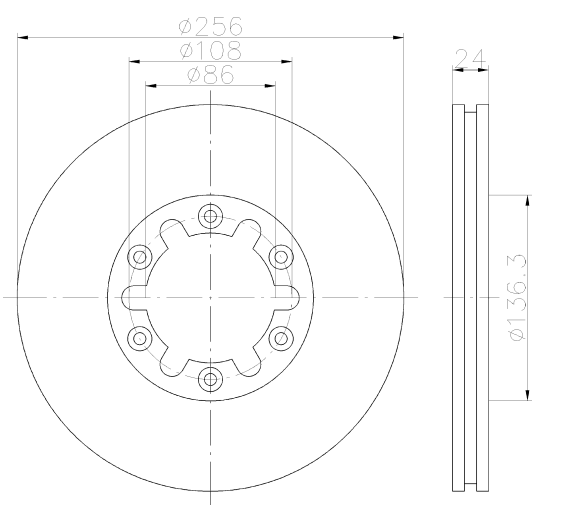

Illustrations

92136300

22

FORD, FORD ASIA / OZEANIA, FORD AUSTRALIA, MAZDA

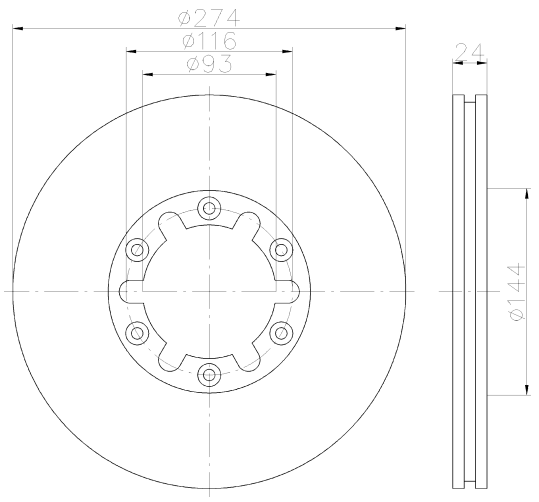

92136400

24.4

HYUNDAI

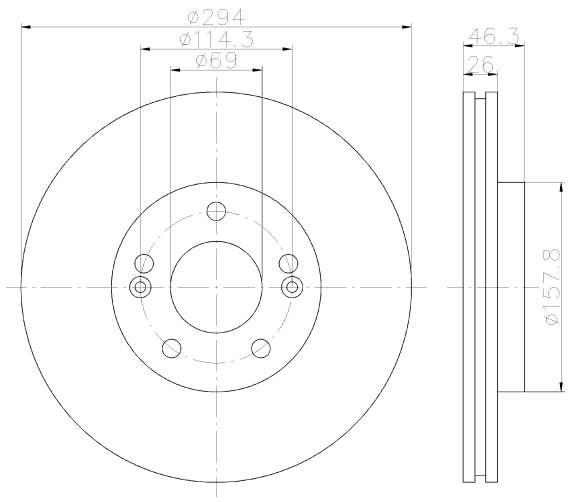

92136403

24.4 PRO

HYUNDAI

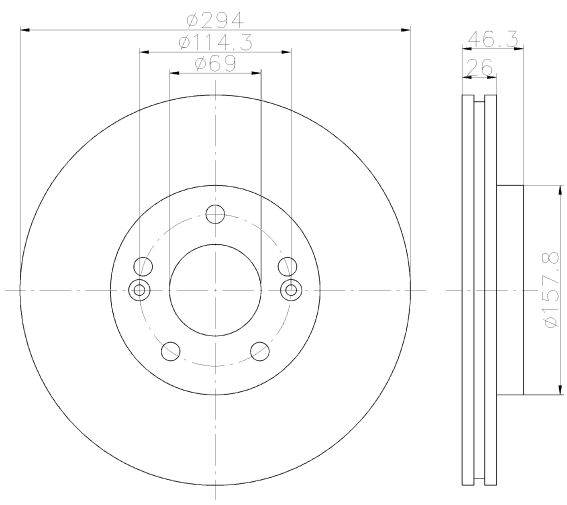

92136500

25.4

HYUNDAI

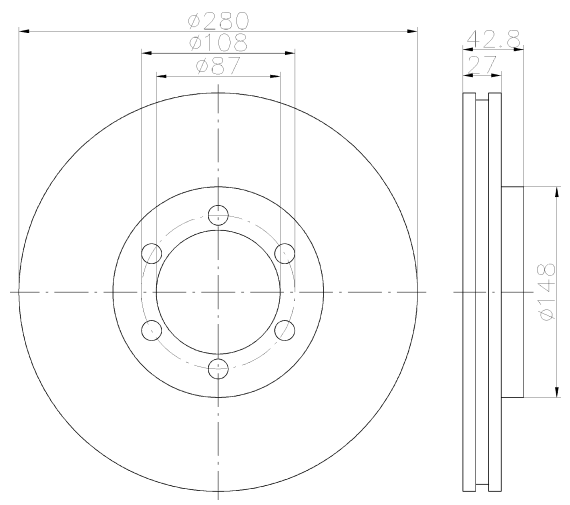

92136503

25.4 PRO

HYUNDAI

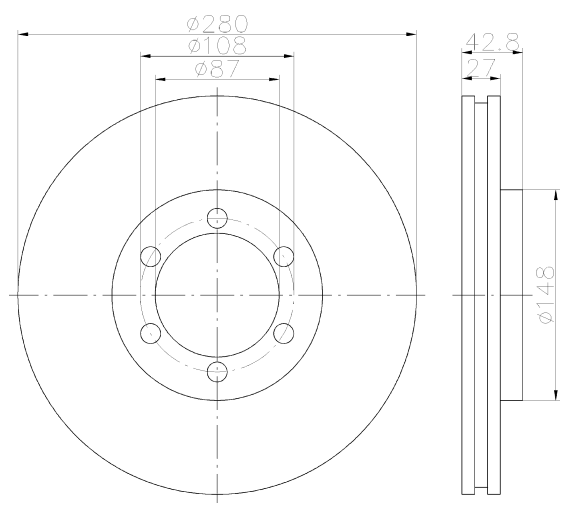

92136600

24.4

HYUNDAI, KIA

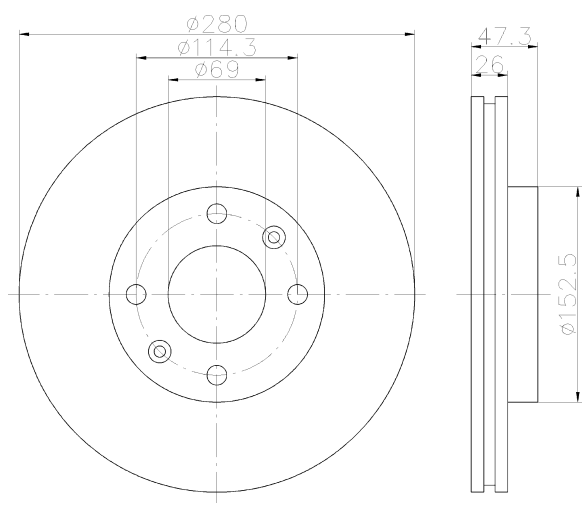

92136700

24

KIA

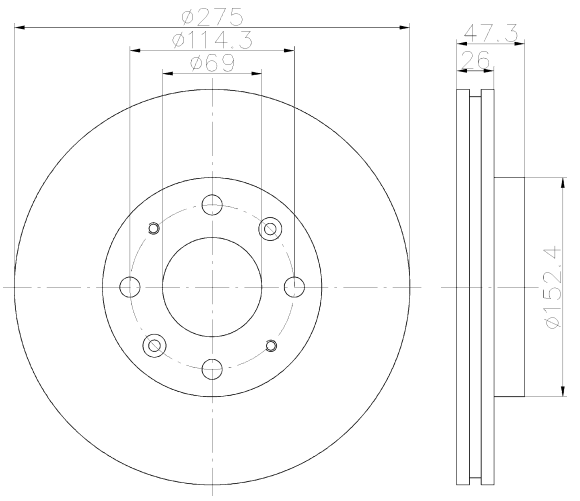

92136800

15

SUZUKI

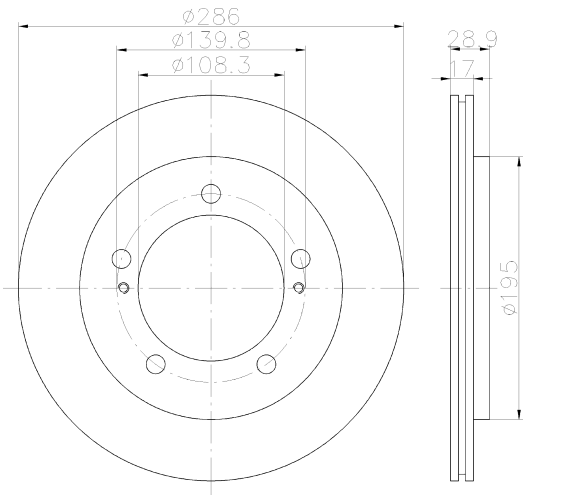

92137003

10 PRO

AUDI, AUDI (FAW), SEAT

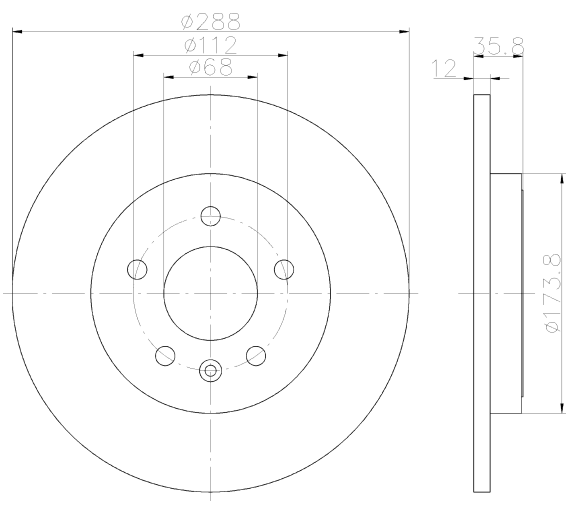

92137103

20 PRO

AUDI

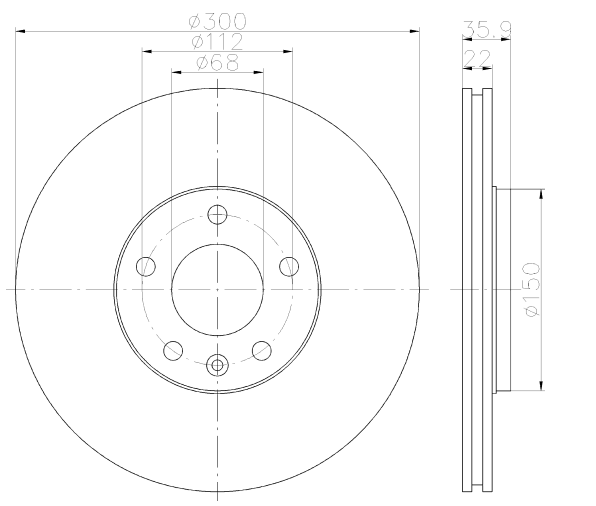

92137203

19.4 PRO

CHRYSLER, MERCEDES-BENZ

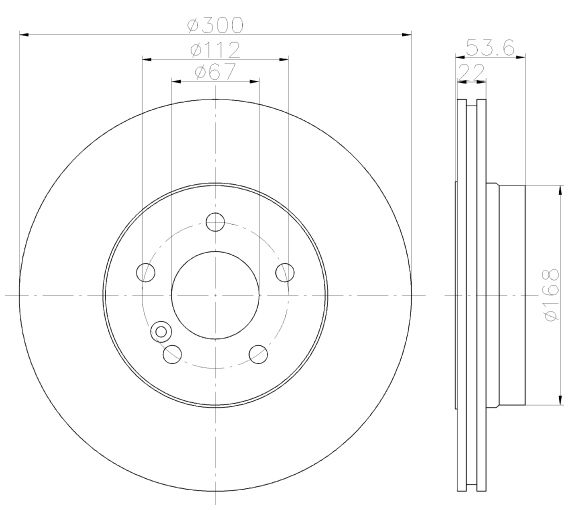

92137300

26

LEXUS, TOYOTA, TOYOTA (FAW)

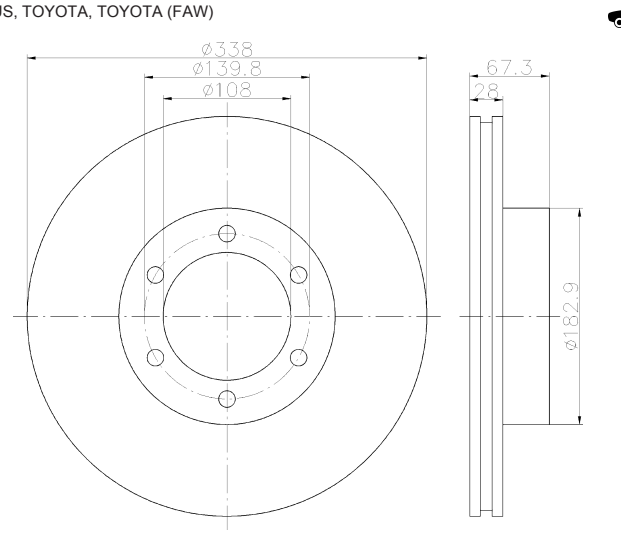

92137503

10 PRO

MERCEDES-BENZ, PUCH, VOLKSWAGEN

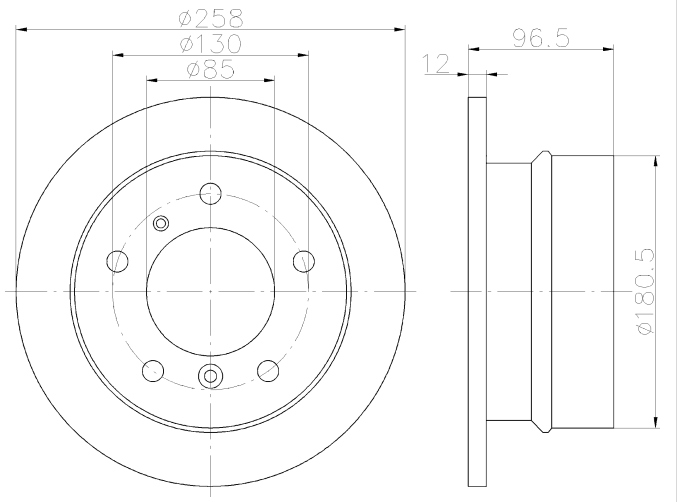

92137603

14 PRO

MERCEDES-BENZ, PUCH, VOLKSWAGEN

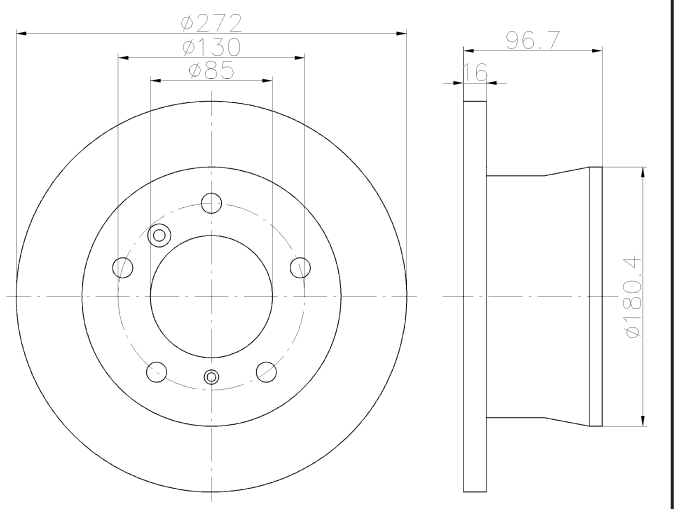

92137703

22.4 PRO

BMW, BMW (BRILLIANCE), CHANGFENG

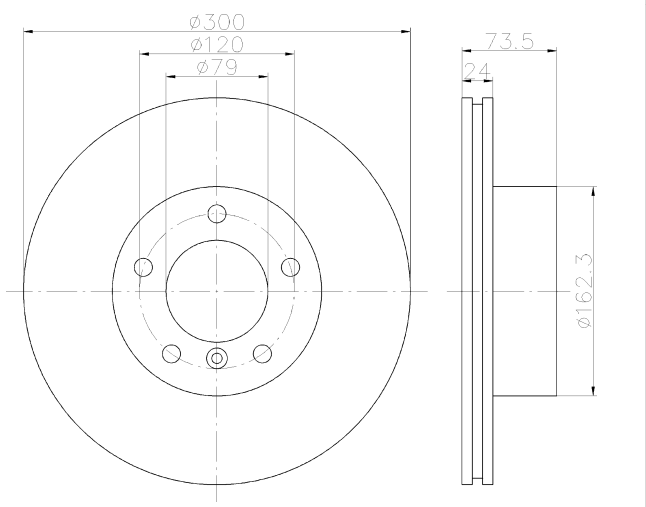

92137803

22.4 PRO

BMW, BMW (BRILLIANCE)

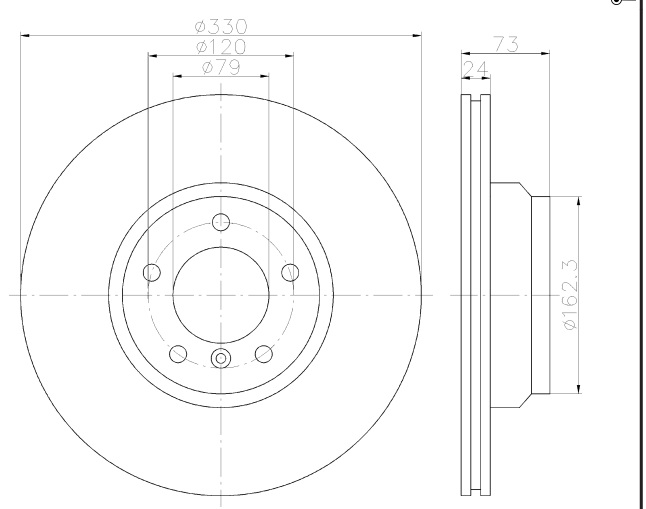

92137903

20.4 PRO

BMW, BMW (BRILLIANCE), CHEVROLET (SGM), CHEVROLET (SGMW)

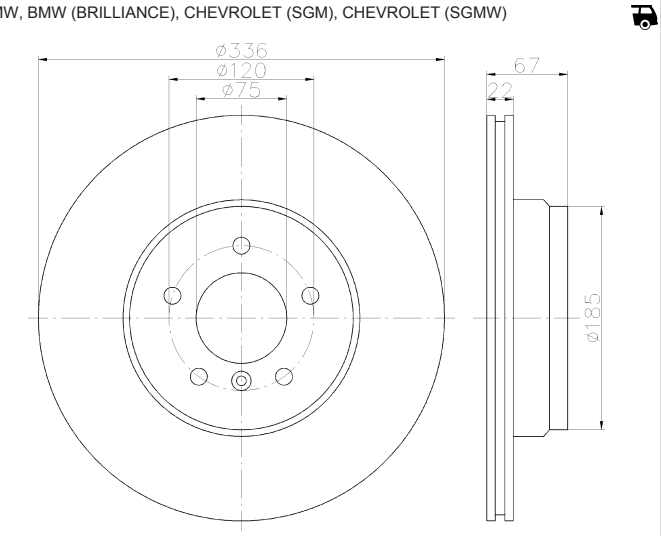

92138200

15

DAIHATSU, HUALI, PREMIER, TOYOTA, TOYOTA (FAW)

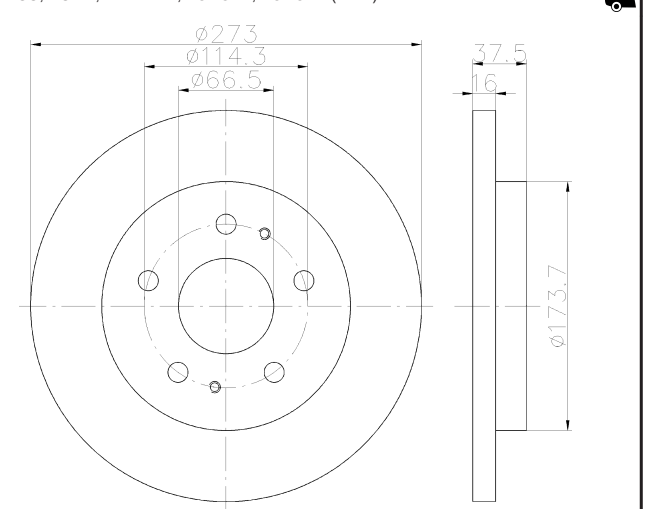

92138300

30

NISSAN

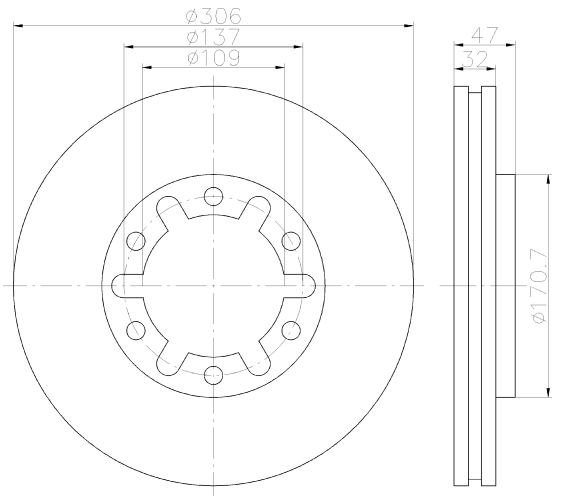

92138400

22.5

DAEWOO, SSANGYONG

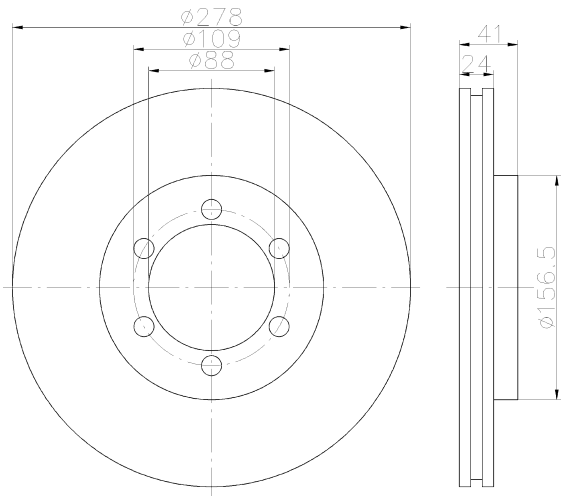

92138500

8.5

DAEWOO, SSANGYONG

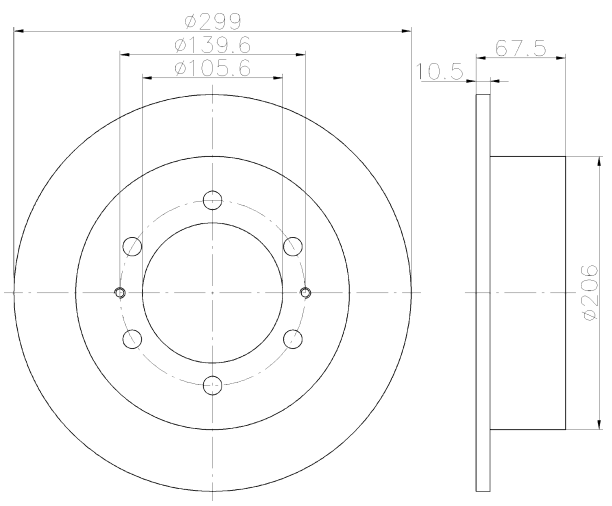

92138600

8

HONDA

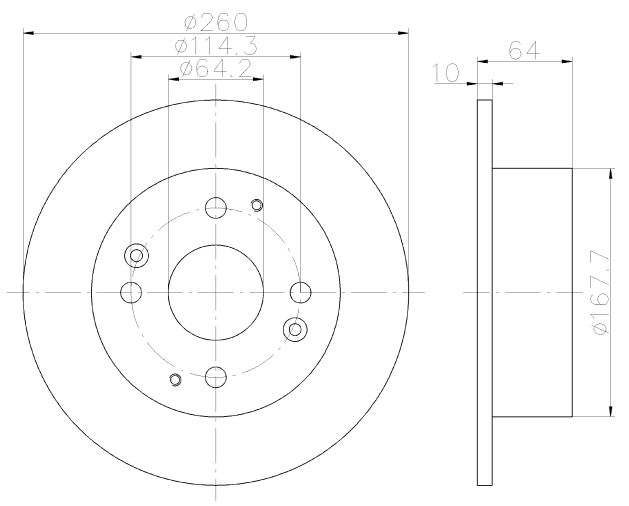

92138700

26

HONDA

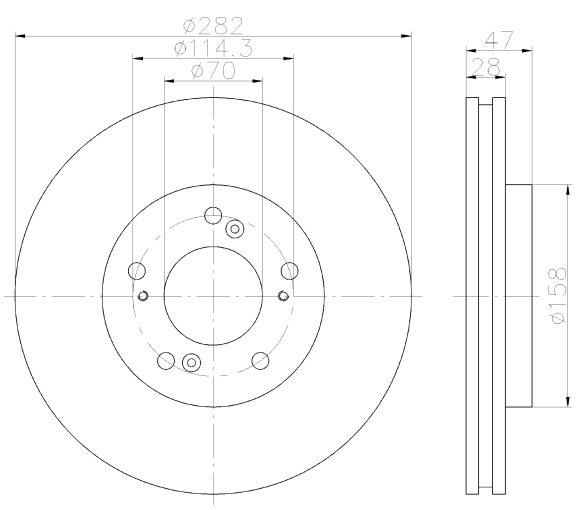

92138900

23

TOYOTA

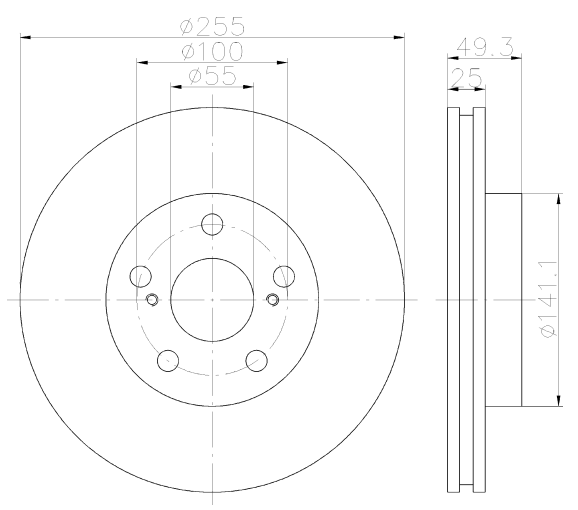

92139300

18.5

DAIMLER, JAGUAR

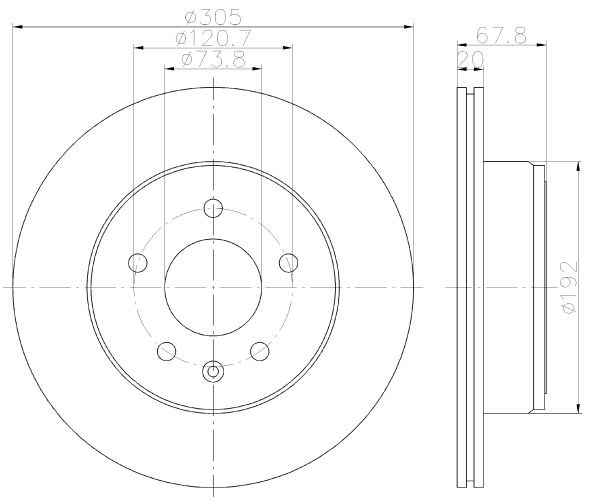

92139500

22

SAAB, SUBARU, TOYOTA

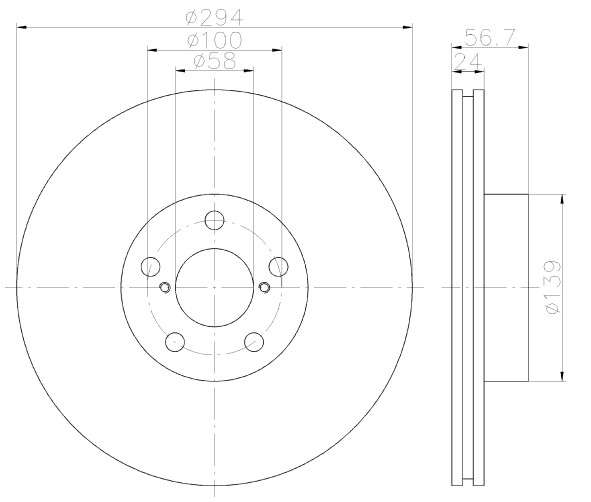

92139700

23

TOYOTA

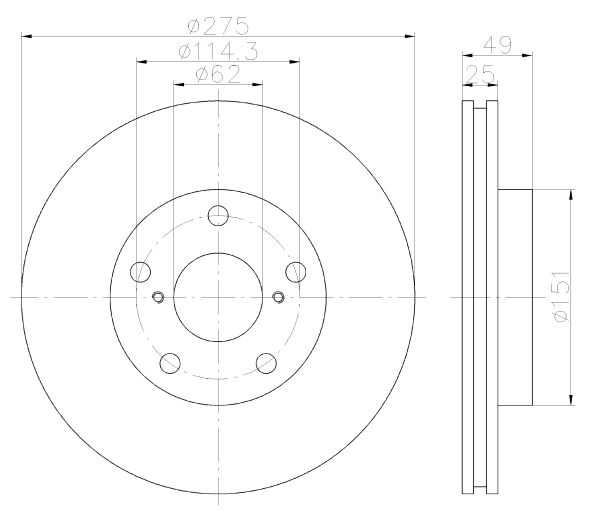

92139703

PRO

23

TOYOTA

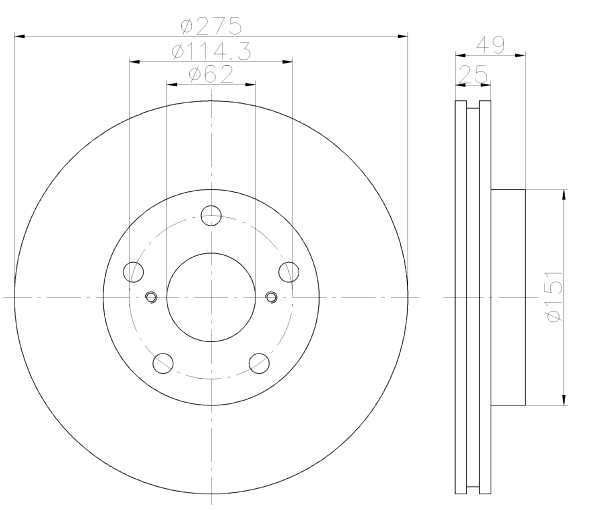

92139800

10.5

LEXUS, TOYOTA

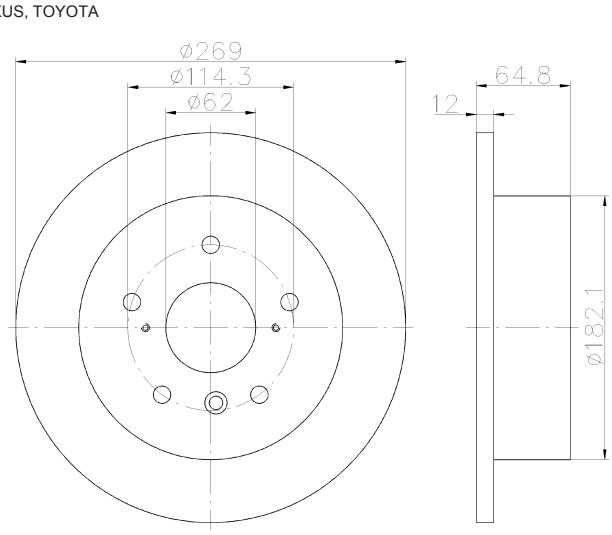

92139903

PRO

22.2

FORD, FORD AUSTRALIA

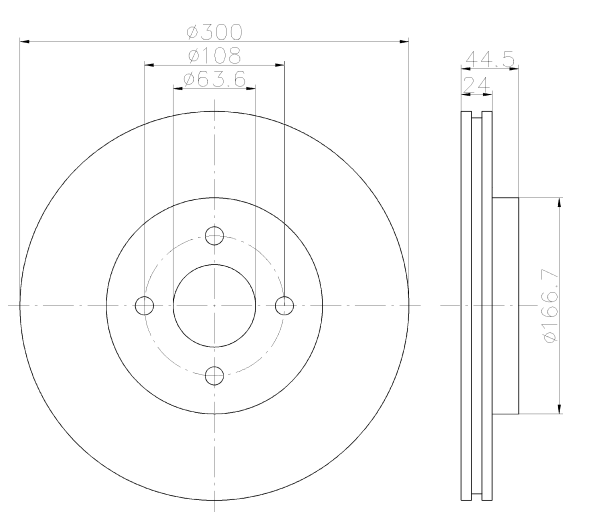

92140200

26

DAIMLER

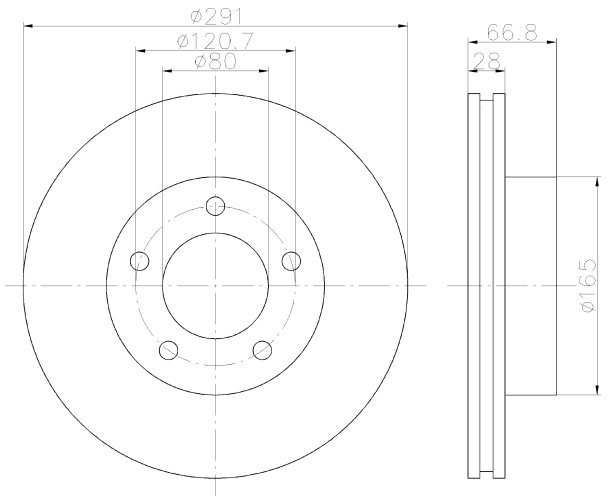

92140703

20 PRO

AUDI, SEAT, SKODA, VOLKSWAGEN, VOLKSWAGEN (FAW)

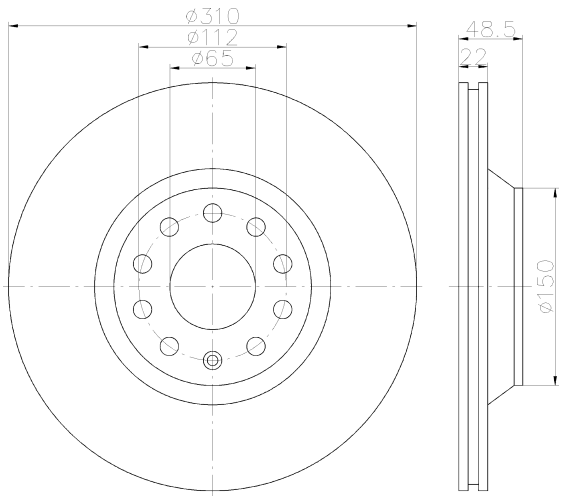

92140803

10.5 PRO

AUDI, AUDI (FAW), SEAT, SKODA, VOLKSWAGEN, VOLKSWAGEN (FAW), VOLKSWAGEN (SVW)

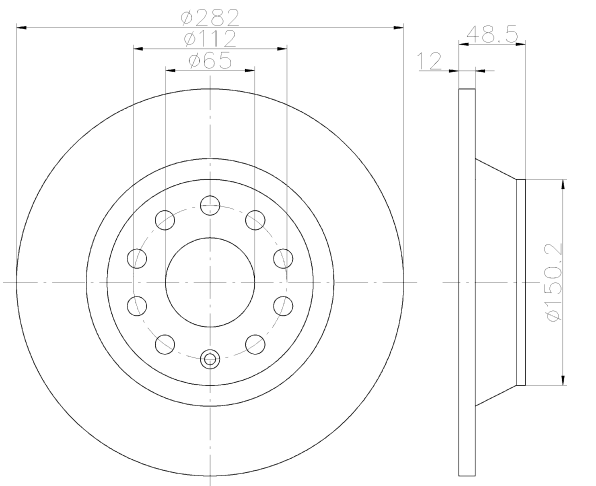

92140900

23

HONDA

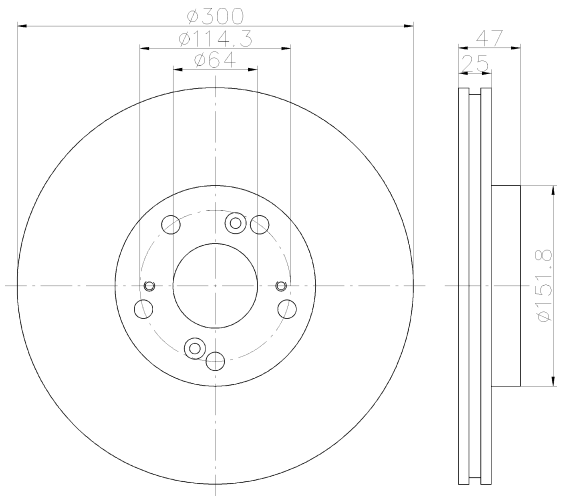

92140903

23 PRO

HONDA

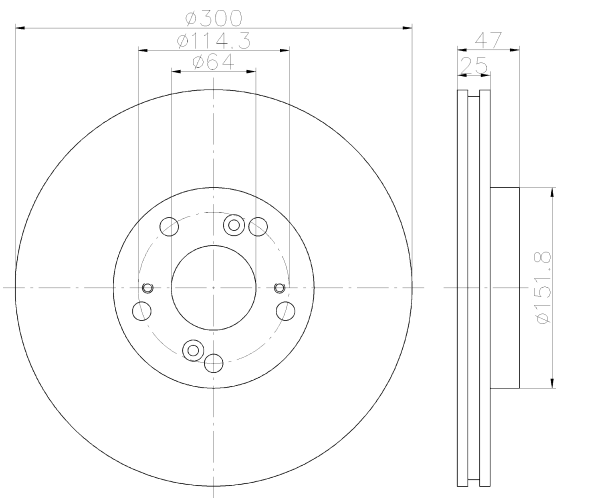

92141203

23 PRO

FORD, FORD (CHANGAN), MAZDA (CHANGAN), ROEWE (SAIC), VOLVO, VOLVO (CHANGAN)

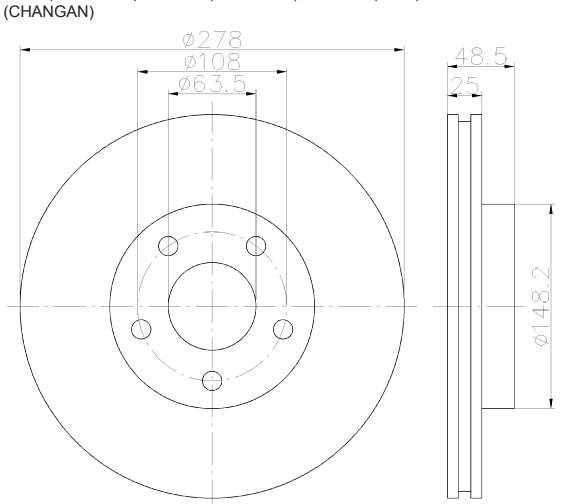

92141303

23 PRO

FORD, FORD AUSTRALIA, VOLVO, VOLVO (CHANGAN)

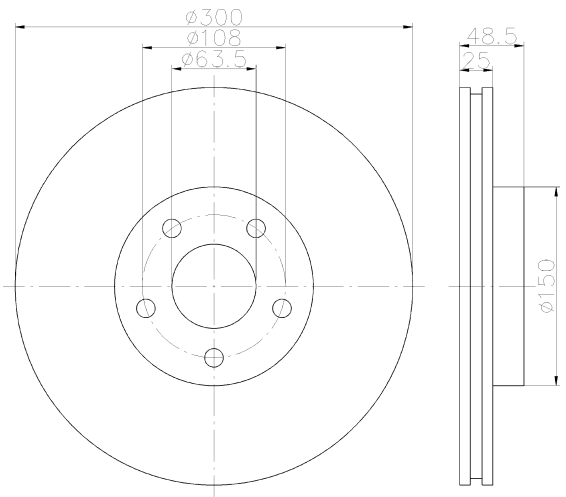

92141403

9.5 PRO

RENAULT

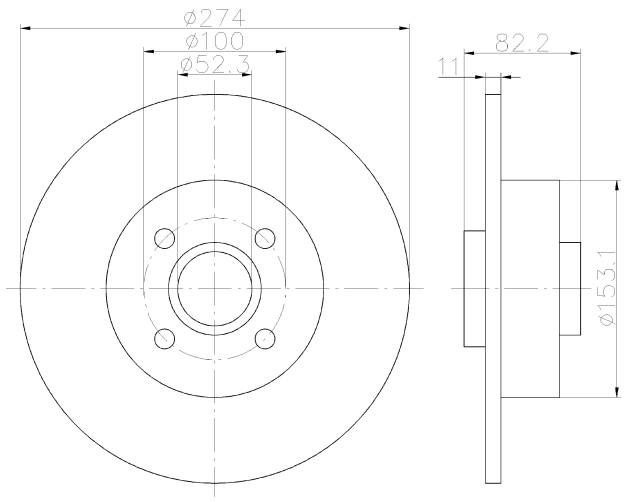

92141503

23.4 PRO

BMW

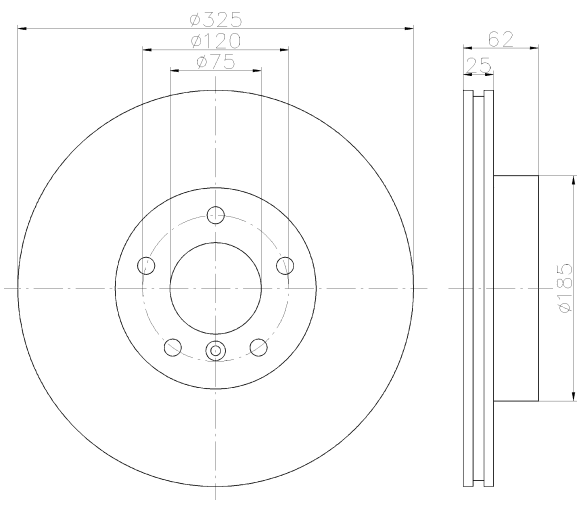

92141603

20.4 PRO

BMW

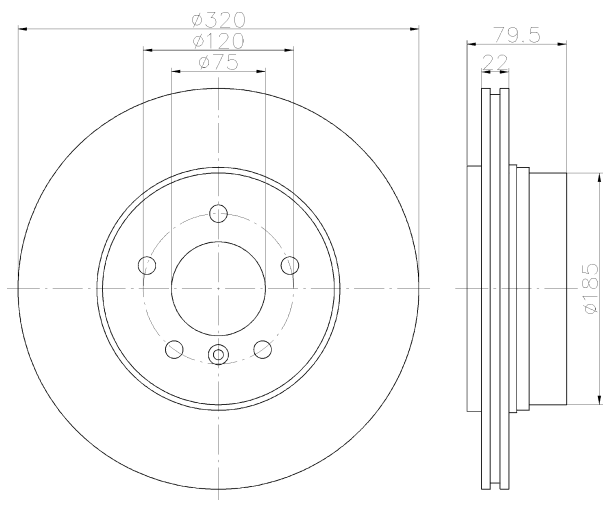

92141703

17.4 PRO

BMW

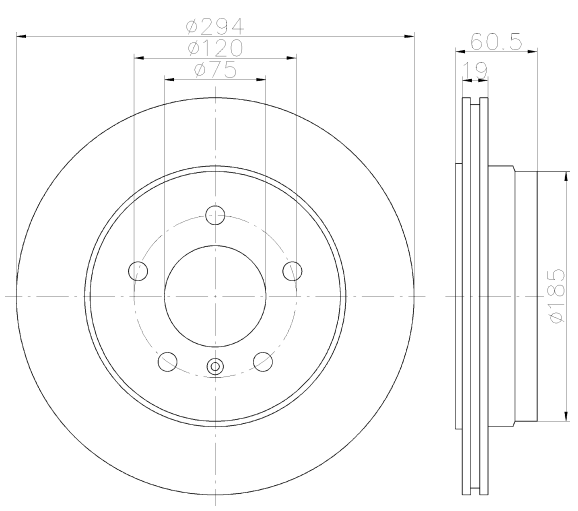

92141903

18 PRO

CITROËN, PEUGEOT, TOYOTA

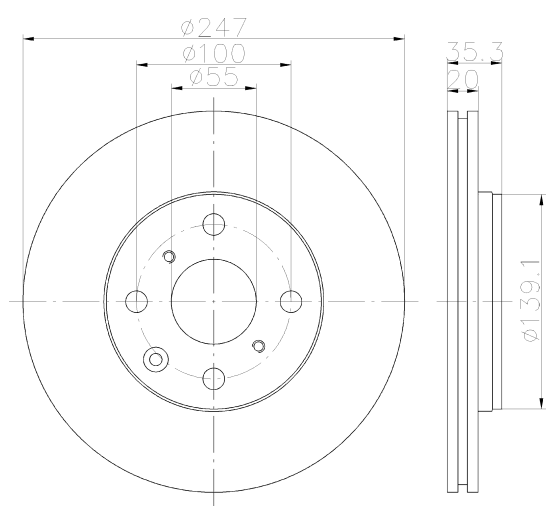

92142003

26 PRO

TOYOTA

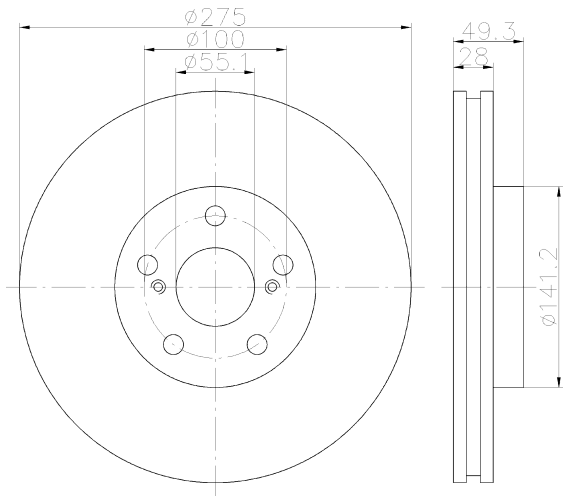

92142100

16

SUBARU

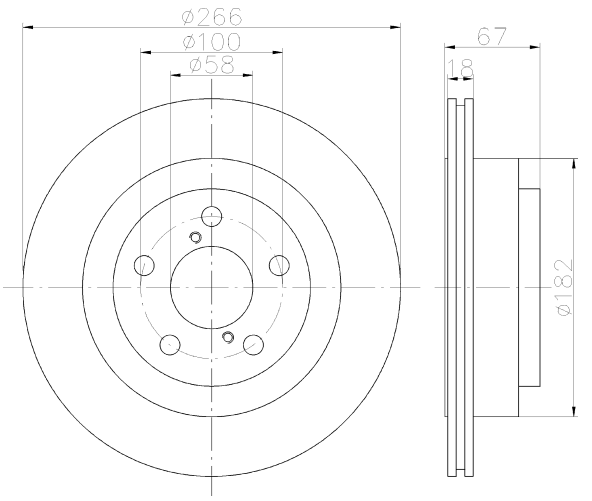

92142203

9.5 PRO

RENAULT

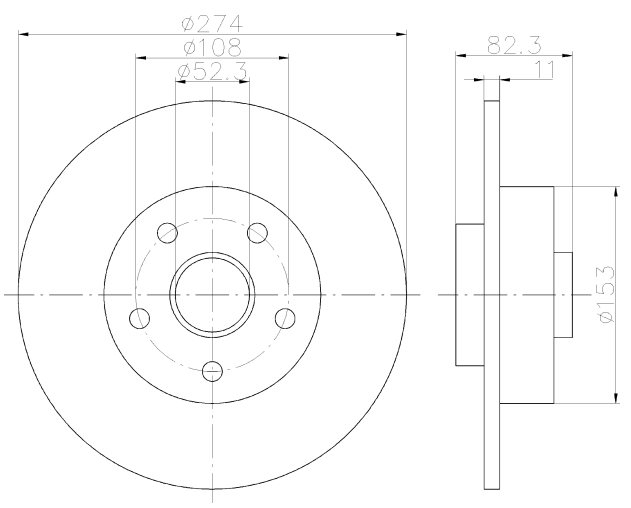

92143500

22

LDV

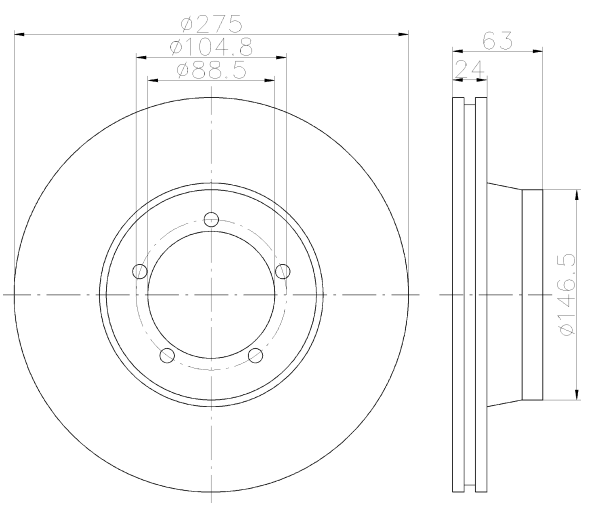

92143900

28

AUDI

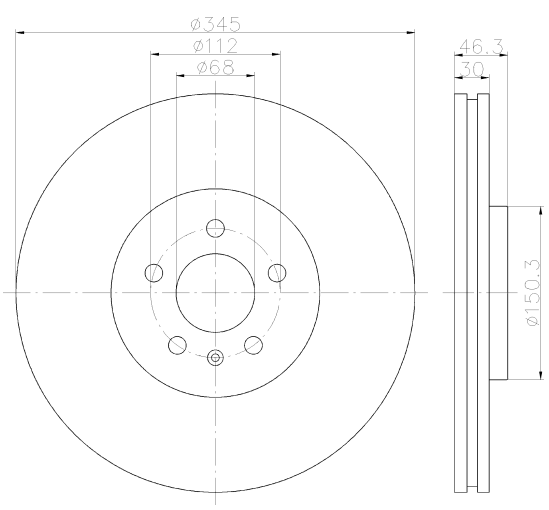

92143903

28 PRO

AUDI

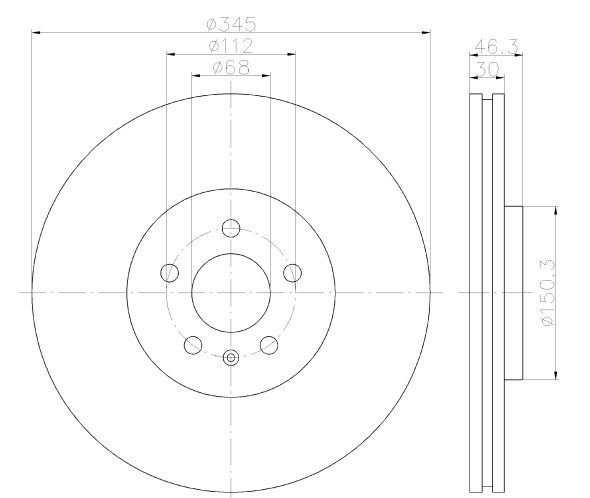

92144000

14

NISSAN, NISSAN (DONGFENG), RENAULT, RENAULT SAMSUNG

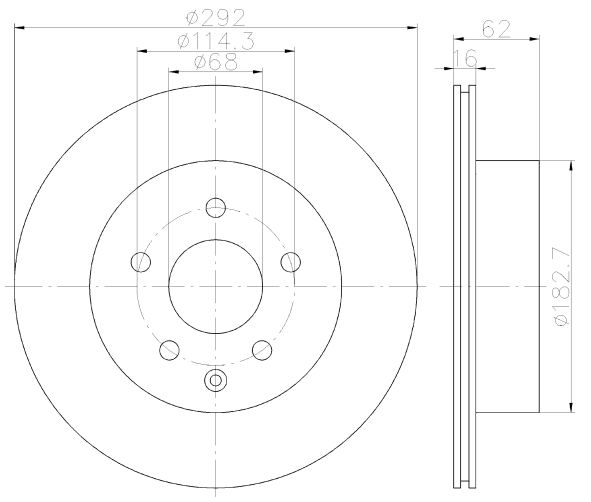

92144003

PRO

14

NISSAN, NISSAN (DONGFENG), RENAULT, RENAULT SAMSUNG

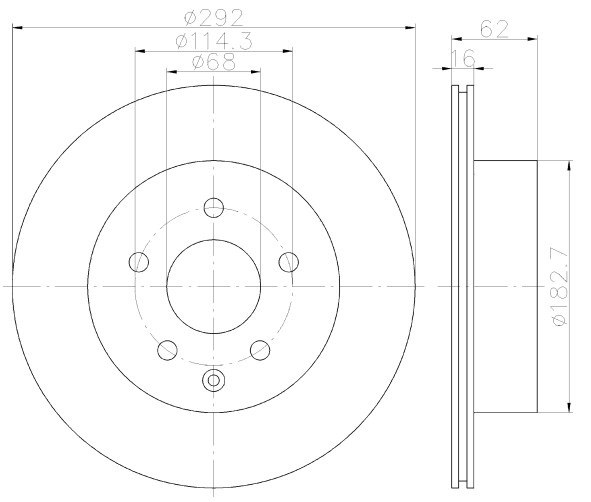

92144100

8

DR, TOYOTA

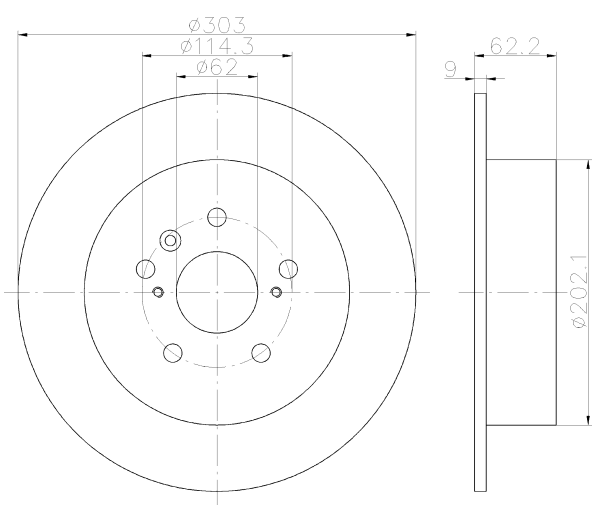

92144103

PRO

8

DR, TOYOTA

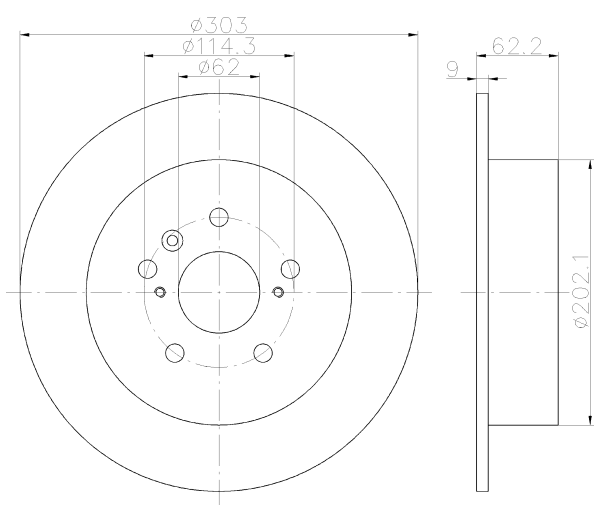

92144203

PRO

10.5

TOYOTA

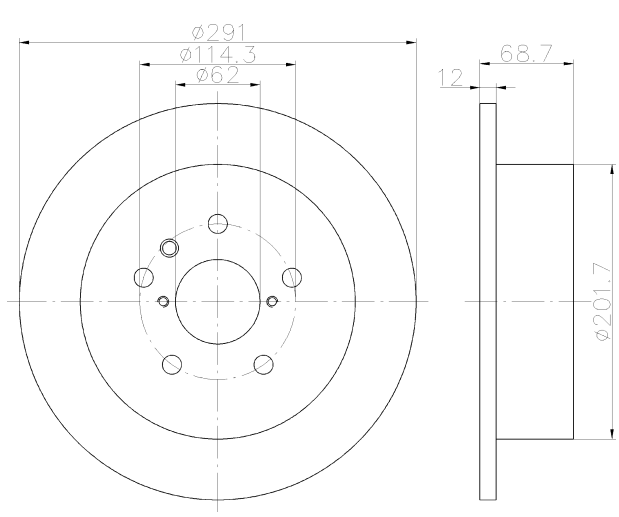

92144300

16

NISSAN

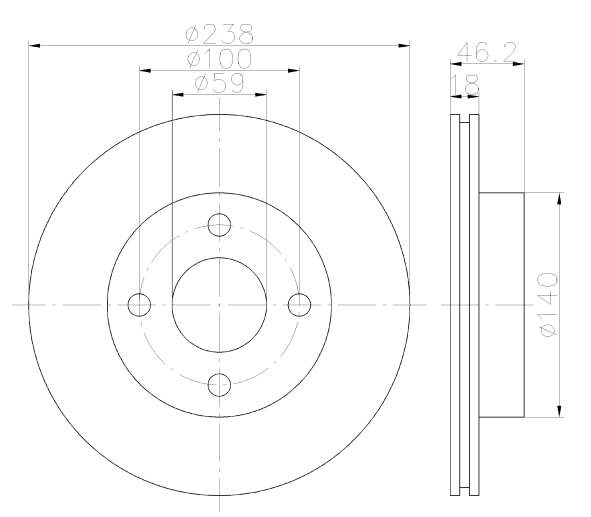

92144403

21 PRO

BYD, HONDA, HONDA (DONGFENG)

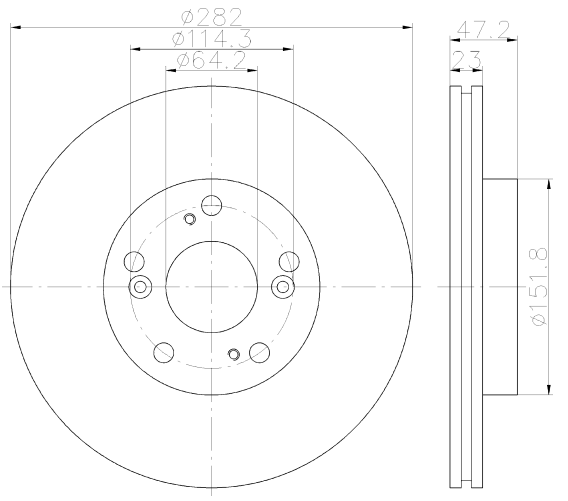

92144500

10

HONDA

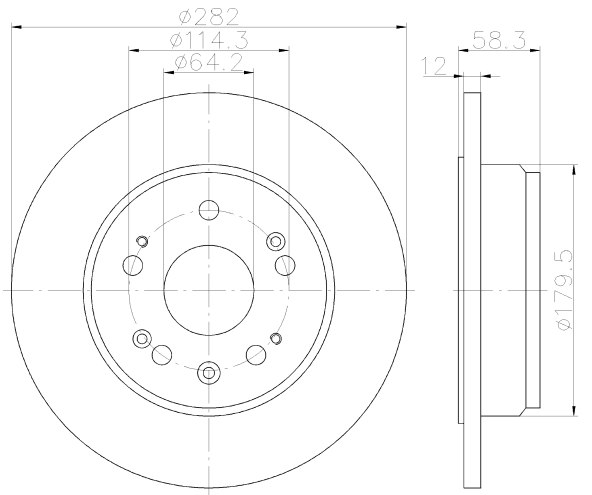

92144600

8

HONDA

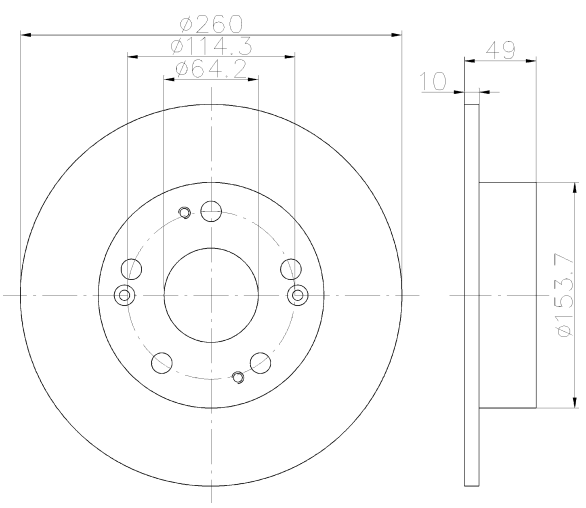

92144603

8 PRO

HONDA

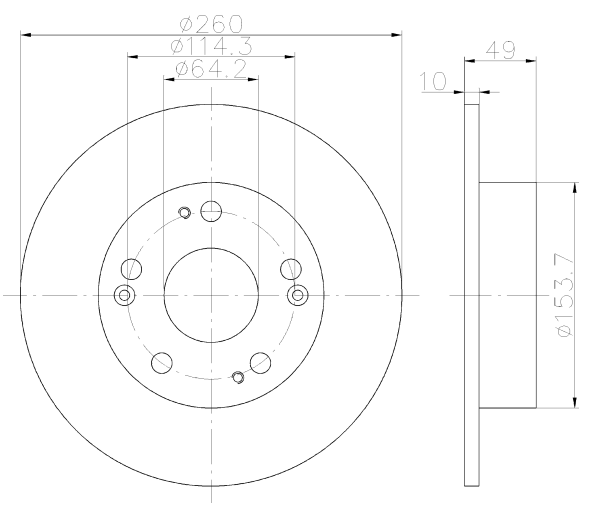

92144700

17

HYUNDAI, INOKOM

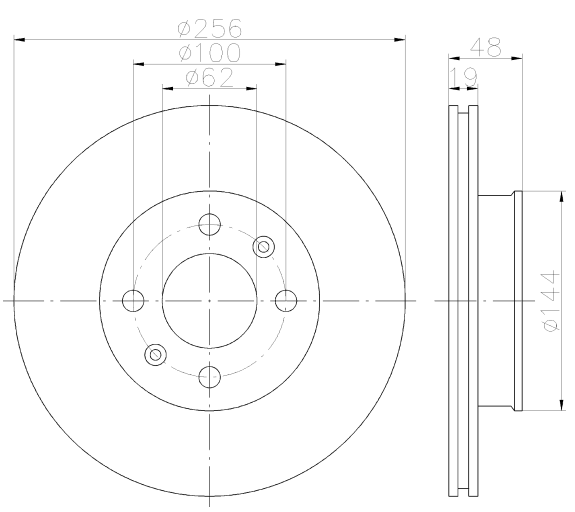

92144800

22.4

MITSUBISHI, PEUGEOT

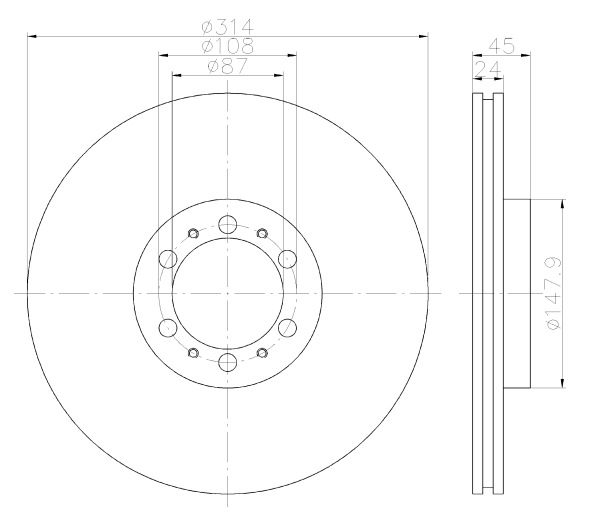

92144803

22.4 PRO

MITSUBISHI, MITSUBISHI (BJC)

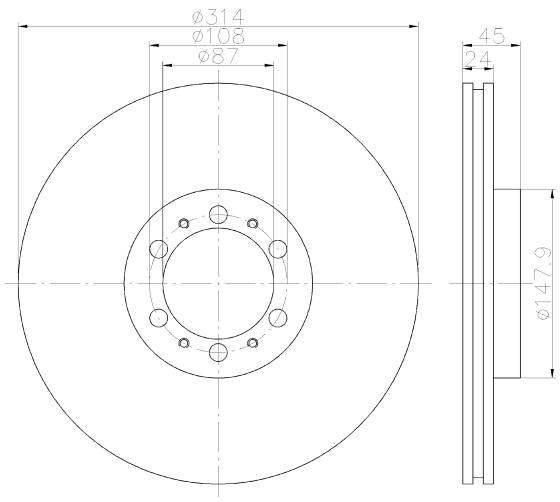

92144900

18

OPEL, VAUXHALL

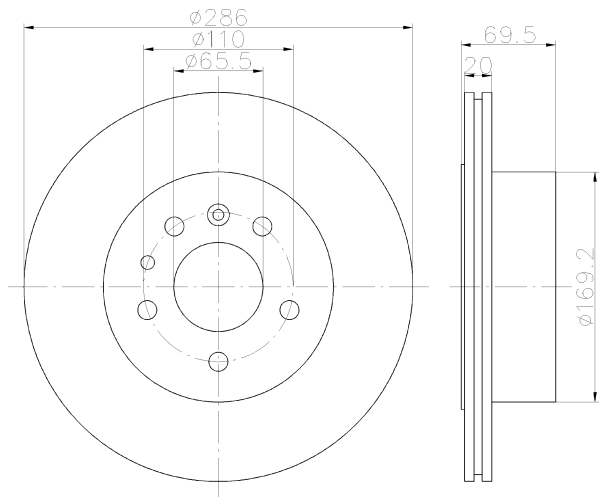

92145003

26 PRO

ALFA ROMEO

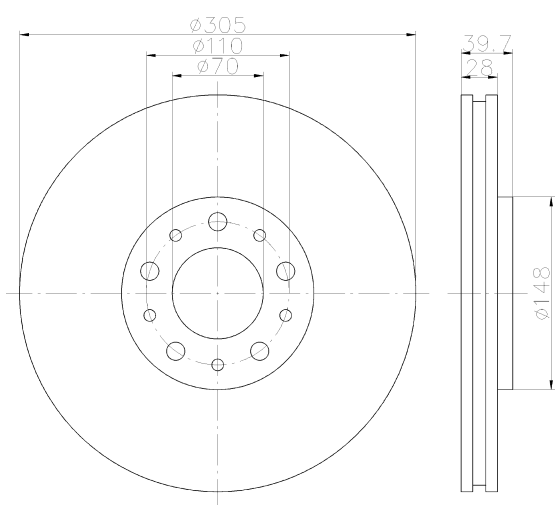

92145100

26

ALFA ROMEO

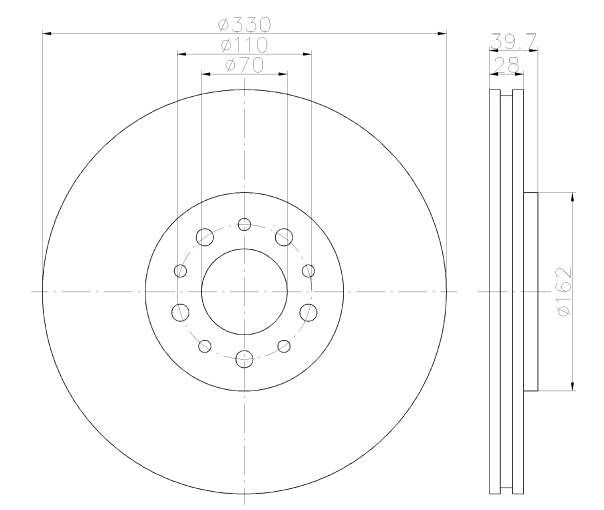

92145103

26 PRO

ALFA ROMEO

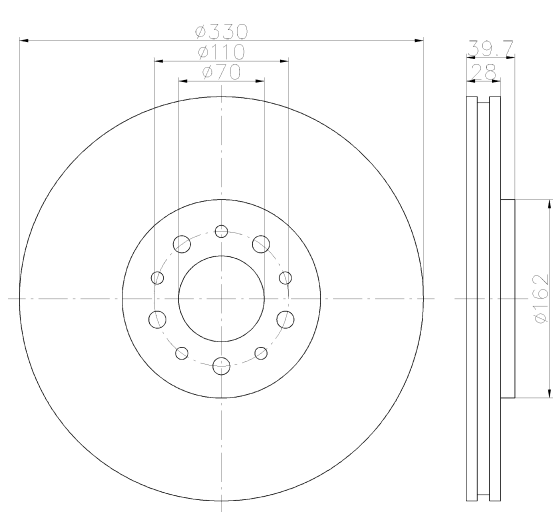

92145203

10 PRO

ALFA ROMEO

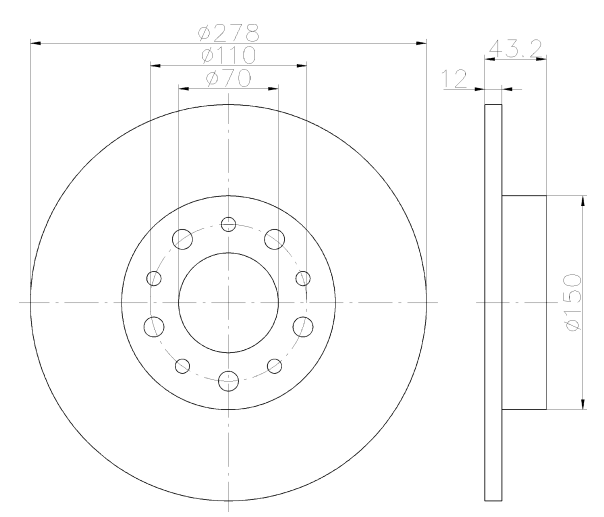

92145303

20 PRO

ALFA ROMEO

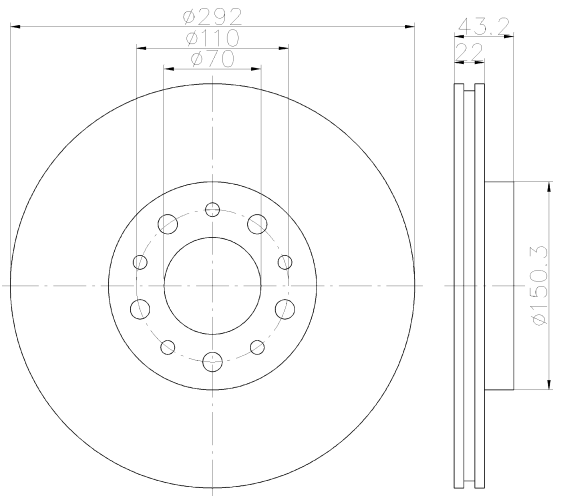

92145703

20 PRO

FIAT, OPEL, VAUXHALL

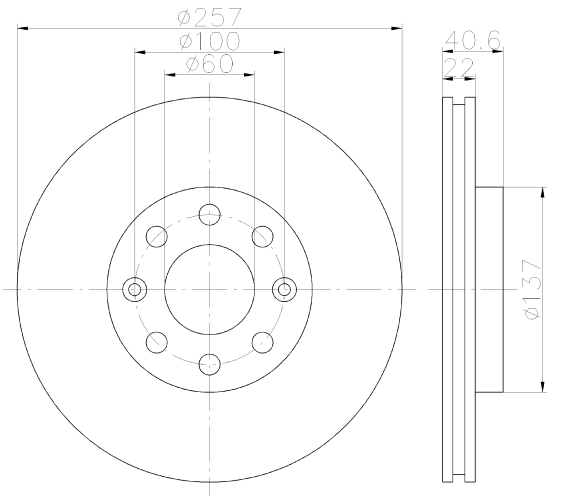

92145803

20 PRO

FIAT, OPEL, VAUXHALL

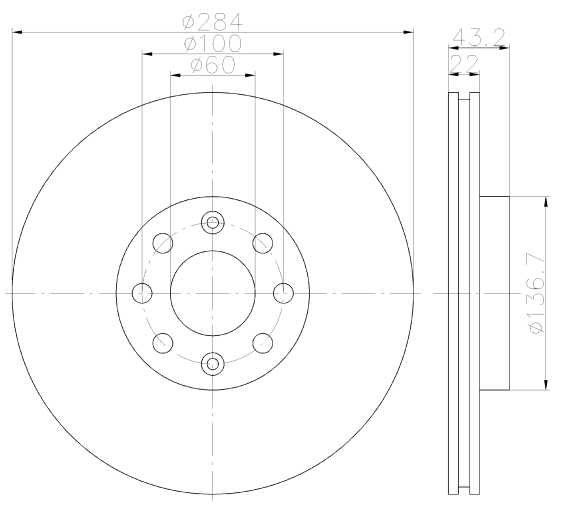

92145903

8 PRO

FIAT

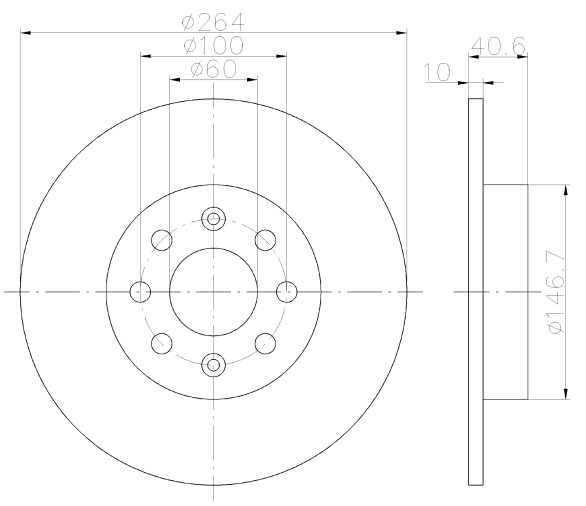

92146003

8.4 PRO

BMW

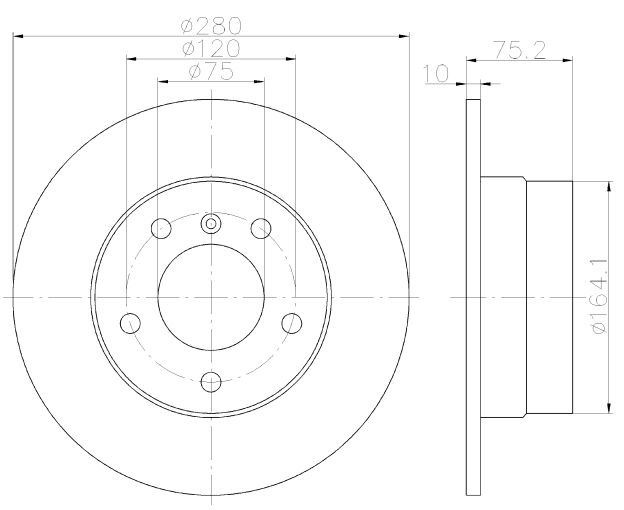

92146103

17.4 PRO

BMW

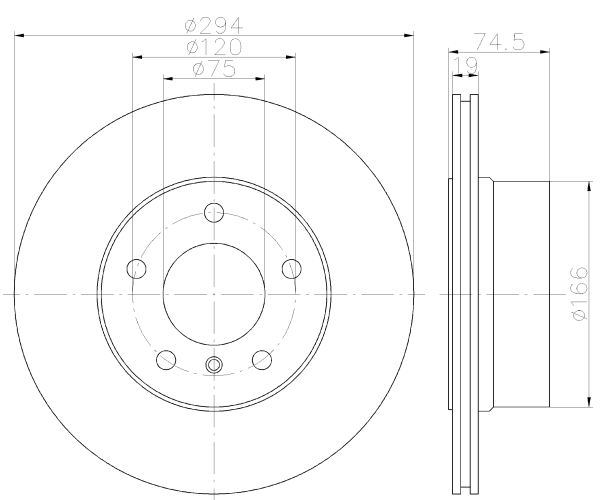

92146203

34.4 PRO

BMW

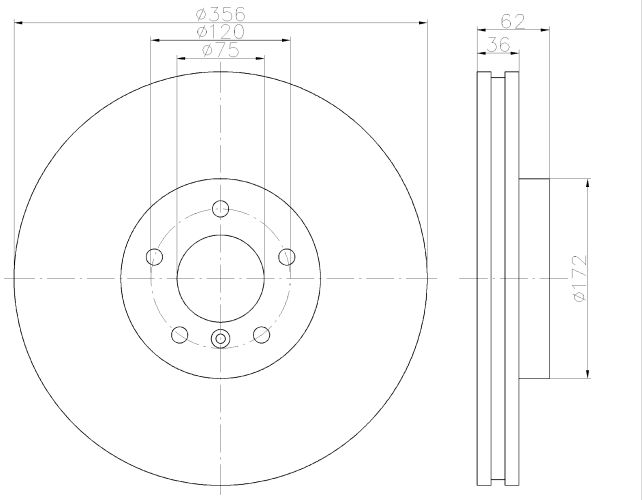

92146303

18.4 PRO

BMW

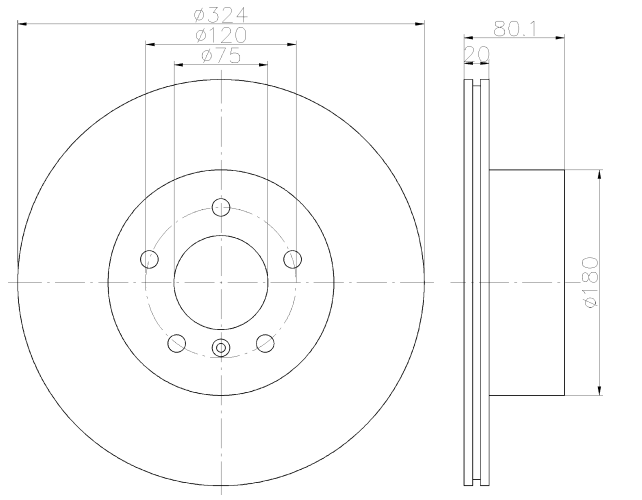

92146400

26

FORD

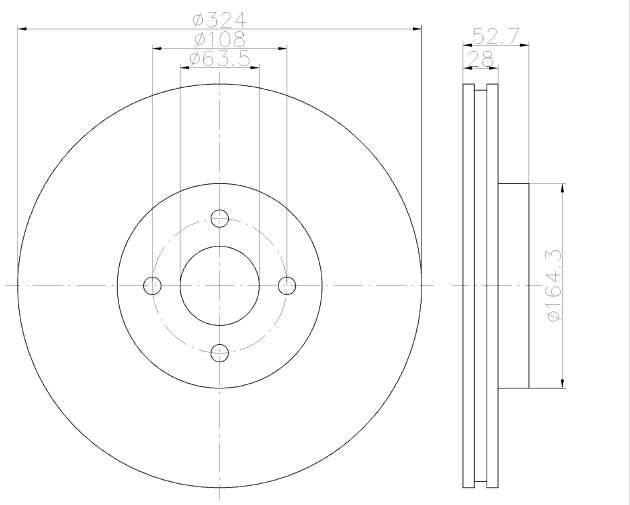

92146503

22 PRO

FORD, FORD AUSTRALIA, FORD USA, MAZDA

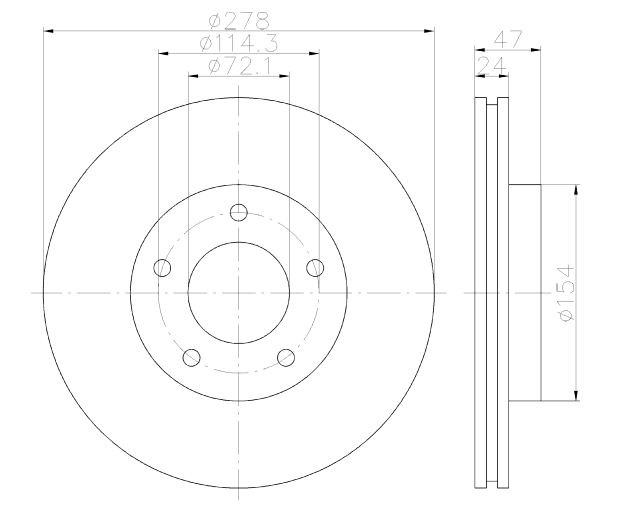

92146600

23

HONDA

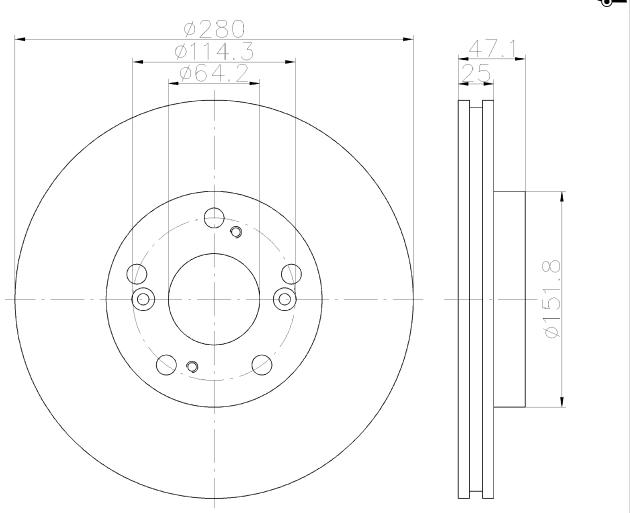

92146603

23 PRO

HONDA

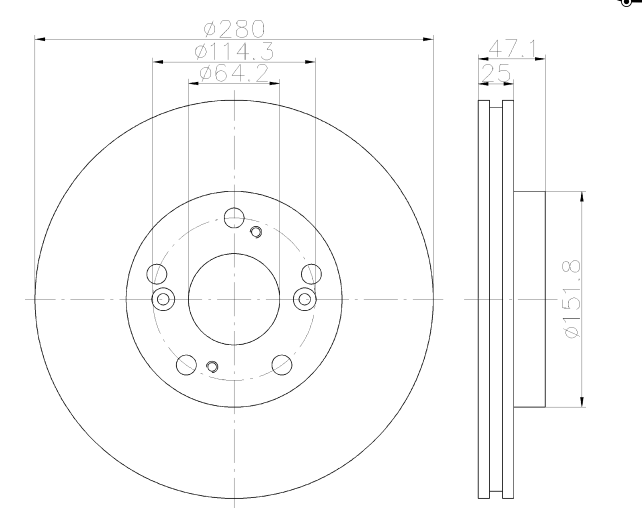

92146703

18.4 PRO

HYUNDAI

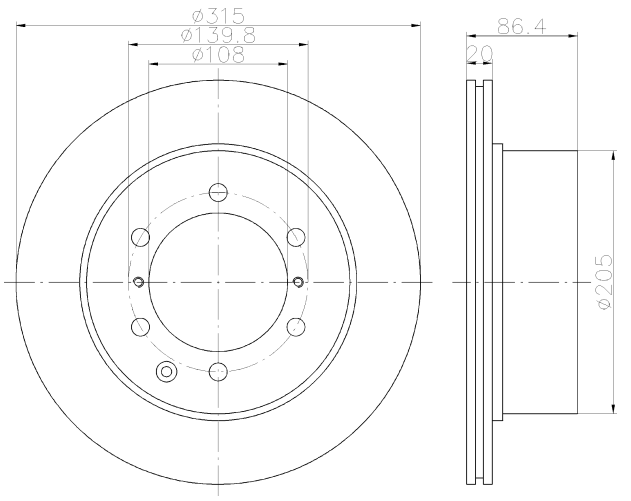

92146800

16

DODGE, HYUNDAI

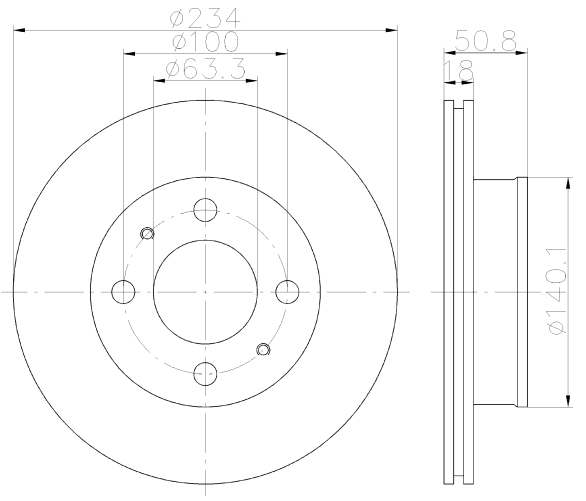

92146900

24

KIA

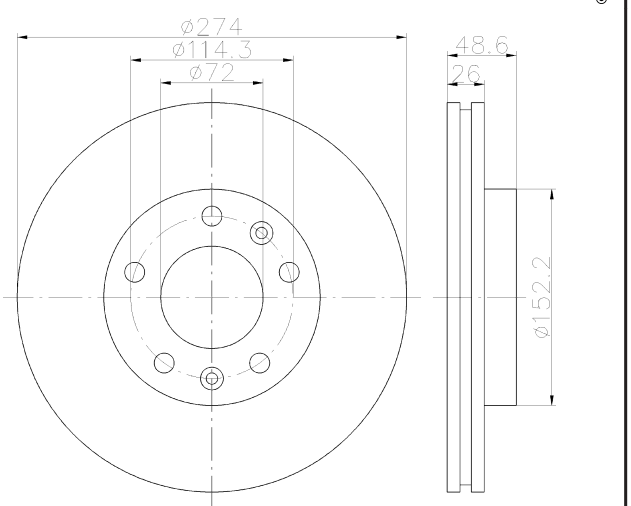

92147000

22

KIA

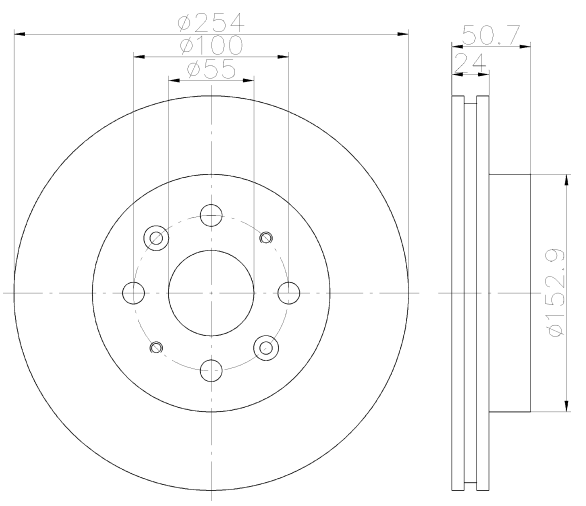

92147100

16

DODGE, HYUNDAI, KIA

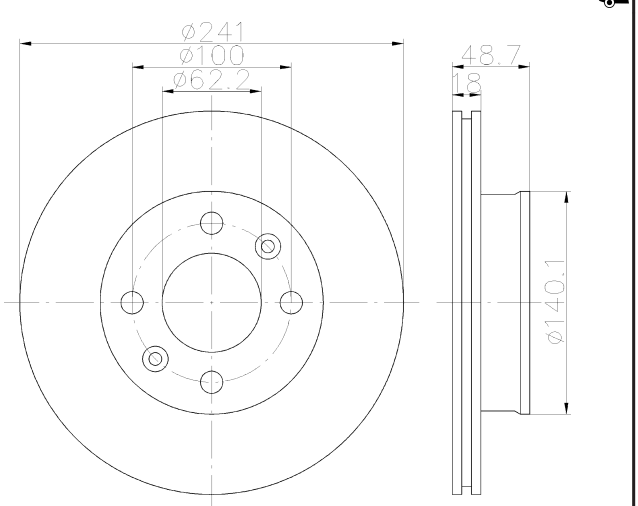

92147200

8.4

DODGE, HYUNDAI, KIA

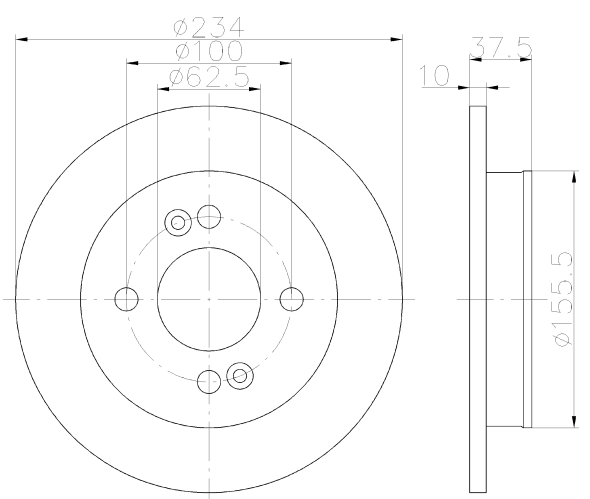

92147303

26 PRO

KIA

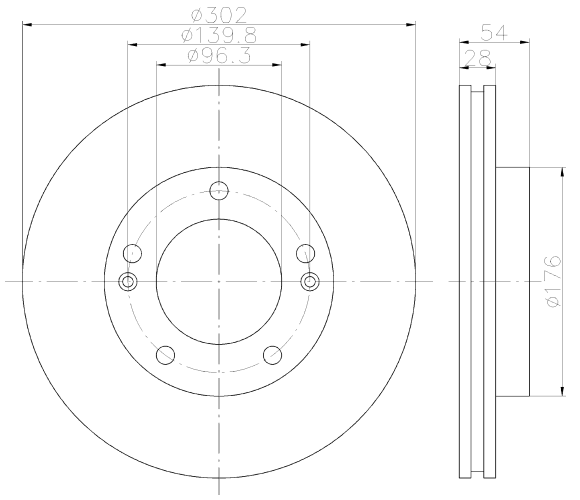

92147400

18.4

KIA

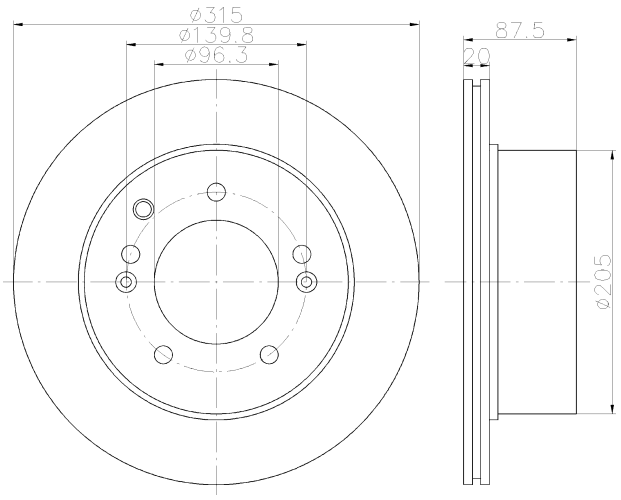

92147500

8

KIA

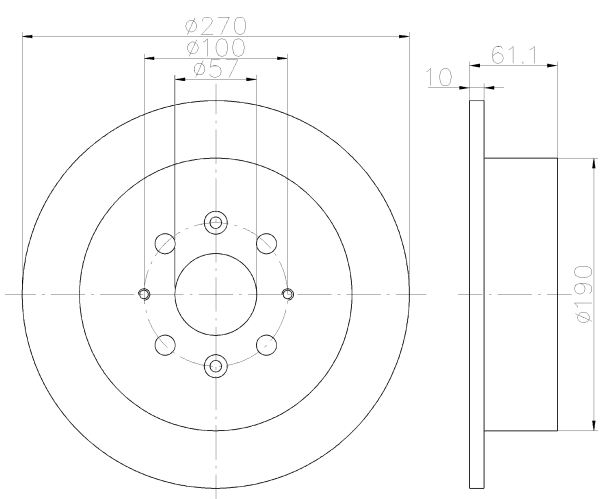

92147600

17

LAND ROVER

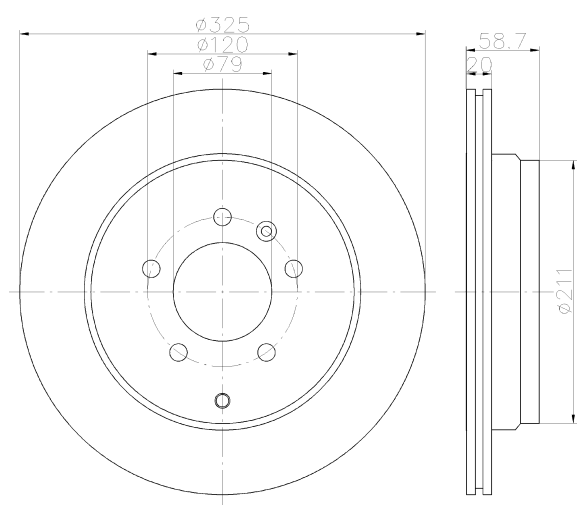

92147603

17 PRO

LAND ROVER

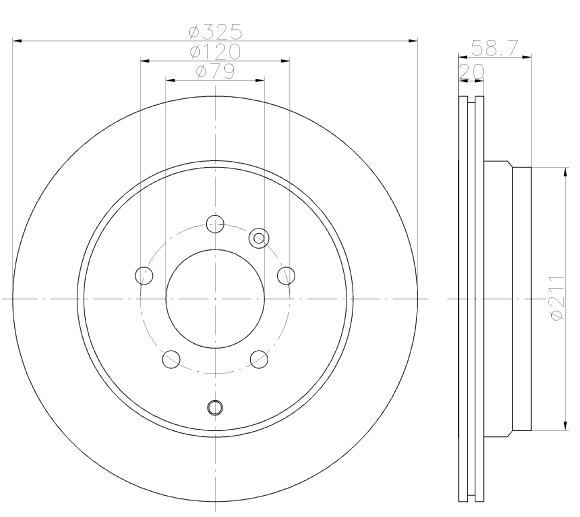

92147700

17

LAND ROVER

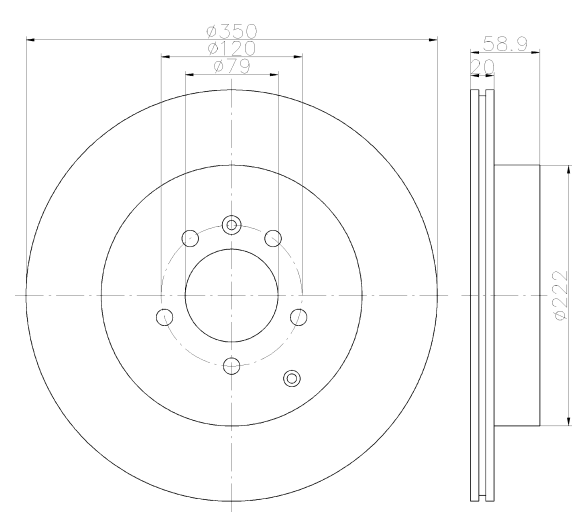

92147703

17 PRO

LAND ROVER

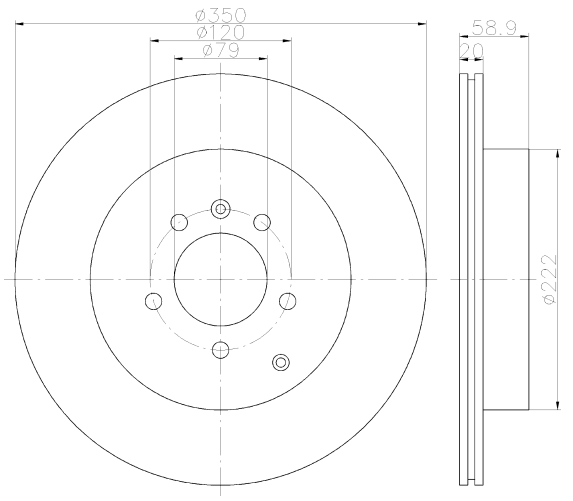

92147800

27

LEXUS

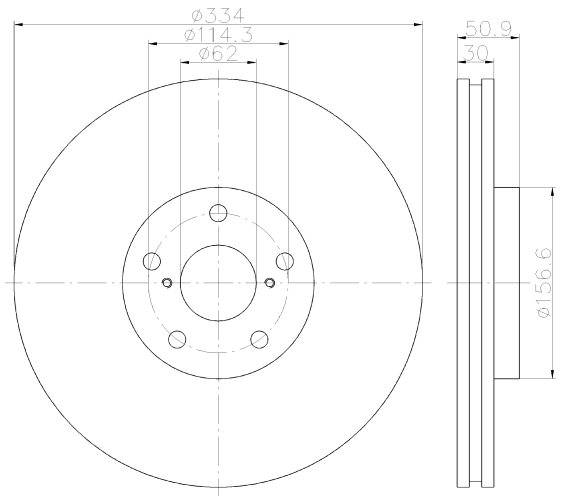

92147900

27

LEXUS

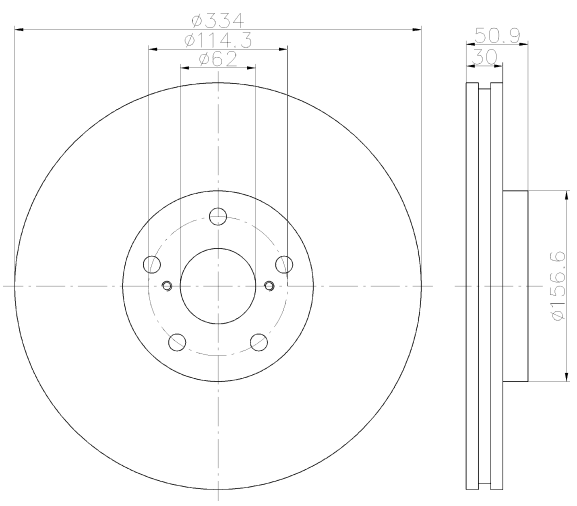

92148000

16.5

LEXUS, TOYOTA

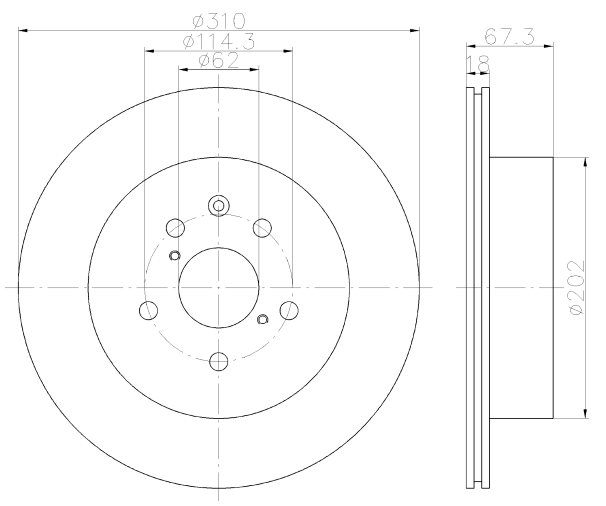

92148100

26

MAZDA

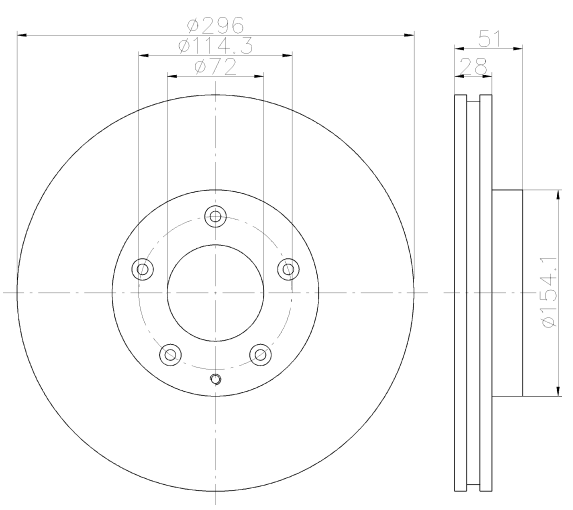

92148200

9

MAZDA

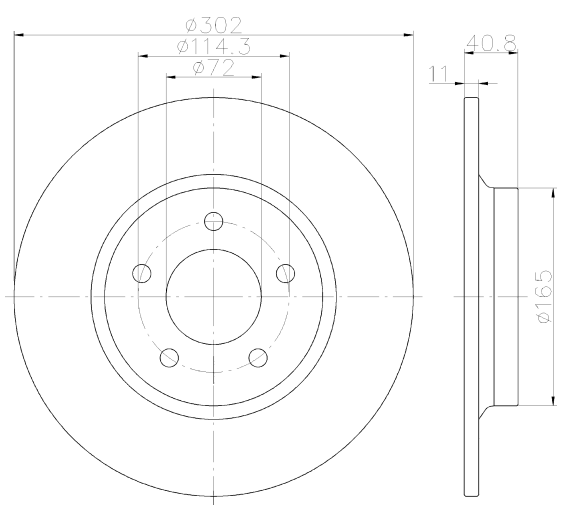

92148203

9 PRO

MAZDA

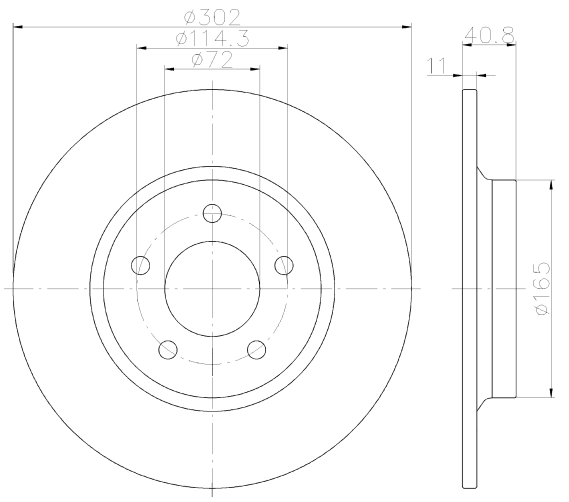

92148303

24.4 PRO

MITSUBISHI

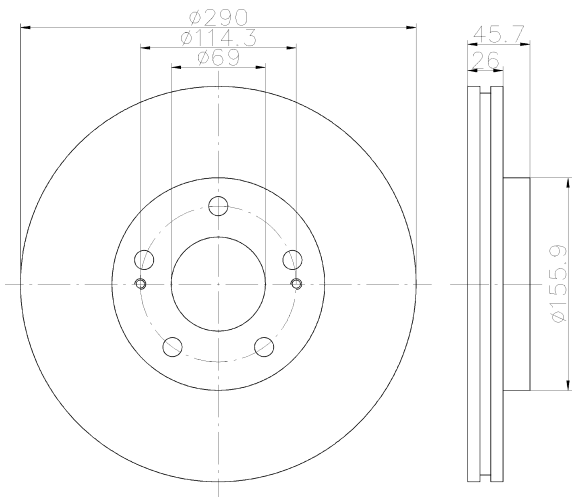

92148400

8.4

MITSUBISHI

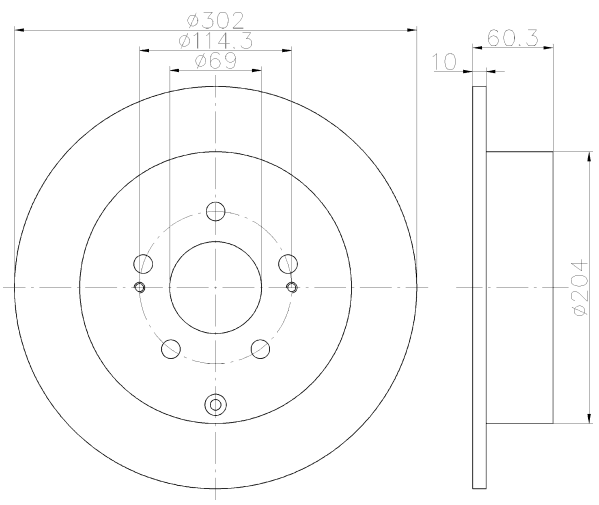

92148403

8.4 PRO

MITSUBISHI

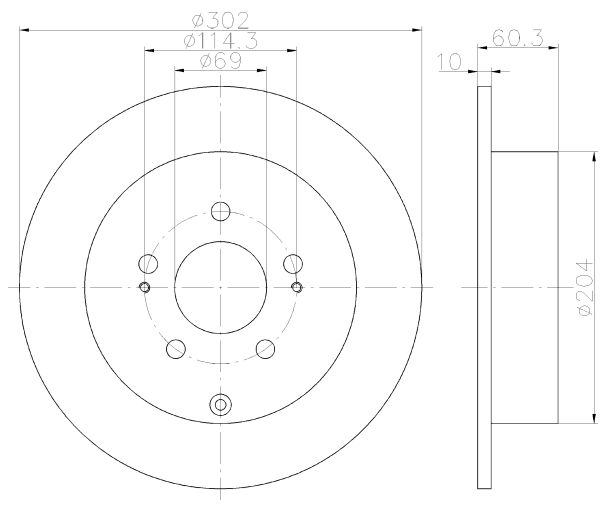

92148500

20.4

MITSUBISHI

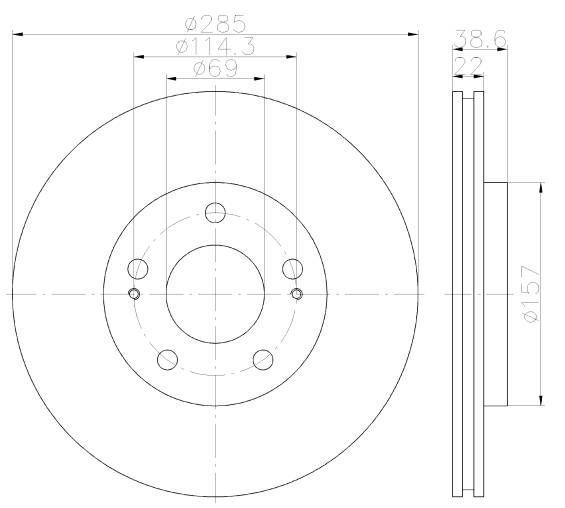

92148600

8.4

MITSUBISHI

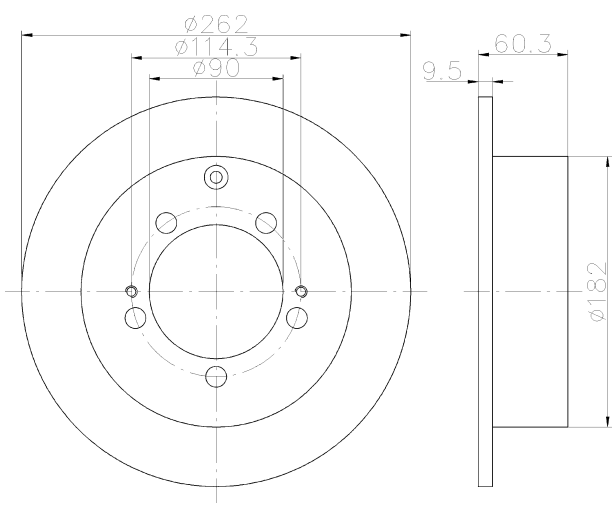

92148700

24.4

MITSUBISHI

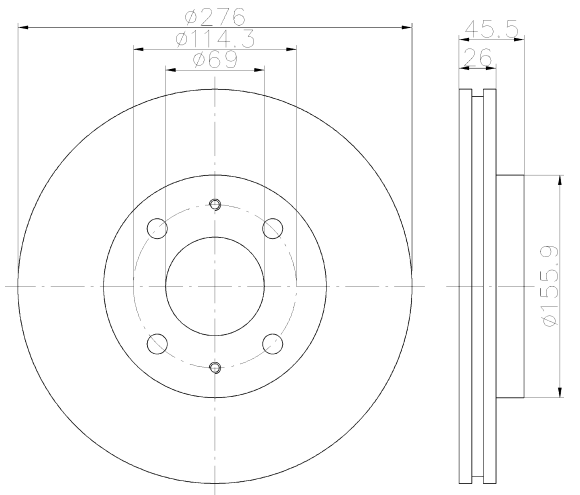

92148800

18

NISSAN

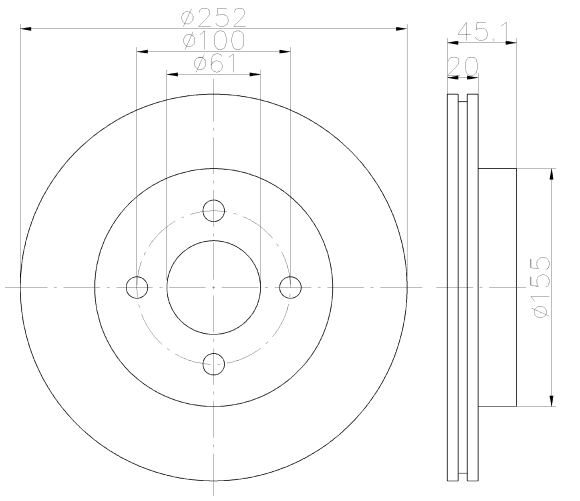

92148903

18 PRO

OPEL, SUZUKI, VAUXHALL

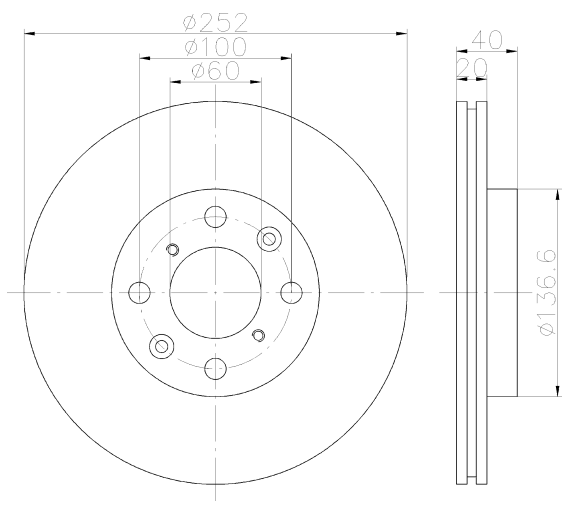

92149000

20

SUZUKI

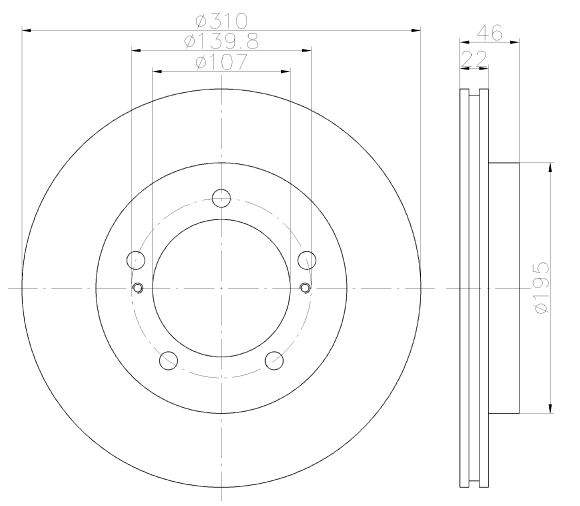

92149100

23

FORD, FORD AUSTRALIA, VOLVO, VOLVO (CHANGAN)

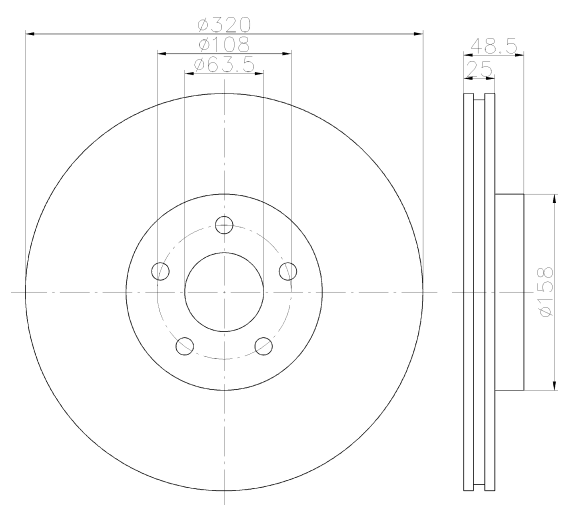

92149103

23 PRO

FORD, FORD AUSTRALIA, VOLVO, VOLVO (CHANGAN)

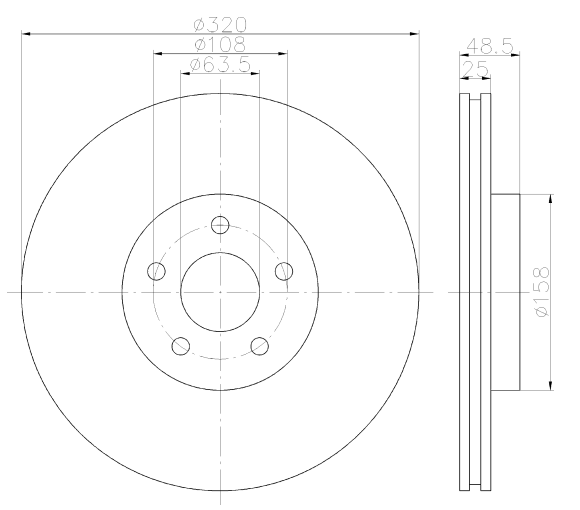

92149203

10 PRO

VOLVO

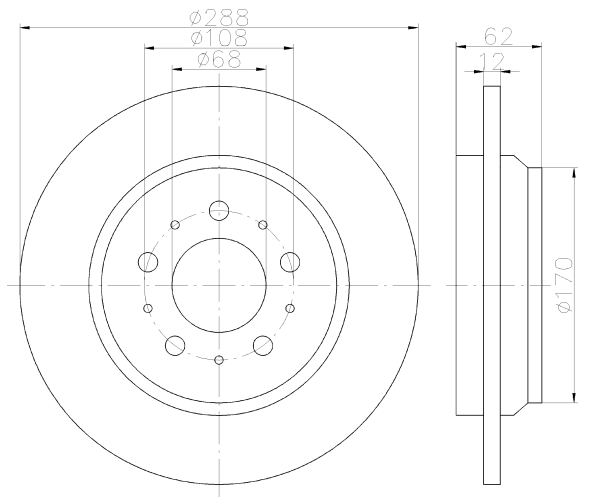

92149300

14

INFINITI, NISSAN

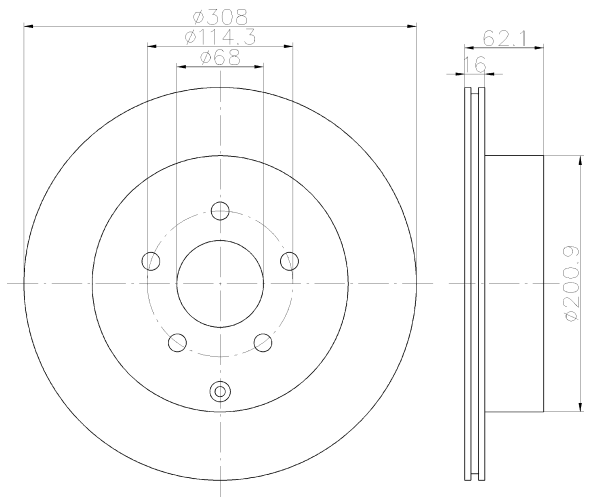

92149303

14 PRO

INFINITI, NISSAN

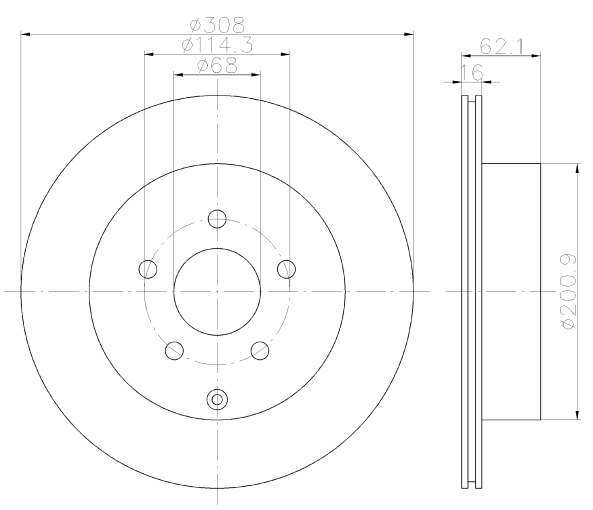

92149400

20.4

HYUNDAI, MITSUBISHI

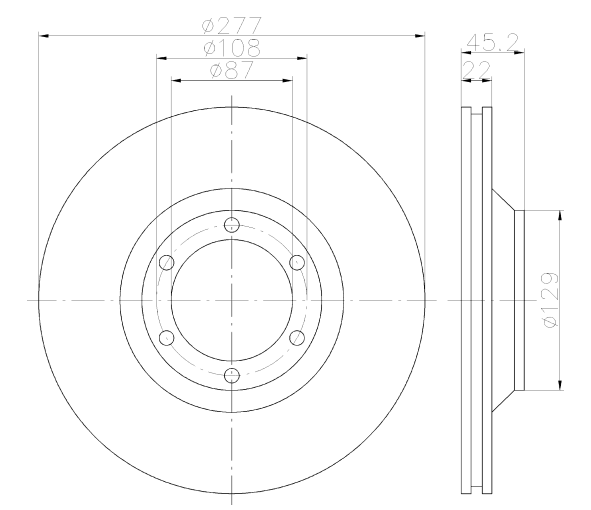

92149503

21.8 PRO

RENAULT

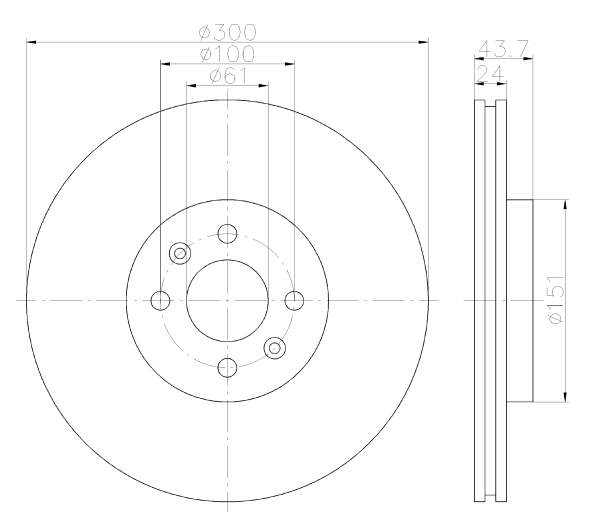

92149600

21

TOYOTA

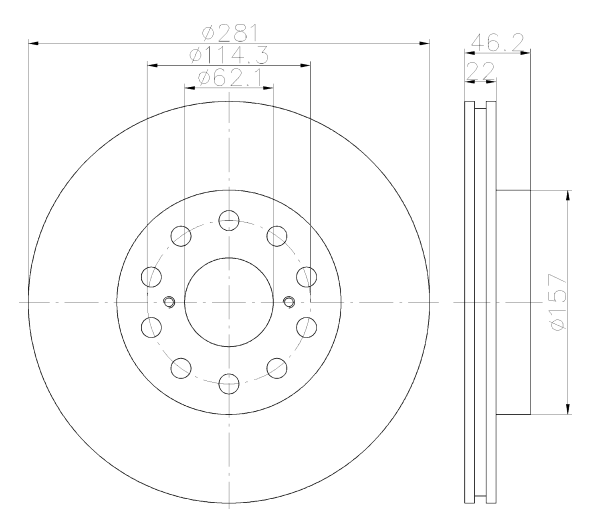

92149700

15

TOYOTA

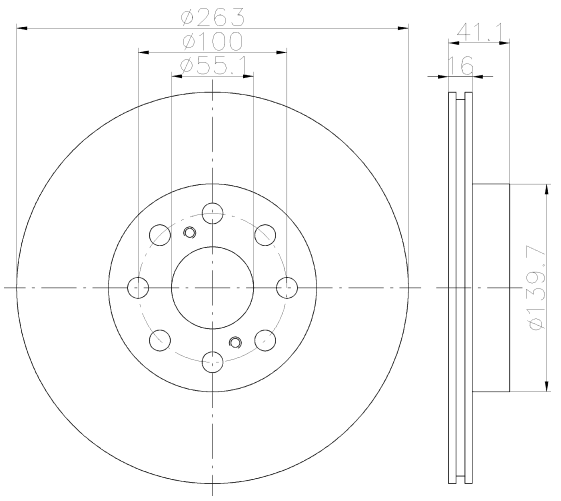

92149803

25 PRO

HSV, OPEL, VAUXHALL

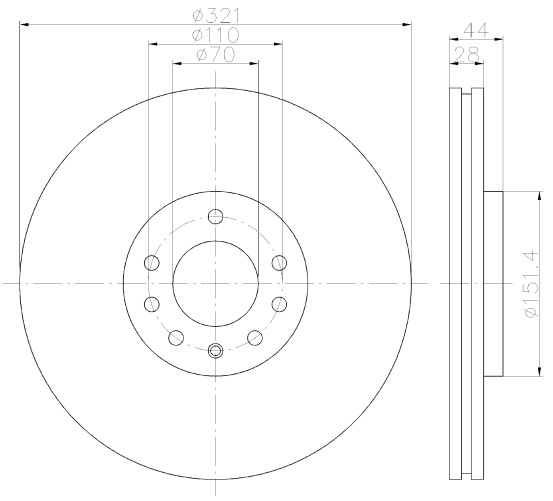

92149900

32

PORSCHE

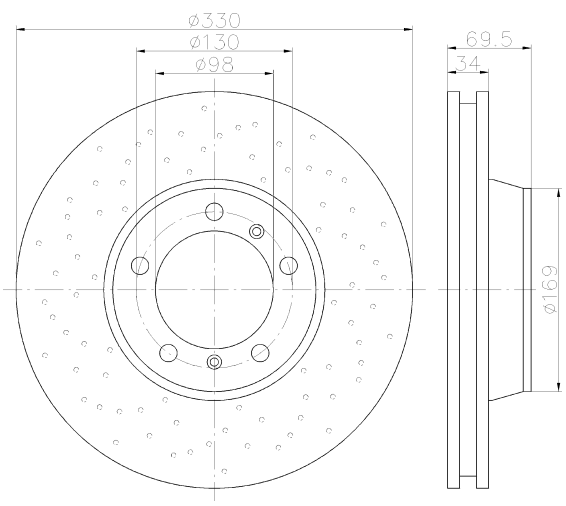

92150000

32

PORSCHE

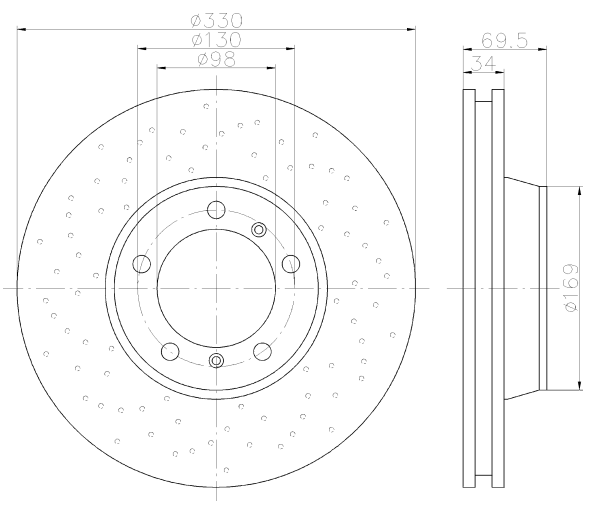

92150400

15

LEXUS, TOYOTA

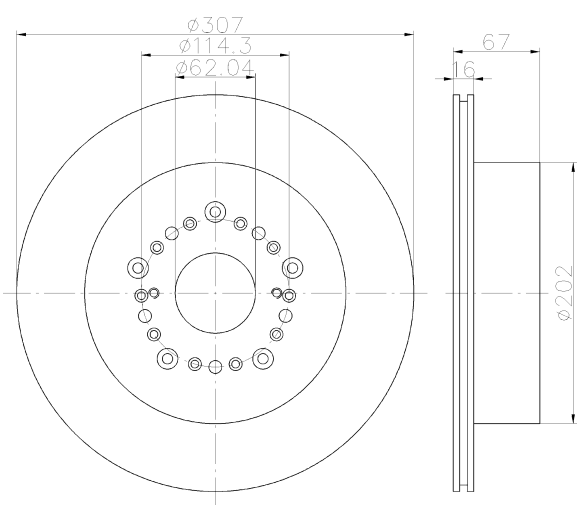

92150603

29.4 PRO

MERCEDES-BENZ

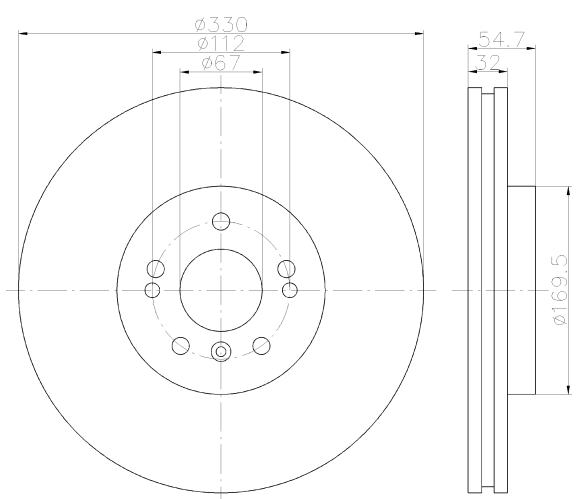

92150605

29.4 PRO

MERCEDES-BENZ

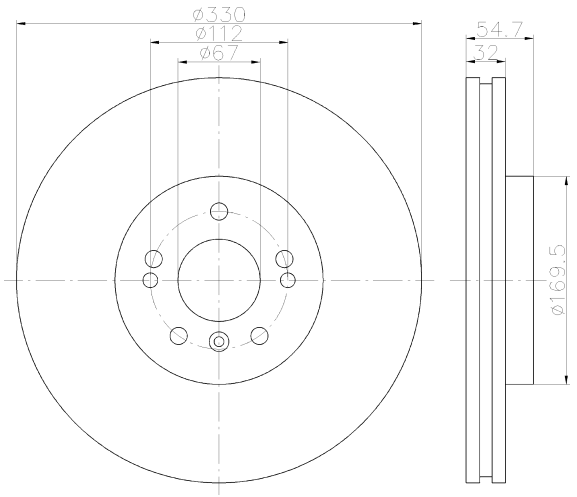

92150703

29.4 PRO

MERCEDES-BENZ

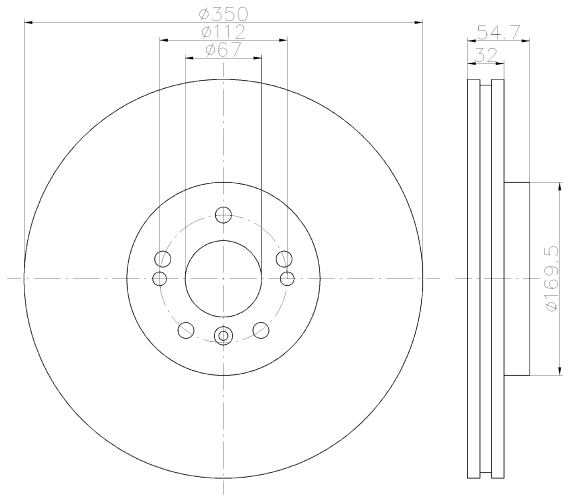

92150705

29.4 PRO

MERCEDES-BENZ

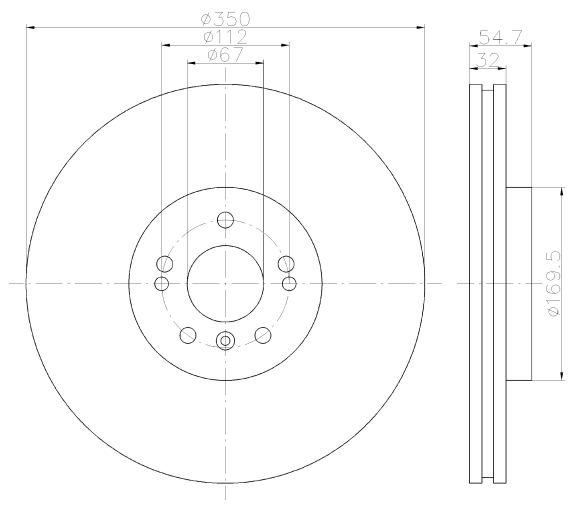

92150803

11.4 PRO

MERCEDES-BENZ

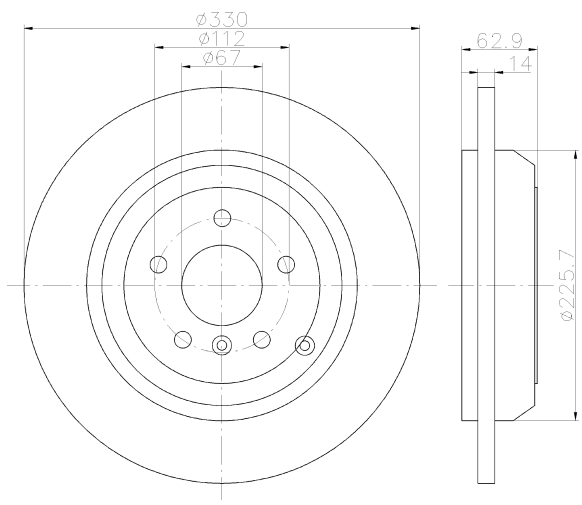

92150903

19.4 PRO

MERCEDES-BENZ

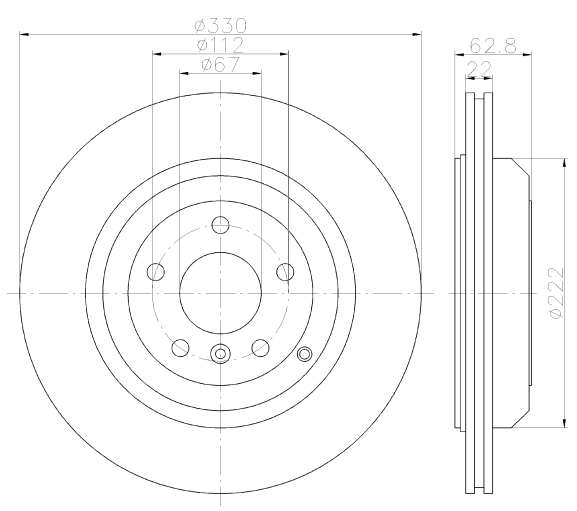

92151000

26

MERCEDES-BENZ

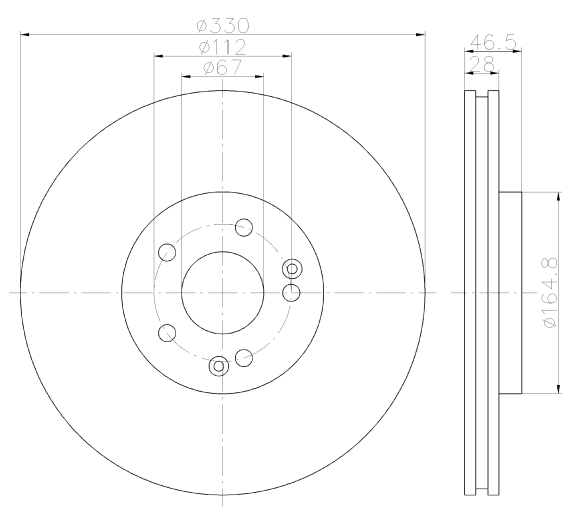

92151003

26 PRO

MERCEDES-BENZ

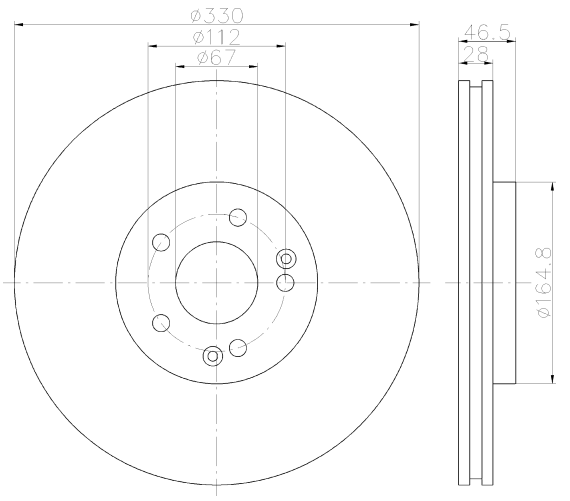

92151303

36 PRO

AUDI

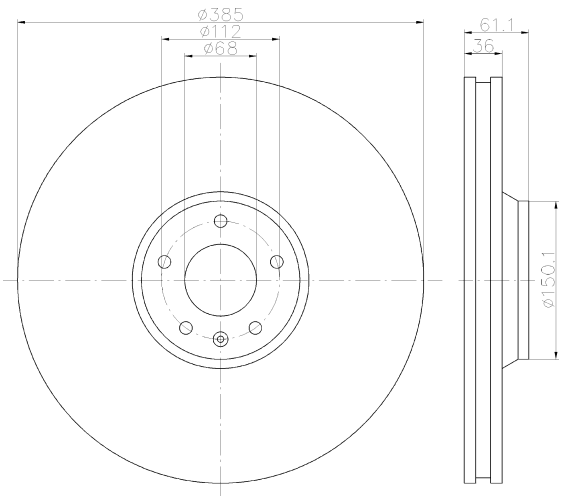

92151403

26 PRO

AUDI, PORSCHE, VOLKSWAGEN

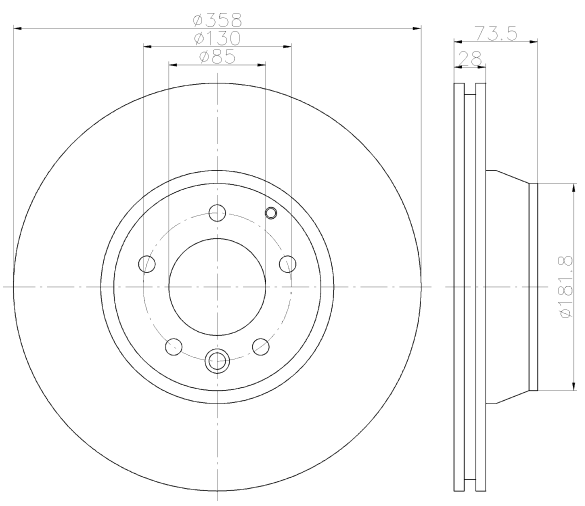

92151803

25 PRO

FORD, FORD AUSTRALIA

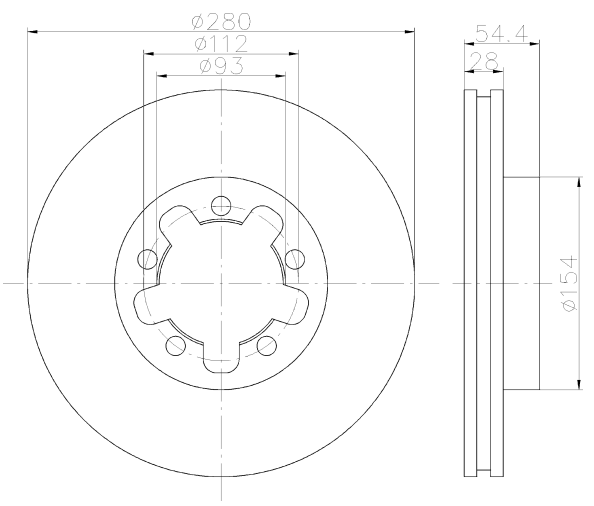

92151903

25 PRO

FORD, FORD AUSTRALIA

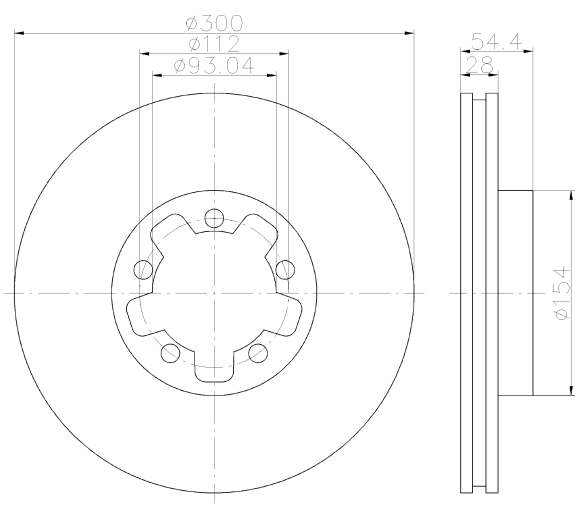

92152000

15

FORD, FORD AUSTRALIA

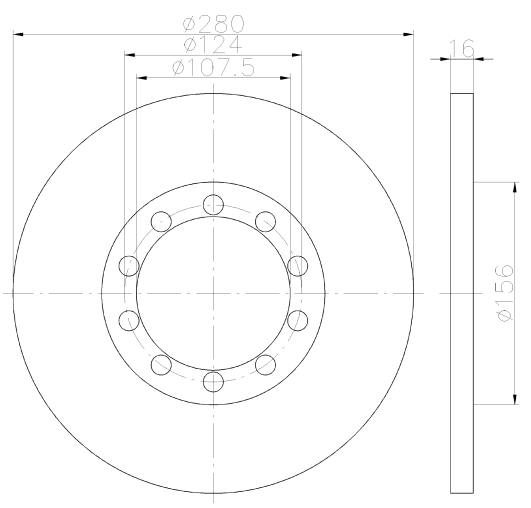

92152100

28.4

MERCEDES-BENZ

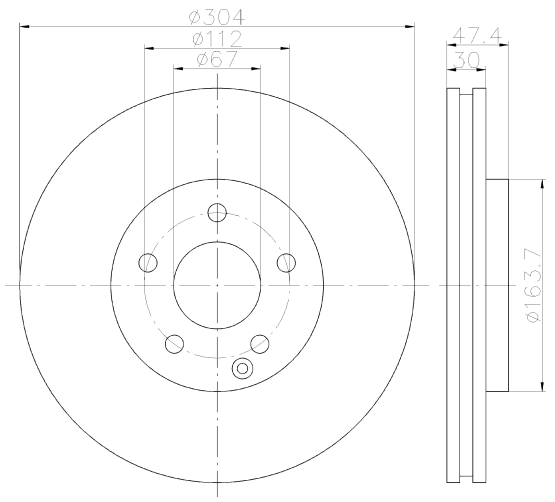

92152103

28.4 PRO

MERCEDES-BENZ

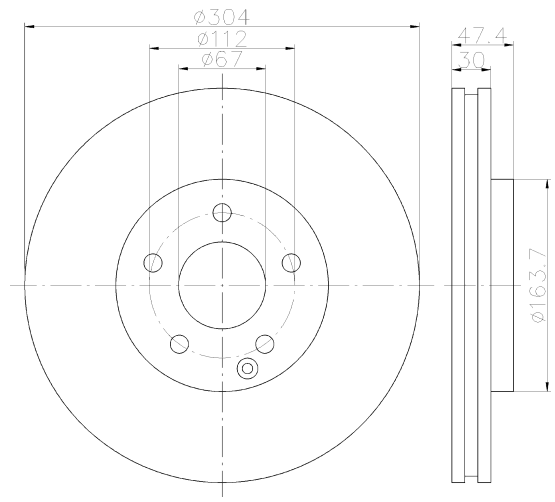

92152105

28.4 PRO

MERCEDES-BENZ

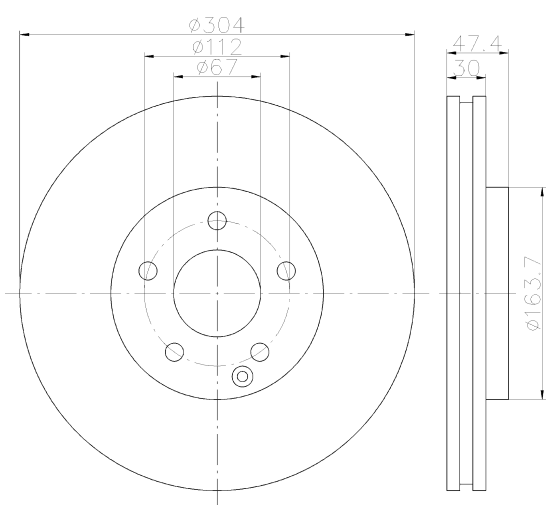

92152200

20

AUDI, VOLKSWAGEN

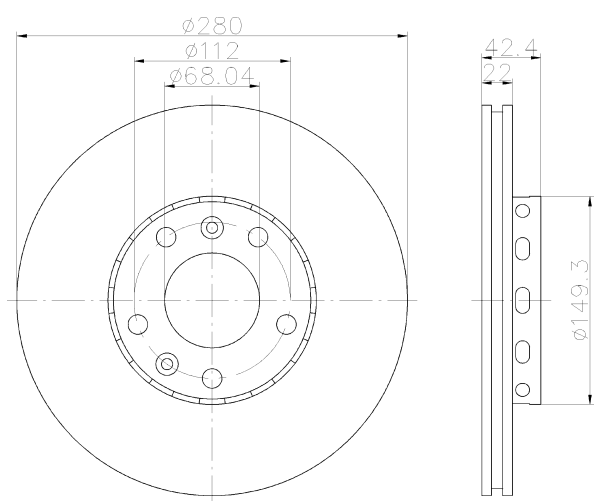

92152303

20 PRO

AUDI, VOLKSWAGEN

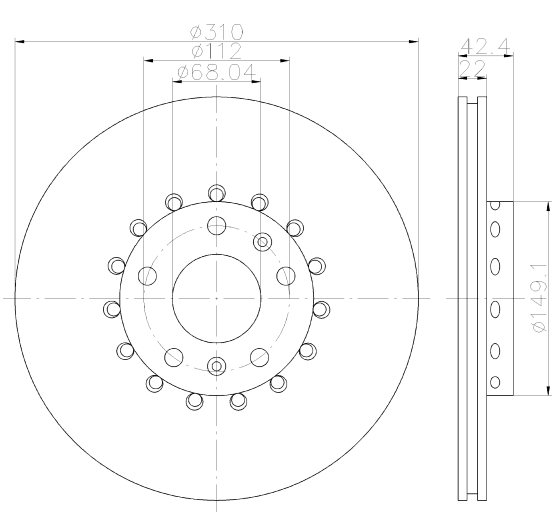

92152403

18.4 PRO

CHRYSLER, DODGE, PLYMOUTH

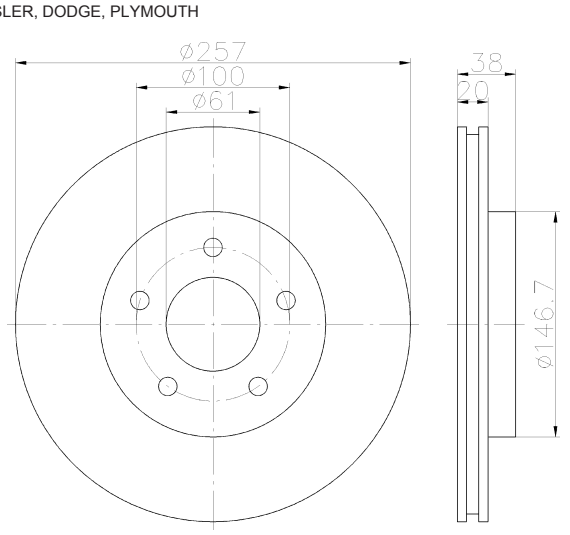

92152500

8

MG

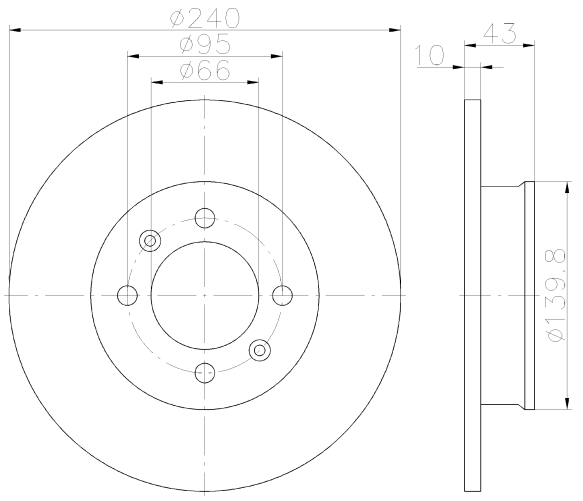

92152800

18

MAZDA

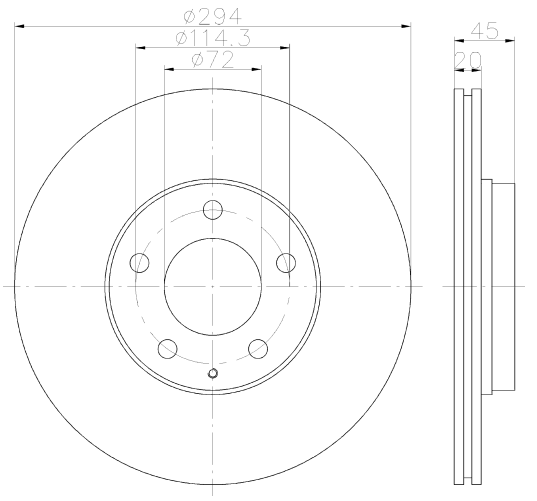

92153300

8

SUZUKI

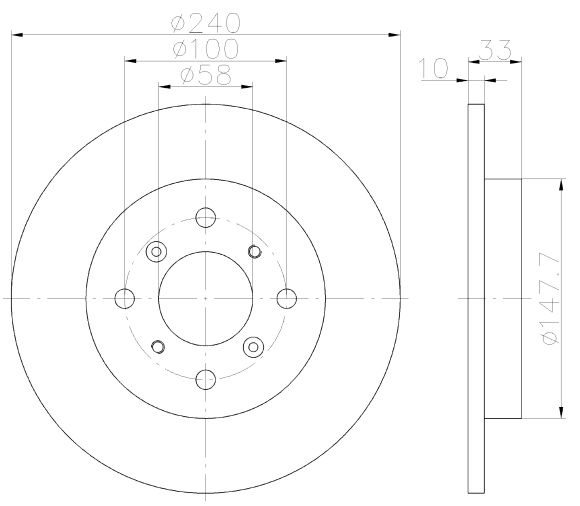

92153400

22

LDV, MAXUS (SAIC MOTOR)

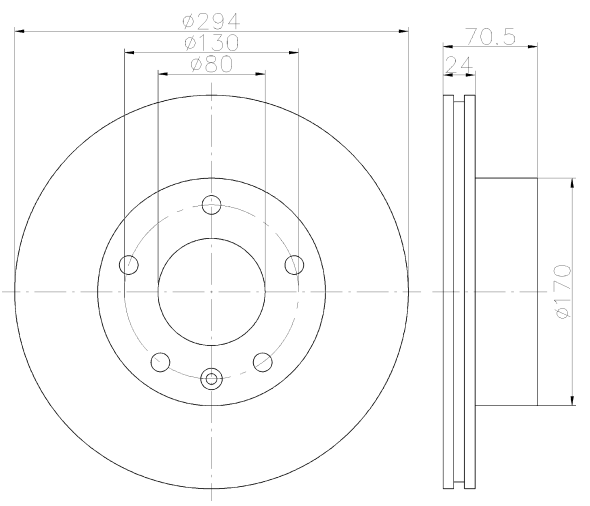

92153700

10 ABS

NISSAN, OPEL, RENAULT, VAUXHALL

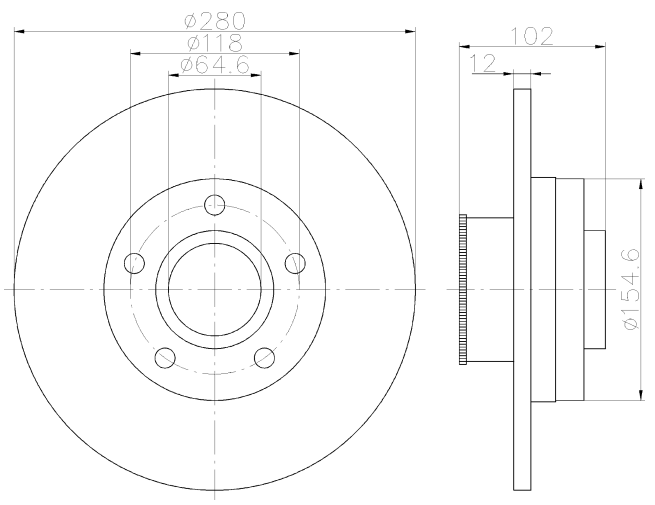

92153800

8 ABS

SEAT, VOLKSWAGEN

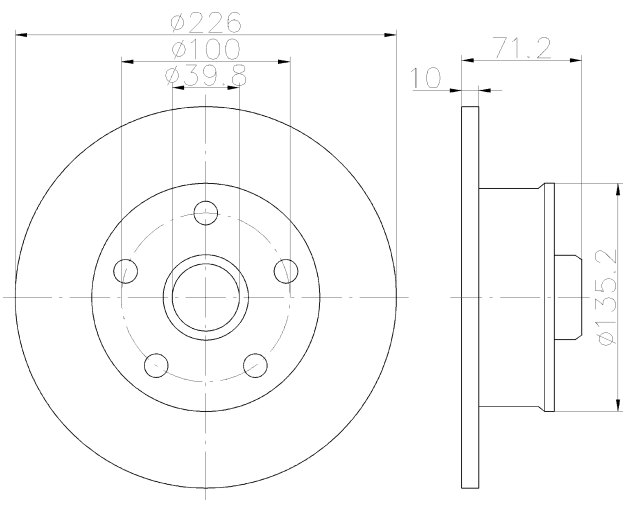

92154000

7 ABS

RENAULT

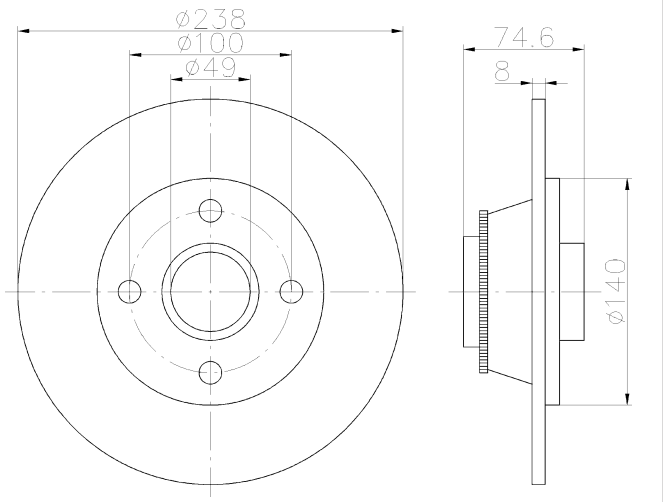

92154203

8 PRO

SEAT, VOLKSWAGEN

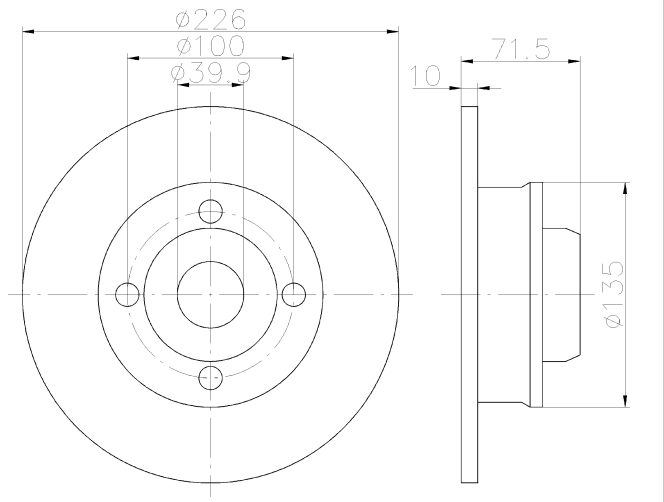

92154303

8 PRO

AUDI

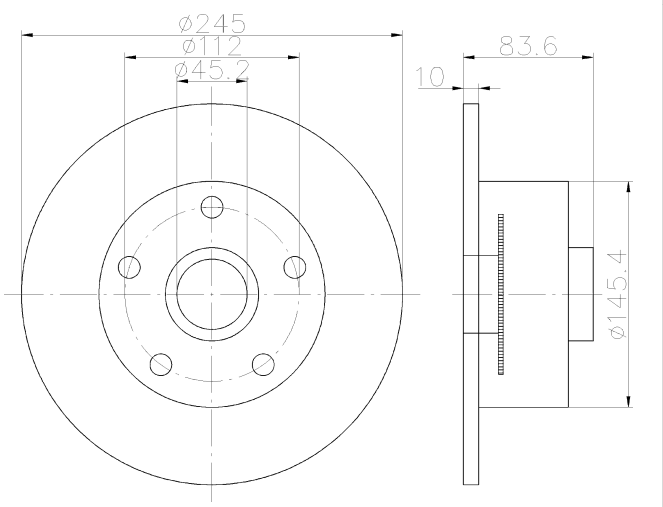

92154400

7 ABS

NISSAN, RENAULT

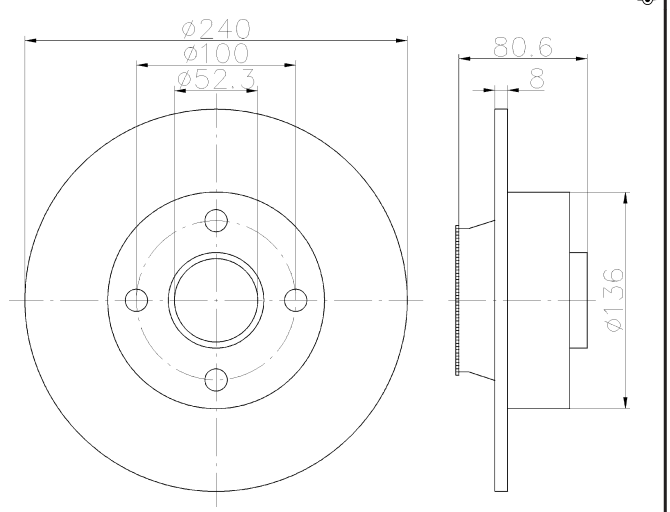

92154500

9 ABS

RENAULT

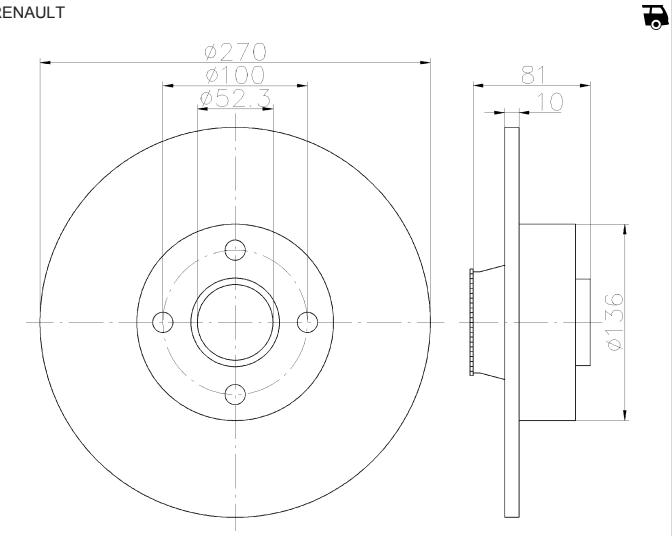

92154703

28 PRO

AUDI

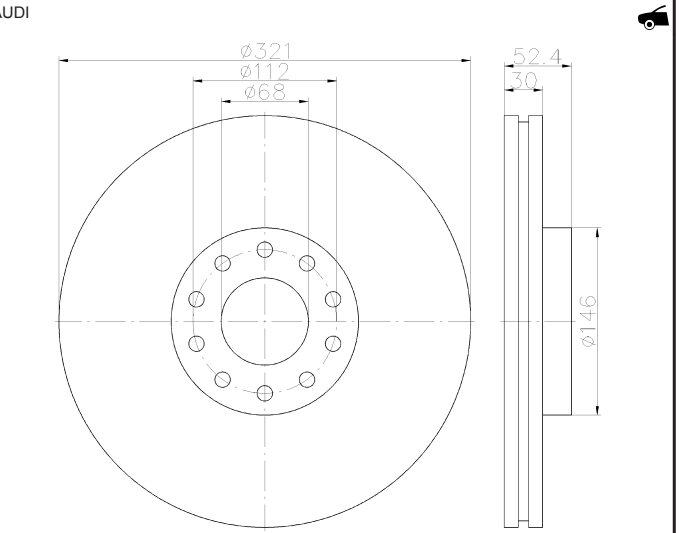

92154903

18.4 PRO

BMW, BMW (BRILLIANCE), CHEVROLET (SGM), CHEVROLET (SGMW), HONDA (GAC)

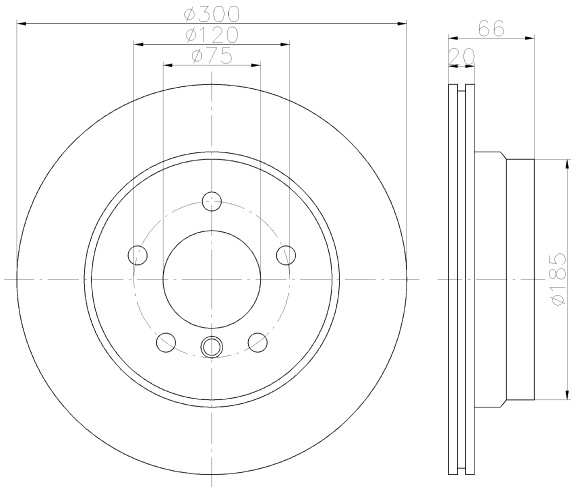

92155203

22.4 PRO

BMW

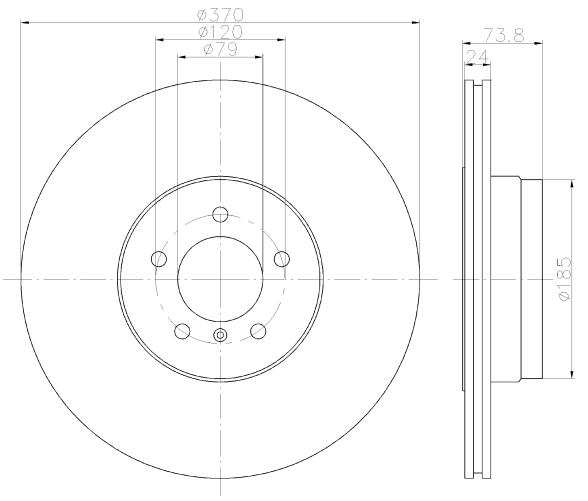

92155303

28.4 PRO

BMW

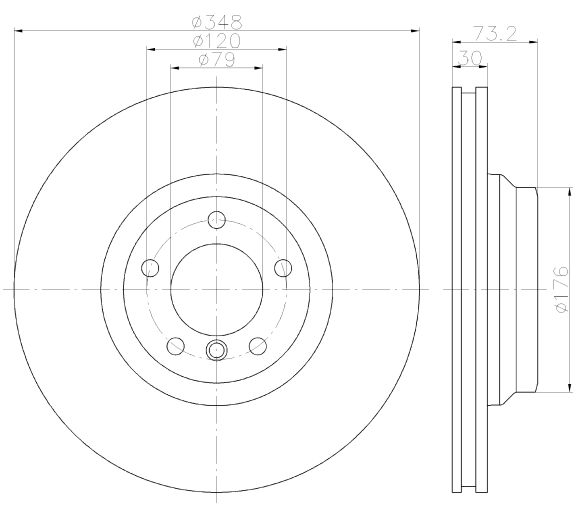

92155400

26

FIAT

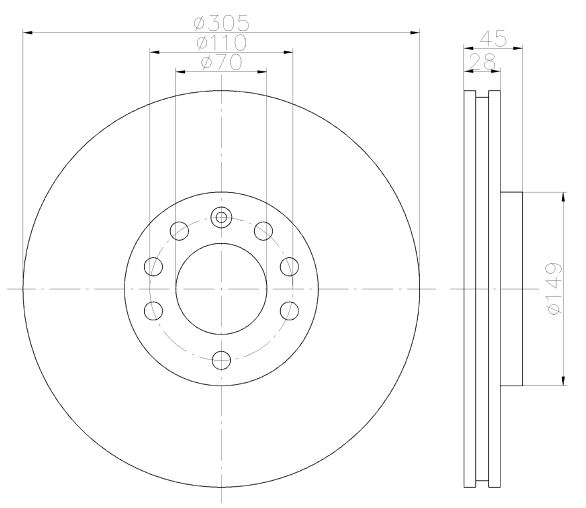

92155503

8 PRO

SMART

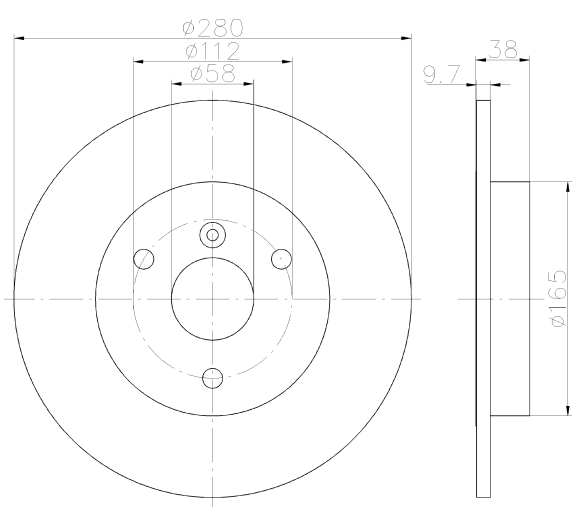

92155600

22.4

DAEWOO

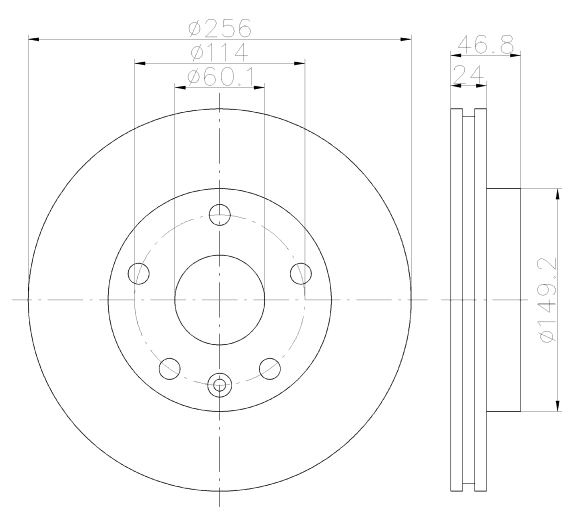

92155700

25

IVECO

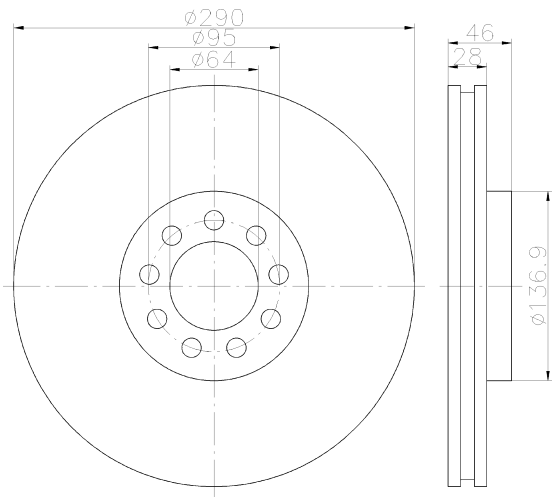

92155900

25

IVECO

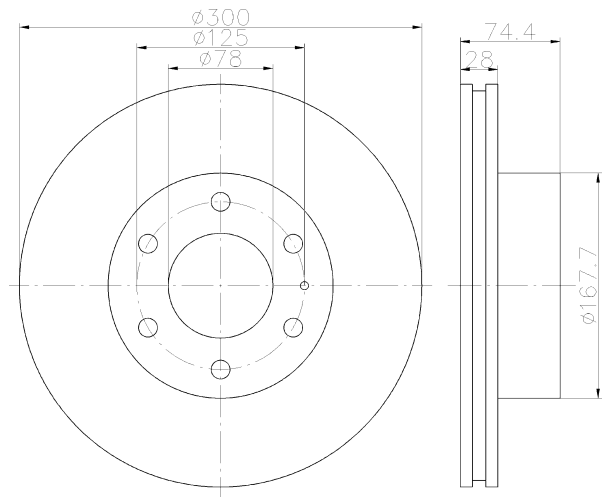

92156100

19

DAIHATSU, PERODUA, TOYOTA

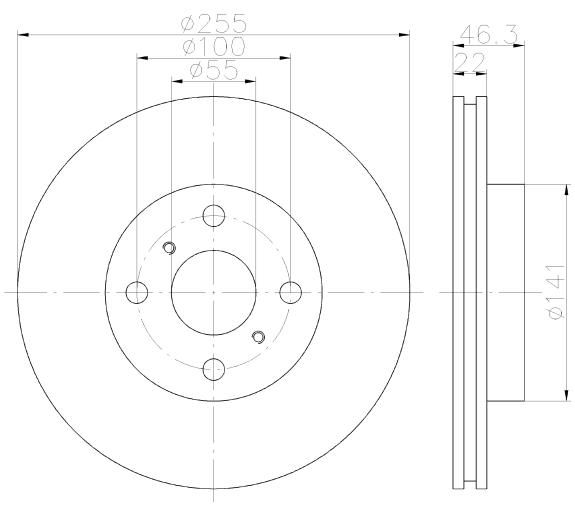

92156200

19

DAIHATSU, TOYOTA

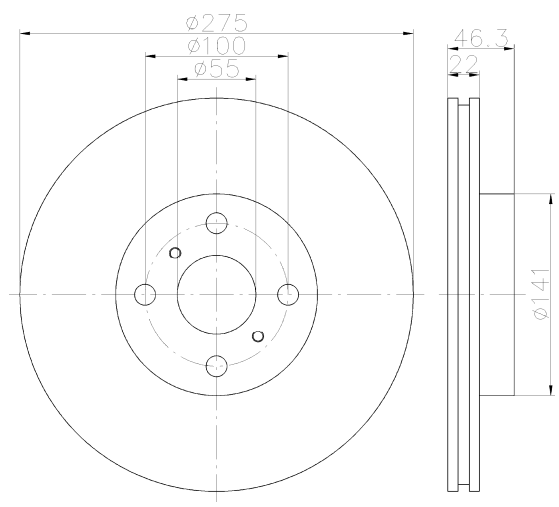

92156300

7.5

ASTON MARTIN, DAIHATSU, TOYOTA

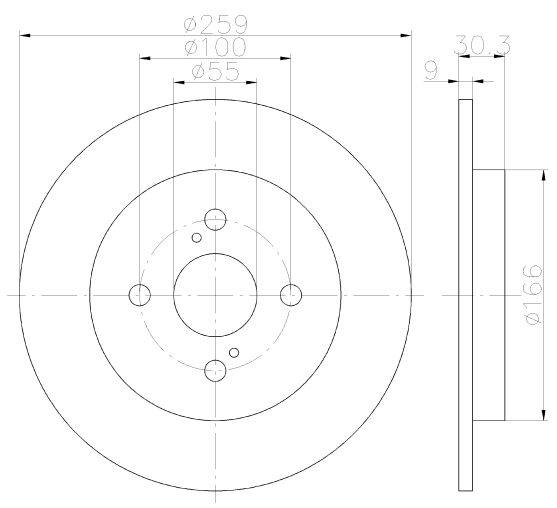

92156400

23

OPEL, VAUXHALL

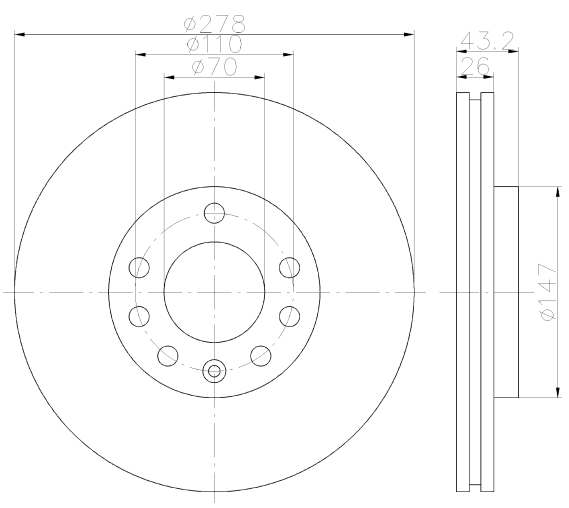

Illustrations

92156500

23

SUZUKI

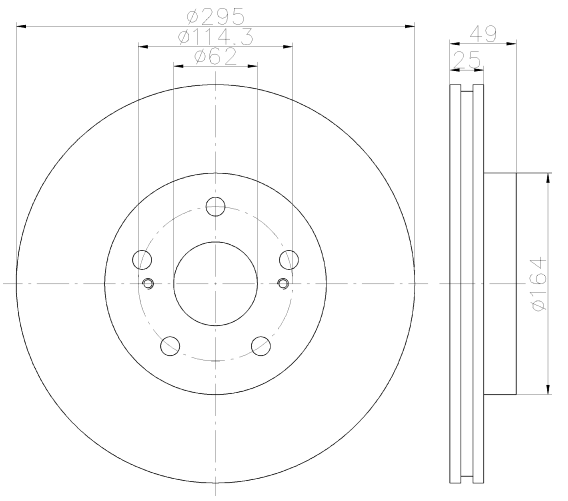

92156600

20

FIAT, SUZUKI

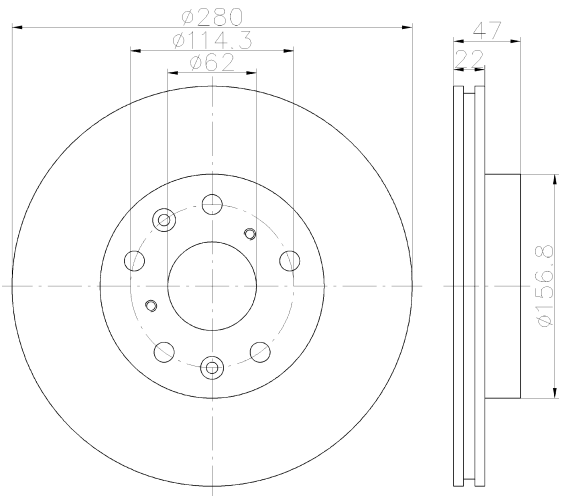

92156803

8.4 PRO

HYUNDAI, HYUNDAI (BEIJING), KIA, KIA (DYK)

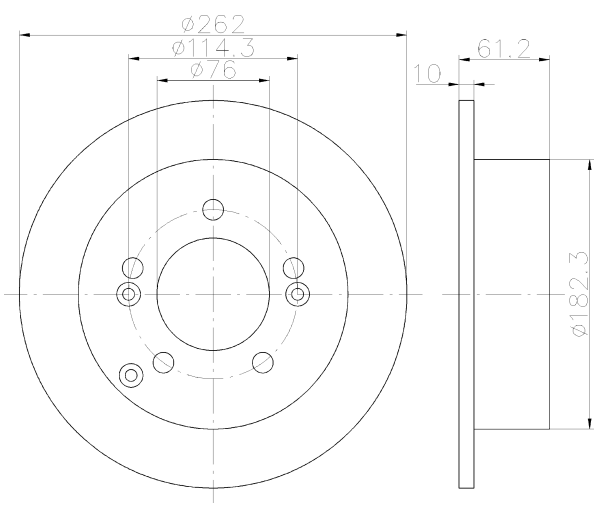

92156900

26

CITROËN, FIAT, PEUGEOT

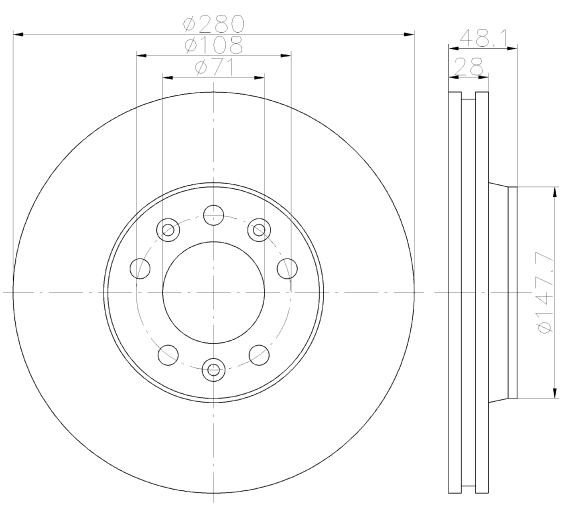

92157000

26

CITROËN, FIAT, PEUGEOT, TOYOTA

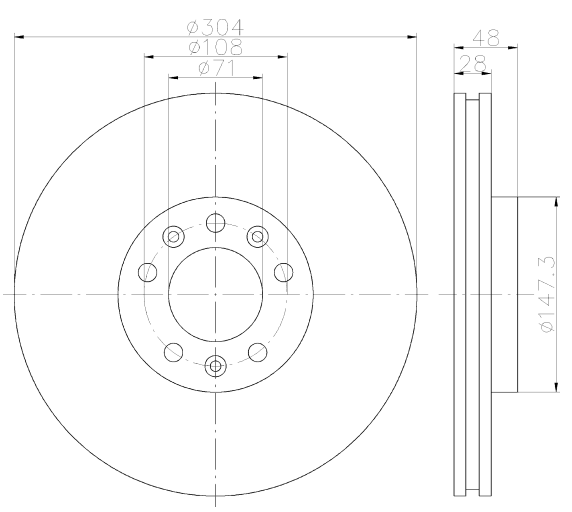

92157100

13

CITROËN, FIAT, PEUGEOT, TOYOTA

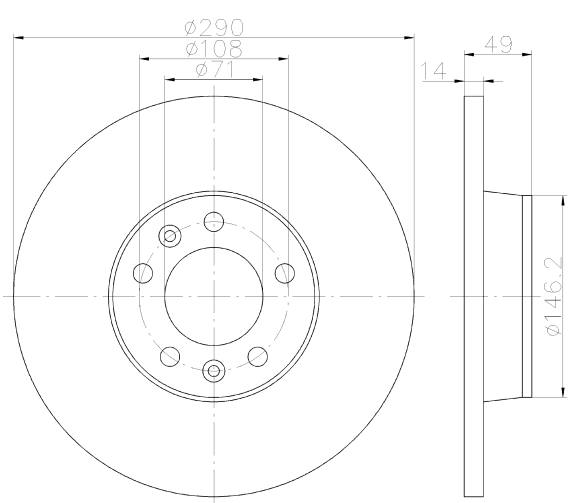

92157200

25.9

CITROËN, FIAT, PEUGEOT

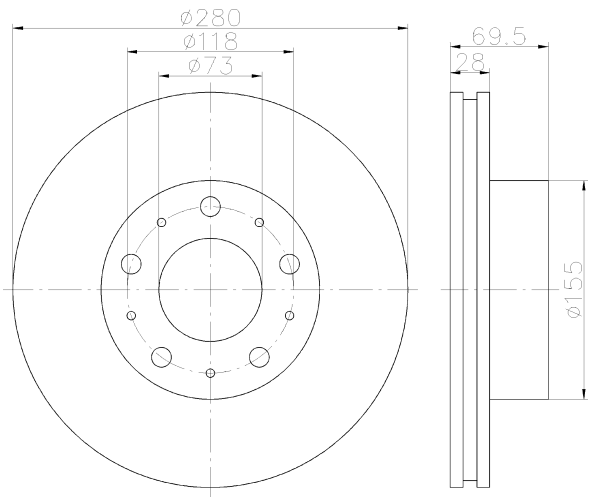

92157300

29.9

CITROËN, FIAT, PEUGEOT

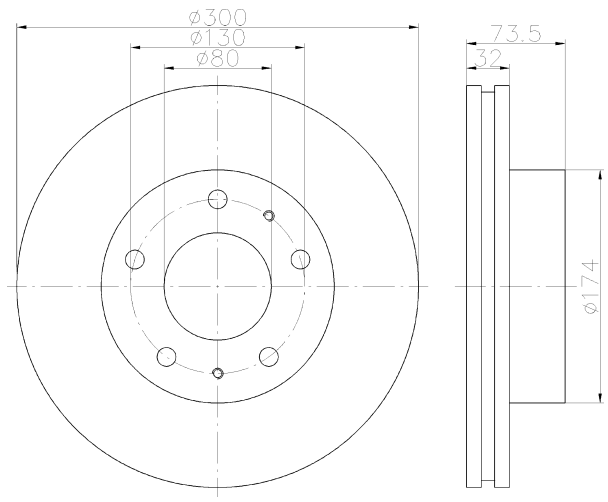

92157400

14.2

CITROËN, FIAT, PEUGEOT

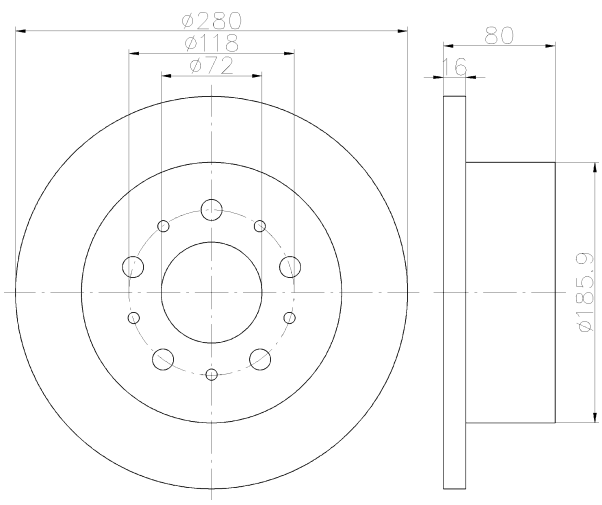

92157500

14.2

CITROËN, FIAT, PEUGEOT

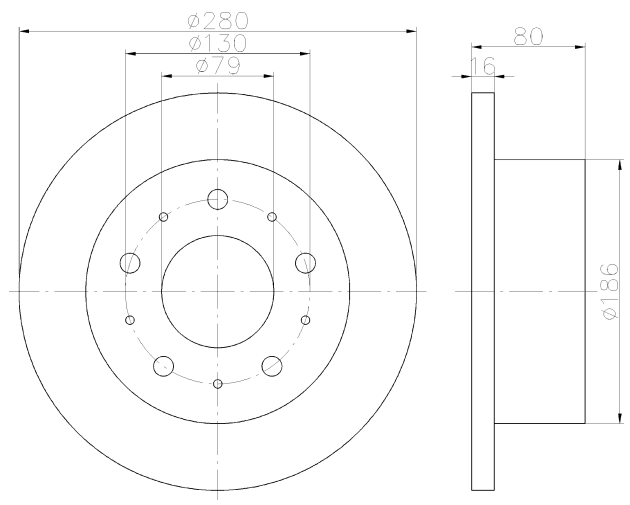

92157600

14.2

CITROËN, FIAT, PEUGEOT

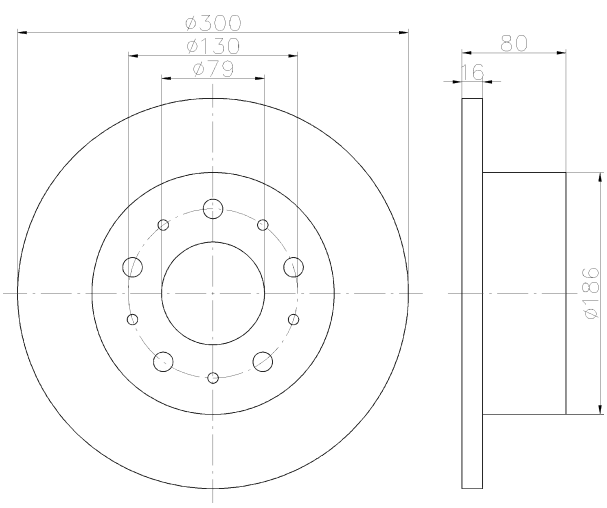

92157700

25.4

RENAULT

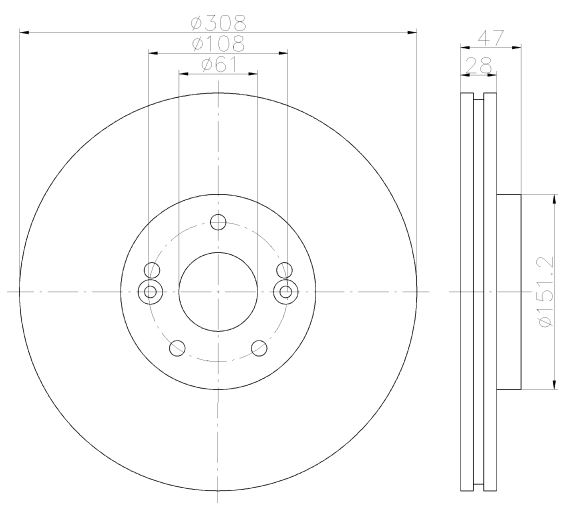

92157903

20.4 PRO

MINI

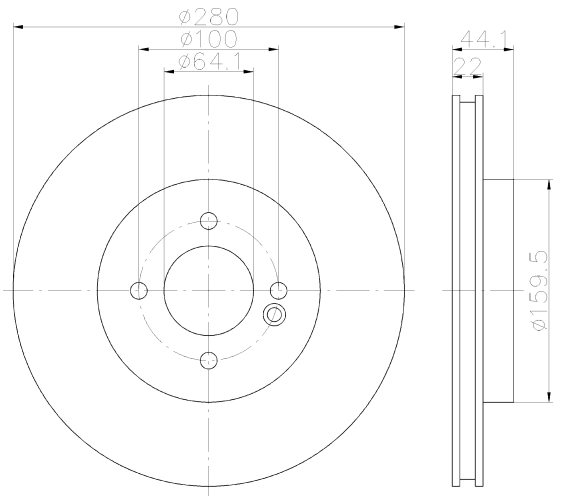

92158703

28.4 PRO

JAGUAR

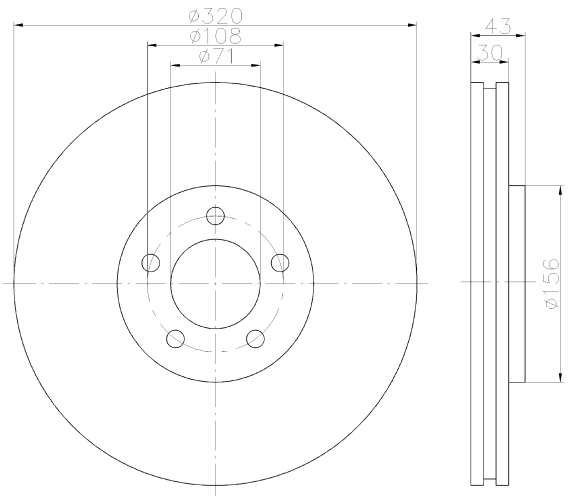

92158800

8.5

SUBARU

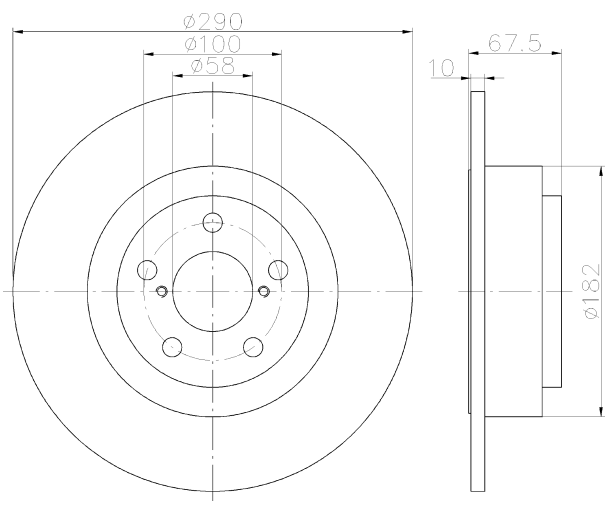

92158900

18

ROVER, TATA (TELCO)

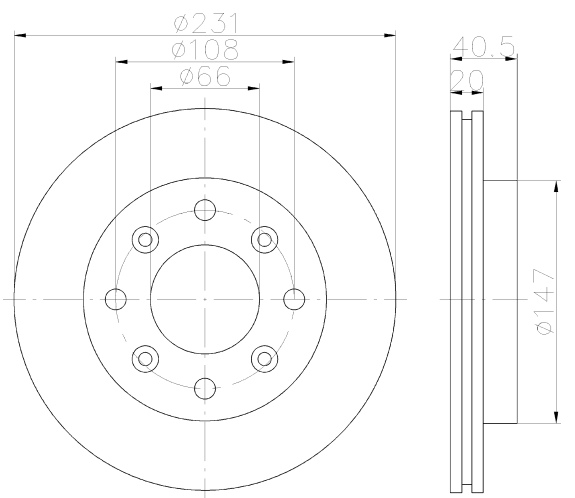

92159003

23 PRO

FORD, FORD AUSTRALIA

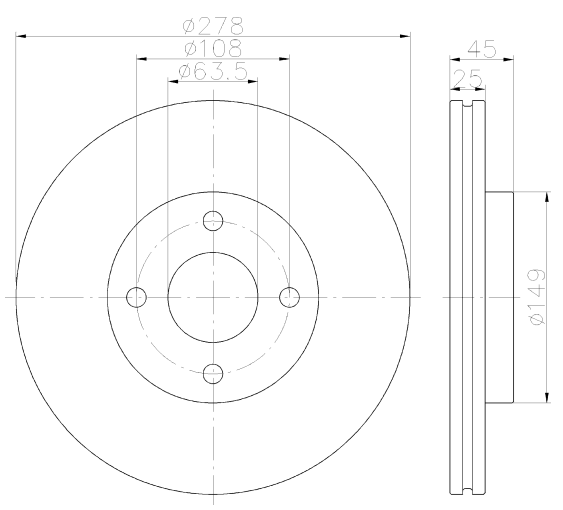

92159100

13 ABS

FORD, FORD AUSTRALIA

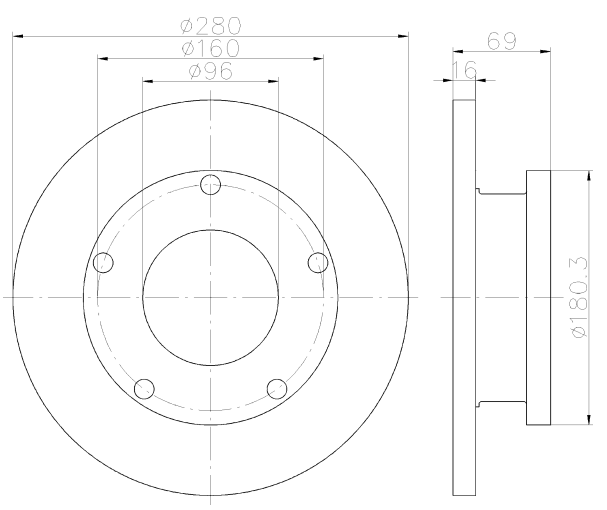

92159200

26

FORD, LAND ROVER, VOLVO, VOLVO (CHANGAN)

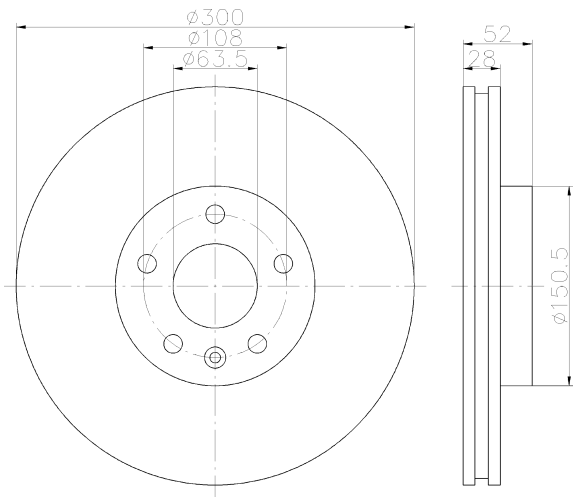

92159203

PRO

26

FORD, LAND ROVER, VOLVO, VOLVO (CHANGAN)

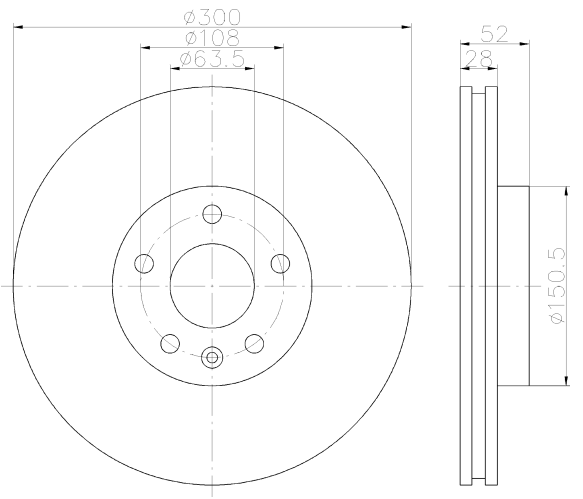

92159300

9

FORD, FORD (CHANGAN), FORD AUSTRALIA, LAND ROVER

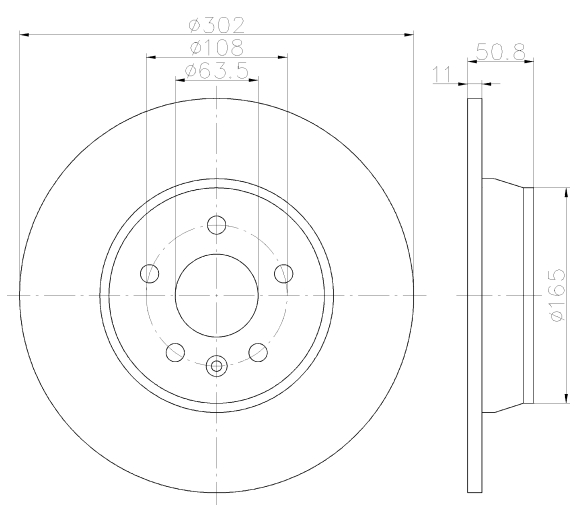

92159303

PRO

9

FORD, FORD (CHANGAN), FORD AUSTRALIA, LAND ROVER

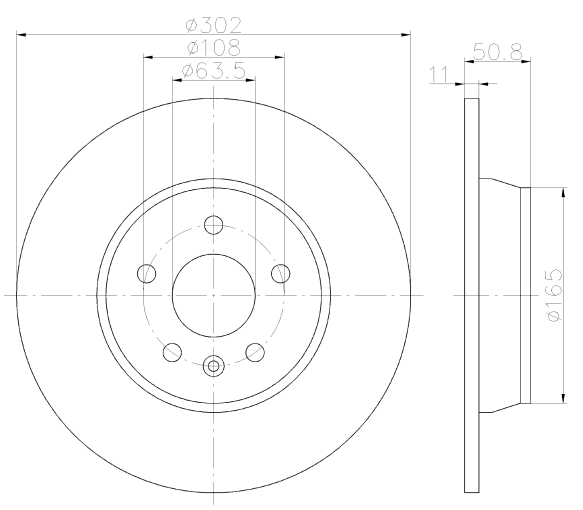

92159403

PRO

10

AUDI

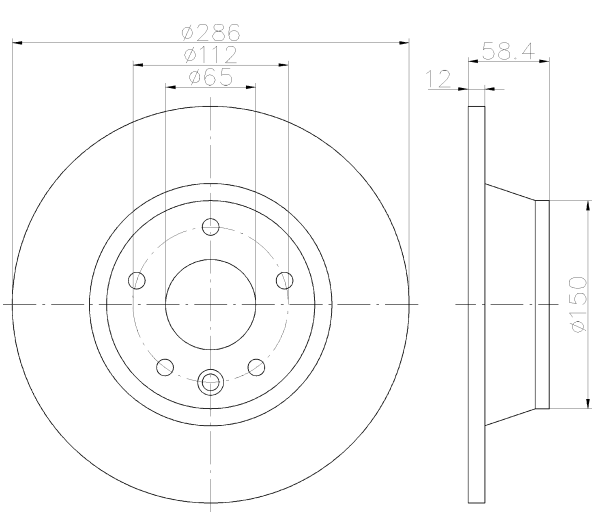

92159503

PRO

10

AUDI

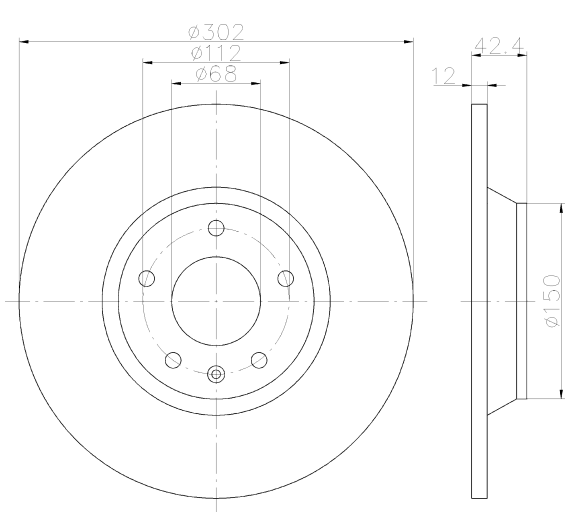

Illustrations

92159603

22.4 PRO

MERCEDES-BENZ

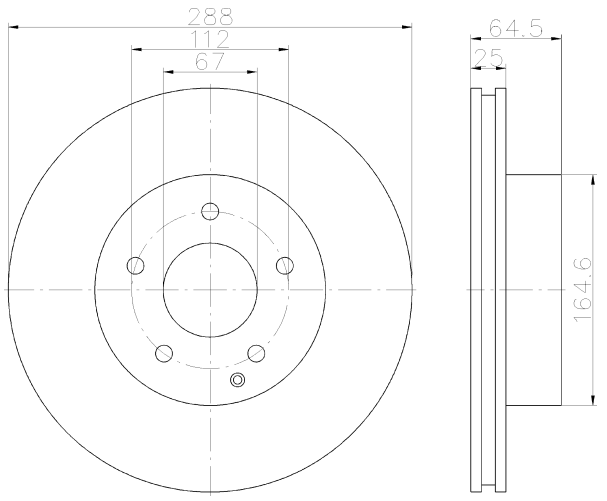

92159800

9.5 ABS

RENAULT

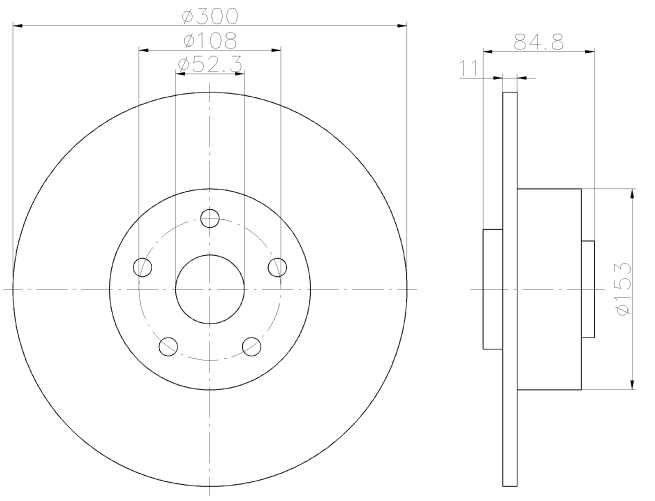

92159903

23 PRO

AUDI

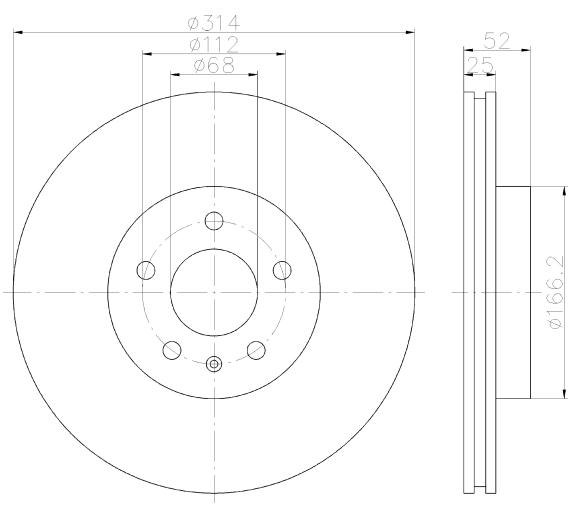

92160003

28 PRO

AUDI, AUDI (FAW)

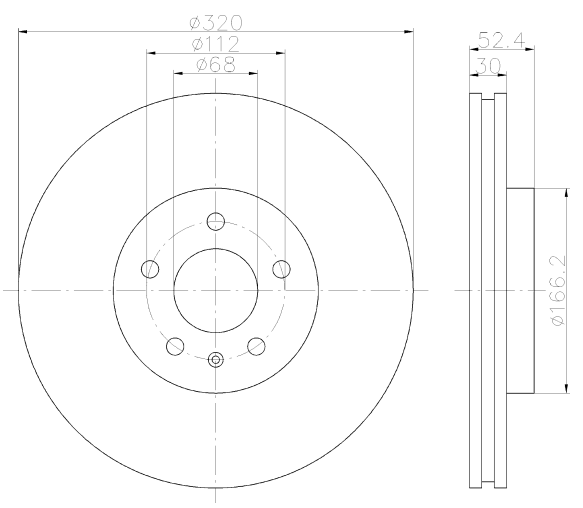

92160103

10 PRO

AUDI, AUDI (FAW)

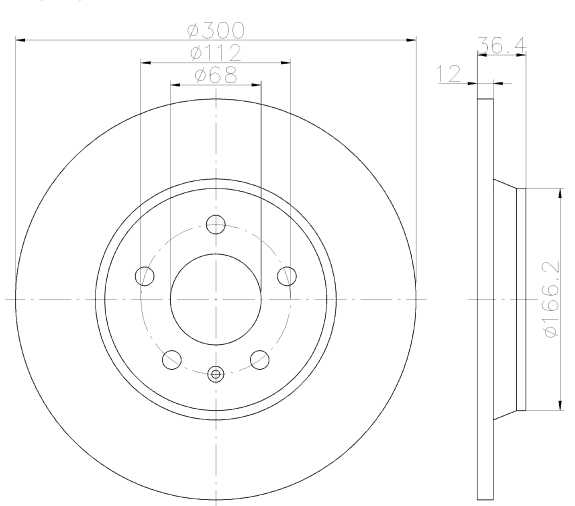

92160203

28 PRO

AUDI

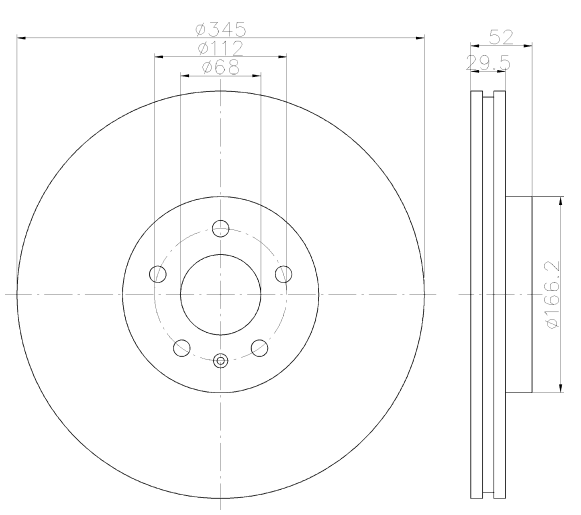

92160303

20 PRO

AUDI

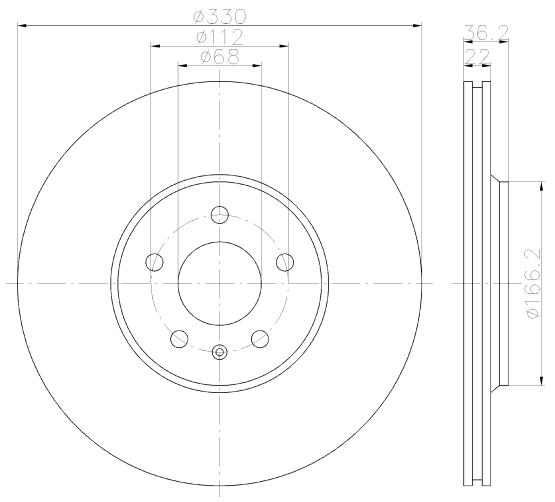

92160403

20 PRO

AUDI

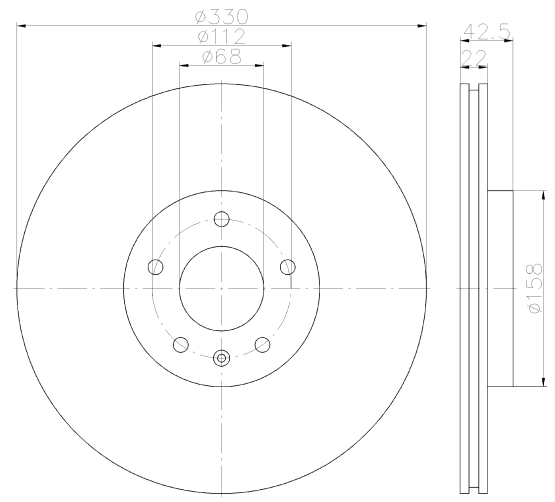

92160503

28 PRO

AUDI

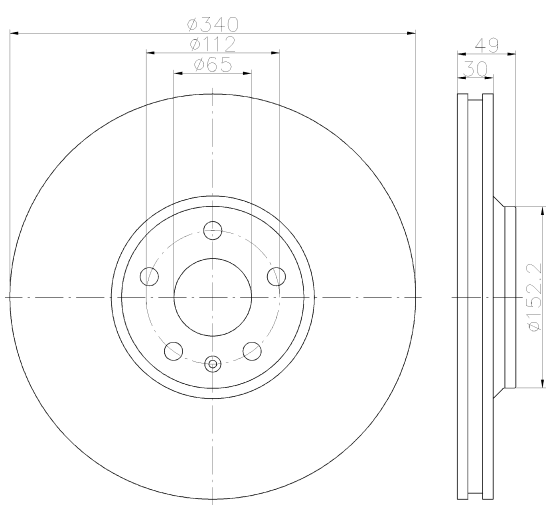

92160603

20 PRO

AUDI

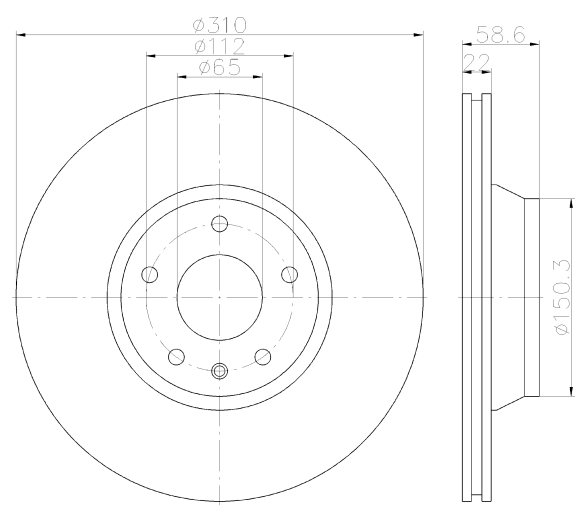

92160703

21.4 PRO

MERCEDES-BENZ

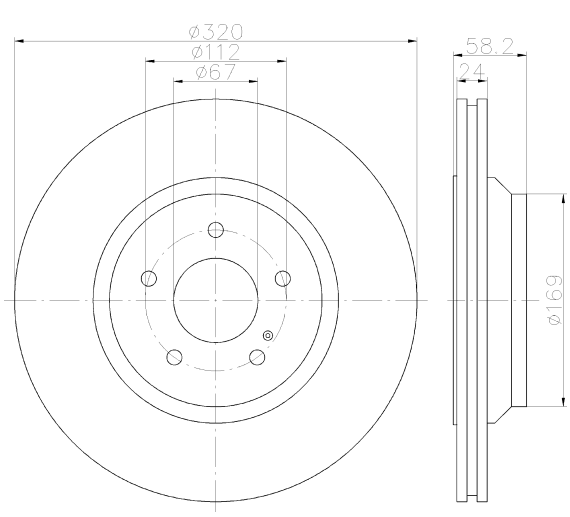

92160803

28.5 PRO

BMW

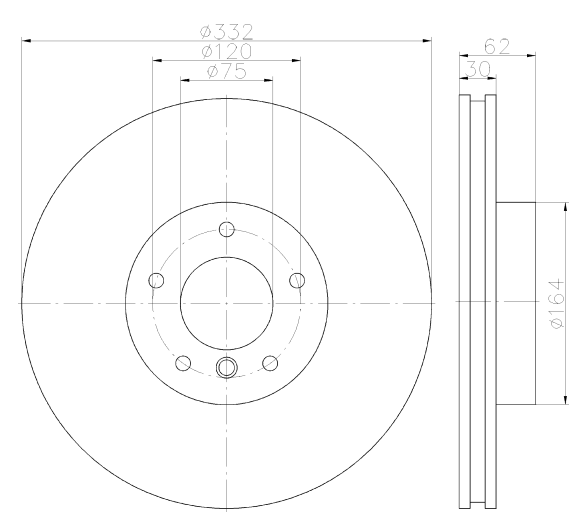

Illustrations

92160903

28.5 PRO

BMW

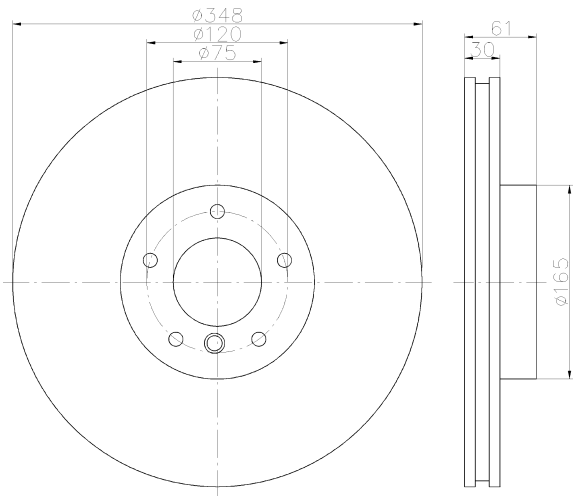

92161003

34.5 PRO

BMW

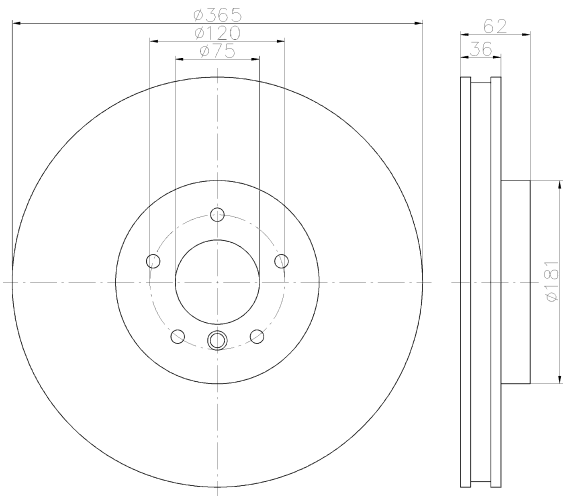

92161103

18.4 PRO

BMW

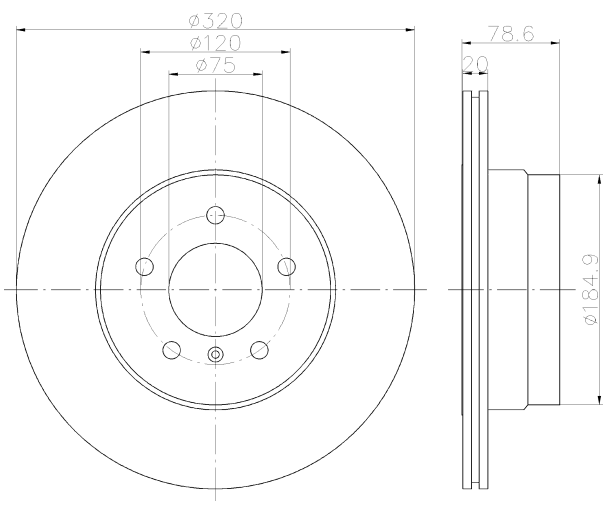

92161203

22.5 PRO

BMW

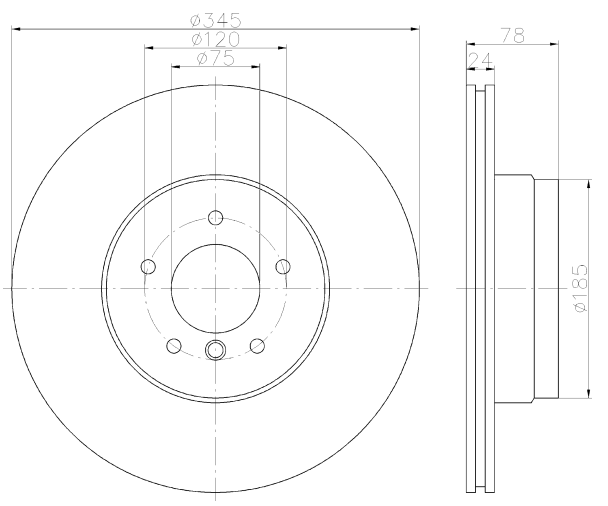

92161300

8.4

DODGE, HYUNDAI, KIA

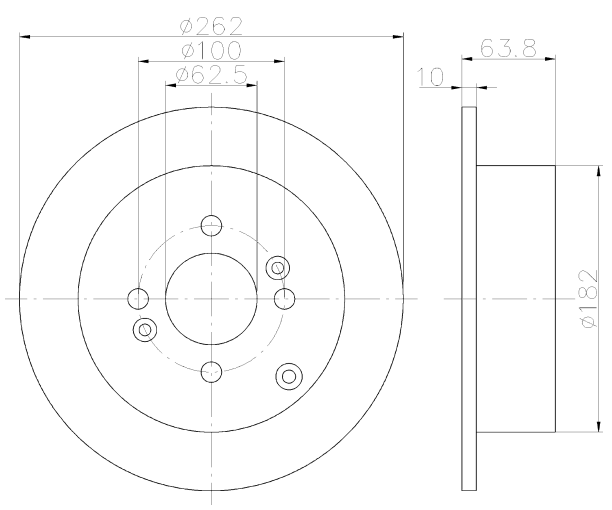

92161303

8.4 PRO

DODGE, HYUNDAI, KIA

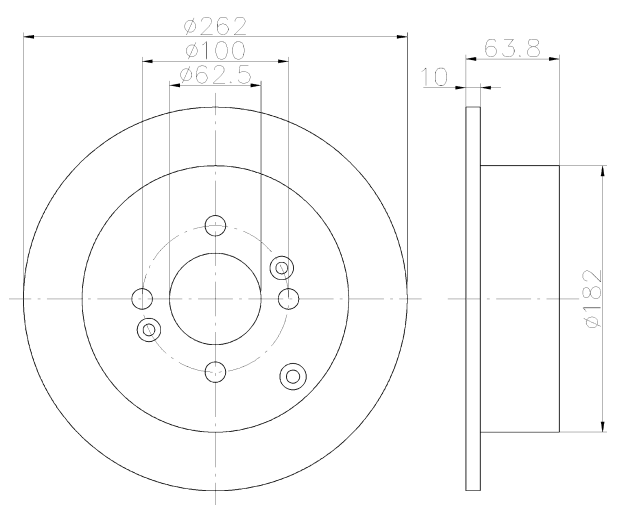

92161603

24.4 PRO

HYUNDAI, KIA, KIA (DYK)

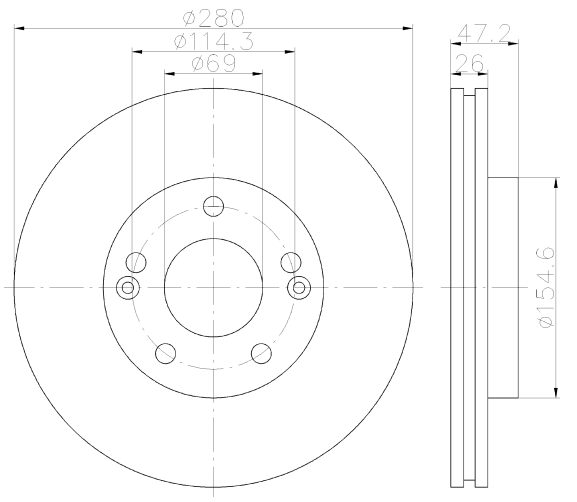

92161700

8.4

HYUNDAI, HYUNDAI (BEIJING), KIA

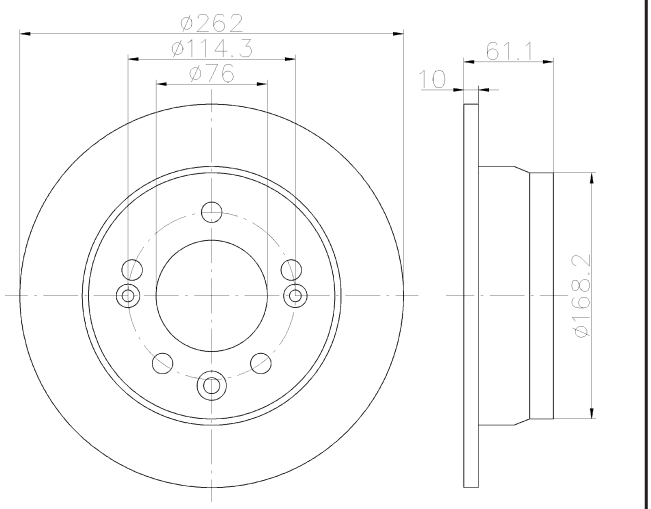

92161703

8.4 PRO

HYUNDAI, HYUNDAI (BEIJING), KIA

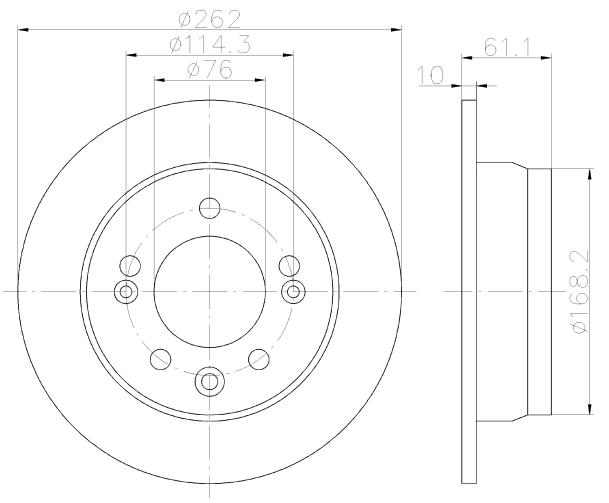

92161800

10.4

KIA

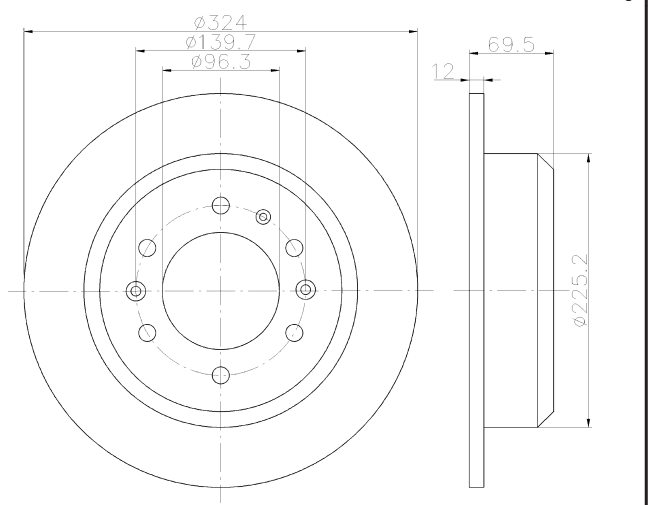

92161900

7

DAIHATSU, TOYOTA

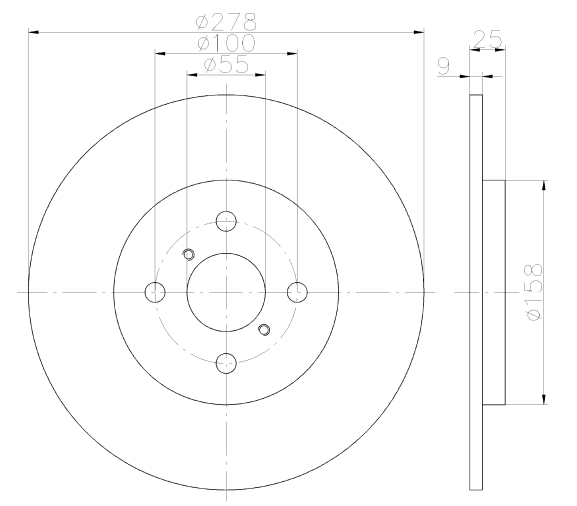

92162000

27

LAND ROVER

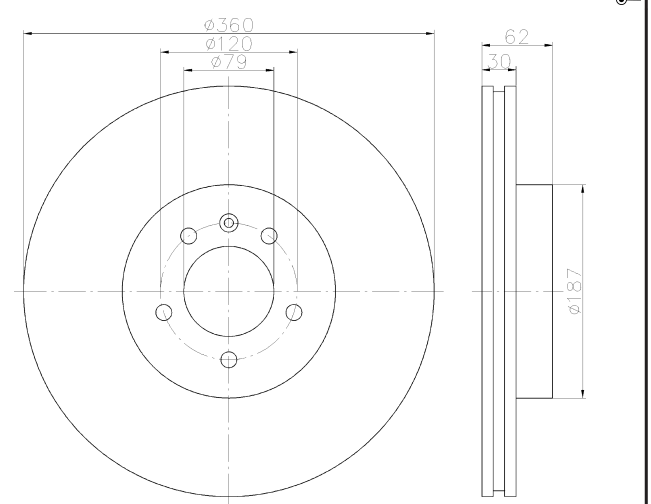

Illustrations

92162003

27 PRO

LAND ROVER

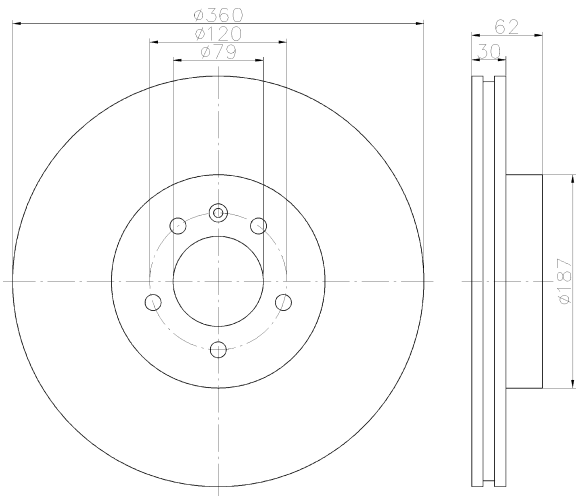

92162100

10.5

LEXUS, TOYOTA

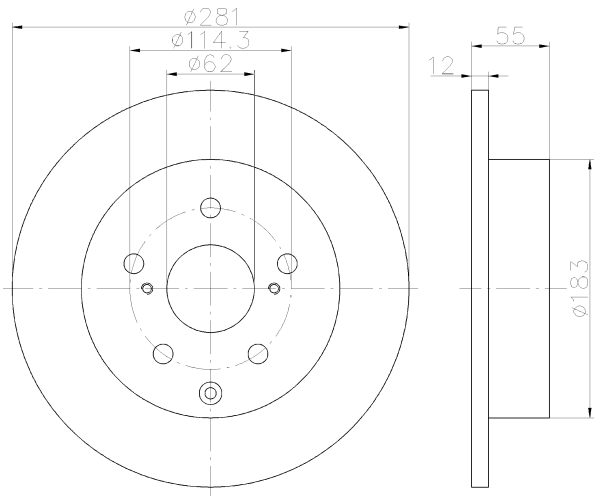

92162103

10.5 PRO

LEXUS, TOYOTA

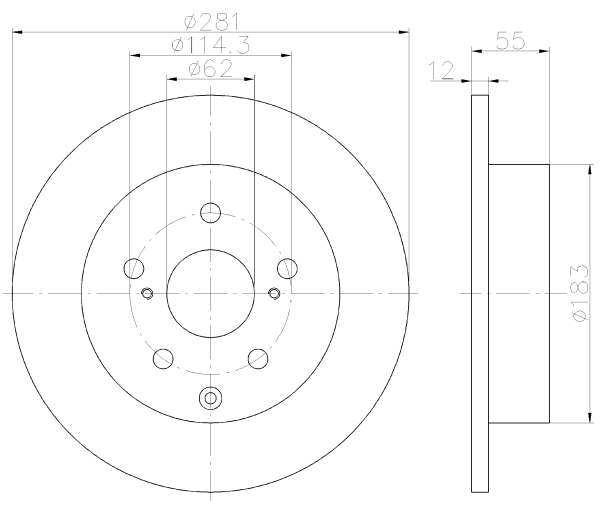

92162200

8

KIA

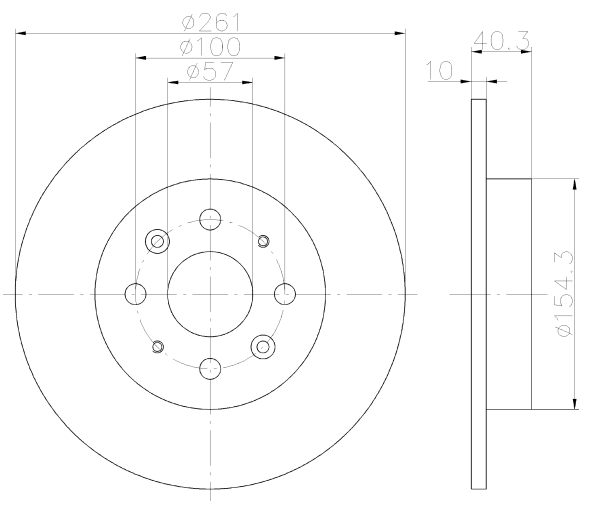

92162300

26

FORD, LAND ROVER, VOLVO, VOLVO (CHANGAN)

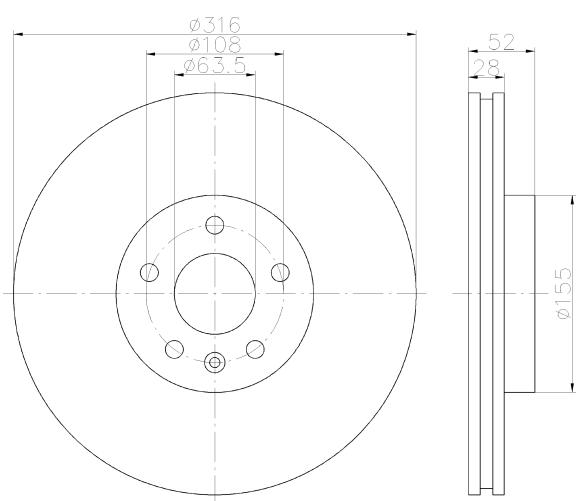

92162303

26 PRO

FORD, LAND ROVER, VOLVO, VOLVO (CHANGAN)

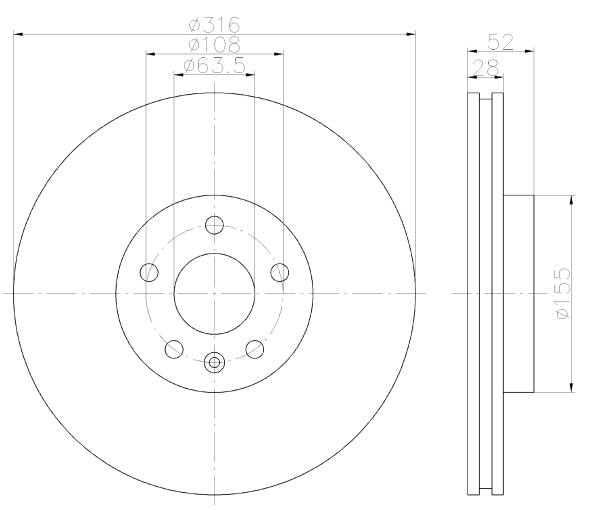

92162400

26

INFINITI, NISSAN

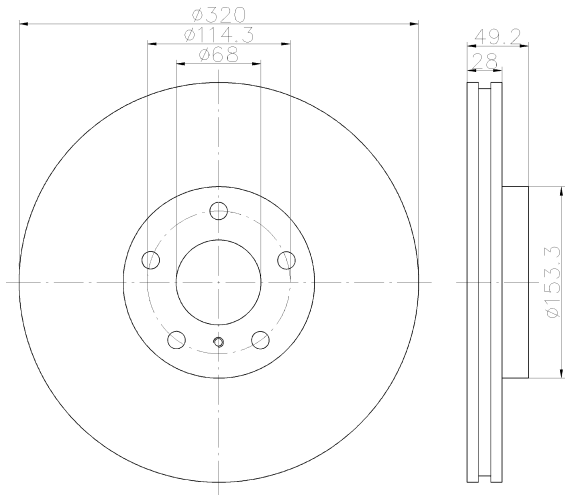

92162500

7.5

HONDA

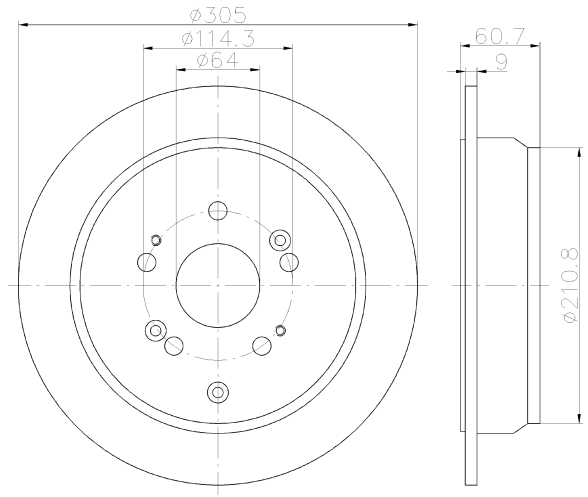

92162503

7.5 PRO

HONDA

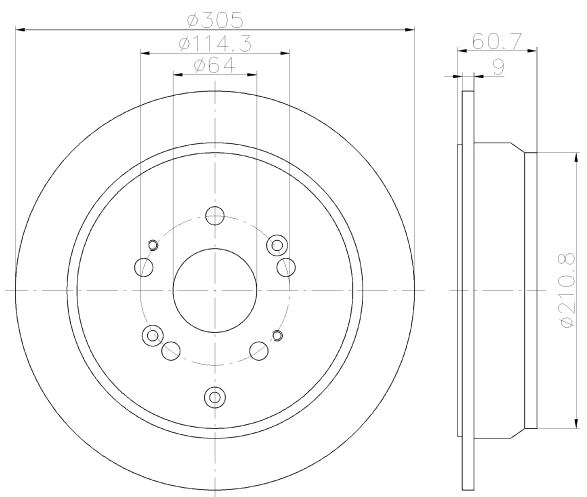

92162600

24

DAEWOO, SSANGYONG

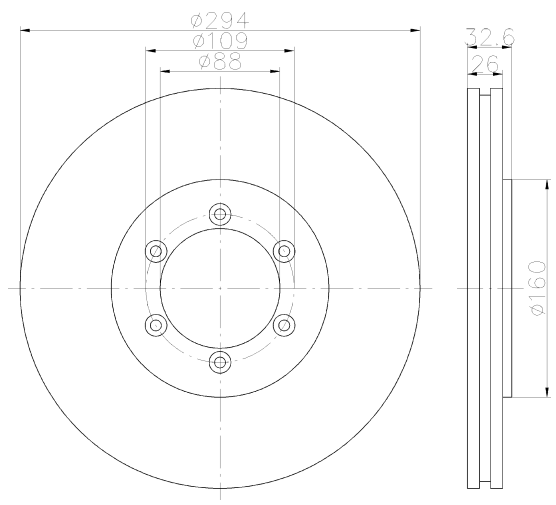

92162700

10

LAND ROVER

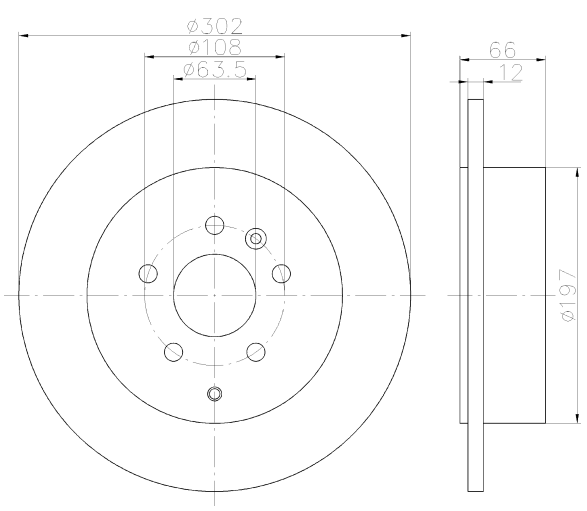

92162703

10 PRO

LAND ROVER

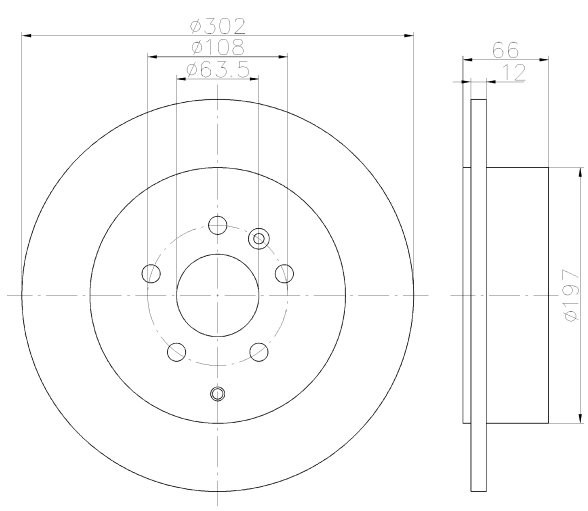

92162800

18

LAND ROVER

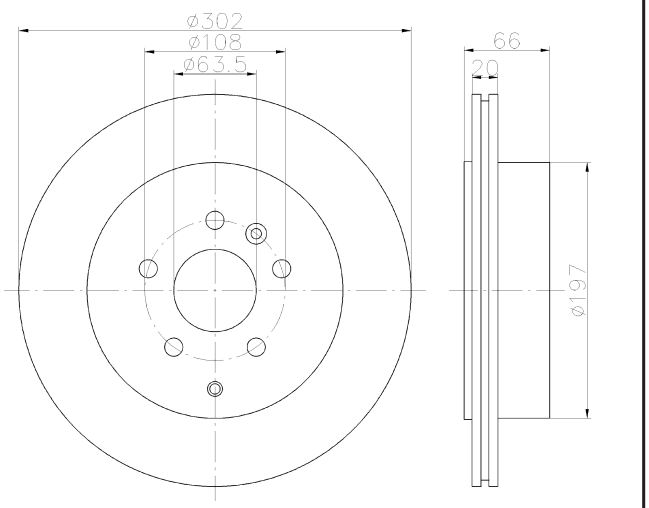

92162803

18 PRO

LAND ROVER

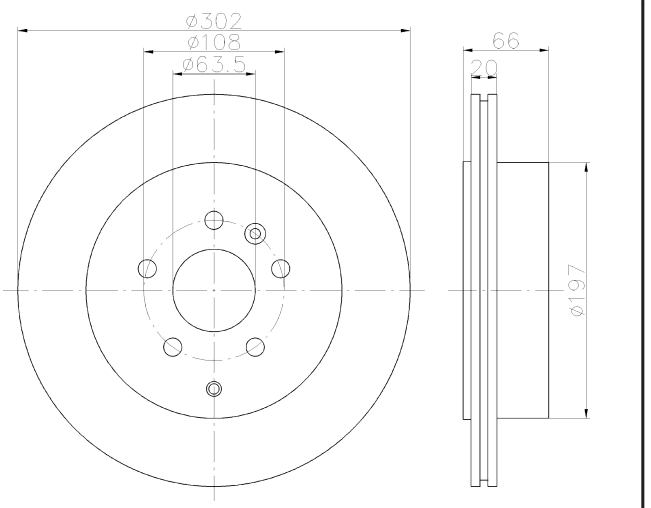

92162900

9

VOLVO, VOLVO (CHANGAN)

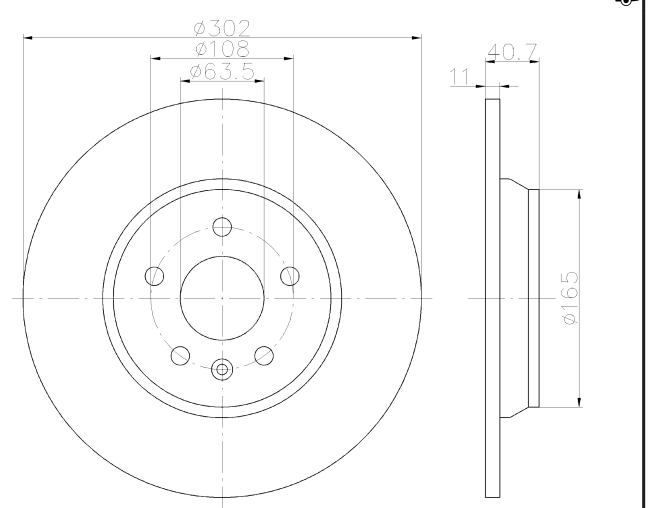

92162903

9 PRO

VOLVO, VOLVO (CHANGAN)

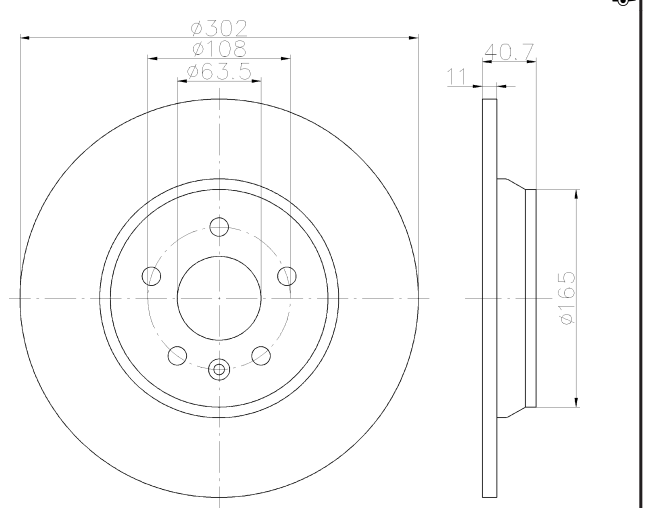

92163000

8

BUICK, CHEVROLET, DAEWOO, HOLDEN

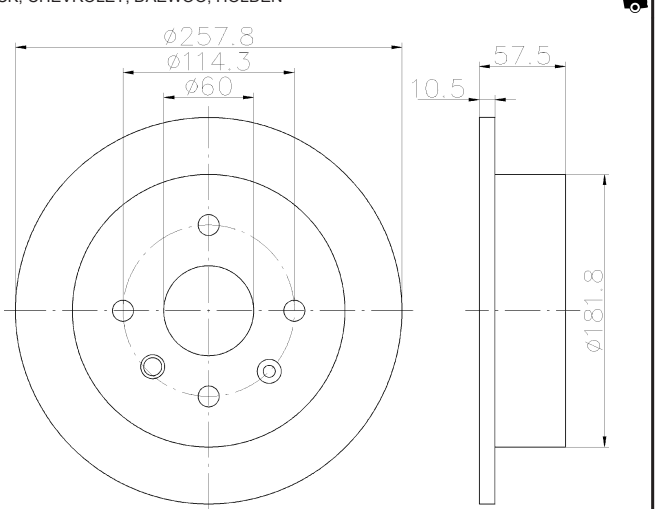

92163103

7.3 PRO

MERCEDES-BENZ

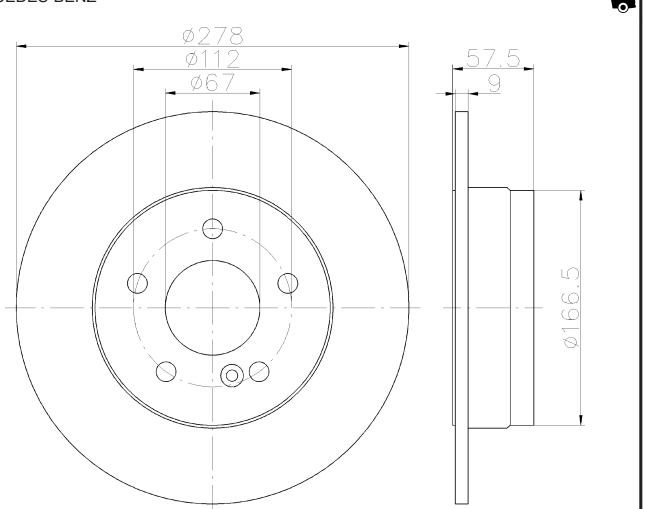

92163203

25.4 PRO

MERCEDES-BENZ, MERCEDES-BENZ (BBDC)

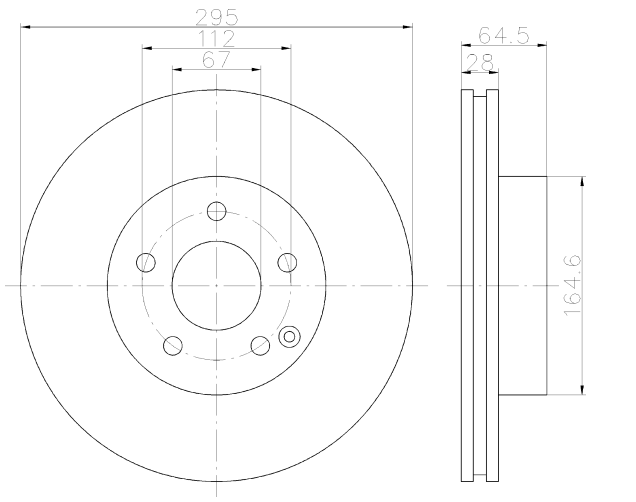

92163303

8.3 PRO

MERCEDES-BENZ, MERCEDES-BENZ (BBDC)

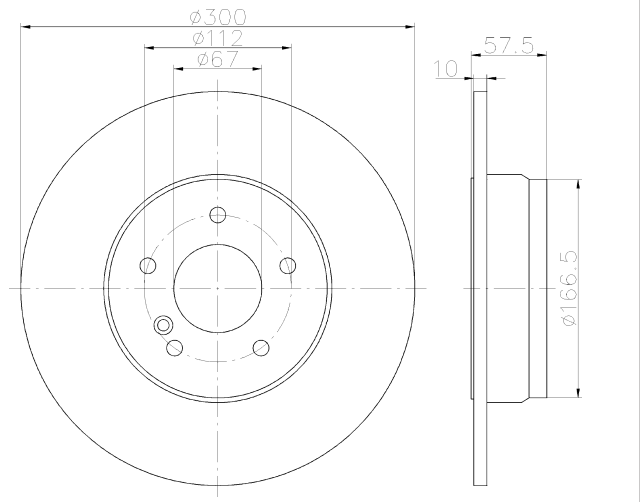

92163403

30 PRO

MERCEDES-BENZ, MERCEDES-BENZ (BBDC)

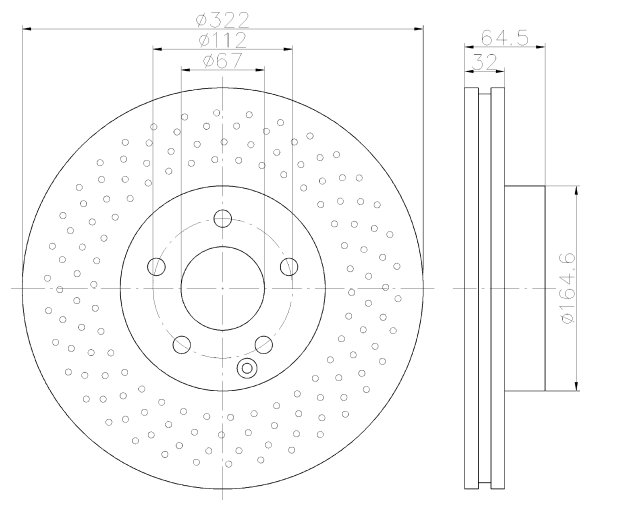

92163500

29.4

MERCEDES-BENZ, MERCEDES-BENZ (BBDC)

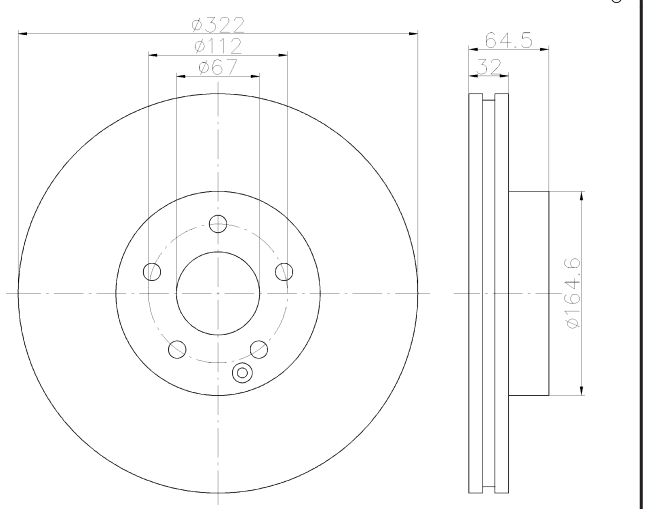

92163503

29.4 PRO

MERCEDES-BENZ, MERCEDES-BENZ (BBDC)

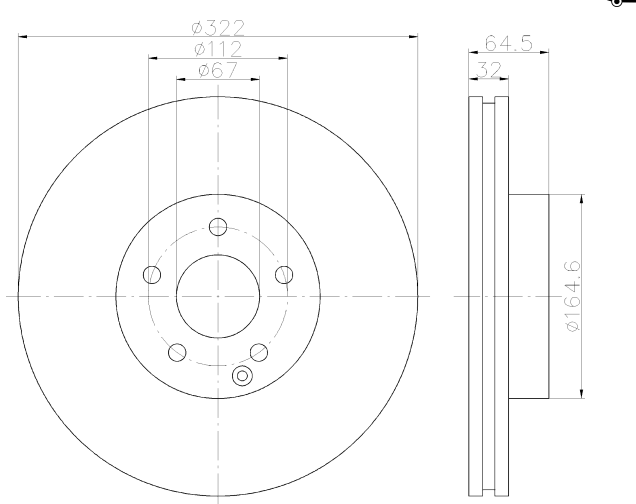

92163600

19.4

MERCEDES-BENZ

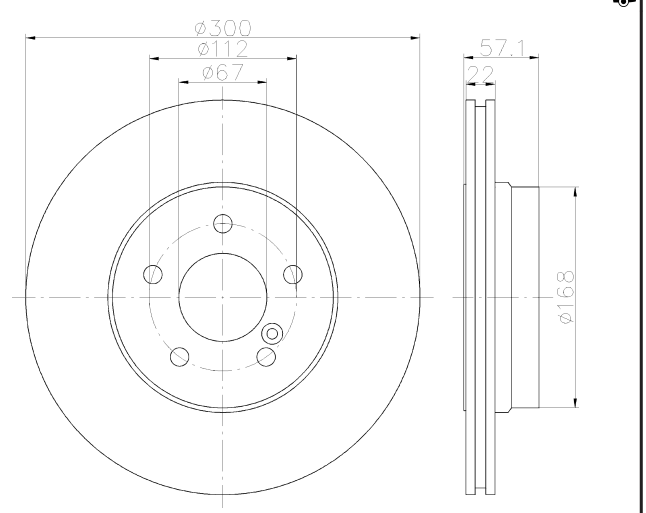

92163603

19.4 PRO

MERCEDES-BENZ

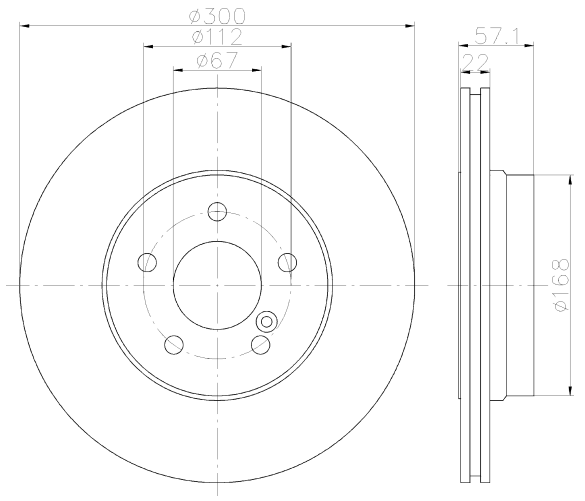

92163700

24

TOYOTA

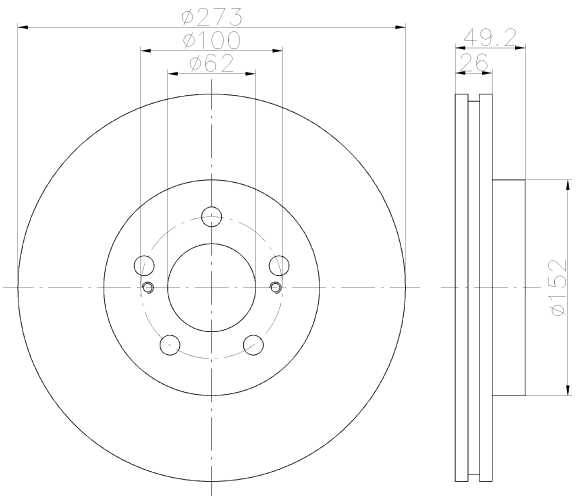

92163703

24 PRO

TOYOTA

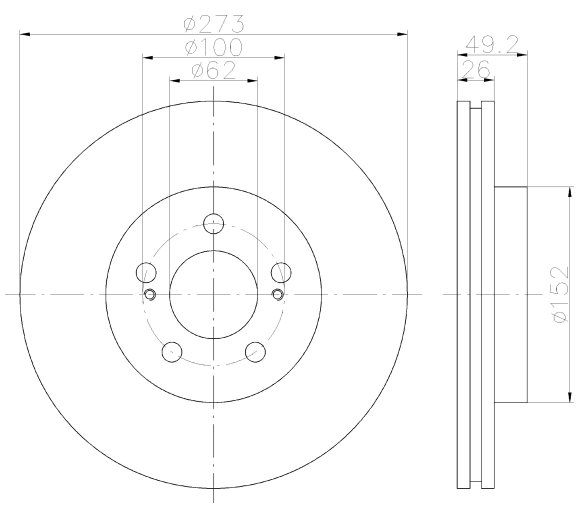

92163800

19

TOYOTA

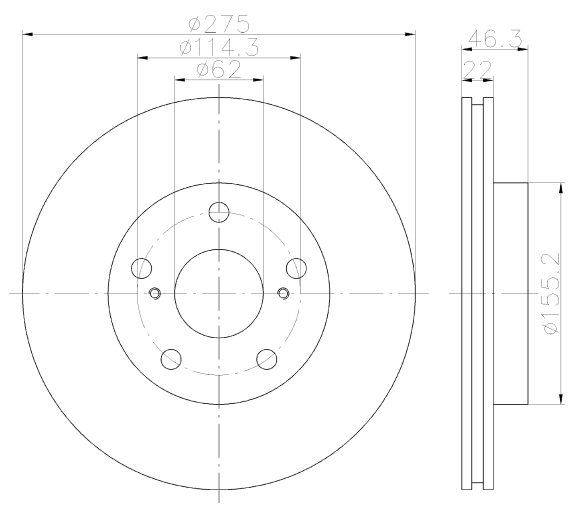

92163803

19 PRO

TOYOTA

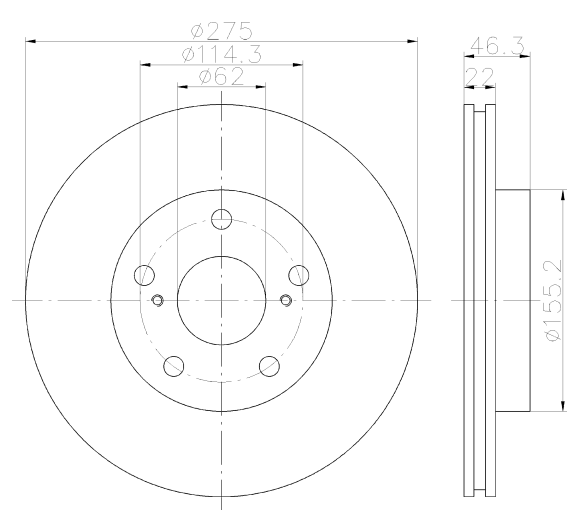

92163900

23

TOYOTA

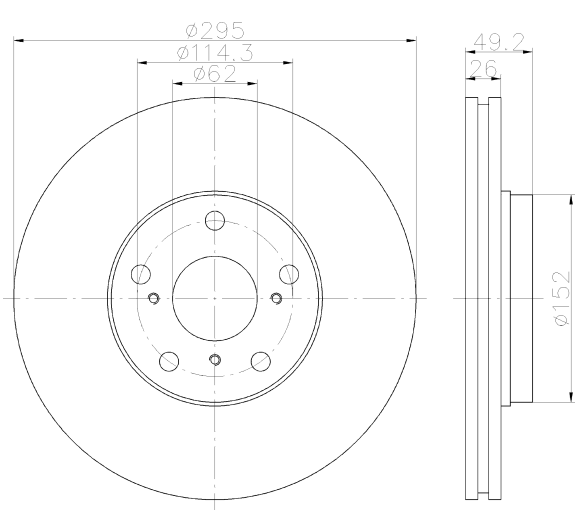

92163903

23 PRO

TOYOTA

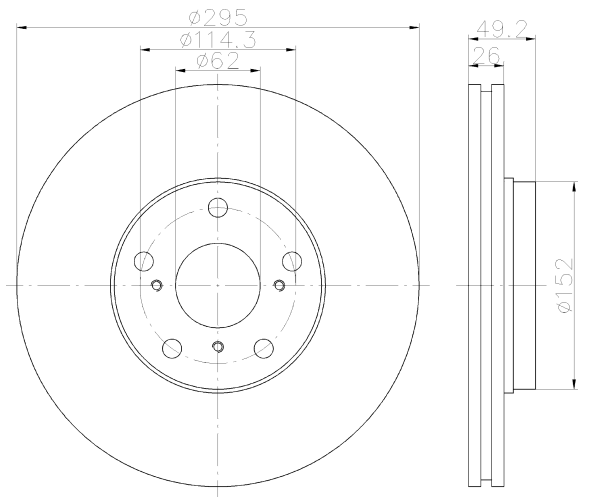

92164000

8

TOYOTA

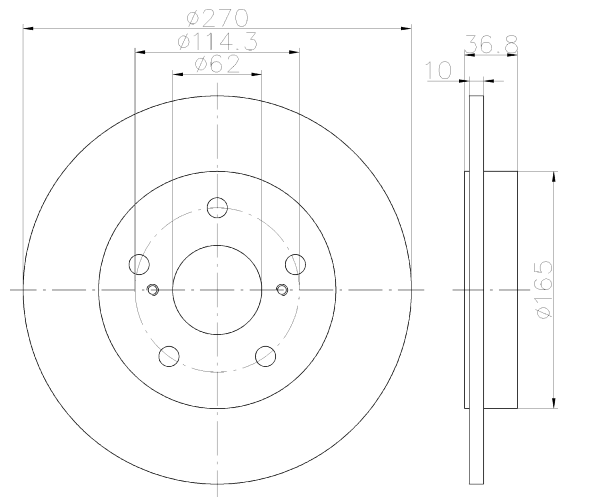

92164003

8 PRO

TOYOTA

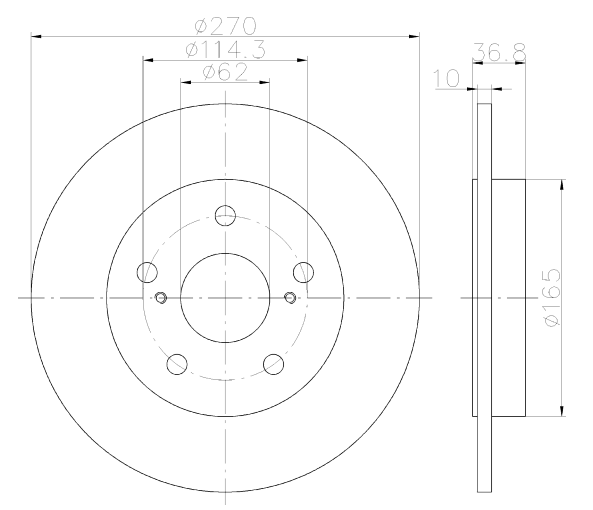

92164100

7.5

TOYOTA

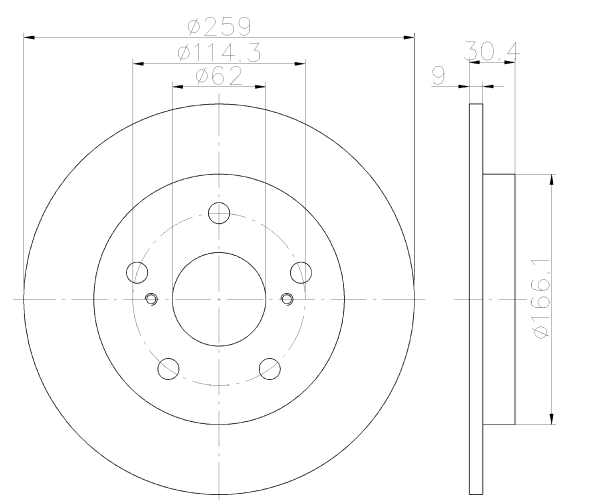

92164103

7.5 PRO

TOYOTA

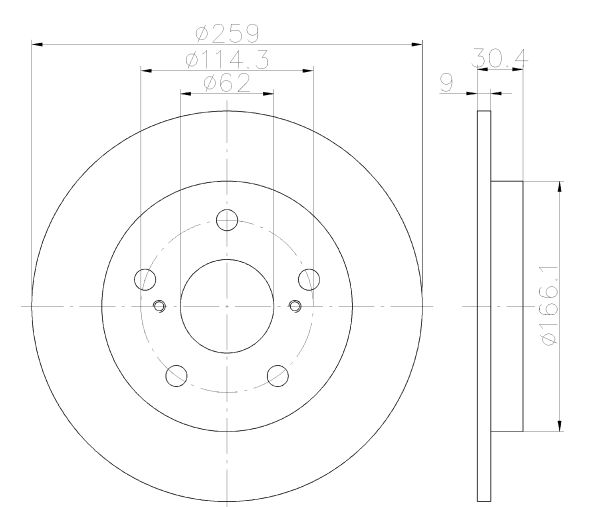

92164200

20

DAIHATSU, TOYOTA

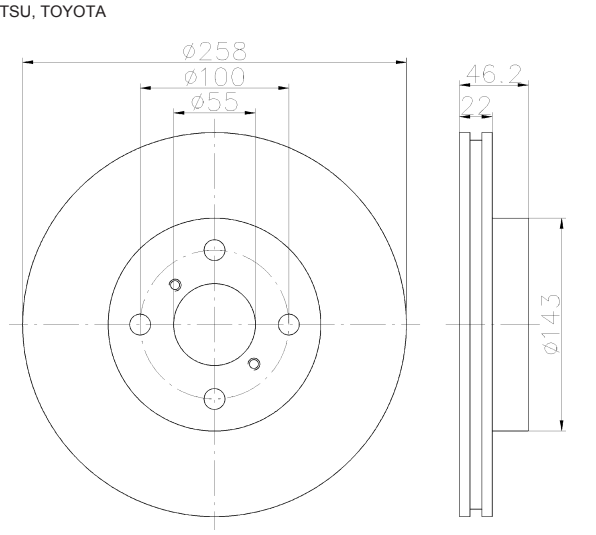

92164300

8

HONDA, HONDA (DONGFENG)

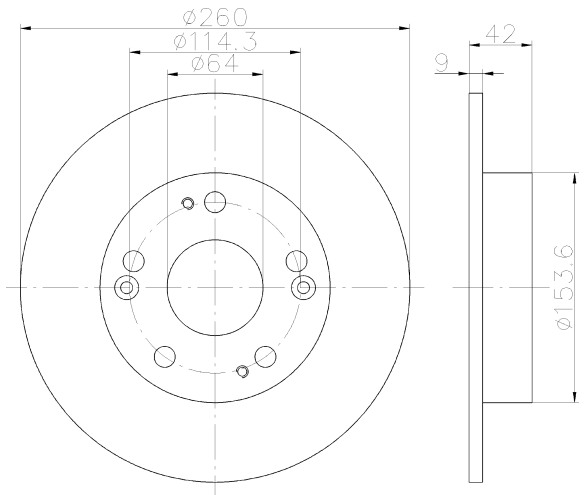

92164303

PRO

8

HONDA, HONDA (DONGFENG)

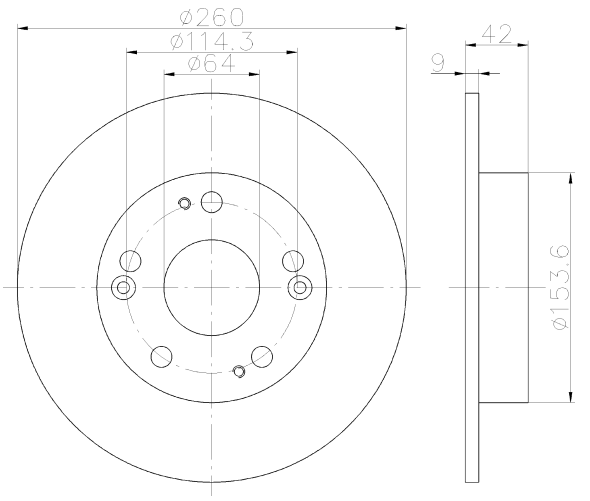

92164400

26

NISSAN

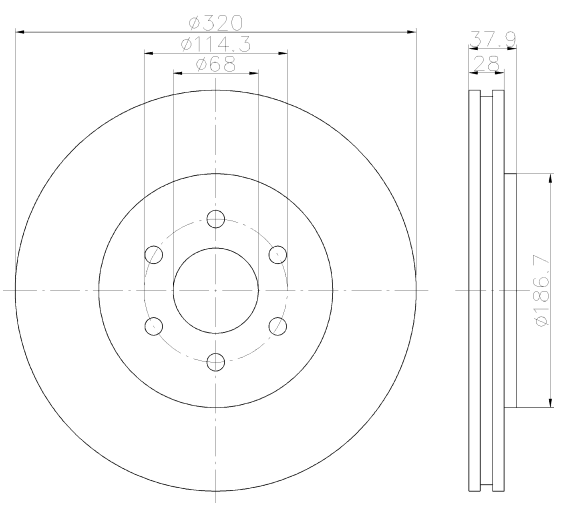

92164403

PRO

26

NISSAN

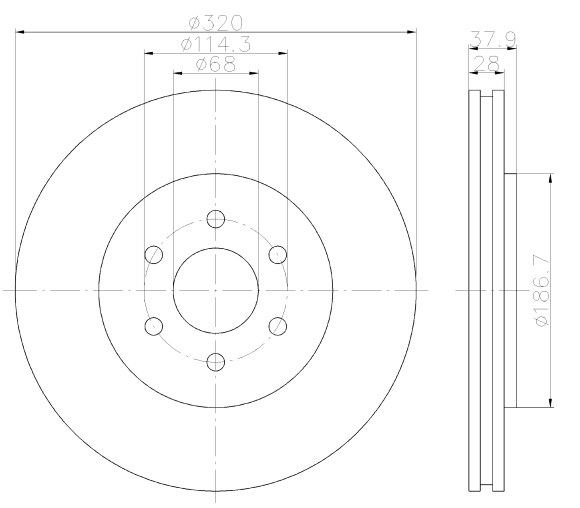

92164500

26

KIA

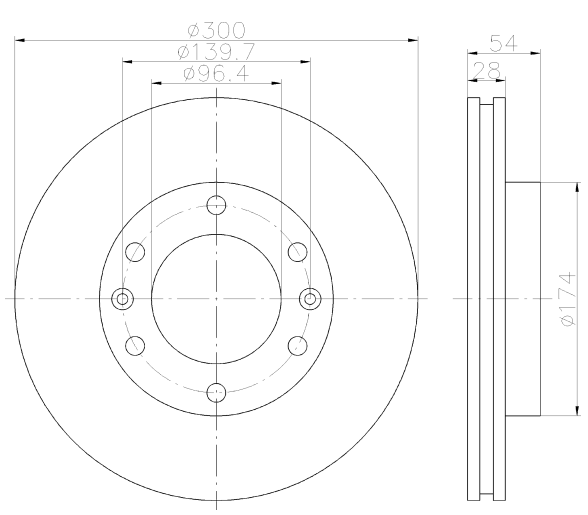

92164603

PRO

10

FIAT, OPEL, VAUXHALL

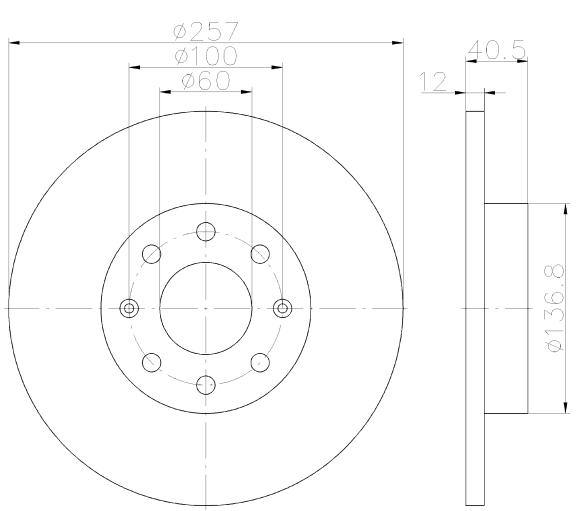

92164700

20

DODGE, HYUNDAI, KIA

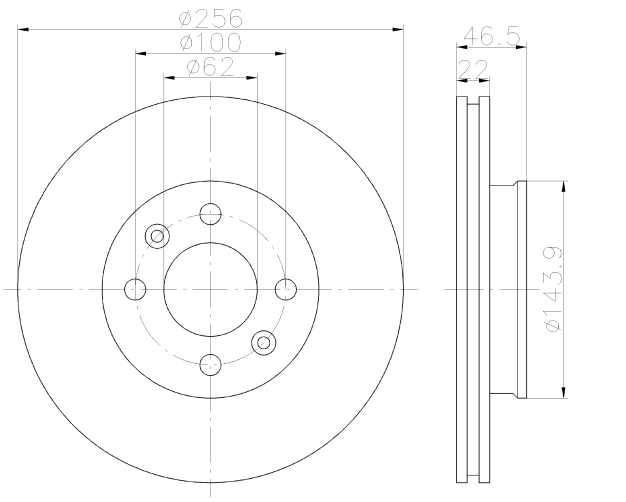

92164703

PRO

20

DODGE, HYUNDAI, KIA

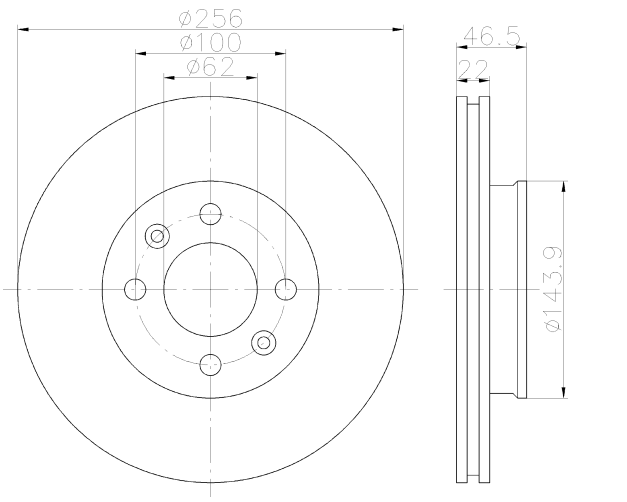

92164800

8.5

TOYOTA

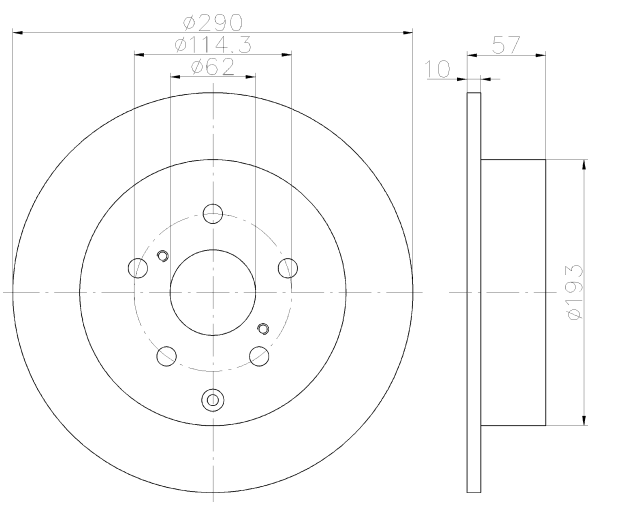

92164803

PRO

8.5

TOYOTA

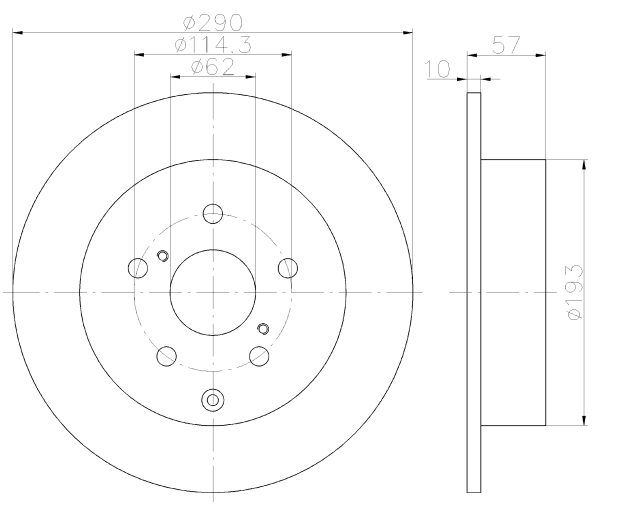

92164900

18

SAAB

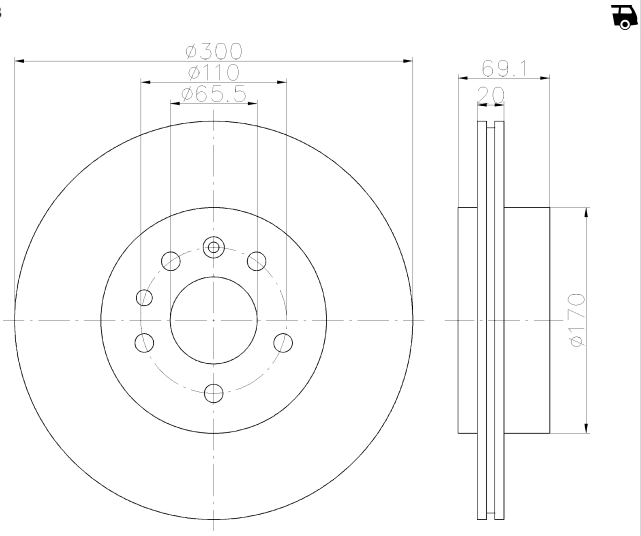

92165003

PRO

26

MERCEDES-BENZ

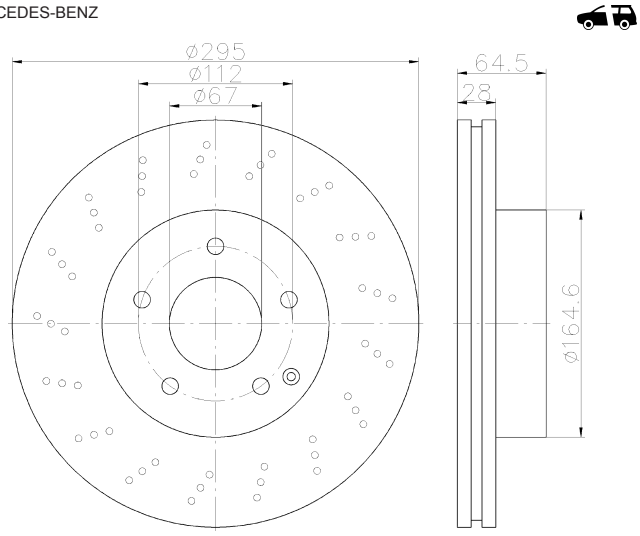

Illustrations

92165303

18 PRO

PORSCHE

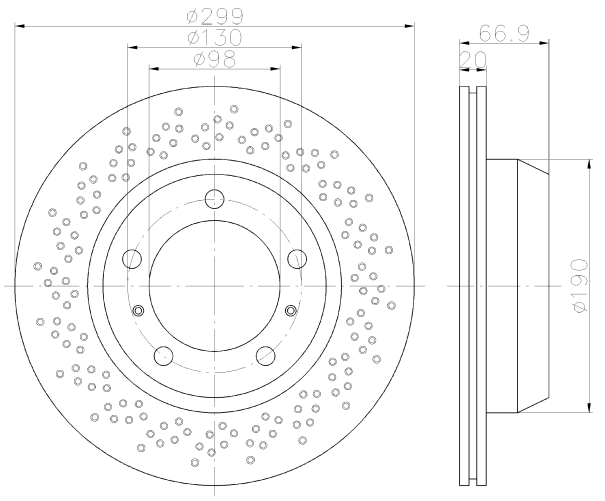

92165400

27.4

CHEVROLET, CHEVROLET (SGM), HOLDEN, OPEL, PONTIAC, VAUXHALL

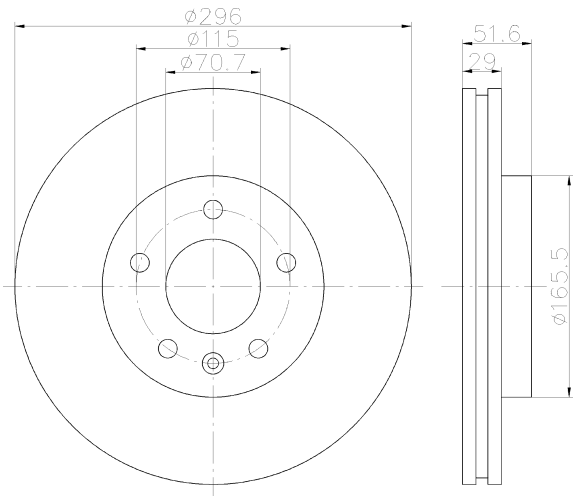

92165500

18.4

CHEVROLET, CHEVROLET (SGM), HOLDEN, OPEL, PONTIAC, VAUXHALL

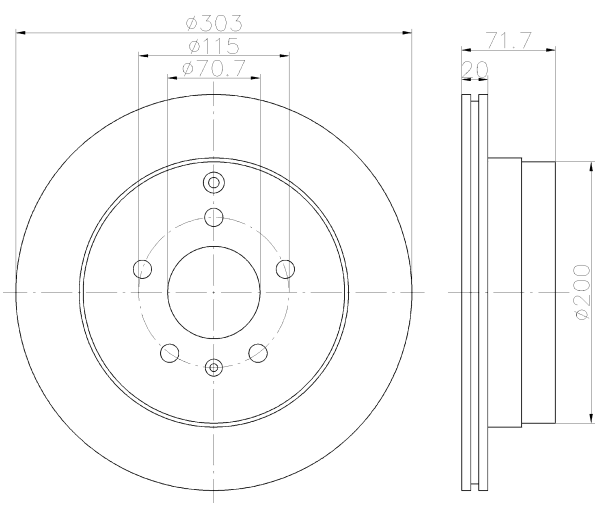

92165600

16

DAIHATSU, PERODUA, SUBARU

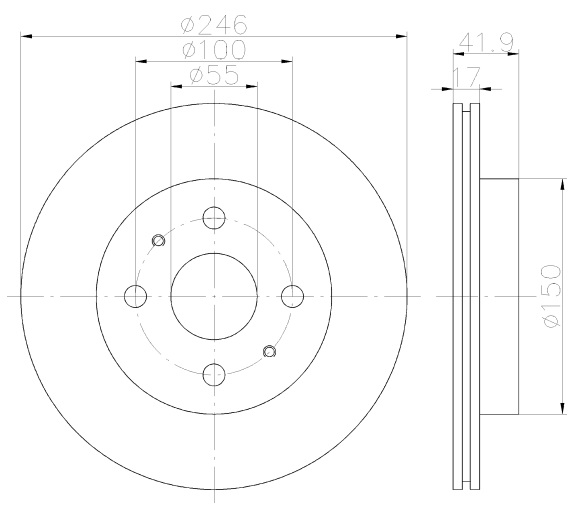

92165700

7.5

HONDA

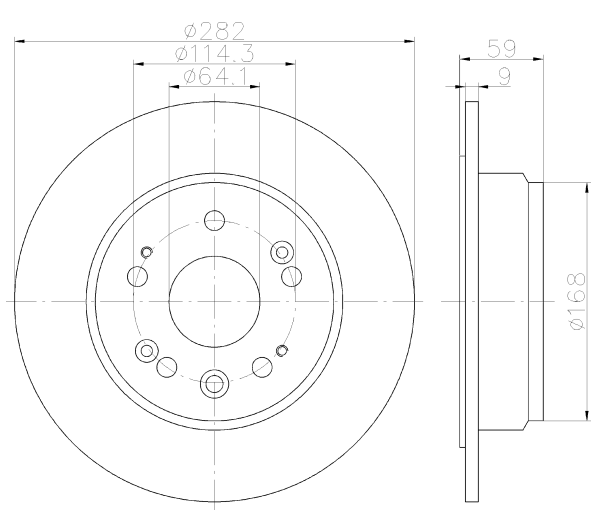

92165703

7.5 PRO

HONDA

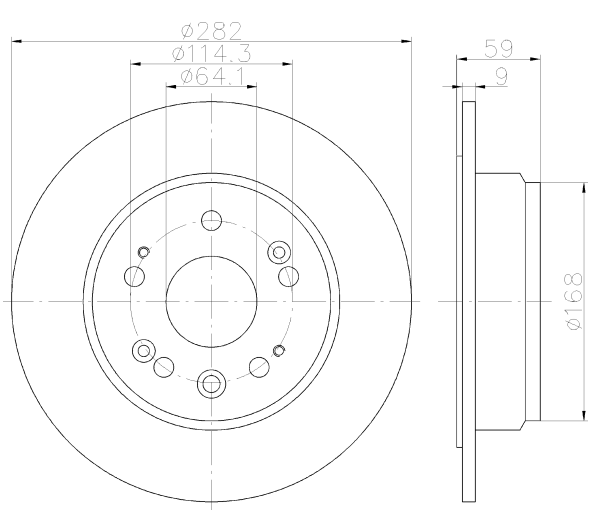

92165800

7.5

HONDA

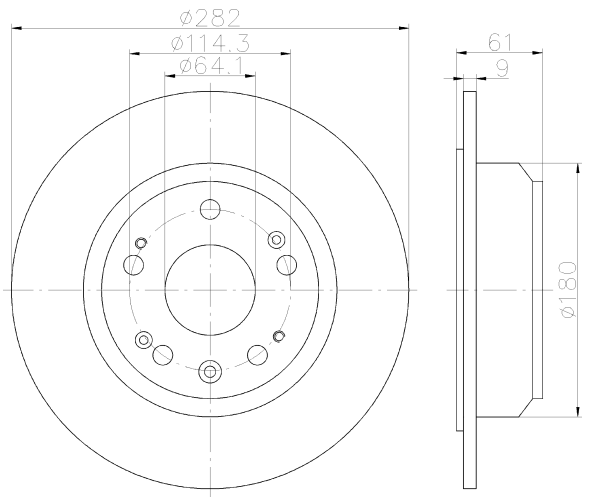

92165803

7.5 PRO

HONDA

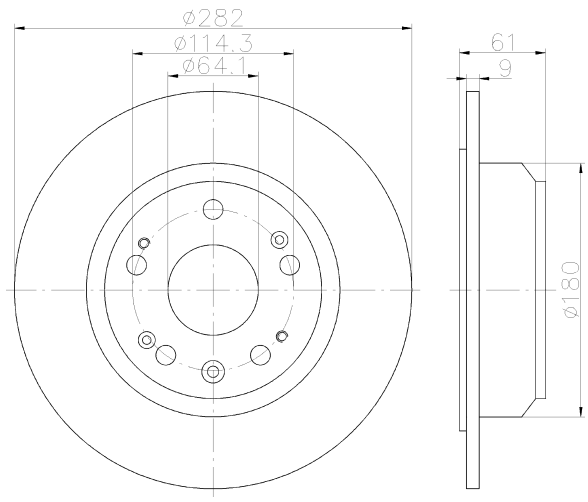

92165900

19

HONDA

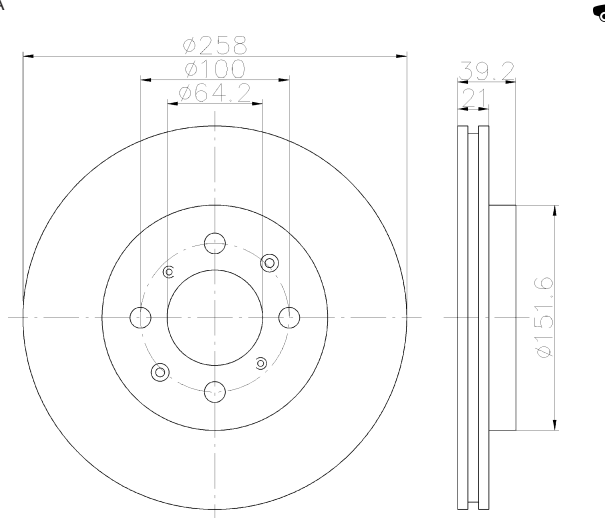

92166003

26.4 PRO

HYUNDAI

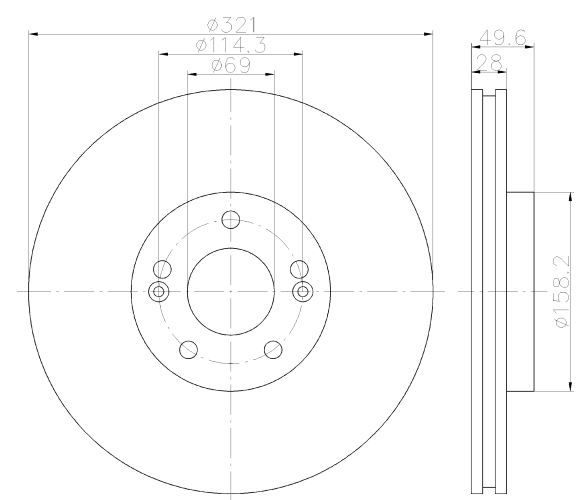

92166100

9.4

HYUNDAI

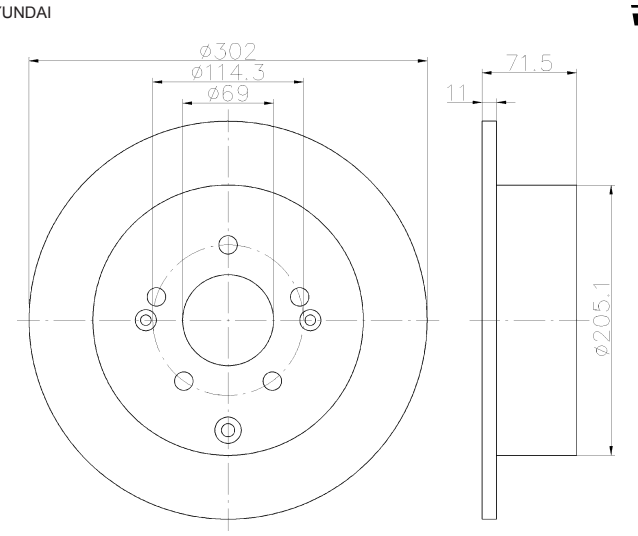

92166103

9.4 PRO

HYUNDAI

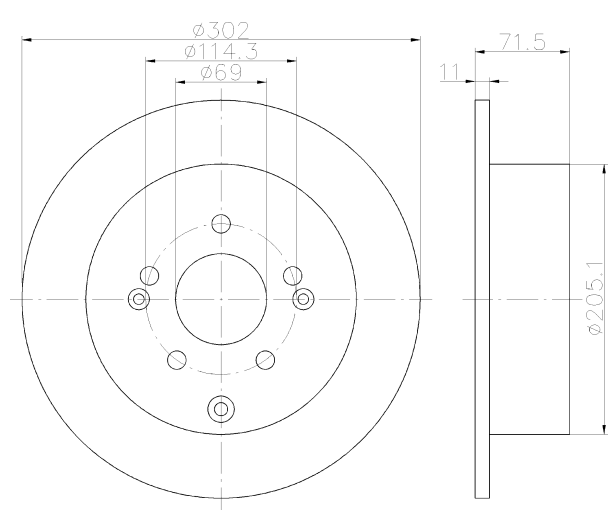

92166200

26.4

HYUNDAI, HYUNDAI (BEIJING), KIA

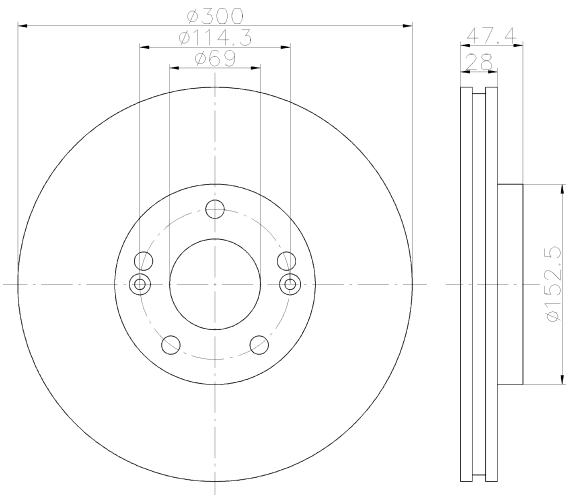

92166300

23

MAZDA

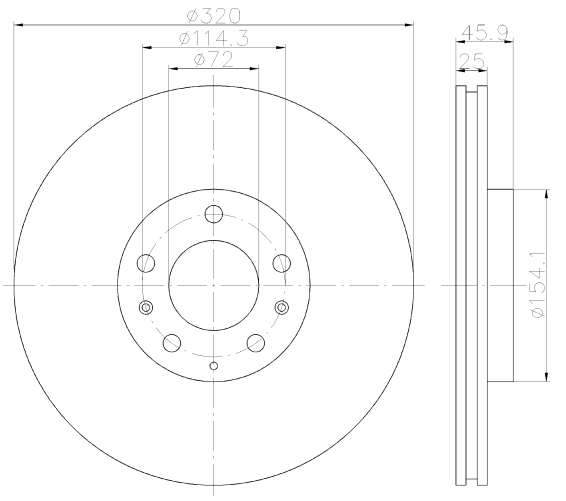

92166400

9

MAZDA

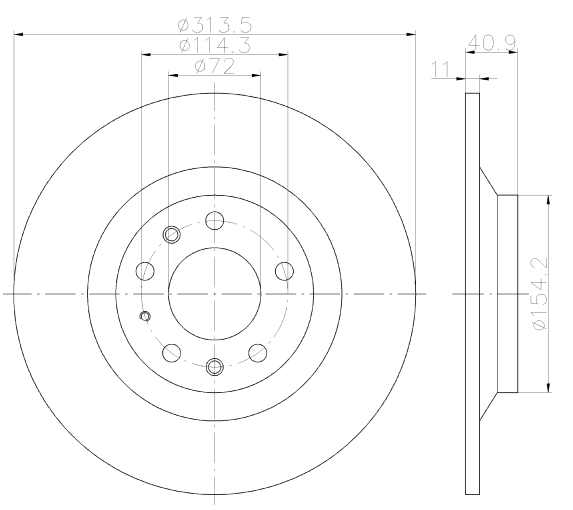

92166500

26.4

HYUNDAI, HYUNDAI (BEIJING), KIA

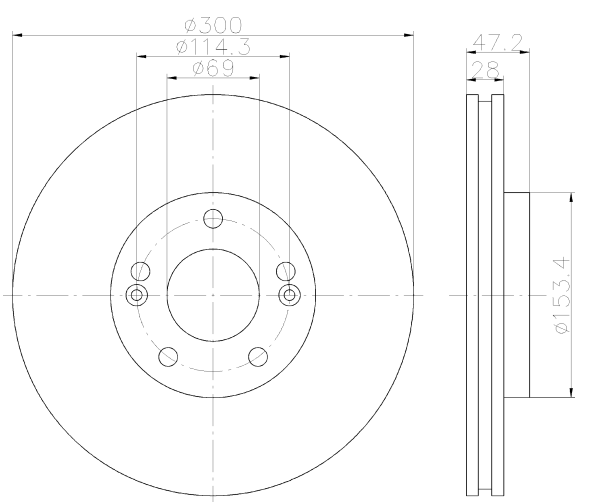

92166600

8.4

HYUNDAI

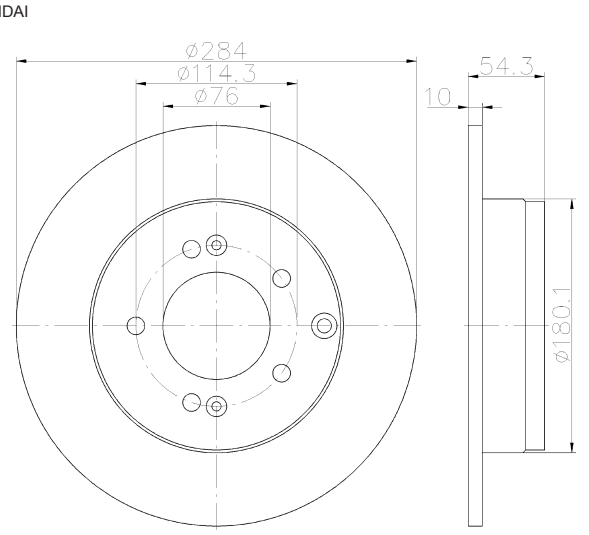

92166700

8

HYUNDAI

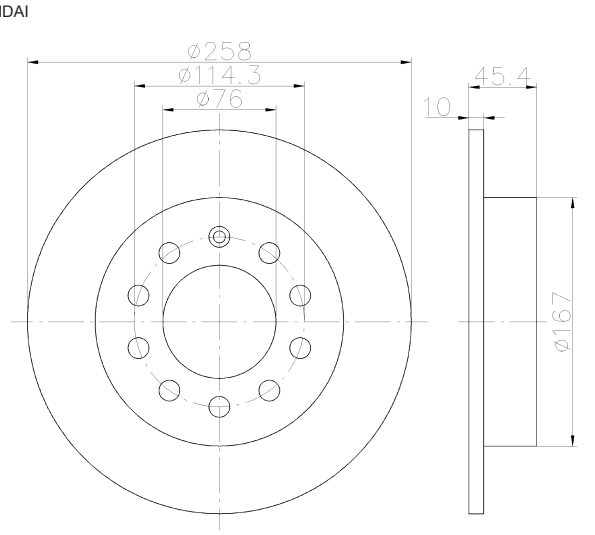

92166800

21

MAZDA

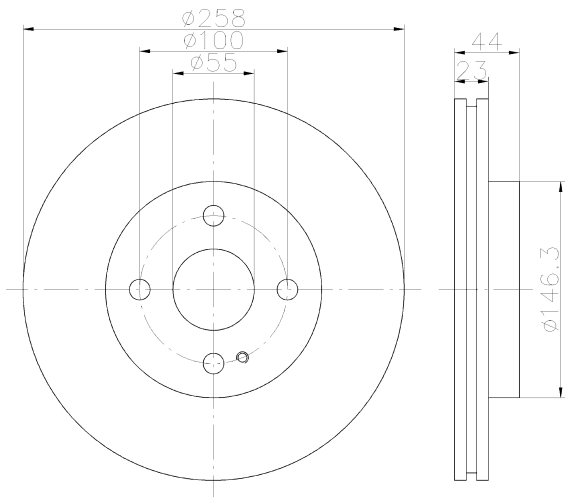

92166900

22.4

MITSUBISHI

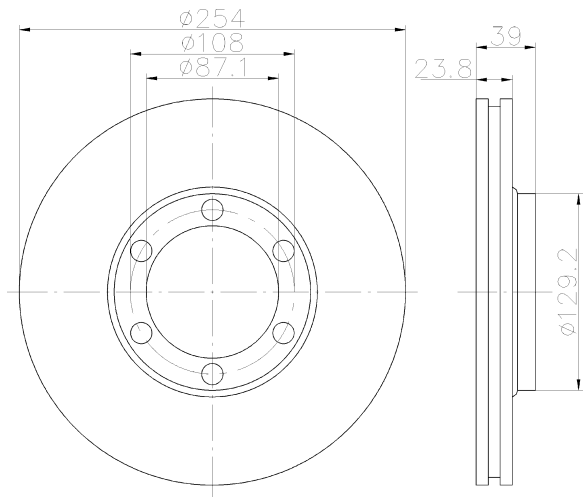

92166903

22.4 PRO

MITSUBISHI

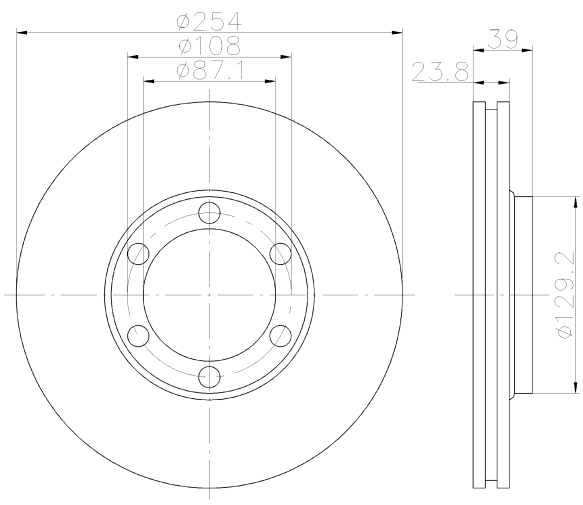

92167000

8.4

CITROËN, MITSUBISHI, PEUGEOT

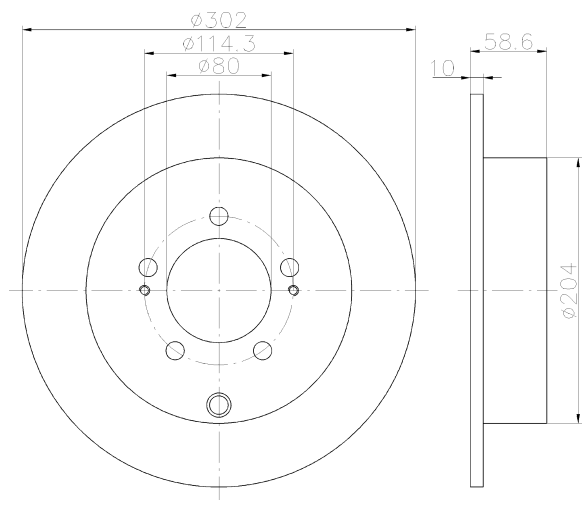

92167003

8.4 PRO

CITROËN, MITSUBISHI, PEUGEOT

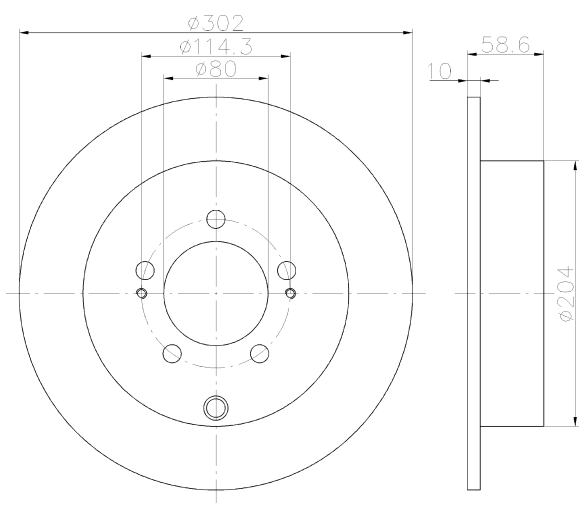

92167100

24.4

MITSUBISHI

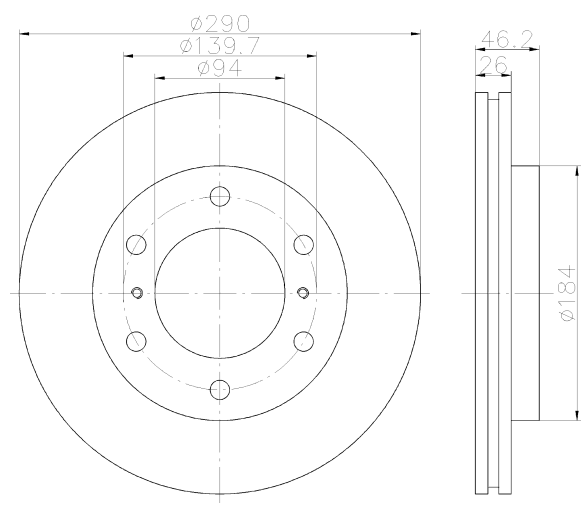

92167103

24.4 PRO

MITSUBISHI

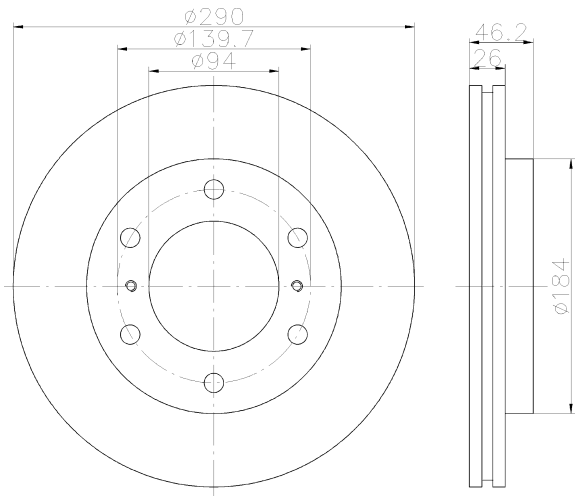

92167200

26

MITSUBISHI

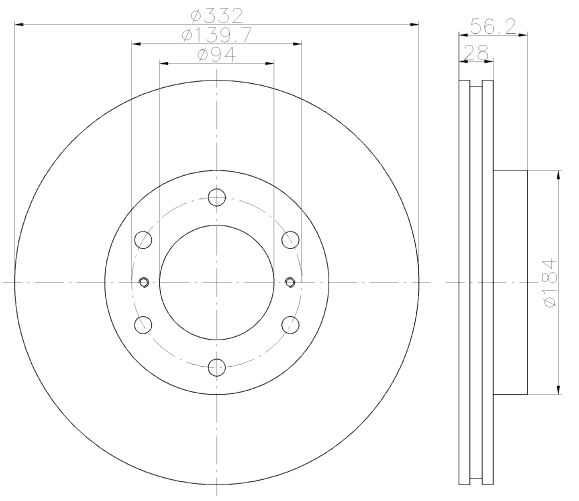

92167203

26 PRO

MITSUBISHI

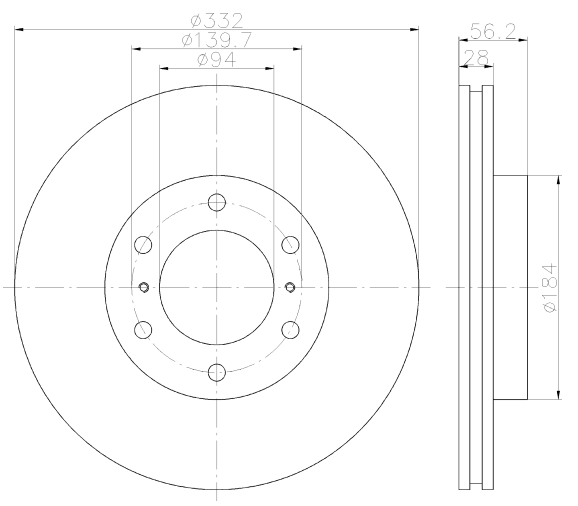

92167300

16

MITSUBISHI

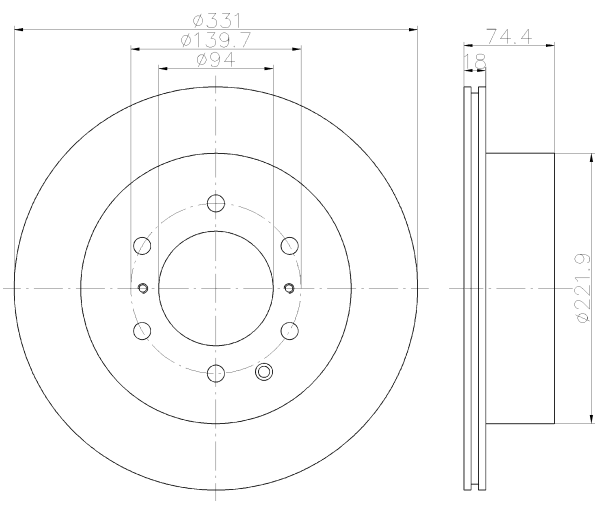

92167303

16 PRO

MITSUBISHI

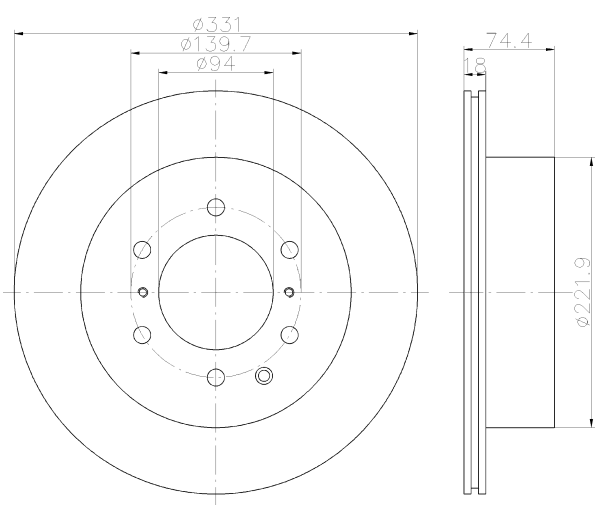

92167400

24

NISSAN, NISSAN (DONGFENG)

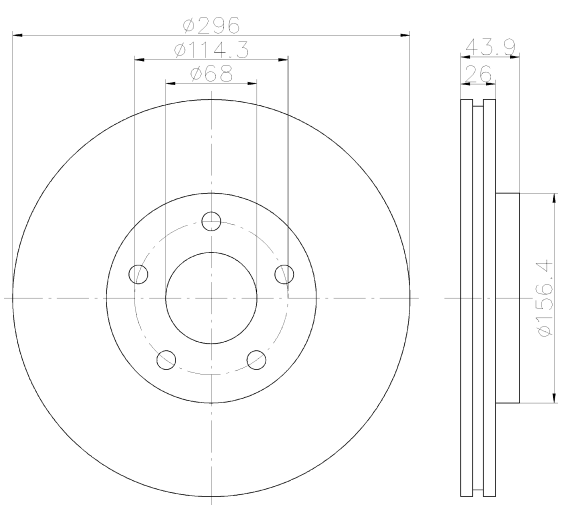

92167403

24 PRO

NISSAN, NISSAN (DONGFENG)

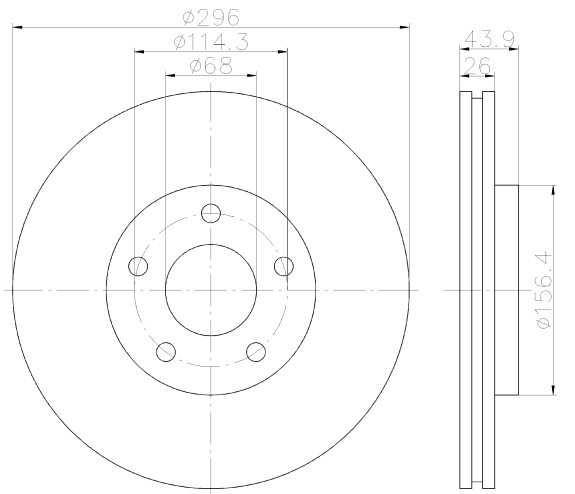

92167500

8

NISSAN, NISSAN (DONGFENG)

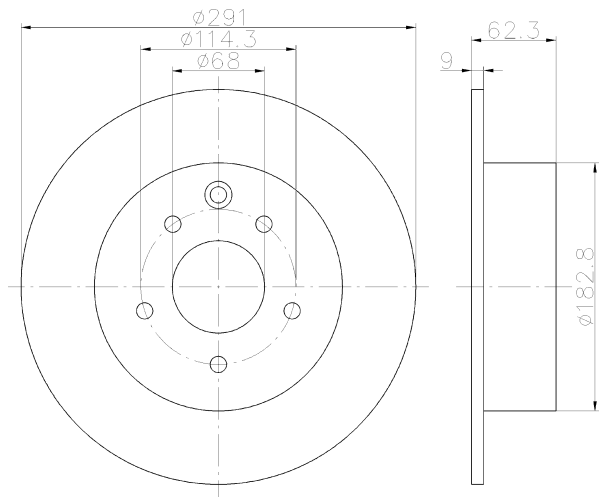

92167503

8 PRO

NISSAN, NISSAN (DONGFENG)

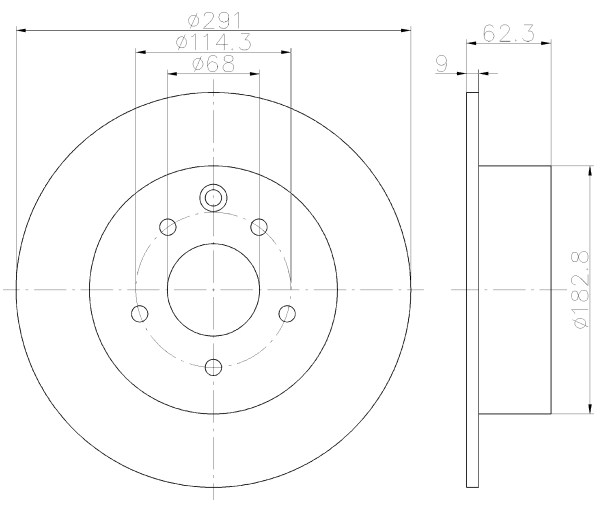

92167600

8

HSV, OPEL, VAUXHALL

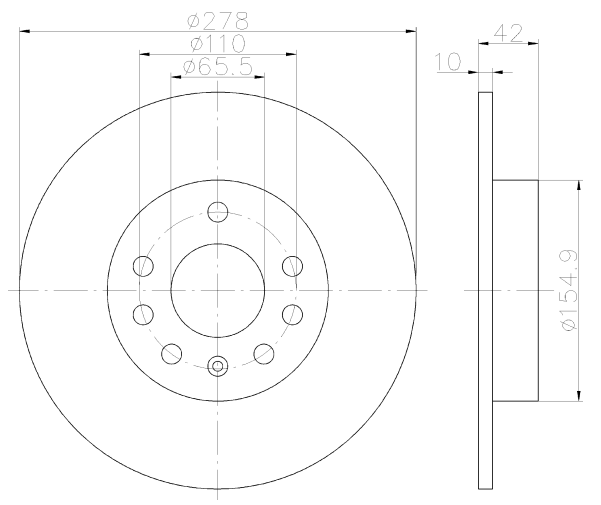

92167603

8 PRO

HSV, OPEL, VAUXHALL

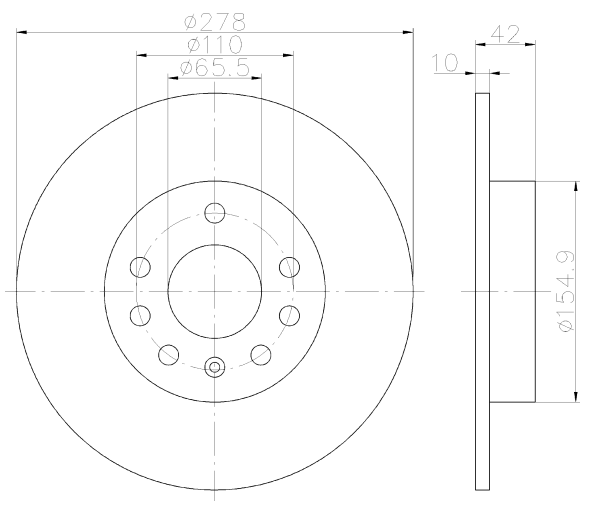

92167700

26

RENAULT

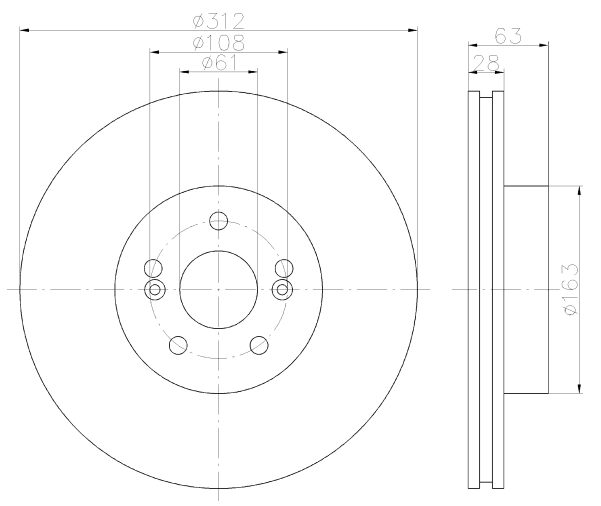

92167800

8.5

SUBARU

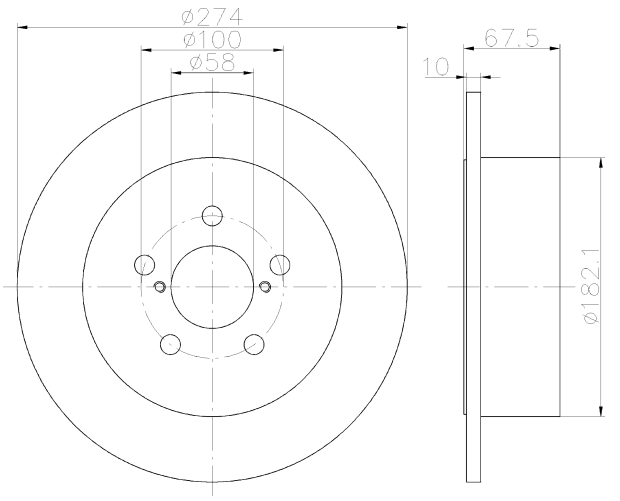

92167900

28

SUBARU

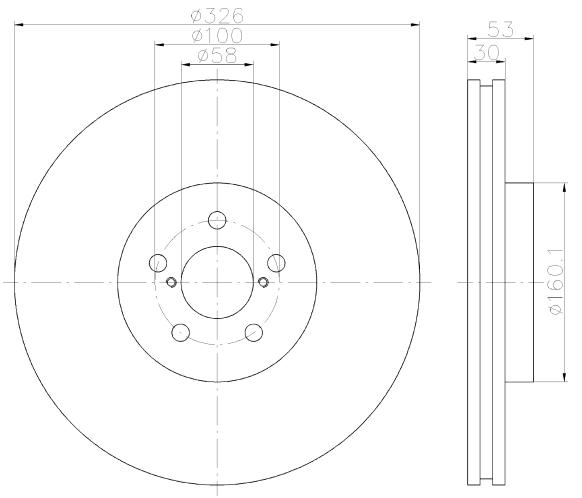

92168003

24 PRO

TOYOTA

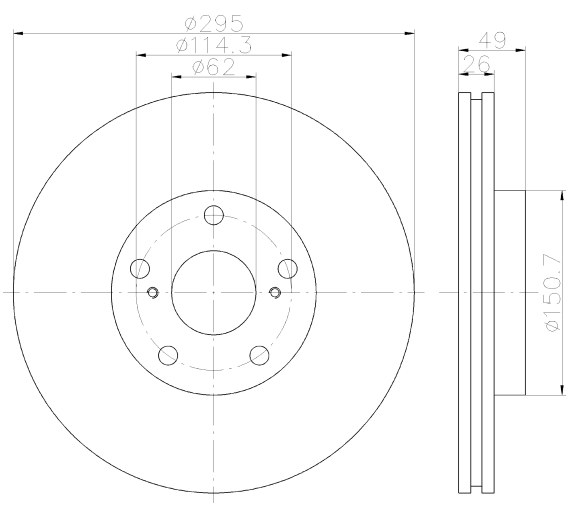

92168100

8.5

TOYOTA

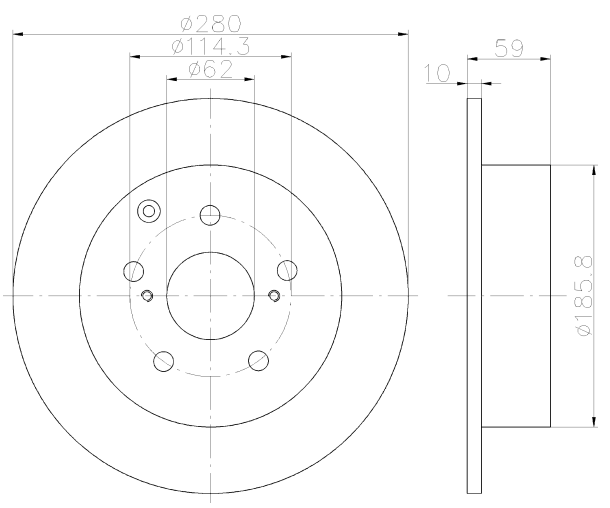

92168103

8.5 PRO

TOYOTA

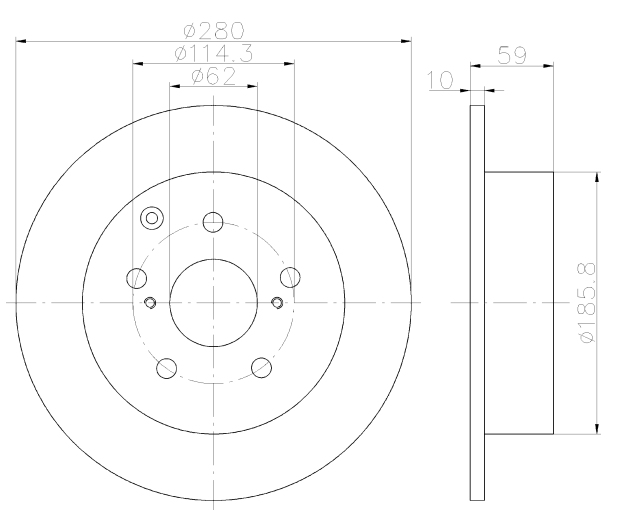

92168200

26

VOLVO, VOLVO (CHANGAN)

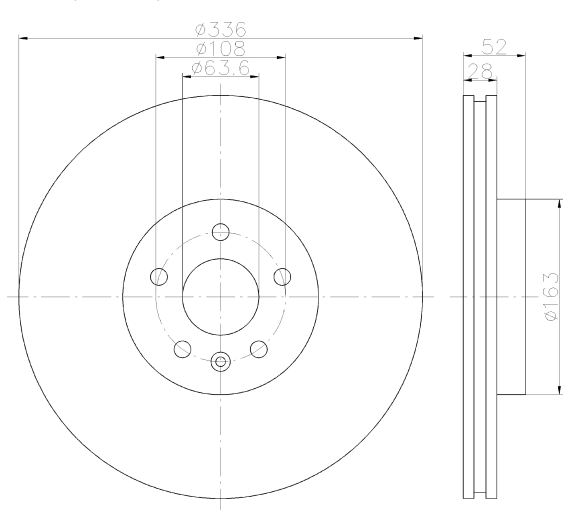

92168203

26 PRO

VOLVO, VOLVO (CHANGAN)

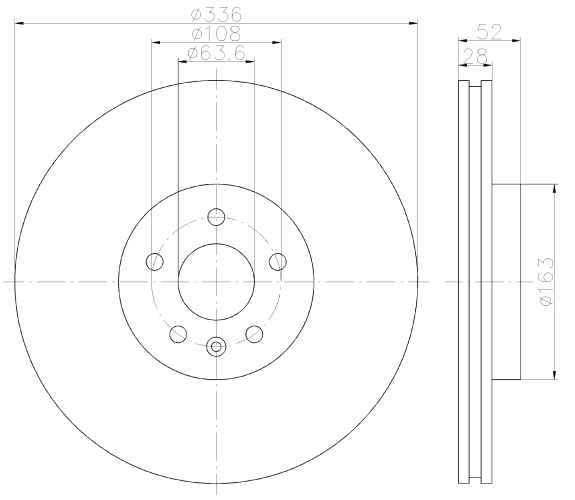

92168300

20

VOLVO, VOLVO (CHANGAN)

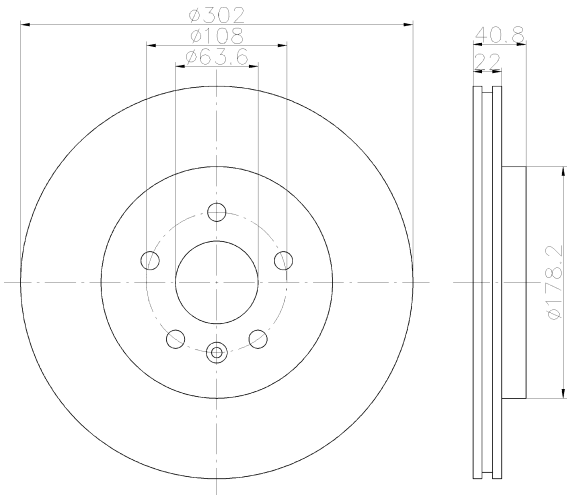

92168303

20 PRO

VOLVO, VOLVO (CHANGAN)

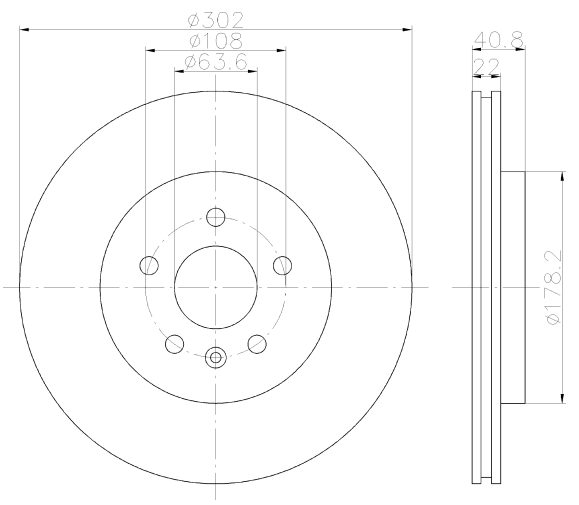

92168400

10

VOLVO, VOLVO (CHANGAN)

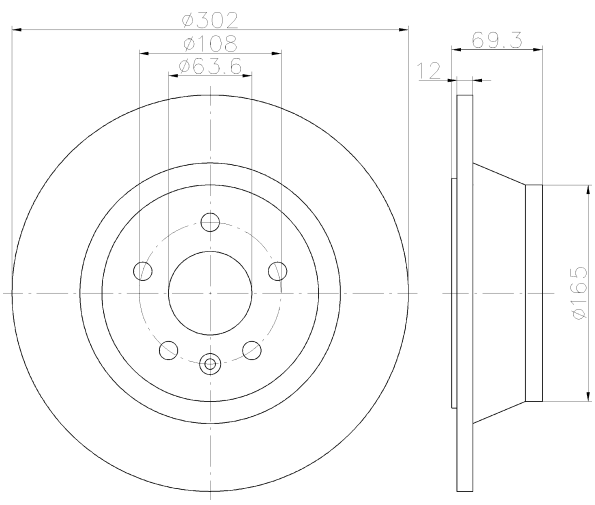

92168403

10 PRO

VOLVO, VOLVO (CHANGAN)

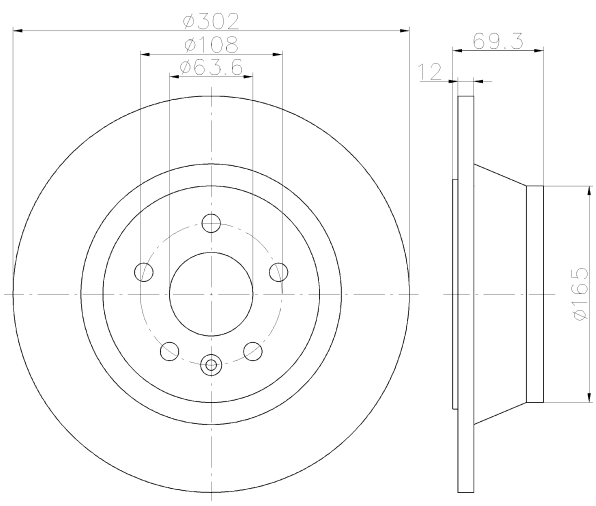

92168500

24

CITROËN, PEUGEOT

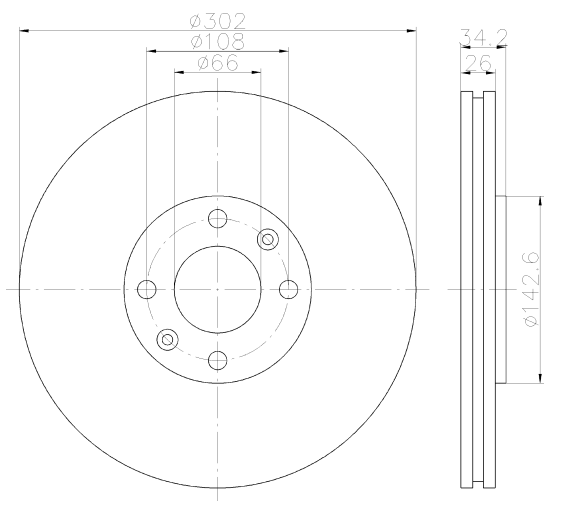

92168503

24 PRO

CITROËN, PEUGEOT

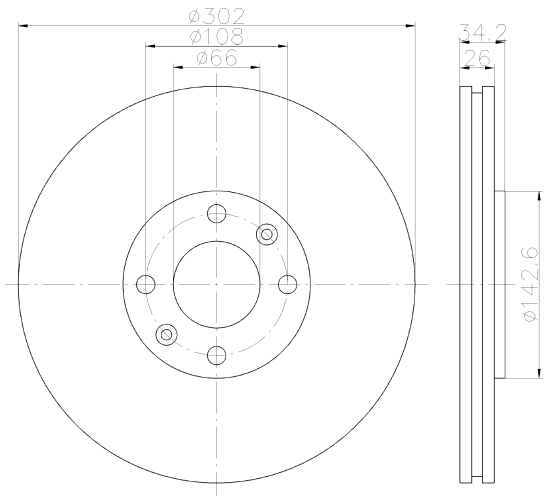

92168700

10.5 ABS

CITROËN, PEUGEOT, TOYOTA (FAW)

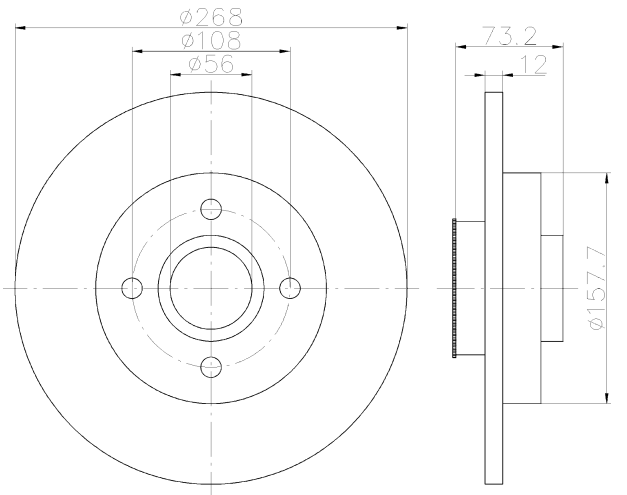

92168803

25 PRO

TOYOTA

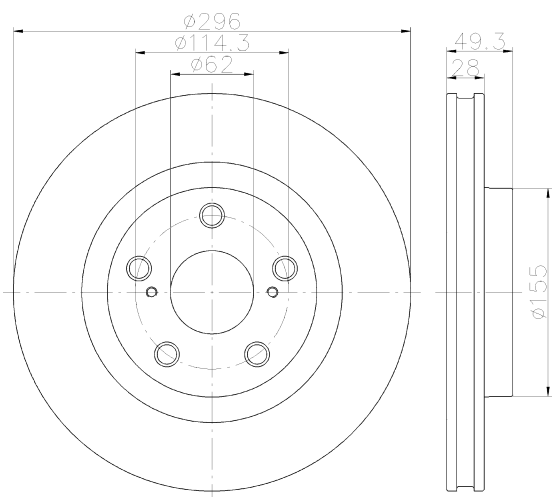

92169003

24.5 PRO

FORD AUSTRALIA, FORD USA

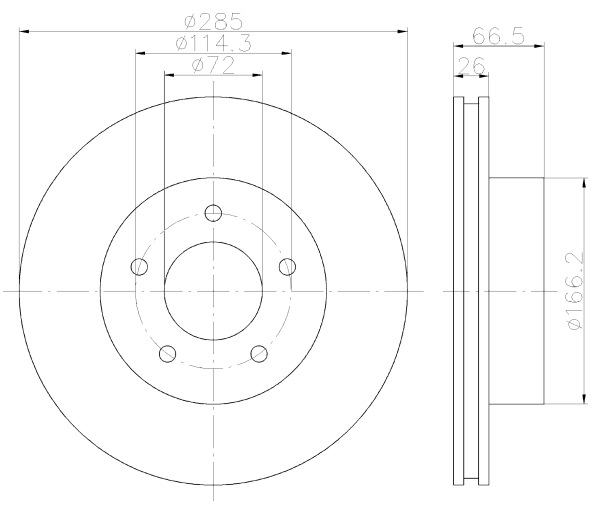

92169100

11

FORD AUSTRALIA, FORD USA

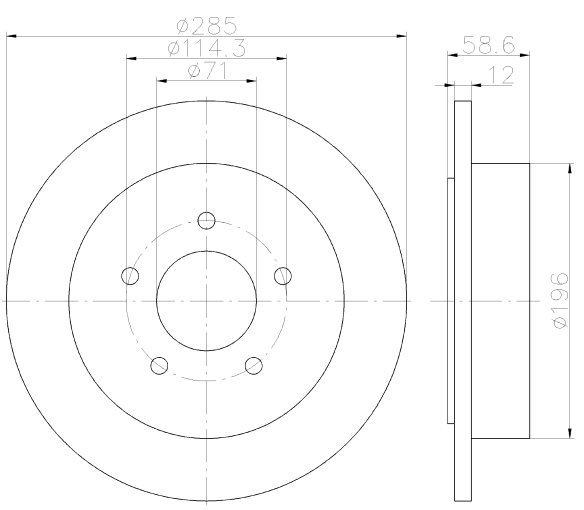

92169203

8 PRO

TOYOTA

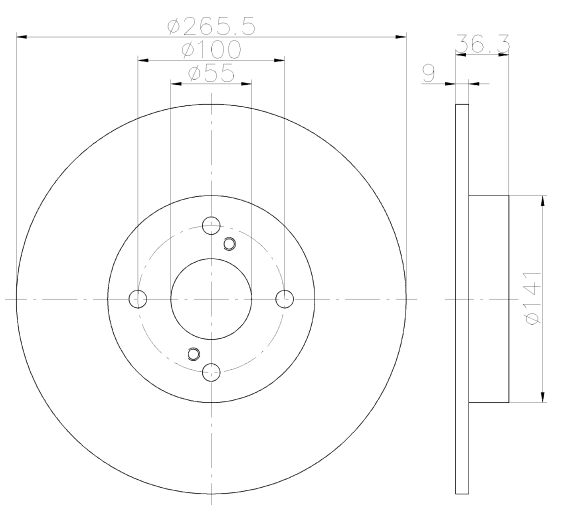

92169403

9.5 PRO

JEEP

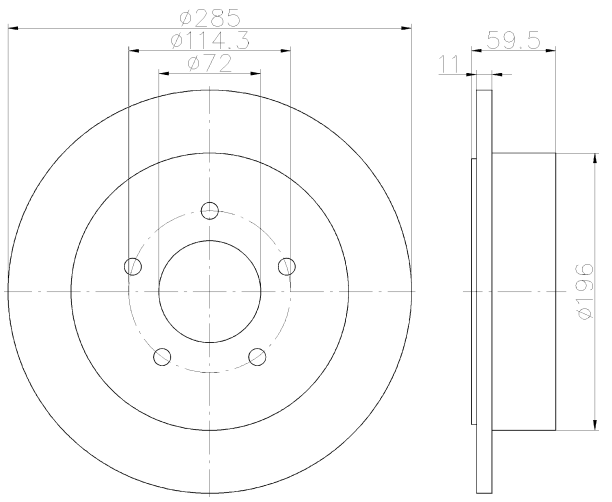

92169503

15 PRO

TOYOTA

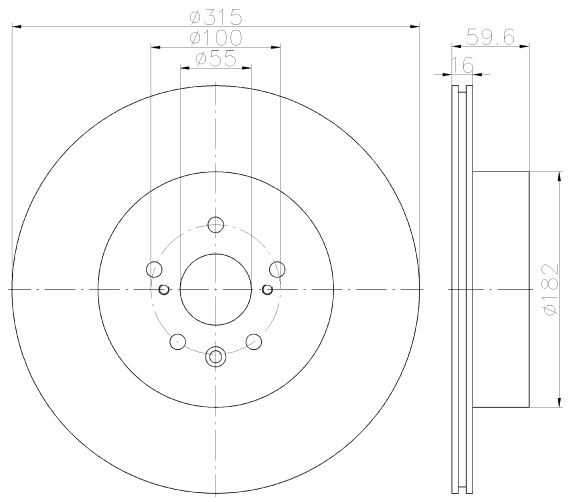

92169703

8 PRO

HONDA

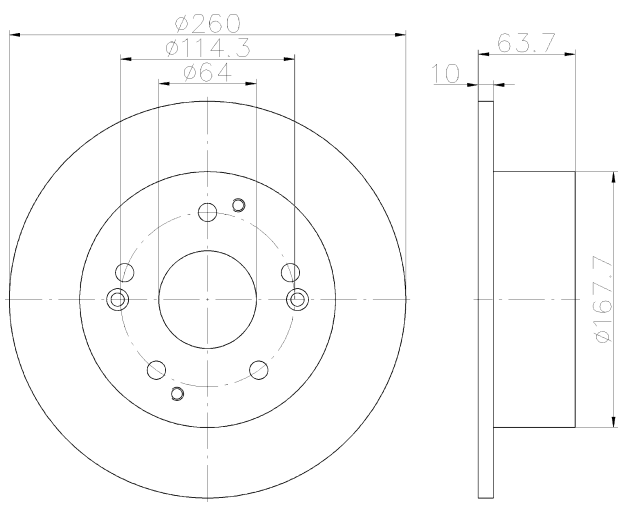

92169803

8 PRO

DAIHATSU

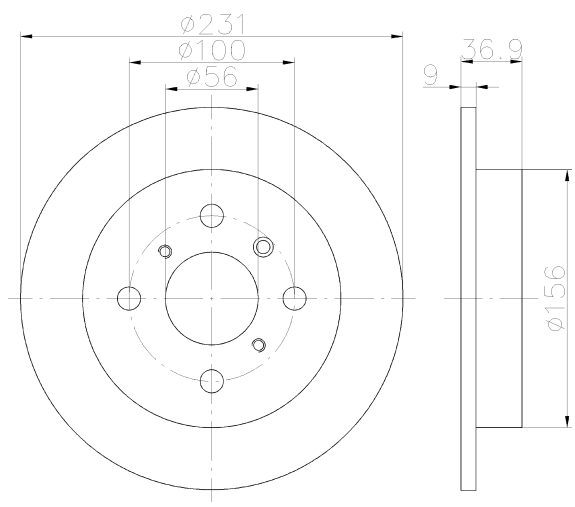

92169903

29.8 PRO

MITSUBISHI

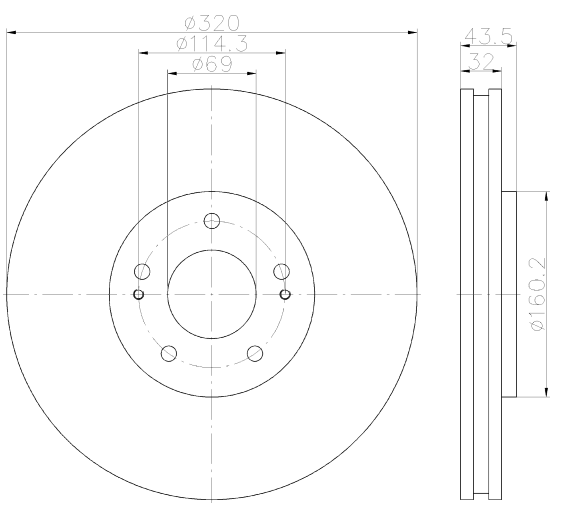

92170003

9 PRO

PERODUA

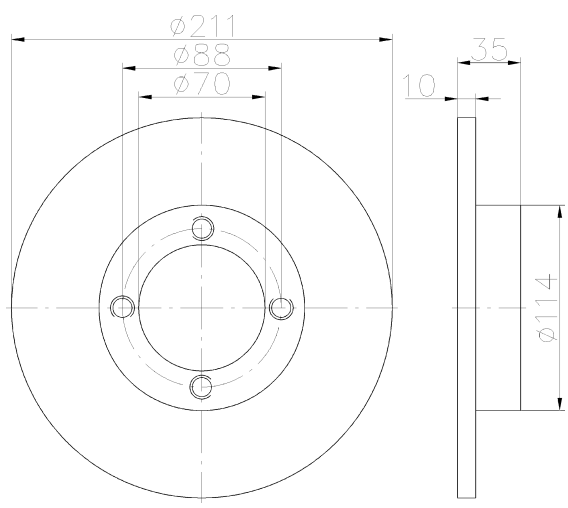

92170103

16 PRO

LEXUS, TOYOTA, TOYOTA (FAW)

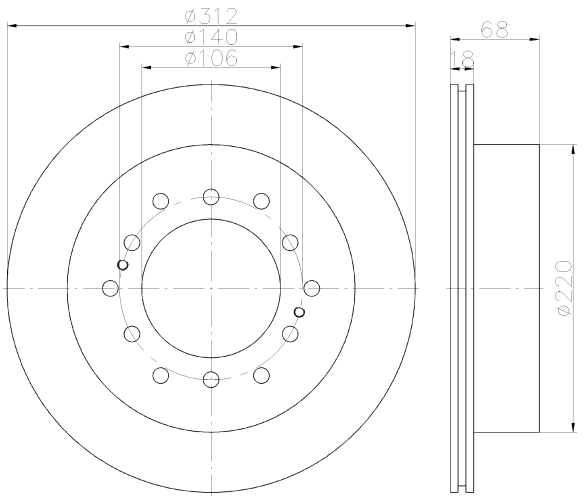

92170203

22 PRO

MG

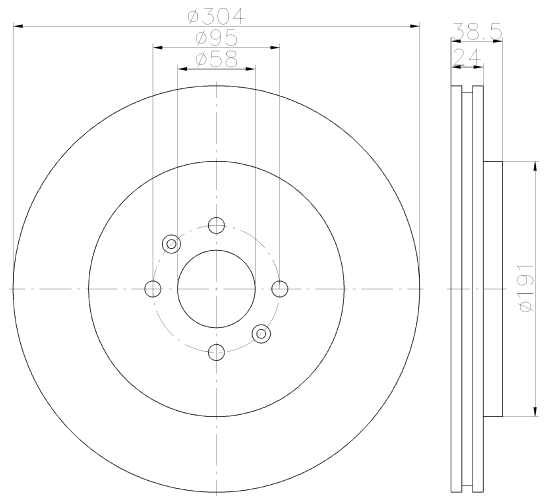

92170303

22.8 PRO

MG, ROVER

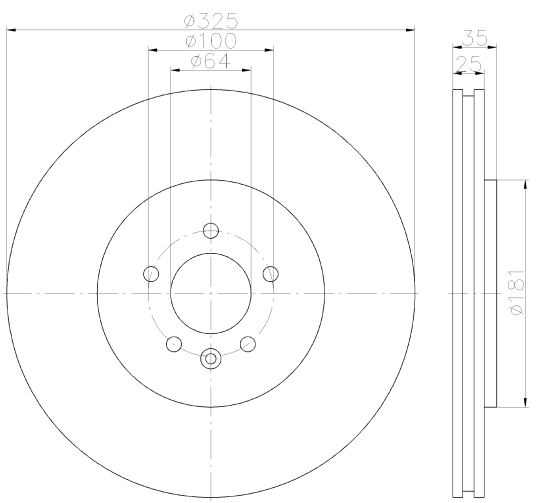

92170403

7.5 PRO

TOYOTA

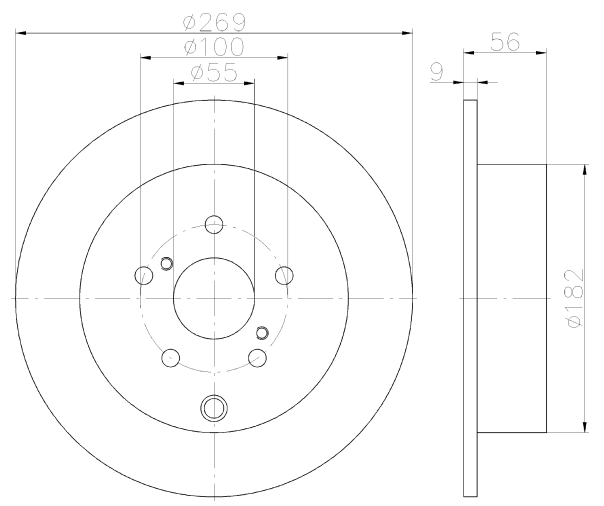

92170503

20 PRO

SUZUKI

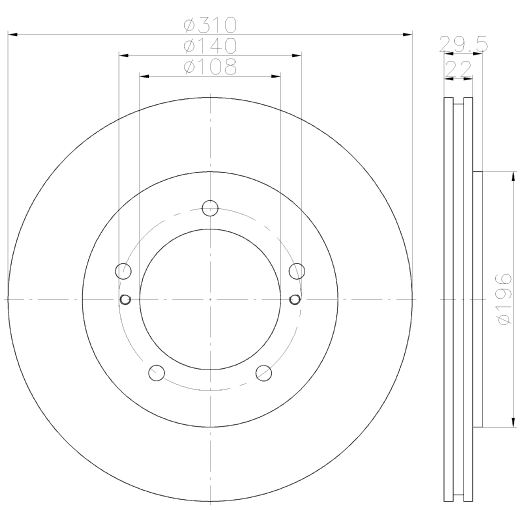

92170603

20 PRO

MITSUBISHI

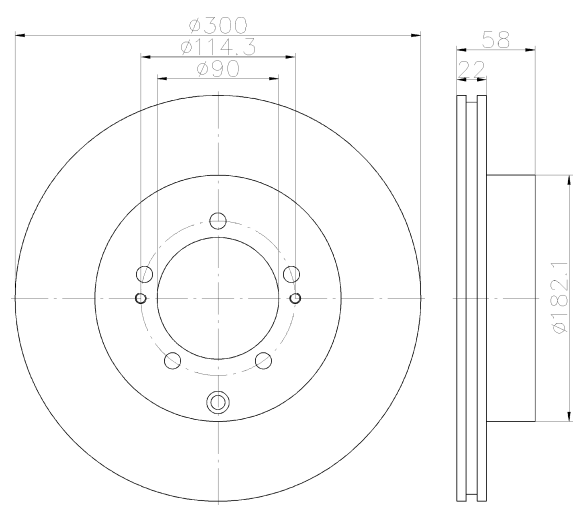

92170703

23 PRO

MG

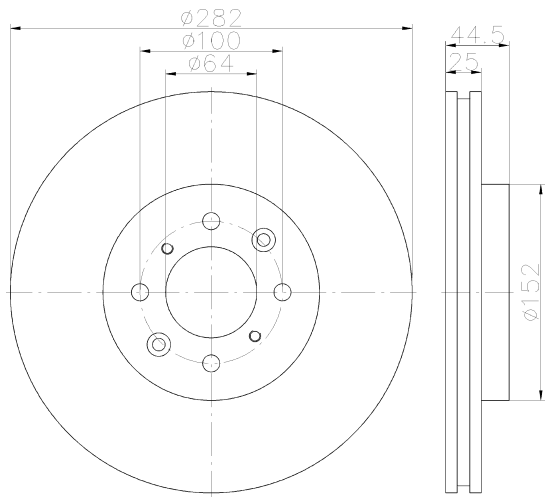

92170803

10.5 PRO

LEXUS, TOYOTA

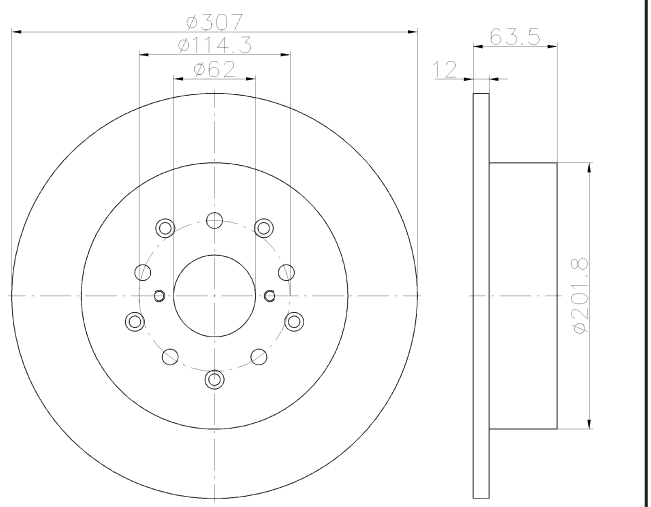

92170903

15 PRO

TOYOTA

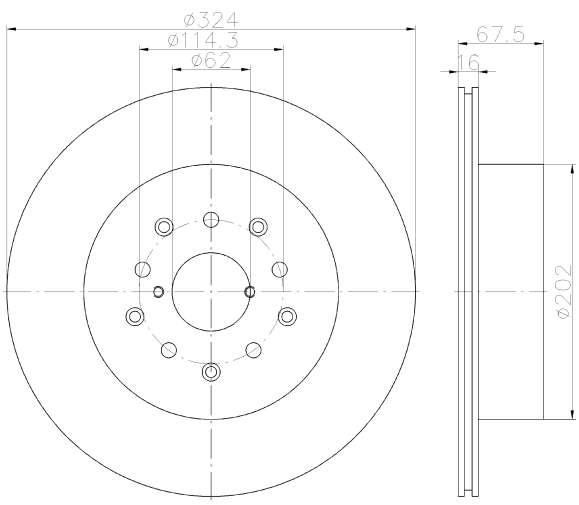

92171103

22 PRO

LTI

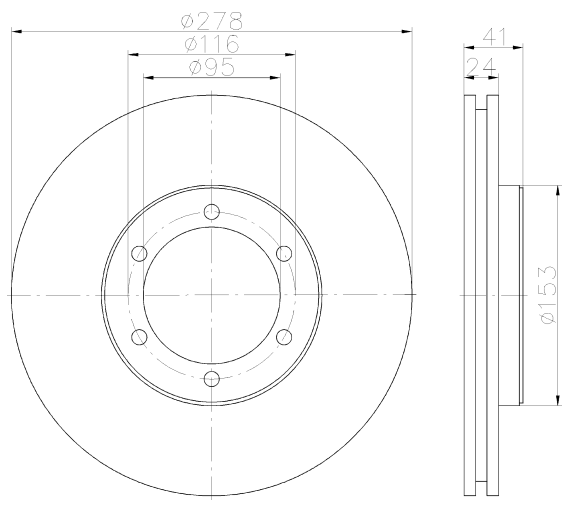

92171203

8.4 PRO

MITSUBISHI, PROTON

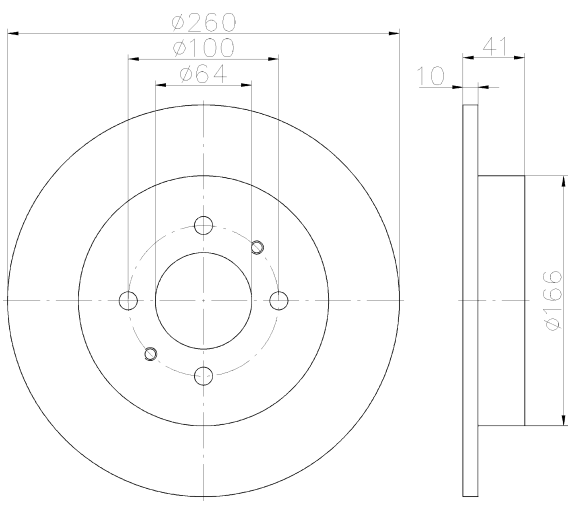

92171303

18.4 PRO

MITSUBISHI

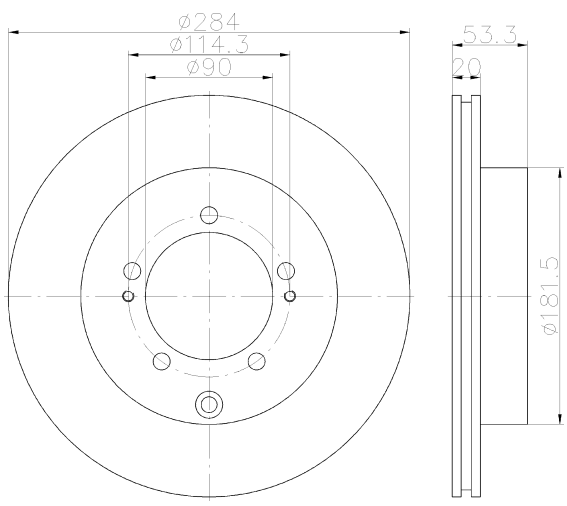

92171503

26 PRO

LEXUS, TOYOTA

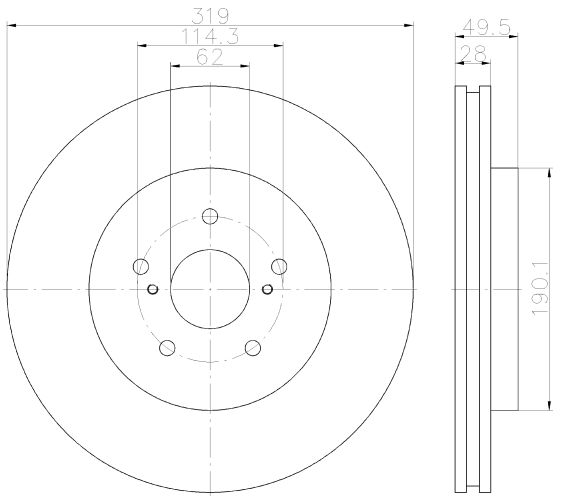

92171603

8.5 PRO

LEXUS, TOYOTA

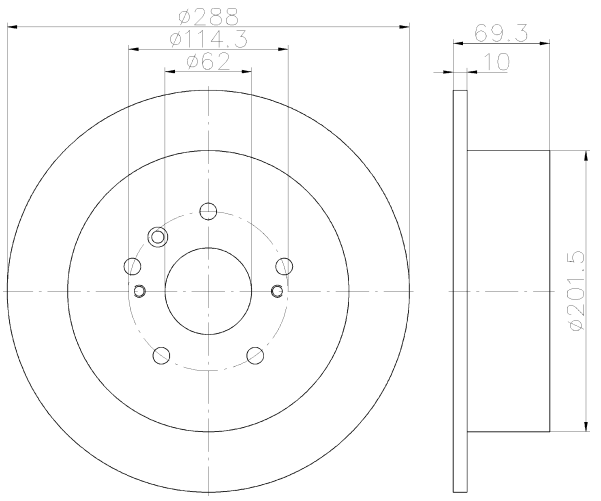

92171700

21

IVECO

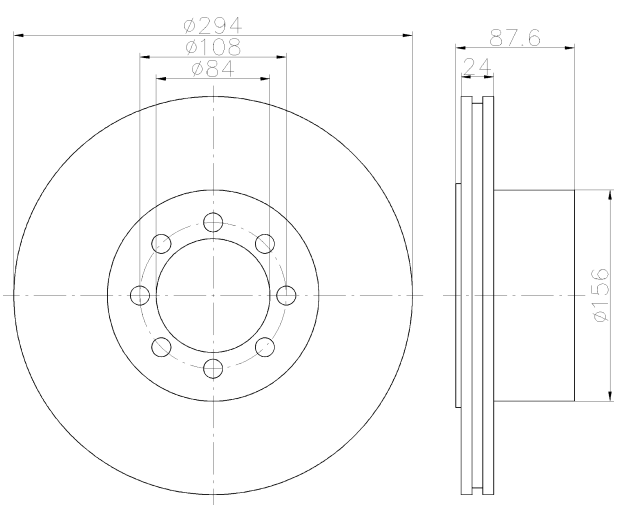

92171903

30 PRO

MERCEDES-BENZ

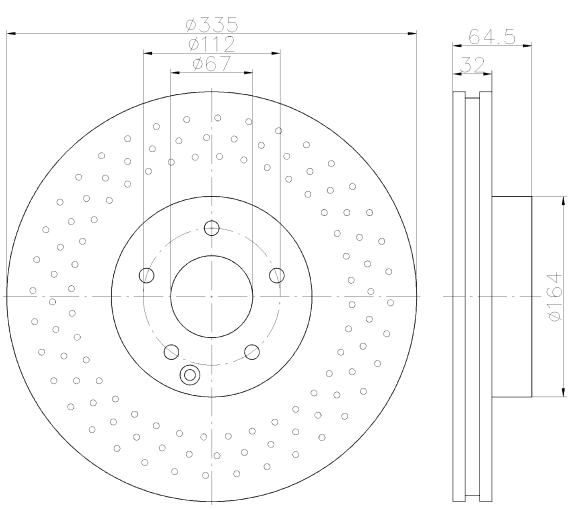

92172003

8 PRO

HONDA

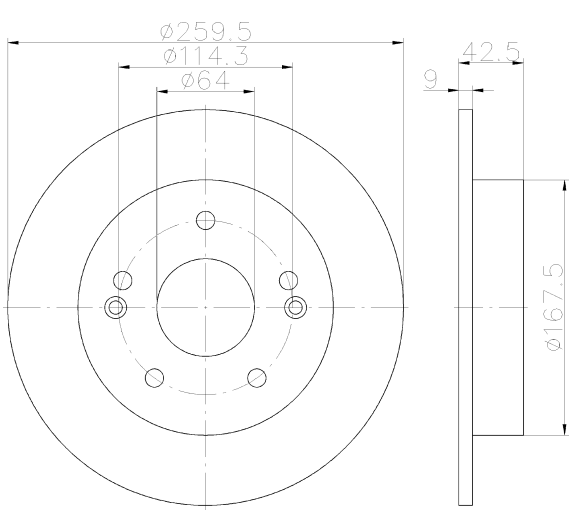

92172103

8 PRO

HONDA

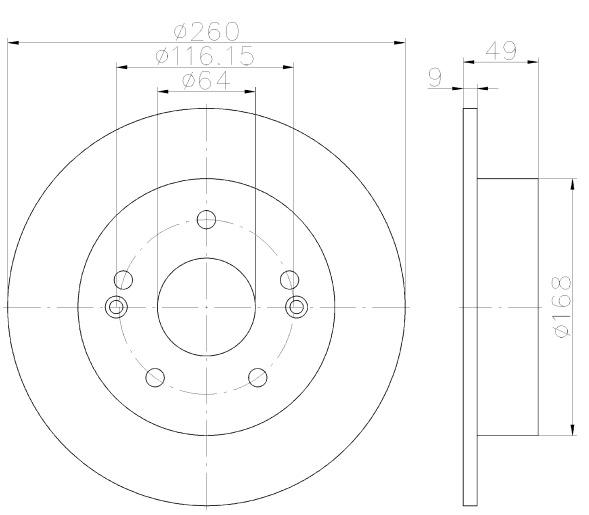

92172403

8.9 PRO

FORD

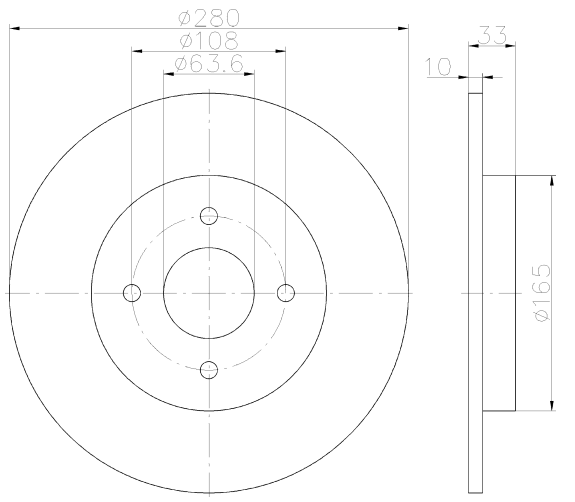

92172703

23.4 PRO

NISSAN

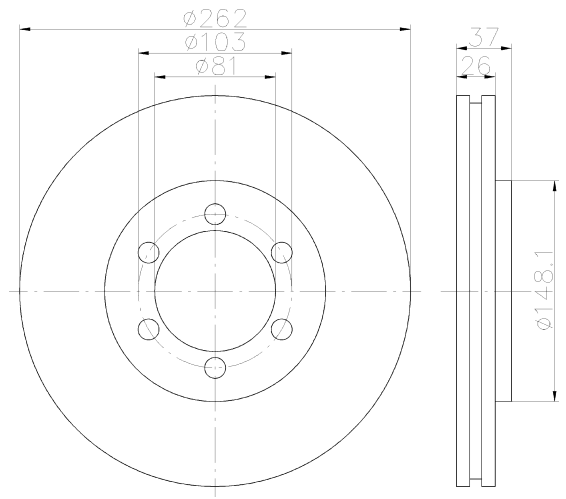

92172803

16.5 PRO

LEXUS, TOYOTA, TOYOTA (FAW)

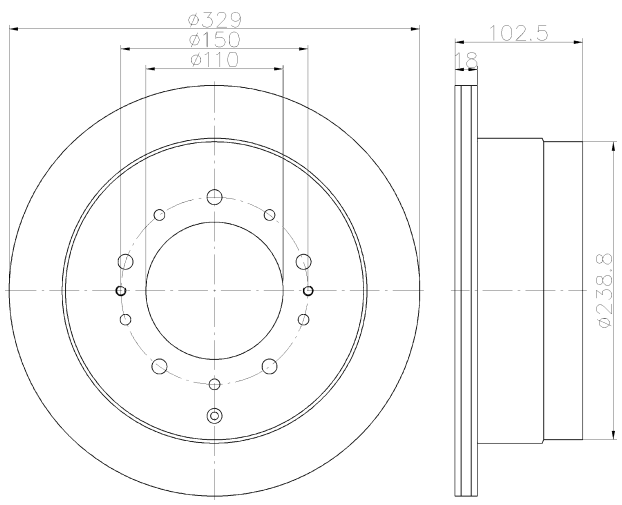

92173103

23 PRO

TOYOTA

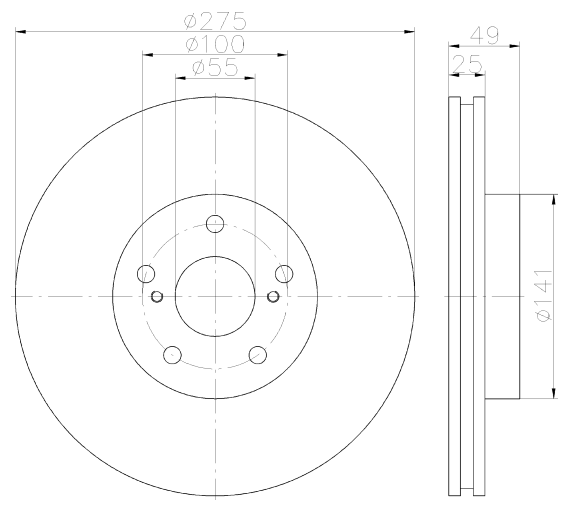

92173203

24.5 PRO

HYUNDAI

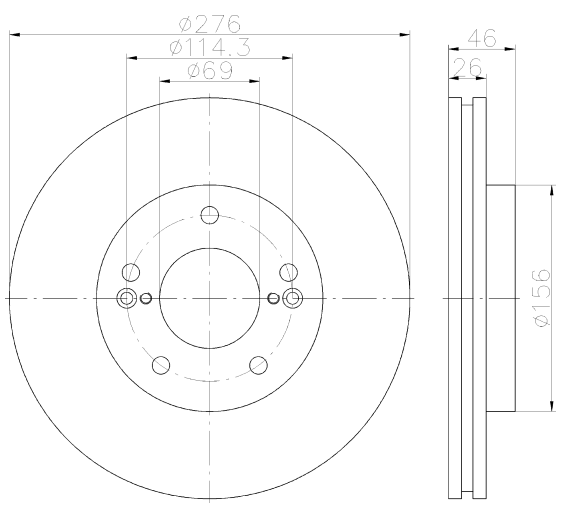

92173403

10 PRO

HONDA

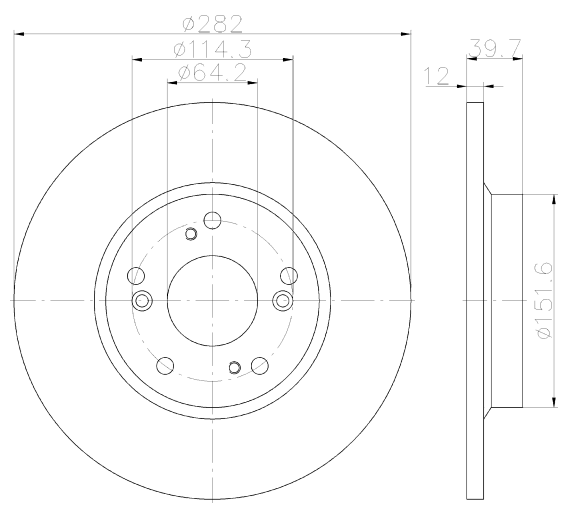

92173503

28 PRO

JAGUAR

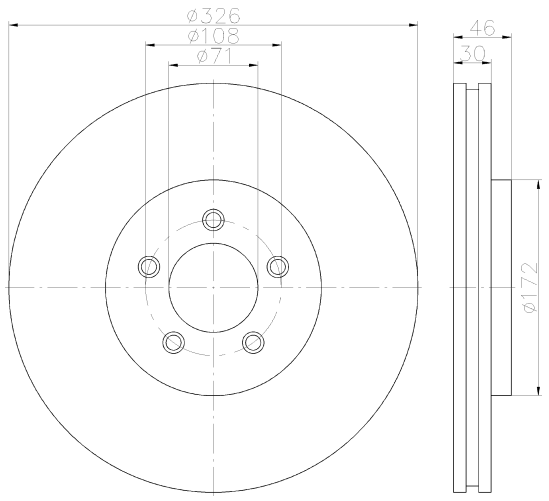

92173603

16 PRO

SUBARU

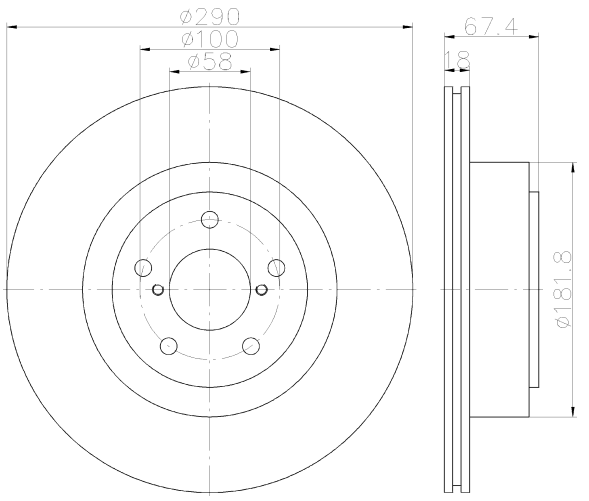

92173703

18 PRO

SUBARU

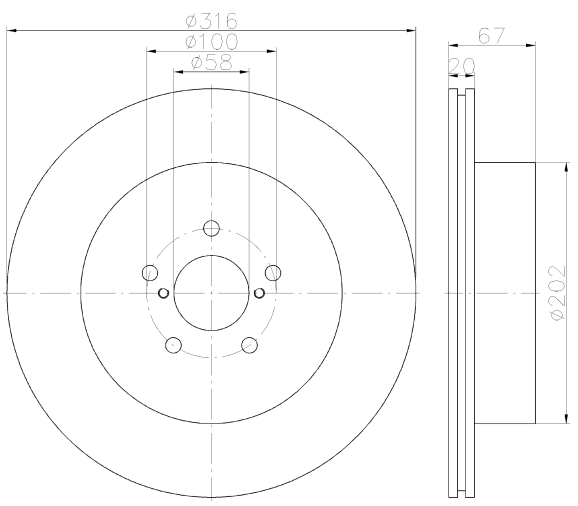

92173803

26 PRO

LEXUS

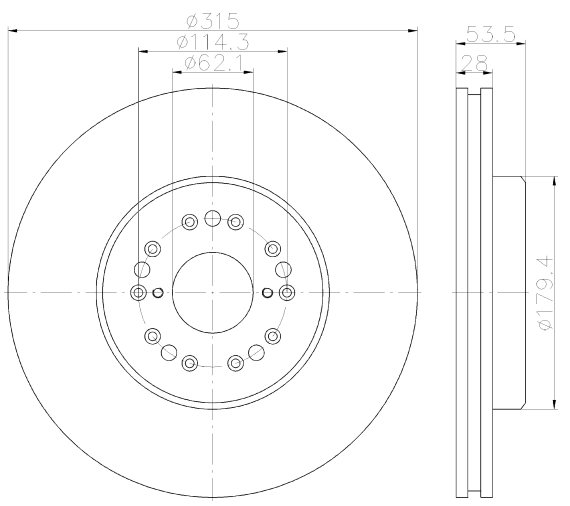

92174003

25.4 PRO

RENAULT

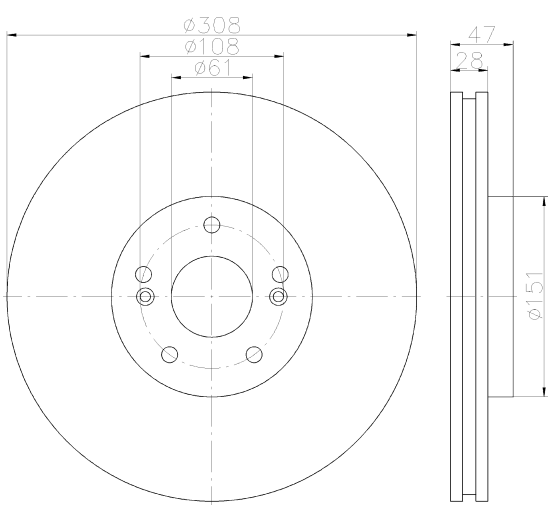

92174100

10.4

LAND ROVER

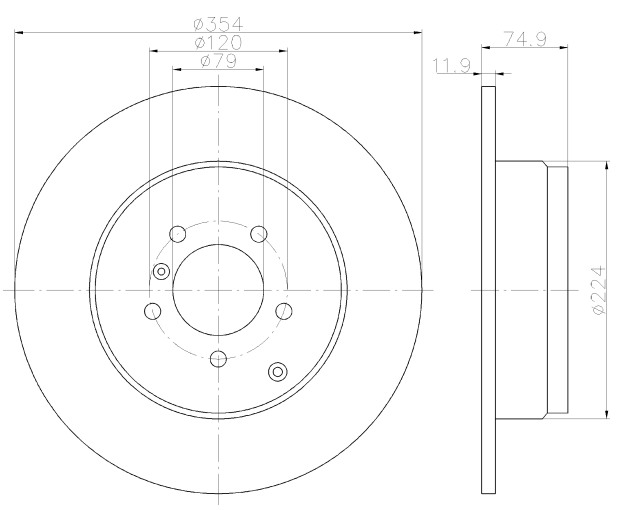

92174203

20 PRO

AUDI, VOLKSWAGEN

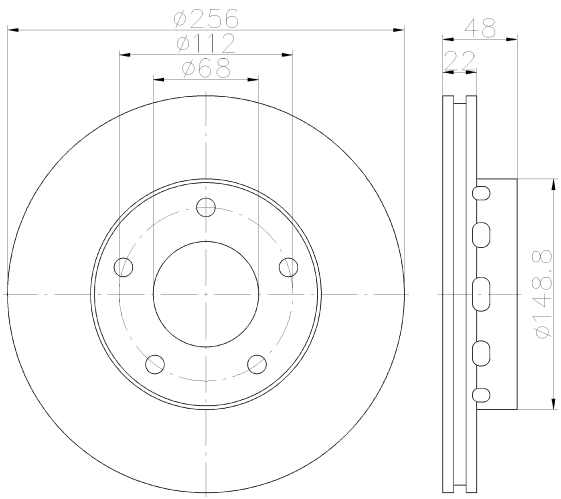

92174303

26 PRO

LEXUS, TOYOTA

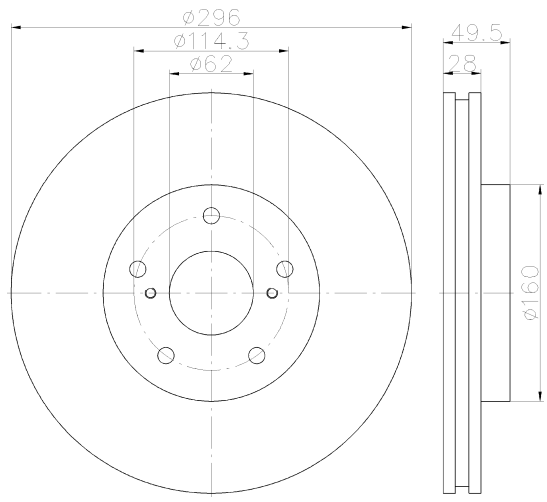

92174403

22 PRO

MAZDA

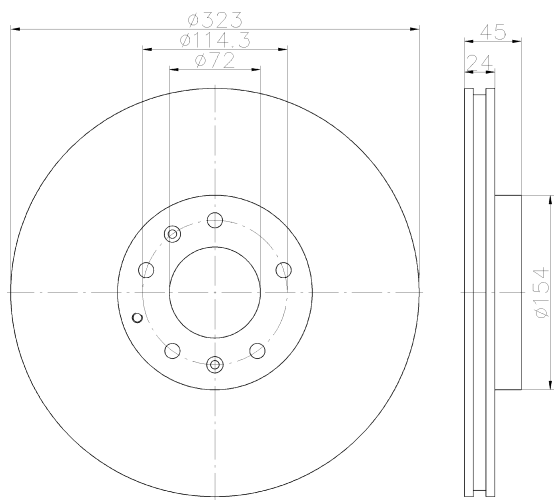

92174503

16 PRO

MAZDA

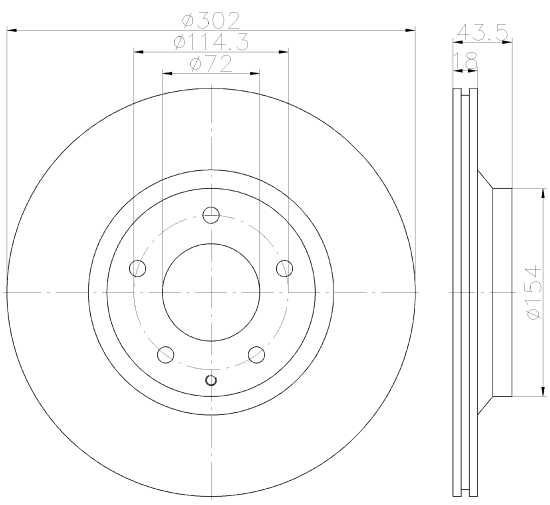

92174603

22 PRO

NISSAN

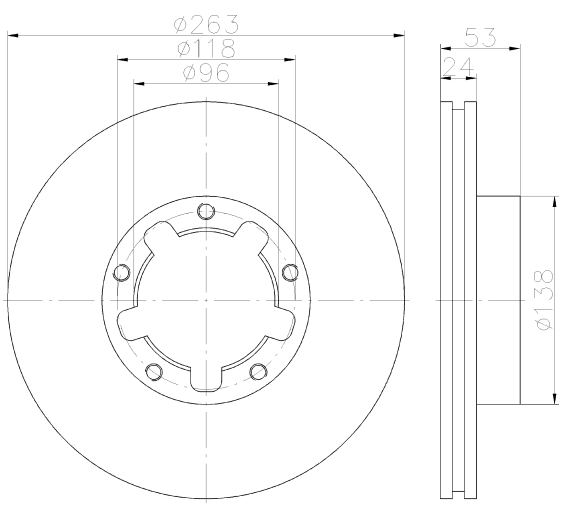

92174803

25.6 PRO

HOLDEN, ISUZU

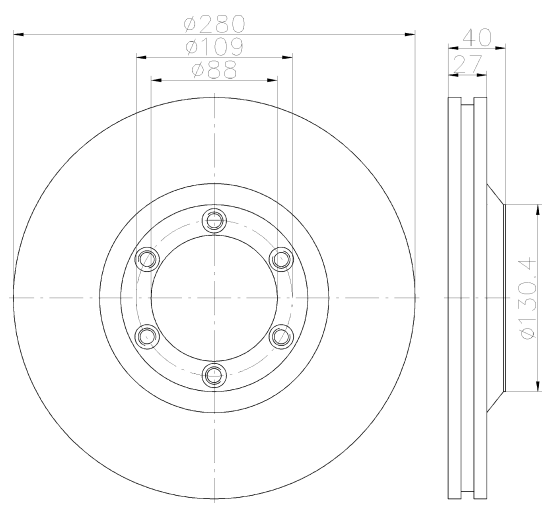

92174900

9

LEXUS

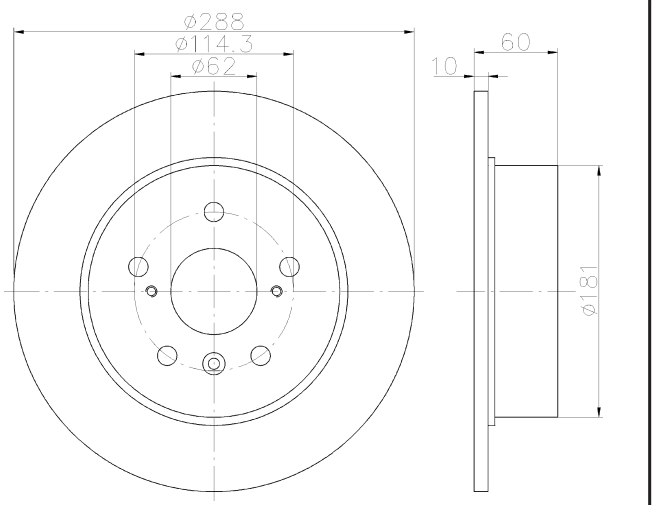

92174903

PRO

9

LEXUS

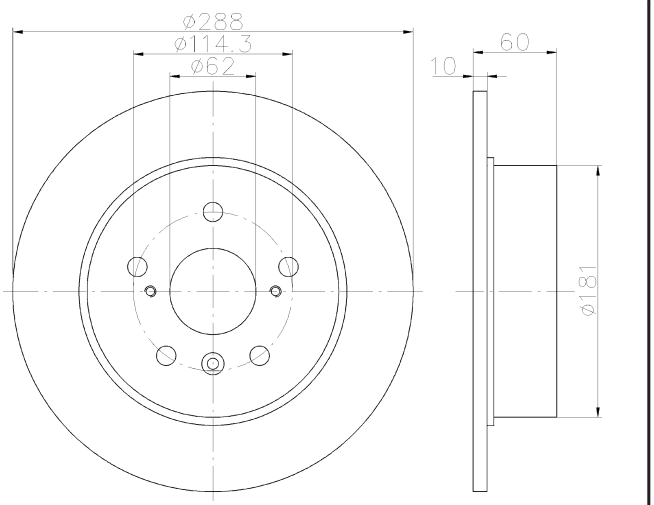

92175003

PRO

8.4

MINI

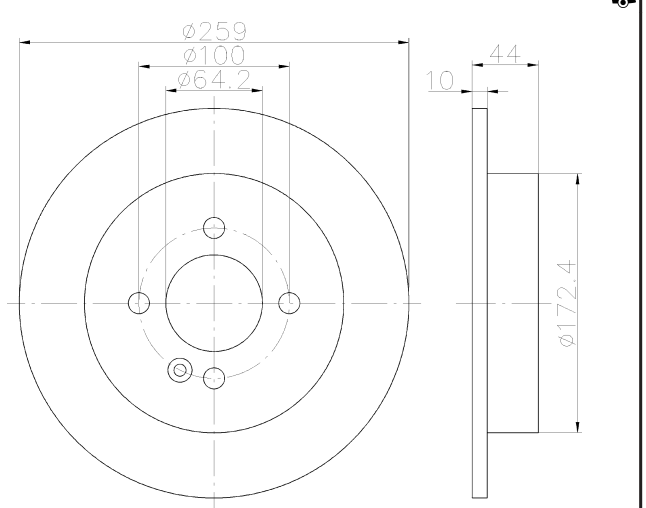

92175103

PRO

10.6

DACIA, LADA, RENAULT

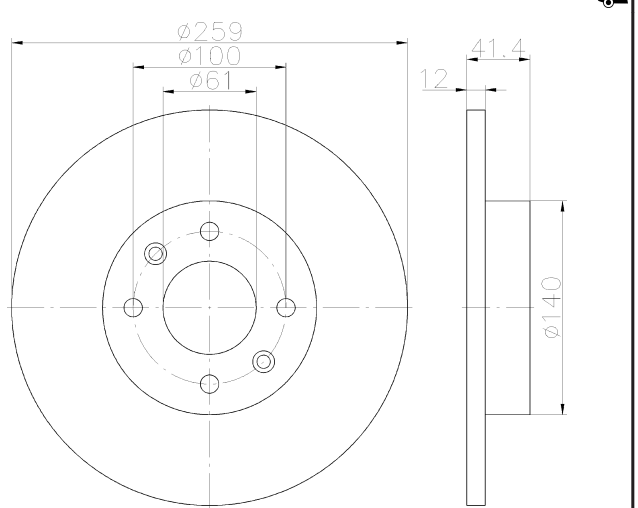

92175503

PRO

18

LAND ROVER

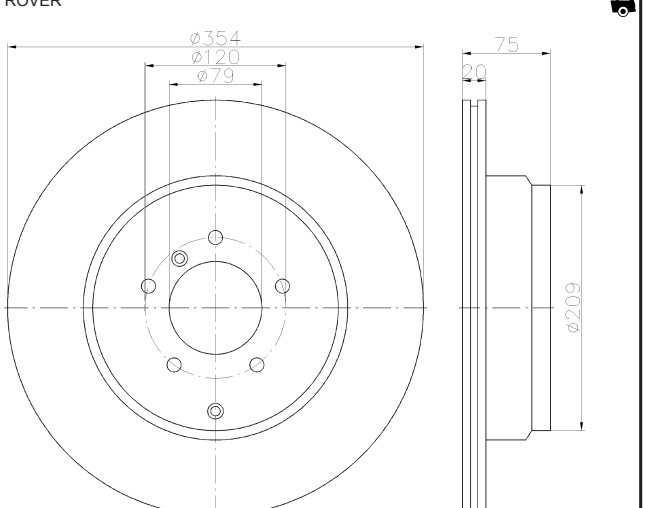

92175603

PRO

20

MAZDA

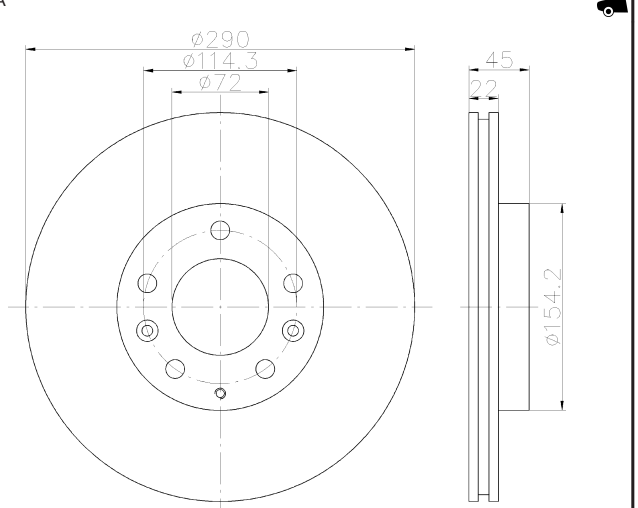

92175700

9.5 ABS

RENAULT

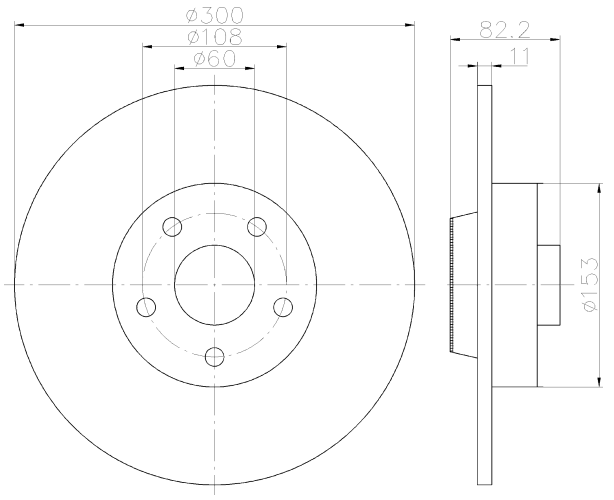

92175703

9.5 PRO

RENAULT

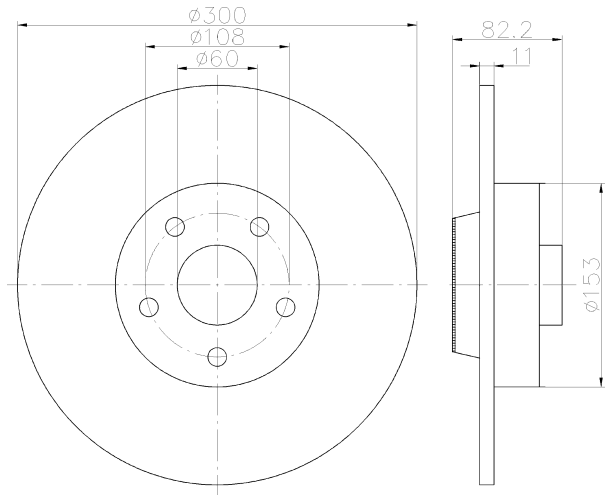

92175803

19 PRO

HONDA

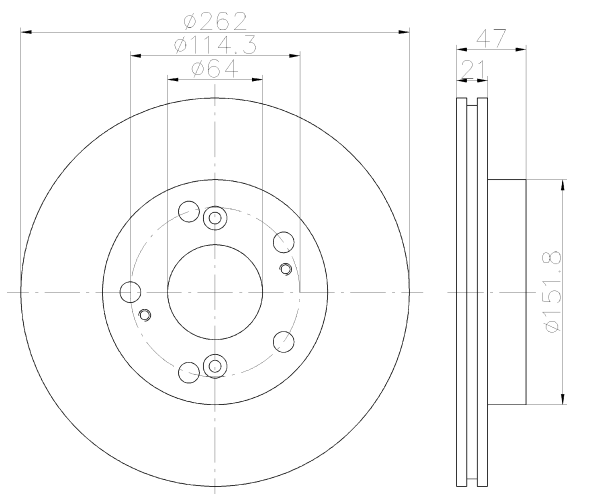

92175900

20

MAZDA

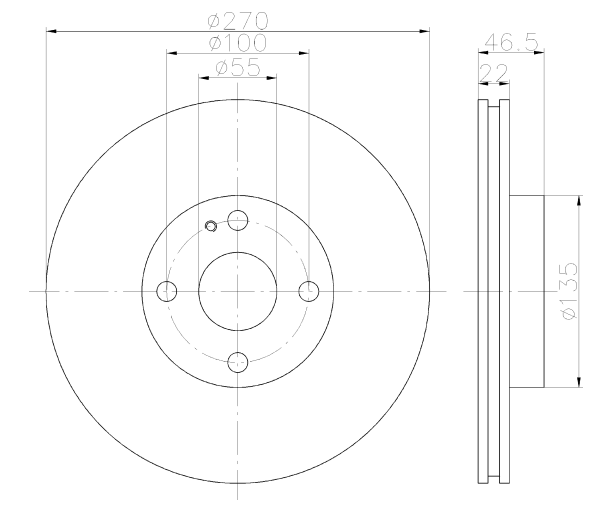

92175903

20 PRO

MAZDA

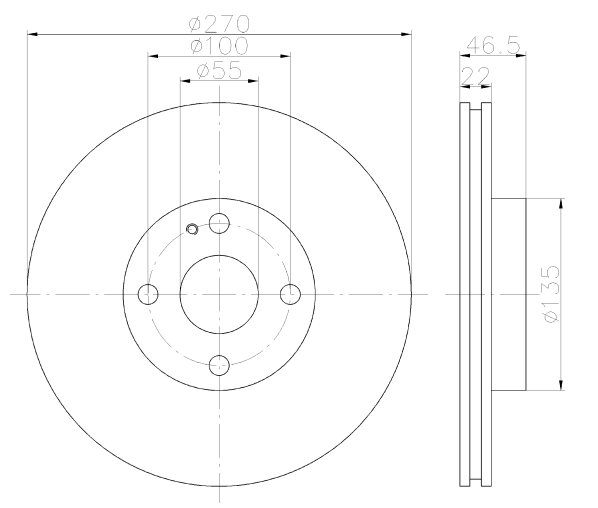

92176003

21 PRO

FORD, FORD AUSTRALIA

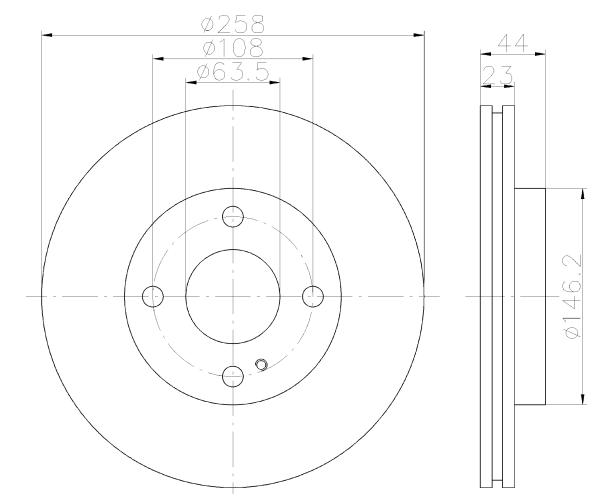

92176103

22.4 PRO

BMW, BMW (BRILLIANCE)

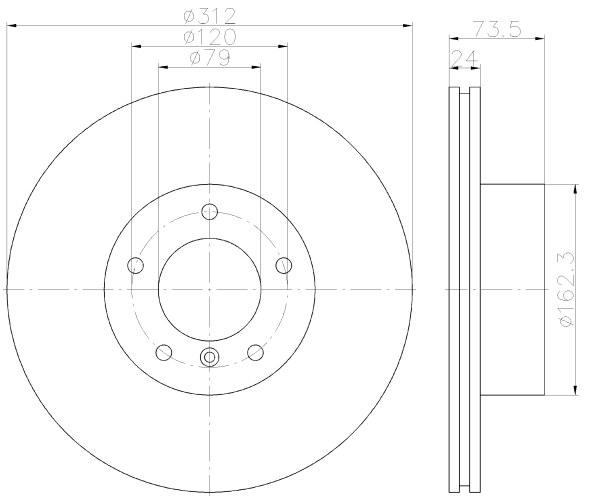

92176203

20 PRO

MERCEDES-BENZ

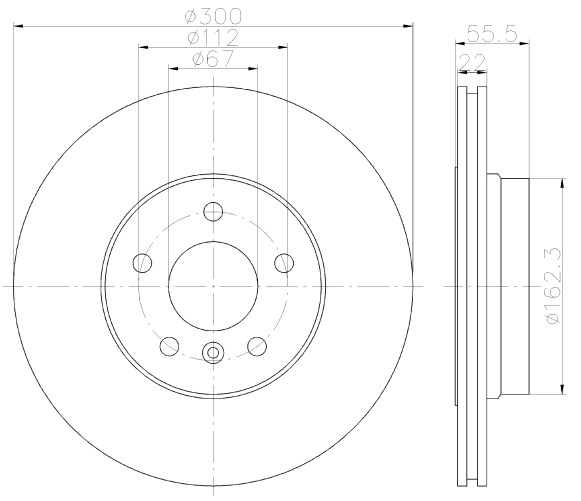

92176303

19.4 PRO

MERCEDES-BENZ

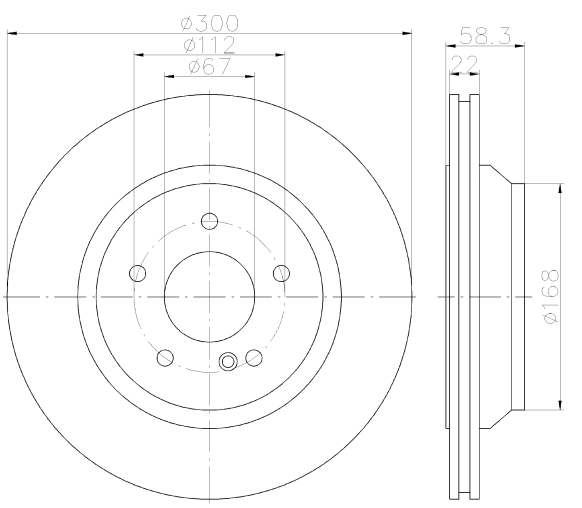

92176403

30 PRO

MERCEDES-BENZ

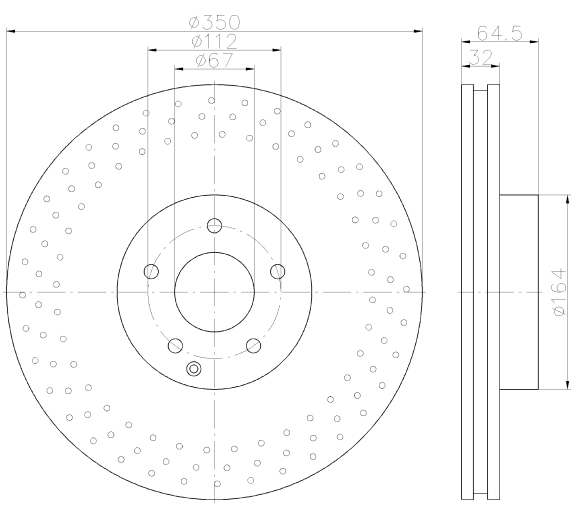

92176503

10 PRO

MERCEDES-BENZ

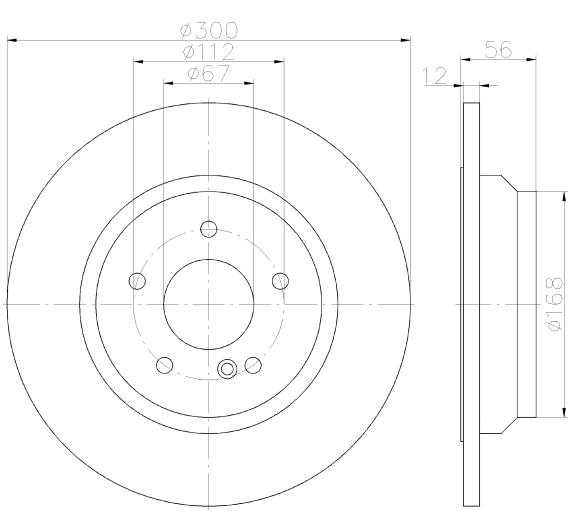

92176603

29.4 PRO

MERCEDES-BENZ

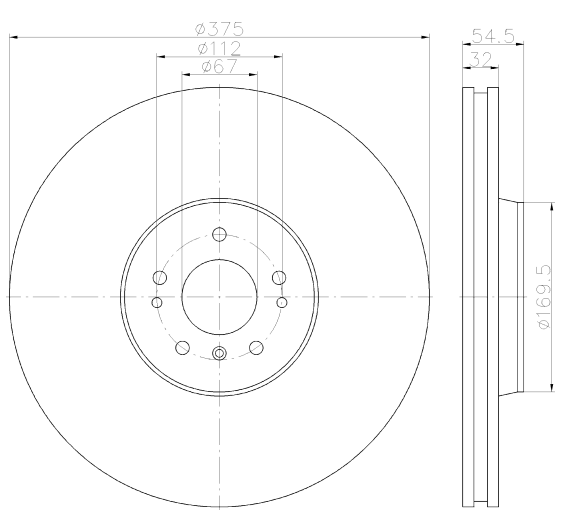

92176803

20 PRO

AUDI, VOLKSWAGEN

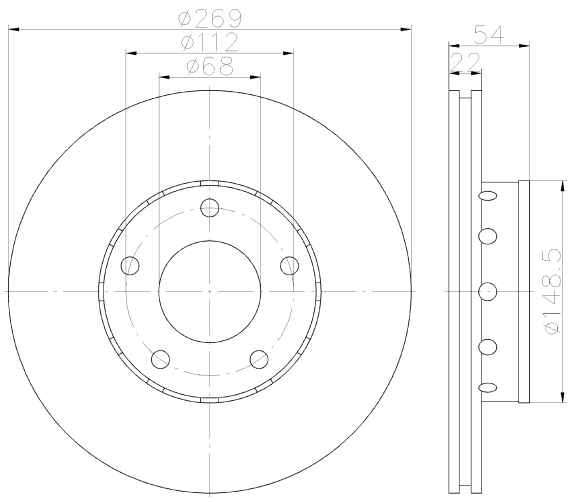

92176903

20 PRO

AUDI

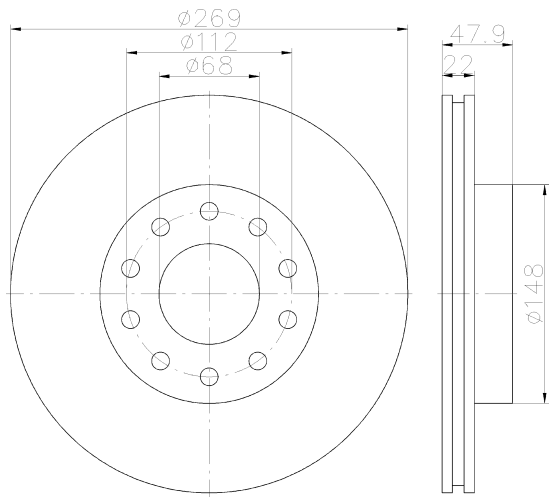

92177003

20 PRO

AUDI, VOLKSWAGEN

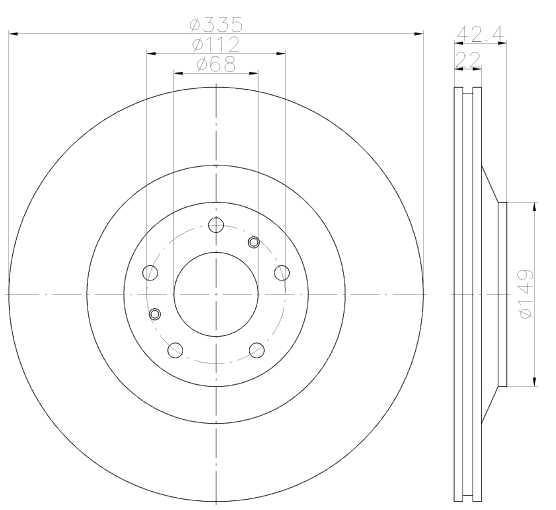

92177103

26.5 PRO

CHRYSLER, CHRYSLER (BBDC)

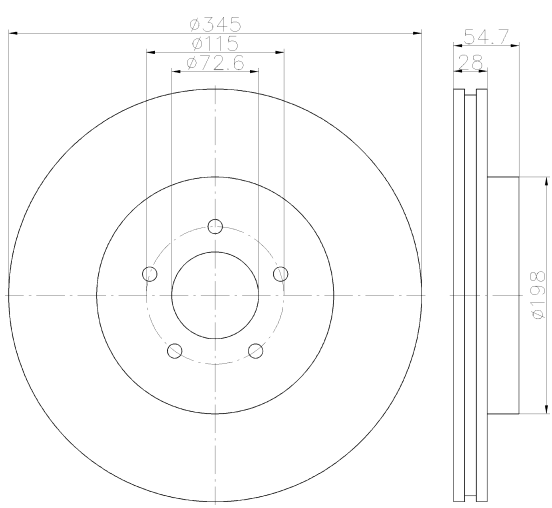

92177203

20.5 PRO

CHRYSLER, CHRYSLER (BBDC), LANCIA

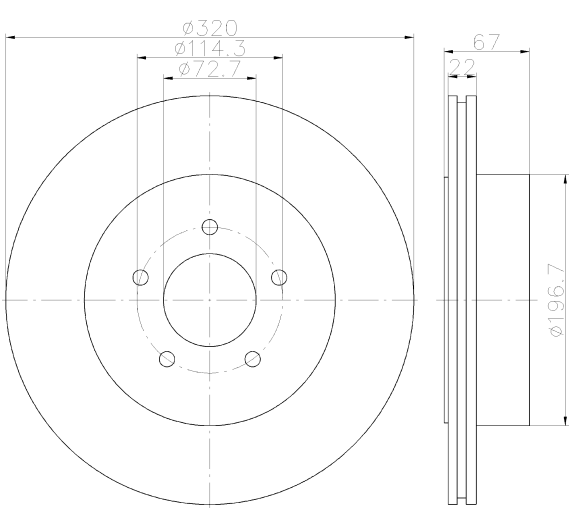

92177303

8.5 PRO

CHRYSLER, DODGE, JEEP

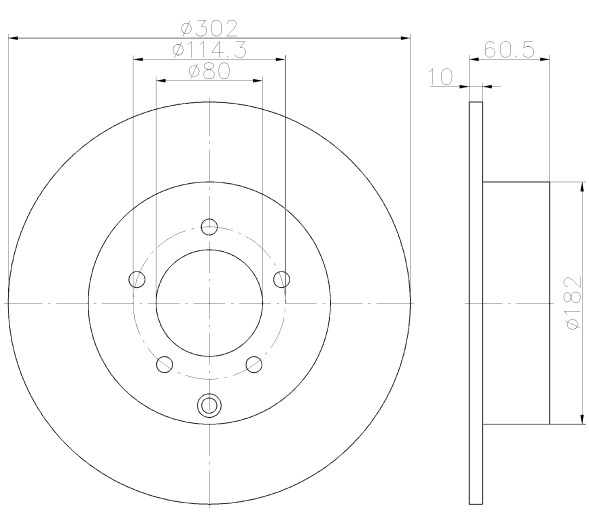

92177403

12.5 PRO

JEEP

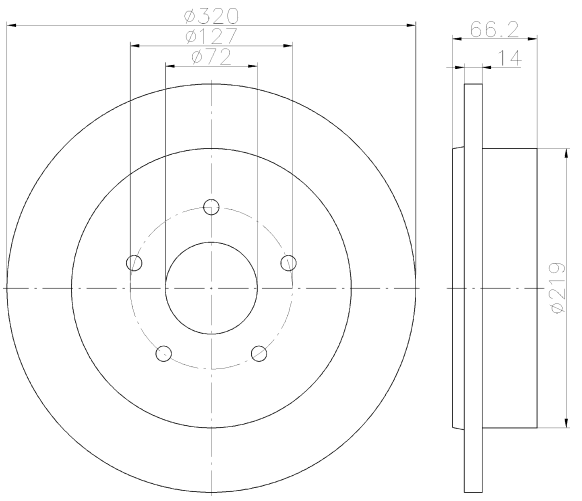

92177803

23 PRO

HONDA

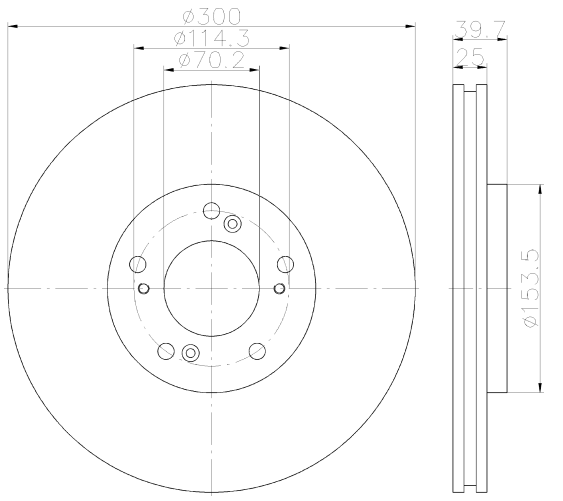

92177903

23 PRO

HONDA

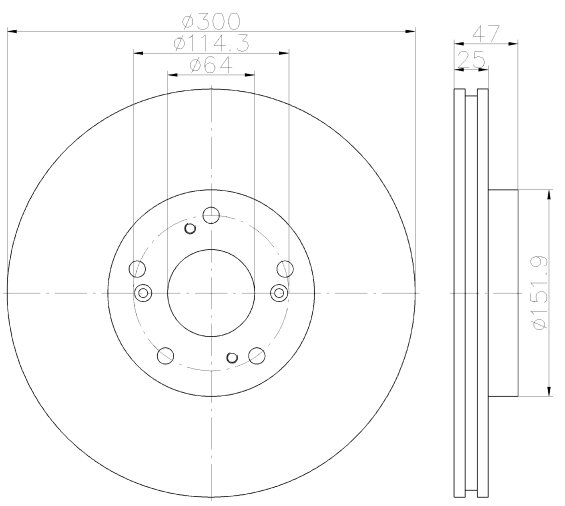

92178003

18 PRO

JAGUAR

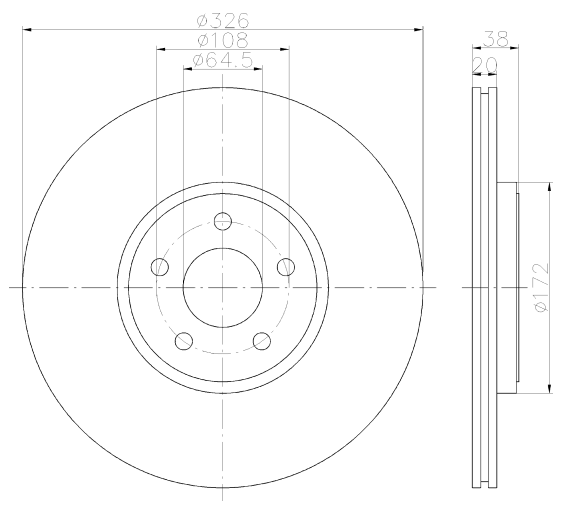

92178103

30 PRO

VOLVO

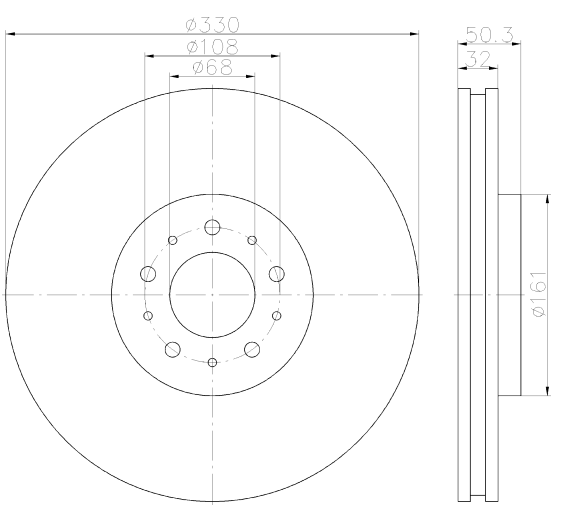

92178203

25 PRO

VOLVO

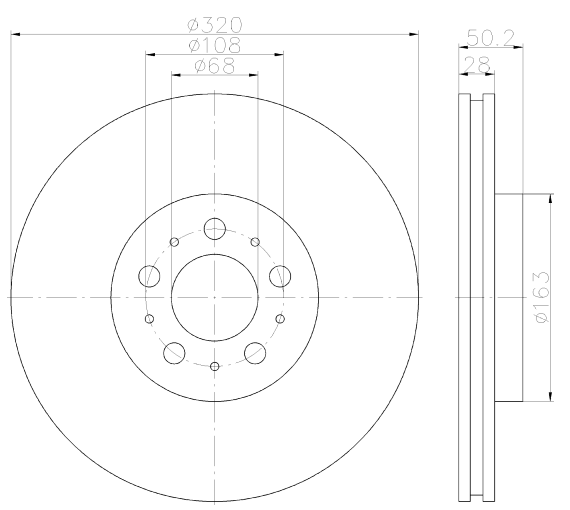

92178303

26 PRO

VOLVO

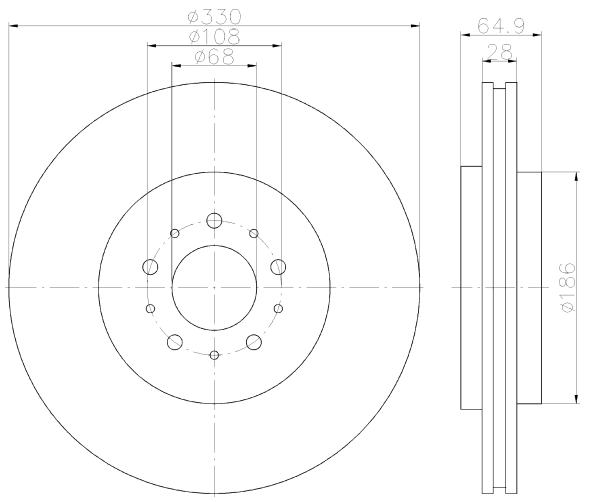

92178403

27 PRO

LAND ROVER

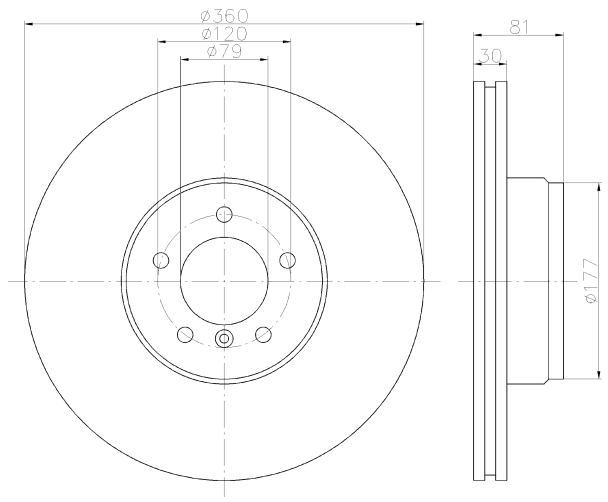

92178703

28.4 PRO

MITSUBISHI

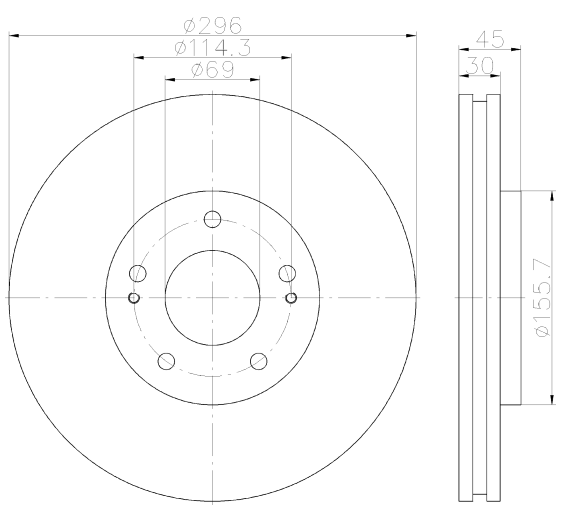

92179003

24 PRO

NISSAN

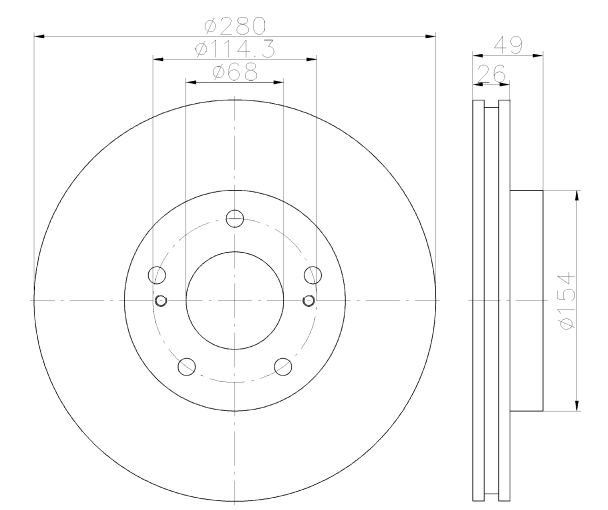

92179103

15 PRO

SUZUKI

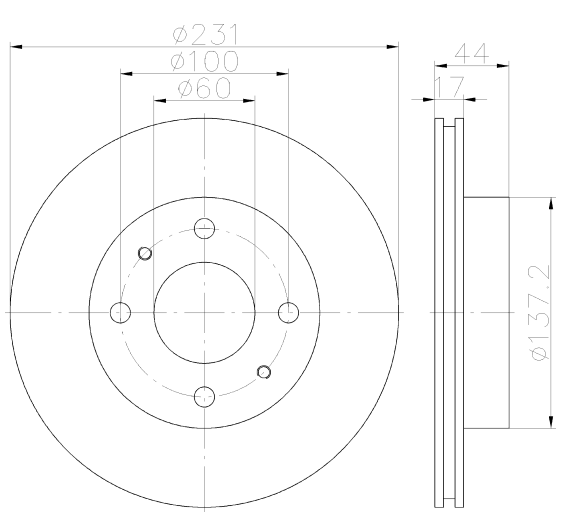

92179503

20 PRO

TOYOTA

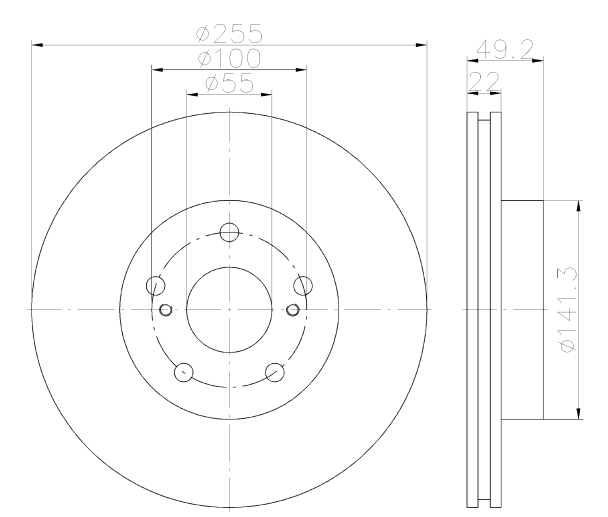

92179703

30.5 PRO

TOYOTA

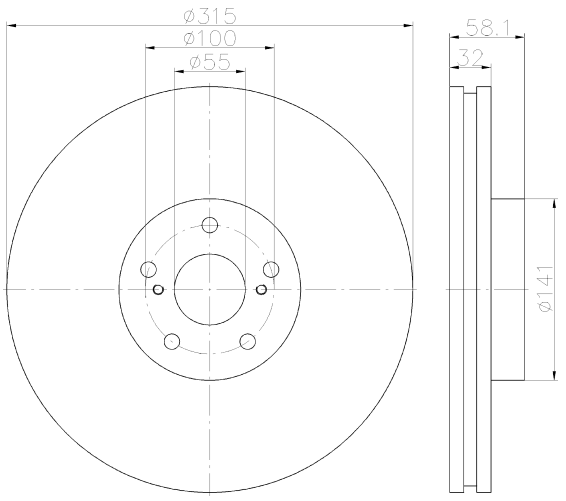

92179803

8.5 PRO

LEXUS, TOYOTA

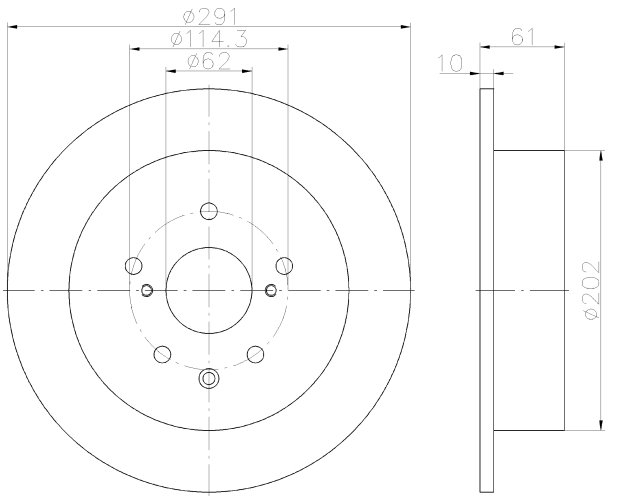

92180003

26.4 PRO

HYUNDAI

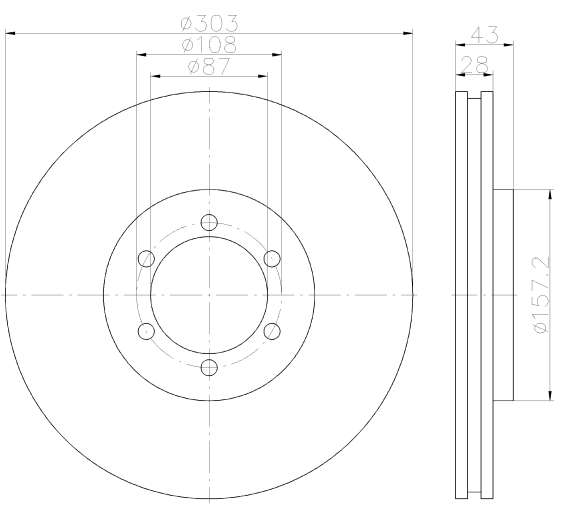

92180203

26.4 PRO

MITSUBISHI

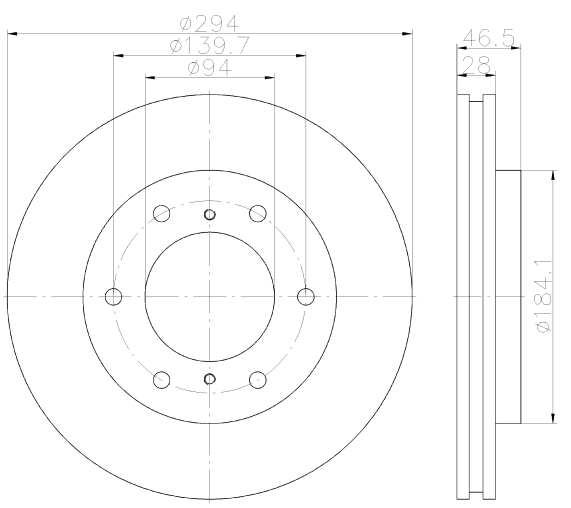

92180303

23 PRO

TOYOTA

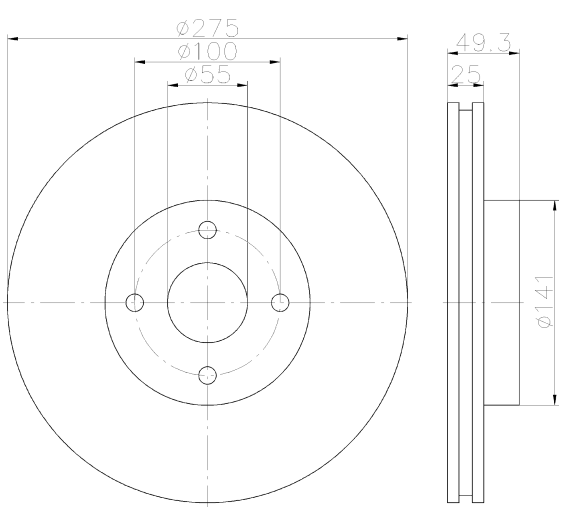

92180703

23 PRO

MAZDA

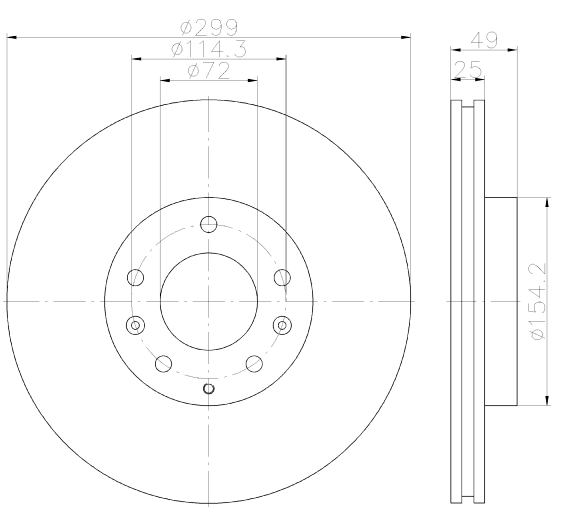

92180803

26 PRO

MAZDA

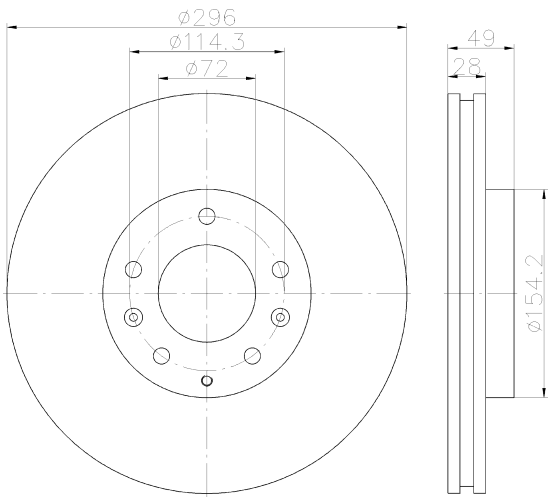

92180903

16 PRO

MAZDA

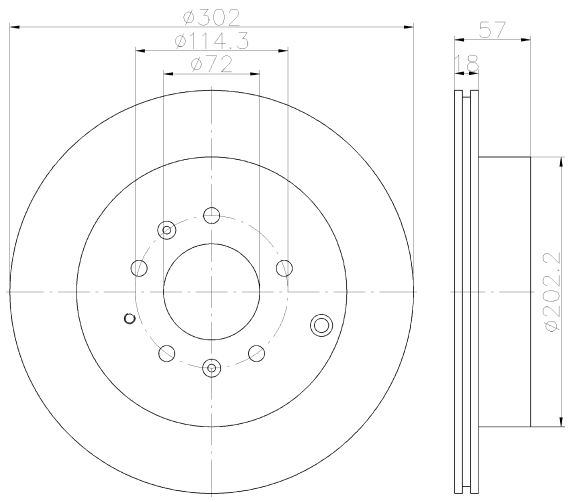

92181003

10.5 PRO

DODGE, FIAT, VOLKSWAGEN

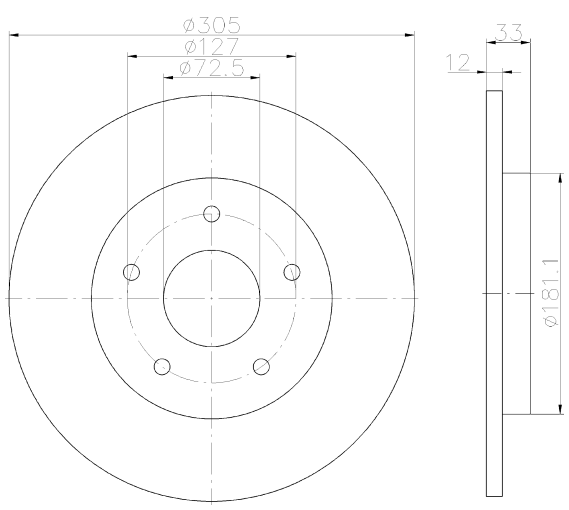

92181203

10 PRO

RENAULT

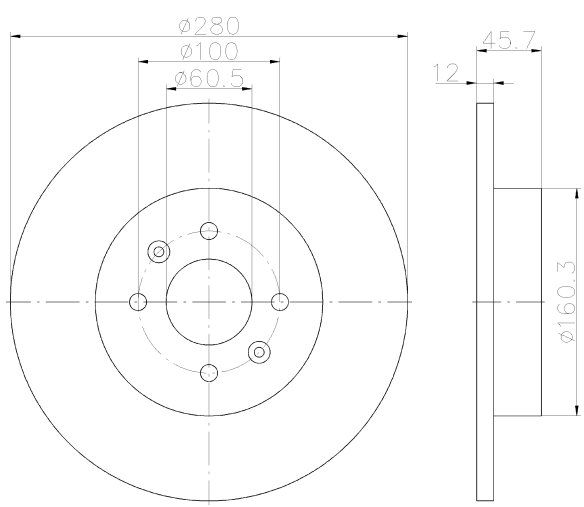

92181403

8 PRO

MAZDA

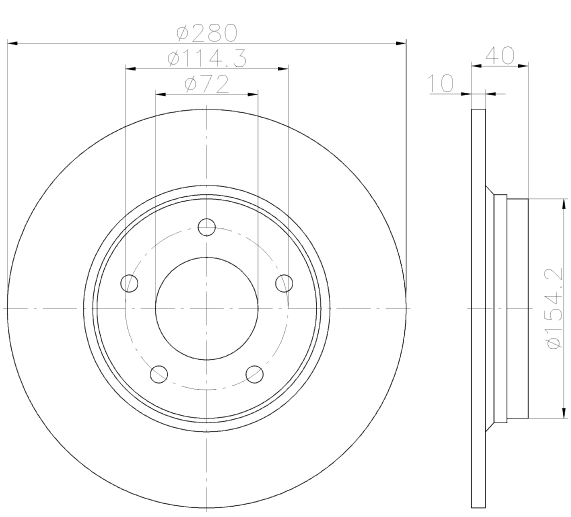

92181503

26.4 PRO

CHRYSLER, DODGE, FIAT

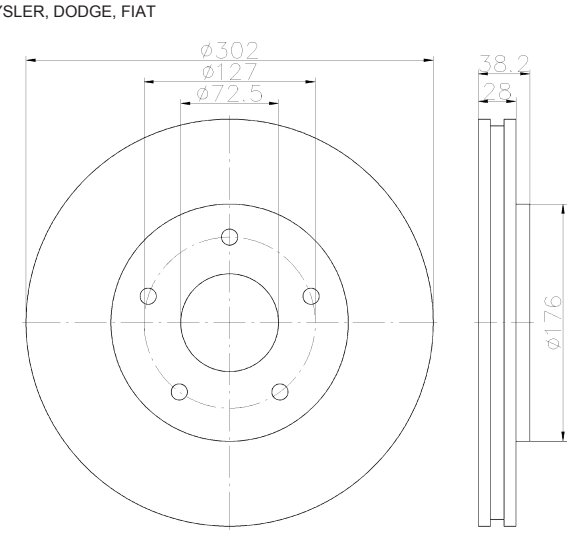

92181603

16 PRO

NISSAN

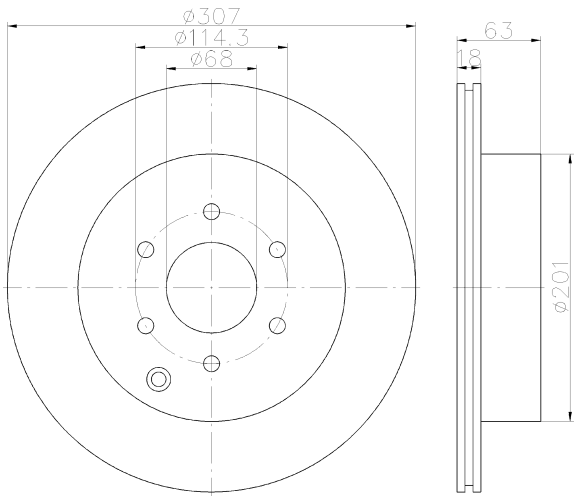

92181903

30 PRO

CHRYSLER, MERCEDES-BENZ

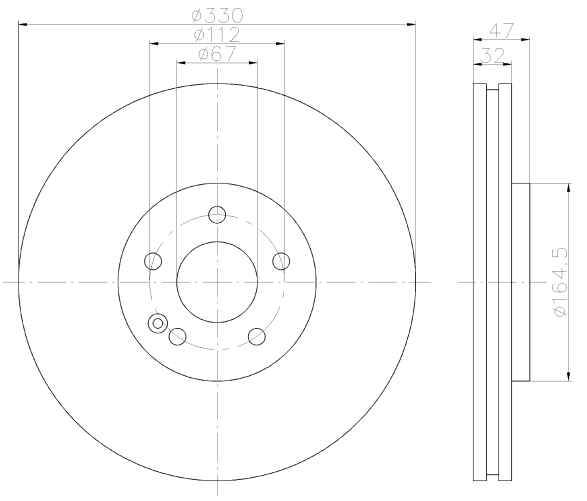

92182403

34.4 PRO

BMW

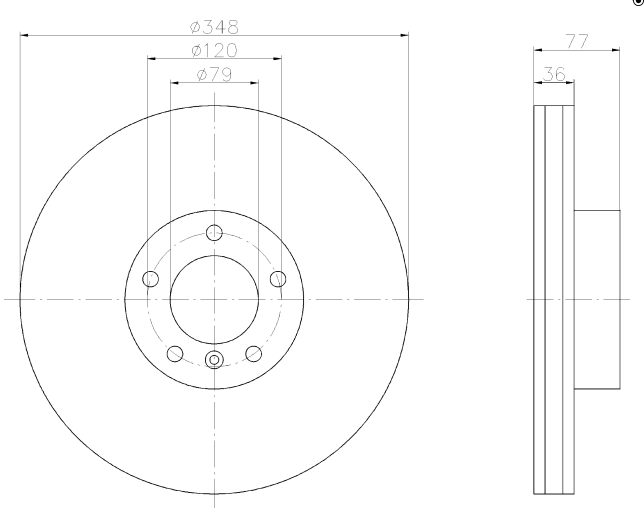

92182503

22.4 PRO

BMW, BMW (BRILLIANCE)

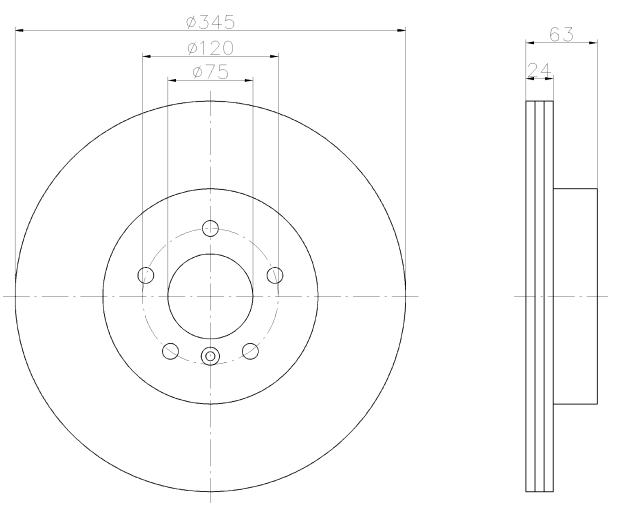

92183503

20.4 PRO

MINI

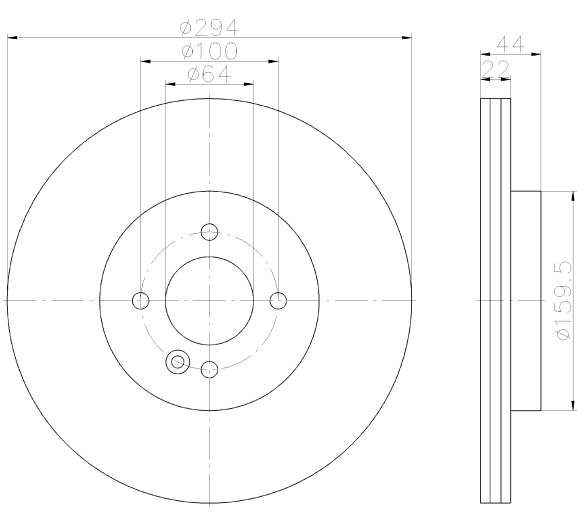

92183603

20.4 PRO

MINI

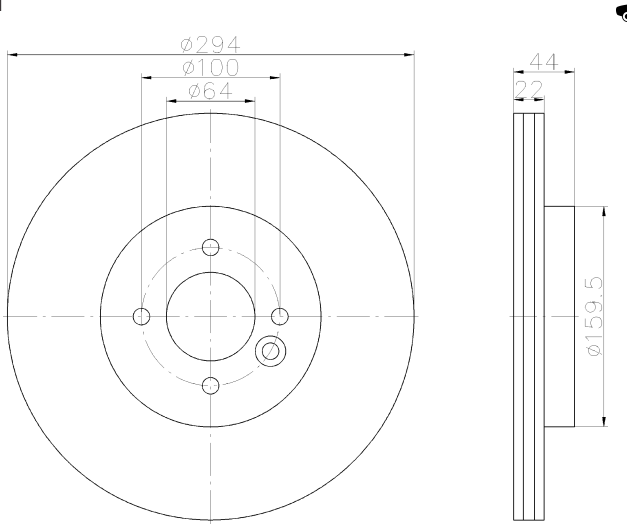

92184203

33.5 PRO

AUDI

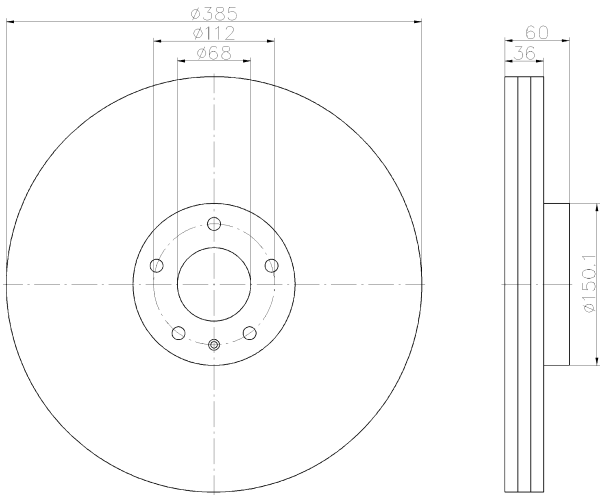

92184303

20 PRO

JEEP

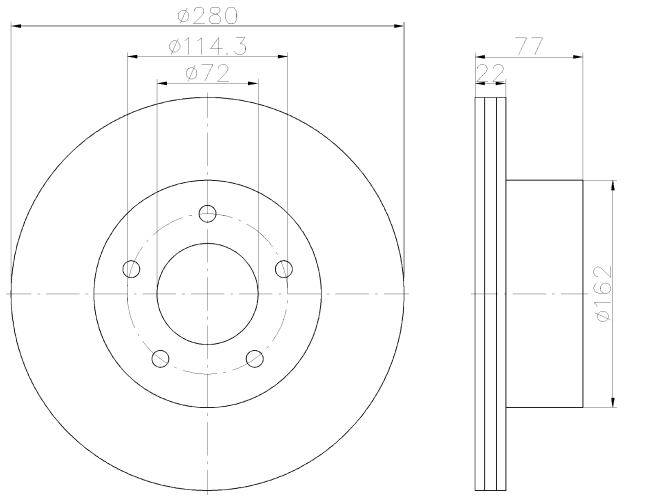

92184403

24.5 PRO

CHRYSLER, DODGE, JEEP

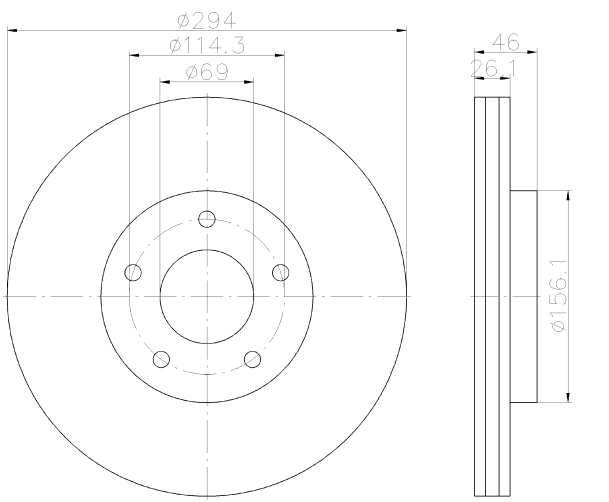

92184503

28.5 PRO

JEEP

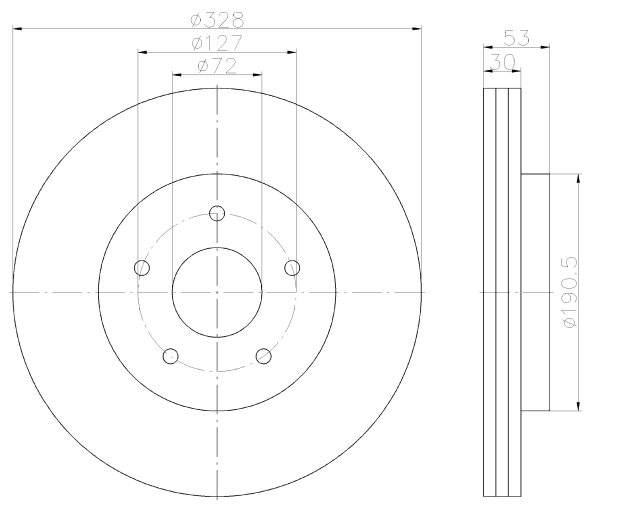

92184603

16 PRO

DAIHATSU

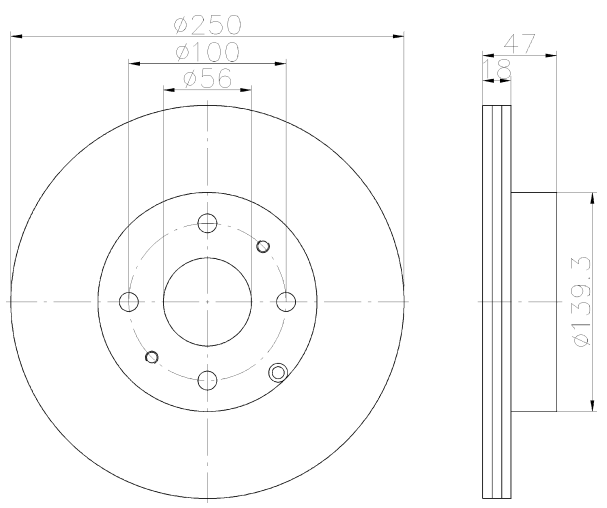

92184803

26 PRO

ACURA, HONDA

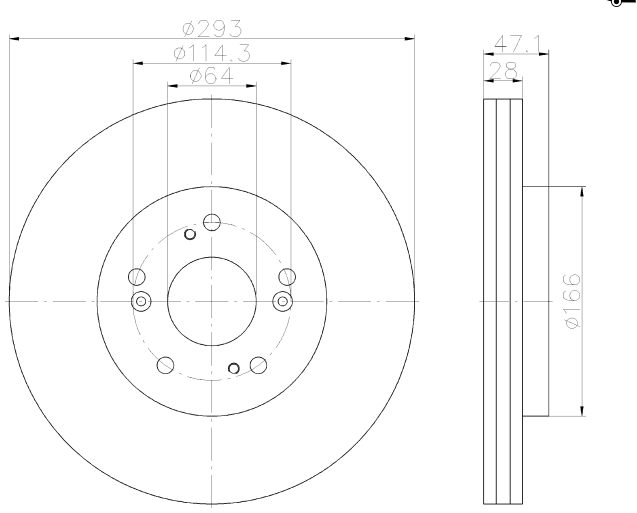

92184903

26 PRO

DAIMLER, JAGUAR

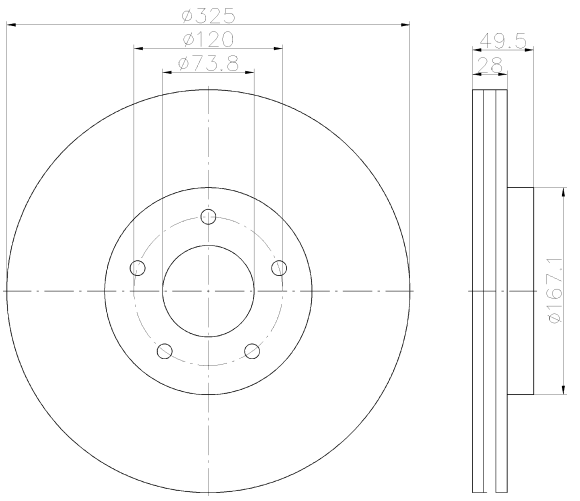

92185103

27 PRO

LAND ROVER

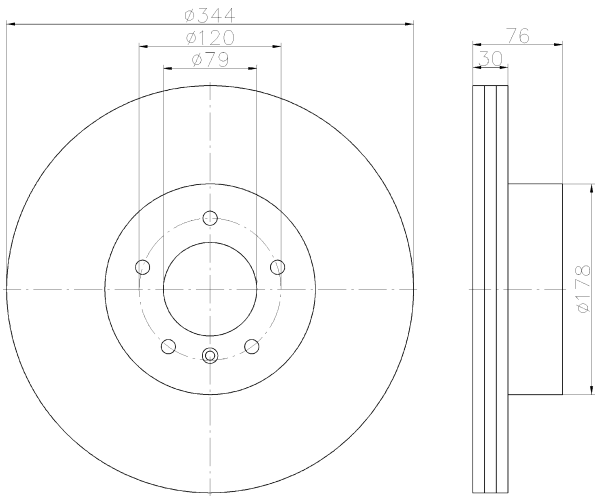

92185403

26 PRO

LEXUS

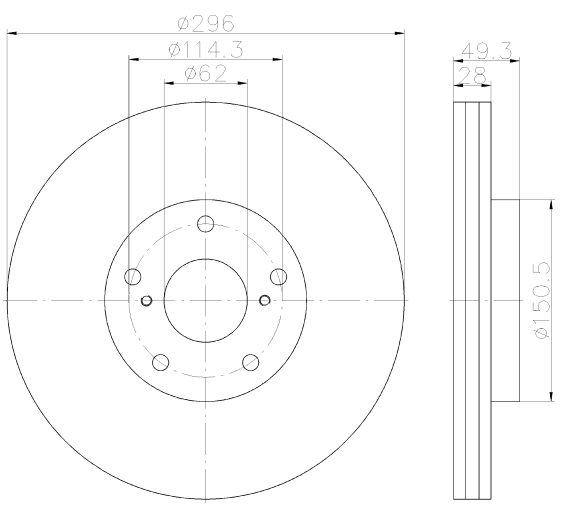

92185803

9 PRO

KIA

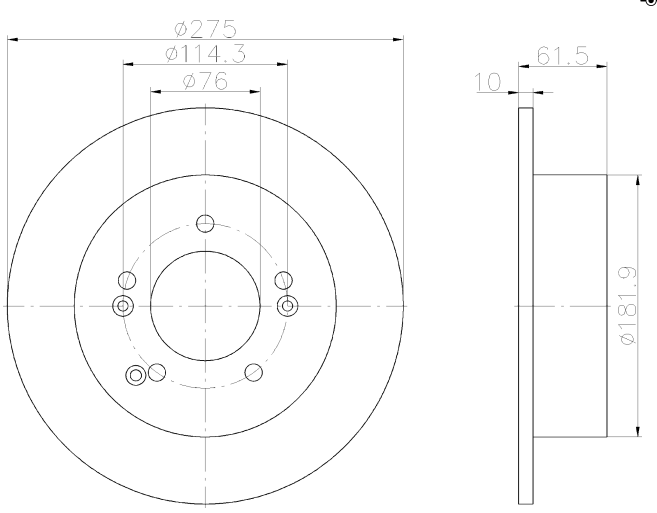

92186103

24 PRO

NISSAN

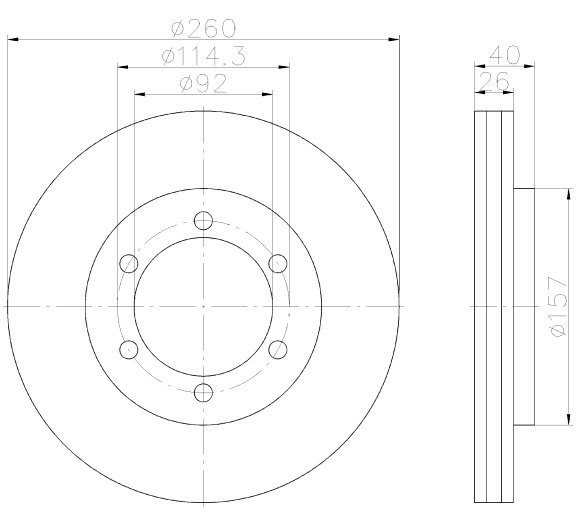

92186303

30 PRO

JAGUAR

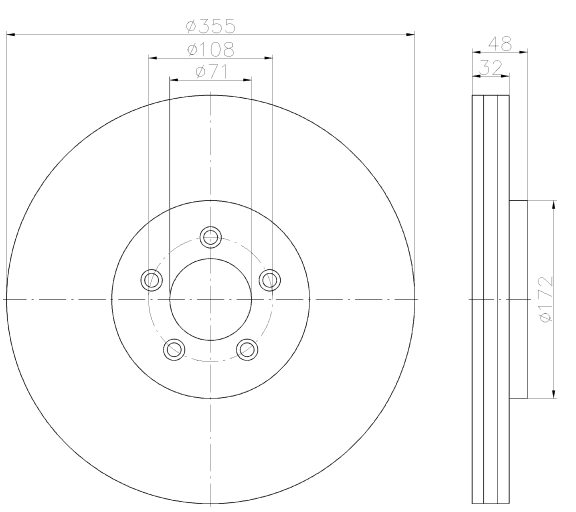

92186403

8 PRO

OPEL, VAUXHALL

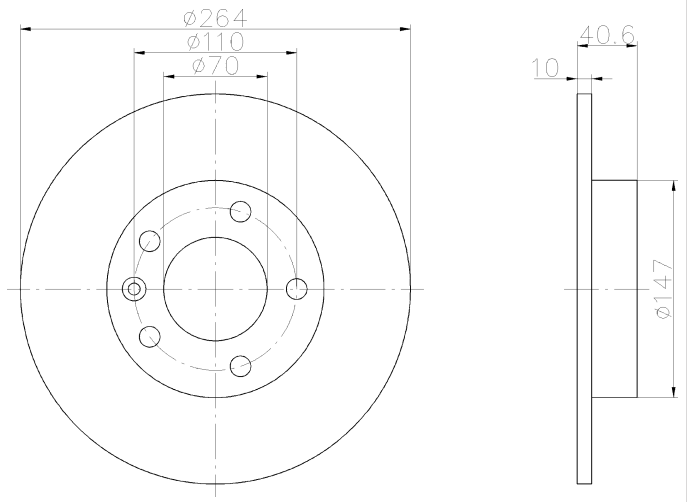

92186903

27 PRO

CHEVROLET, HOLDEN, OPEL, SAAB, VAUXHALL

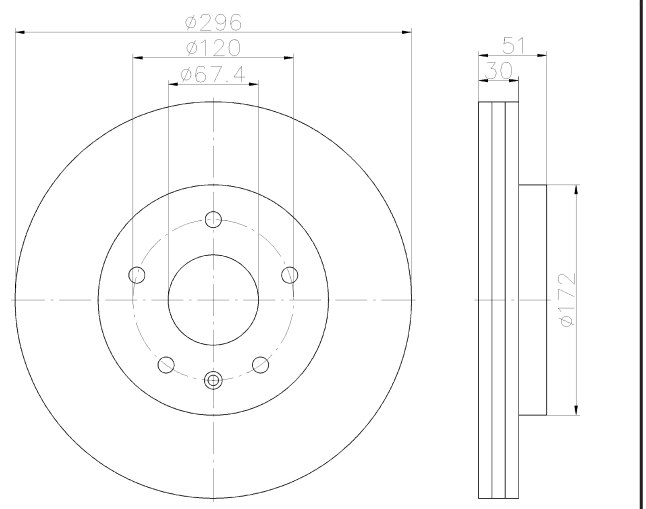

92187003

27 PRO

BUICK, CHEVROLET, HOLDEN, OPEL, SAAB, VAUXHALL

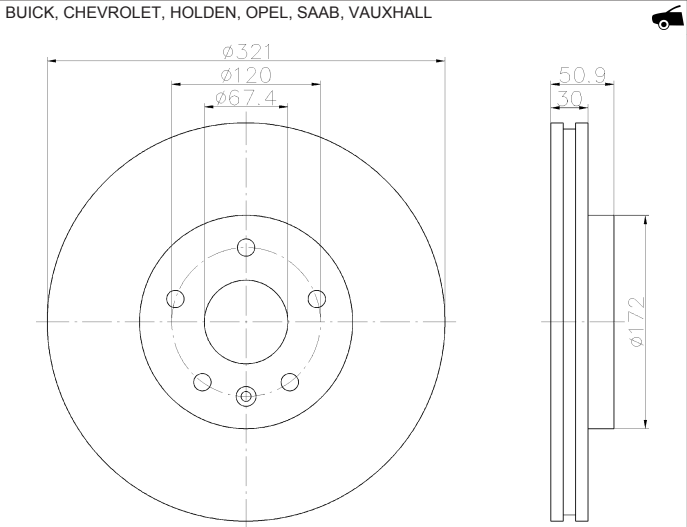

92187103

27 PRO

OPEL, SAAB, VAUXHALL

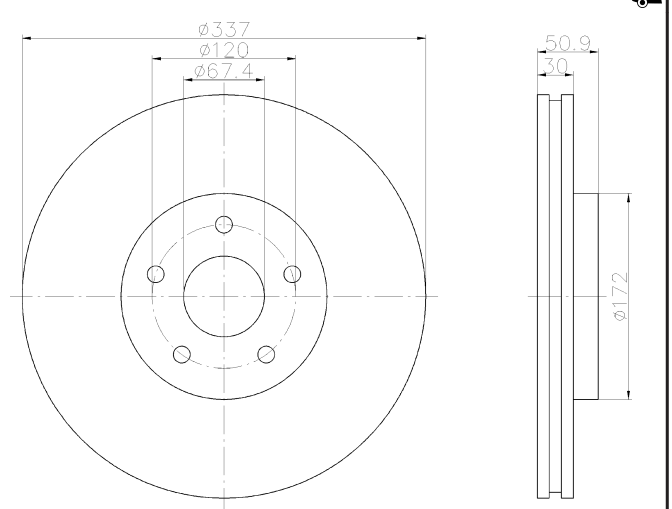

92187303

21.5 PRO

OPEL, SAAB, VAUXHALL

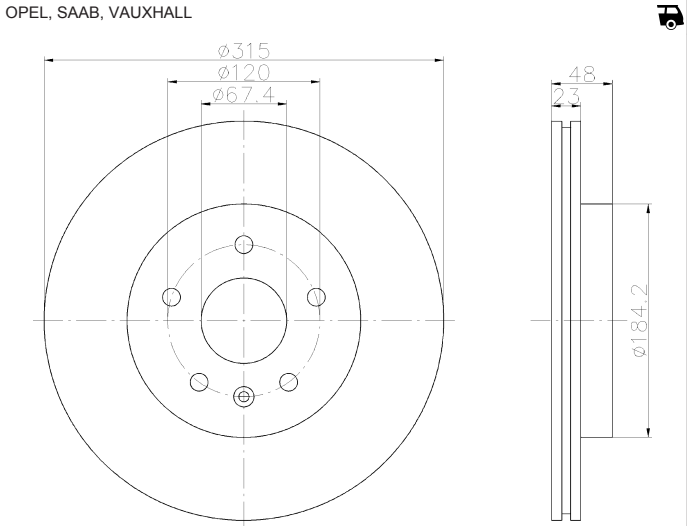

92188303

8 PRO

MAZDA

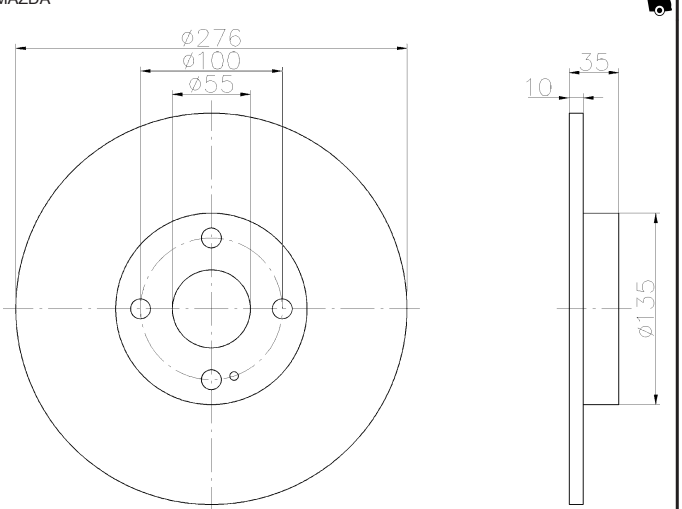

92194003

11 PRO

JEEP

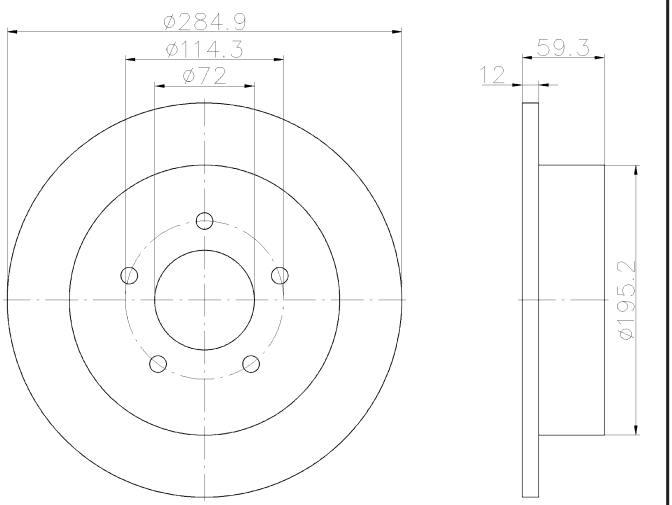

92194100

8

CITROËN, PEUGEOT

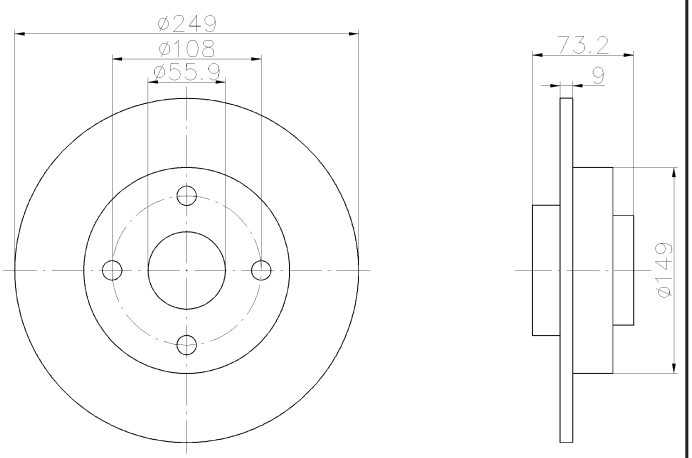

92194203

28.4 PRO

NISSAN

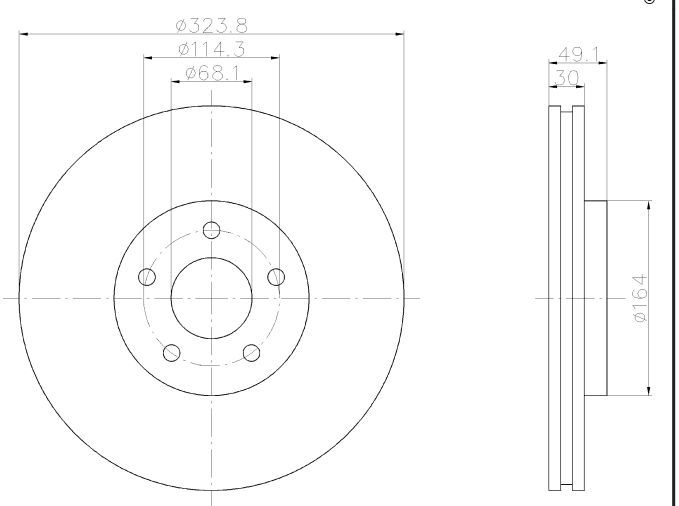

92194303

28 PRO

SUBARU

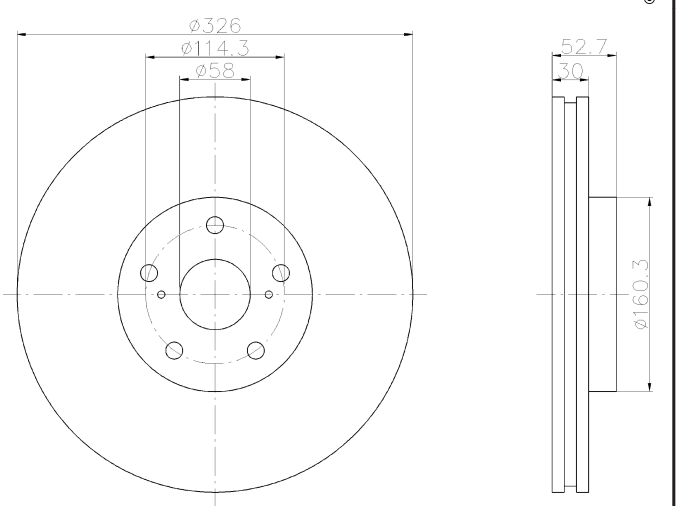

92194703

24.6 PRO

HOLDEN

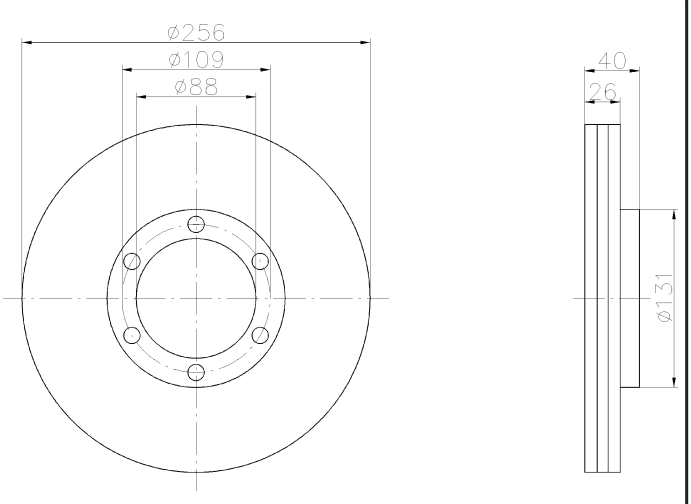

92194900

30

HONDA

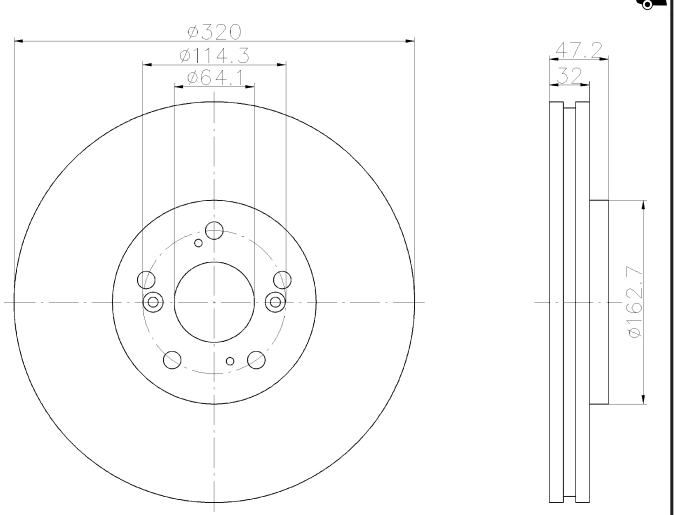

92195000

23

HONDA

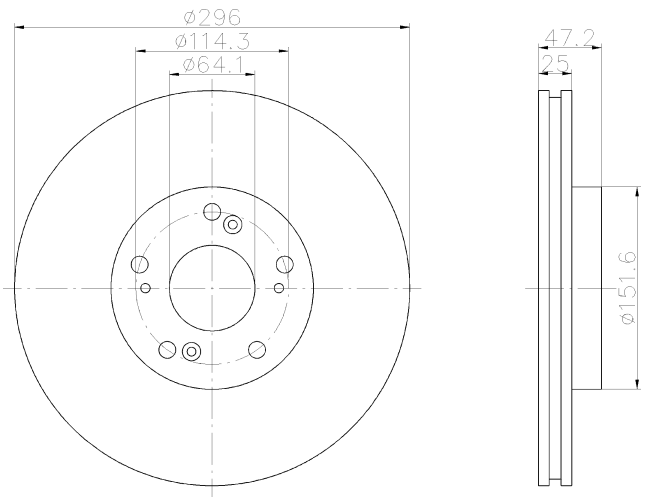

92195100

8

HONDA

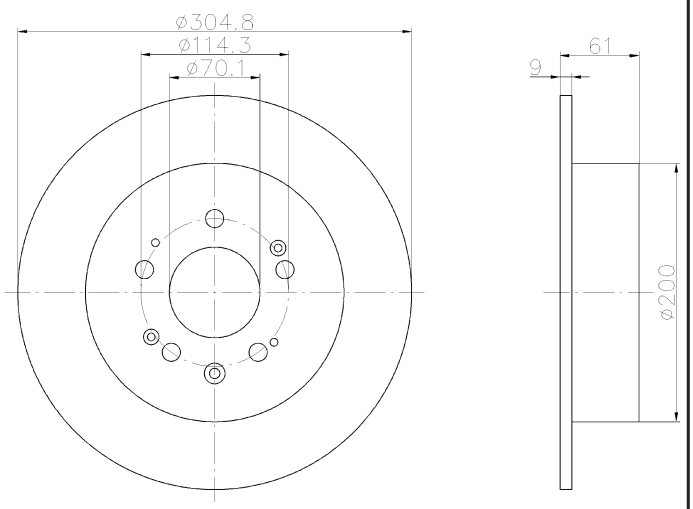

92195200

9

TOYOTA

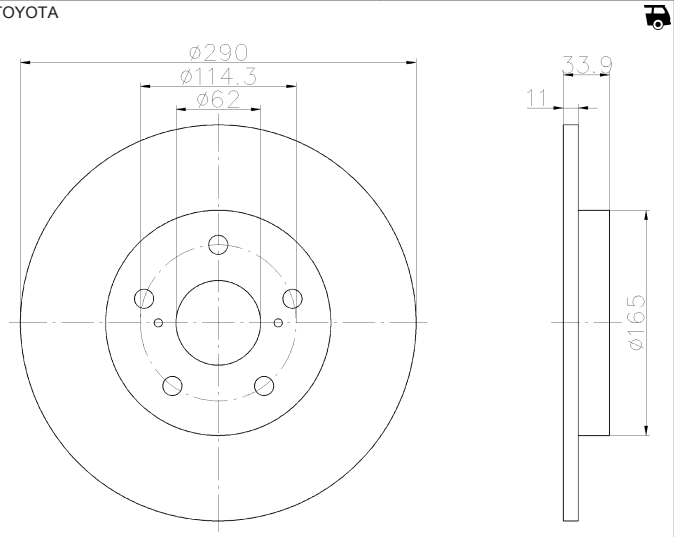

92195300

23

TOYOTA

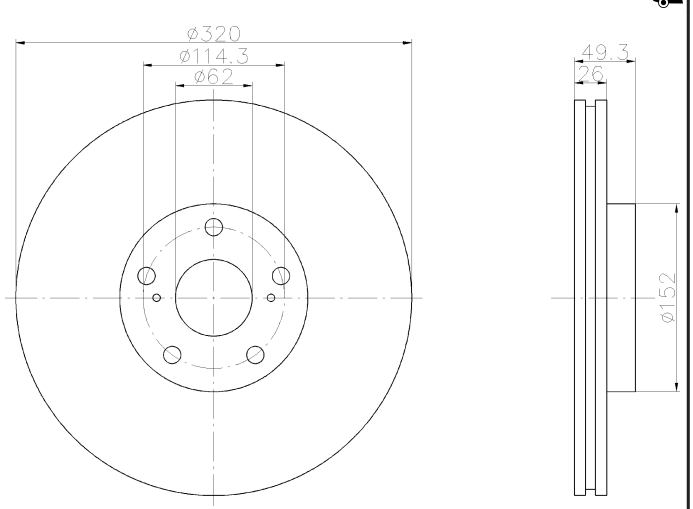

92195403

25.4 PRO

RENAULT

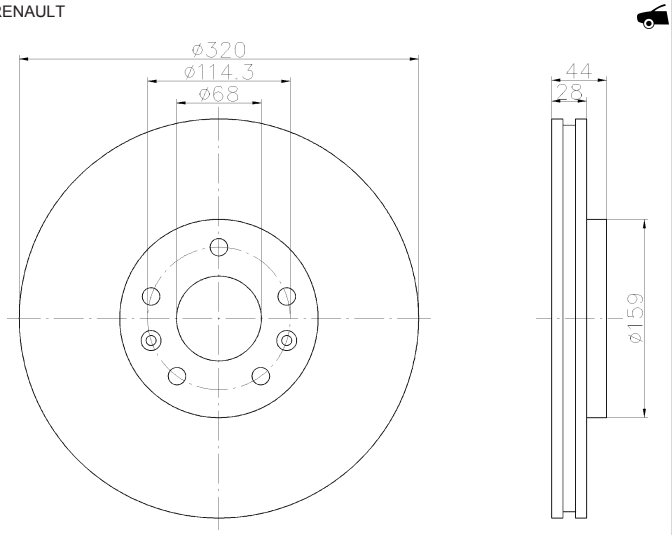

92195503

21.8 PRO

RENAULT

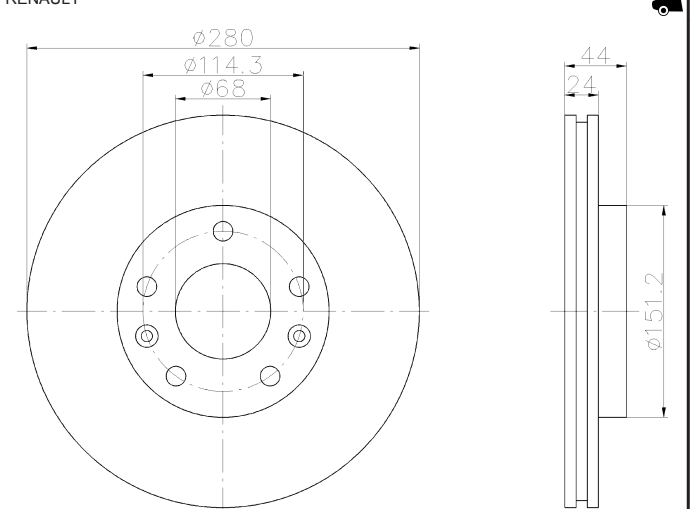

92195603

23.4 PRO

RENAULT

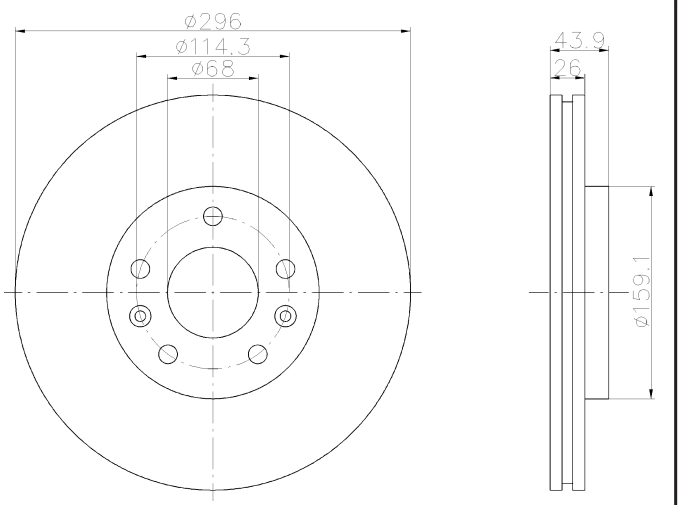

92195803

10 PRO

PEUGEOT

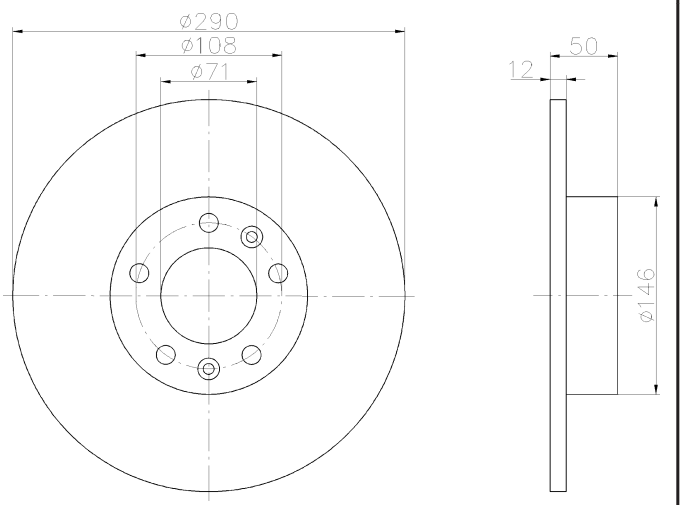

92195900

7 ABS

RENAULT

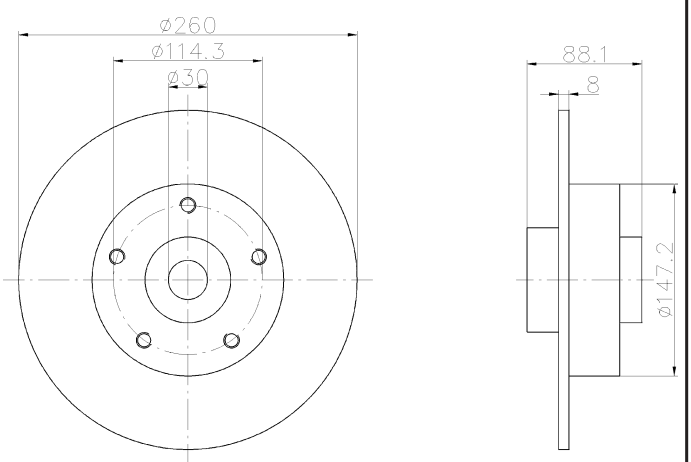

92196000

7 ABS

RENAULT

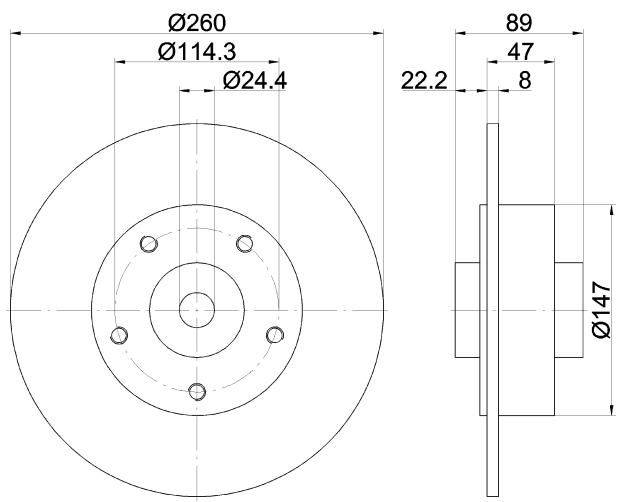

92196303

28 PRO

VOLVO

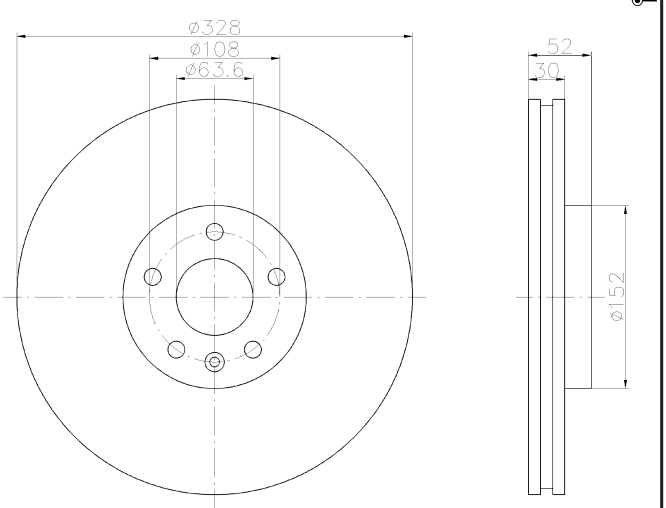

92196403

20 PRO

VOLVO

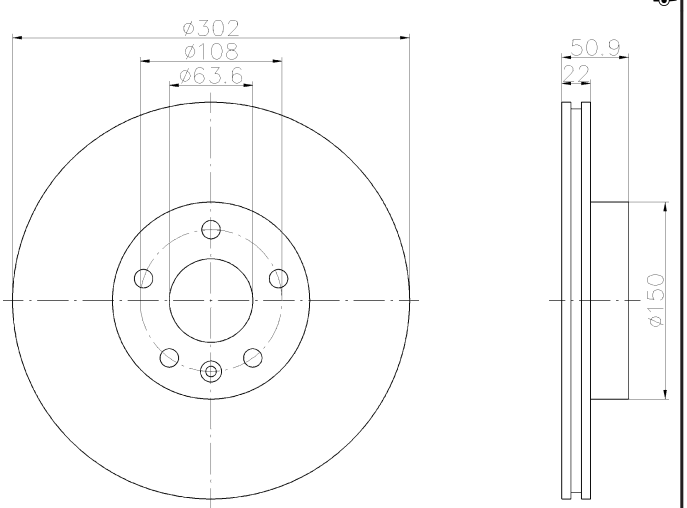

92196500

16

HYUNDAI, KIA

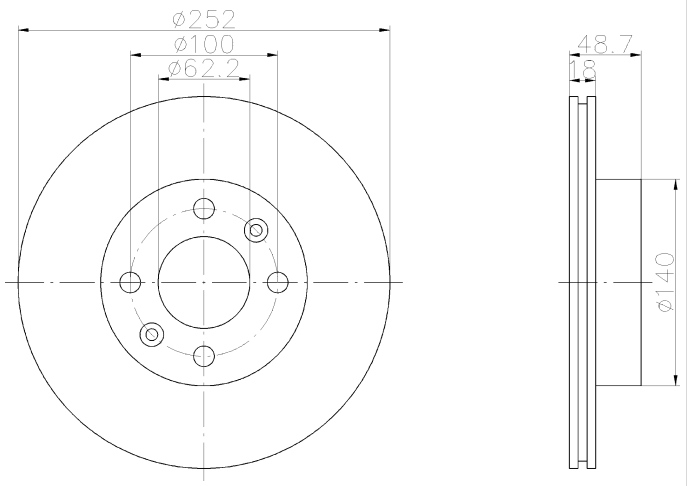

92196703

PRO

20.4

MINI

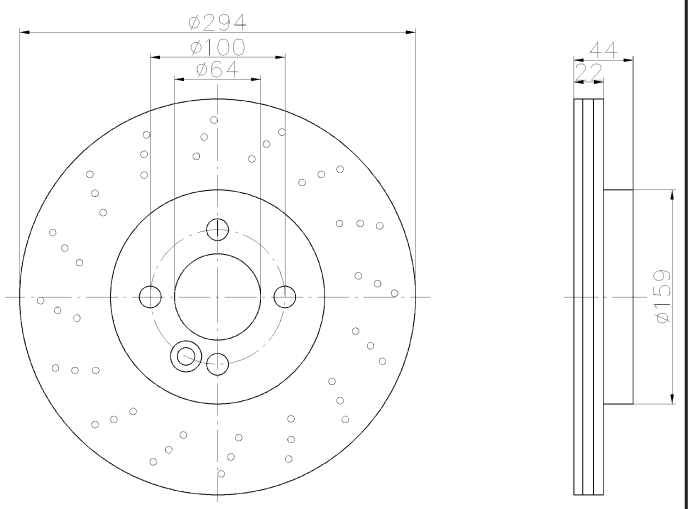

92196803

PRO

22

RENAULT

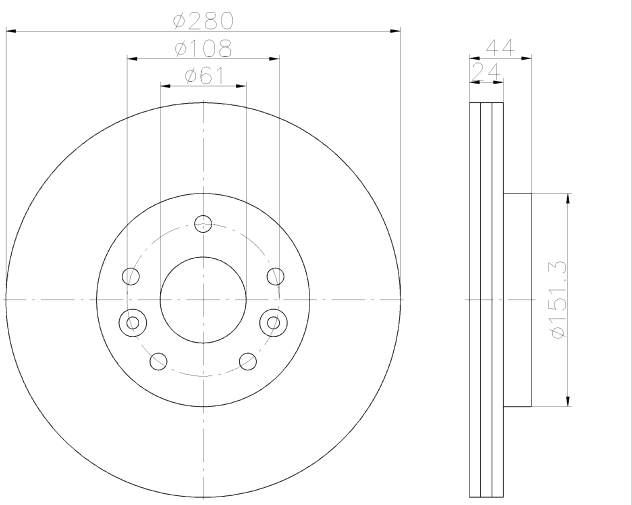

92196903

PRO

26

FORD, FORD AUSTRALIA

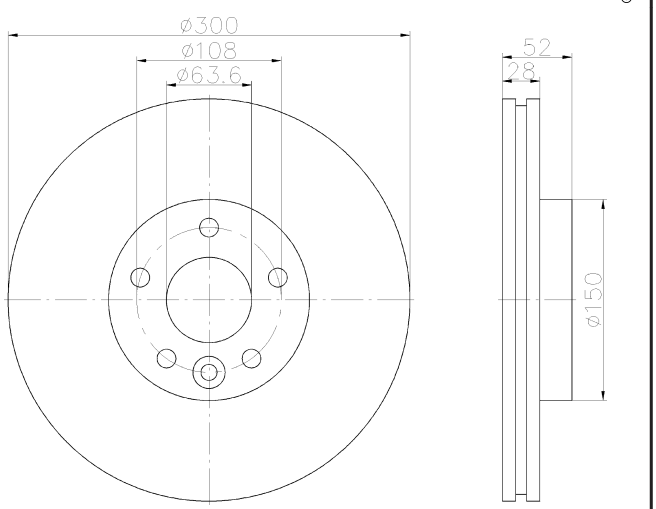

92197103

PRO

20

CITROËN

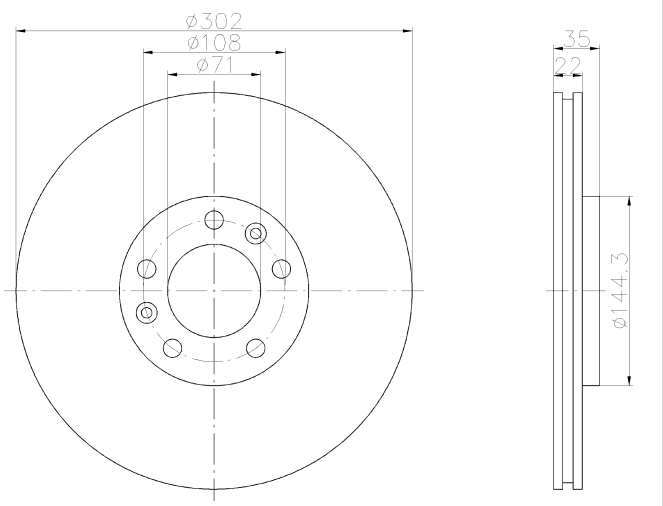

92197403

PRO

24

MITSUBISHI

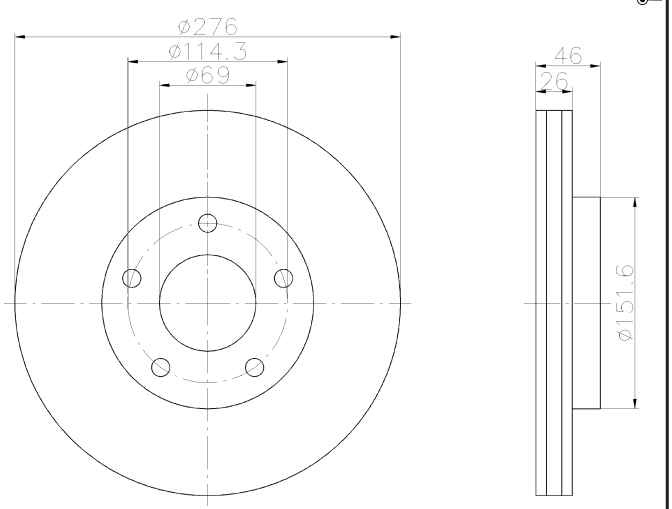

Illustrations

92197703

24 PRO

FORD, FORD AUSTRALIA, FORD USA, MAZDA

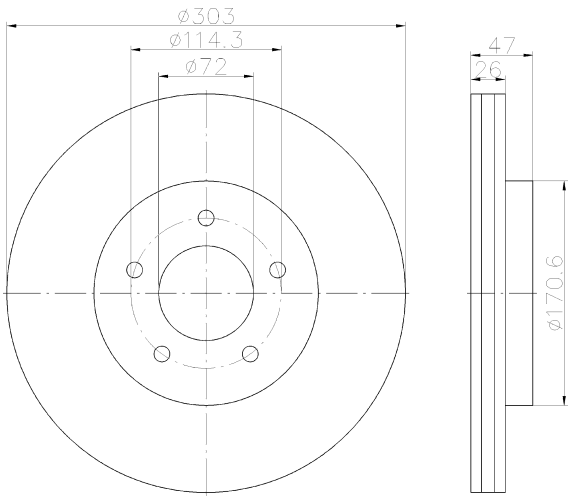

92197803

11 PRO

FORD, FORD AUSTRALIA, FORD USA, MAZDA

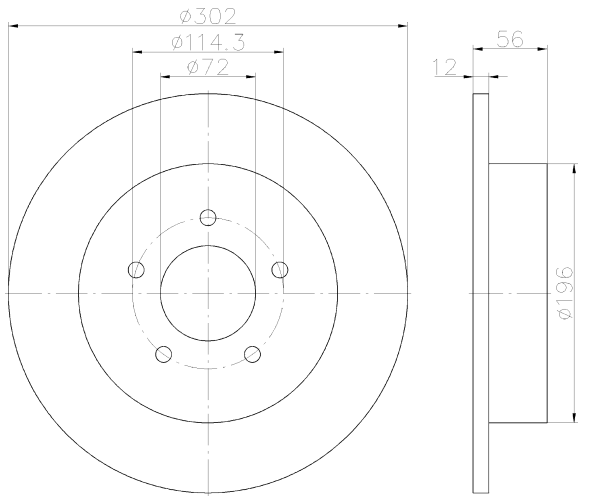

92197903

24 PRO

MERCEDES-BENZ

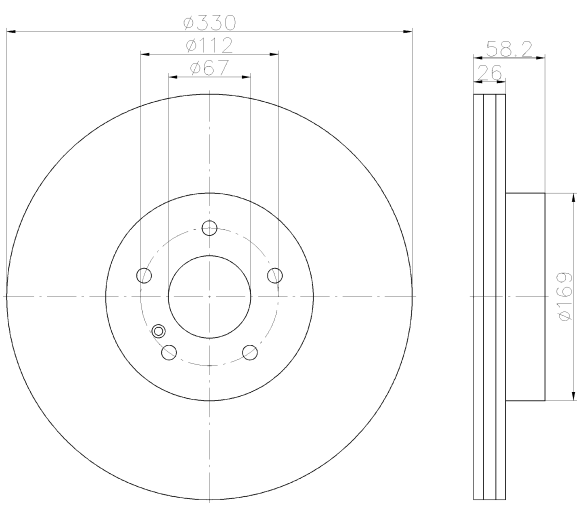

92198003

24 PRO

MERCEDES-BENZ

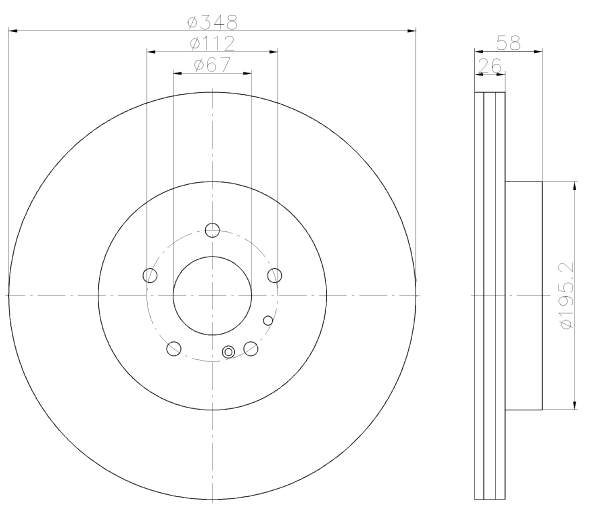

92198103

8.4 PRO

MITSUBISHI

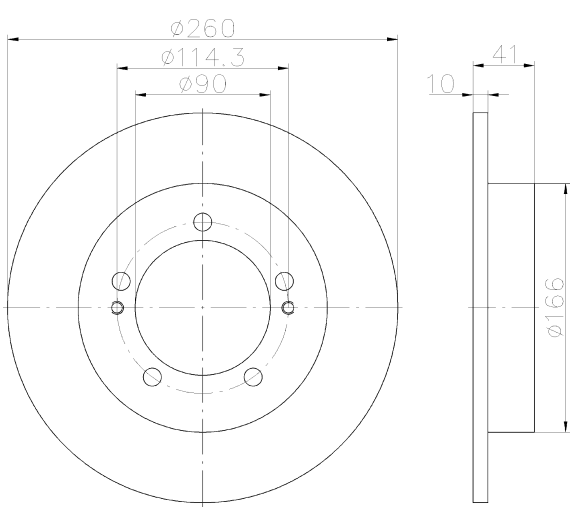

92198203

24.4 PRO

MITSUBISHI

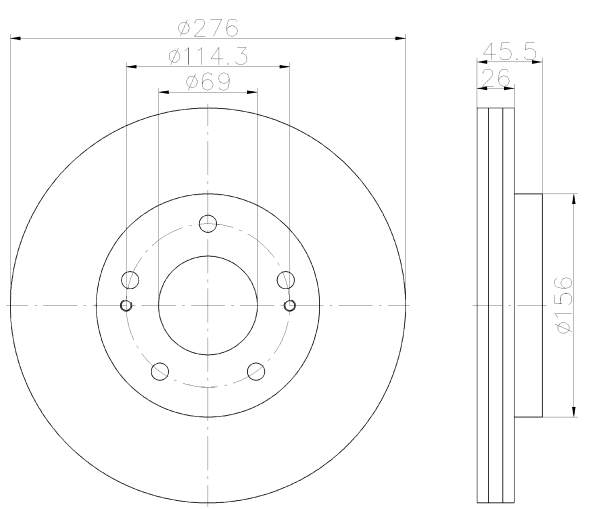

92198503

16 PRO

LEXUS, TOYOTA

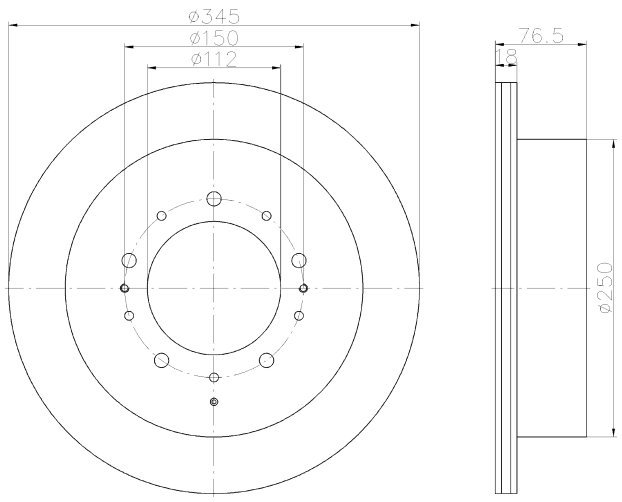

92198703

8.5 PRO

SSANGYONG

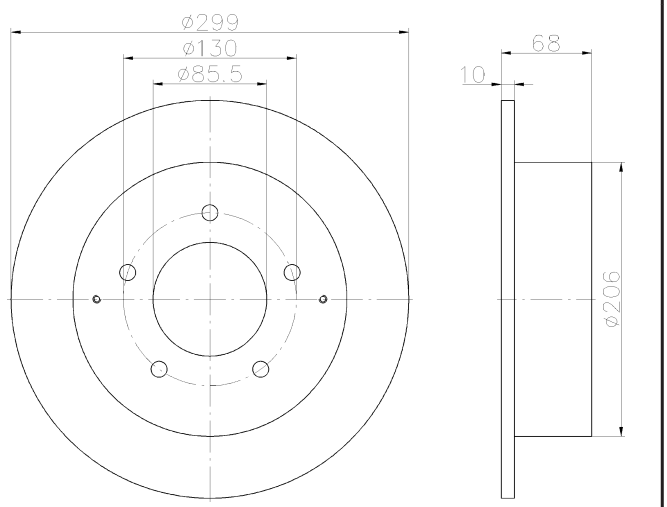

92198903

23 PRO

CHEVROLET, CHEVROLET (SGM), HOLDEN, OPEL, VAUXHALL

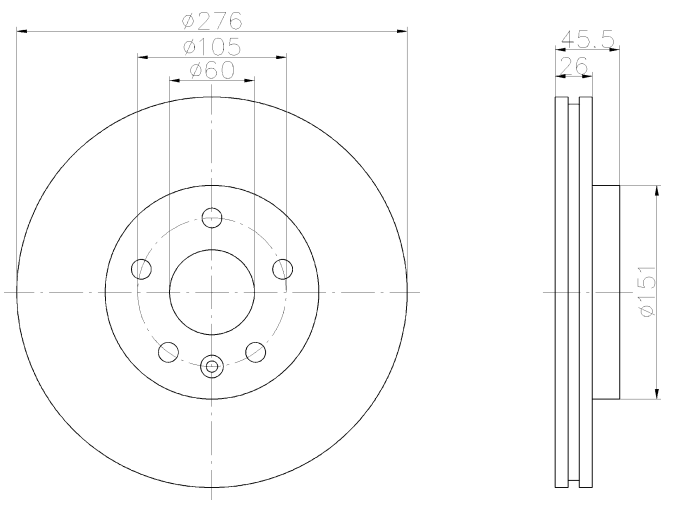

92199203

28 PRO

SUBARU

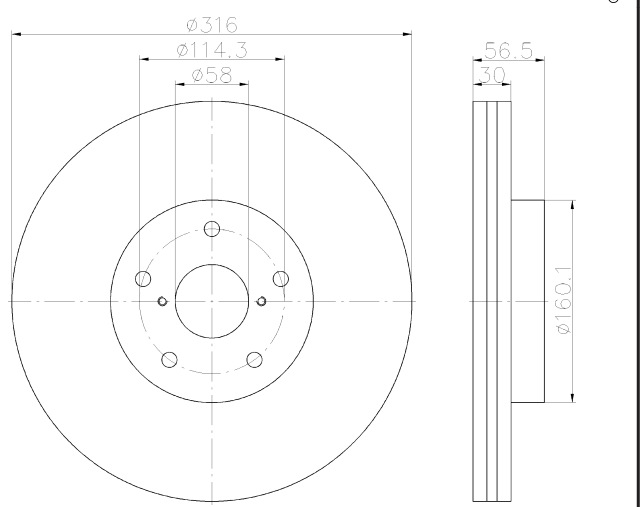

92199300

19

SUBARU, TOYOTA

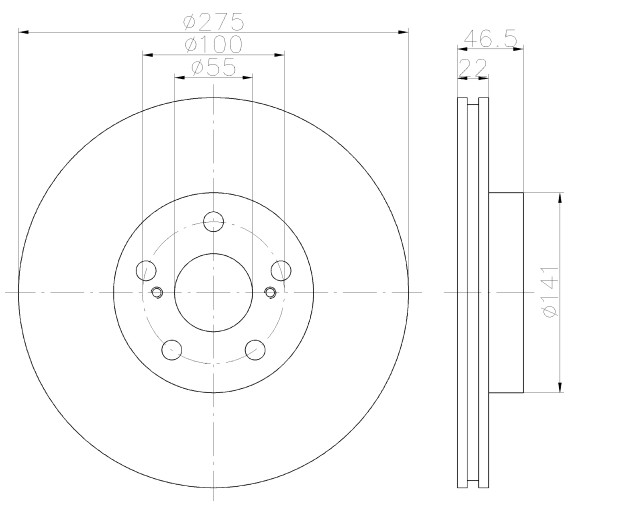

92199600

26

NISSAN

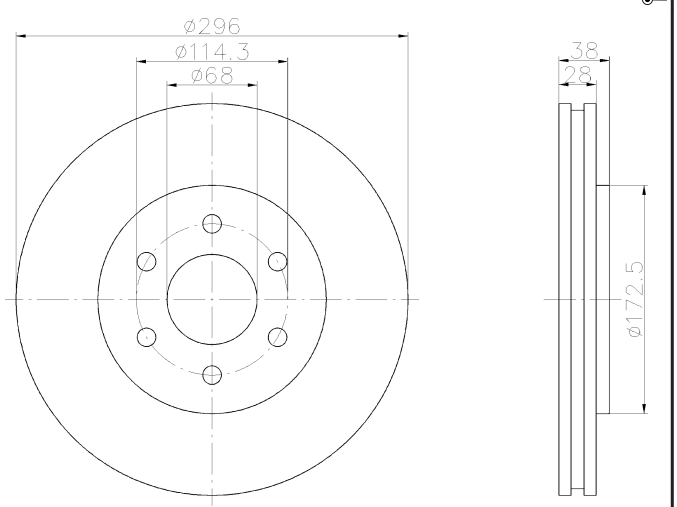

92199603

26 PRO

NISSAN

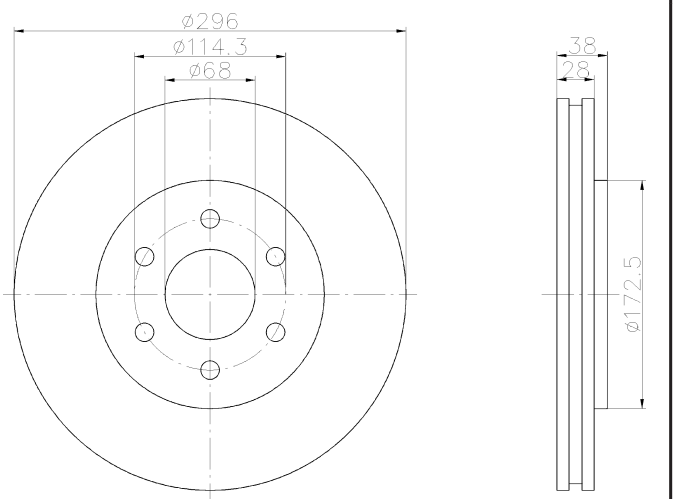

92199703

28 PRO

LEXUS

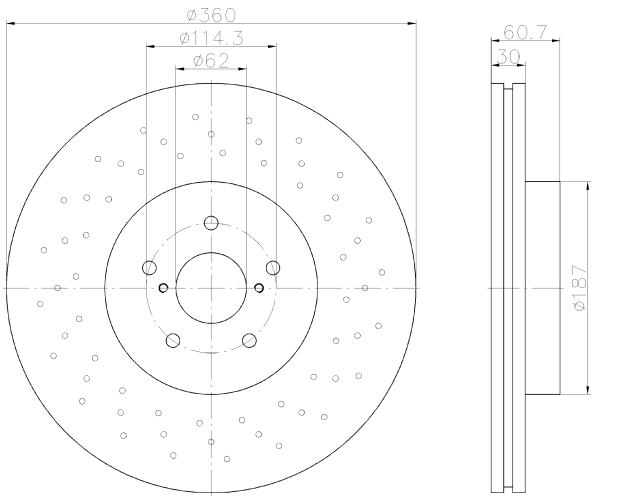

92199800

7.5

TOYOTA

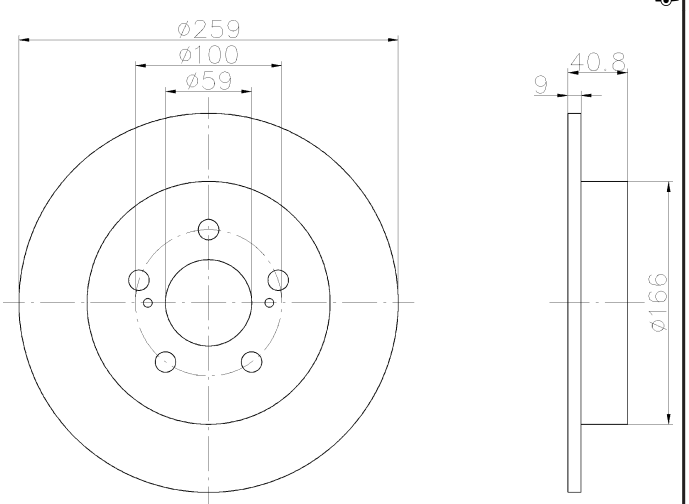

92199900

18

ASTON MARTIN, TOYOTA

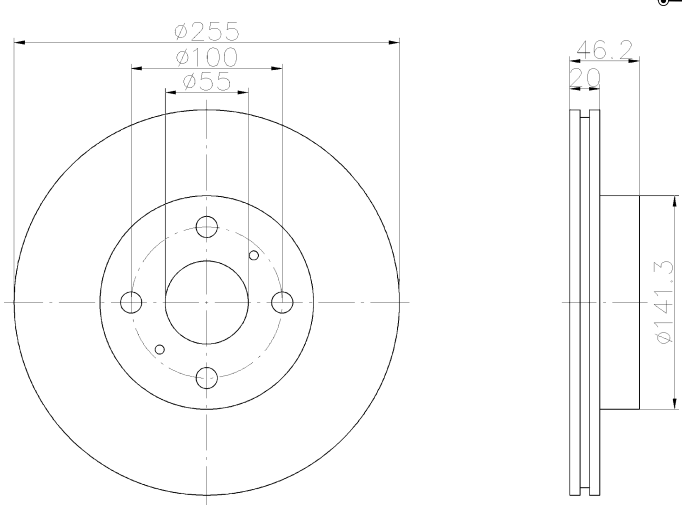

92200000

8.5

SUBARU, TOYOTA

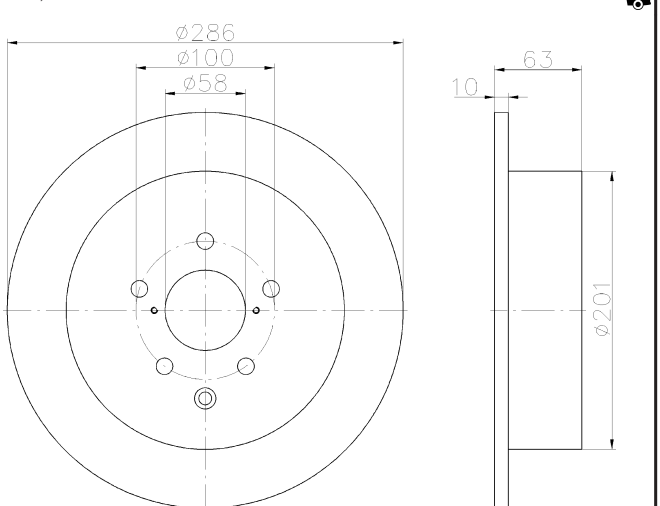

92202003

18.4 PRO

BMW

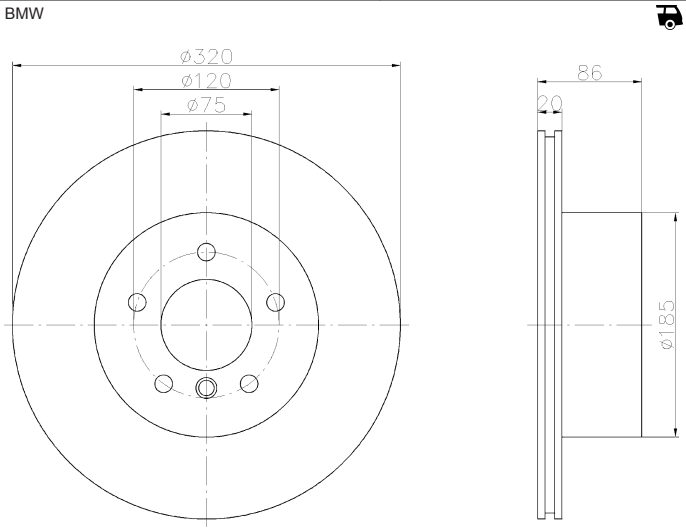

92202100

7.5 ABS

CITROËN, PEUGEOT, PEUGEOT (DF-PSA)

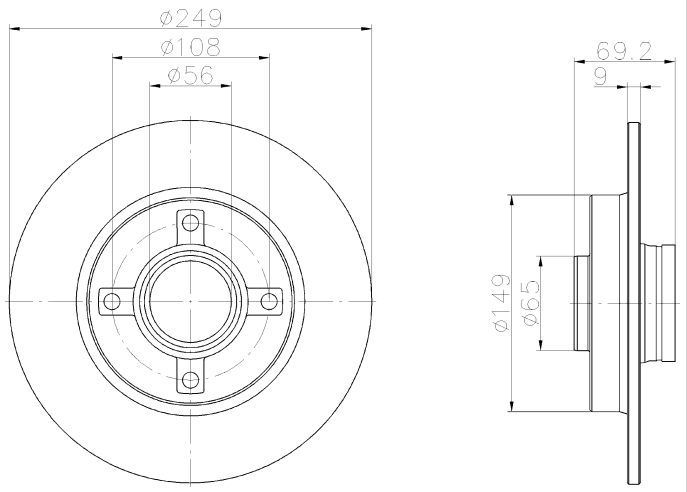

92202303

9 PRO

ALFA ROMEO

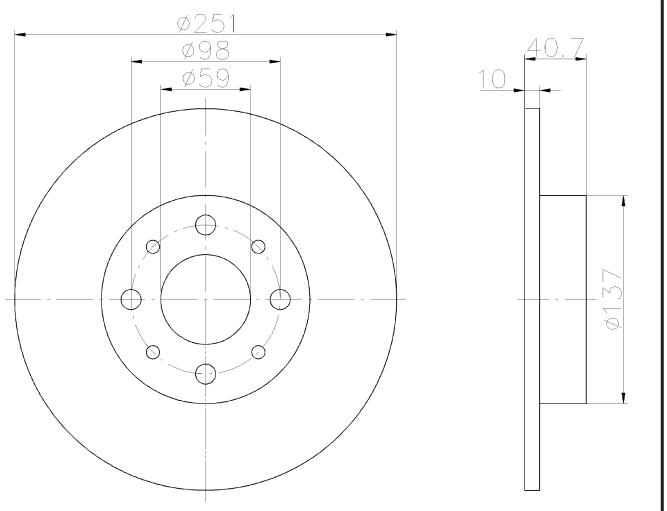

92202400

22

MERCEDES-BENZ, RENAULT

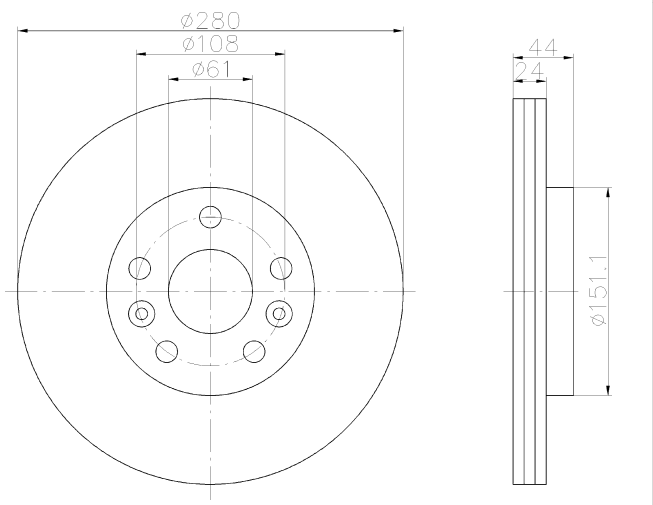

92203003

25.5 PRO

SSANGYONG

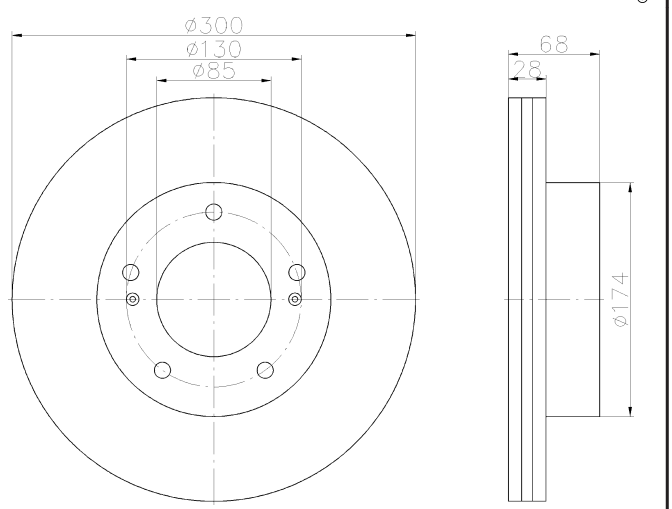

92203203

26 PRO

DAEWOO, SSANGYONG

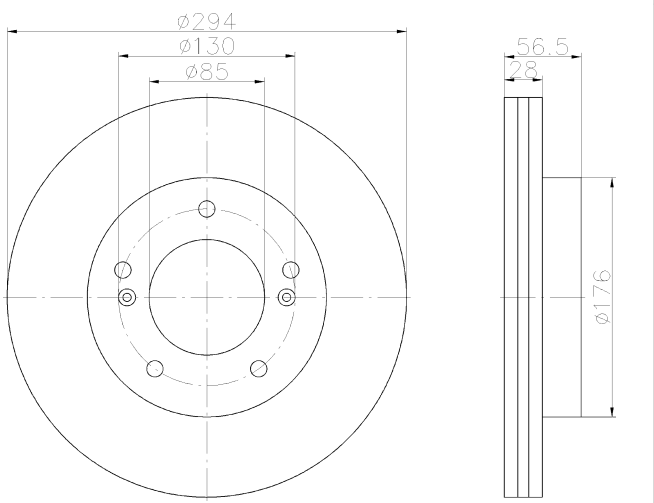

92203303

26.4 PRO

DODGE, JEEP

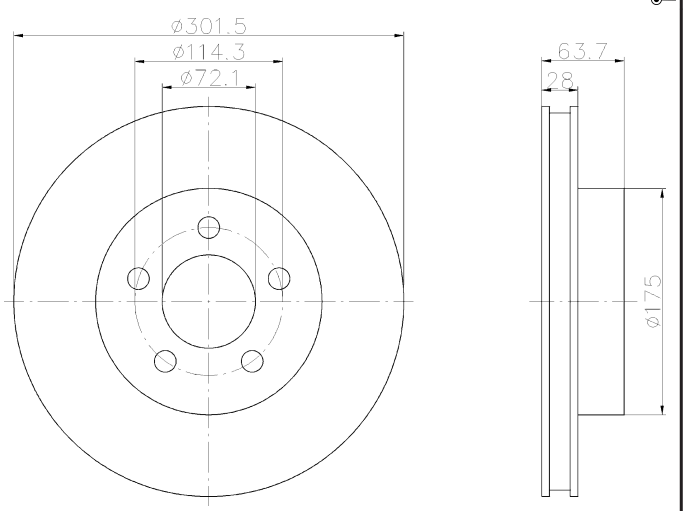

Illustrations

92203403

26 PRO

MAZDA

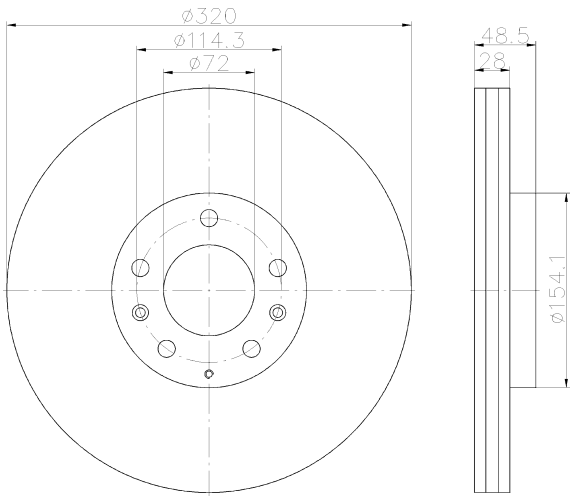

92203800

28

DODGE, HYUNDAI

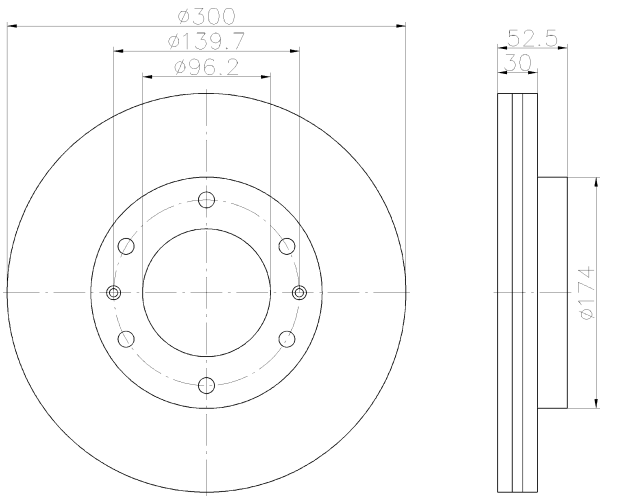

92203900

16.4

DODGE, HYUNDAI

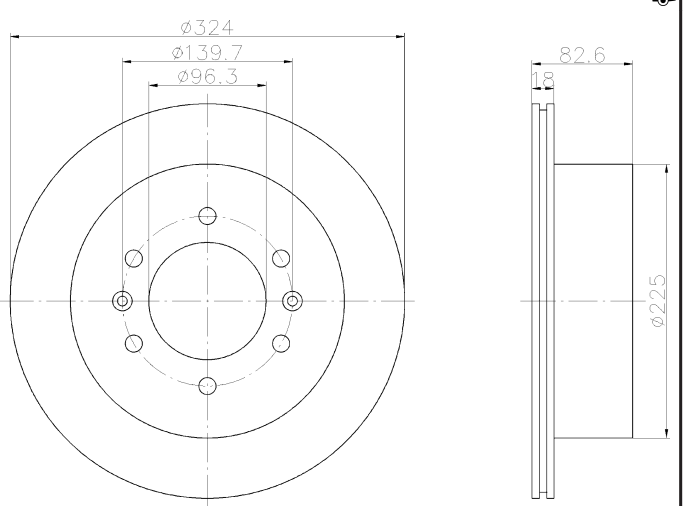

92204000

8

HONDA

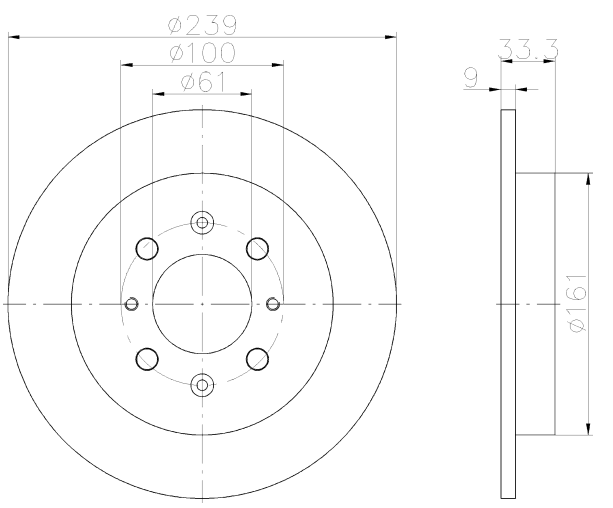

92204100

18

MARUTI SUZUKI, NISSAN, SUZUKI

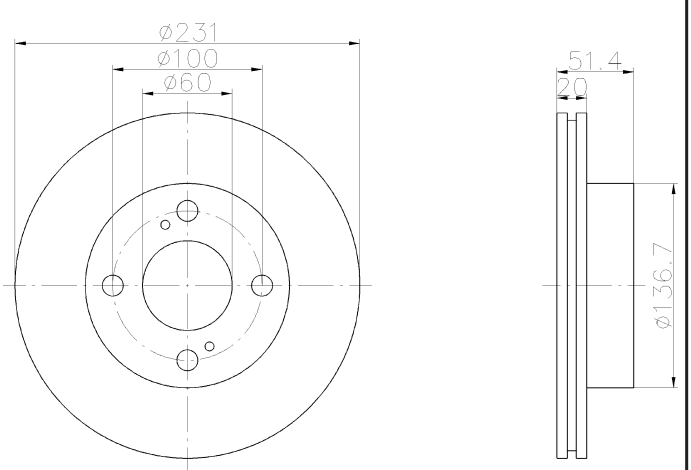

92204203

26 PRO

LEXUS

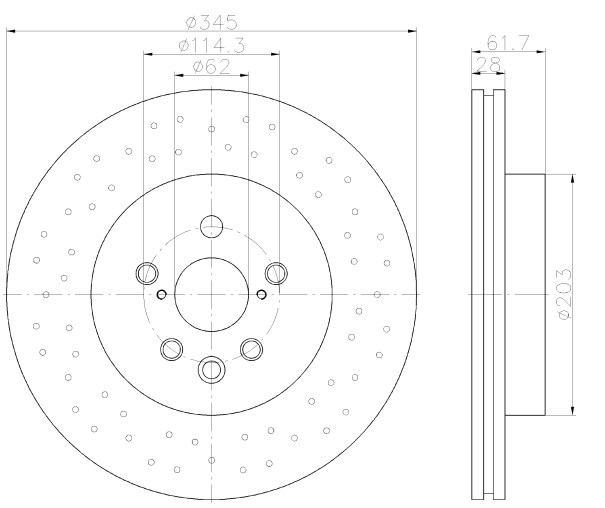

92204300

8

HONDA

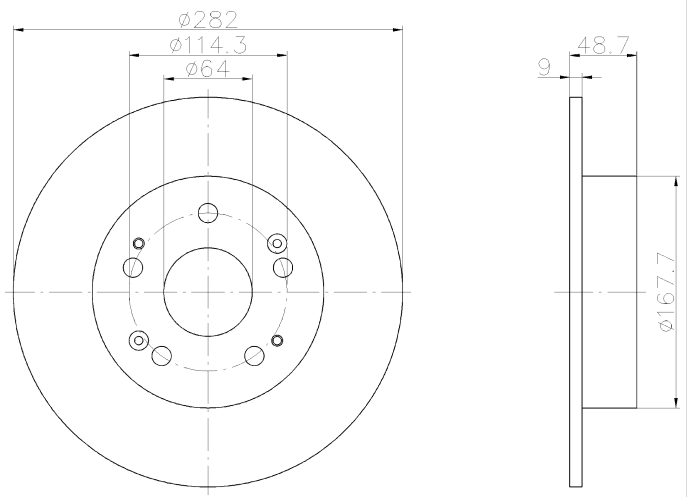

92204400

23.5

MITSUBISHI, SMART

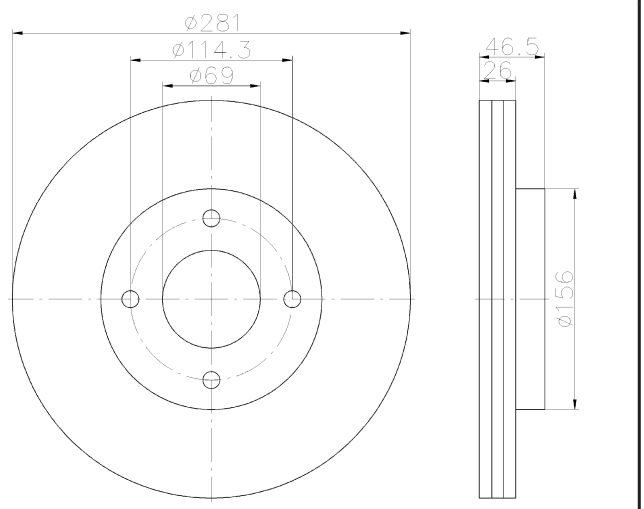

92204503

21 PRO

DAIHATSU, PERODUA, SUBARU

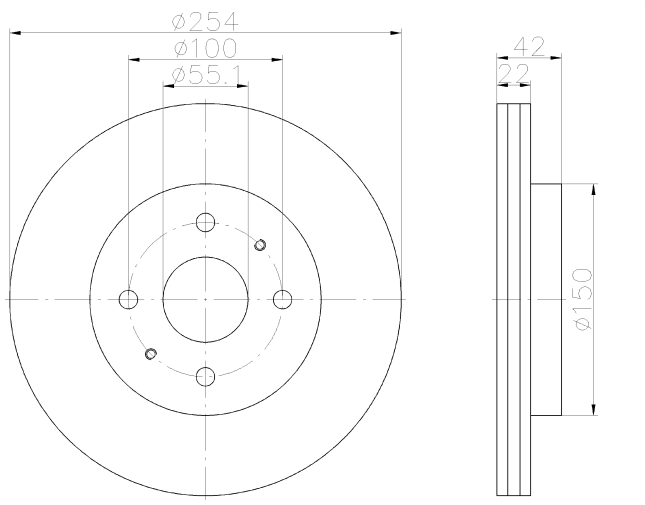

92204603

29 PRO

LEXUS, TOYOTA

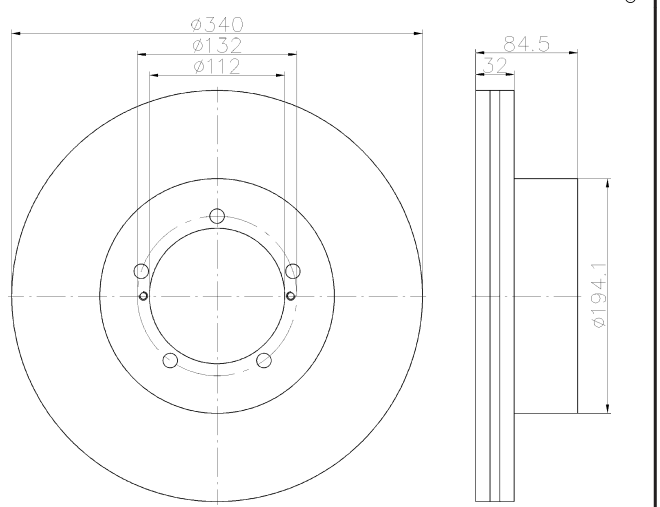

92204703

18 PRO

SUZUKI

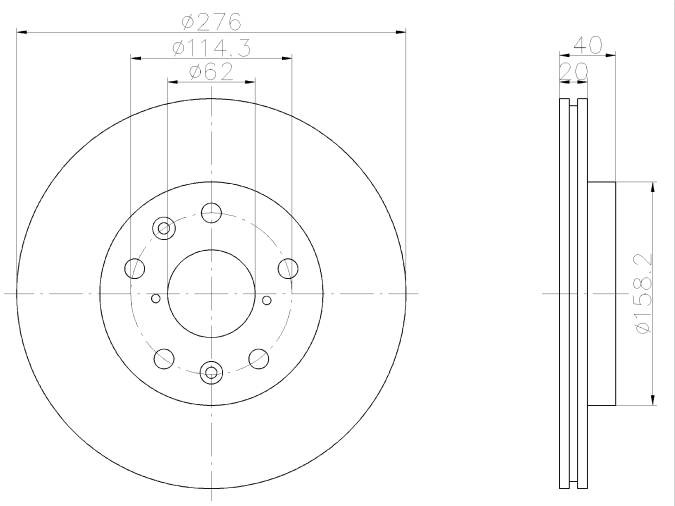

92204900

16

HYUNDAI

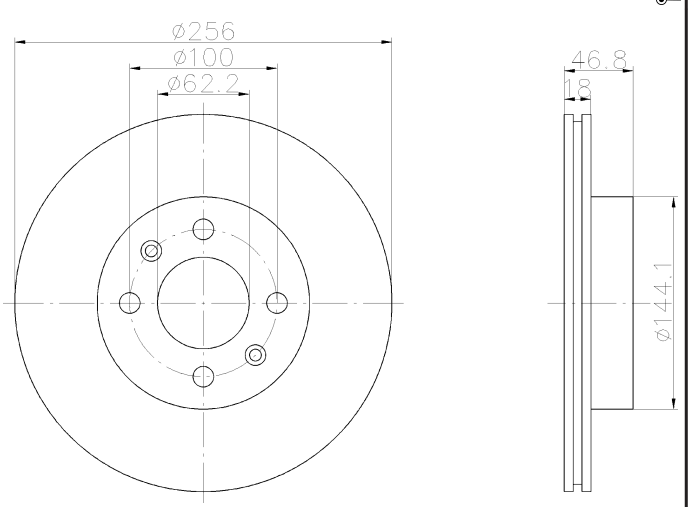

Illustrations

92205000

18.4

KIA

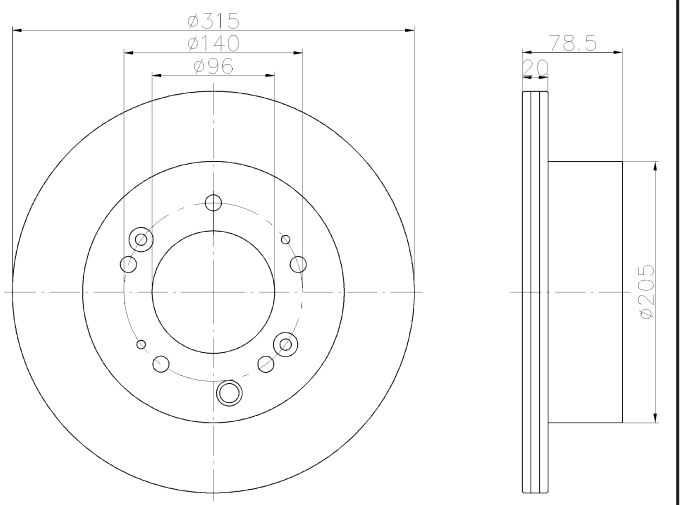

92205503

10 PRO

CHEVROLET, CHEVROLET (SGM), HOLDEN, OPEL, VAUXHALL

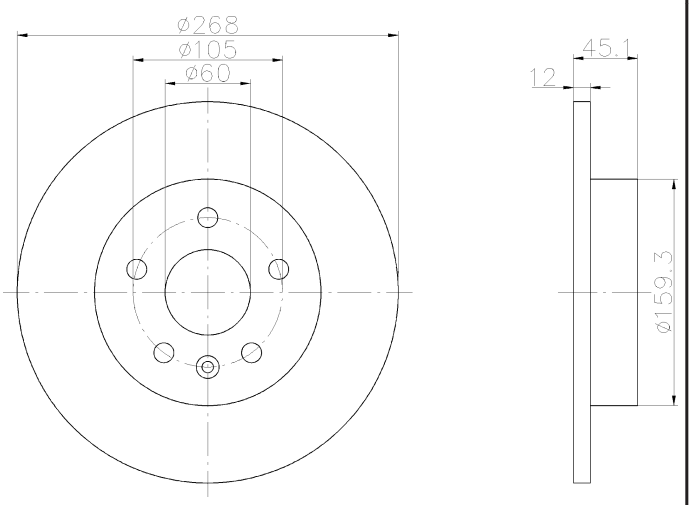

92205603

23 PRO

CHEVROLET, CHEVROLET (SGM), HOLDEN, OPEL, VAUXHALL

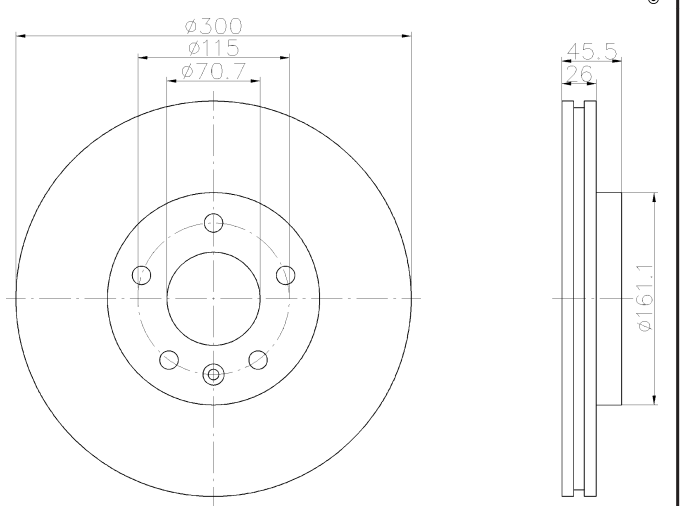

92205703

10 PRO

CHEVROLET, CHEVROLET (SGM), HOLDEN, OPEL, VAUXHALL

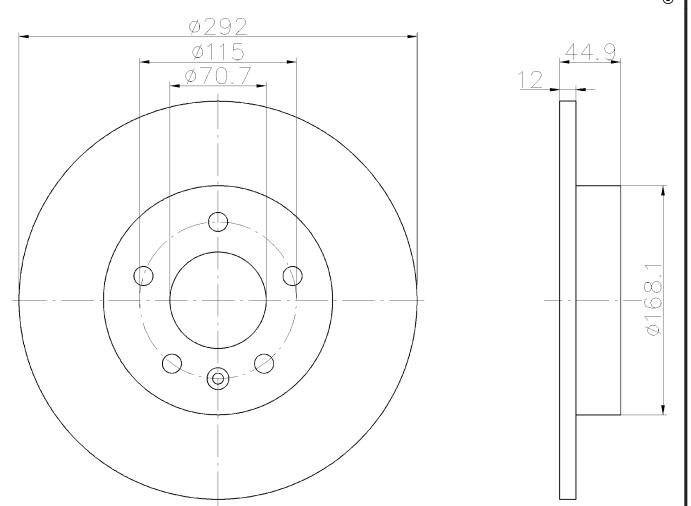

92213603

34 PRO

VOLKSWAGEN

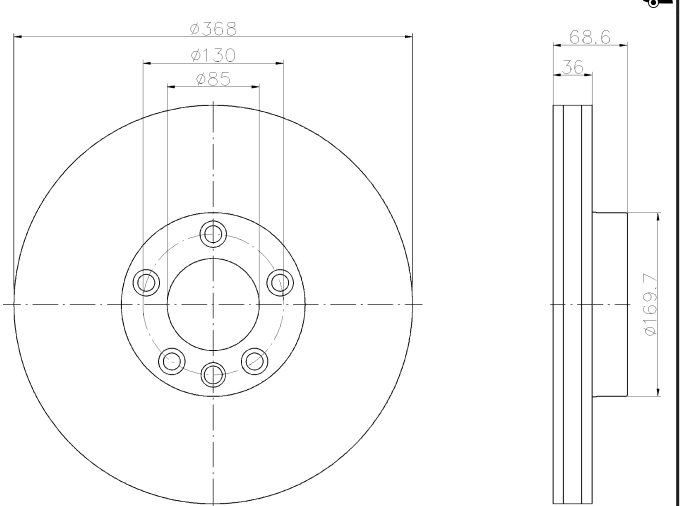

92220803

26 PRO

ALFA ROMEO, DODGE

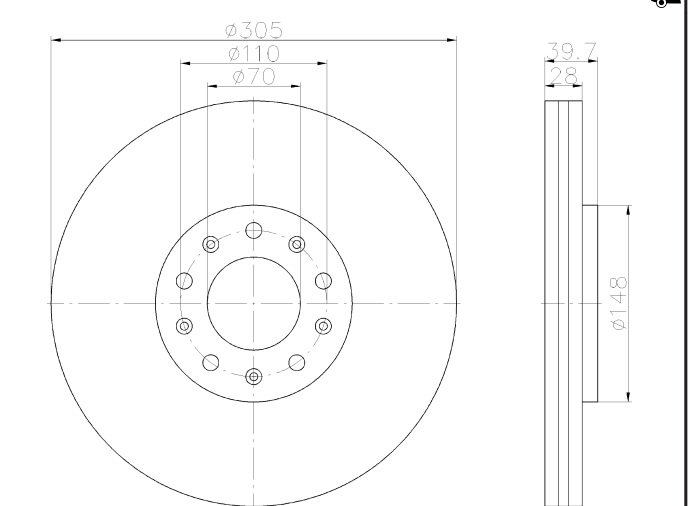

92220903

26 PRO

ALFA ROMEO

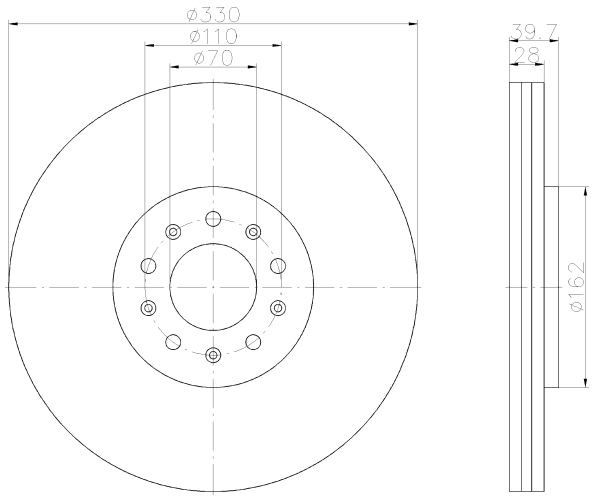

92221003

10 PRO

ALFA ROMEO

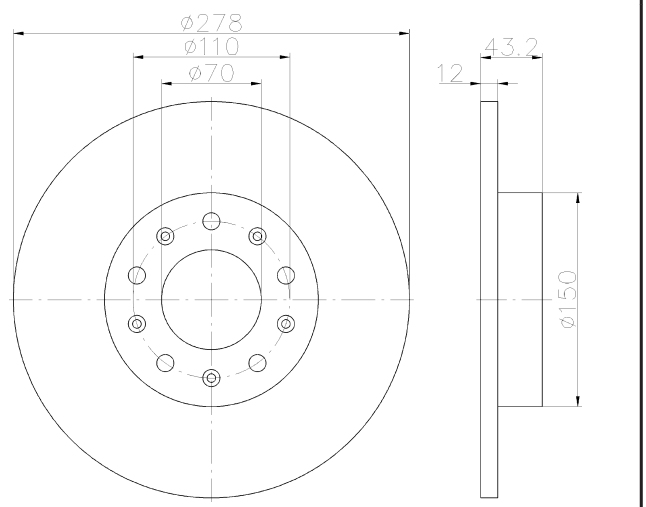

92221103

20 PRO

ALFA ROMEO

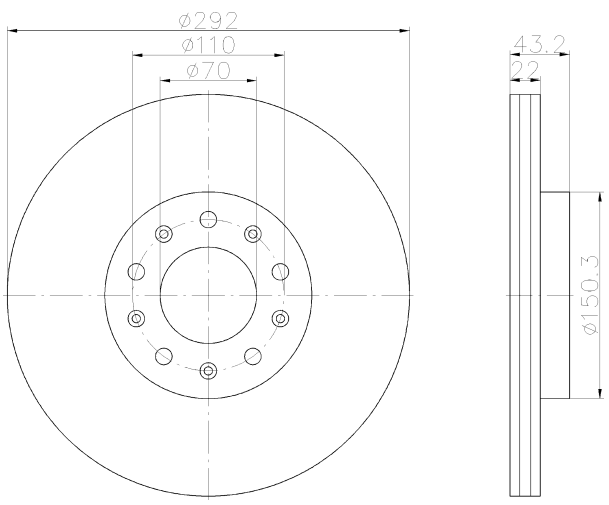

92221403

13 PRO

JAGUAR

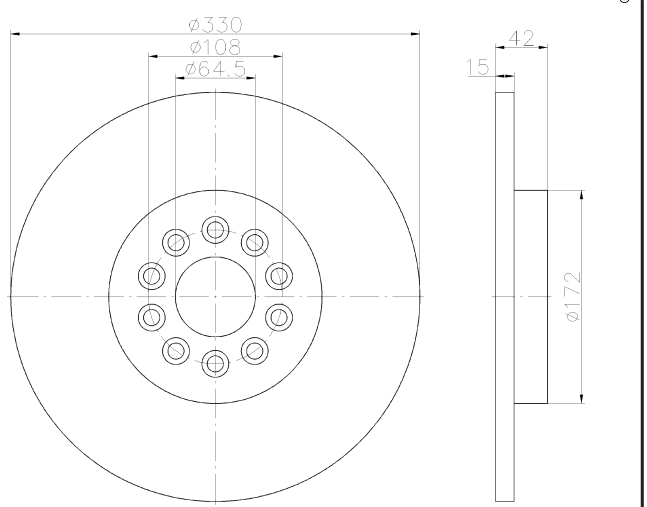

92221700

30.4

HYUNDAI

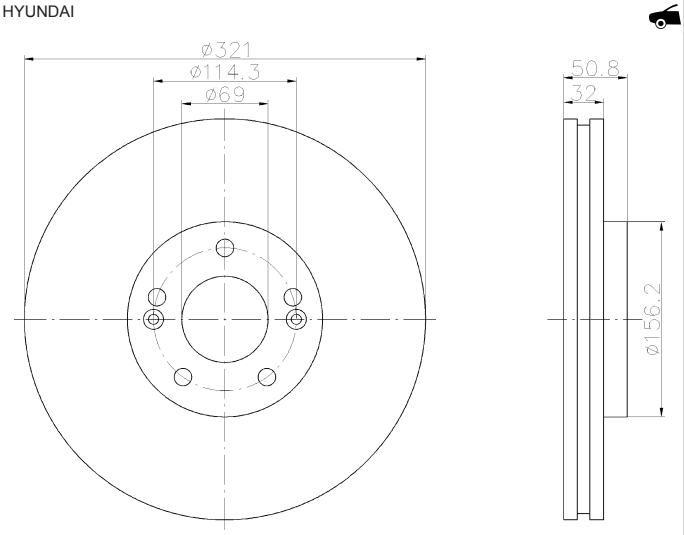

92221800

24.4

HYUNDAI

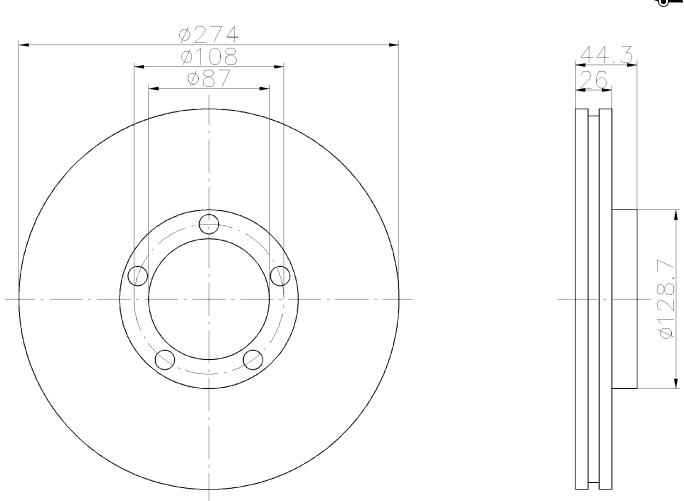

92221803

24.4 PRO

HYUNDAI

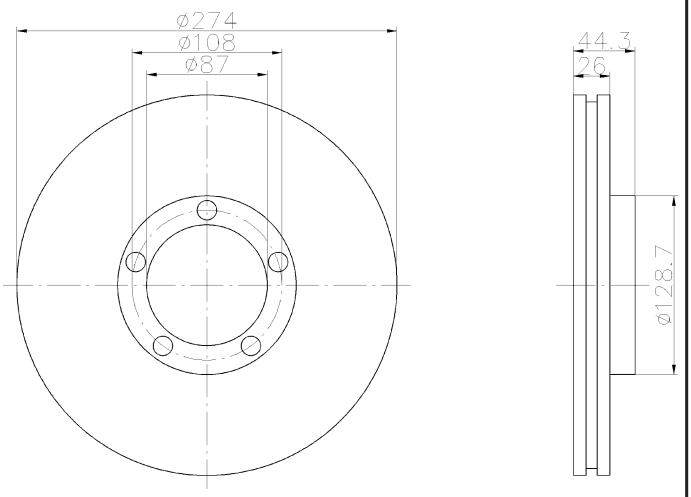

92222000

26

NISSAN, RENAULT, RENAULT SAMSUNG

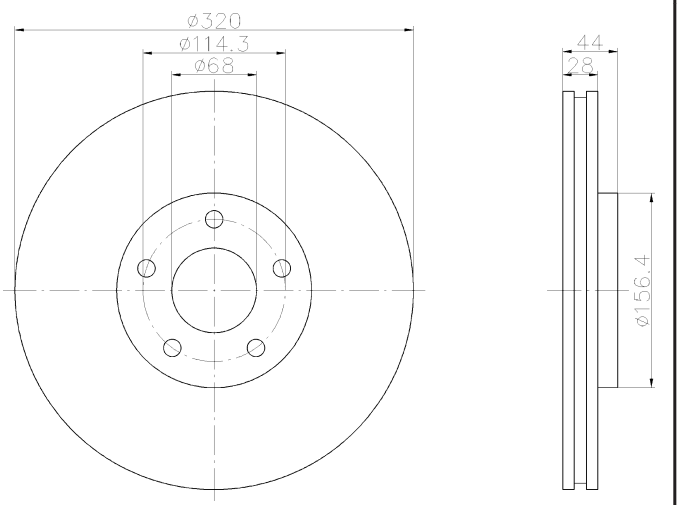

92222003

26 PRO

NISSAN, RENAULT, RENAULT SAMSUNG

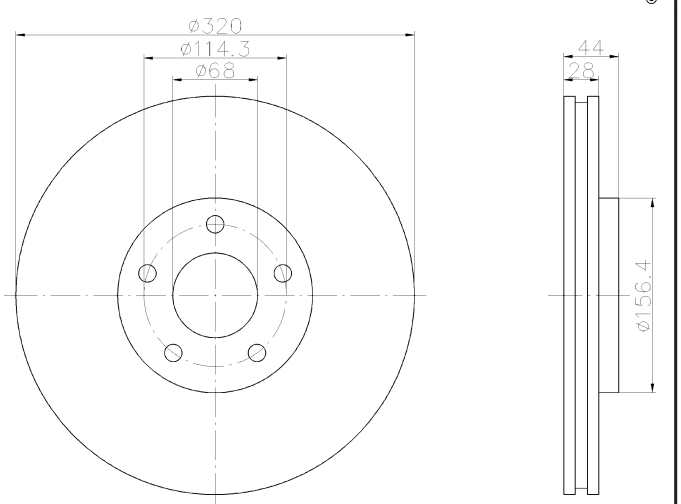

92222100

20

SUZUKI

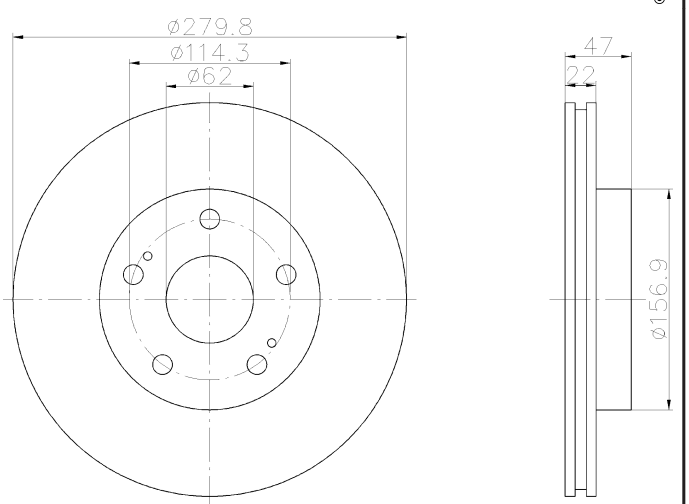

92222200

14

SUZUKI

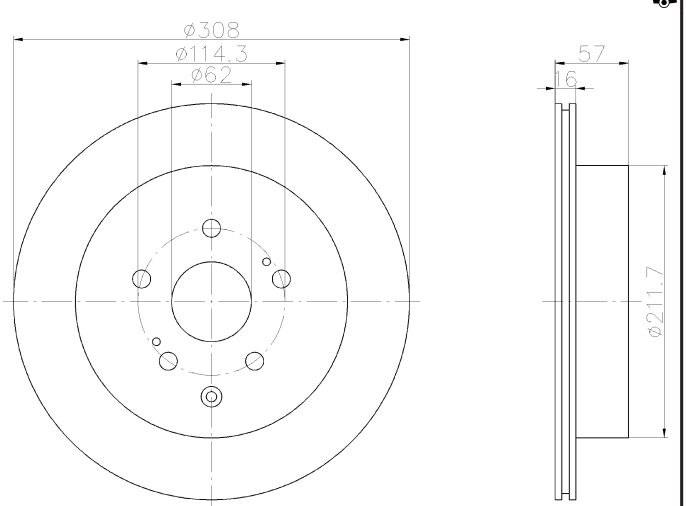

92222300

8

SUZUKI

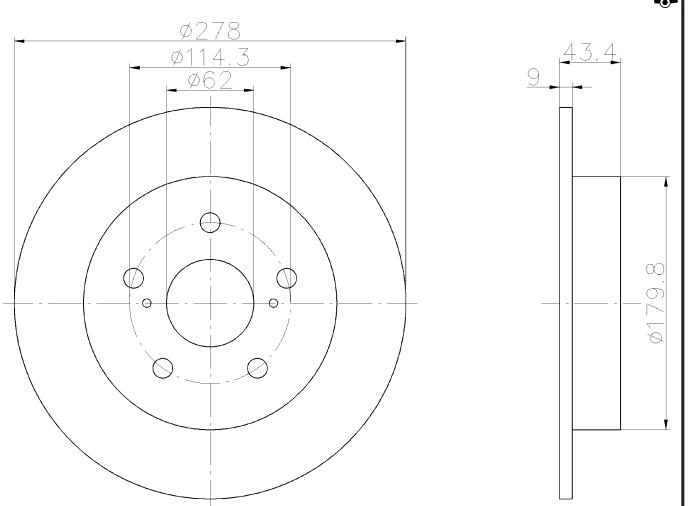

92222500

9

TOYOTA

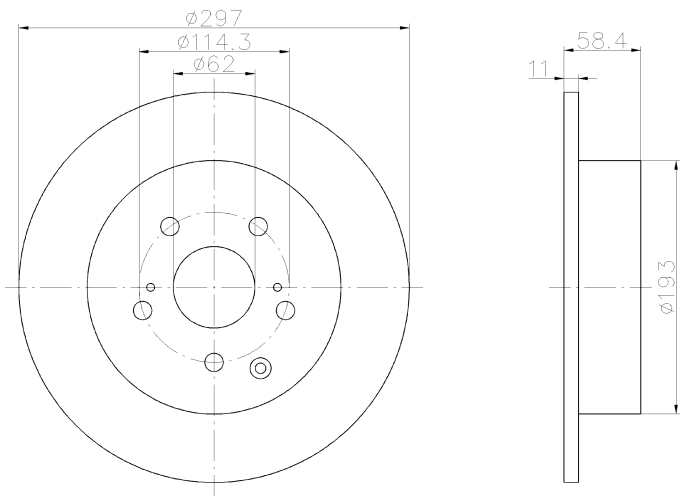

92222600

23

TOYOTA

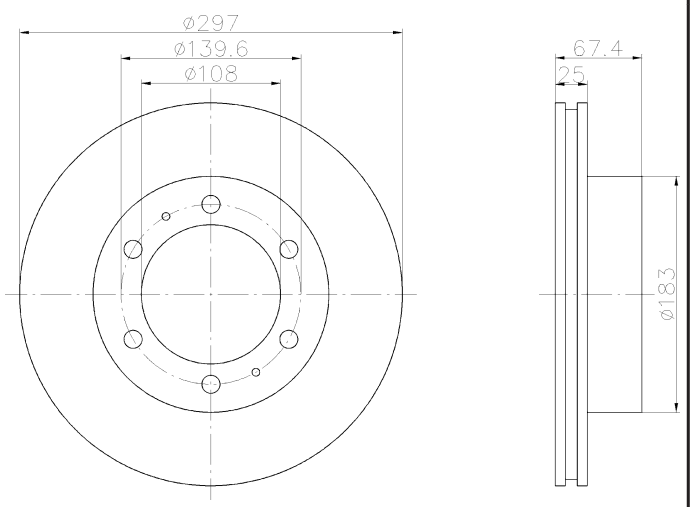

92222903

10.5 PRO

CHEVROLET, HOLDEN, OPEL, SAAB, VAUXHALL

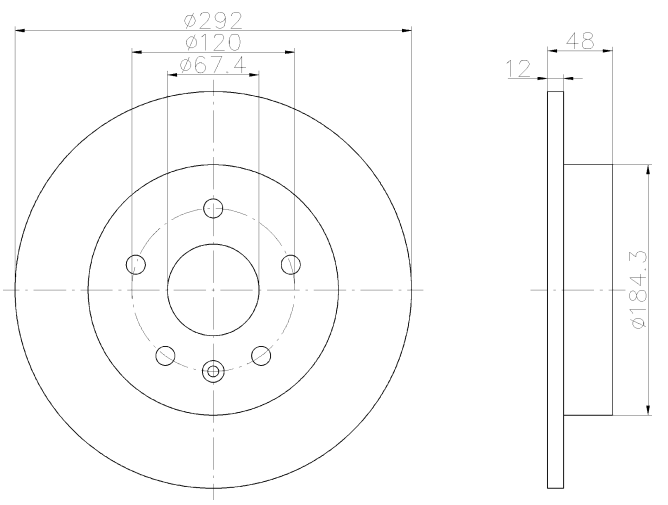

92223000

26

FORD, FORD AUSTRALIA, MAZDA

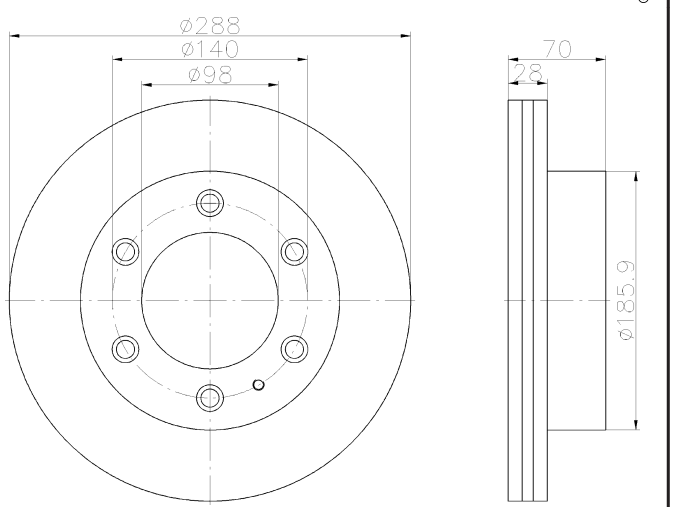

92223003

26 PRO

FORD, FORD AUSTRALIA, MAZDA

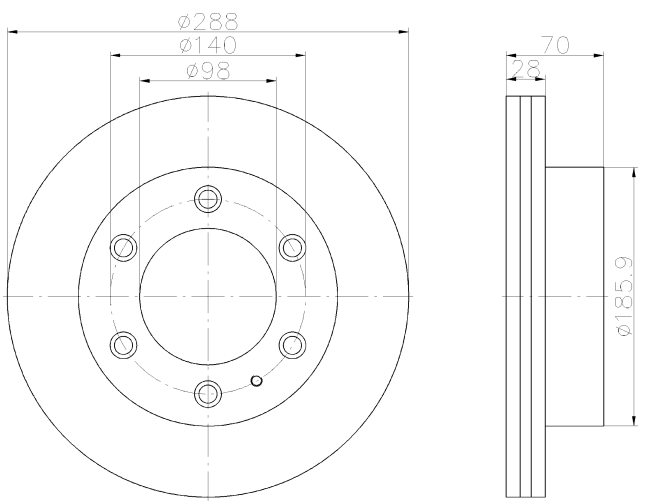

92223103

30 PRO

JAGUAR

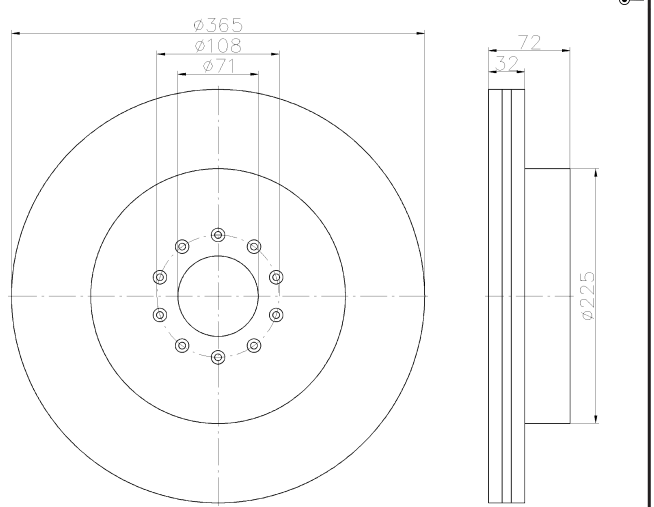

92223200

9.5 ABS

RENAULT

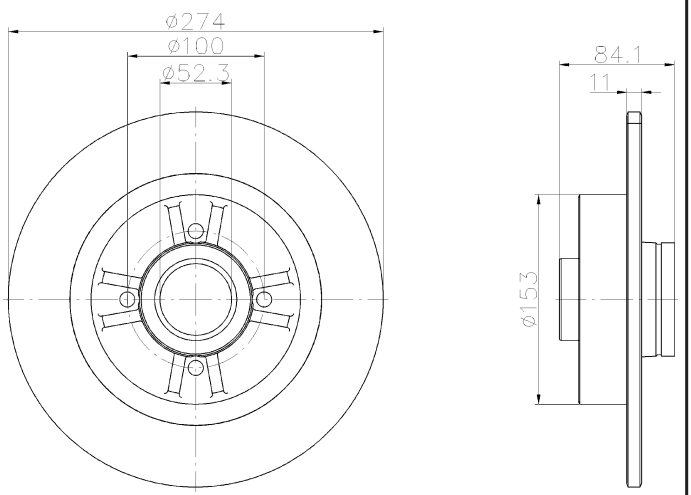

92223403

9.4 PRO

HYUNDAI, KIA

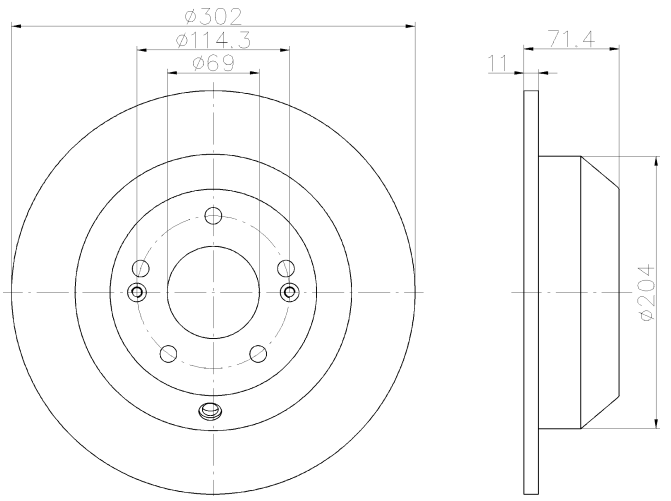

92223503

23 PRO

MAZDA

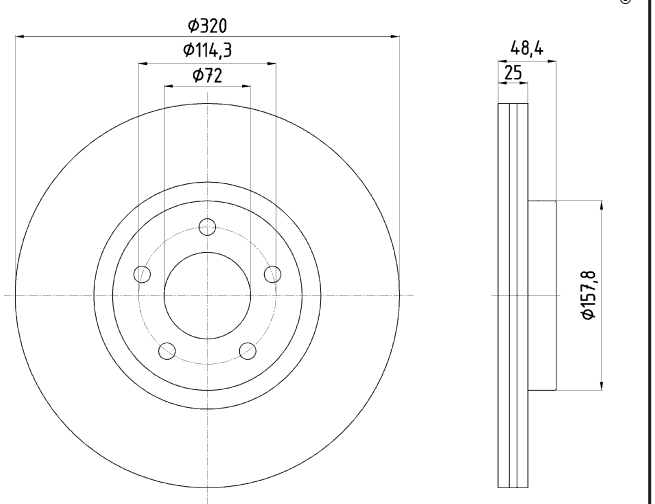

92223603

16 PRO

MAZDA

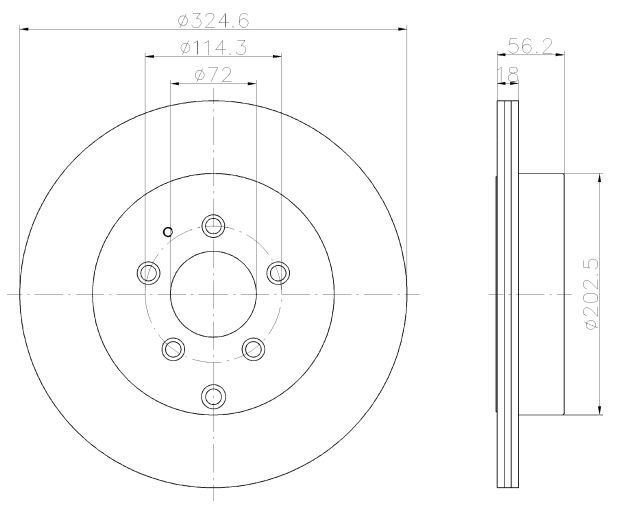

92223700

20

MITSUBISHI

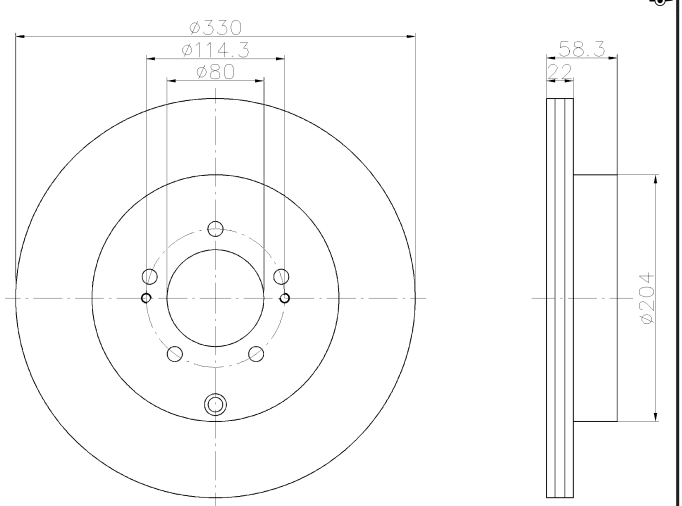

92223903

29 PRO

LEXUS, TOYOTA

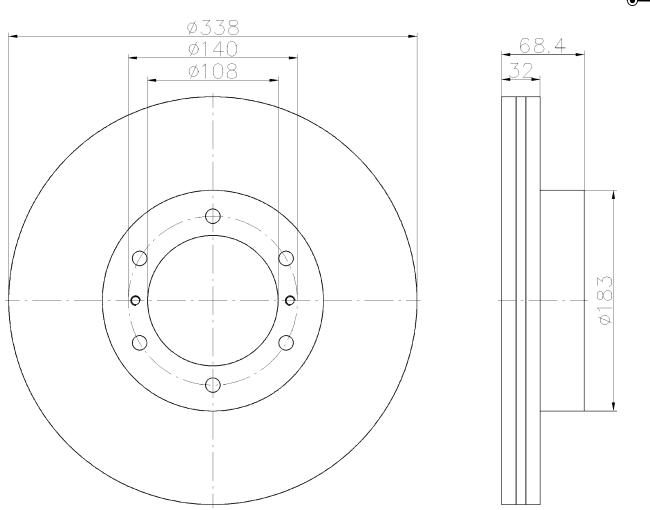

92224003

7.5 PRO

LEXUS, SUBARU, TOYOTA

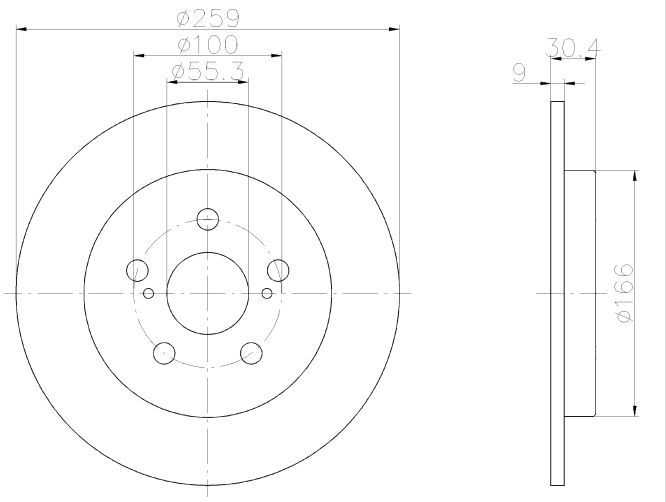

92224103

8 PRO

HONDA

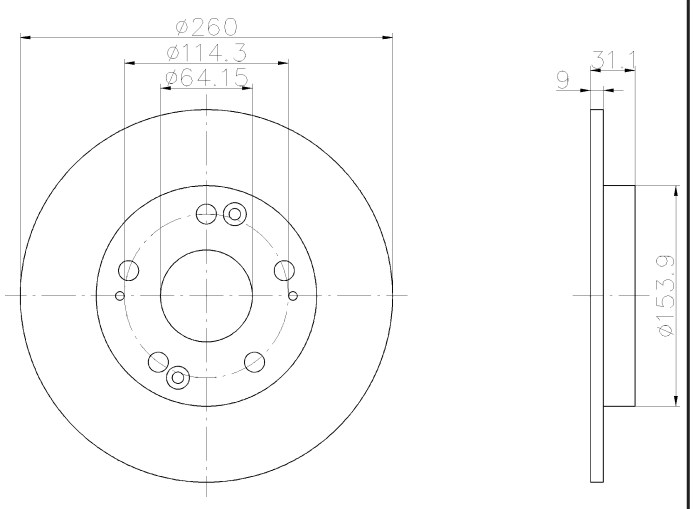

92224203

31 PRO

LEXUS

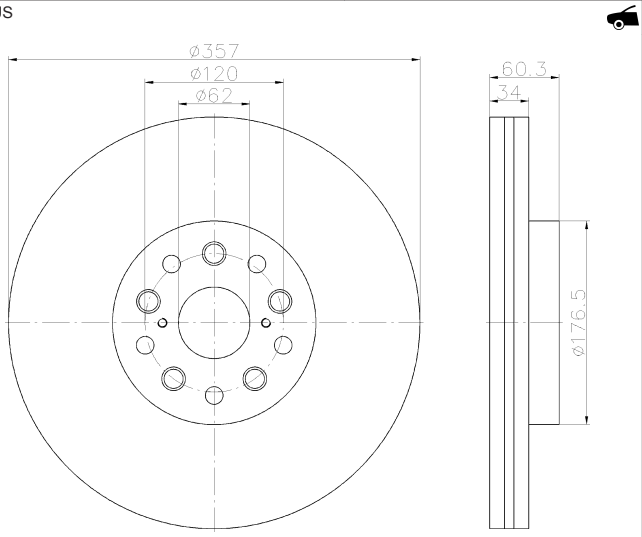

92224303

31 PRO

LEXUS

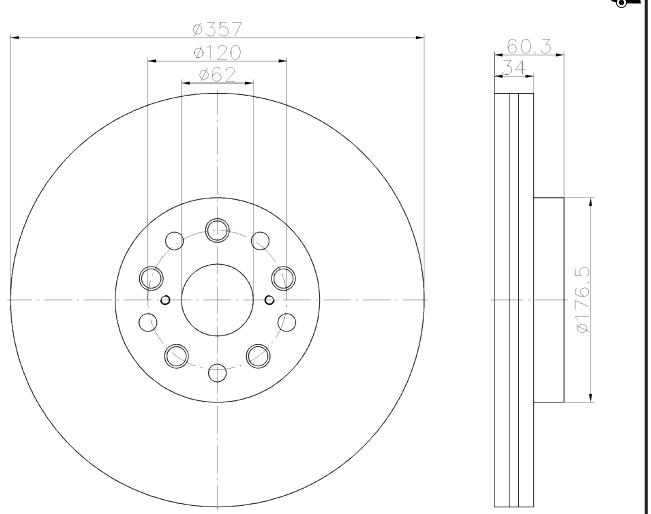

92224403

20 PRO

LEXUS

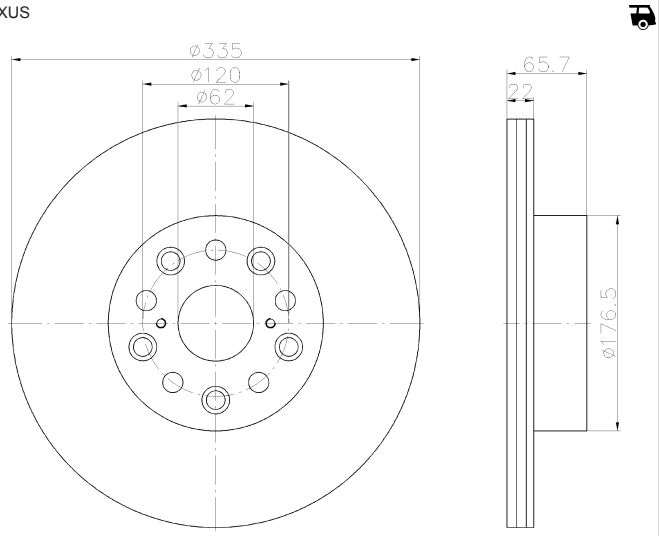

92224503

20 PRO

LEXUS

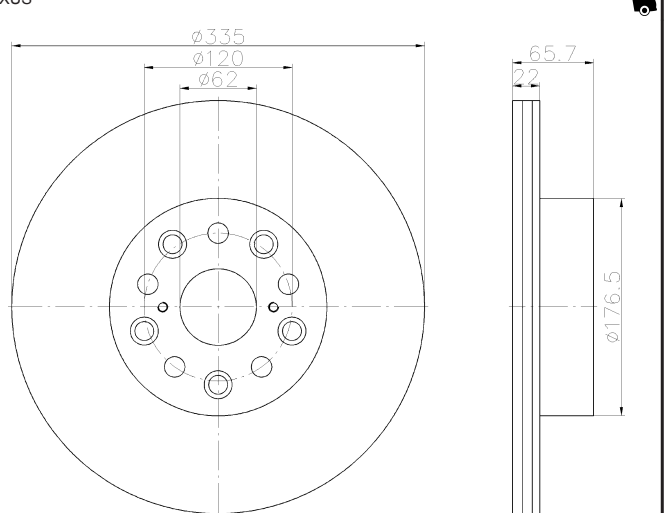

92224603

30 PRO

MERCEDES-BENZ

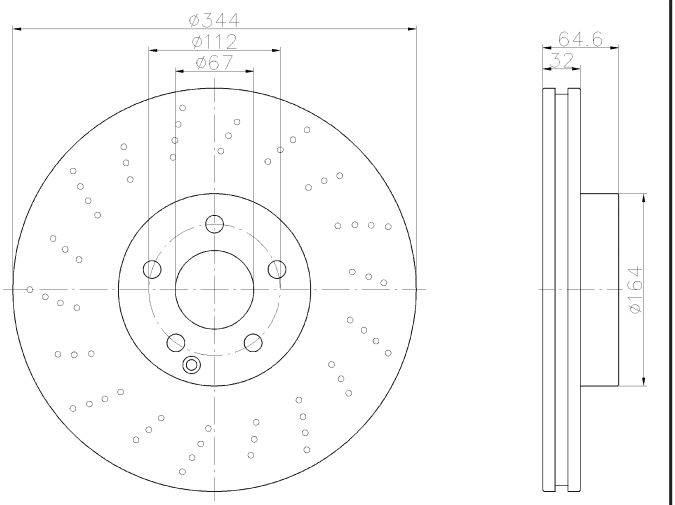

92224803

17 PRO

LAND ROVER

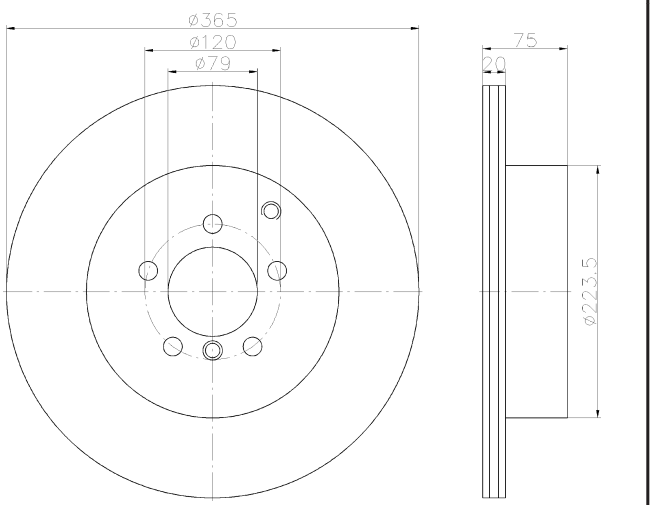

92224903

8 PRO

AUDI, SEAT, SKODA, SKODA (SVW), VOLKSWAGEN, VOLKSWAGEN (SVW)

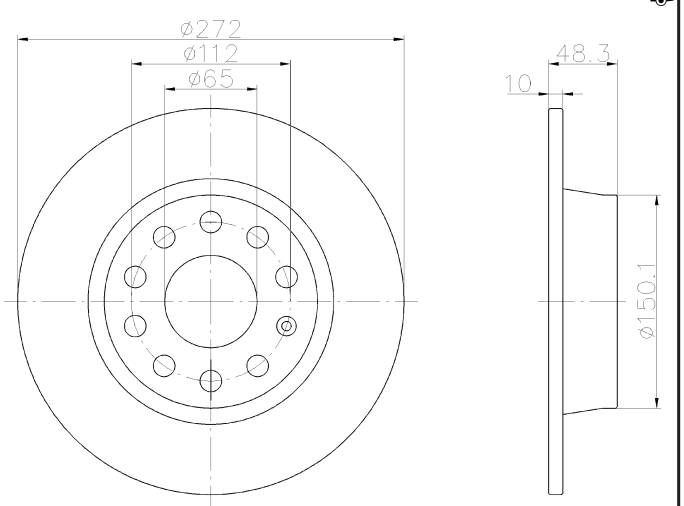

92225003

22 PRO

LEXUS, TOYOTA

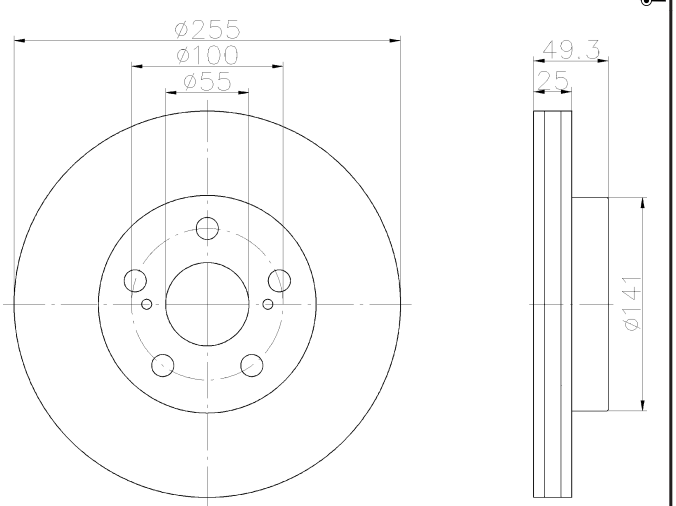

92225103

10 PRO

CHEVROLET

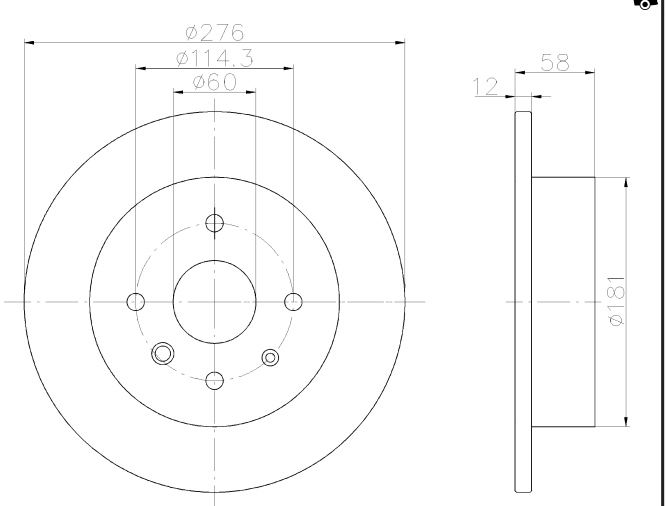

92226103

8.4 PRO

HYUNDAI, KIA

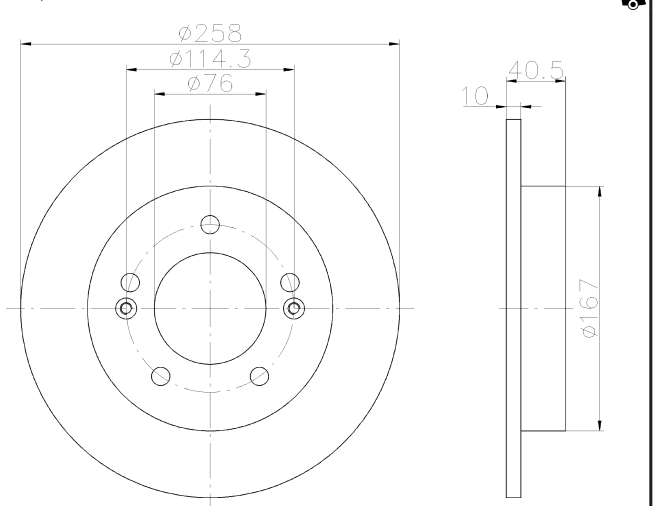

92226200

27.5

CHEVROLET, ISUZU, SAAB

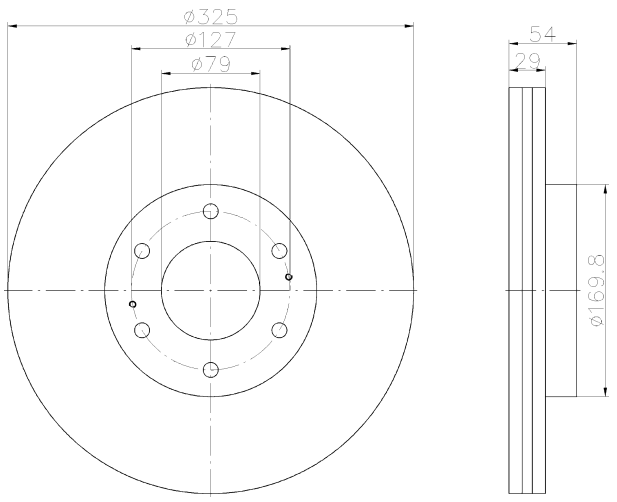

92226300

20

TOYOTA

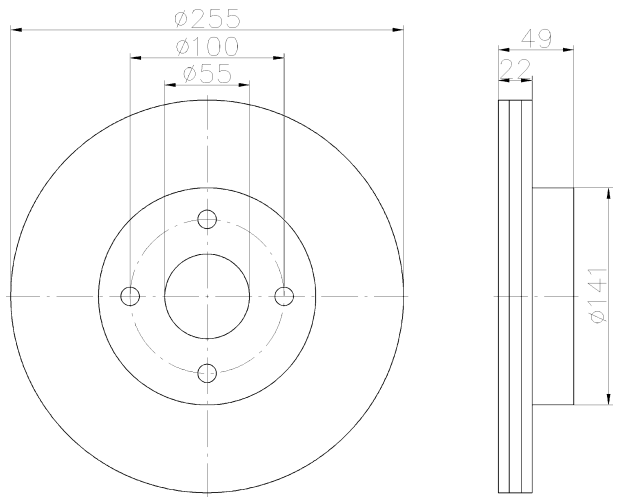

92226400

24

KIA

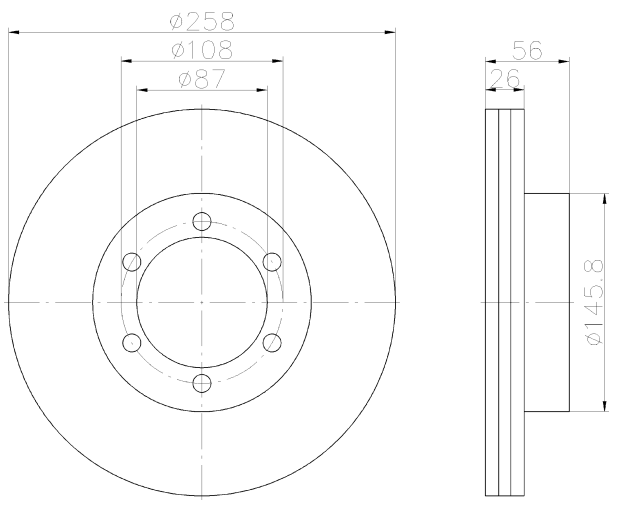

92227103

18.4 PRO

BMW

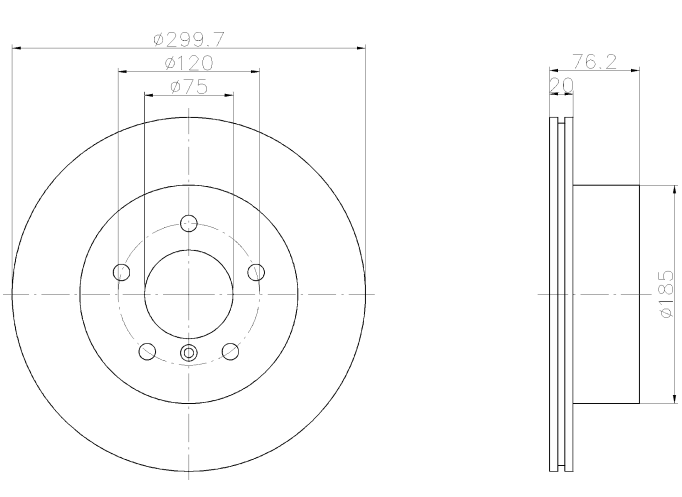

92227203

8 PRO

HONDA

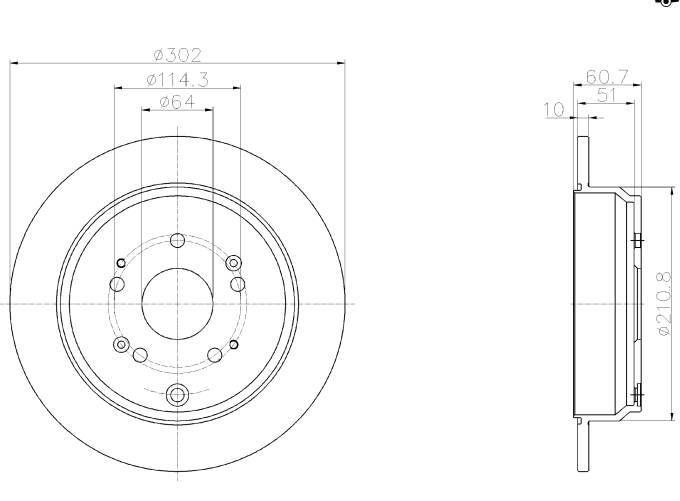

92227303

22 PRO

CHEVROLET, CHEVROLET (SGM)

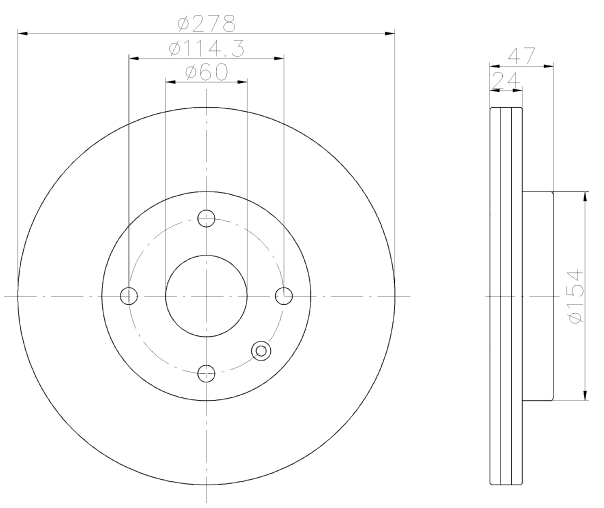

Illustrations

92227400

8.4

MITSUBISHI

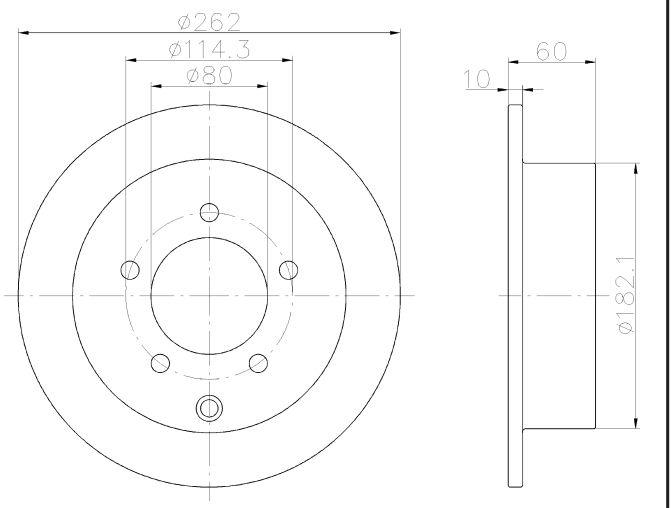

92227403

8.4 PRO

MITSUBISHI

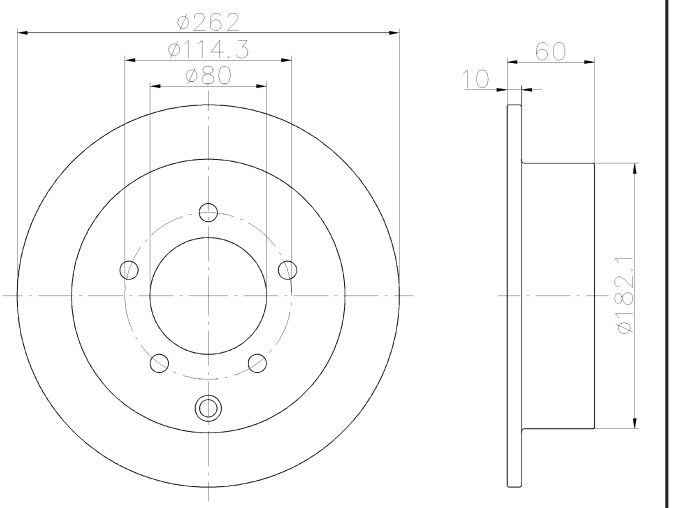

92227503

21 PRO

HONDA

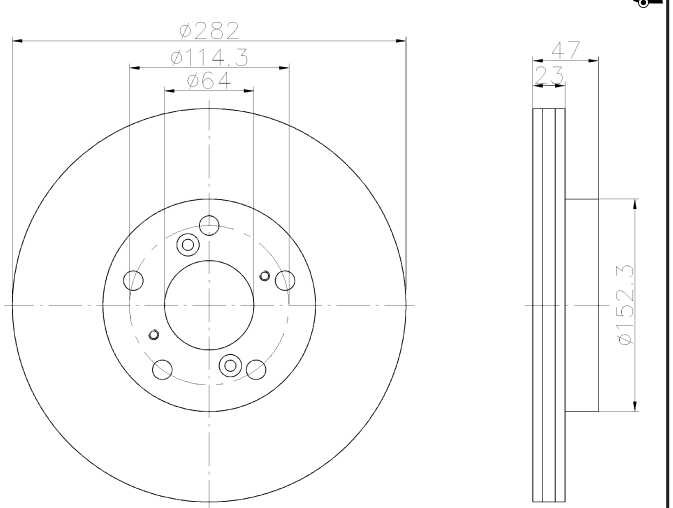

92227603

8 PRO

HONDA

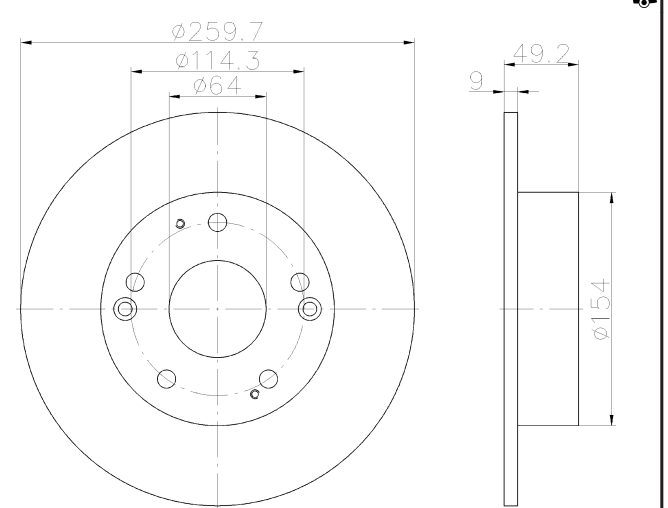

92227700

10.5

JEEP

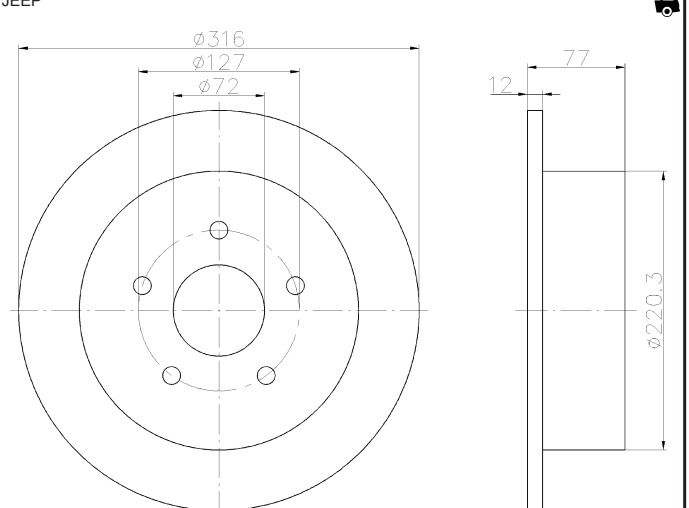

92227803

18 PRO

SUBARU

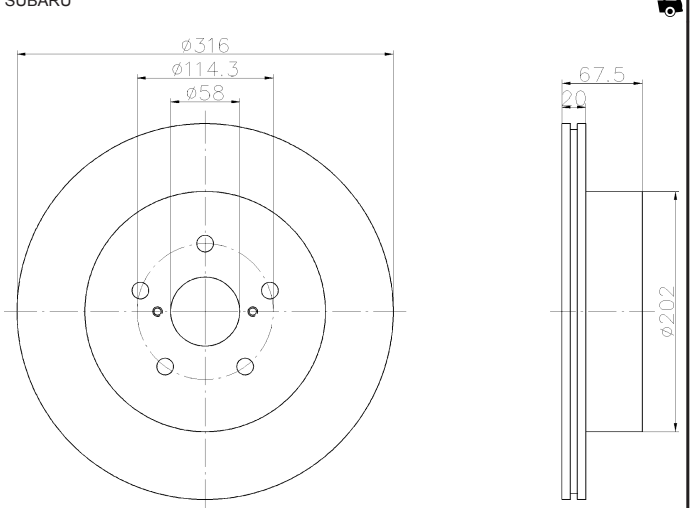

92228303

8.5 PRO

LEXUS

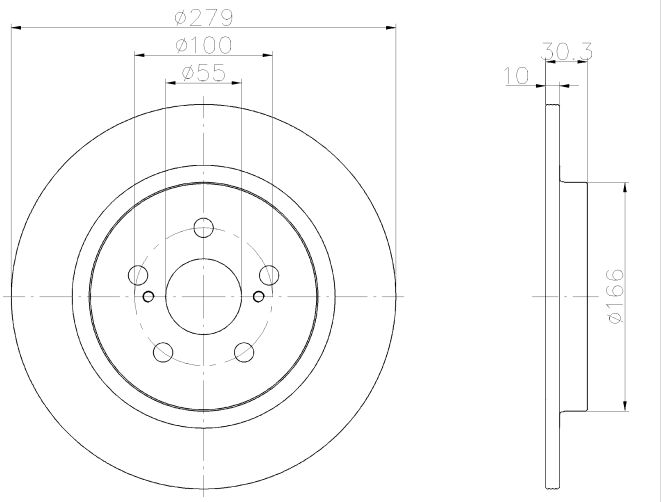

92228400

26

NISSAN

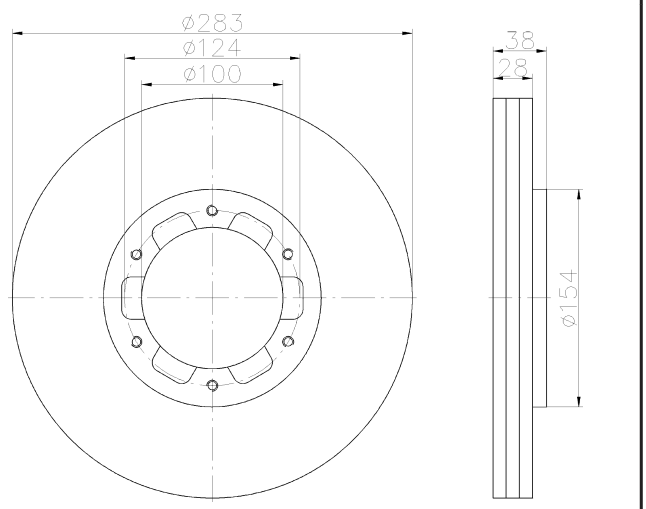

92228503

26 PRO

ALFA ROMEO

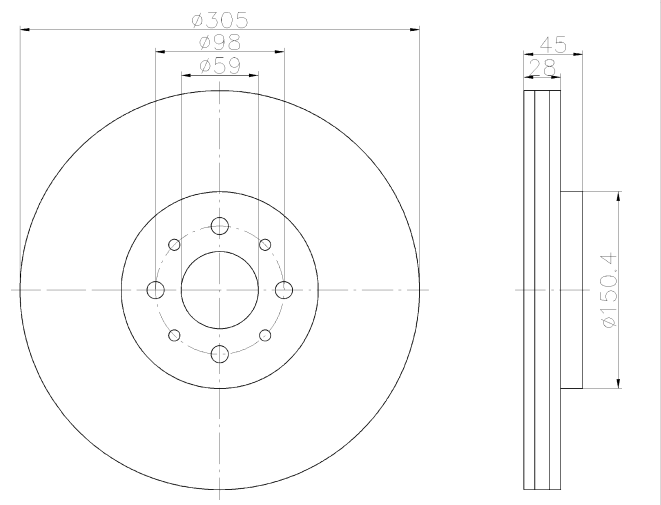

92228600

24.5

NISSAN, OPEL, RENAULT, VAUXHALL

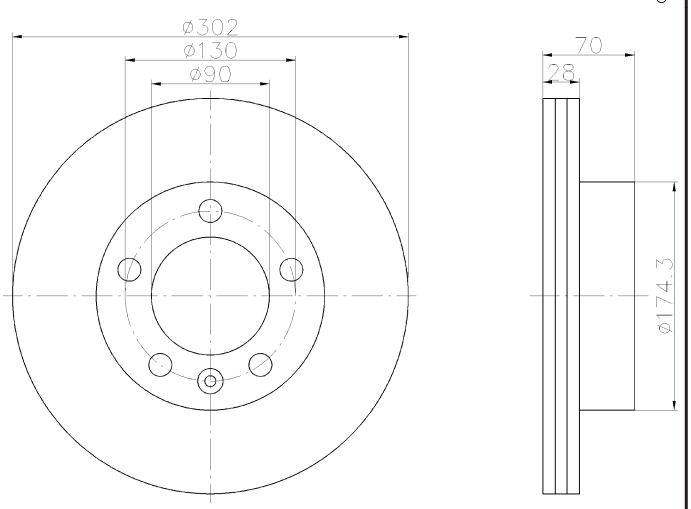

92228700

10

NISSAN, OPEL, RENAULT, VAUXHALL

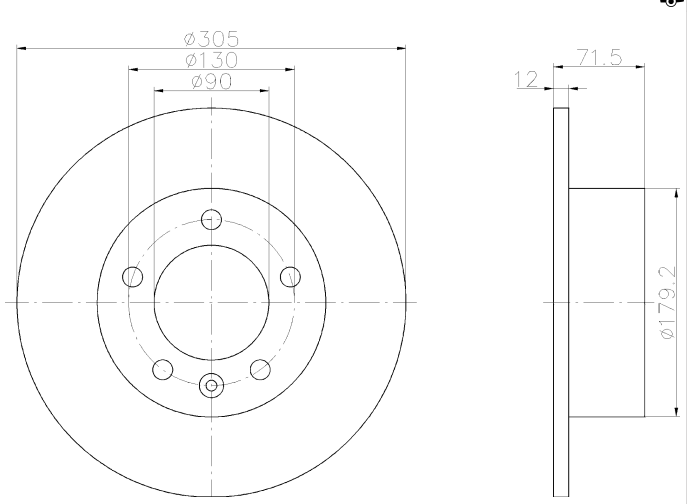

92228800

10

NISSAN, OPEL, RENAULT, VAUXHALL

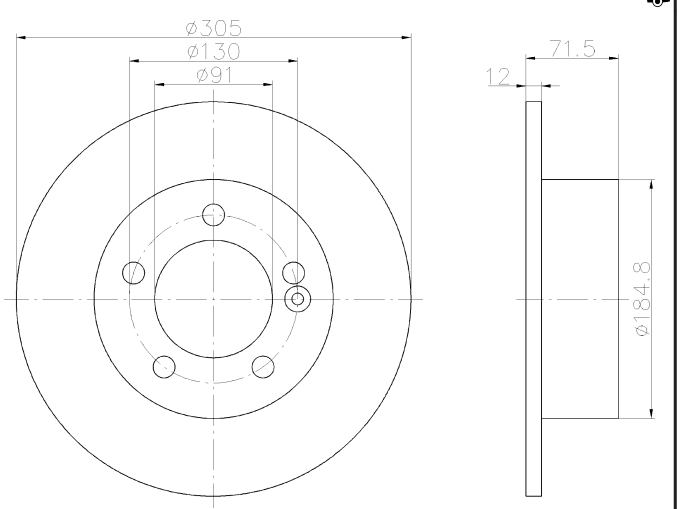

92228903

26 PRO

VOLKSWAGEN

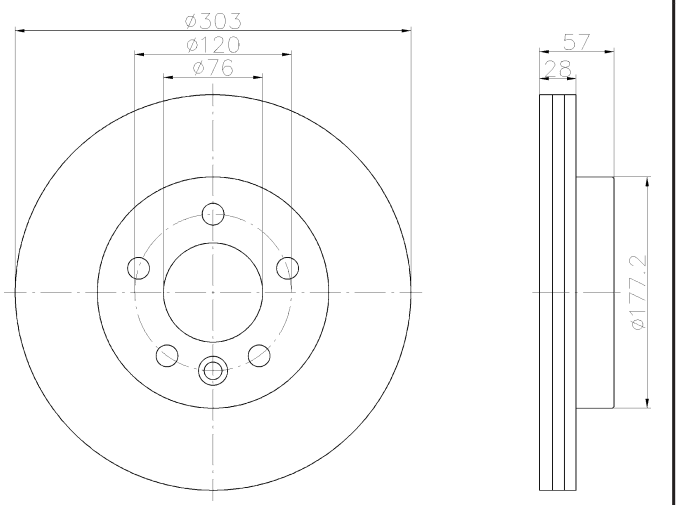

92229003

24 PRO

DAEWOO, SSANGYONG

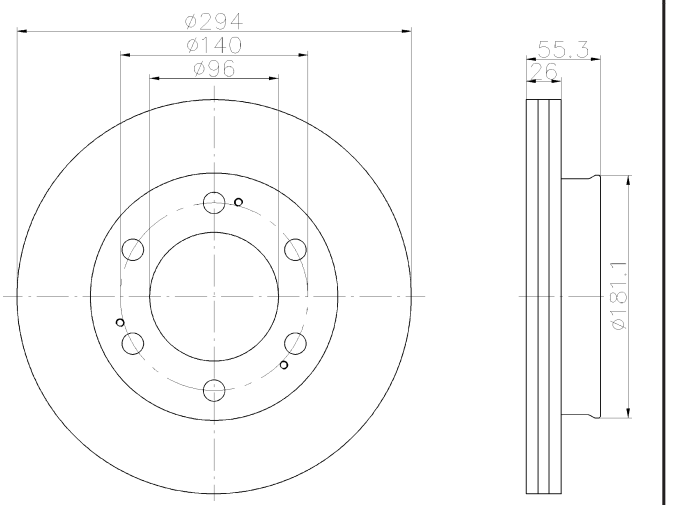

92229203

28 PRO

AUDI

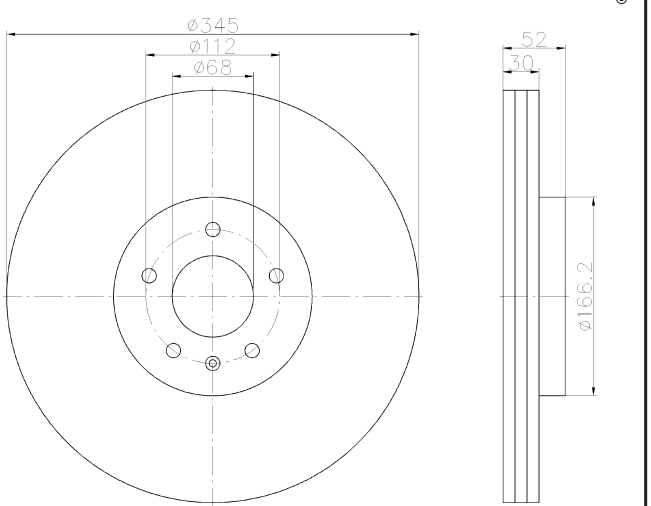

92229303

28 PRO

AUDI, AUDI (FAW)

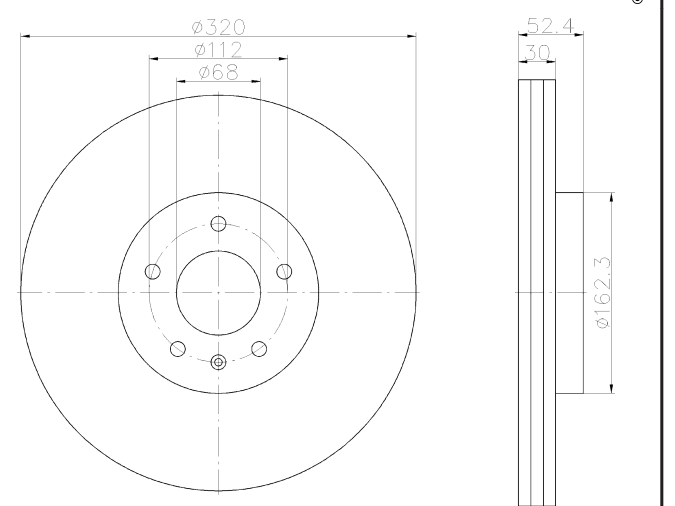

92229803

27 PRO

AUDI, SEAT, SKODA, VOLKSWAGEN

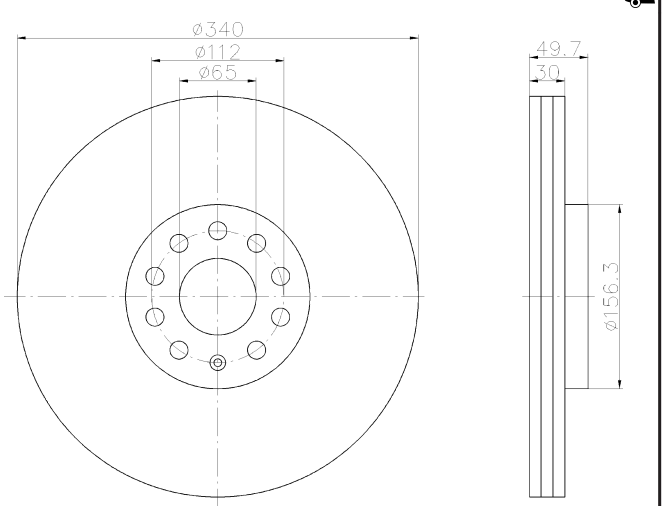

92229903

24.5 PRO

CHRYSLER

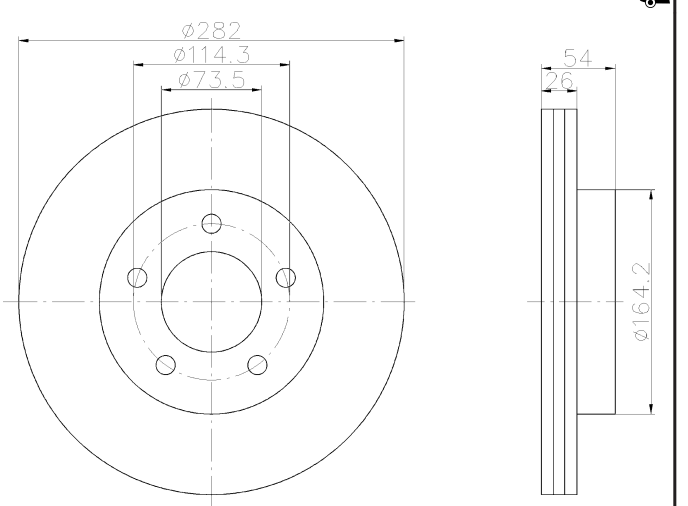

92230003

24.5 PRO

CHRYSLER

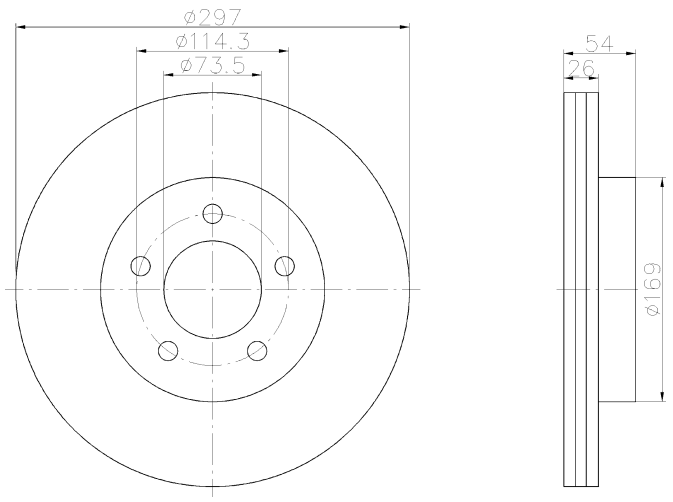

92230103

24.2 PRO

ALFA ROMEO

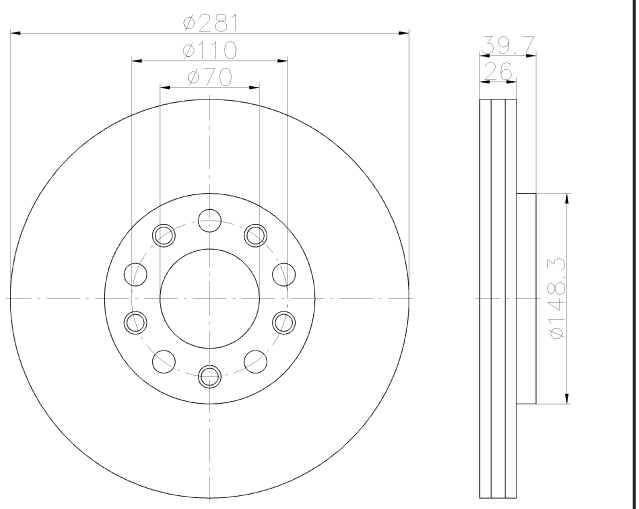

92230203

8 PRO

ALFA ROMEO, DODGE

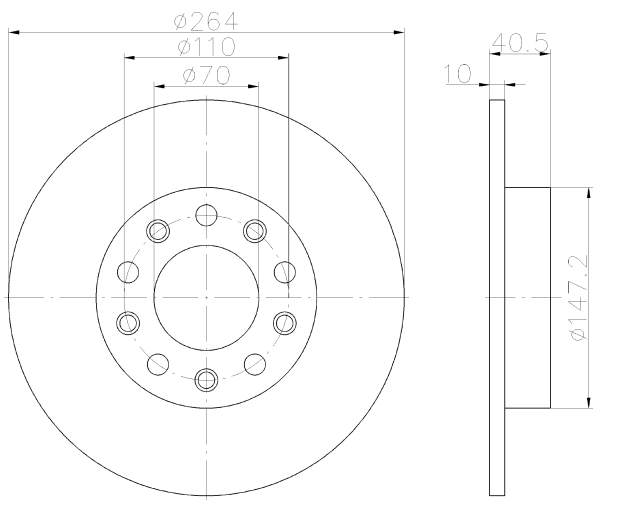

92230303

28.5 PRO

VOLKSWAGEN

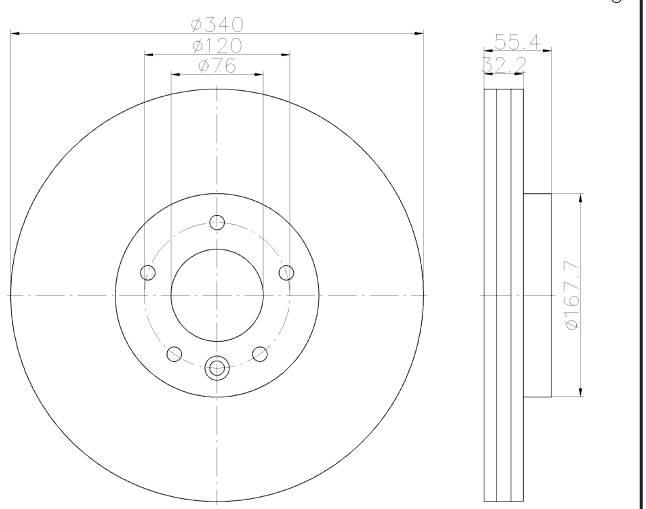

92230403

26 PRO

CHANGAN (CHANA), TOYOTA

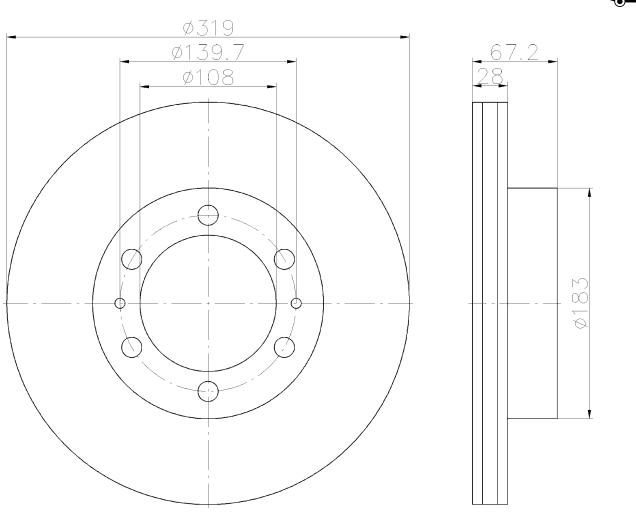

92230503

13 PRO

LAND ROVER

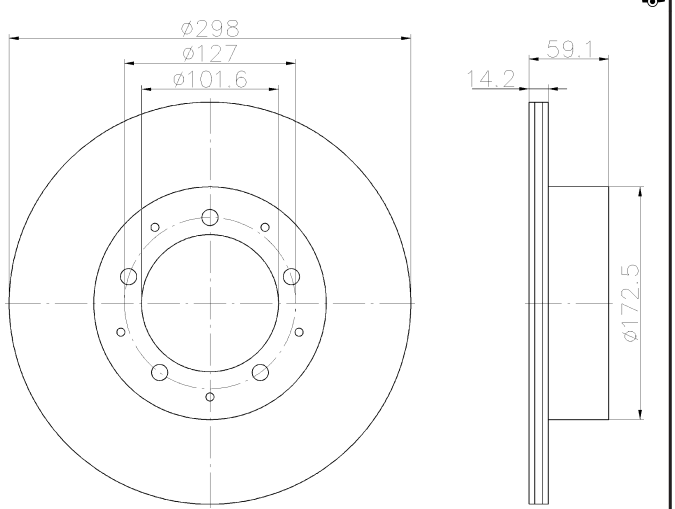

92230800

15

NISSAN, OPEL, RENAULT, VAUXHALL

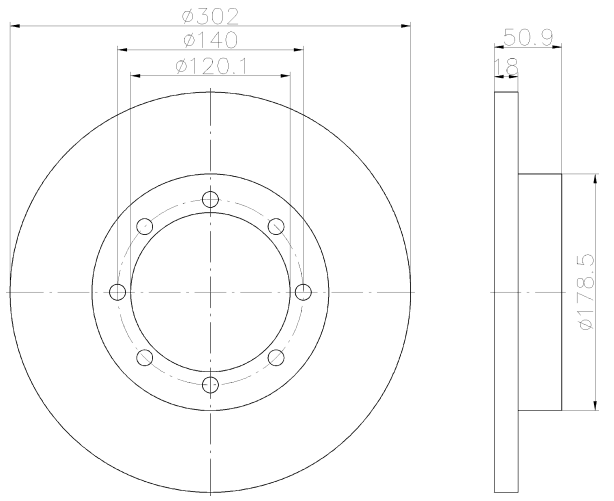

92231303

PRO

10

CITROËN, PEUGEOT

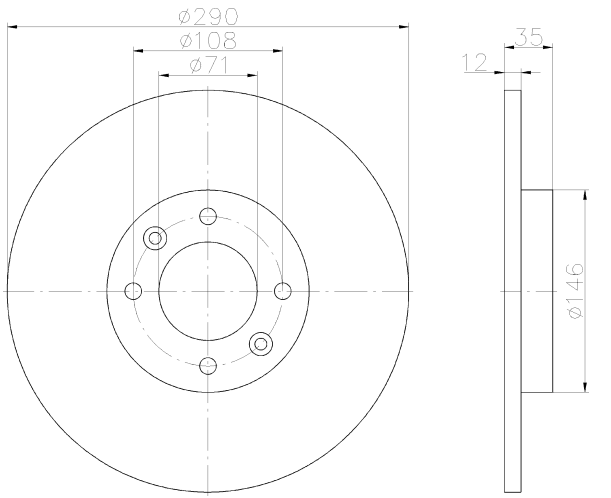

92231403

PRO

8

SUZUKI

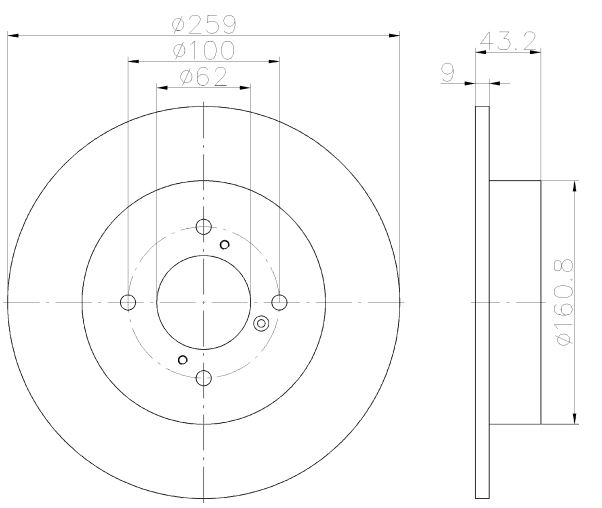

92231500

25

FORD

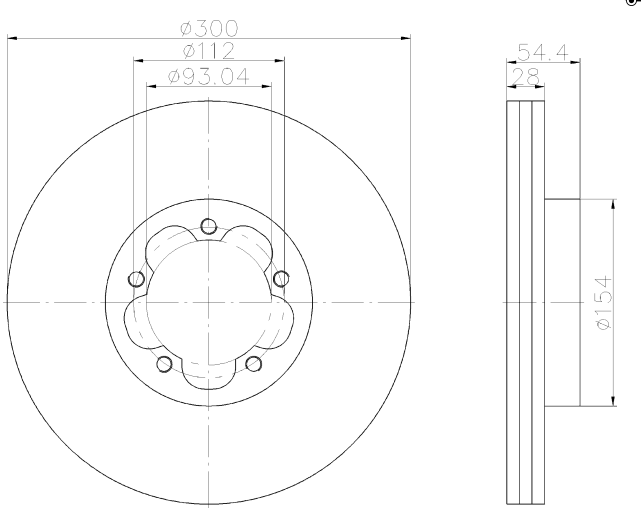

92231700

ABS

7

RENAULT

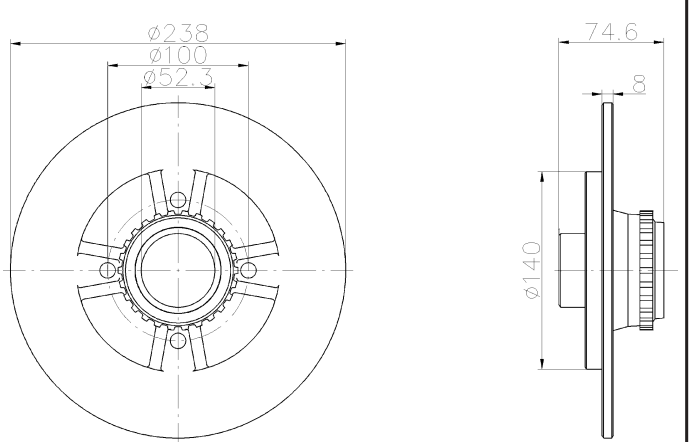

92232203

PRO

22

NISSAN

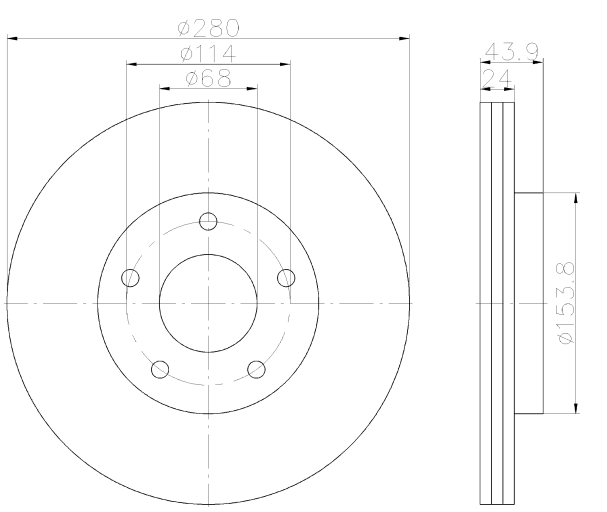

92232303

26 PRO

CITROËN, PEUGEOT

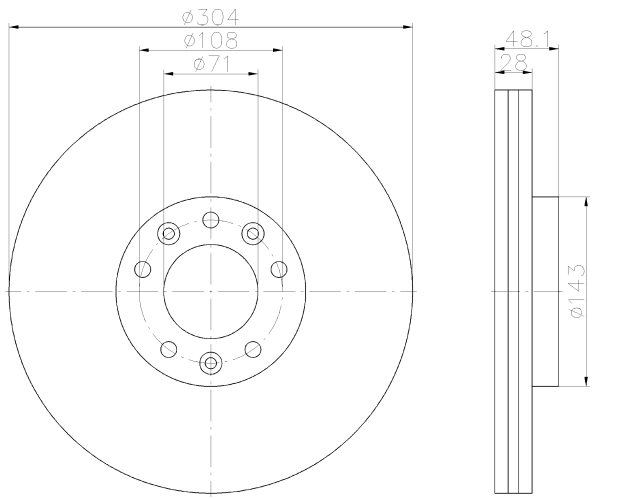

92232403

27 PRO

SEAT, VOLKSWAGEN

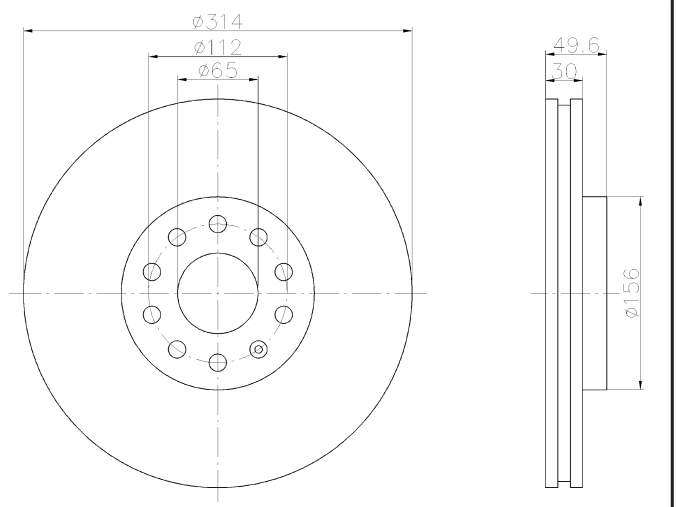

92232503

24.7 PRO

CITROËN, PEUGEOT

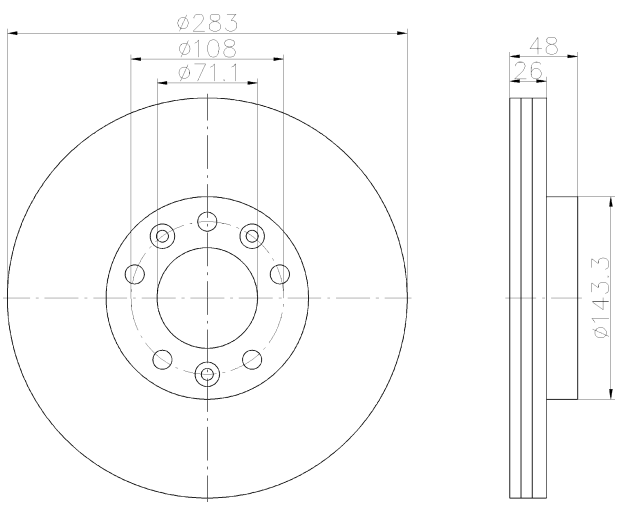

92232603

9.5 PRO

RENAULT

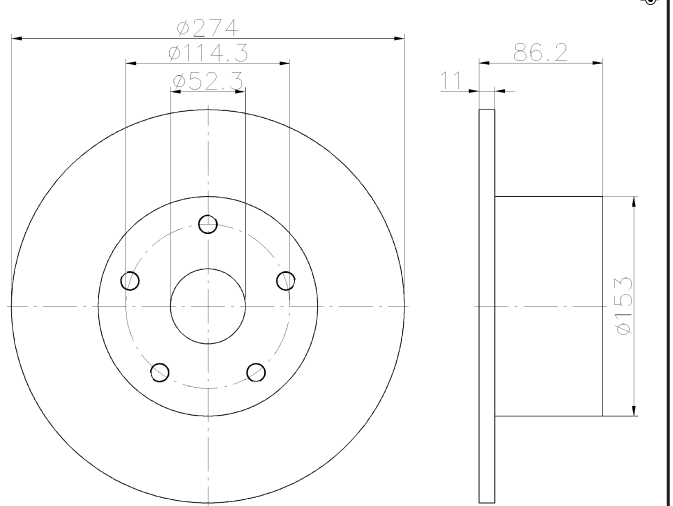

92232703

22 PRO

LEXUS, TOYOTA

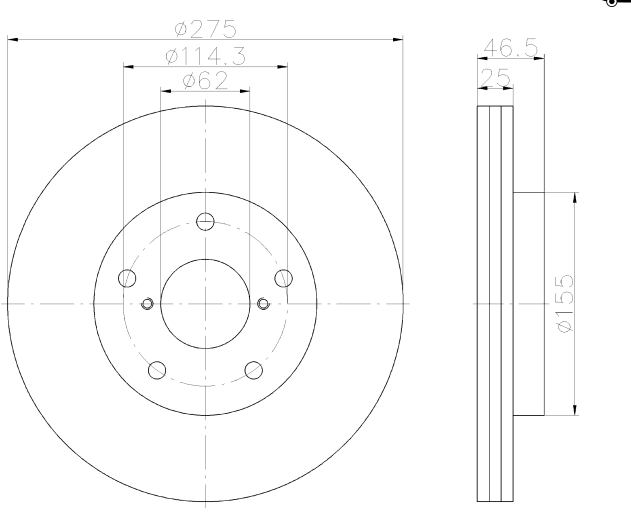

92232803

20 PRO

SUZUKI

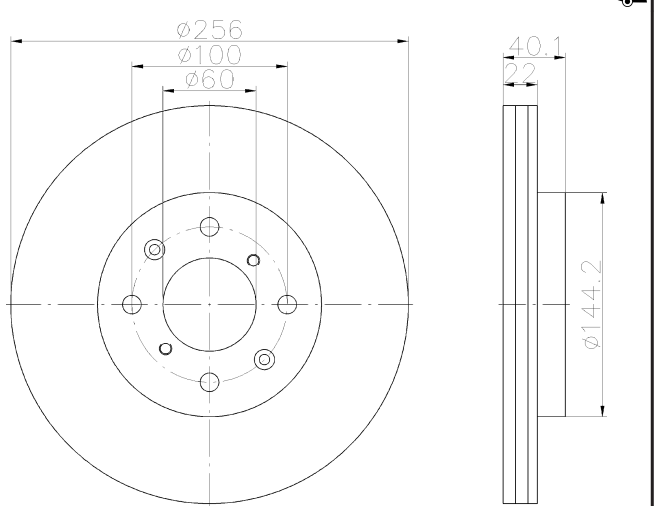

92233100

9.5 ABS

RENAULT

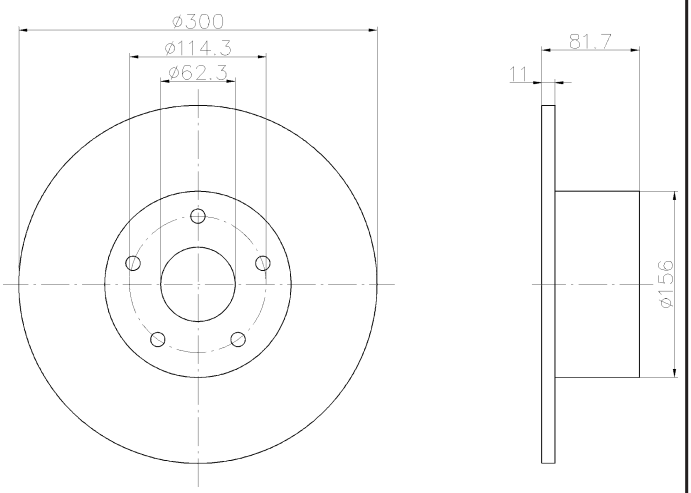

92234500

22.4

HYUNDAI

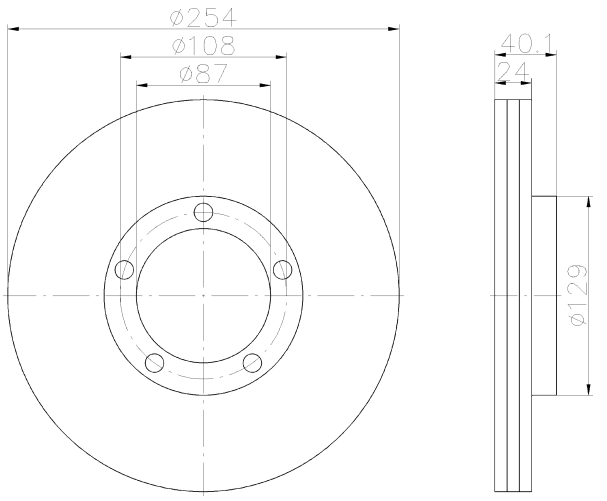

92234603

30 PRO

DAIMLER, JAGUAR

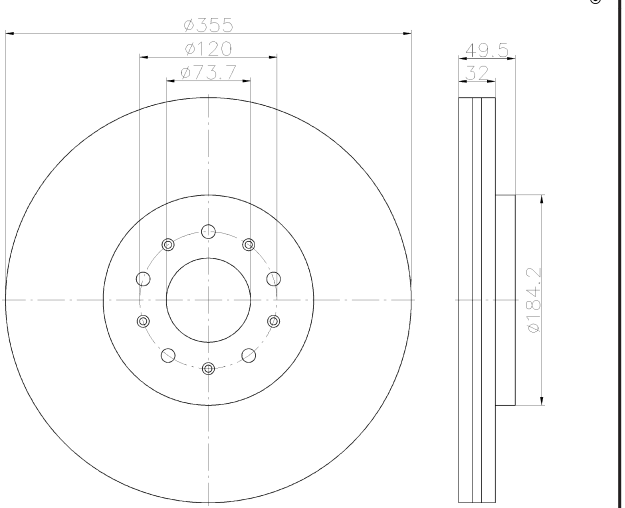

92234700

22

KIA

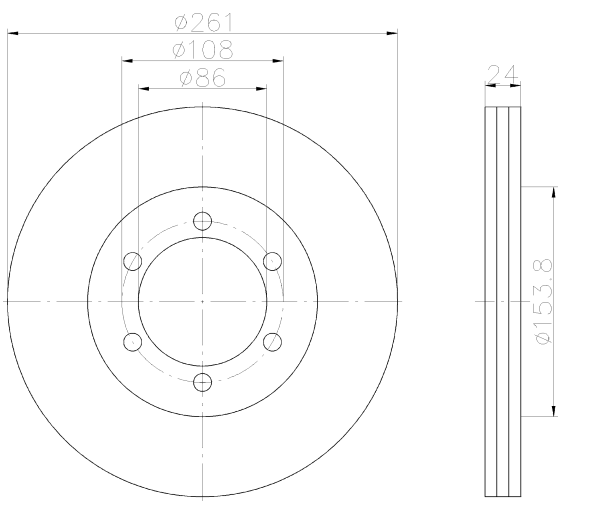

92234803

8.5 PRO

CHRYSLER

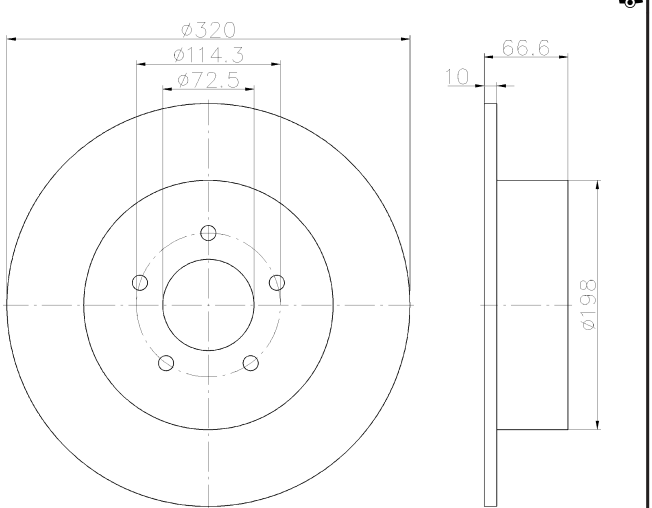

92234900

26

TOYOTA

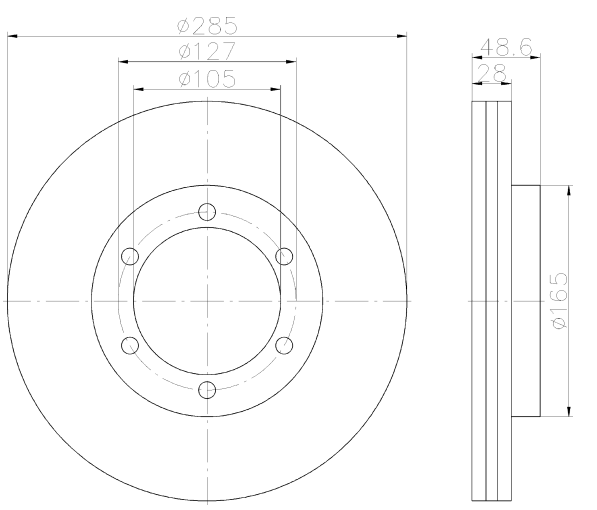

92235000

25

TOYOTA

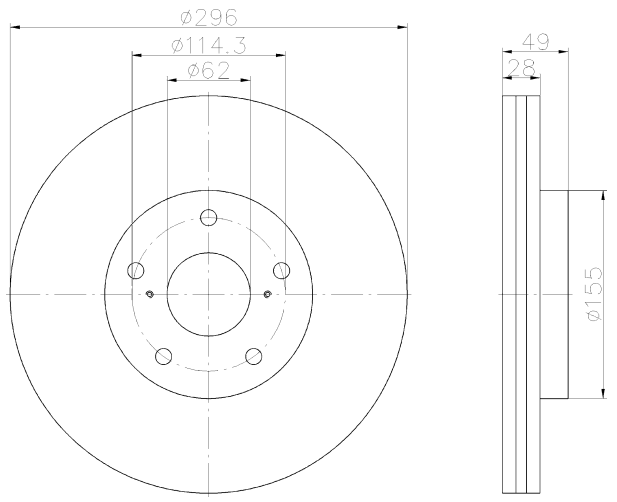

92235100

20

TOYOTA

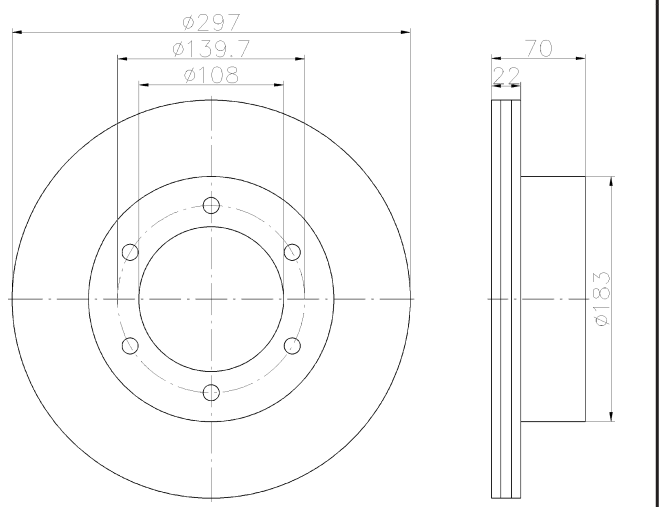

92235200

26

TOYOTA

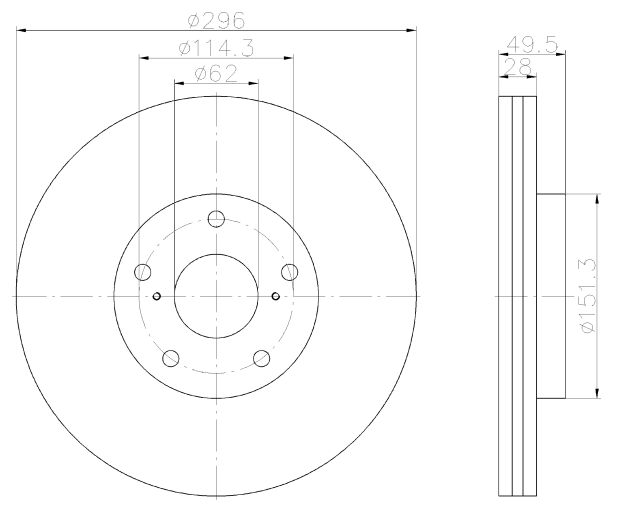

92235403

26.5 PRO

CHRYSLER

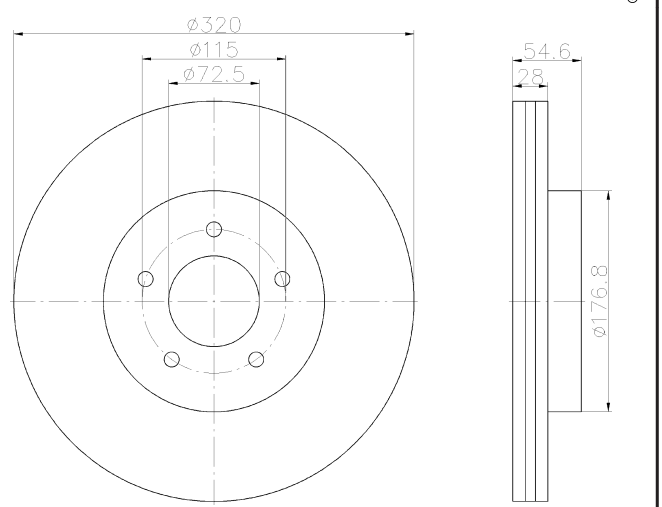

92235503

24.5 PRO

CHRYSLER

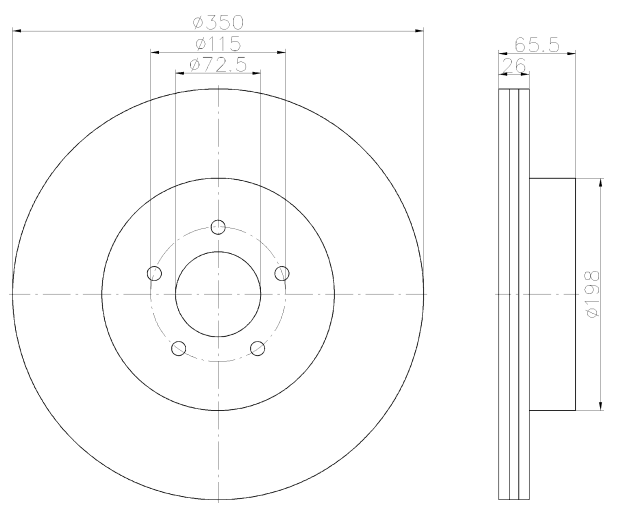

92235900

18

MAZDA

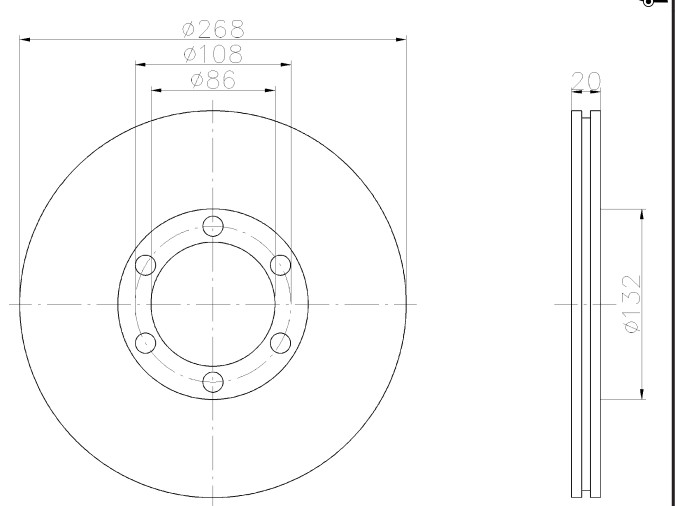

92236003

26 PRO

TOYOTA

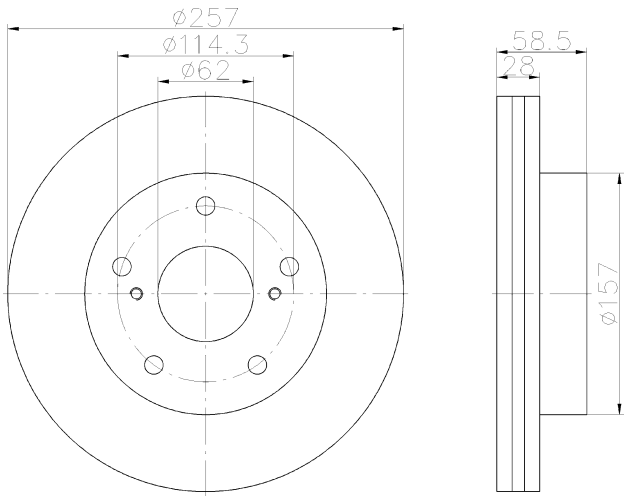

92236100

19

DACIA

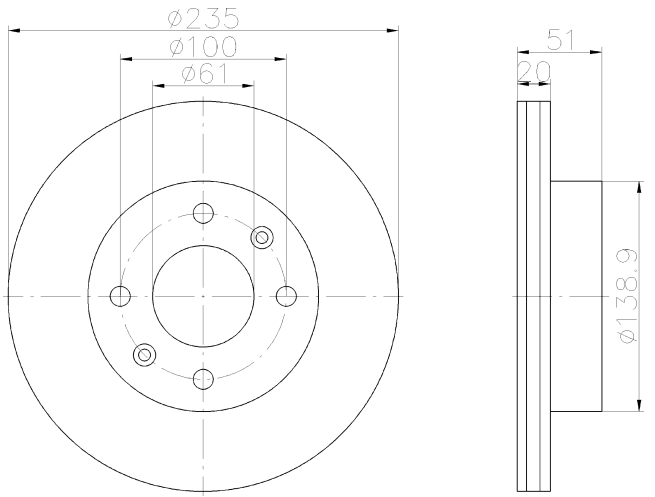

92236200

26

FORD ASIA / OZEANIA, MAZDA

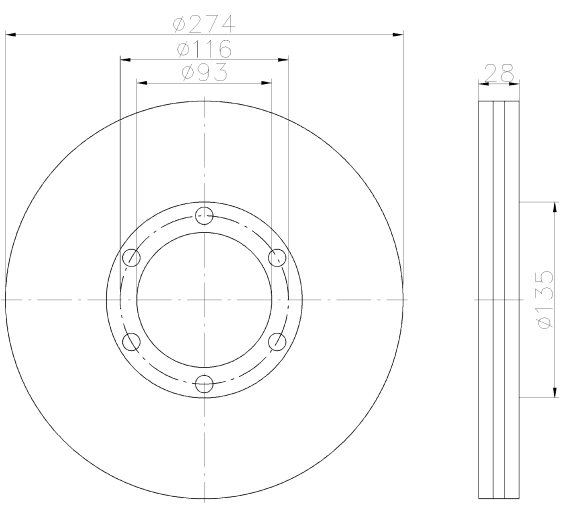

92236300

22

FORD ASIA / OZEANIA, FORD AUSTRALIA, MAZDA

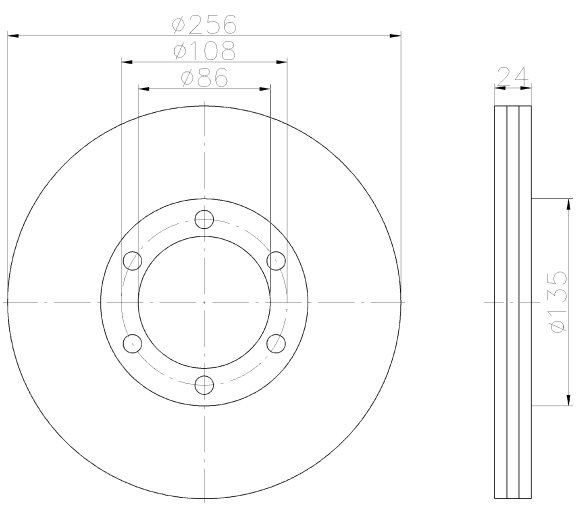

92236503

28 PRO

SUBARU

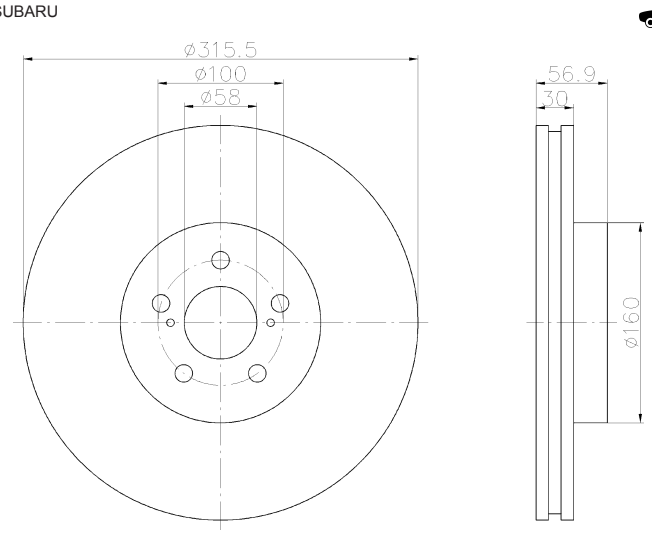

92236703

10.2 PRO

CHRYSLER, FIAT, LANCIA

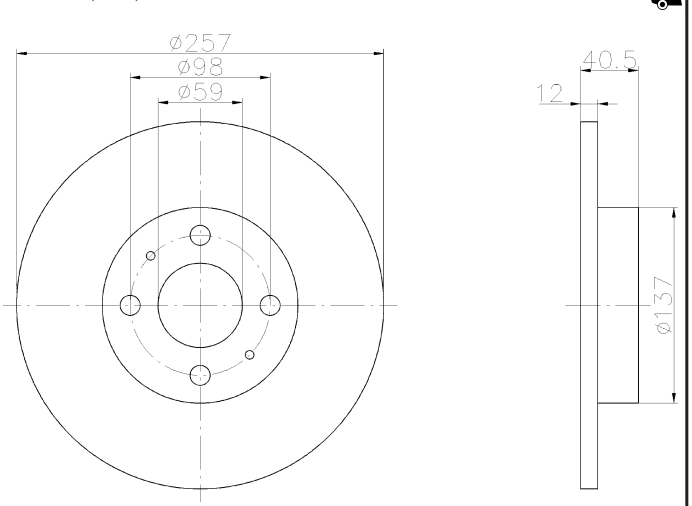

92237300

8

SUZUKI

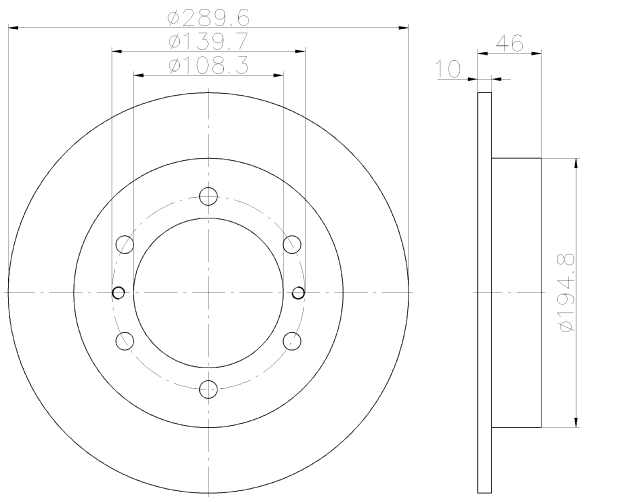

92237503

30 PRO

LEXUS, TOYOTA

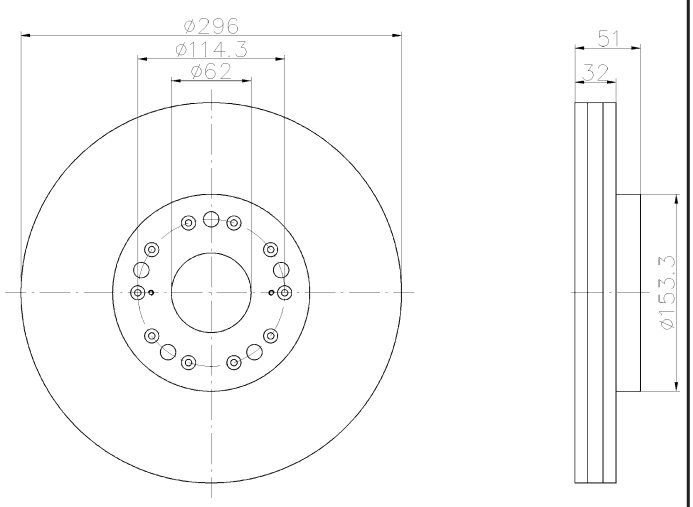

92237600

26

FIAT, OPEL, VAUXHALL

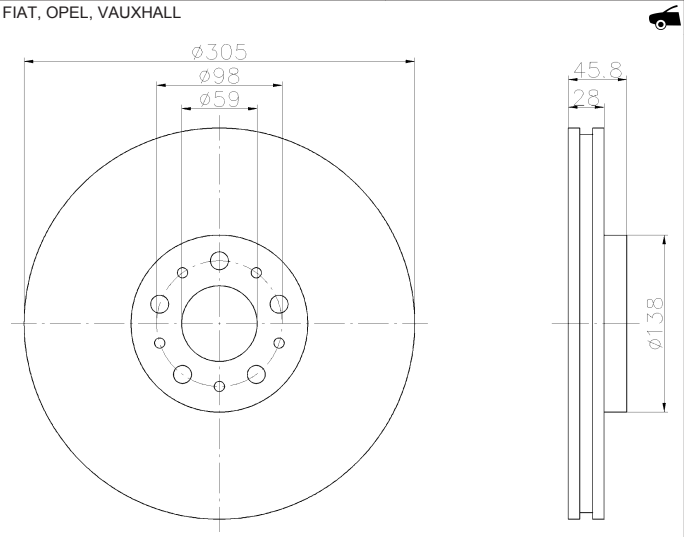

92237703

23 PRO

FORD, FORD AUSTRALIA

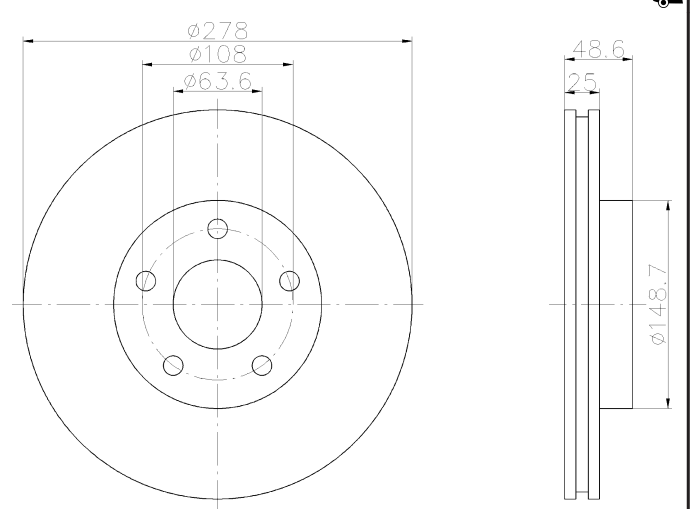

92237803

26.5 PRO

HYUNDAI, KIA

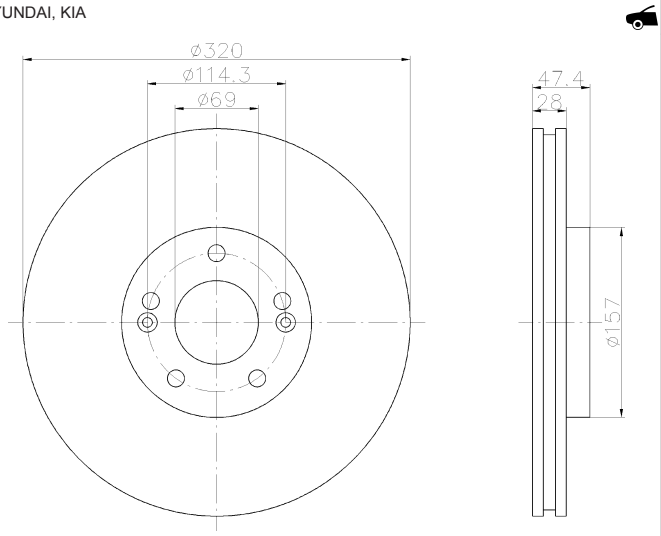

92237903

20 PRO

DODGE, HYUNDAI, KIA

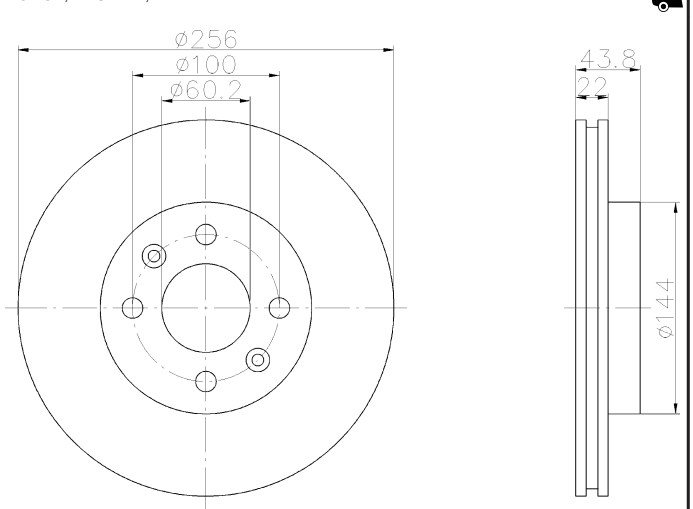

92238003

10 PRO

PEUGEOT

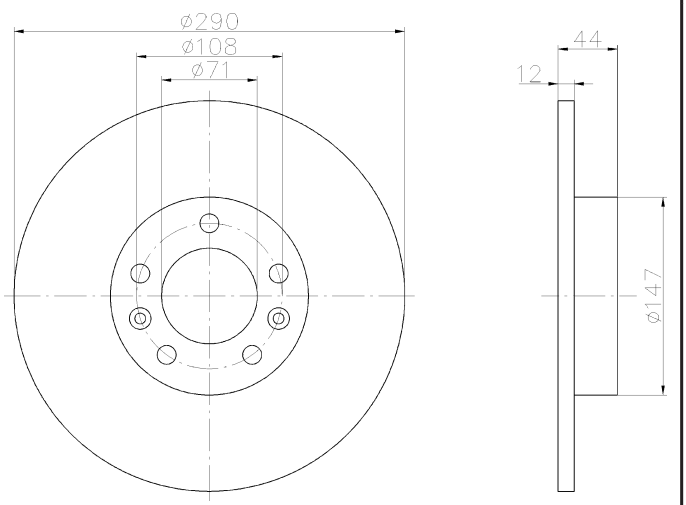

92238100

26

TOYOTA

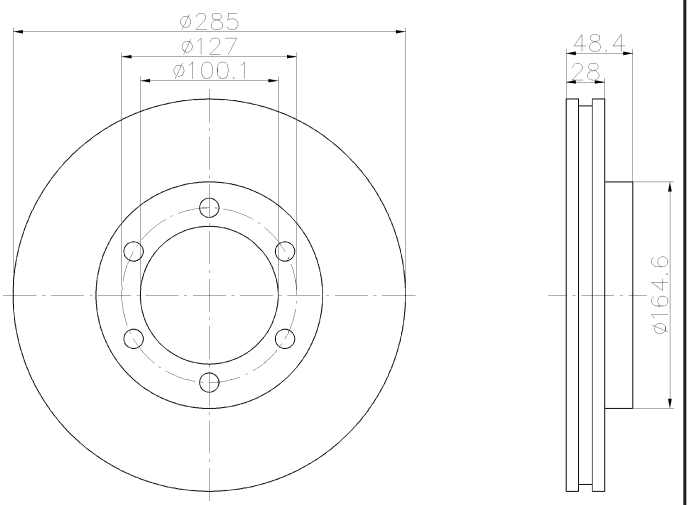

92238203

31.5 PRO

AUDI

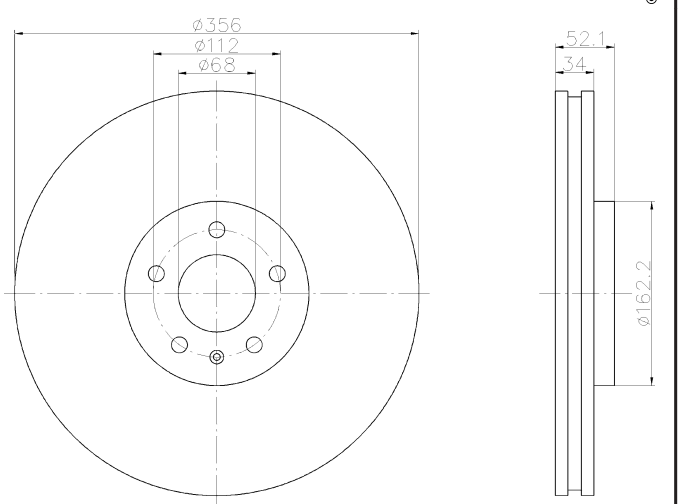

92238303

20 PRO

AUDI

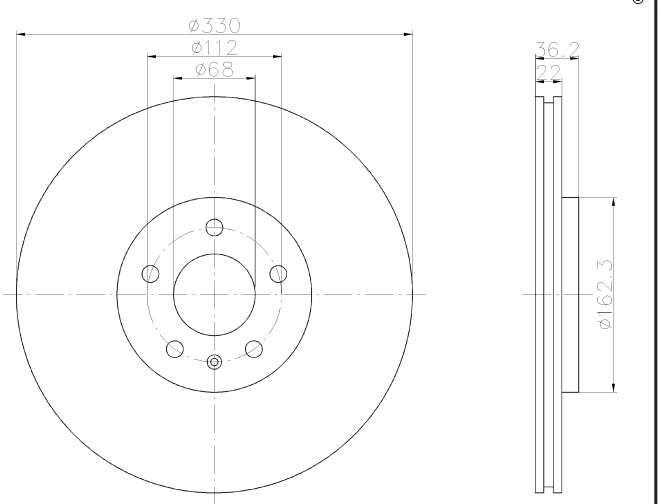

92238403

20.5 PRO

BMW

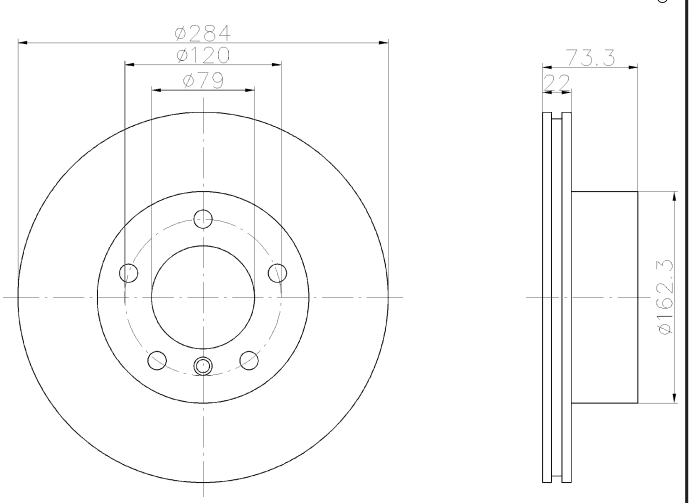

92238503

20.5 PRO

BMW, BMW (BRILLIANCE), CITROËN (DF-PSA)

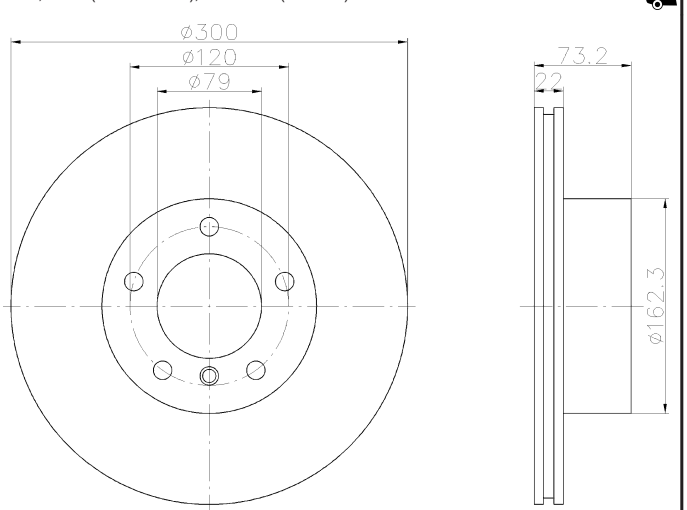

92238903

9 PRO

FORD, FORD AUSTRALIA

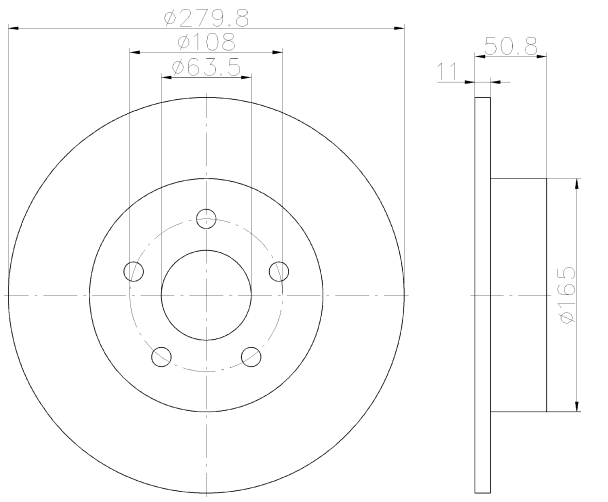

92239003

9 PRO

FORD, FORD AUSTRALIA

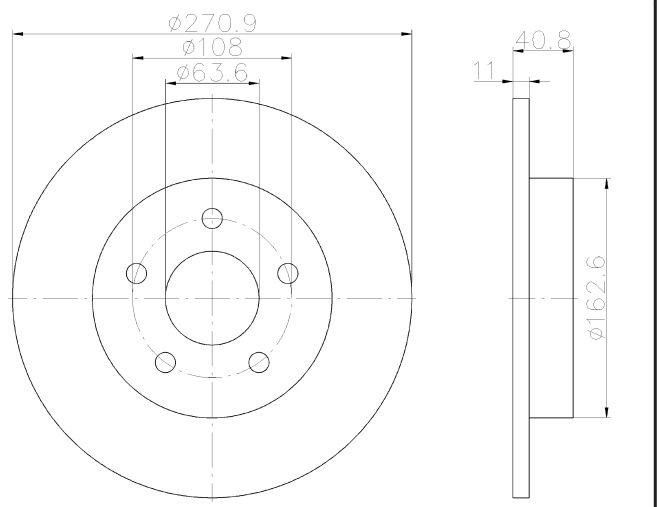

92239103

8.4 PRO

HYUNDAI

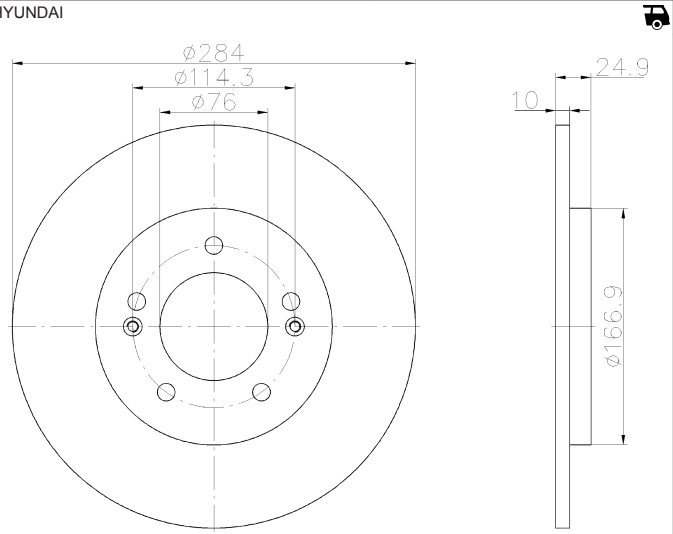

92239203

8.4 PRO

HYUNDAI

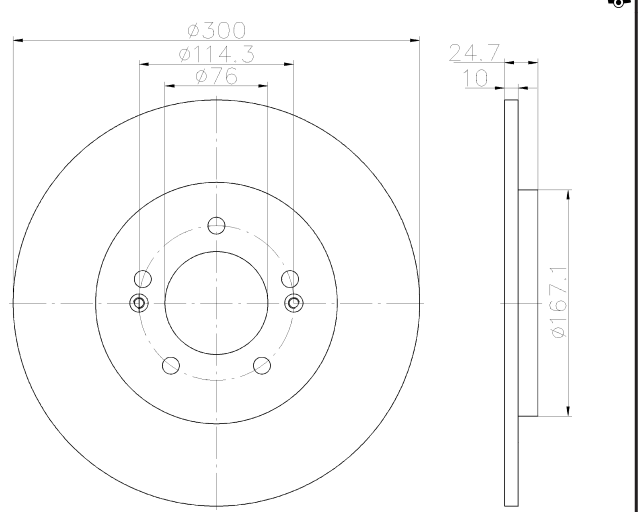

92239303

19.4 PRO

KIA

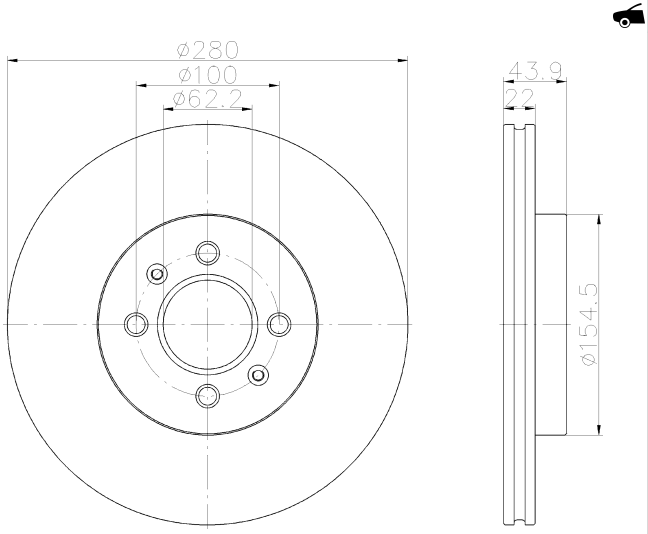

92239403

19 PRO

SEAT, SKODA, VOLKSWAGEN

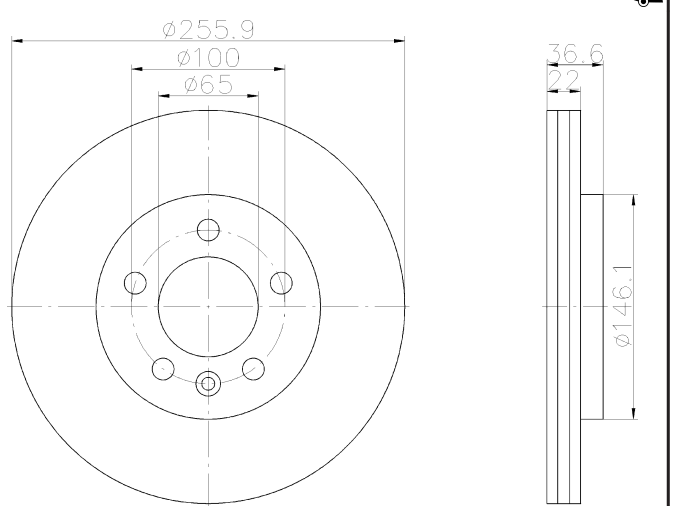

92239600

9.5 ABS

RENAULT

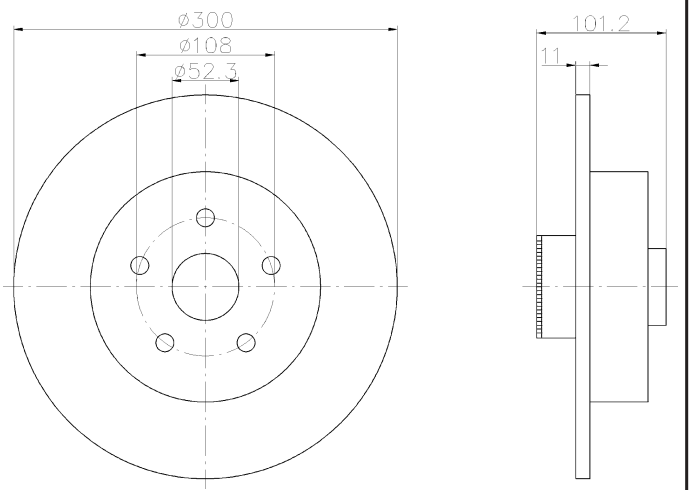

92239703

18.4 PRO

BMW, BMW (BRILLIANCE)

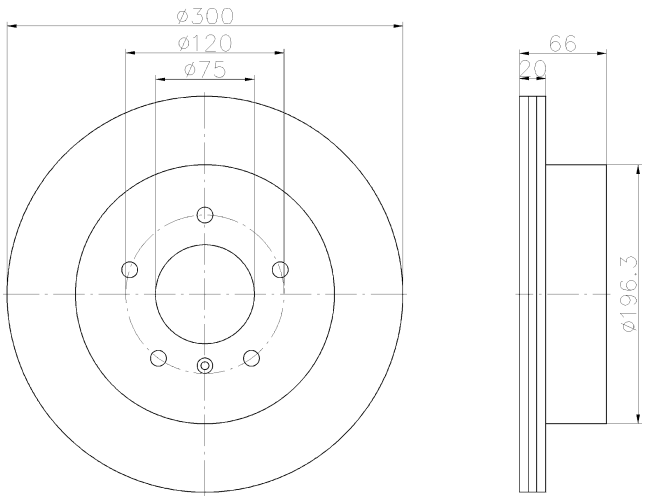

92239803

20 PRO

OPEL, VAUXHALL

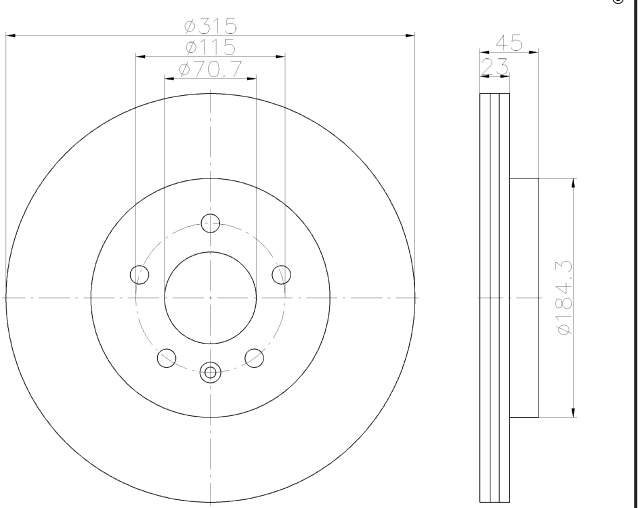

92239903

20 PRO

NISSAN, RENAULT

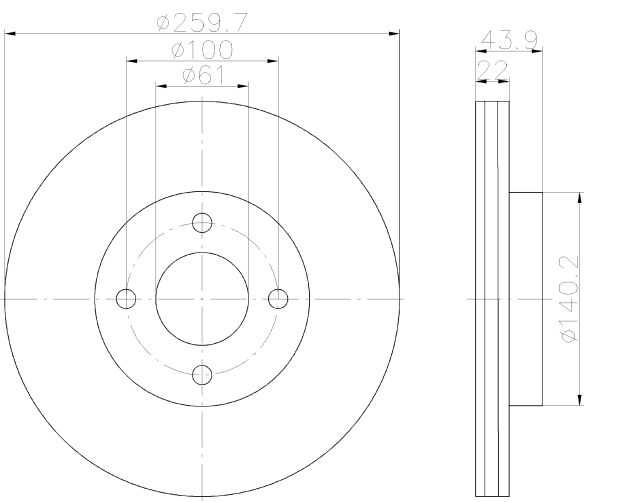

92240003

8.4 PRO

HYUNDAI

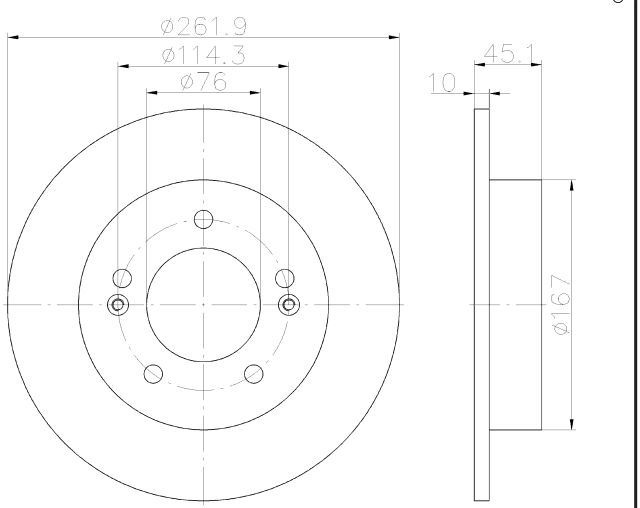

92240103

30 PRO

MERCEDES-BENZ

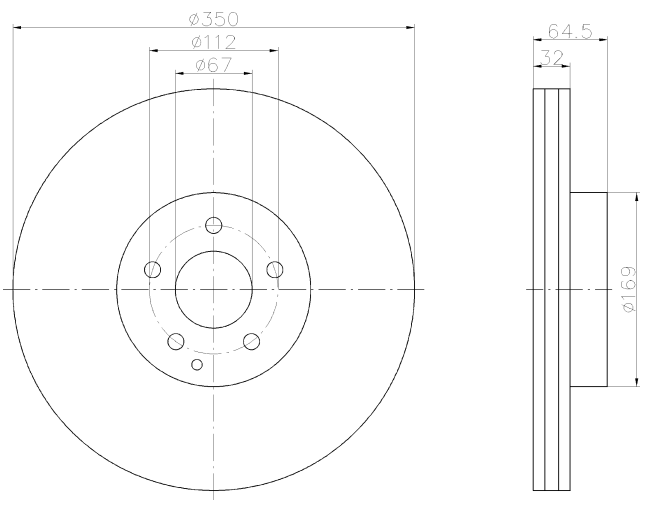

92240203

8.5 PRO

TOYOTA

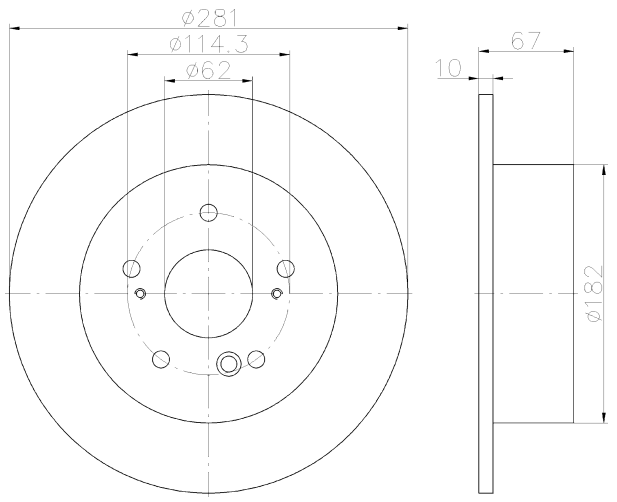

92240703

24 PRO

HYUNDAI

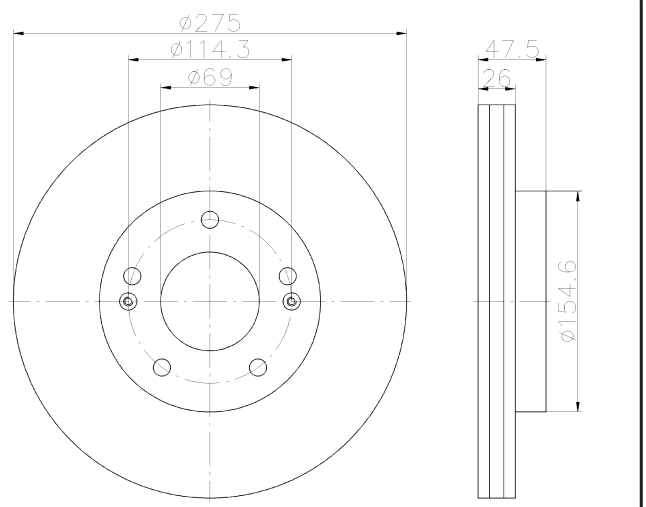

92240803

8.4 PRO

HYUNDAI

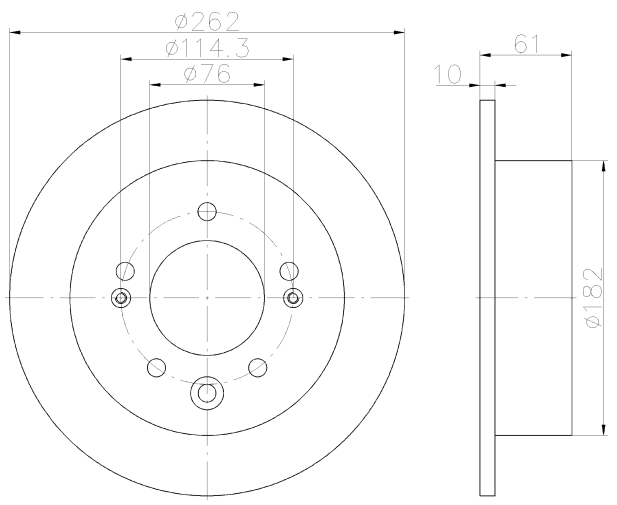

92241303

7.3 PRO

MERCEDES-BENZ

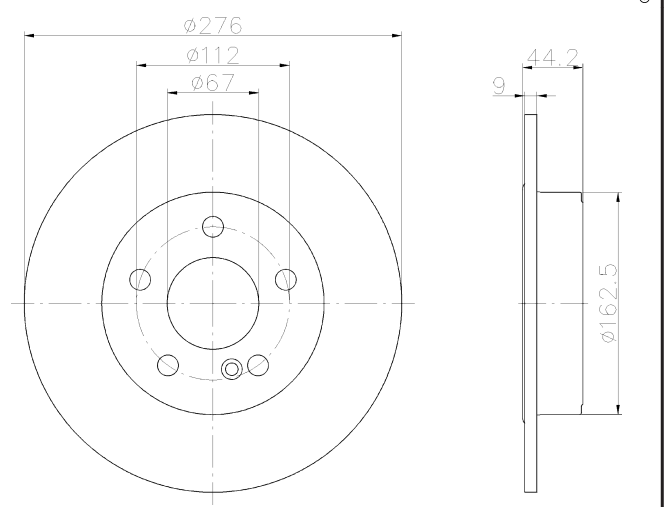

92241400

21

CHEVROLET, CHEVROLET (SGM), HOLDEN

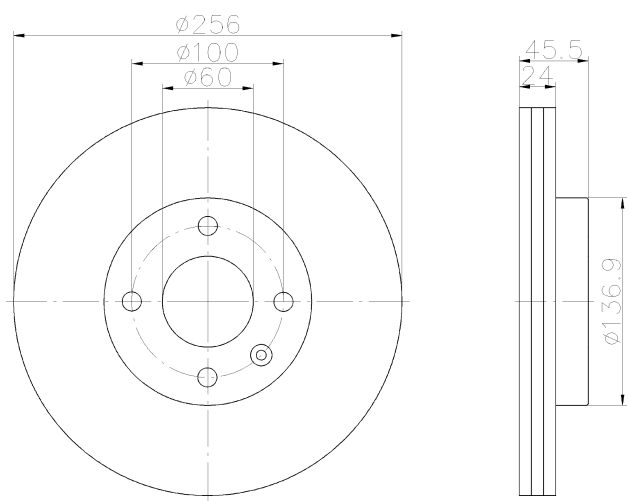

92241503

19.8 PRO

RENAULT

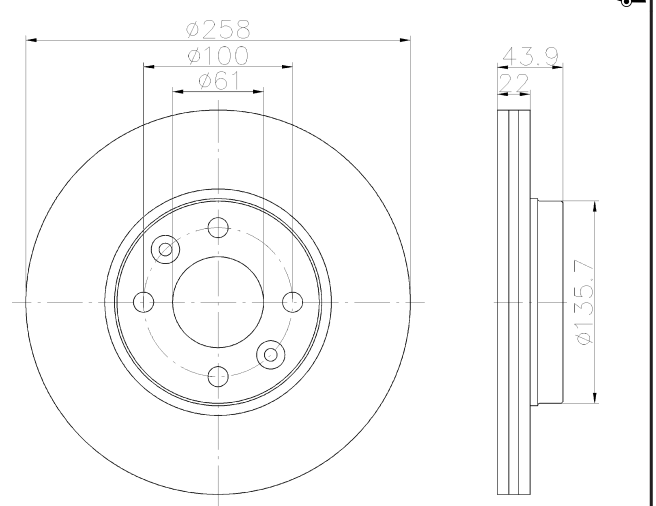

92241603

25.4 PRO

MERCEDES-BENZ

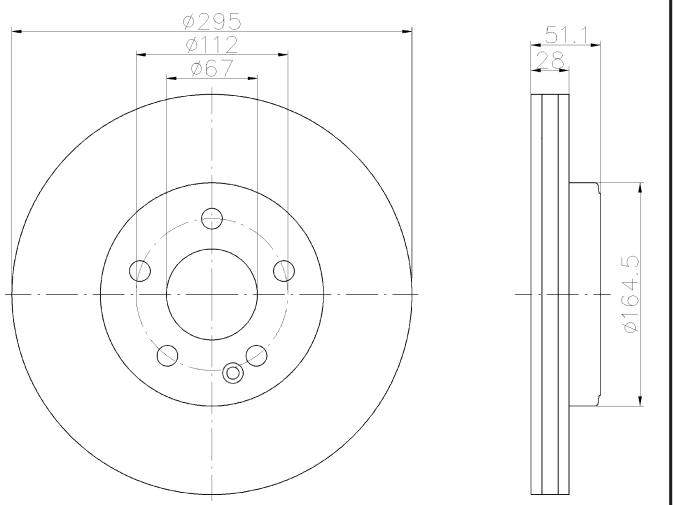

92241903

18.4 PRO

BMW, BMW (BRILLIANCE)

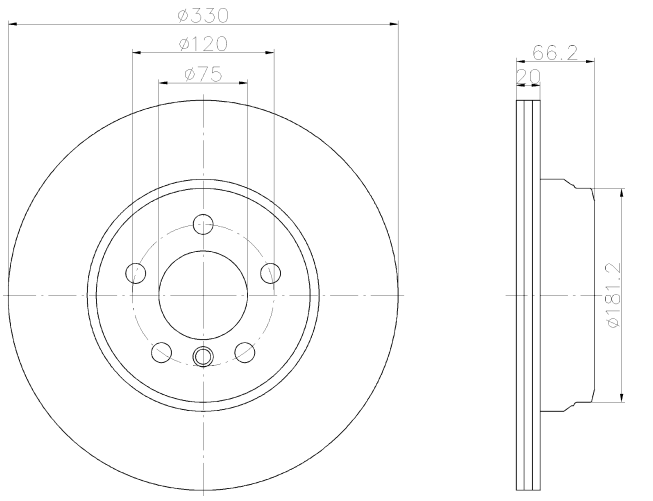

92242003

22.4 PRO

BMW, BMW (BRILLIANCE)

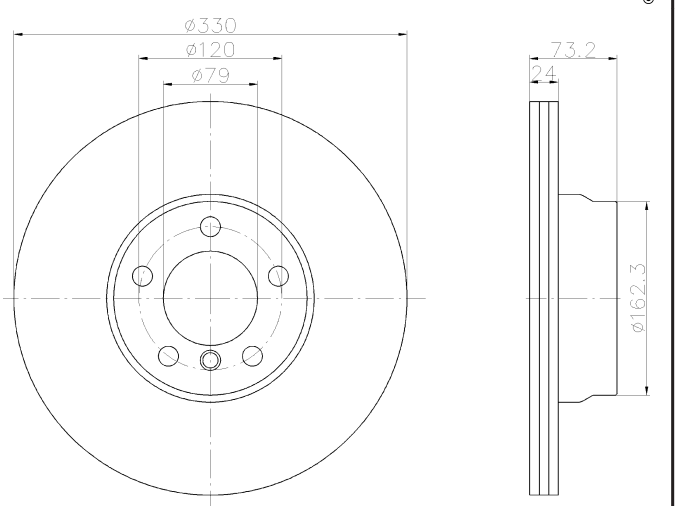

92242100

7 ABS

RENAULT

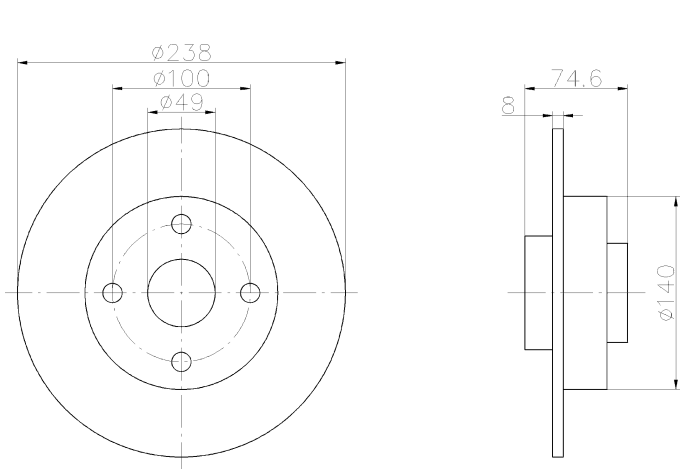

92242203

8.4 PRO

DODGE, HYUNDAI, KIA

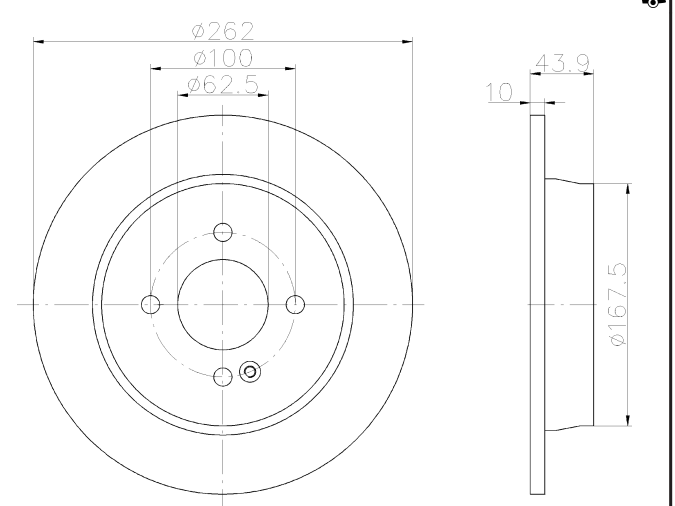

92242303

8 PRO

SUZUKI

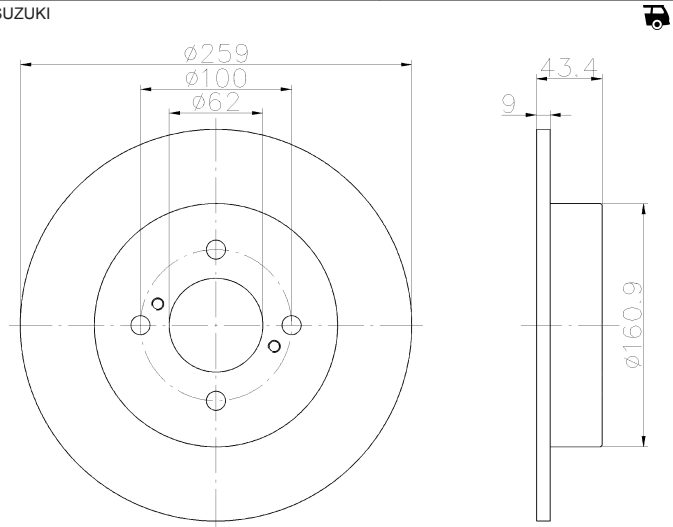

92242403

27.5 PRO

OPEL, SAAB, VAUXHALL

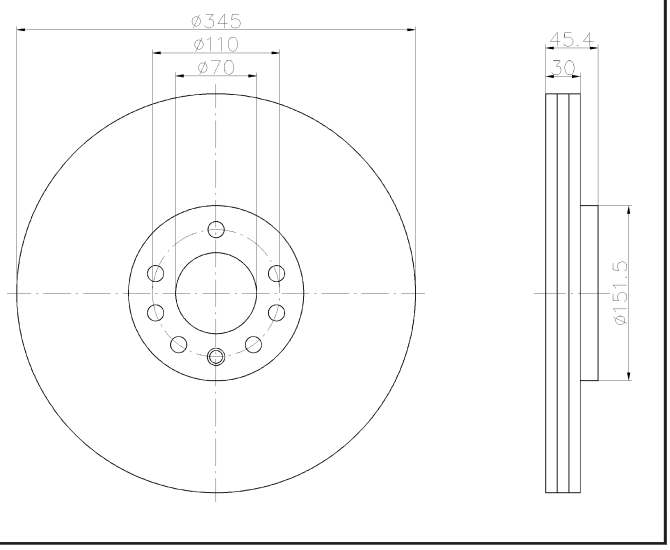

92242603

16.4 PRO

HYUNDAI

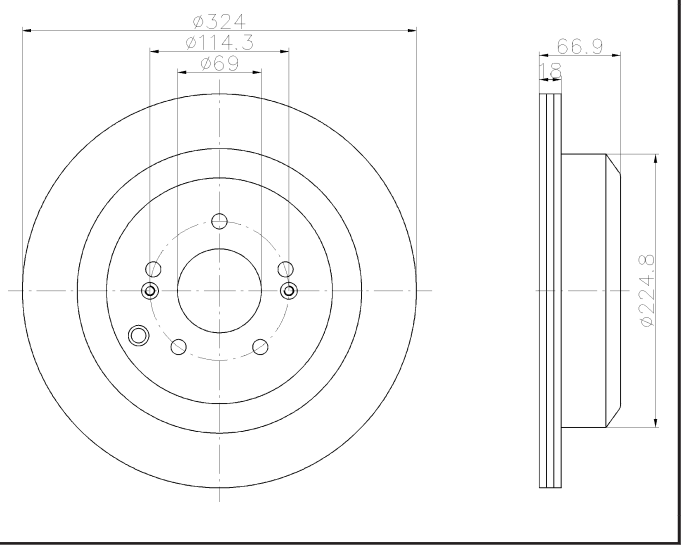

92242703

8 PRO

MAZDA

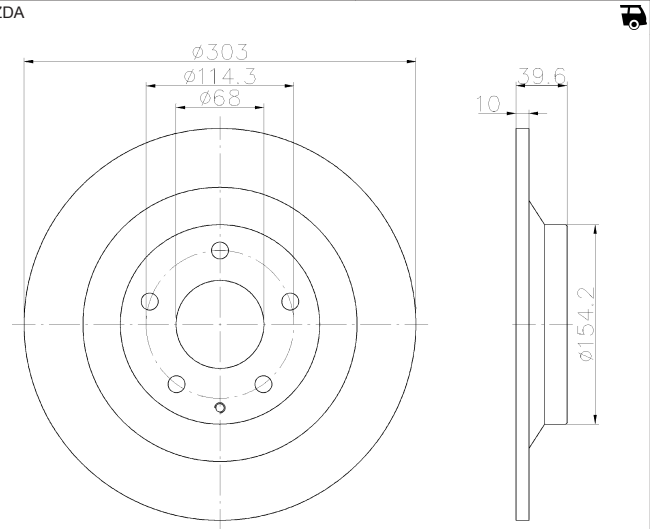

92242803

16 PRO

MAZDA

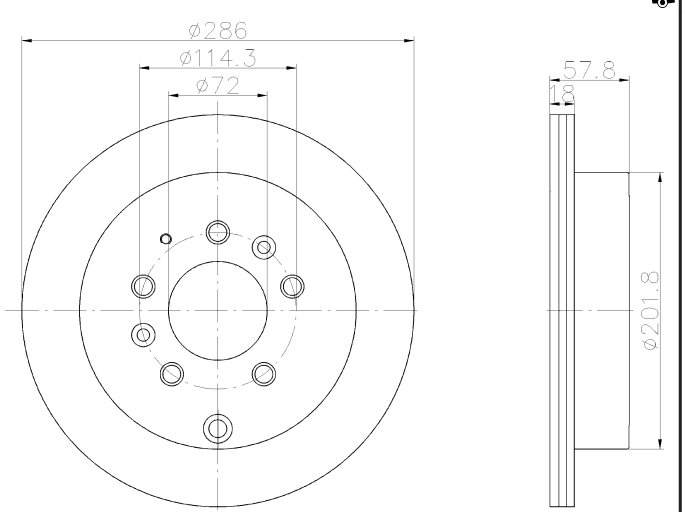

92243103

21.4 PRO

HYUNDAI, KIA

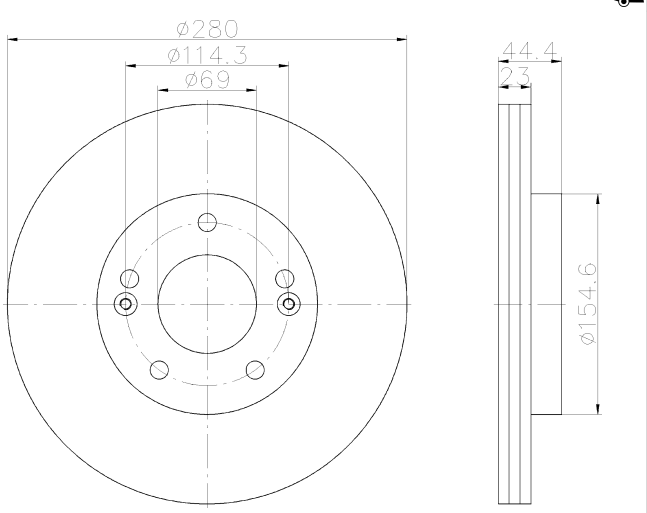

92243203

21 PRO

HYUNDAI

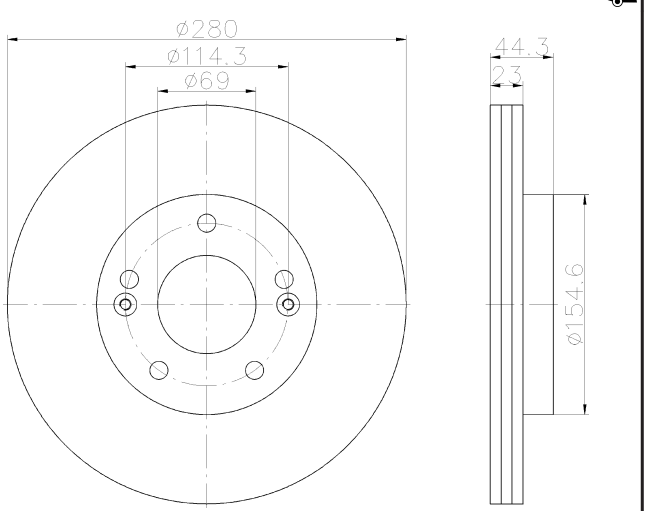

92243303

23 PRO

CHEVROLET, HOLDEN, OPEL, VAUXHALL

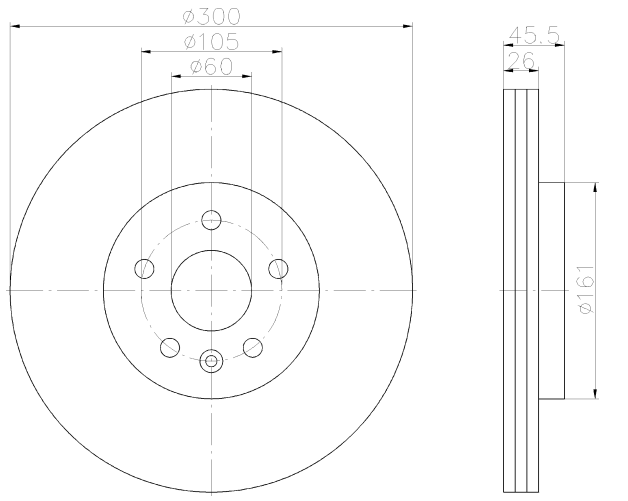

92243703

18 PRO

SUBARU

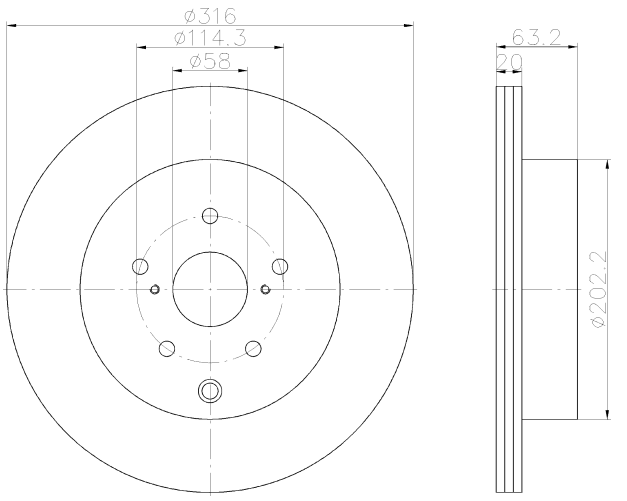

92244303

8 PRO

FIAT

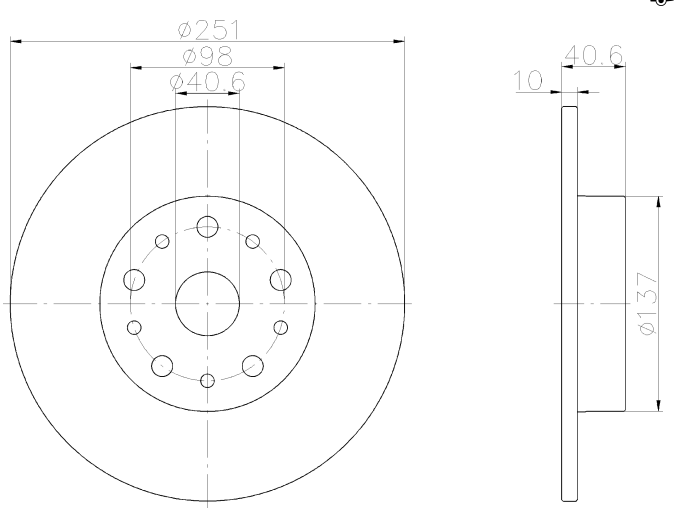

92244403

8.4 PRO

KIA

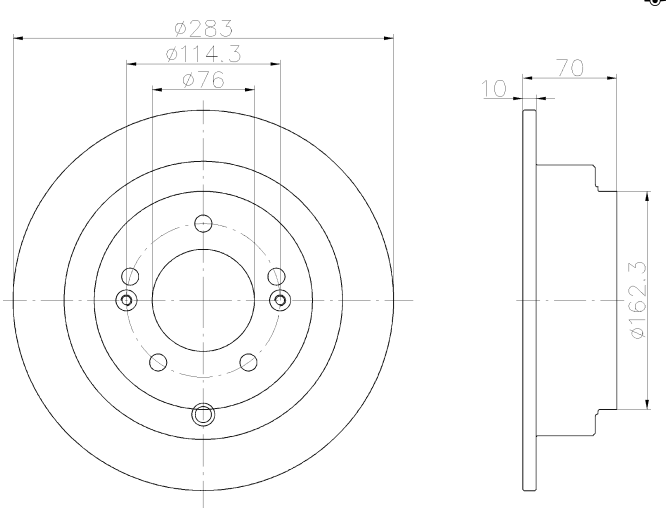

92252403

21 PRO

FORD

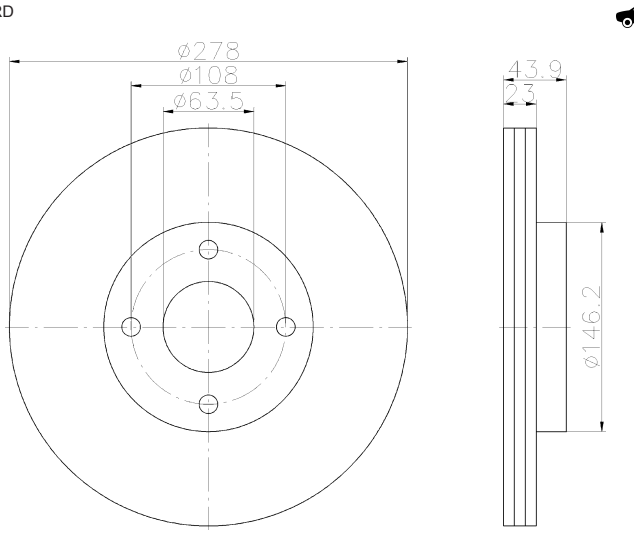

92252503

23 PRO

HONDA

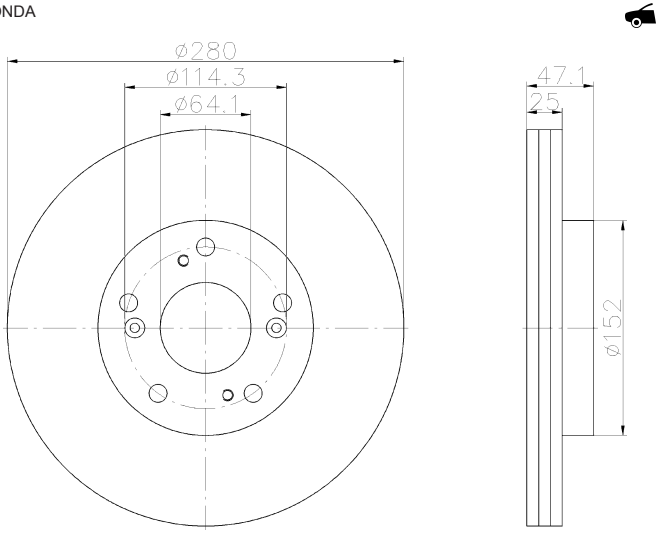

92252603

8 PRO

HONDA

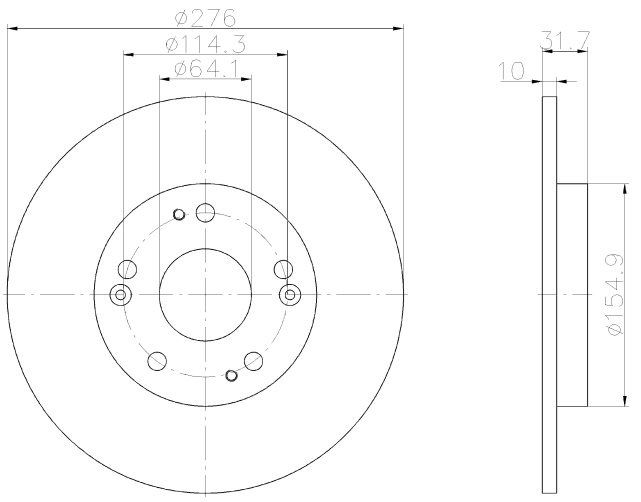

92252703

8.4 PRO

HYUNDAI, KIA

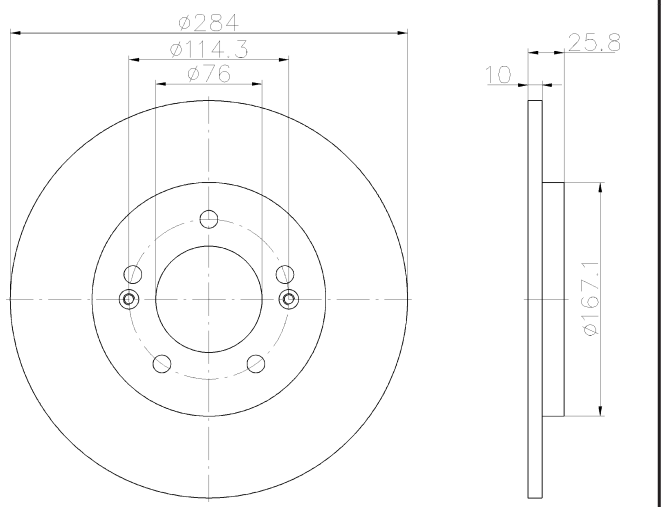

92252803

20 PRO

CHRYSLER, FIAT, LANCIA

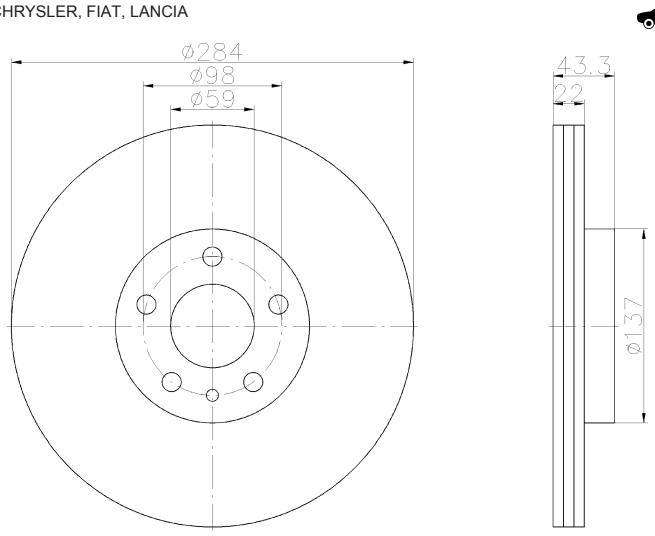

92253103

24 PRO

NISSAN

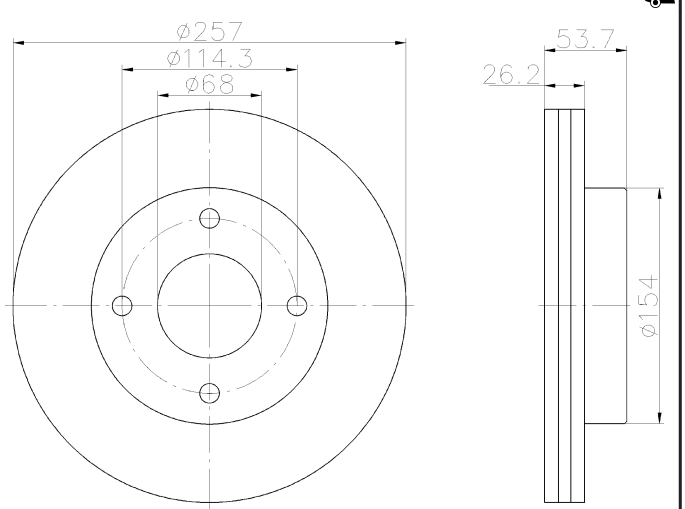

92253303

26.4 PRO

JEEP

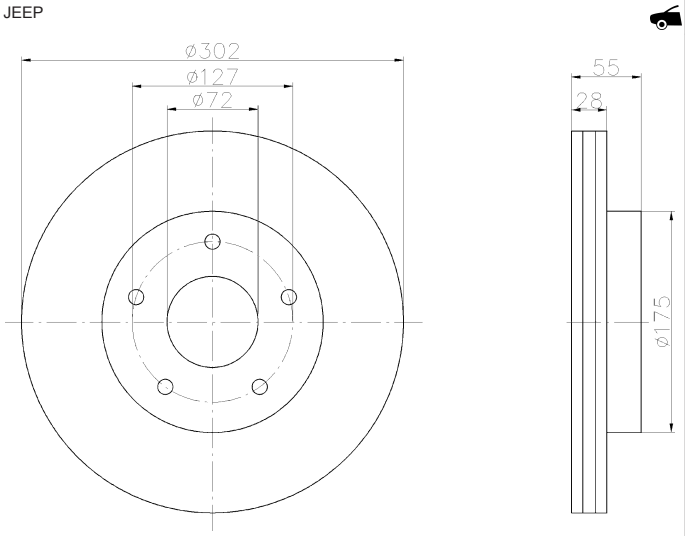

92253403

30 PRO

FORD, FORD AUSTRALIA

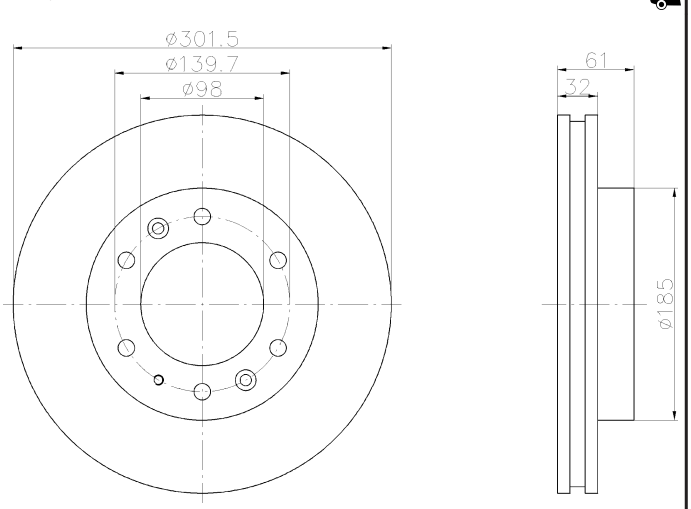

92253603

26.4 PRO

HYUNDAI

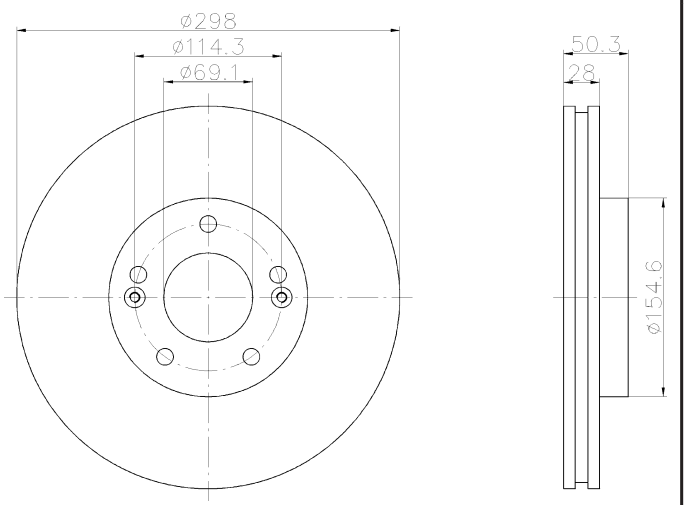

92253703

34.4 PRO

BMW

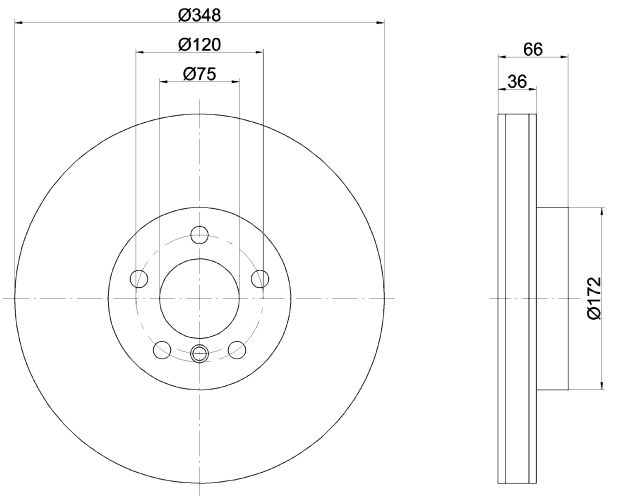

92253903

22.4 PRO

BMW

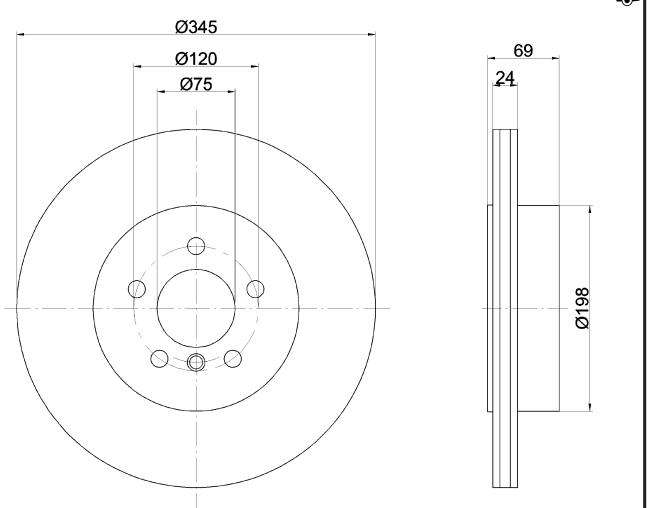

92254003

17 PRO

DAIHATSU, TOYOTA

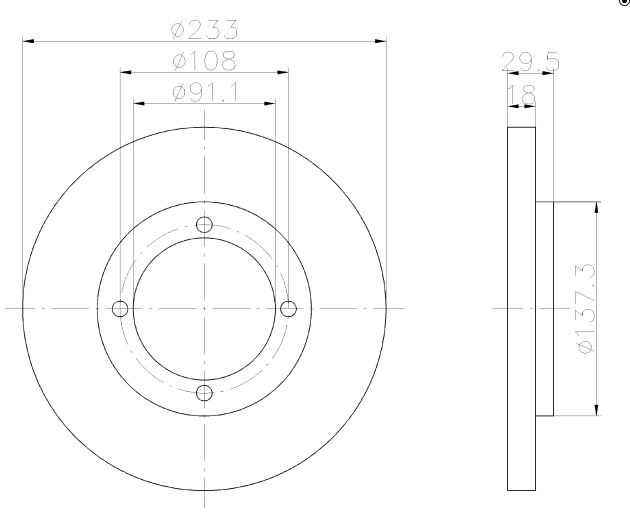

92254100

9.5 ABS

RENAULT

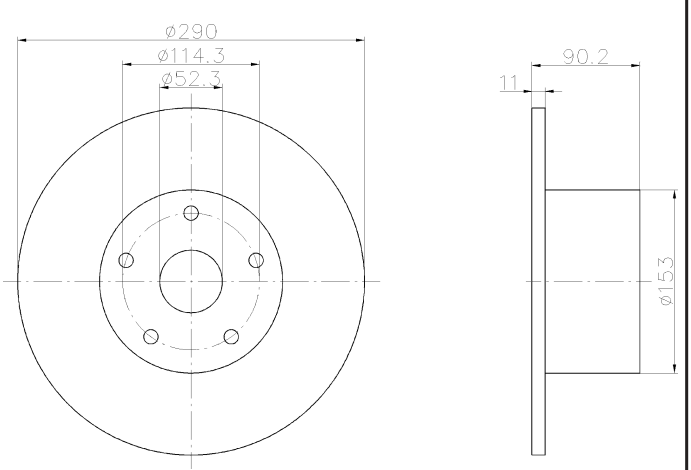

92254603

21.8 PRO

DACIA

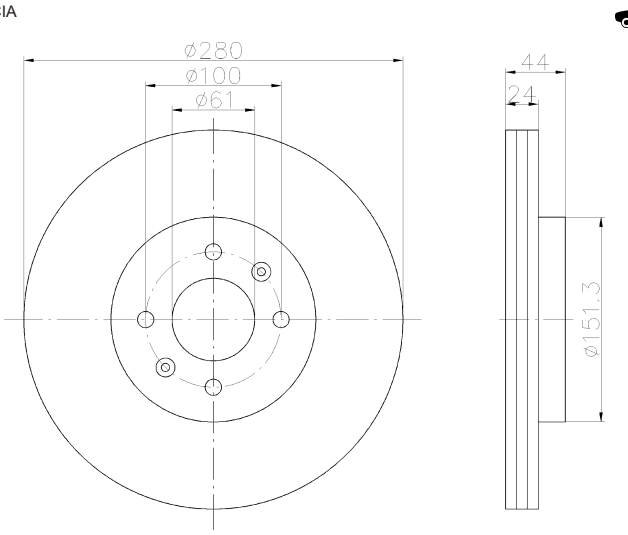

92254703

8 PRO

MAZDA

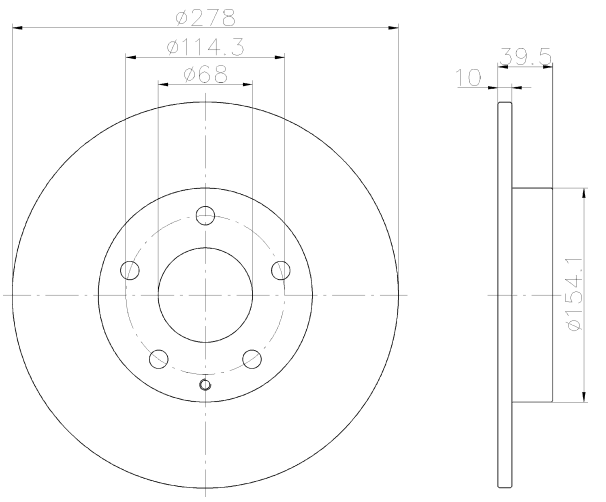

92254803

25.4 PRO

MERCEDES-BENZ

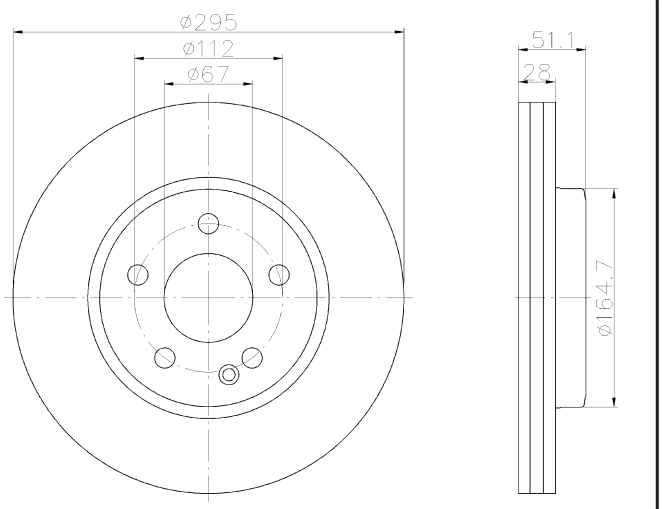

92254903

8.3 PRO

MERCEDES-BENZ

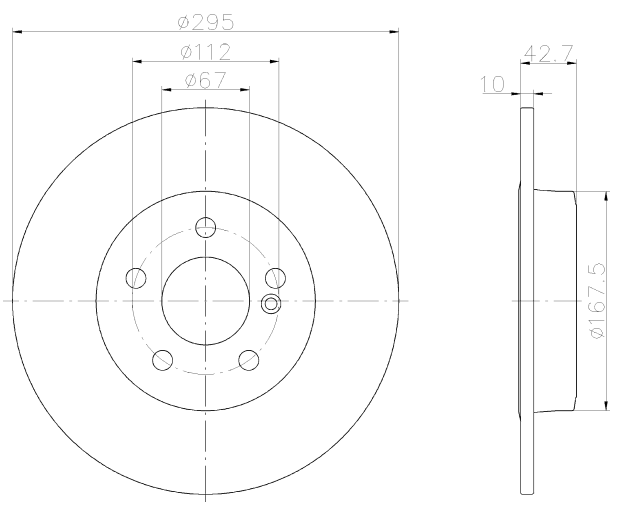

92255003

20.4 PRO

MINI

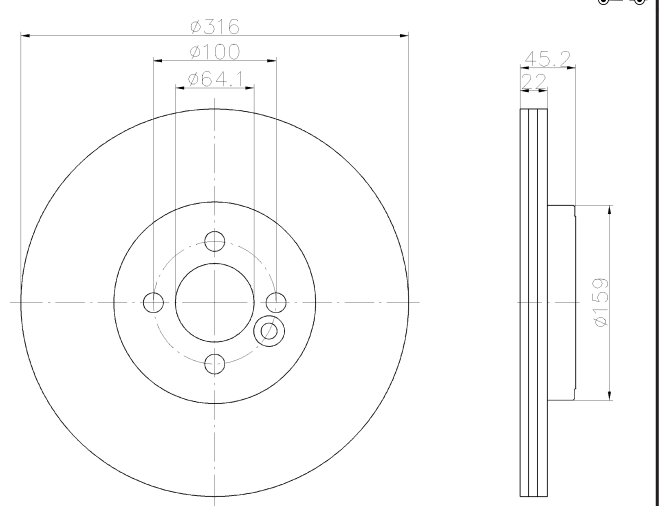

92255103

8.4 PRO

MITSUBISHI, PEUGEOT

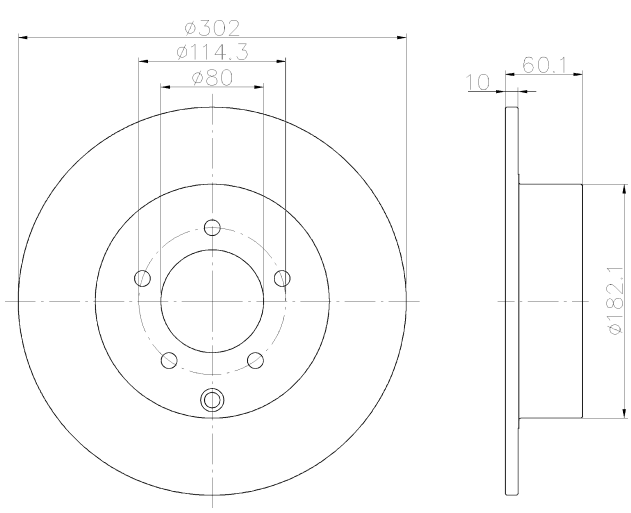

92255203

19.8 PRO

RENAULT

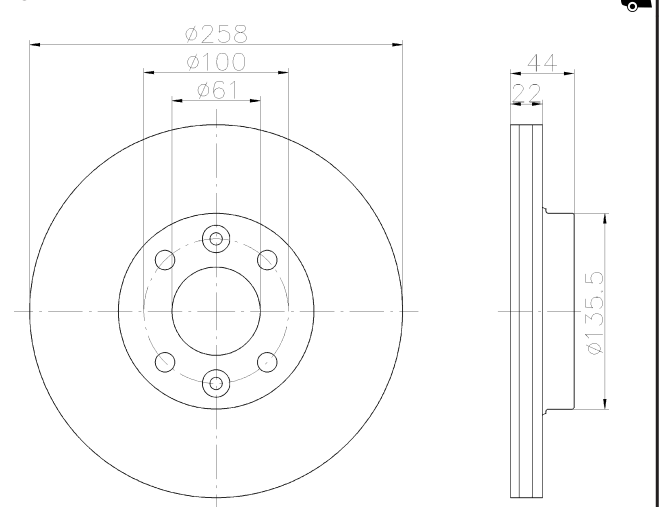

92255303

20 PRO

SUZUKI

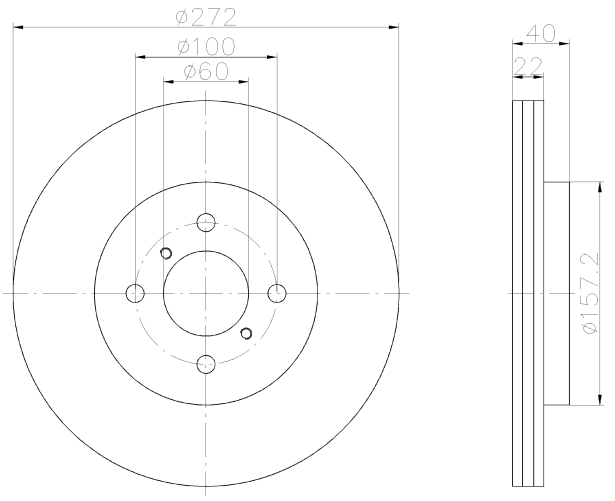

92255403

10 PRO

VOLKSWAGEN

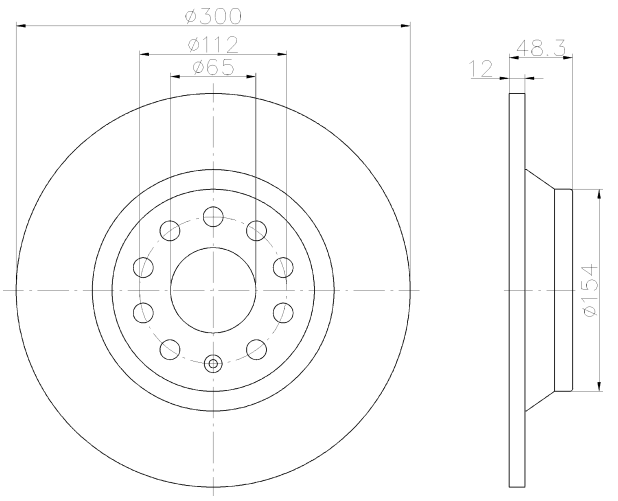

92255503

23 PRO

VOLVO

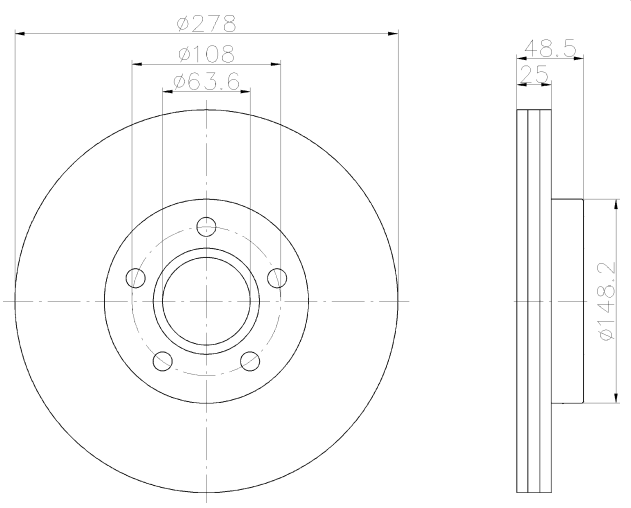

92255603

9 PRO

VOLVO

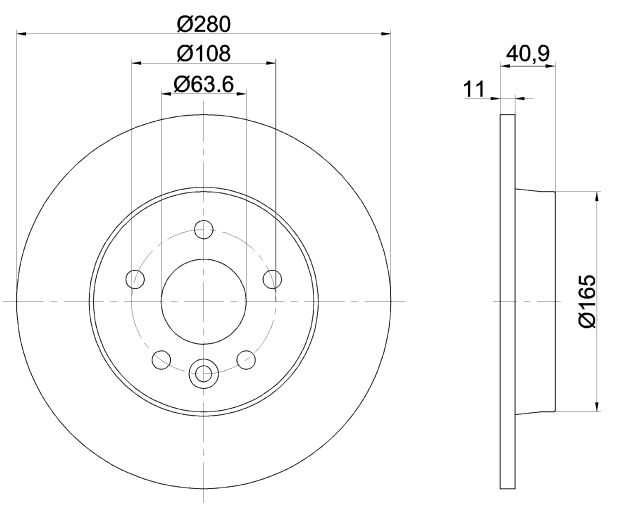

92255703

23 PRO

VOLVO

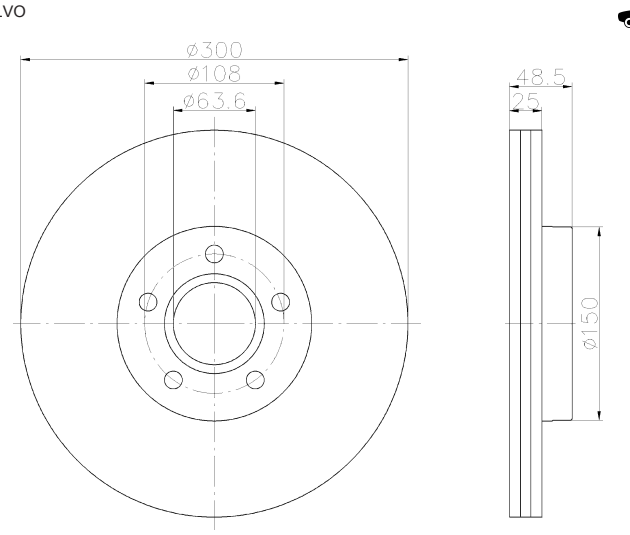

92256003

28 PRO

CITROËN, PEUGEOT

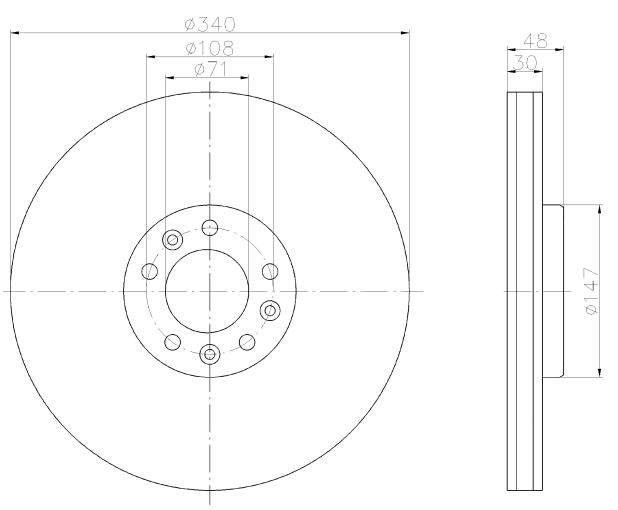

92256303

18.4 PRO

BMW

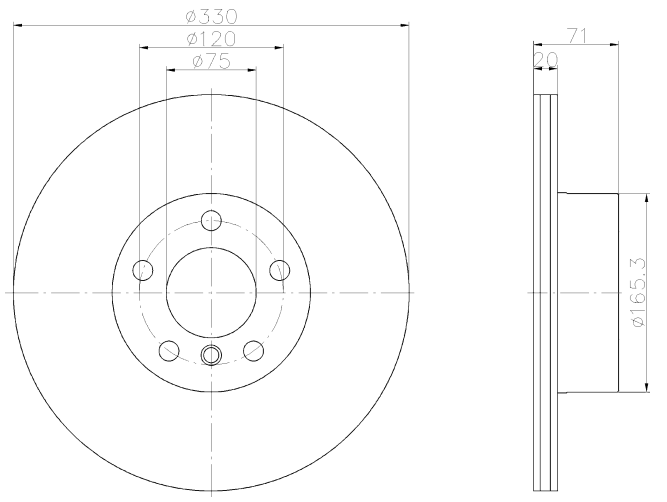

92256803

27 PRO

OPEL, VAUXHALL

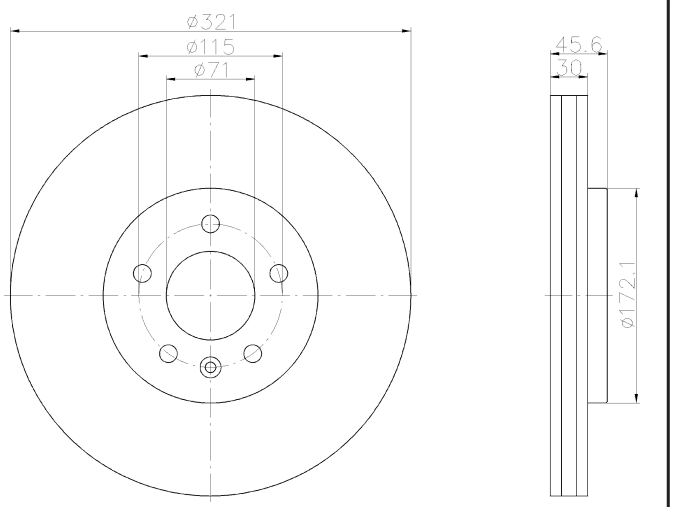

92256903

28 PRO

CITROËN, PEUGEOT

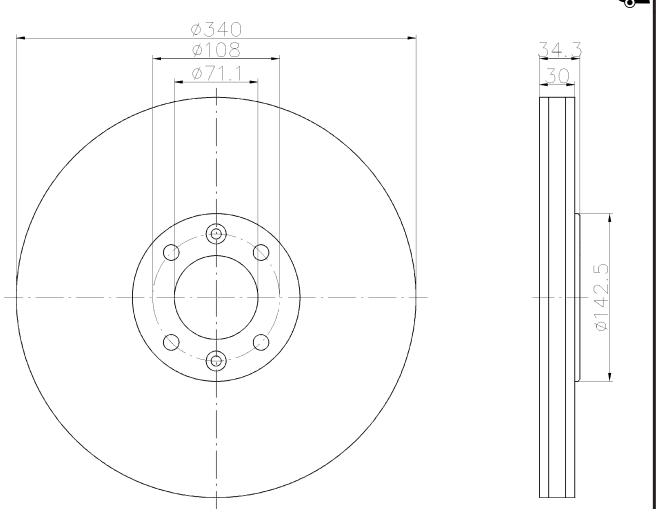

92257003

22.4 PRO

MERCEDES-BENZ

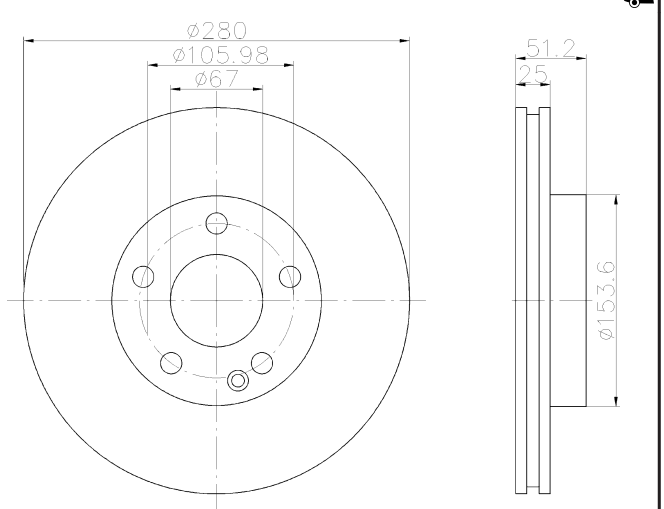

92257103

26.4 PRO

BMW

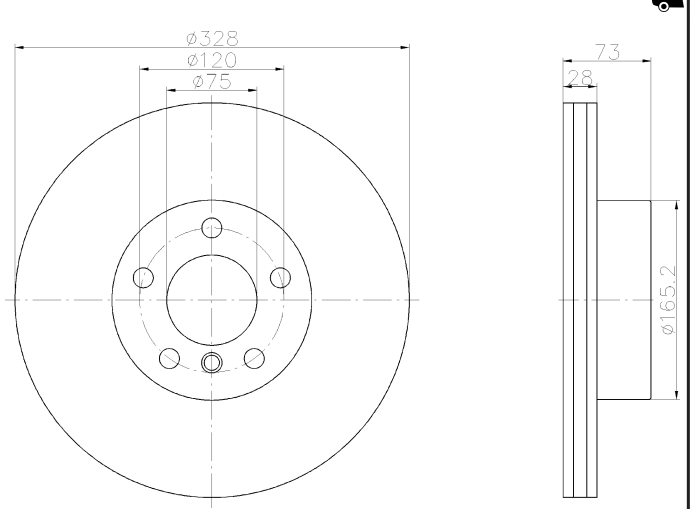

92257303

23 PRO

HONDA

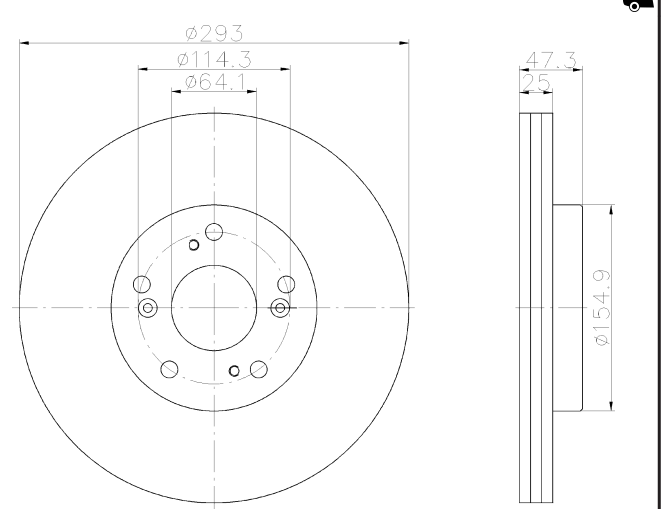

92257403

26 PRO

MAZDA

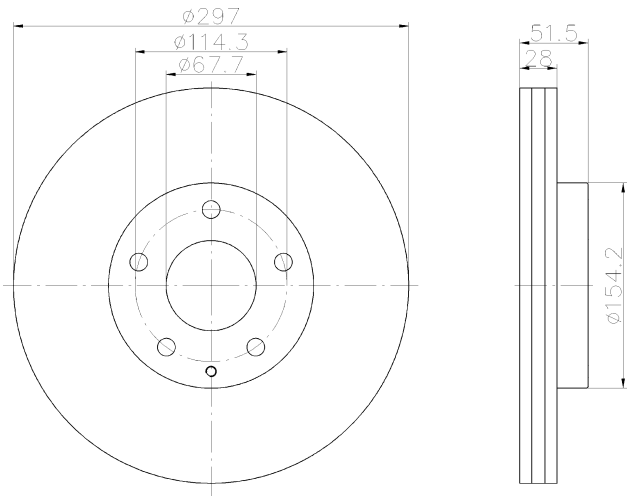

92257503

26 PRO

MERCEDES-BENZ

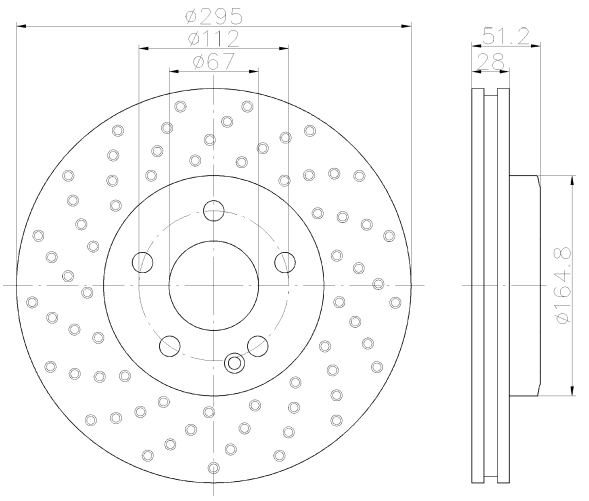

92257603

24.4 PRO

CITROËN, MITSUBISHI, PEUGEOT

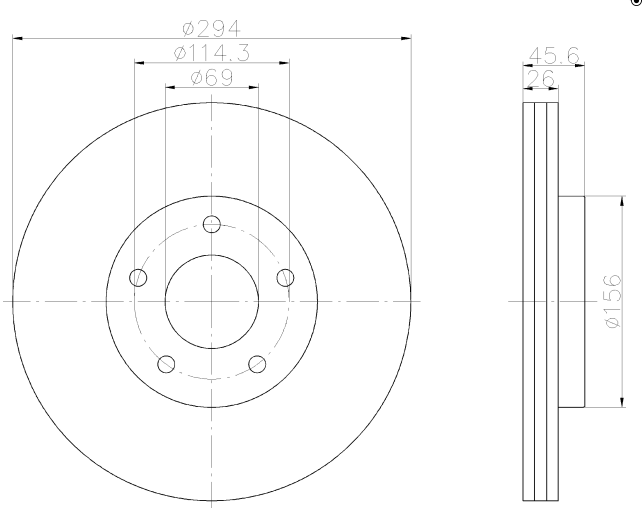

92257703

23 PRO

TOYOTA

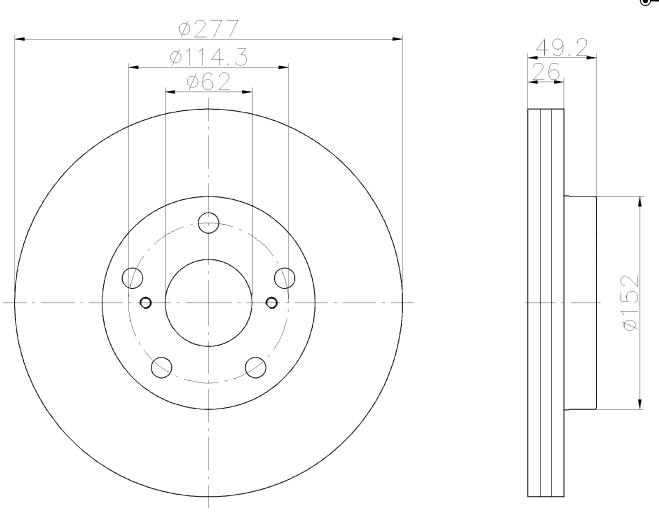

92257803

8.5 PRO

LEXUS, TOYOTA

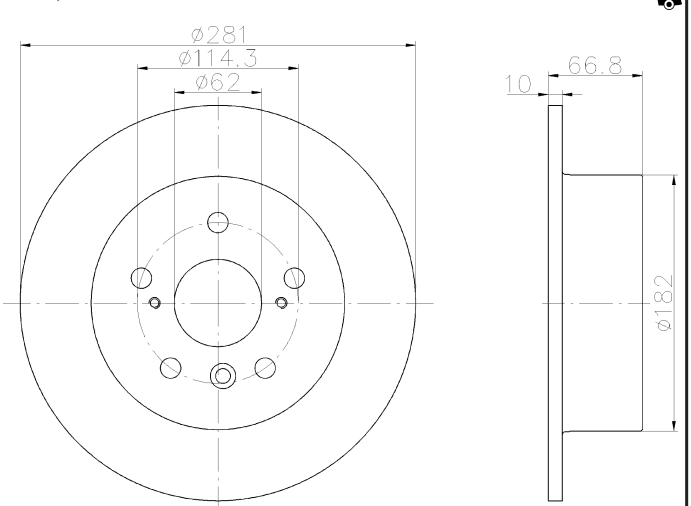

92257903

23.8 PRO

MERCEDES-BENZ

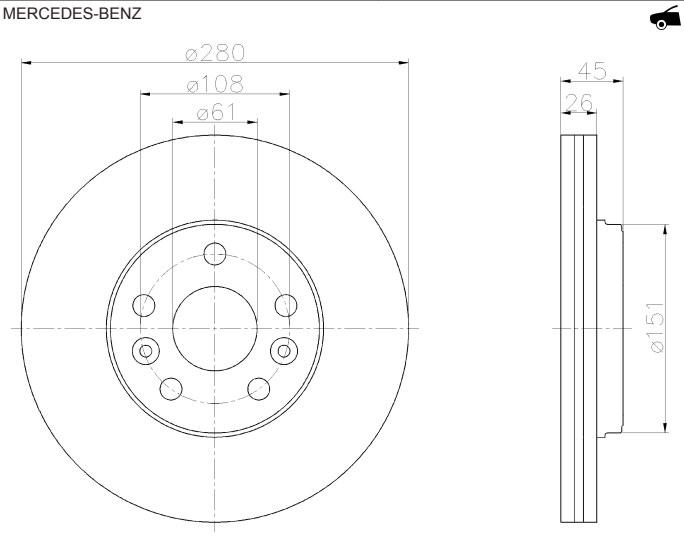

92258003

27.4 PRO

MERCEDES-BENZ

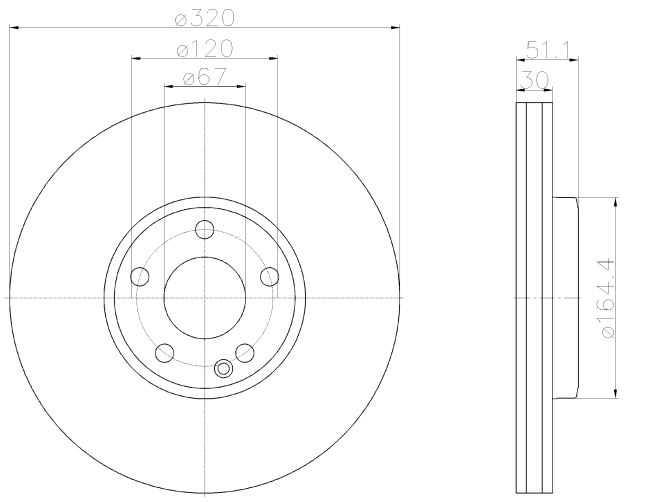

92261003

9.4 PRO

BMW

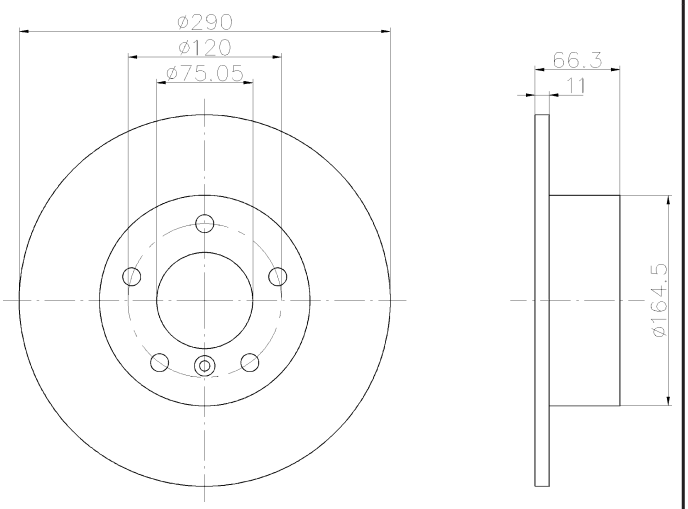

92261100

30.7

CADILLAC

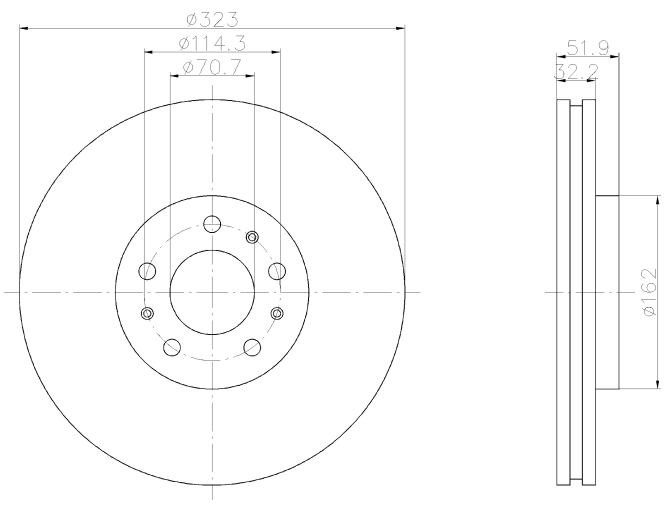

92261200

23

TOYOTA

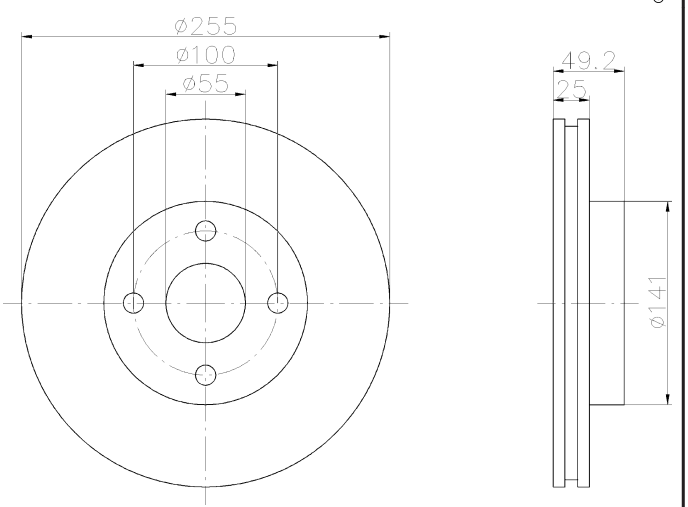

92261403

24.2 PRO

LANCIA

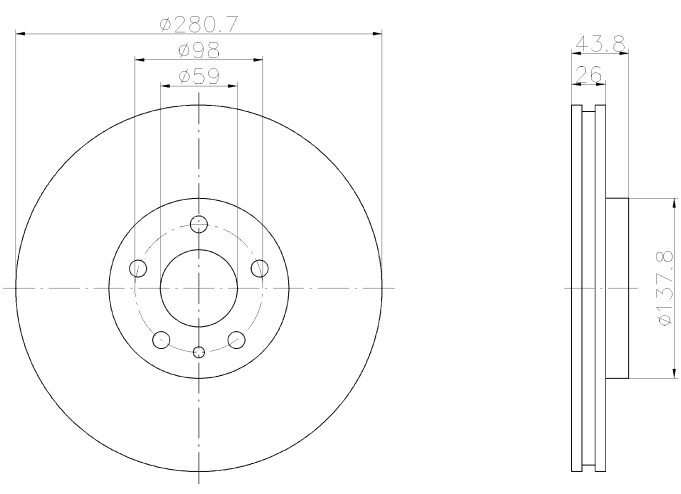

92261503

22 PRO

MAZDA

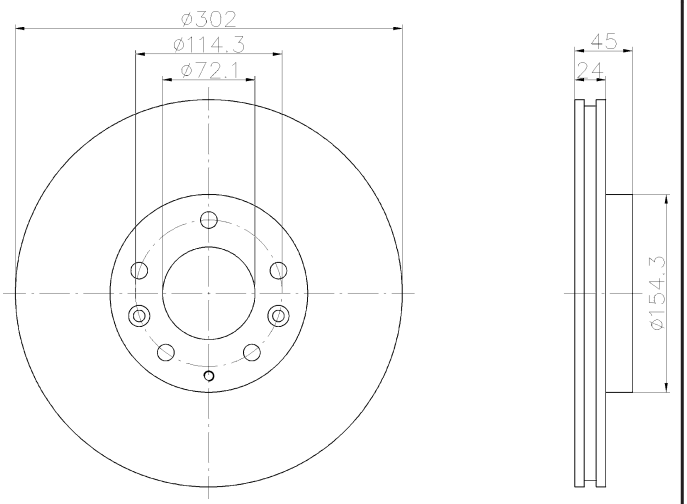

Illustrations

92261703

7.5 PRO

HONDA

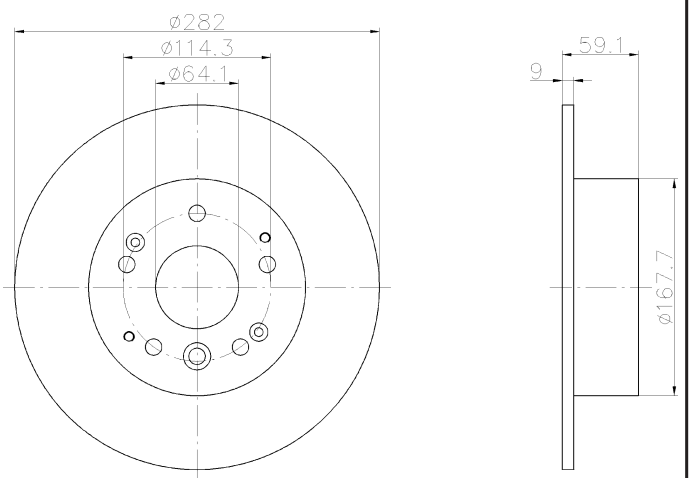

92262003

8.5 PRO

SUBARU

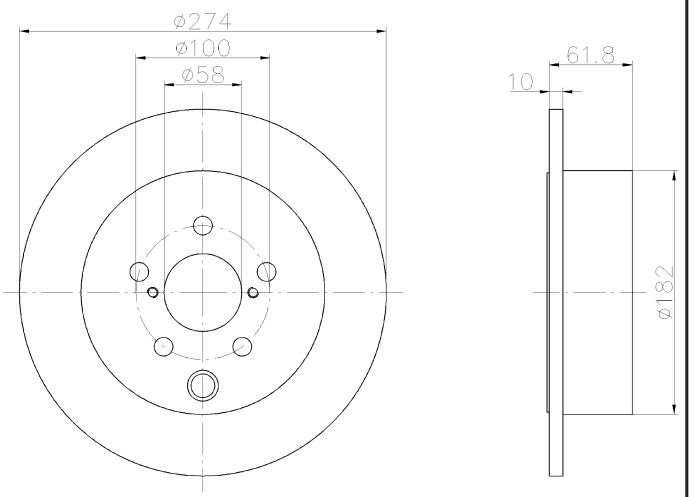

92262103

28 PRO

MERCEDES-BENZ

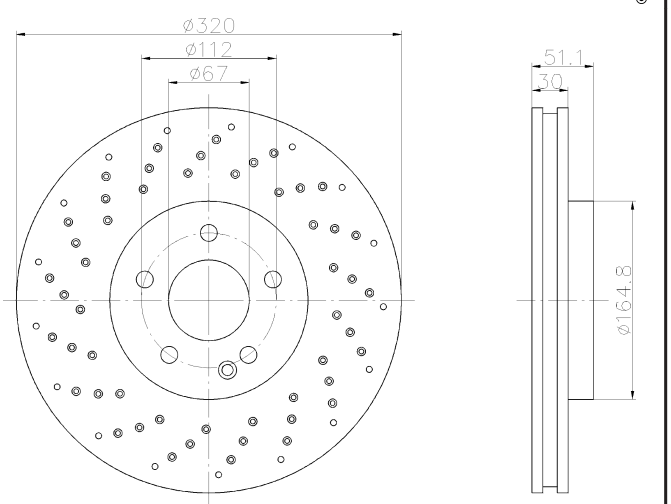

92262203

23 PRO

FORD, FORD AUSTRALIA

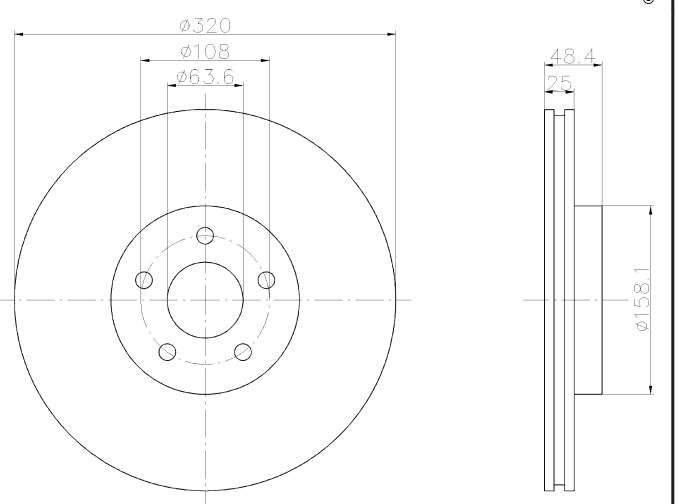

92263103

30 PRO

TOYOTA

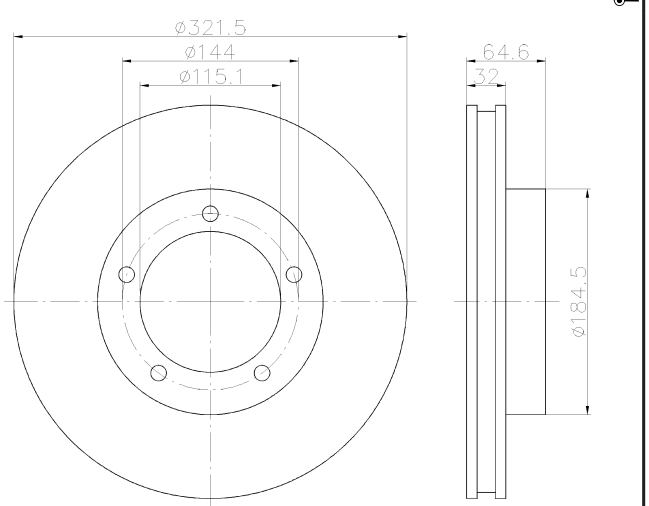

92264103

19 PRO

TATA (TELCO)

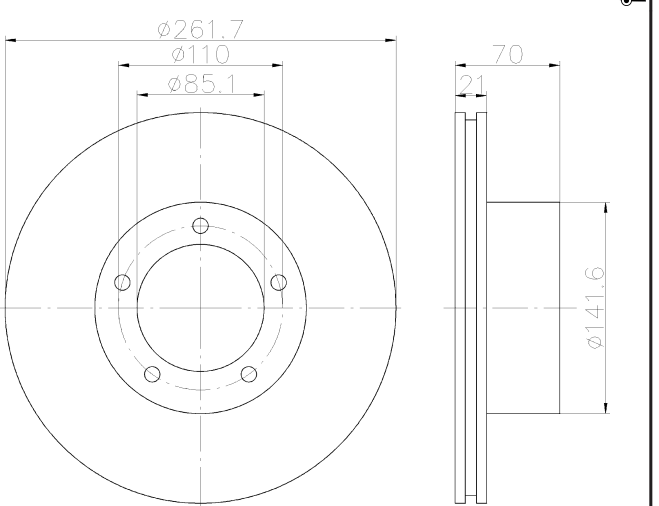

93019400

12.8

IVECO

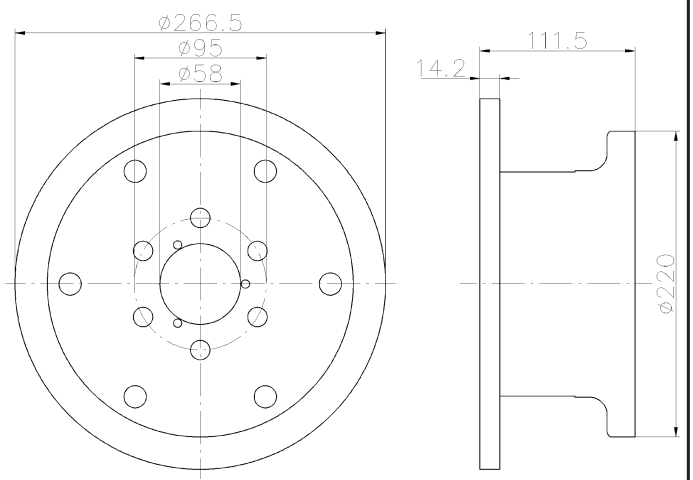

93042801

13

IVECO

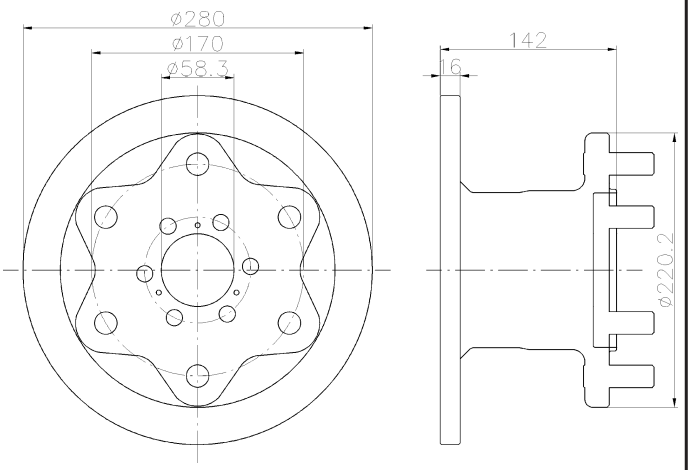

93084400

12.8

IVECO

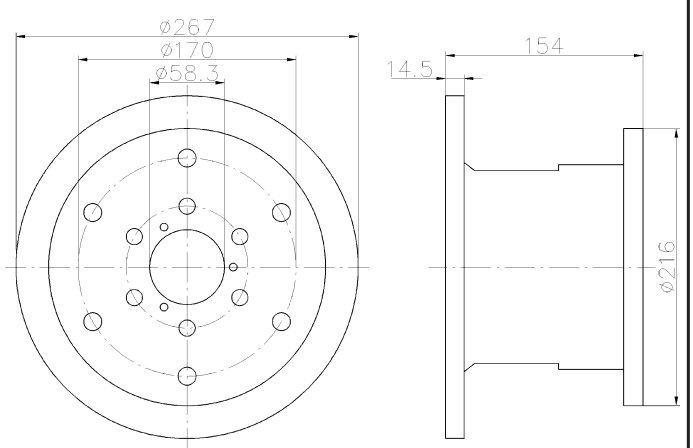

93084500

22

IVECO

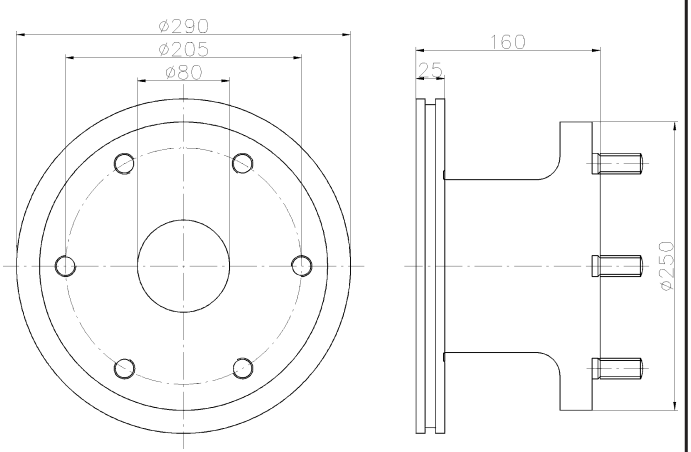

93085800

22

RENAULT TRUCKS

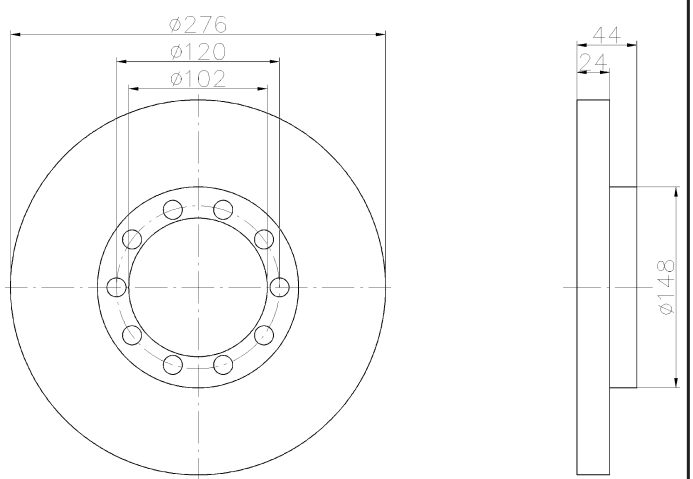

93087400

26

MERCEDES-BENZ

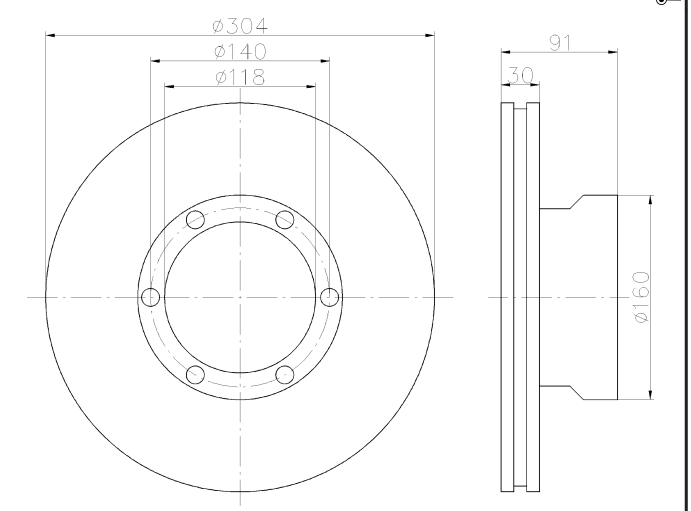

Illustrations

93087500

26

MERCEDES-BENZ

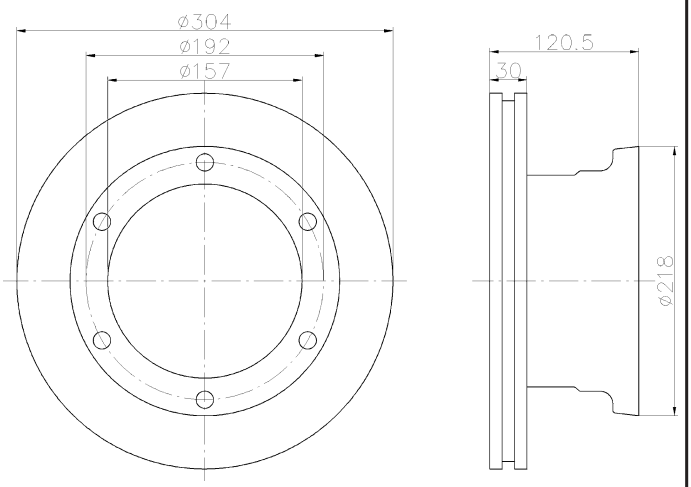

93087600

26

MERCEDES-BENZ

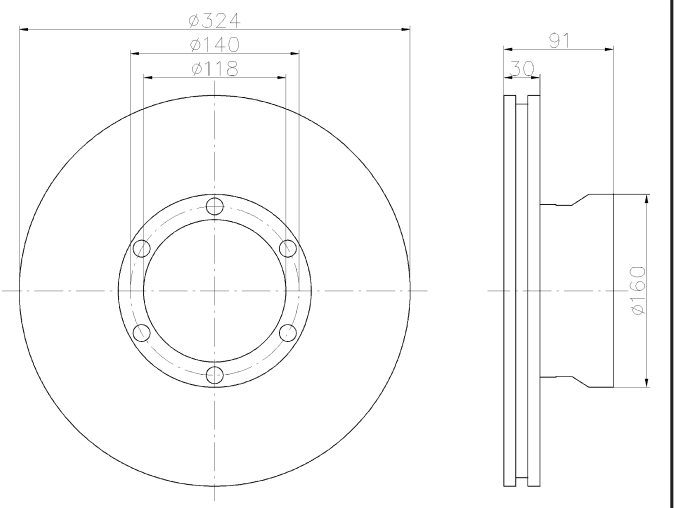

93087700

26

MERCEDES-BENZ

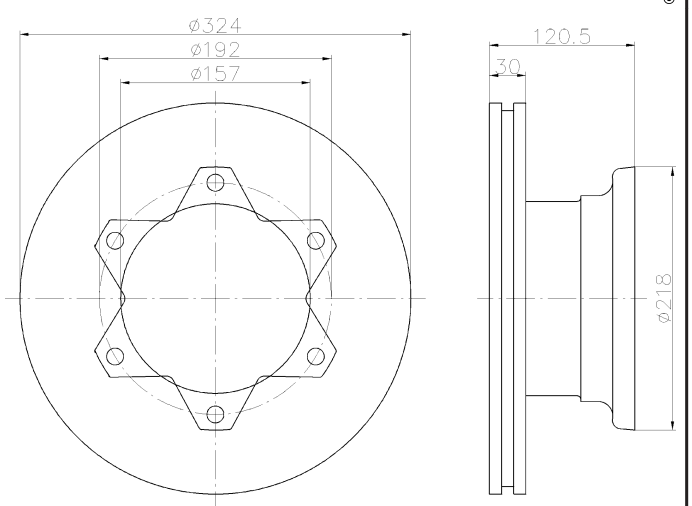

93089600

19

IVECO

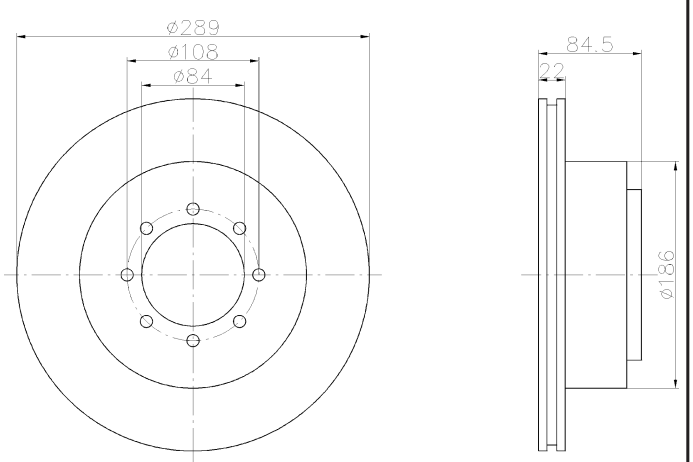

93095100

19

IVECO

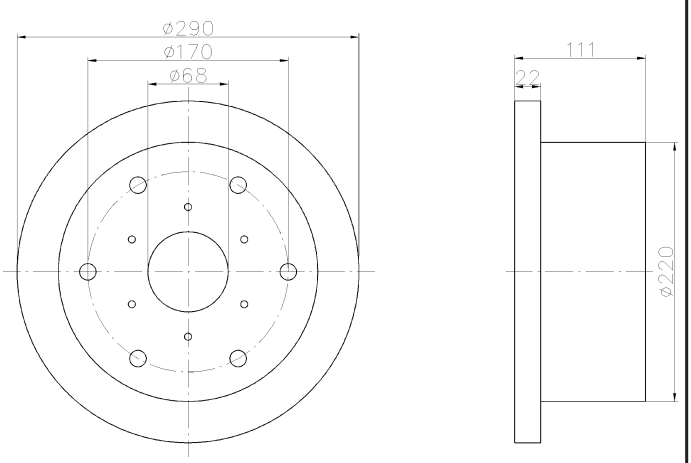

93104600

19

IVECO

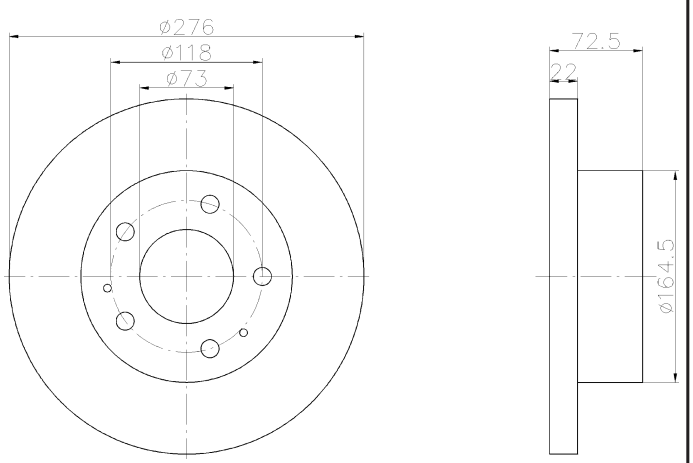

Illustrations

93104700

13

IVECO

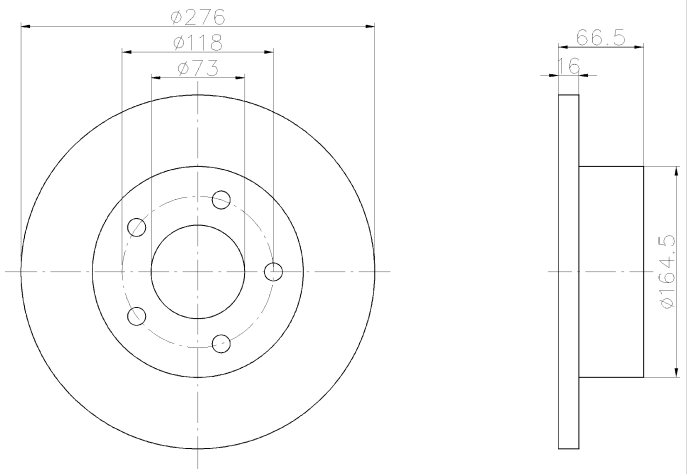

93104800

13

IVECO

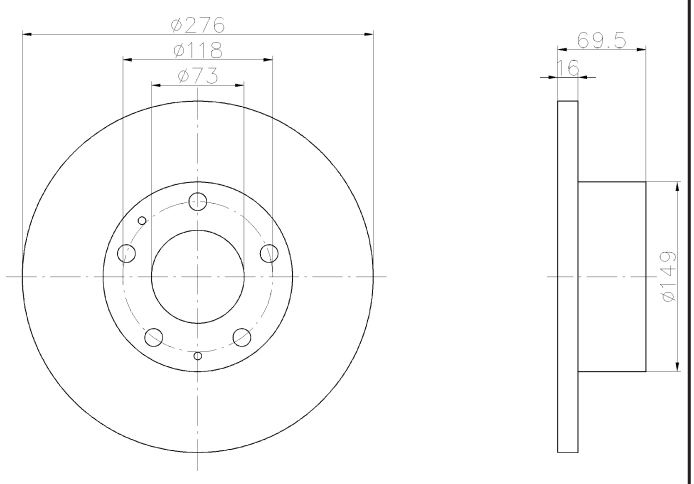

93117400

19

RENAULT TRUCKS

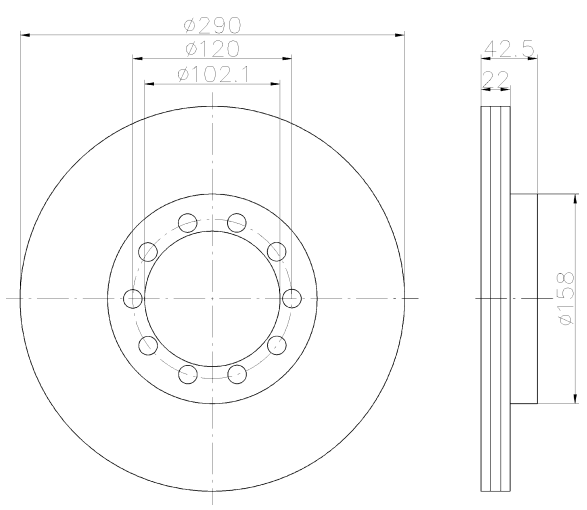

93117500

23

RENAULT TRUCKS

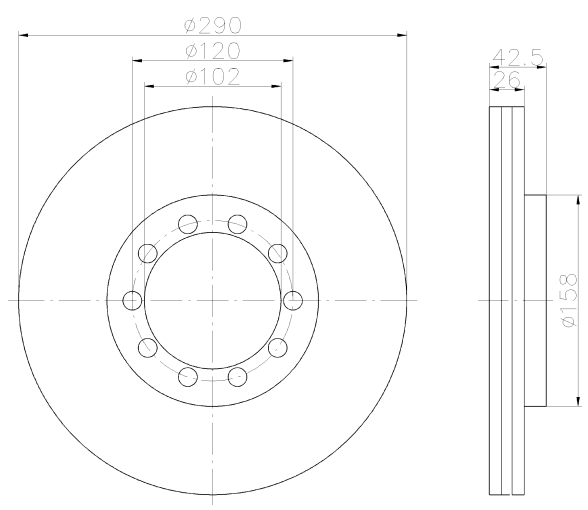

93117600

19

RENAULT TRUCKS

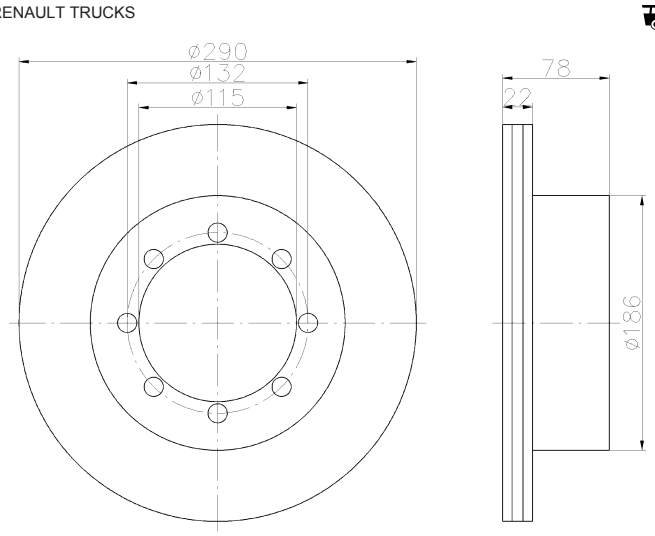

93123400

25

MERCEDES-BENZ, MERCEDES-BENZ (FJDA)

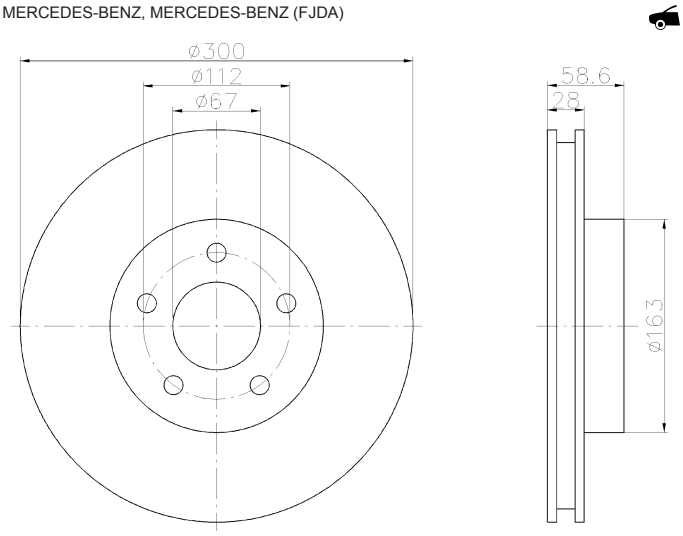

93123503

8 PRO

MERCEDES-BENZ, MERCEDES-BENZ (FJDA)

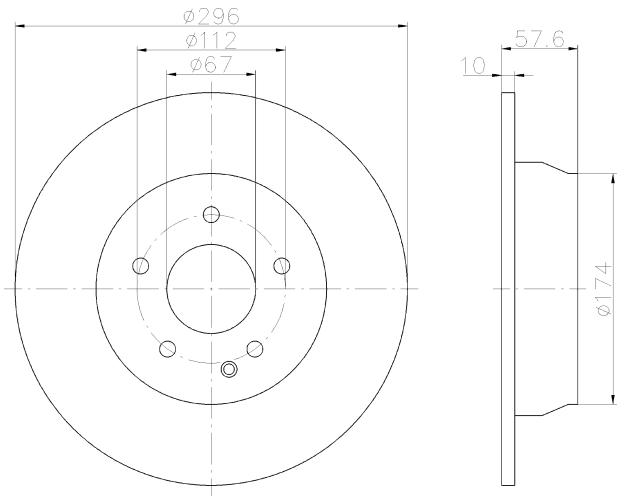

93127200

23

IVECO

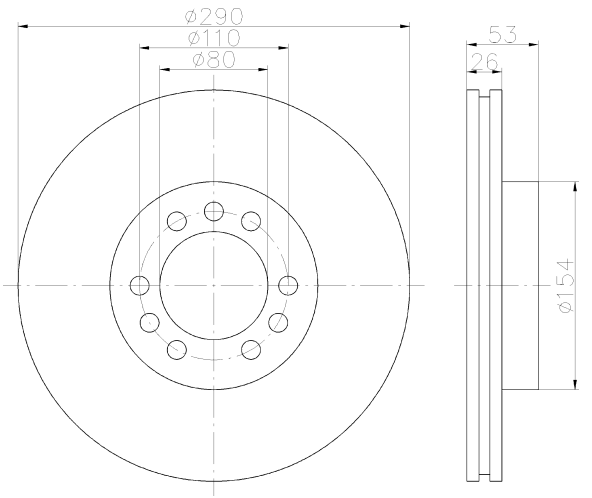

93127300

19

IVECO

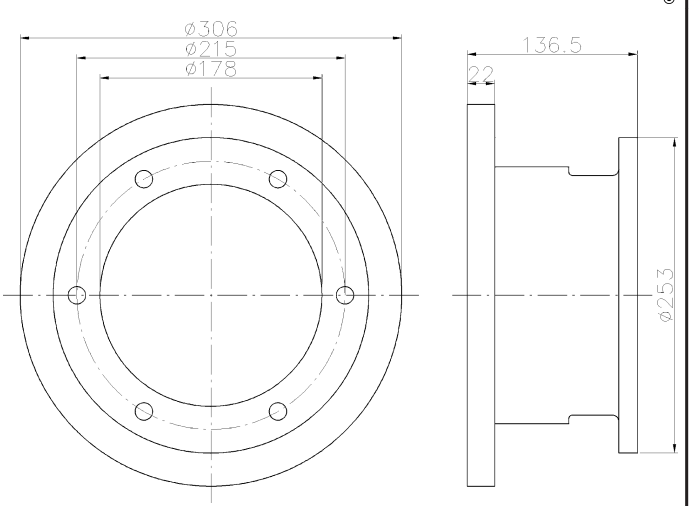

93127800

19

MERCEDES-BENZ

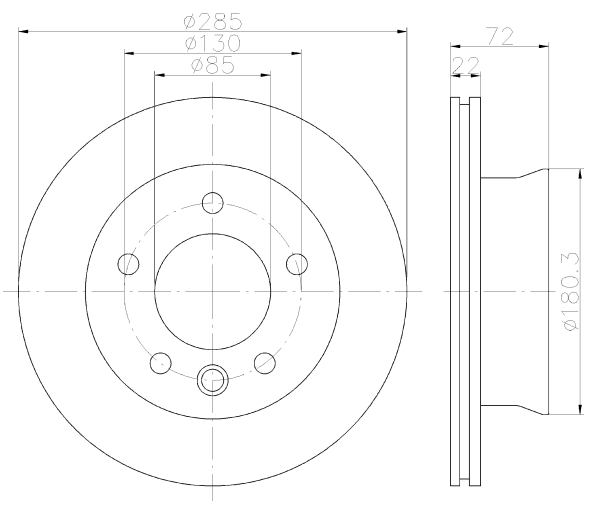

93143200

25

MERCEDES-BENZ, VOLKSWAGEN

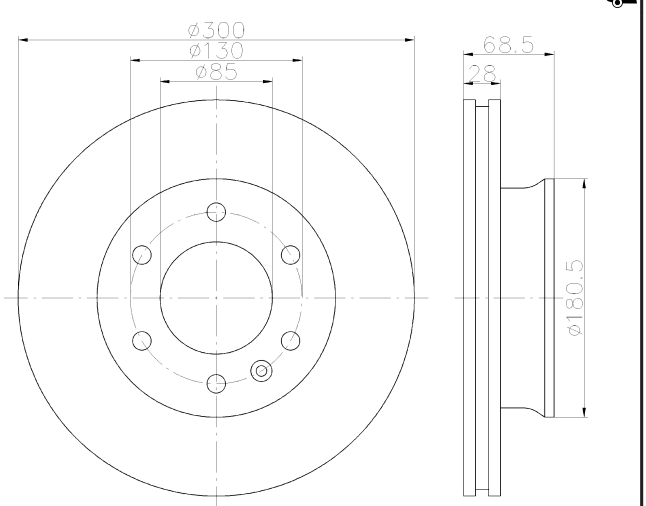

93143300

14

MERCEDES-BENZ, VOLKSWAGEN

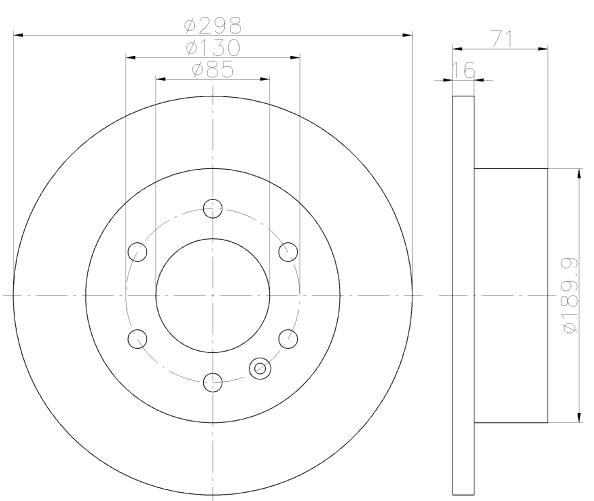

93143400

25

MERCEDES-BENZ, VOLKSWAGEN

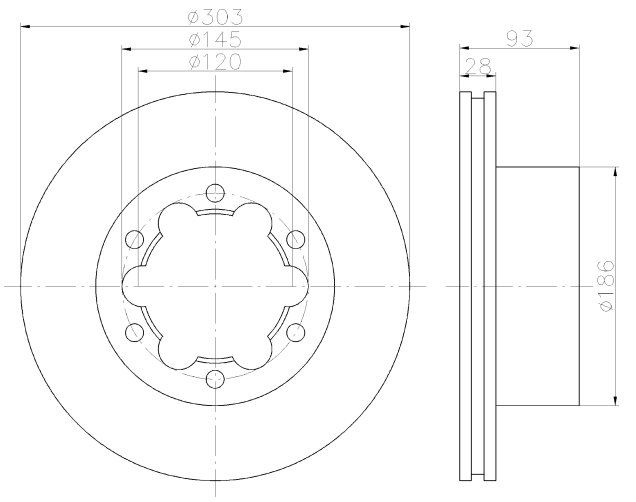

93175300

21

IVECO

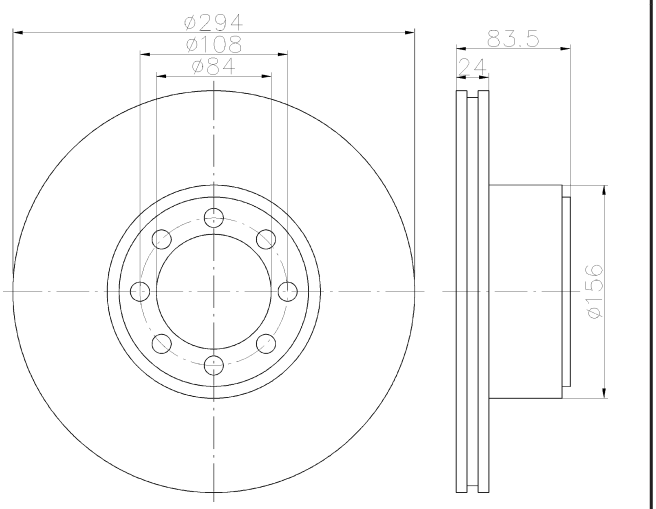

93175400

19

IVECO

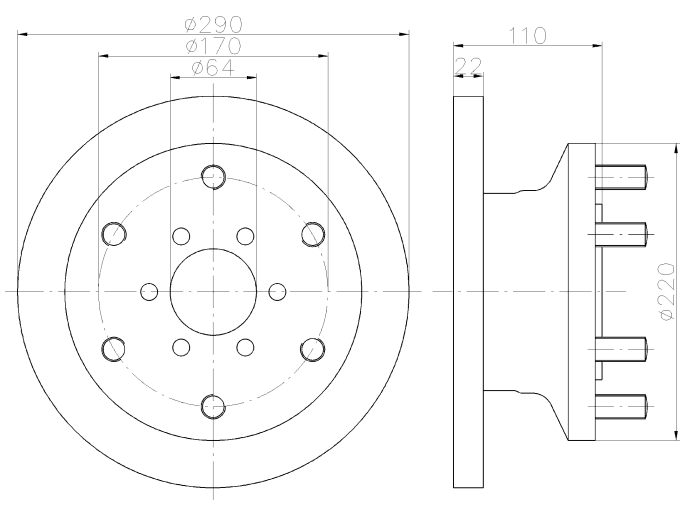

93177500

13

IVECO

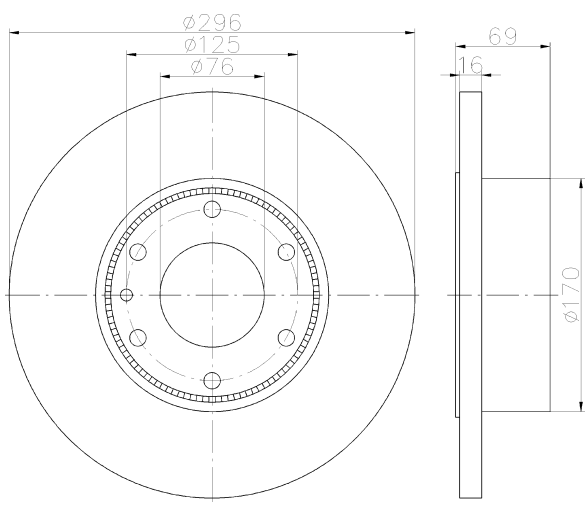

93177700

25

IVECO

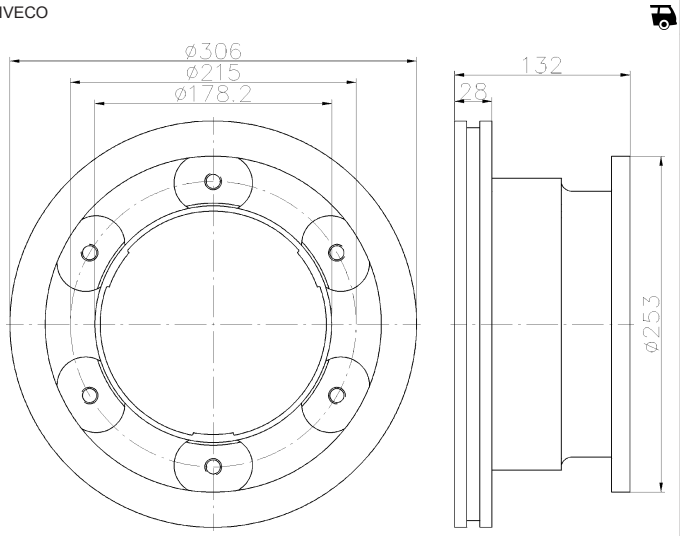

93177703

25 PRO

IVECO

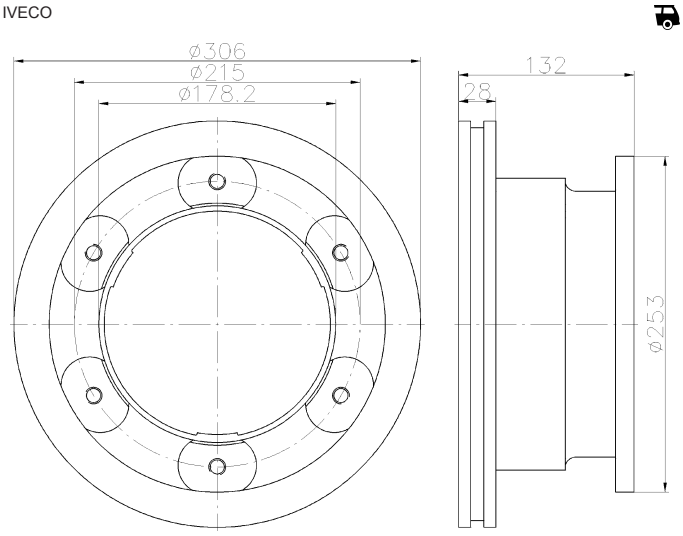

Illustrations

93185303

22 PRO

NISSAN

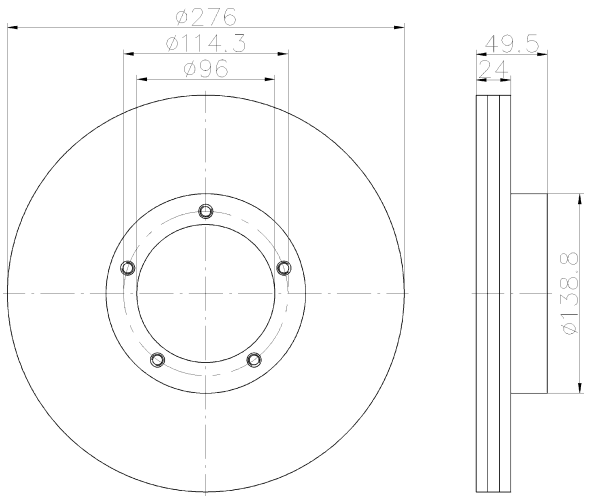

93191100

22

LDV, MAXUS (SAIC MOTOR)

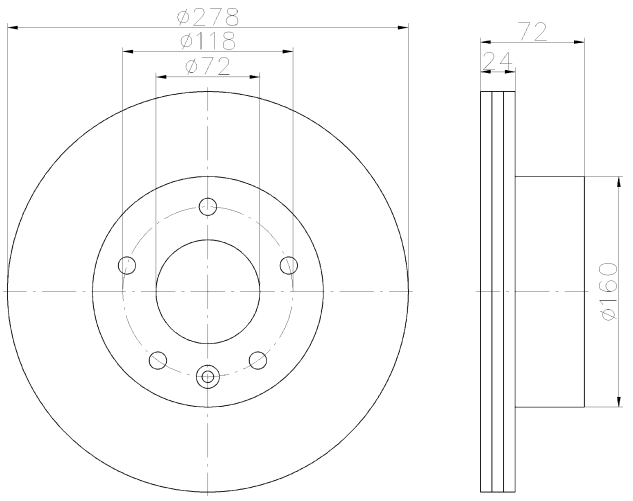

93191400

27

MERCEDES-BENZ

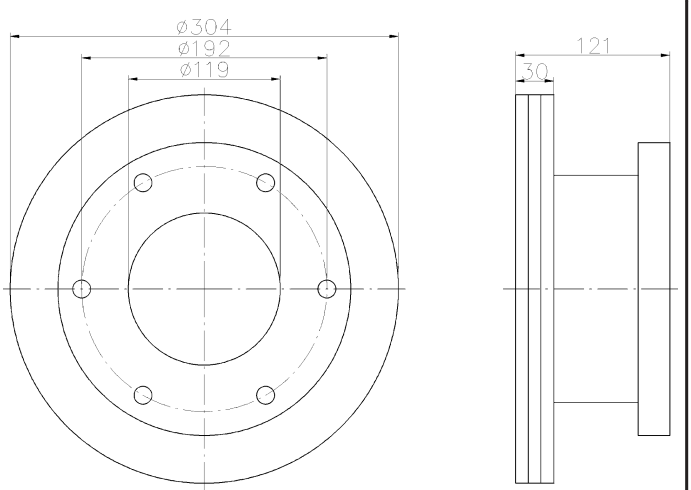

93191500

27

MERCEDES-BENZ

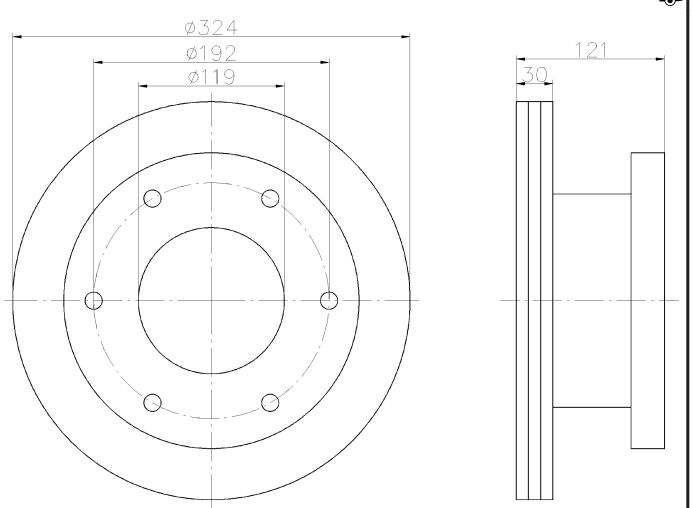

93191600

27

MERCEDES-BENZ

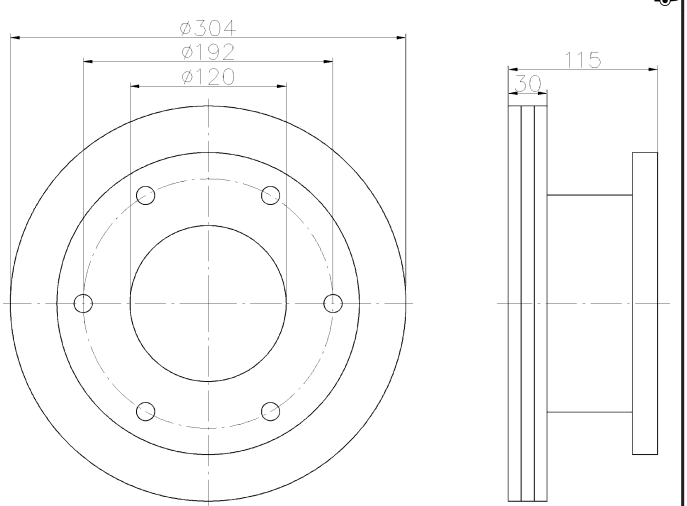

93191900

22

NISSAN

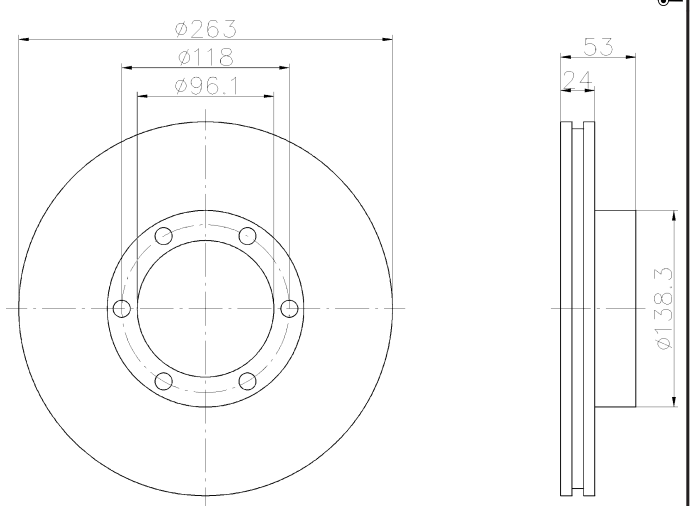

93229100

13

IVECO

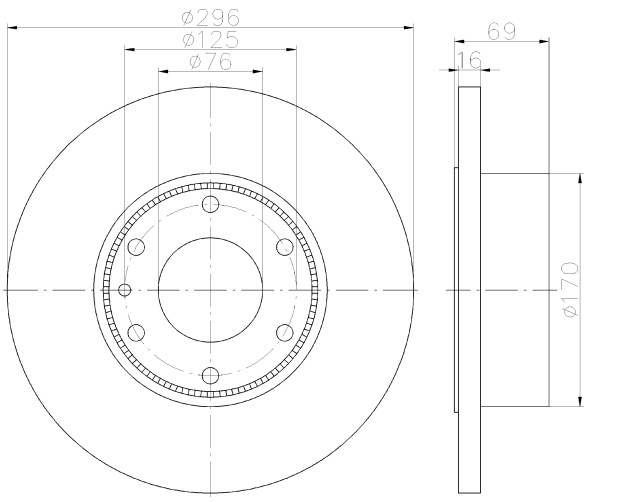

93240600

23

NISSAN

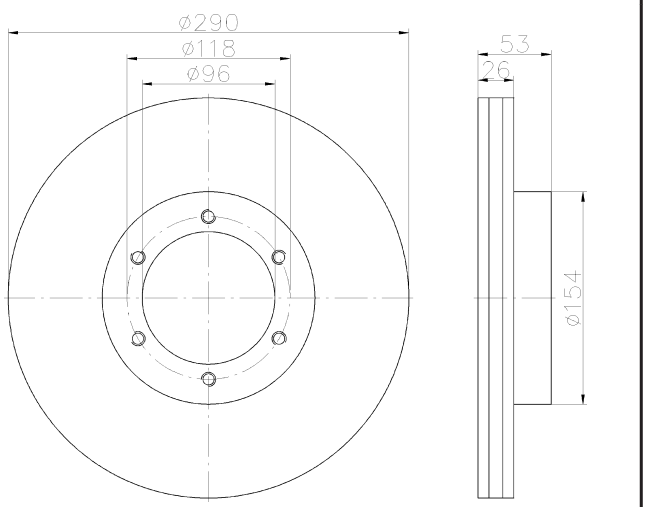

93242500

13

FORD

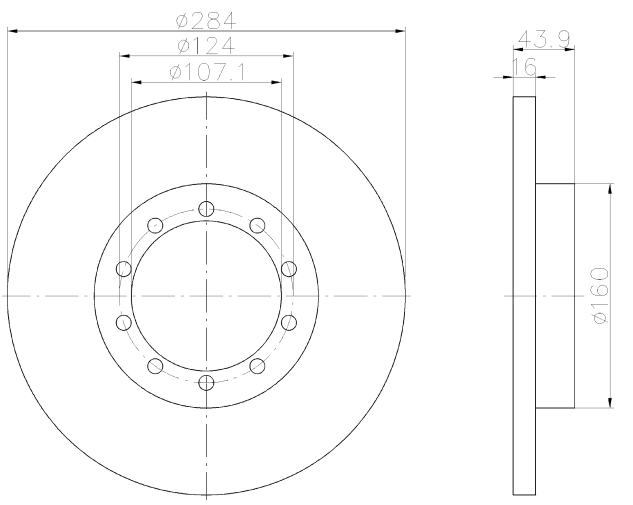

93260600

30

FORD

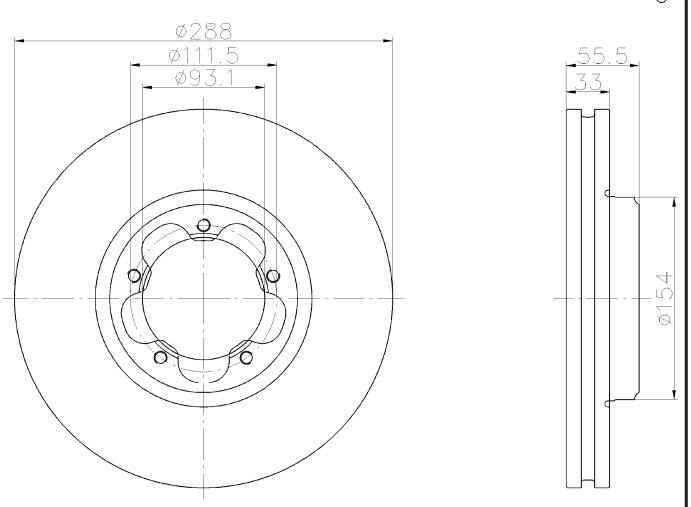

93260700

13 ABS

FORD

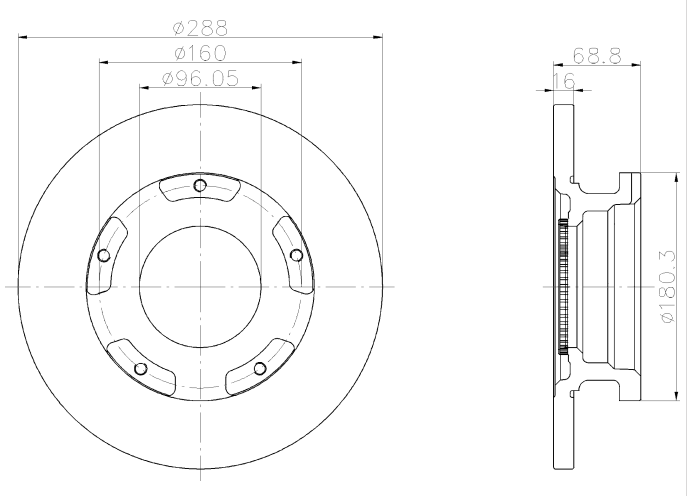

Illustrations

94002600

MERCEDES-BENZ, PUCH

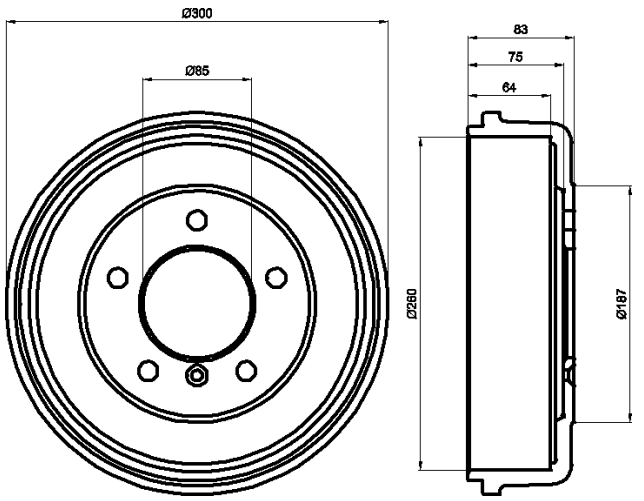

94003700

CHEVROLET, HOLDEN, OPEL, VAUXHALL

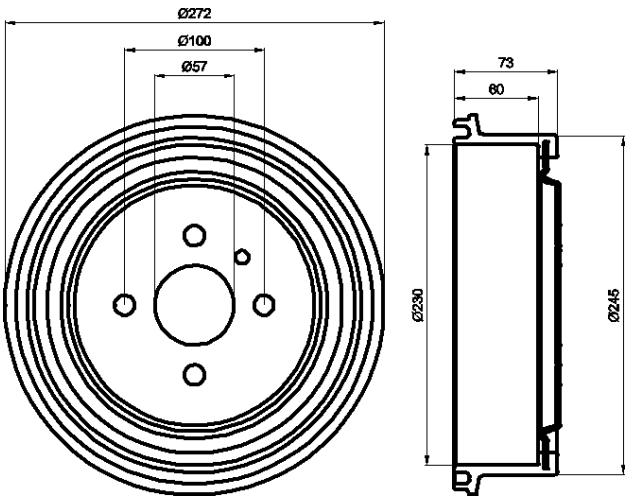

94004700

VOLKSWAGEN

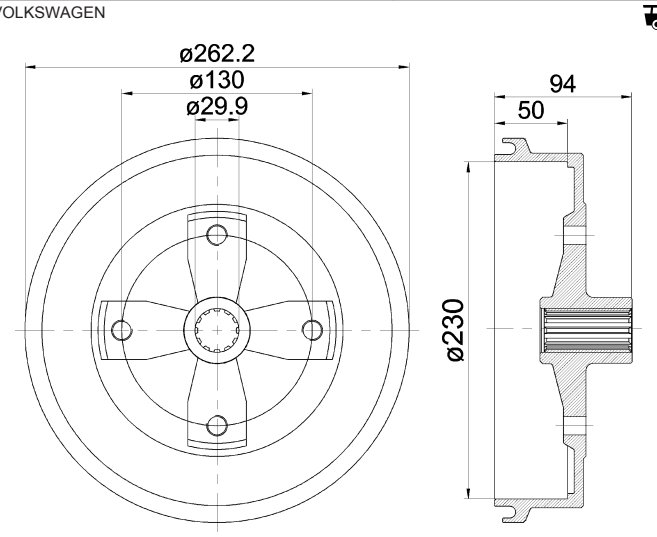

94006400

FIAT, FSO, ZASTAVA

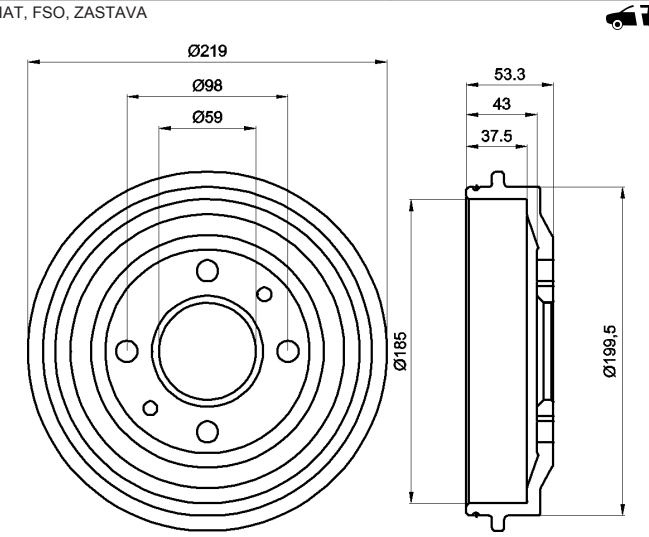

94006600

SEAT, VOLKSWAGEN

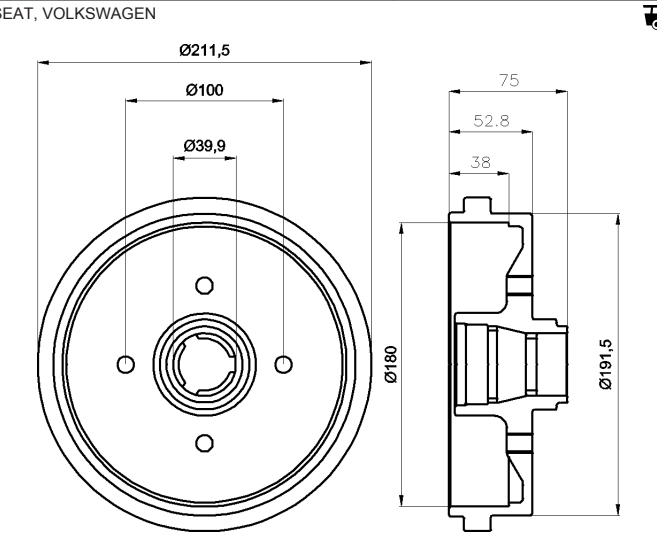

94006700

SEAT, SKODA, VOLKSWAGEN

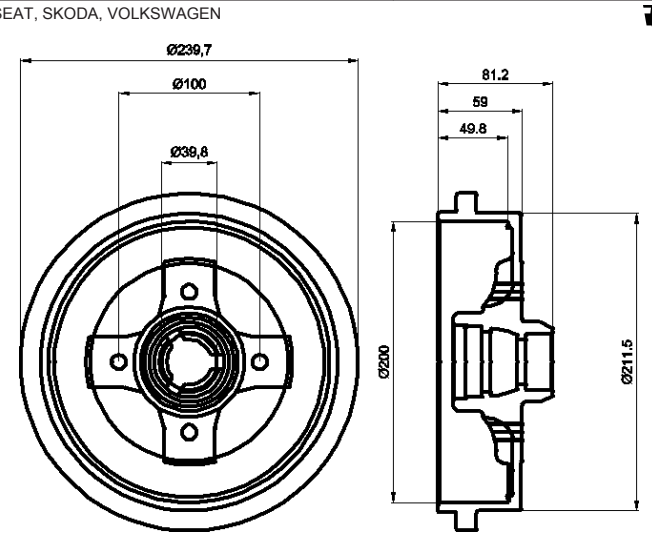

94007300

FORD

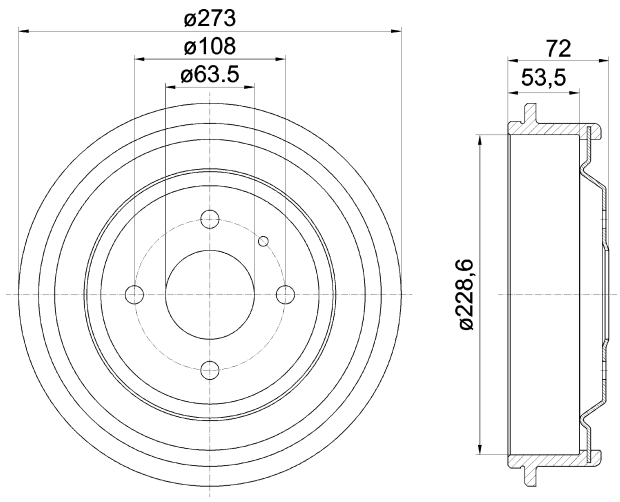

94008600

BUICK, CHEVROLET, DAEWOO, FSO, OPEL, VAUXHALL, ZAZ

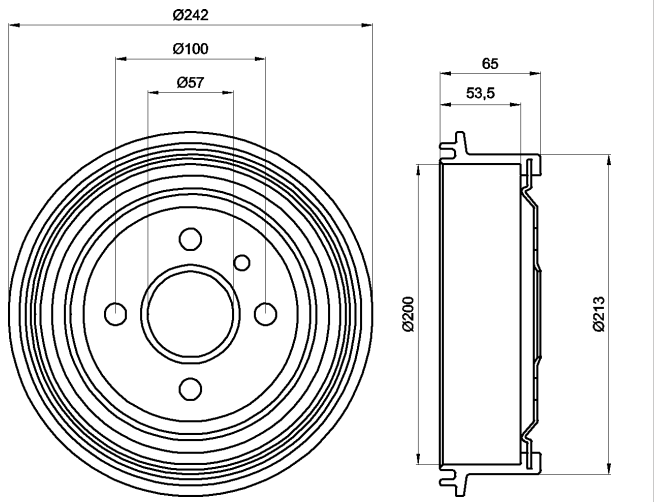

94009900

CHEVROLET, HOLDEN, OPEL, VAUXHALL

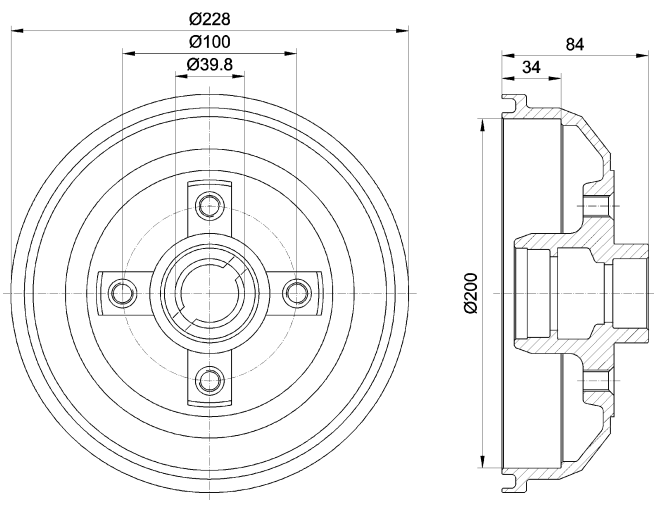

94010200

CITROËN, FIAT, PEUGEOT

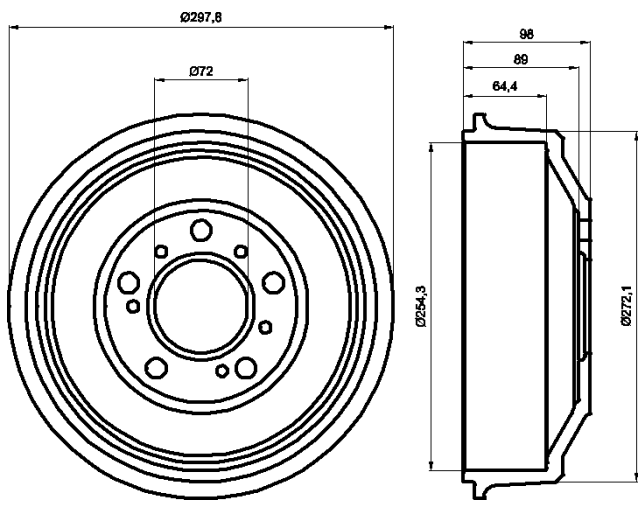

94010300

CITROËN, PEUGEOT

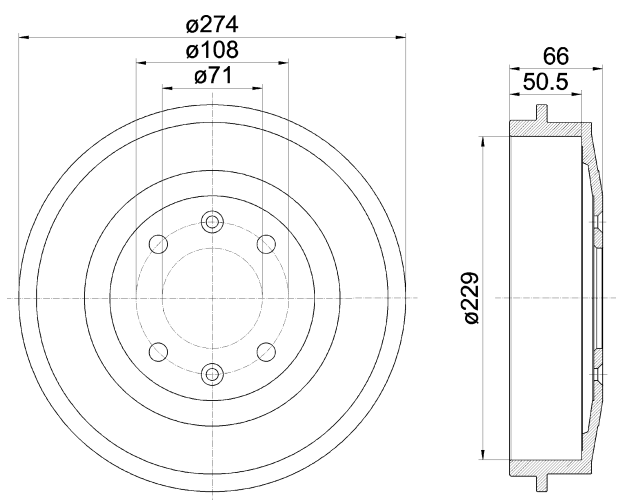

94011600

MERCEDES-BENZ, SSANGYONG

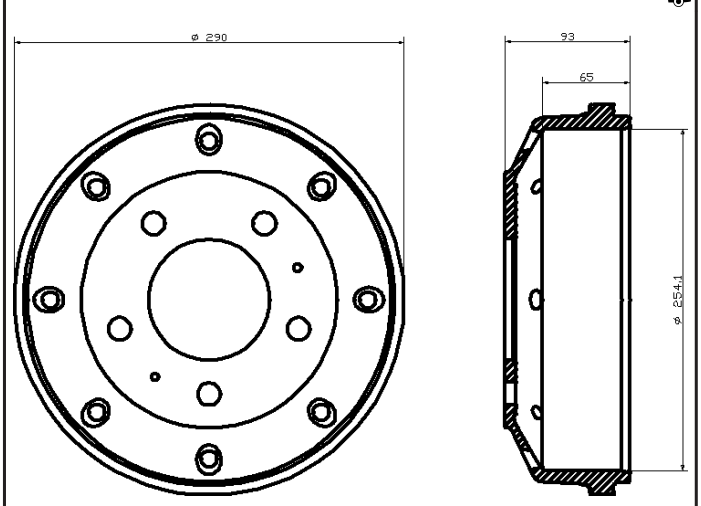

Illustrations

94011800

DALLAS, WULING

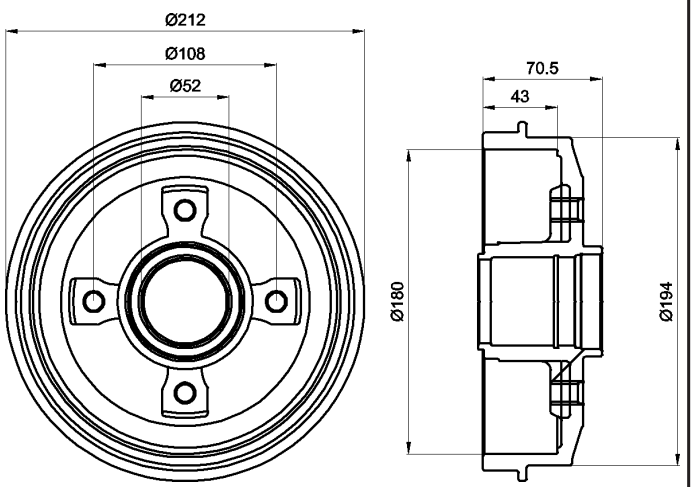

94011900

PEUGEOT

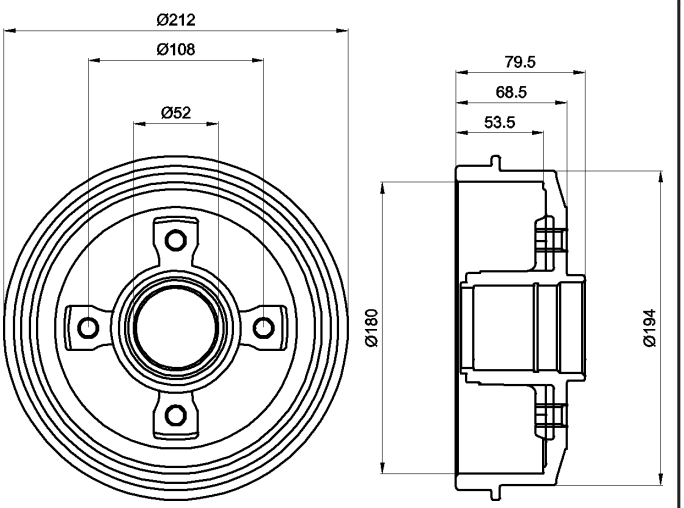

94012000

VOLKSWAGEN

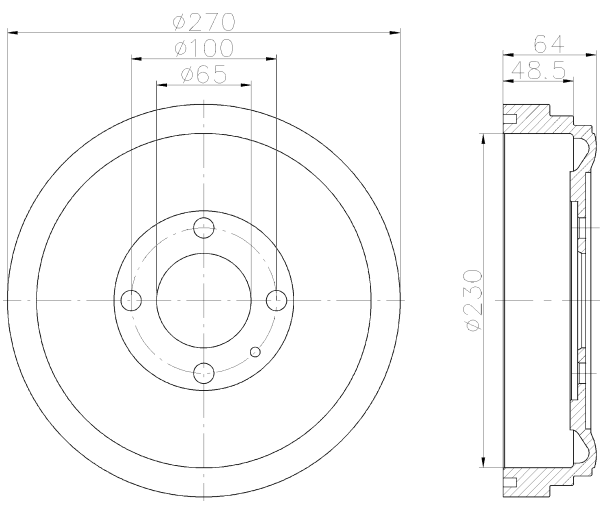

94012400

VOLKSWAGEN

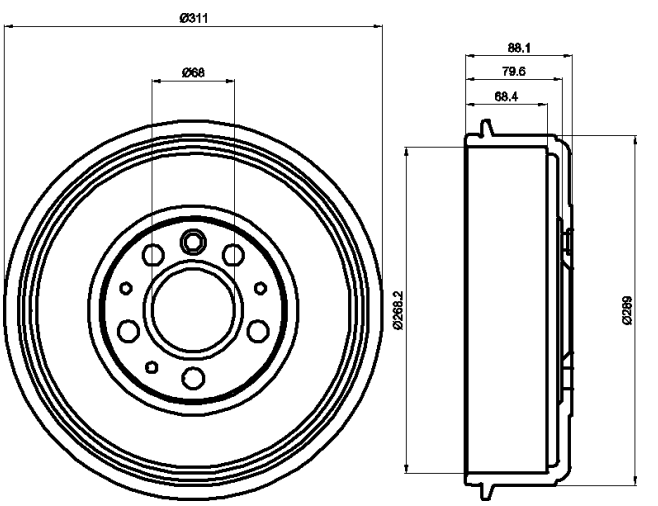

94012500

BMW

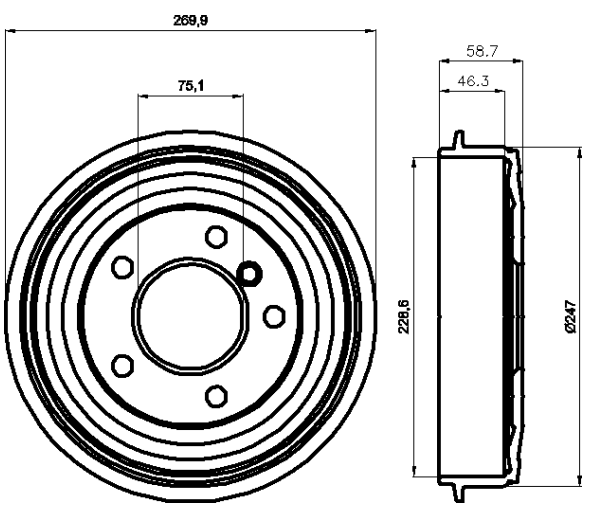

94012900

FORD, FORD ASIA / OZEANIA, FORD AUSTRALIA, MAZDA

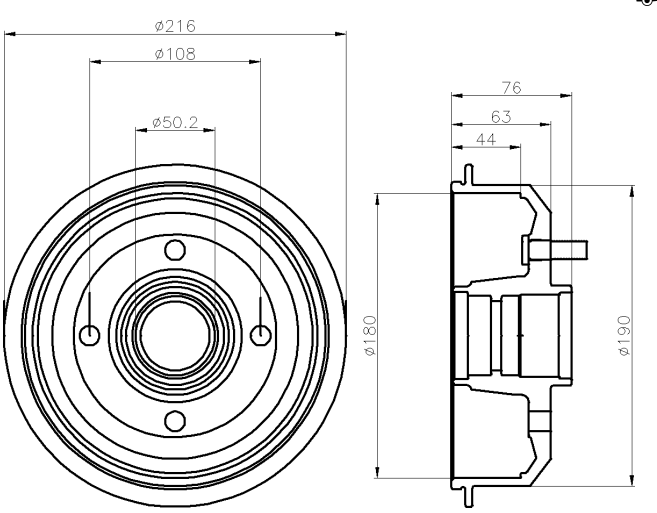

94013000

FORD

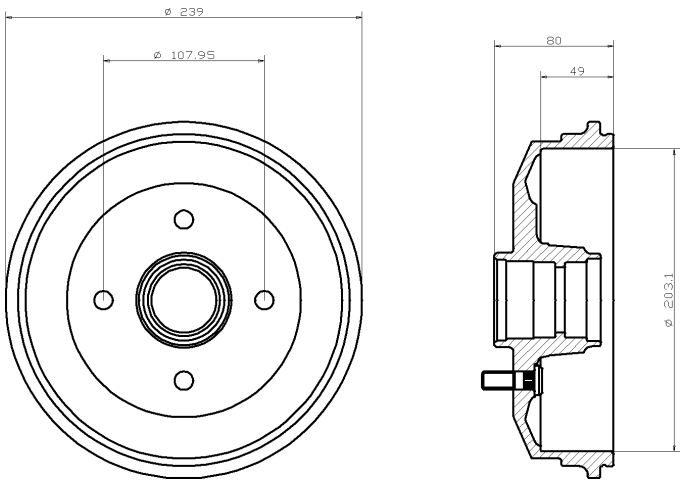

94013100

FORD, FORD AUSTRALIA

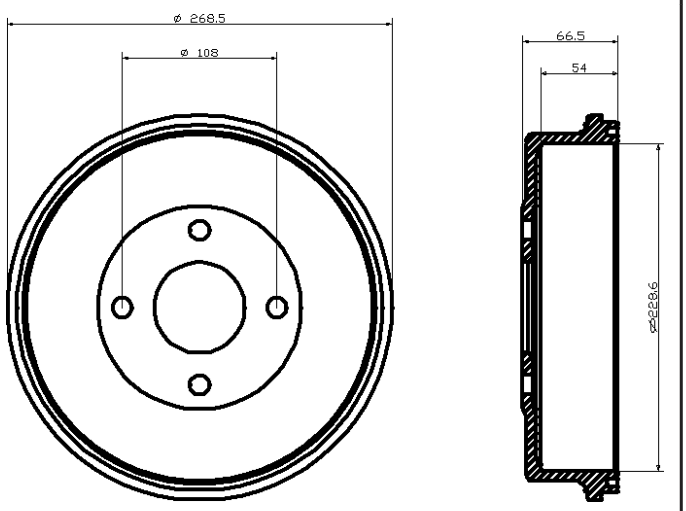

94013200

FORD, FORD AUSTRALIA

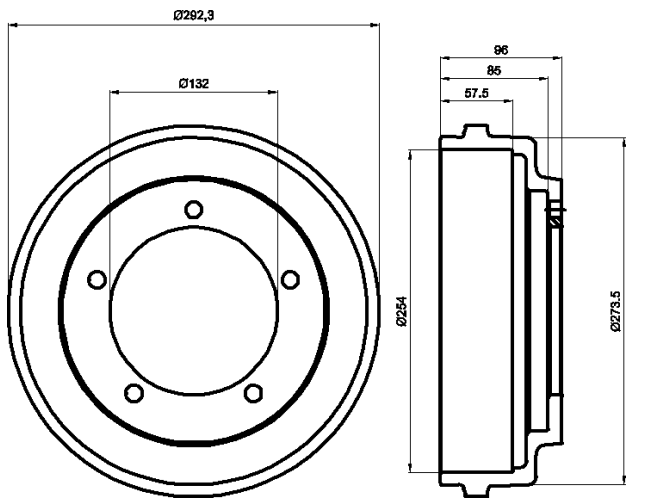

94013300

FORD, FORD AUSTRALIA

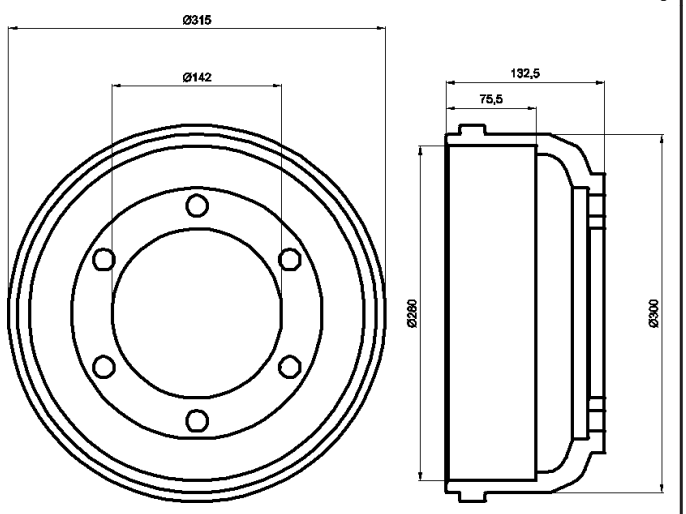

94013500

RENAULT

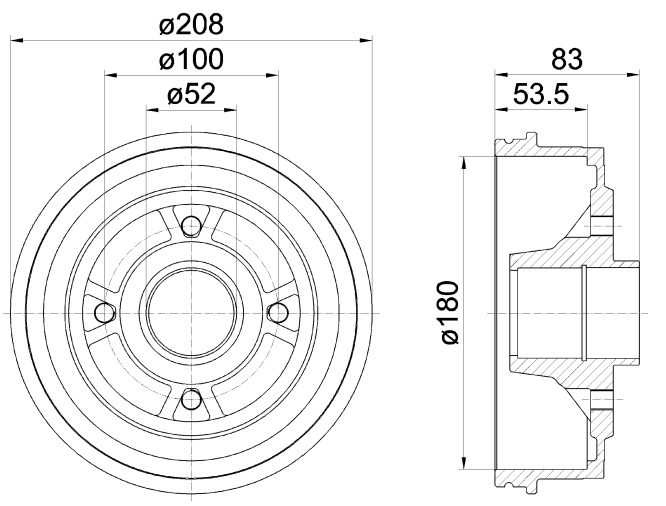

94013700

NISSAN, RENAULT

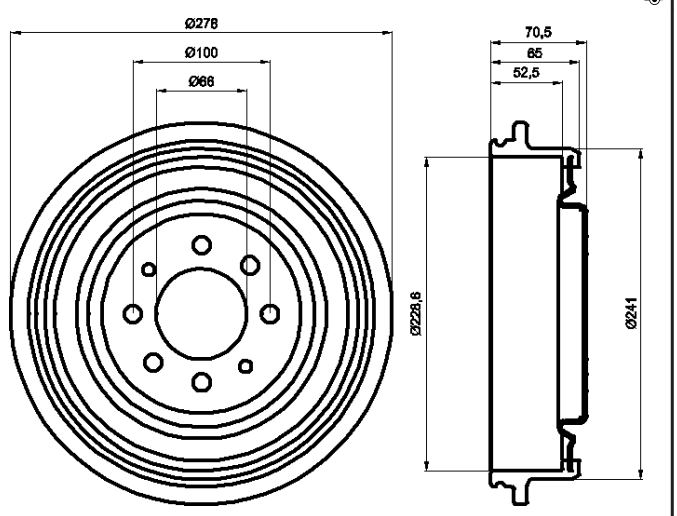

94014000

ALFA ROMEO, FIAT, LANCIA, PEUGEOT

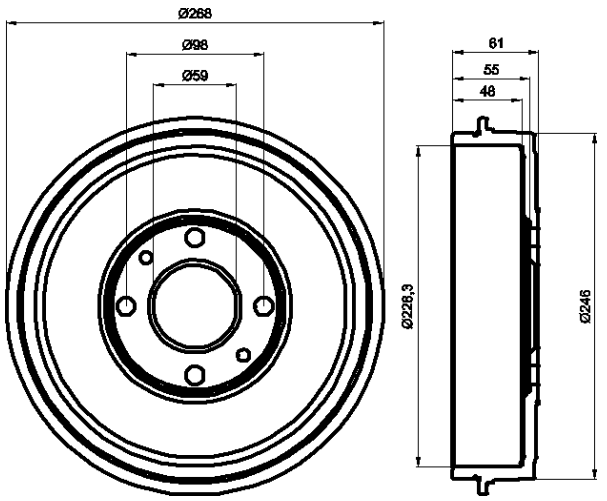

94014100

CITROËN, MEGA, PEUGEOT

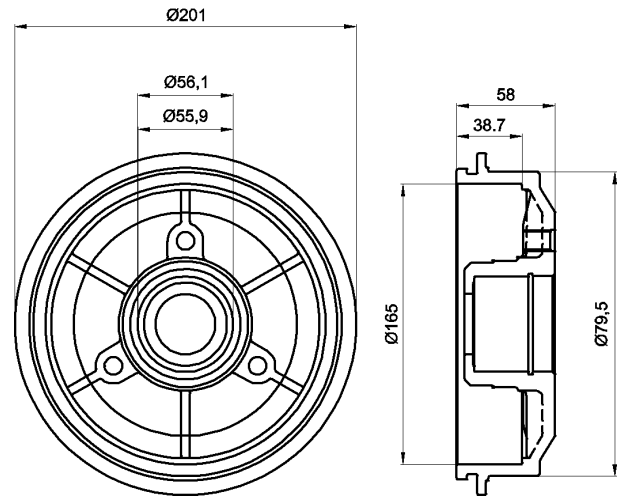

94014200

CITROËN, PEUGEOT

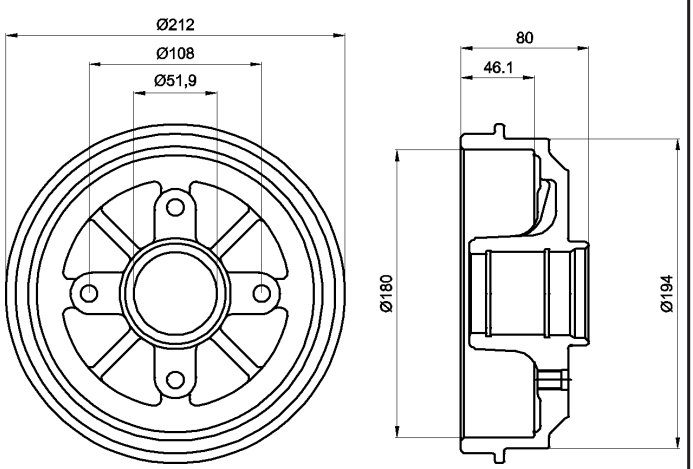

94014300

CITROËN, PEUGEOT

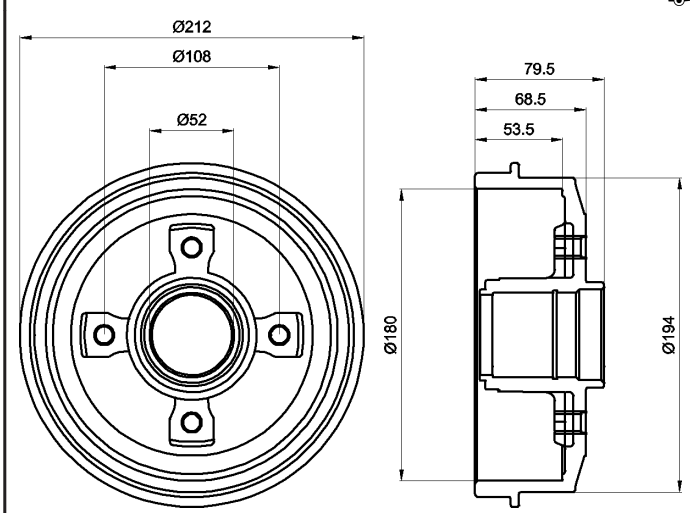

94014600

CITROËN, FIAT, PEUGEOT

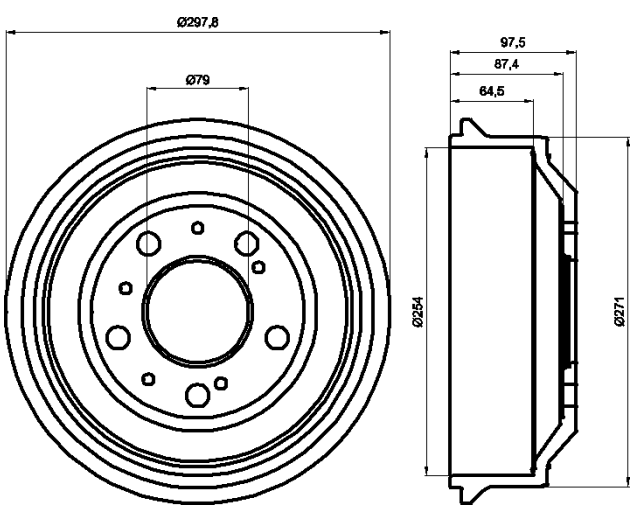

94014800

FIAT, FORD, LANCIA, ZASTAVA

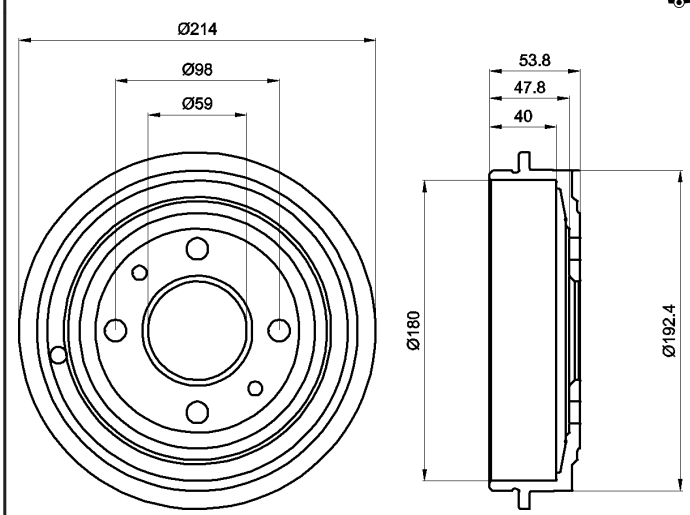

94015000

CITROËN, FIAT, LANCIA, PEUGEOT

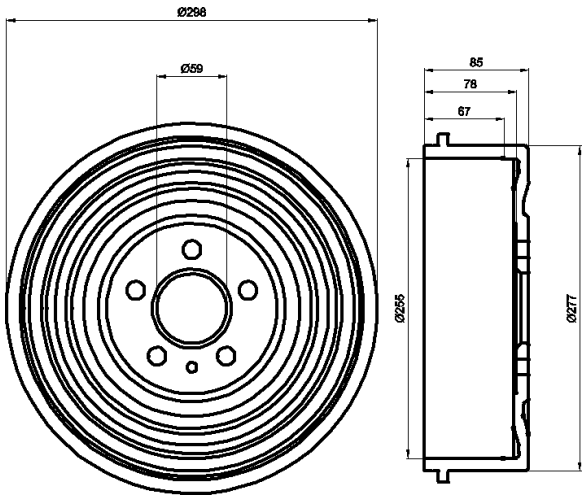

94015100

FORD

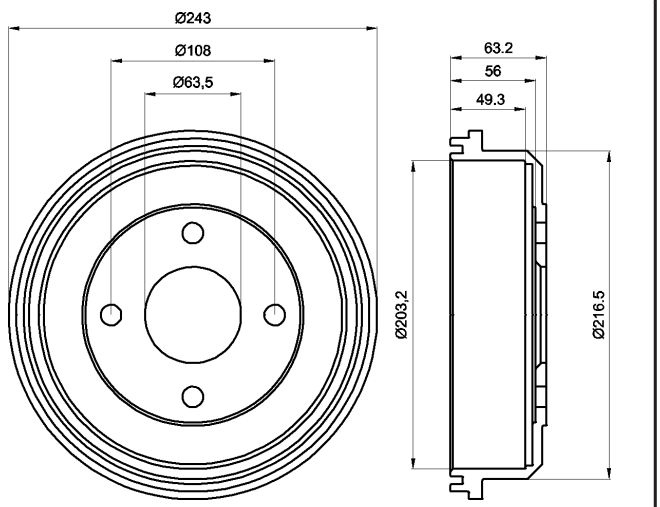

94015300

HONDA

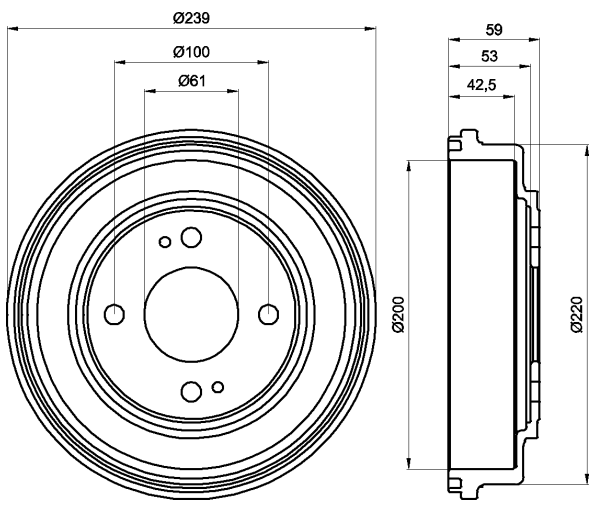

94015500

ISUZU, OPEL, VAUXHALL

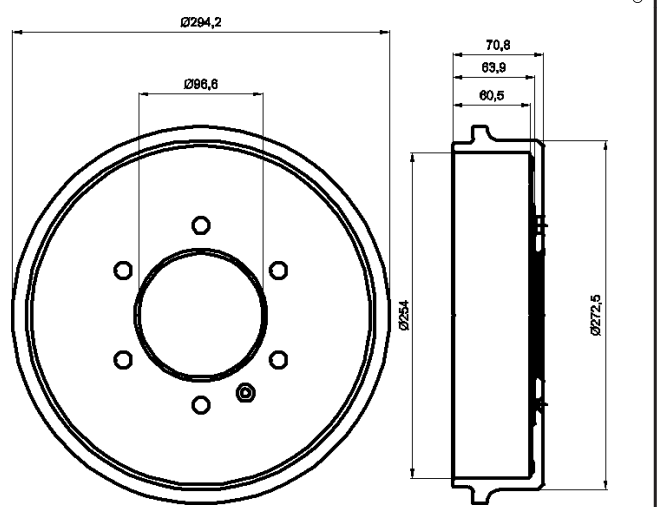

94015700

CHEVROLET, LADA

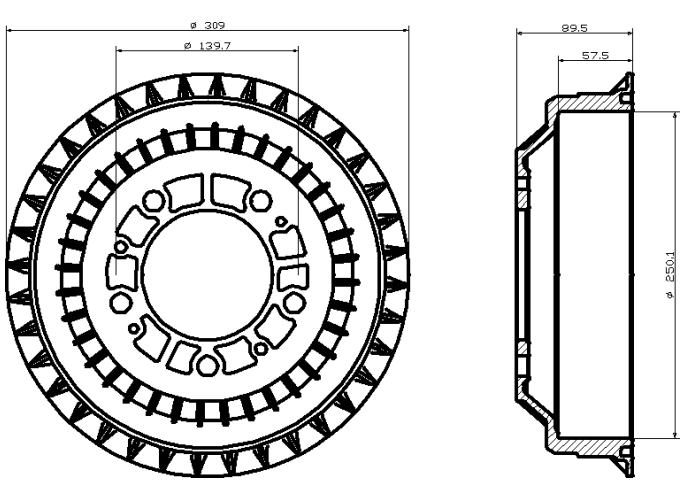

94015800

FORD ASIA / OZEANIA, KIA

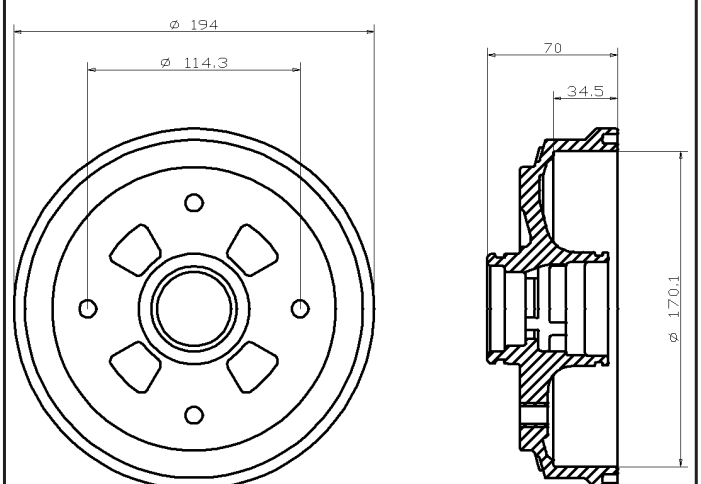

94016300

MITSUBISHI

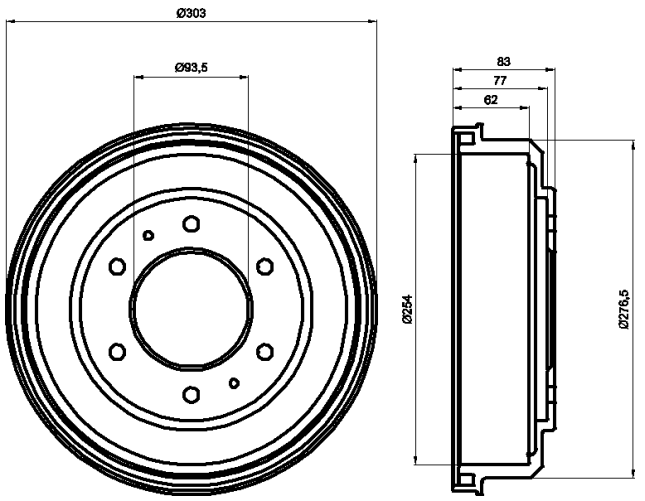

94016800

ISUZU

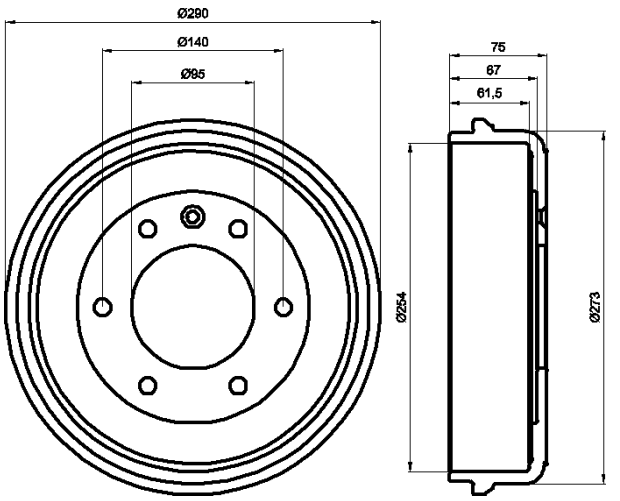

94016900

CITROËN, PEUGEOT

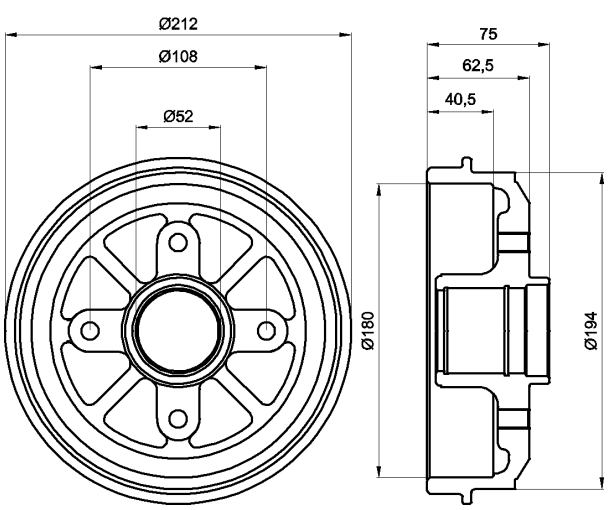

94017100

ROVER

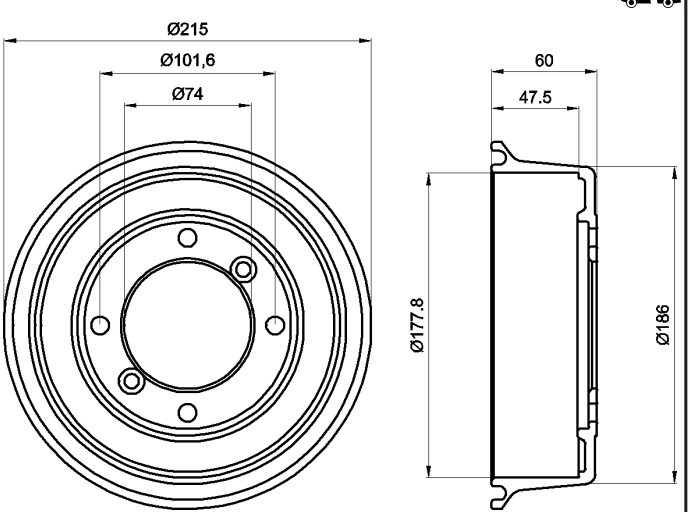

94017200

ROVER

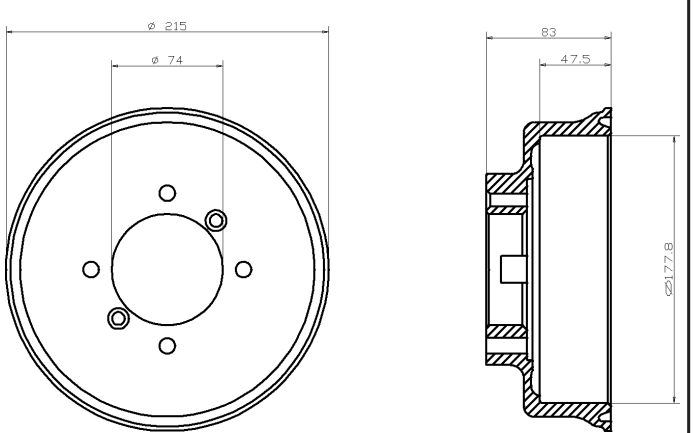

94017600

HONDA, MG, ROVER

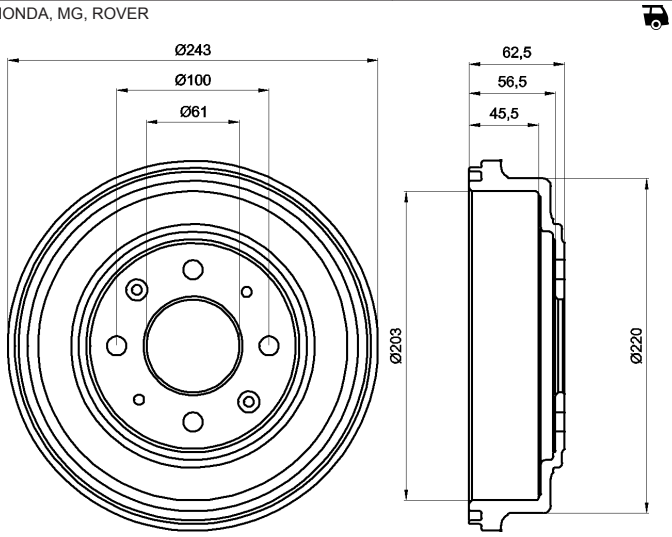

94017800

TOYOTA

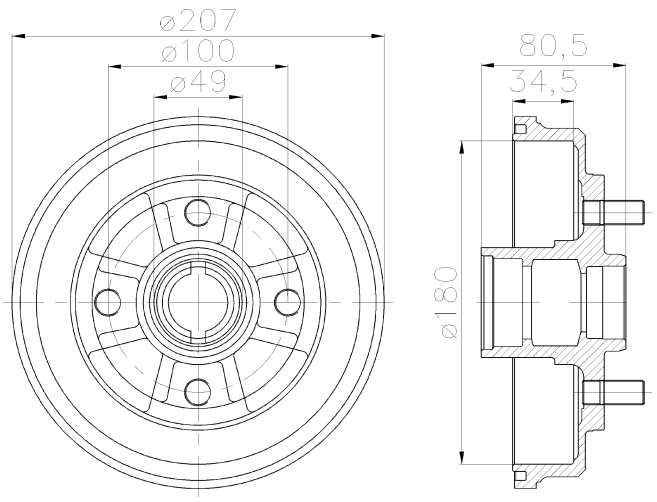

94017900

RENAULT

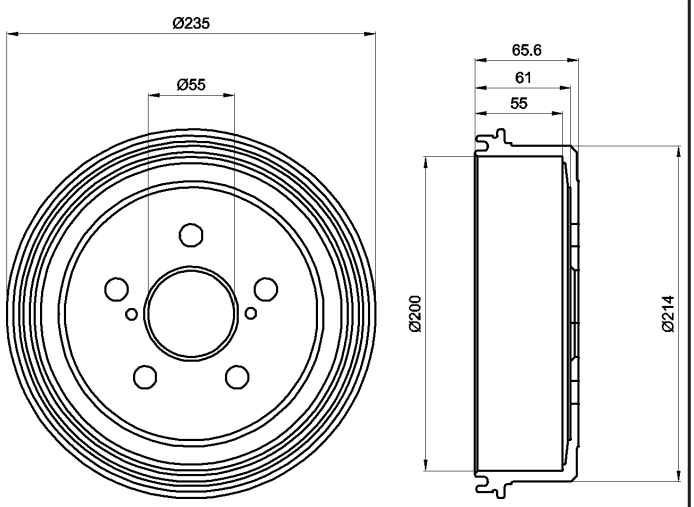

94018300

TOYOTA

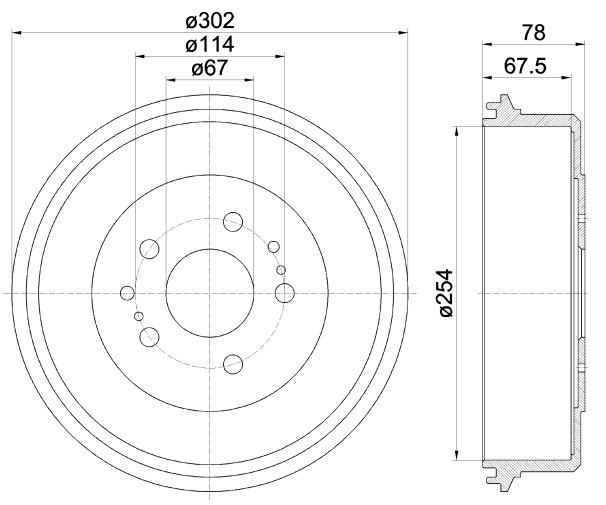

94018500

FORD, FORD AUSTRALIA, MAZDA

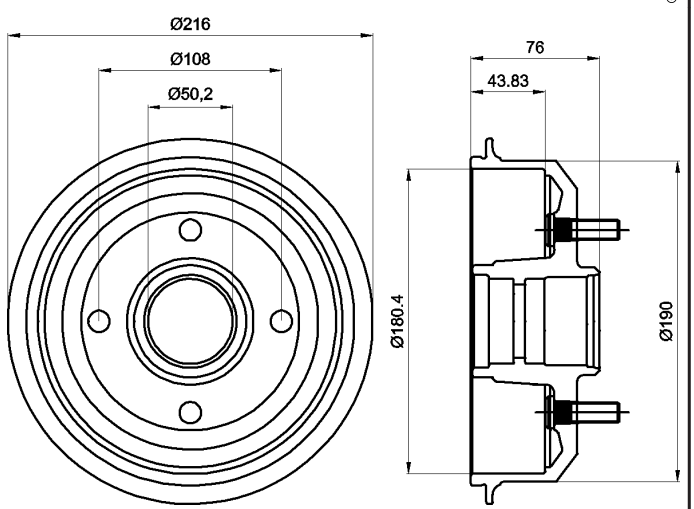

94018900

SEAT, VOLKSWAGEN

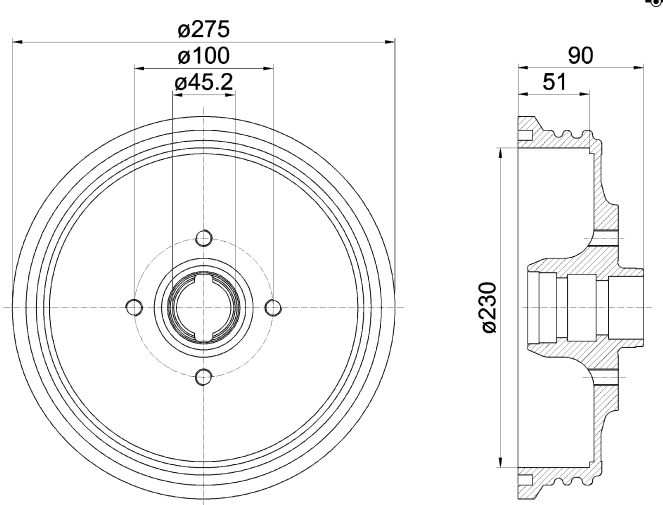

94019000

FORD

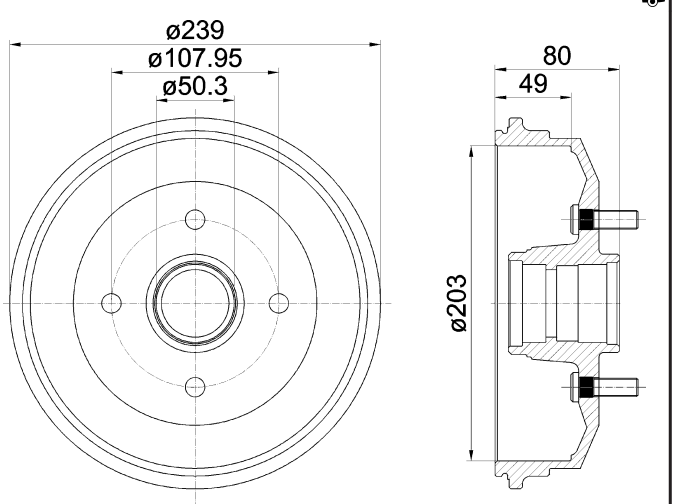

94019100

FORD

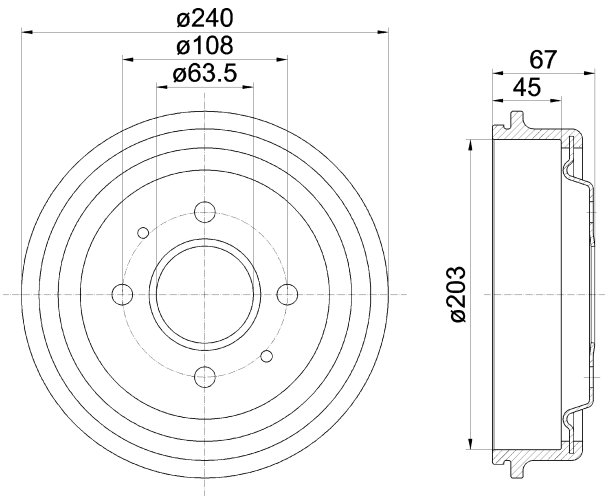

94019300

SUZUKI

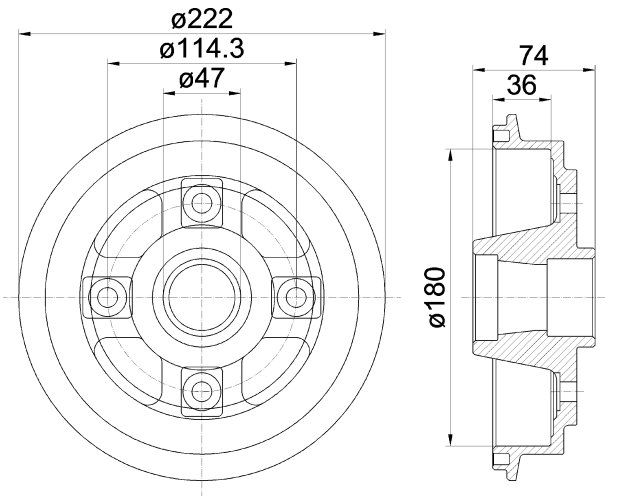

94019500

RENAULT

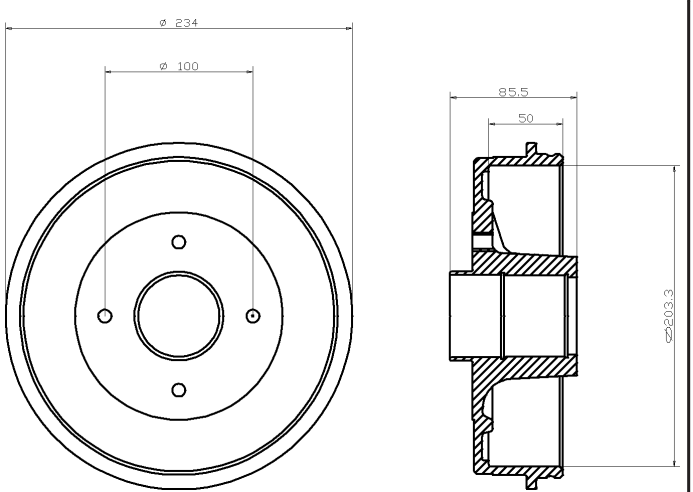

94019600

RENAULT

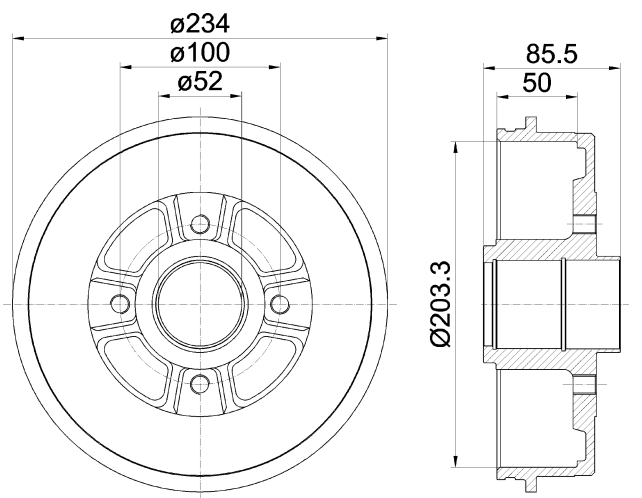

94019700

DACIA, NISSAN, RENAULT

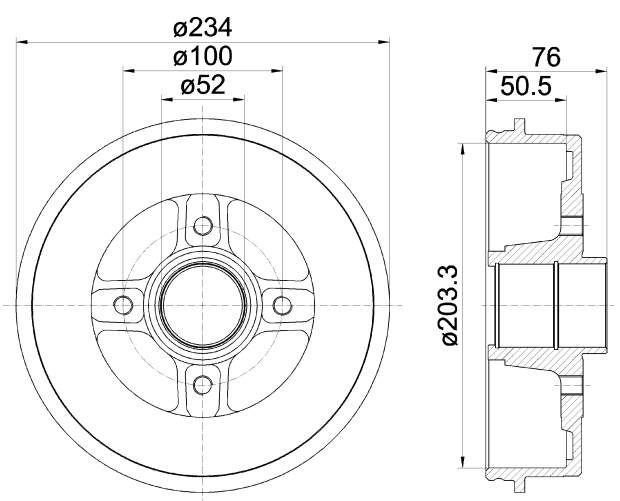

94019900

ALFA ROMEO, FIAT, LANCIA

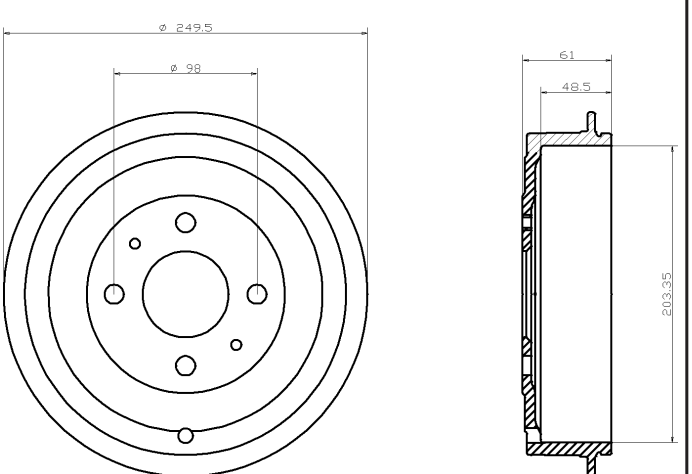

94020000

FIAT

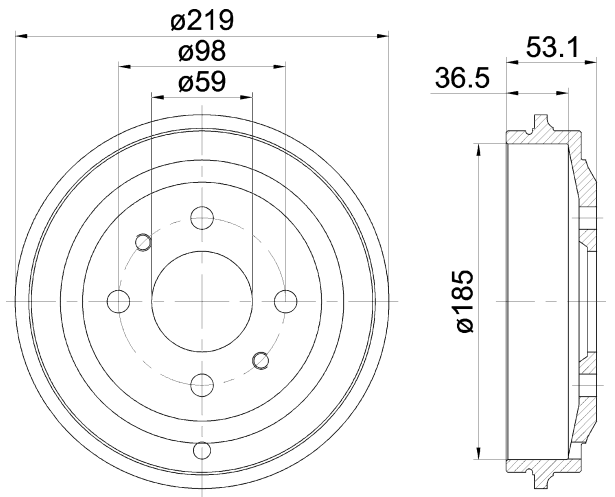

94020200

MERCEDES-BENZ

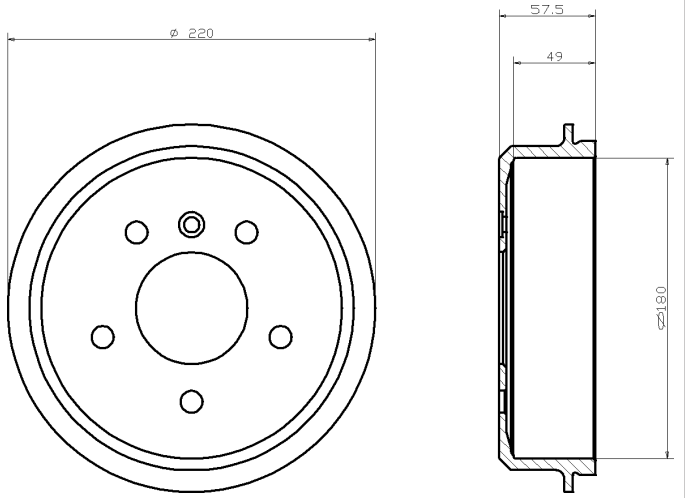

94020300

HOLDEN, OPEL, VAUXHALL

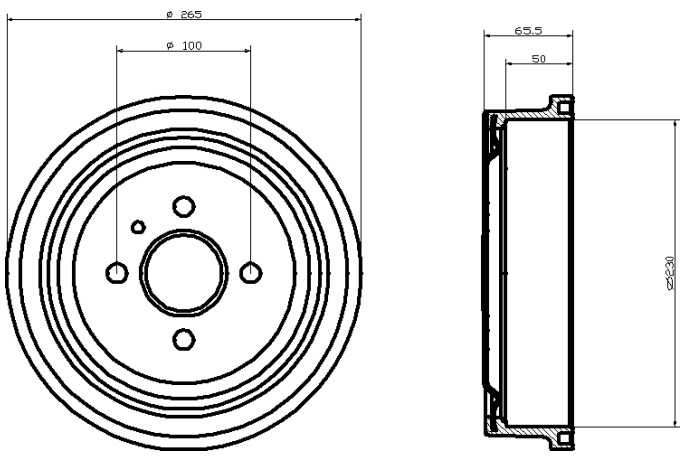

94020900

NISSAN

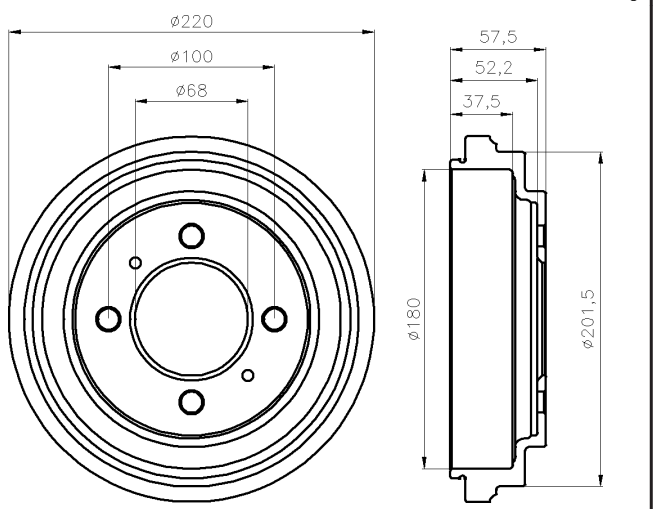

94021000

TOYOTA

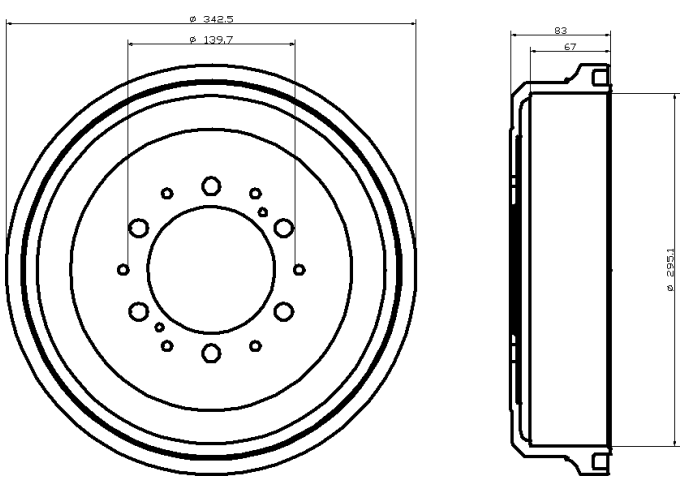

94021200

TOYOTA

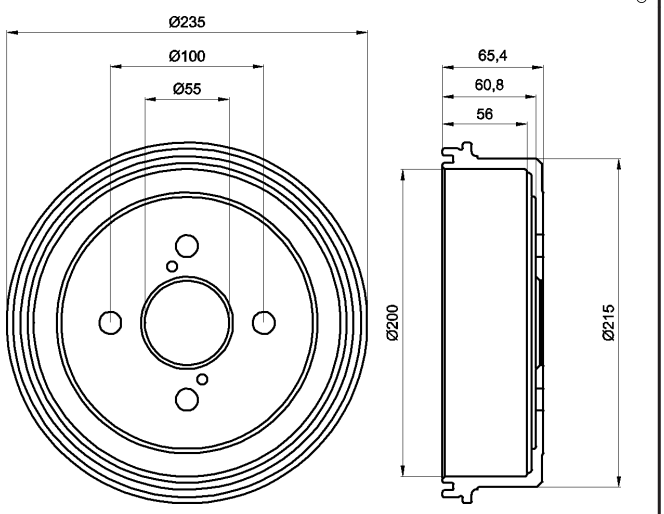

94021800

LAND ROVER

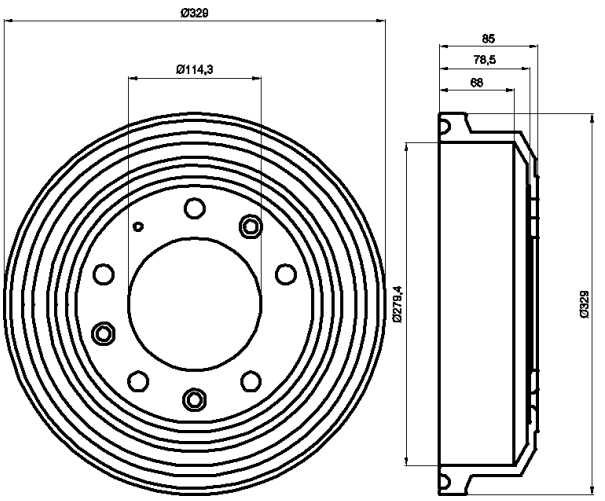

94021900

LADA

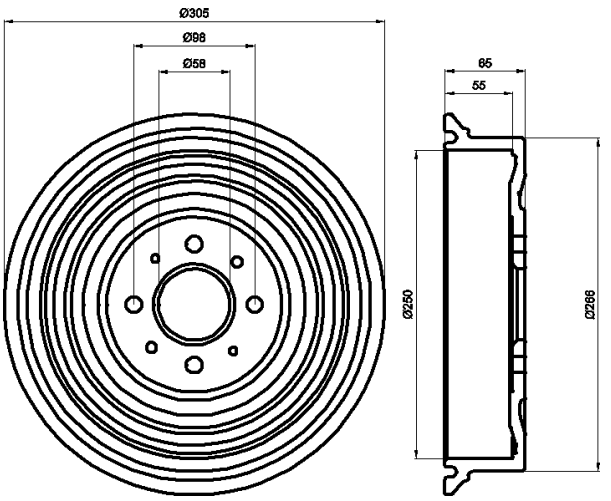

94022000

LDV, NISSAN

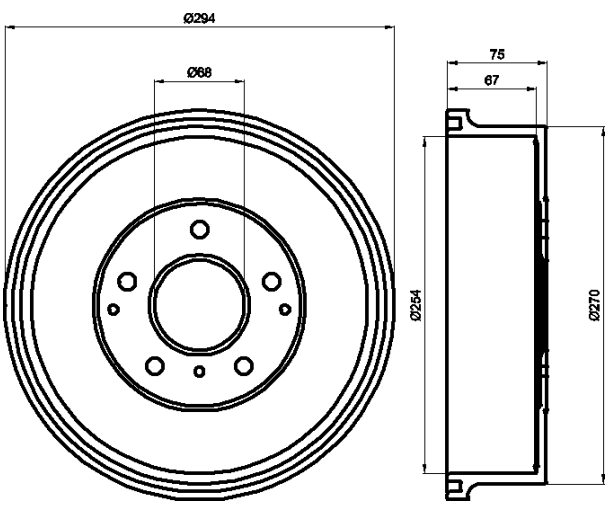

94022100

NISSAN

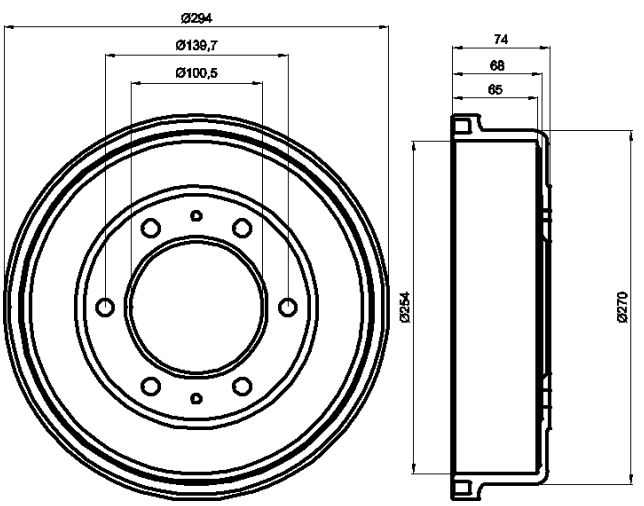

94022200

TOYOTA

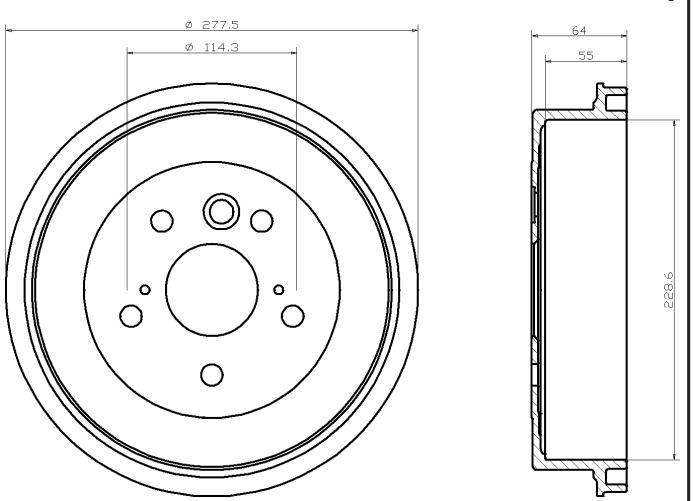

94022300

CHEVROLET, HOLDEN, OPEL, VAUXHALL

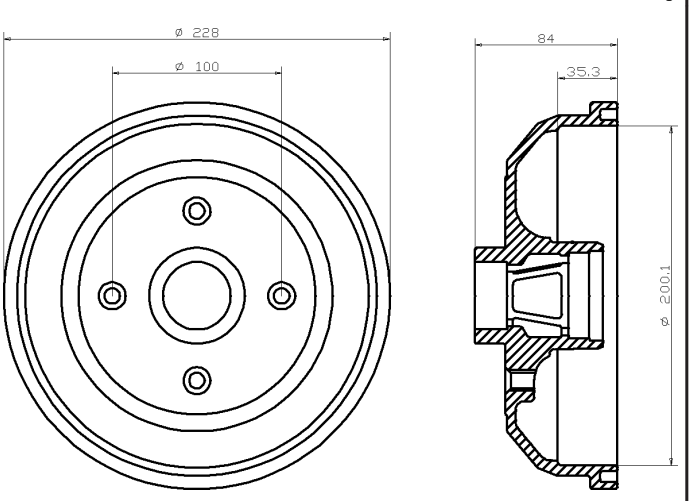

94022400

SMART

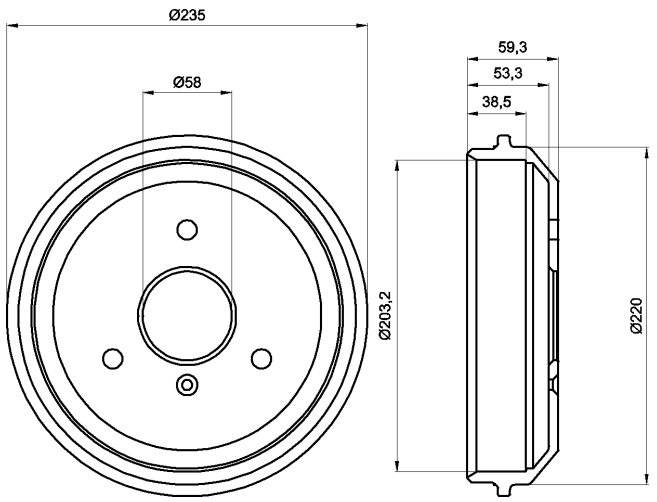

94022500

FORD, FORD AUSTRALIA, SSANGYONG

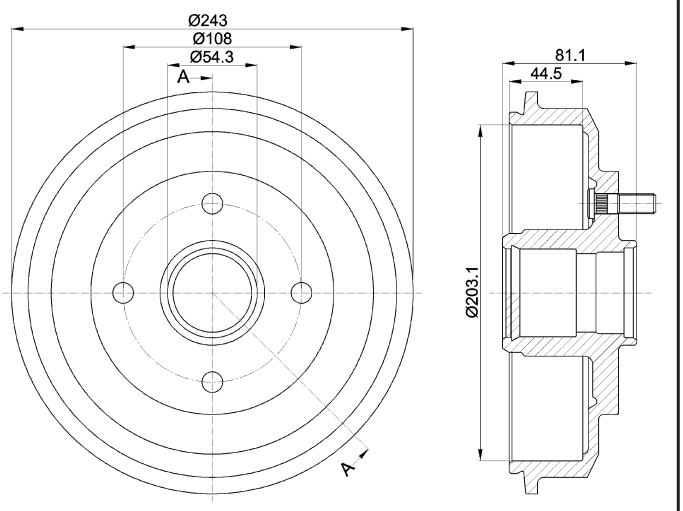

94022600

OPEL, VAUXHALL

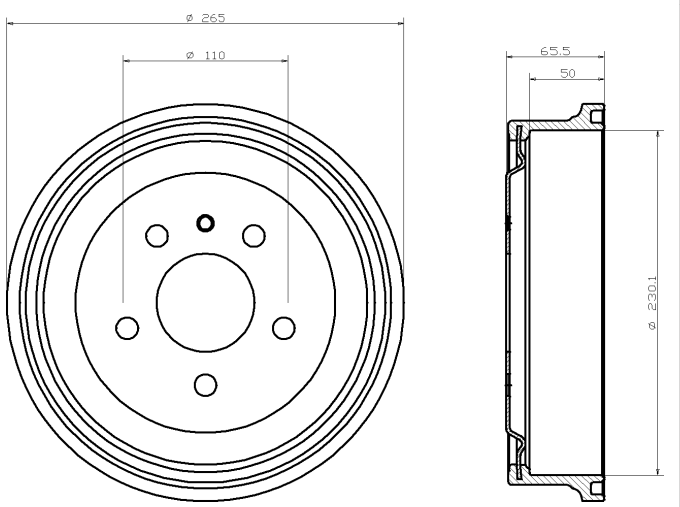

94022700

SEAT, VOLKSWAGEN

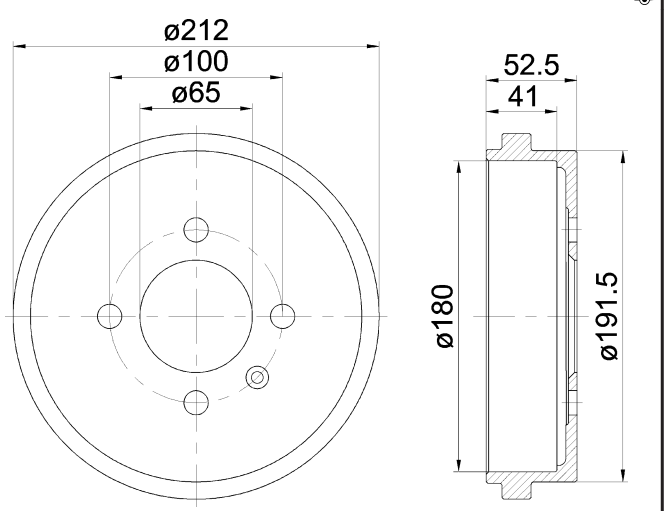

94022800

SEAT, SKODA, VOLKSWAGEN

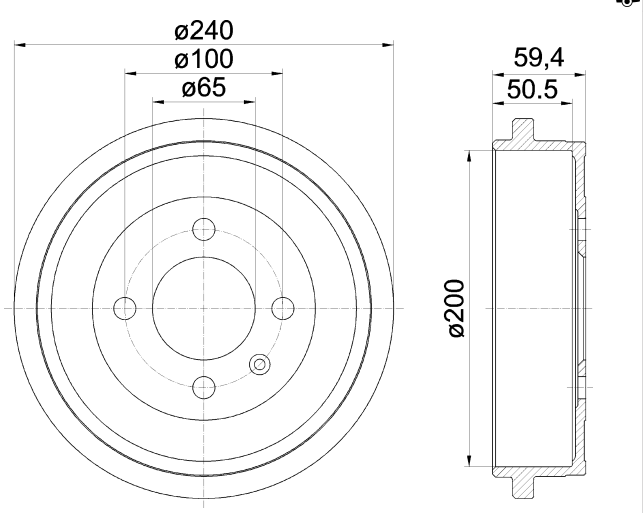

94022900

DAIHATSU

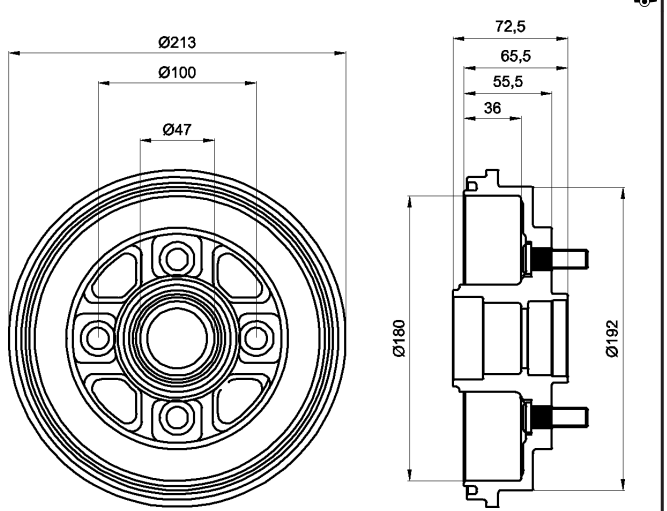

94023000

HONDA

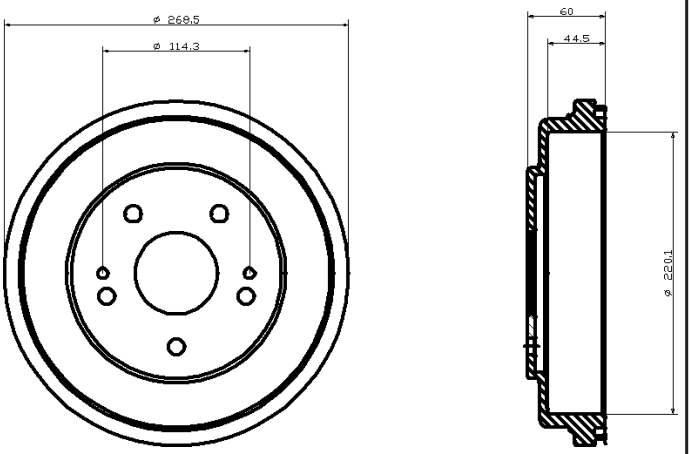

94023300

NISSAN

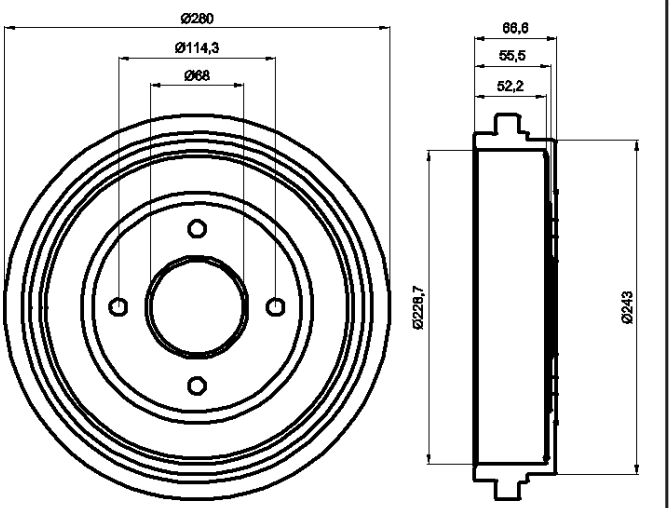

94023400

NISSAN

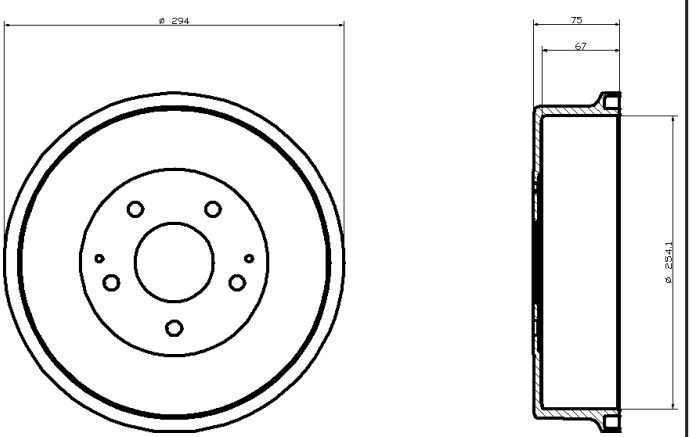

94023600

DACIA, LADA, NISSAN, RENAULT

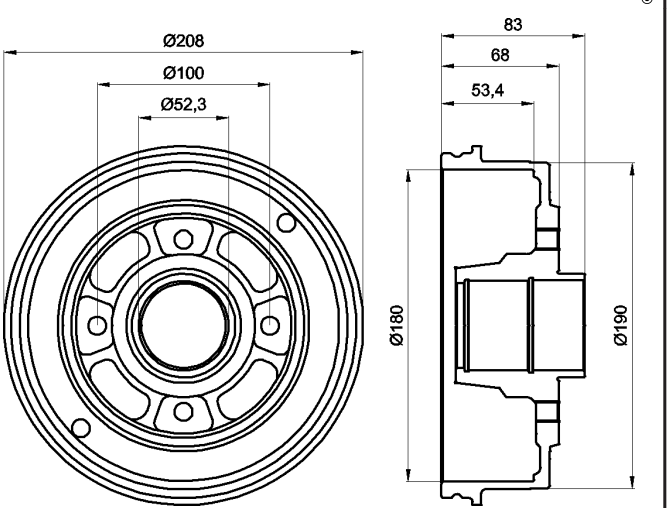

94023800

AUDI, SEAT, SKODA, SKODA (SVW), VOLKSWAGEN

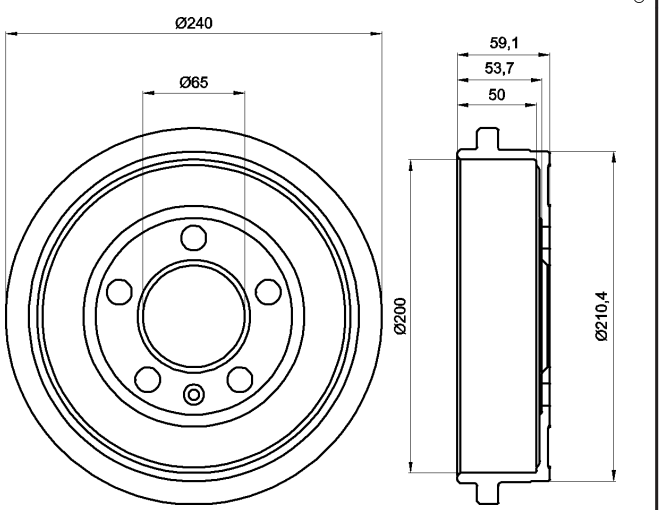

94023900

OPEL, SUZUKI, VAUXHALL

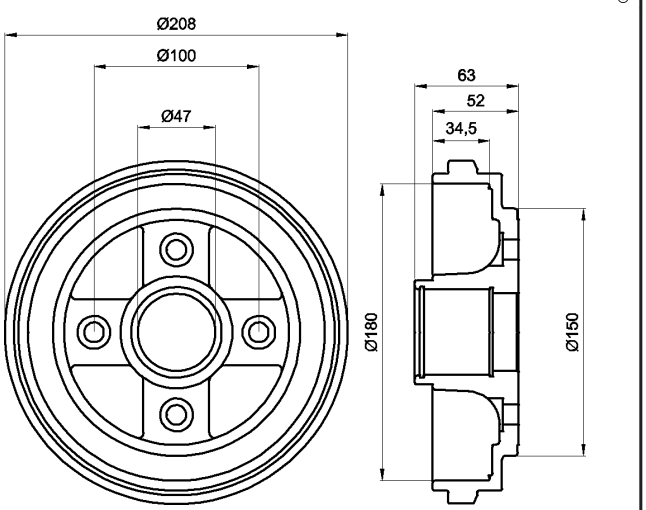

94024100

OPEL, VAUXHALL

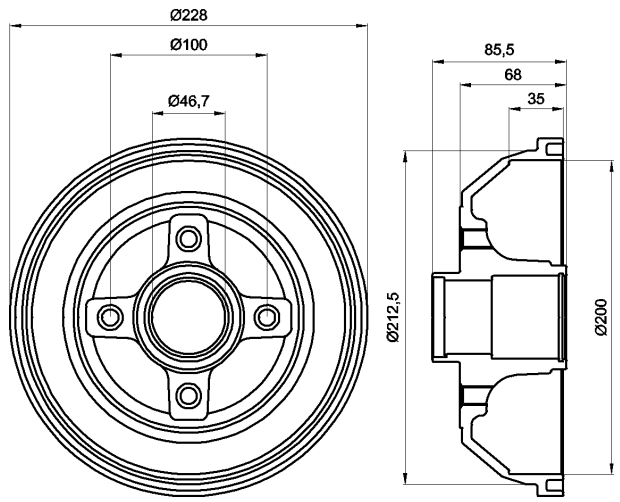

94024200

HOLDEN, OPEL, VAUXHALL

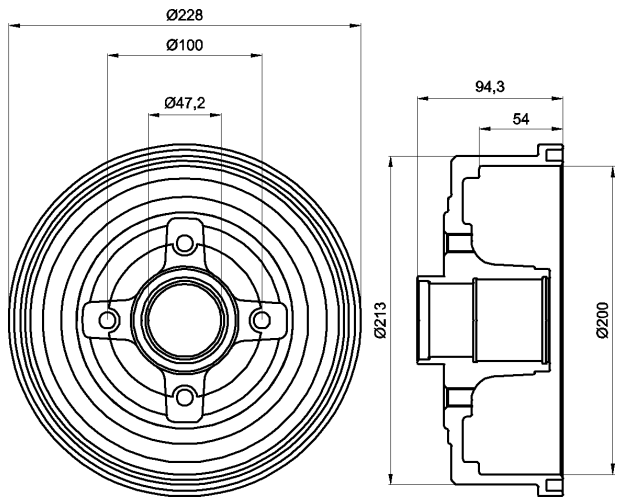

94024300

SKODA, VOLKSWAGEN

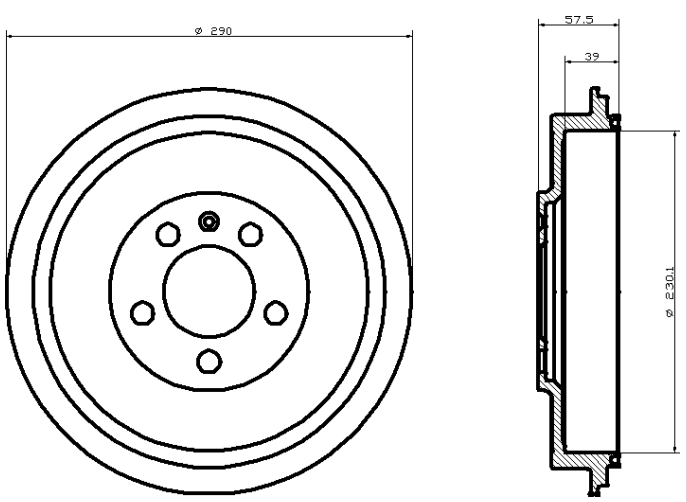

94024400

FORD

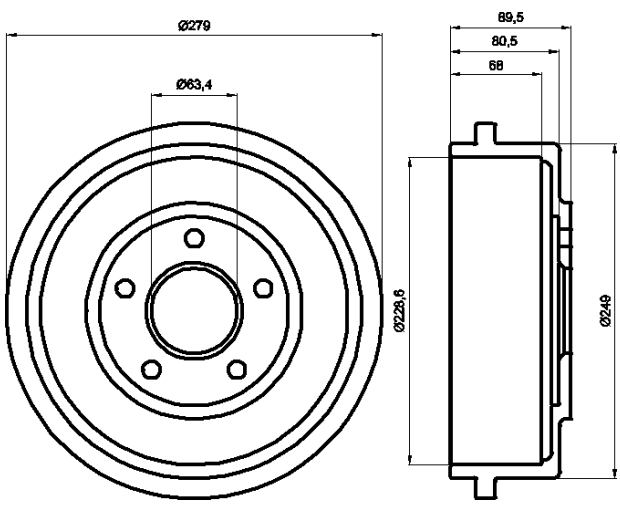

94024500

NISSAN

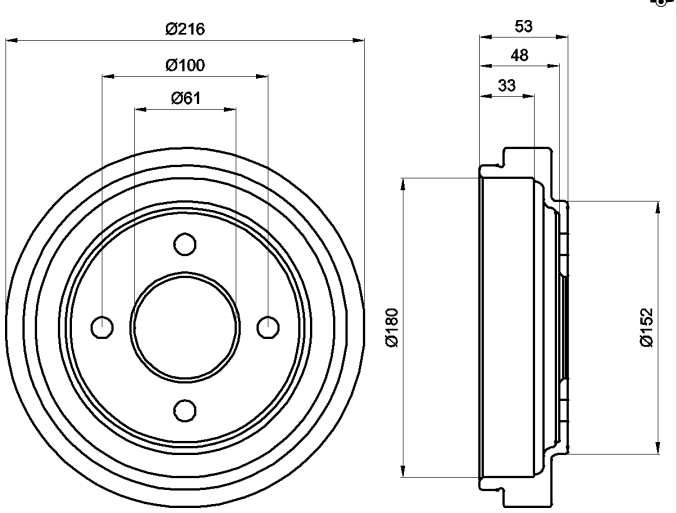

94024600

FORD, FORD AUSTRALIA

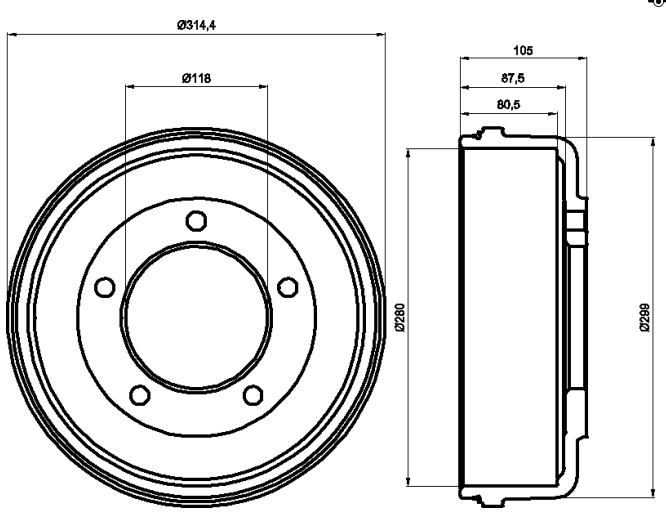

94024700

FORD, FORD AUSTRALIA

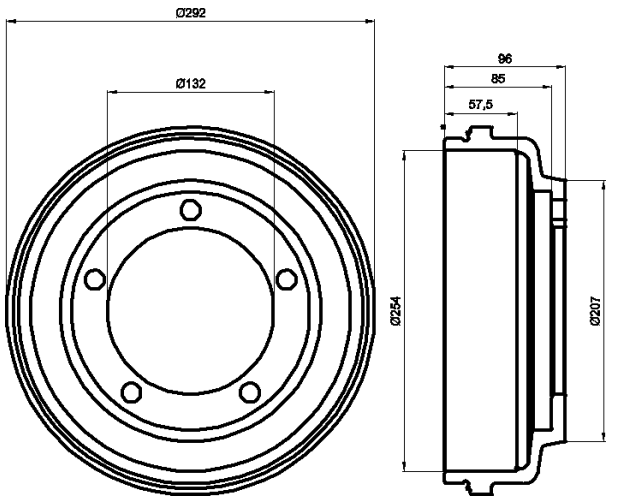

94024800

FORD, FORD AUSTRALIA

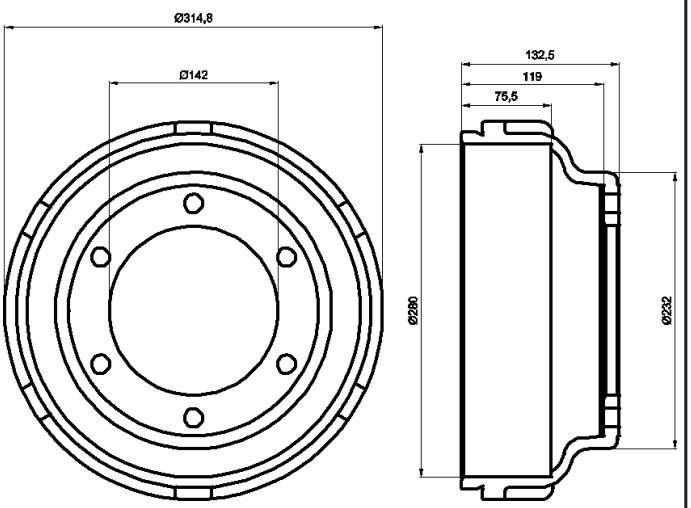

94024900

CITROËN, PEUGEOT

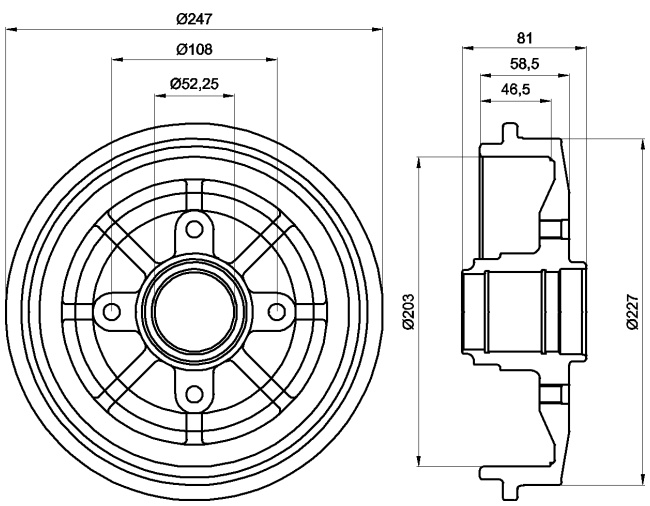

94025400

SUZUKI

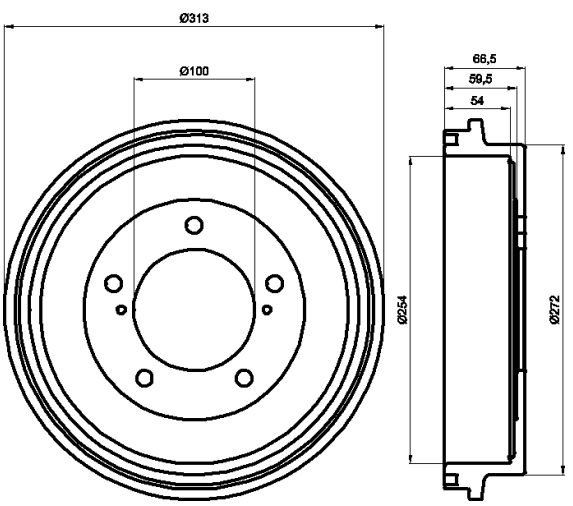

94025500

TOYOTA

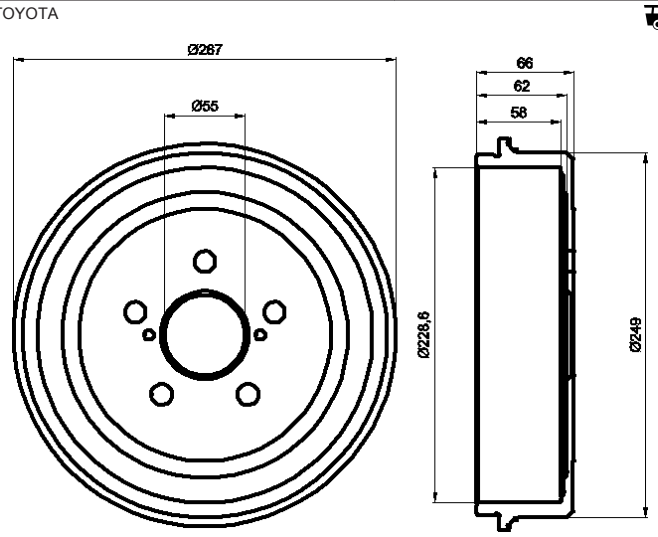

94025600

TOYOTA

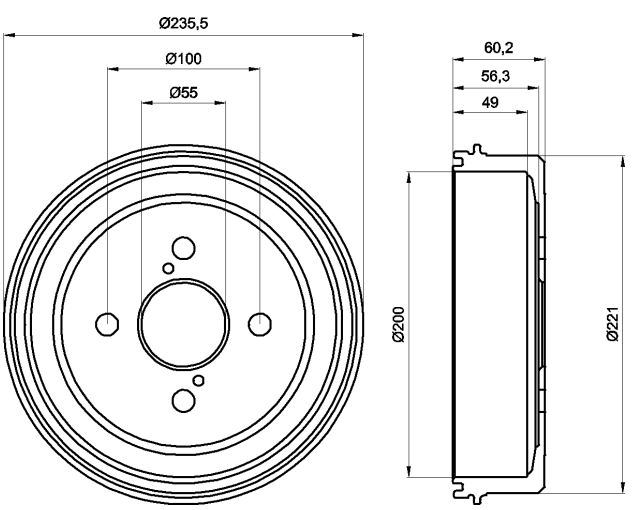

94025900

MITSUBISHI, PROTON

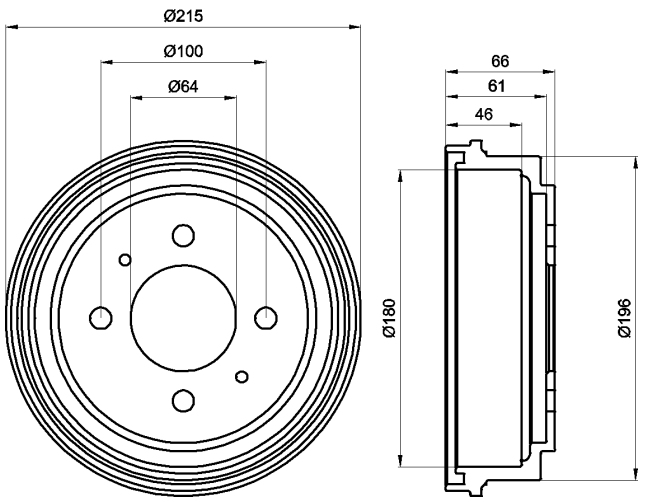

94026000

SUZUKI

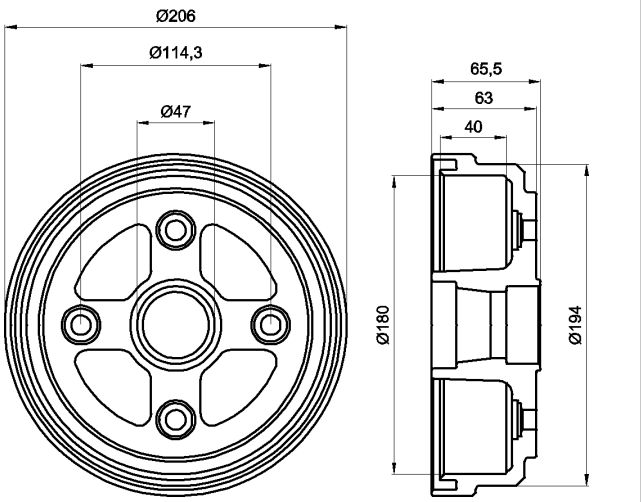

94026100

MITSUBISHI

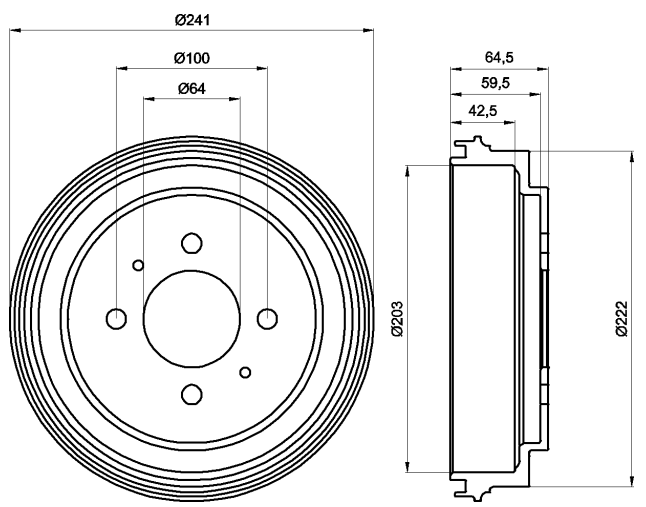

94026200

CHEVROLET, DAEWOO, PONTIAC

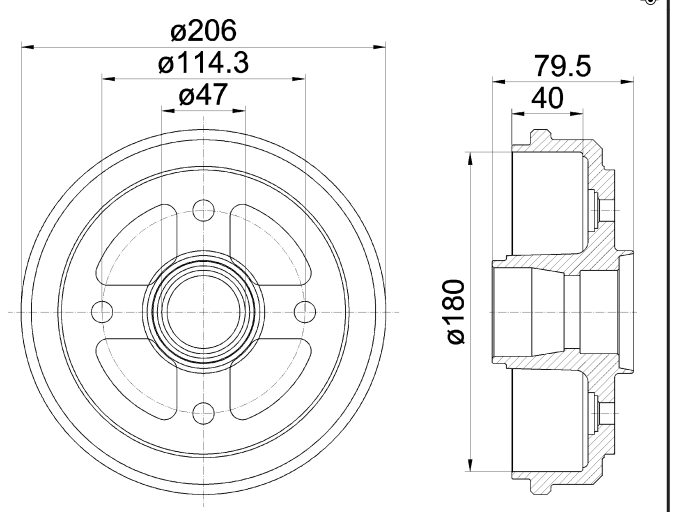

94026300

SUZUKI

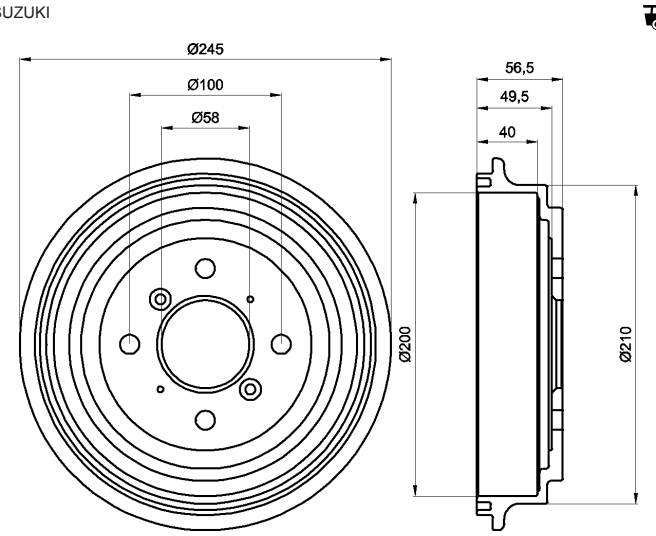

94026500

CITROËN, PEUGEOT, TOYOTA

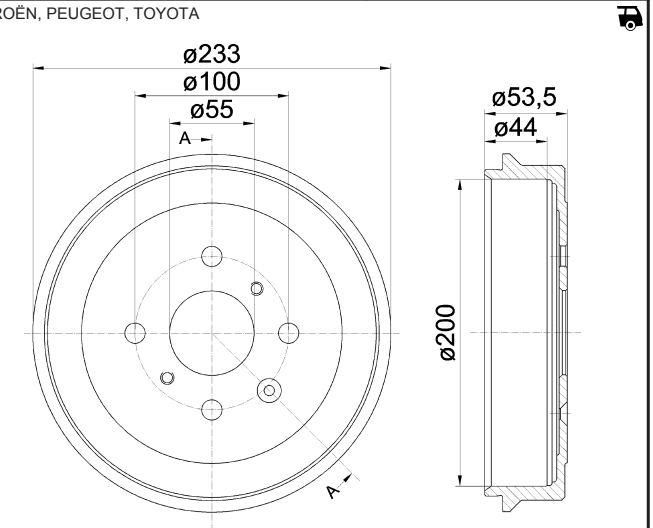

94026600

CITROËN, CITROËN (DF-PSA), PEUGEOT

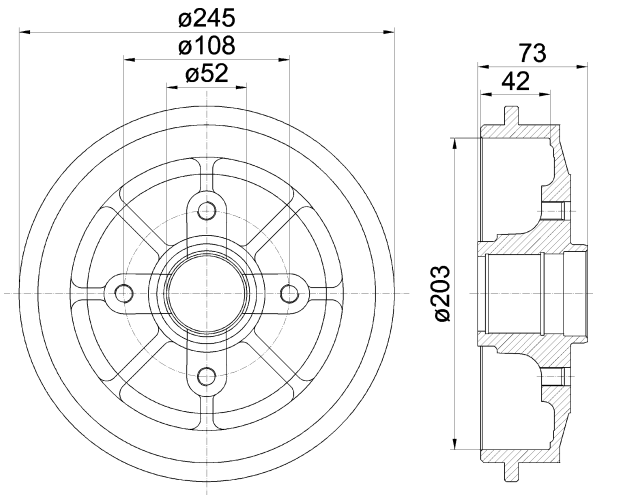

94026700

FORD, FORD AUSTRALIA, MAZDA

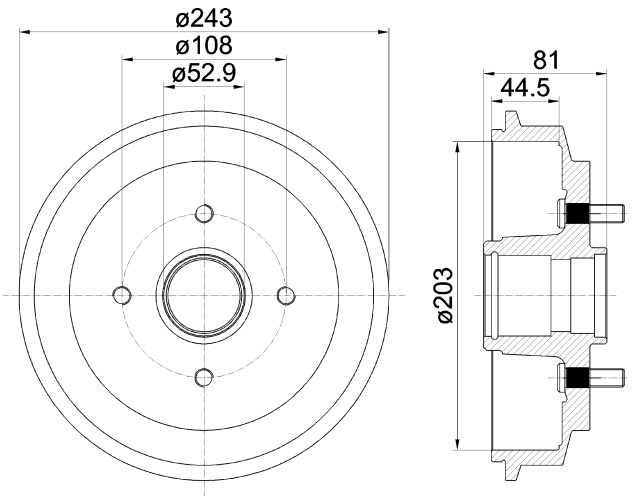

94026800

NISSAN

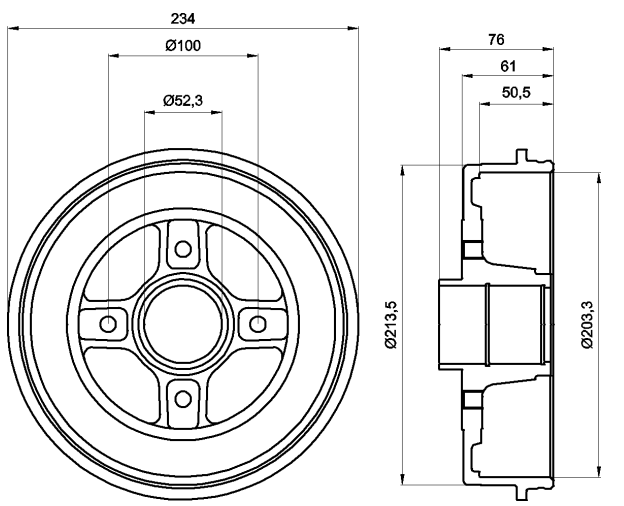

94026900

NISSAN

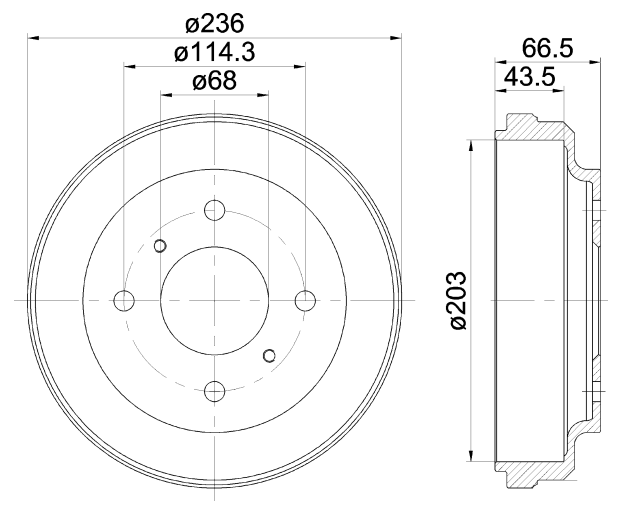

94027000

OPEL, RENAULT, VAUXHALL

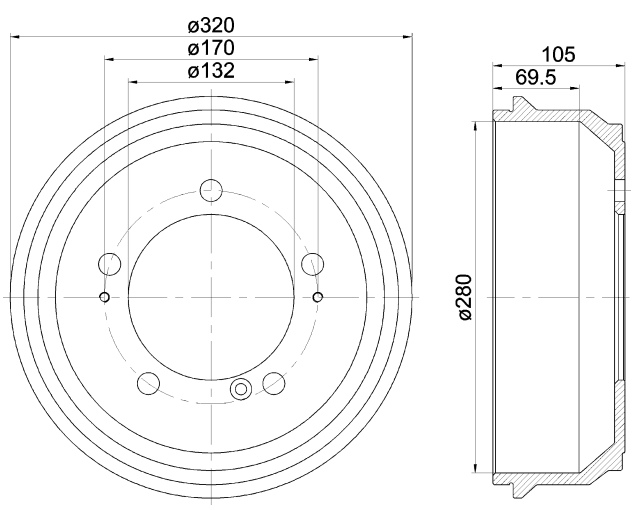

94027100

NISSAN, RENAULT

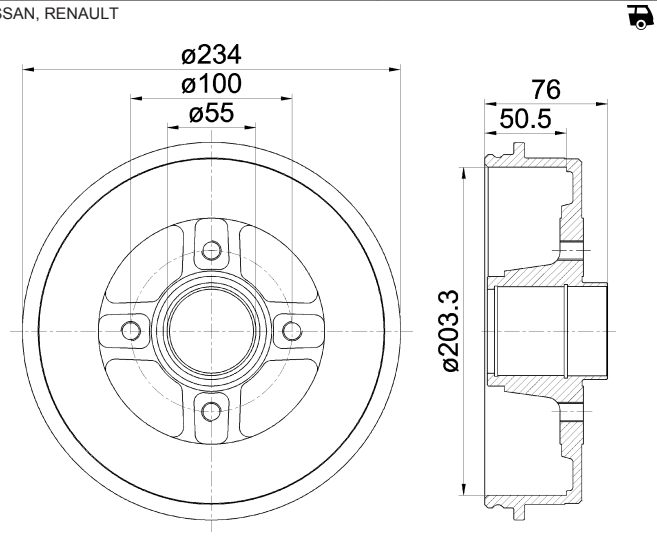

94027200

FIAT, OPEL, VAUXHALL

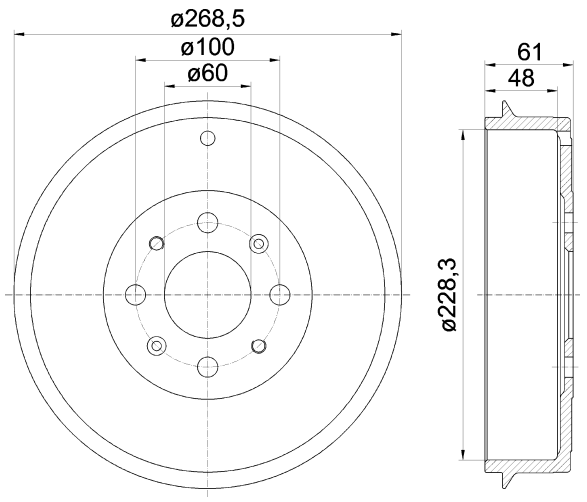

94027400

FORD, FORD AUSTRALIA

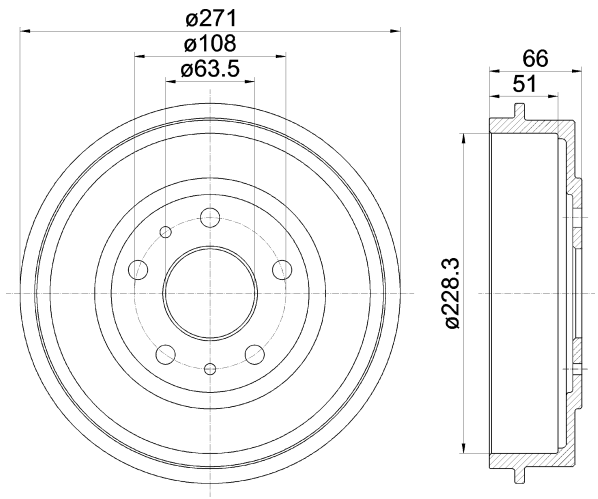

94027500

RENAULT

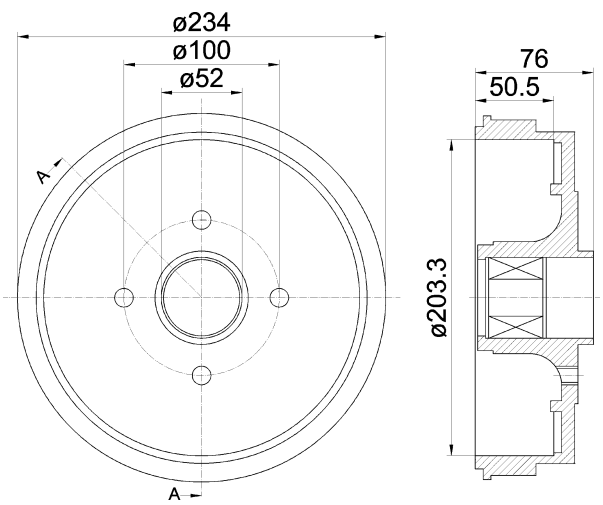

94027600

FIAT, OPEL, VAUXHALL

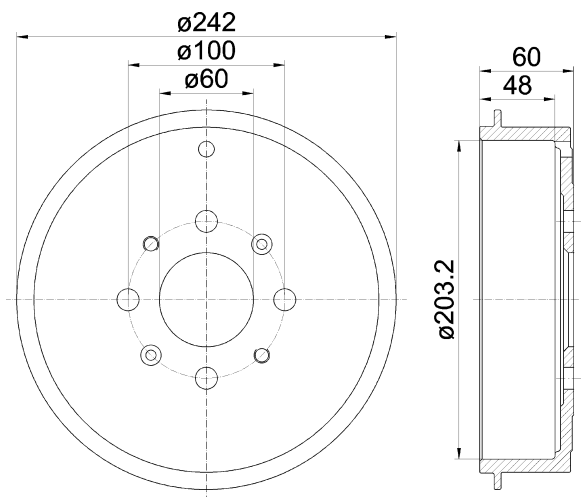

94027800

OPEL, SUZUKI, VAUXHALL

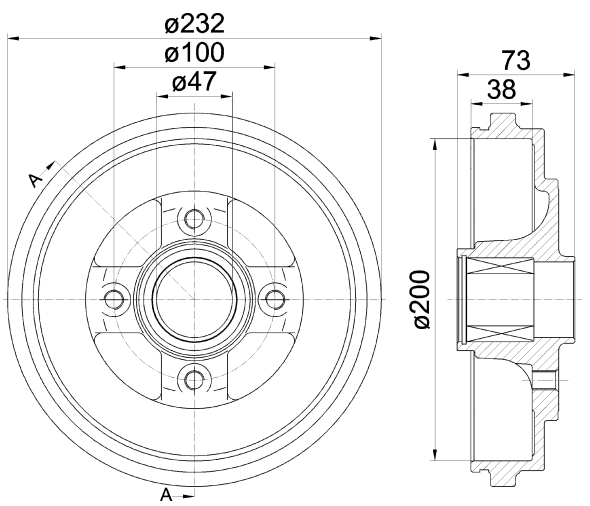

94028000

HONDA

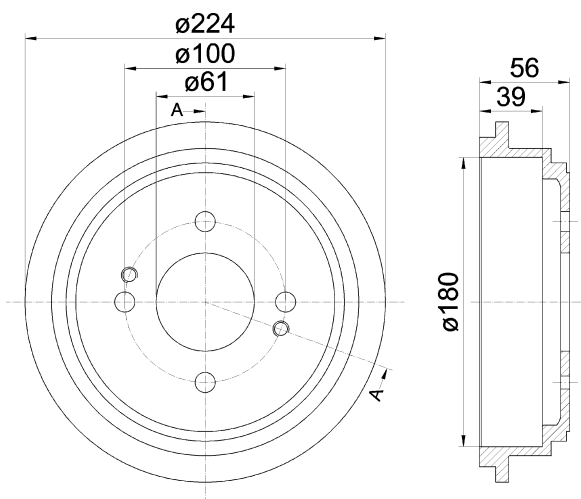

94028100

CHRYSLER, DODGE, PLYMOUTH

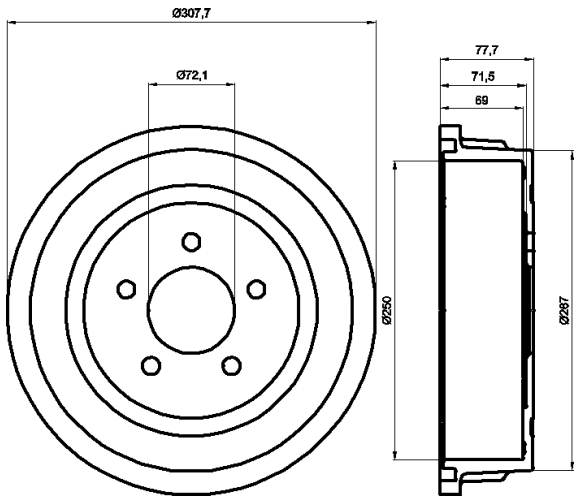

94028200

CITROËN, PEUGEOT

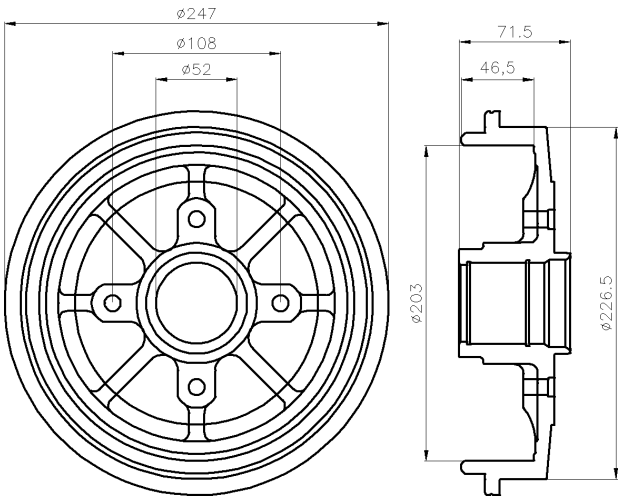

94028300

RENAULT

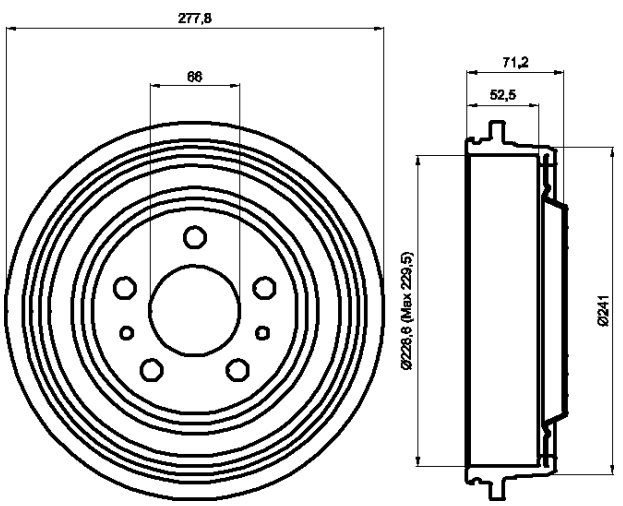

94028500

MAZDA

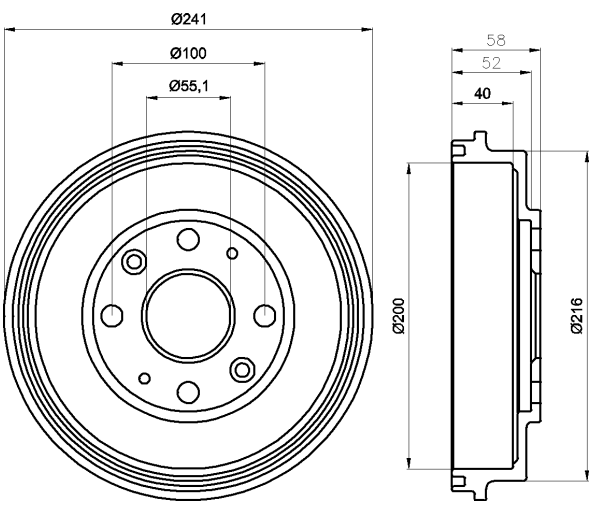

94028700

KIA

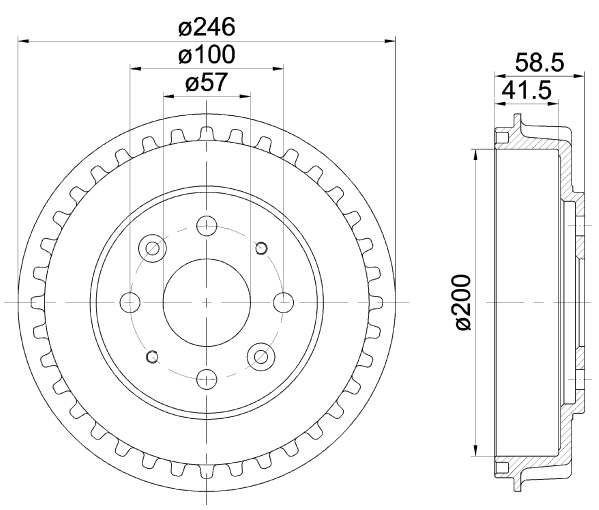

94029300

TOYOTA

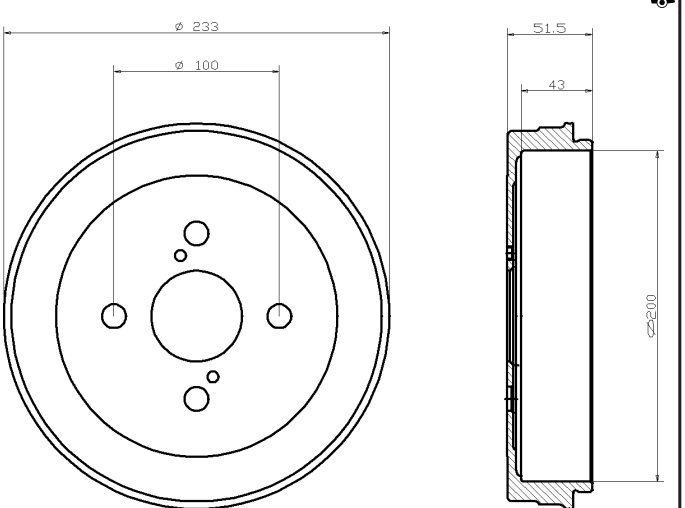

Illustrations

94029400

TOYOTA

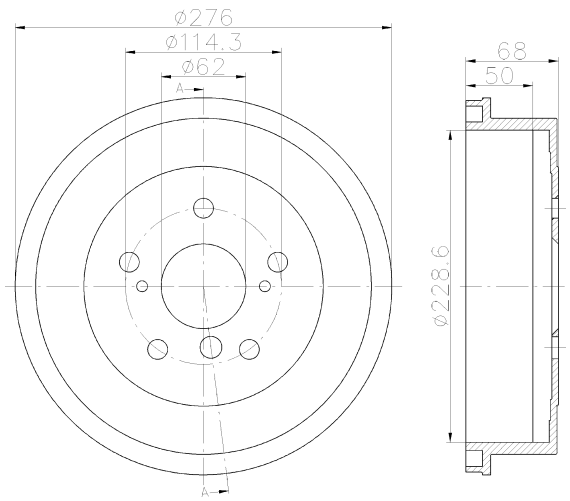

94029500

SEAT, VOLKSWAGEN

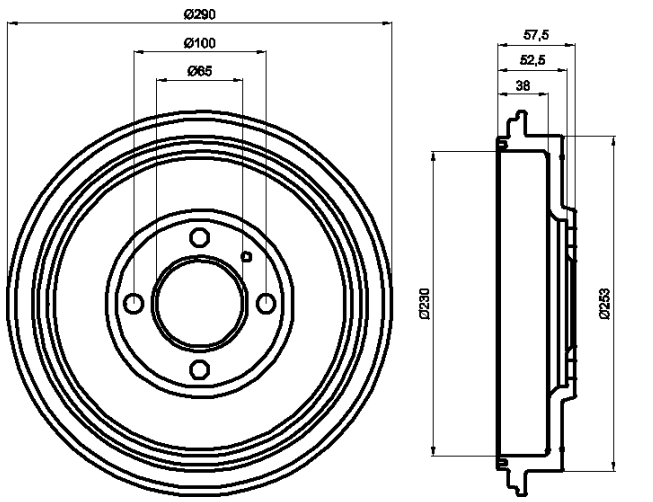

94029900

NISSAN

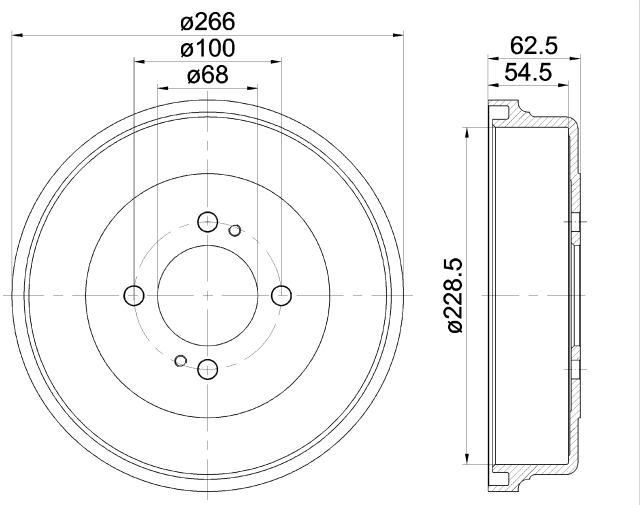

94030000

MITSUBISHI

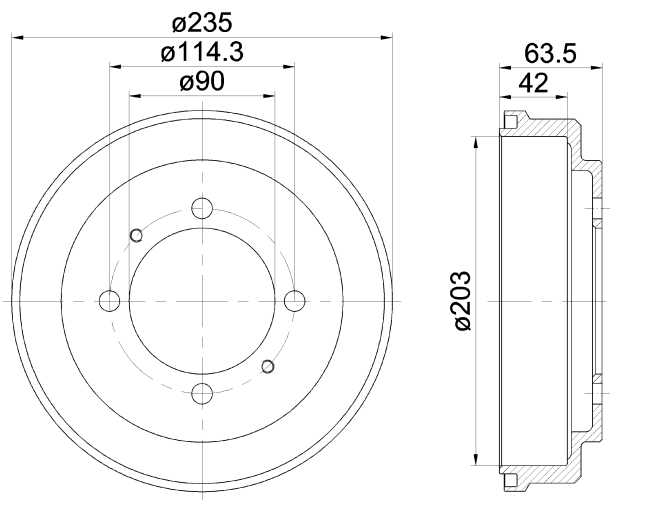

94030100

MITSUBISHI

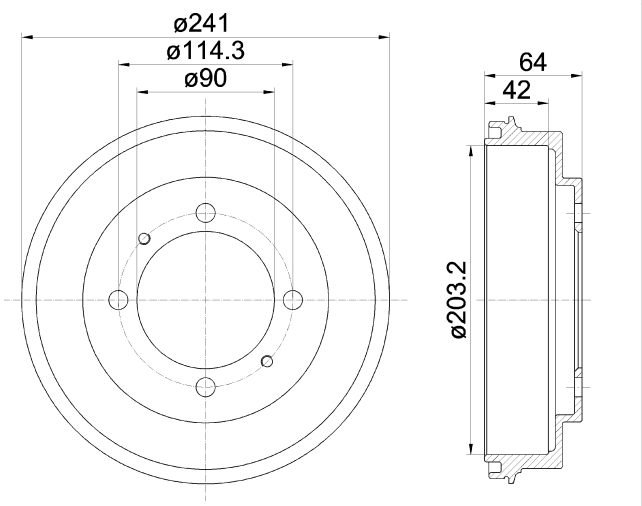

94030200

DODGE, HYUNDAI, KIA, KIA (DYK)

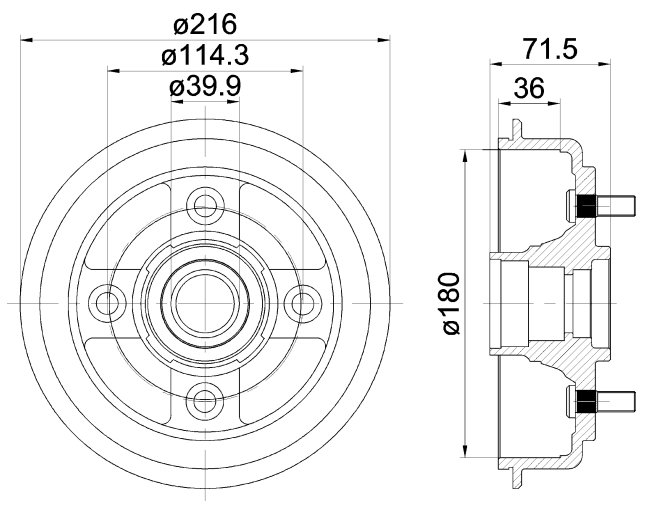

94030300

DODGE, HYUNDAI

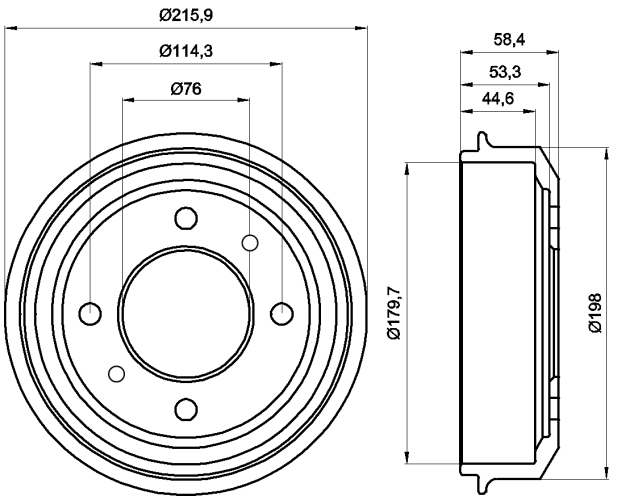

94030500

KIA

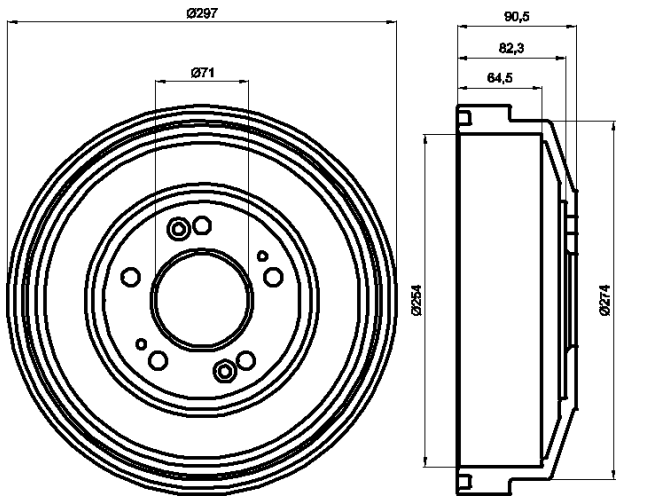

94030600

KIA

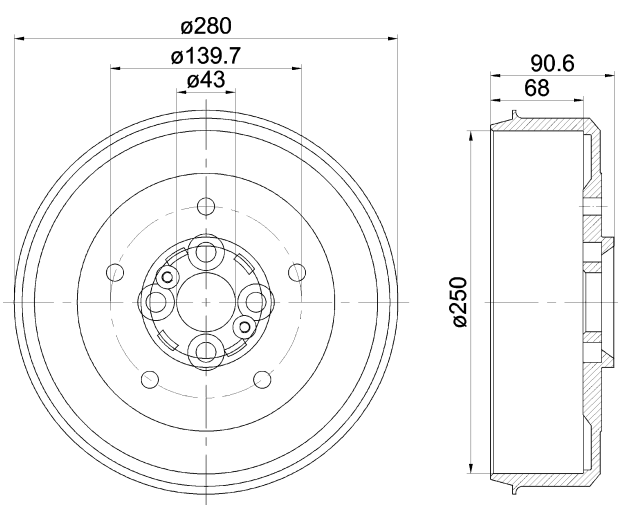

94030800

OPEL, RENAULT, VAUXHALL

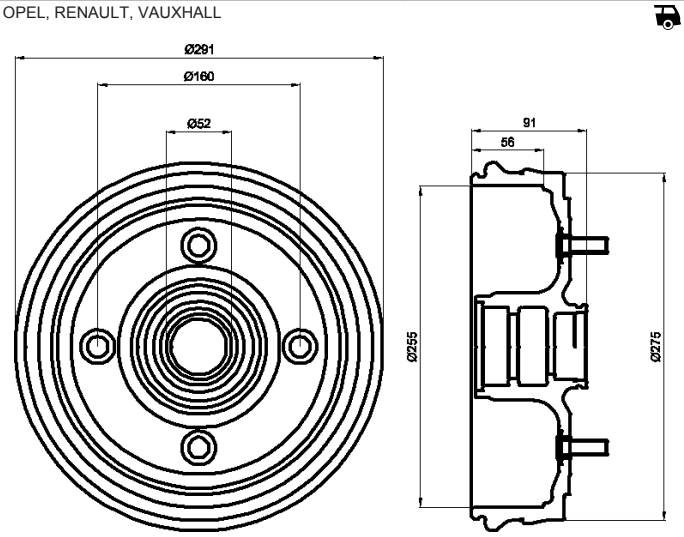

94030900

LAND ROVER

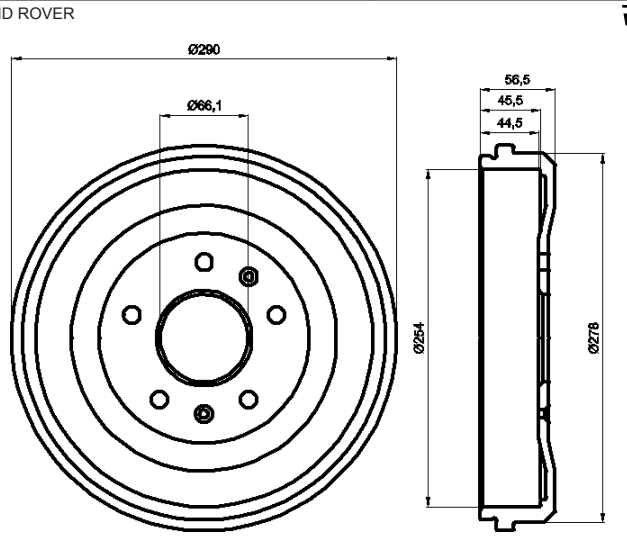

94031000

CHEVROLET, SUBARU

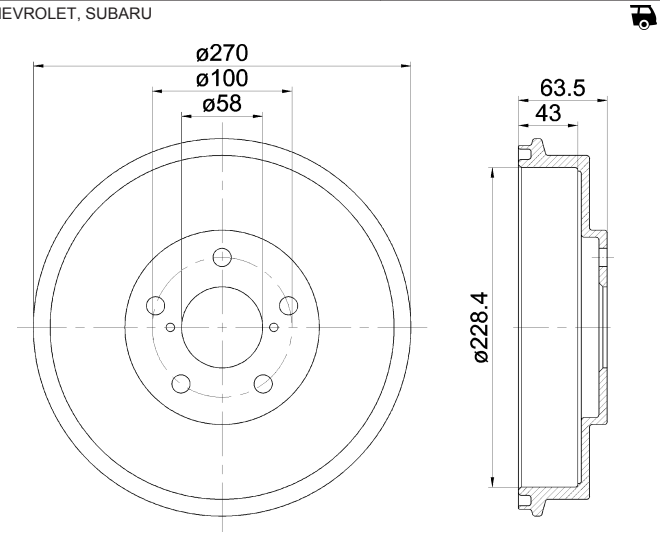

Illustrations

94031500

HOLDEN, OPEL, VAUXHALL

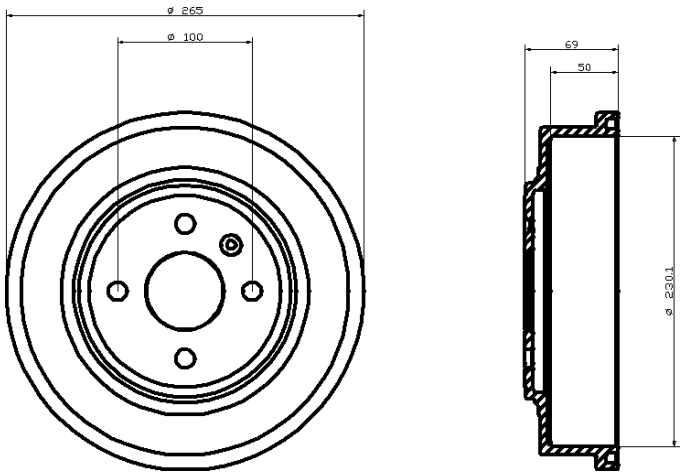

94031600

KIA

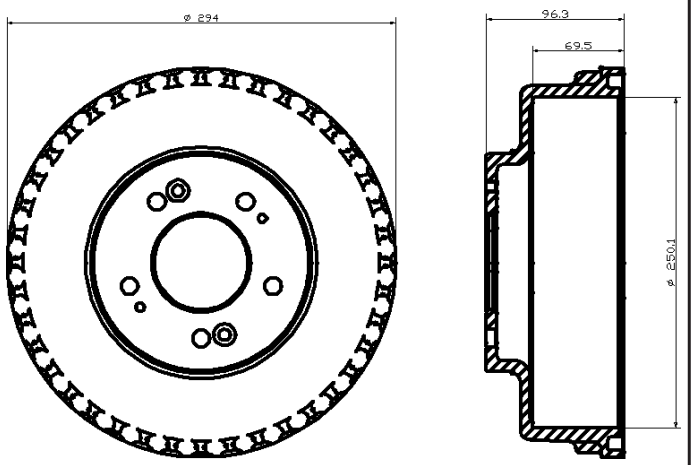

94031700

HONDA

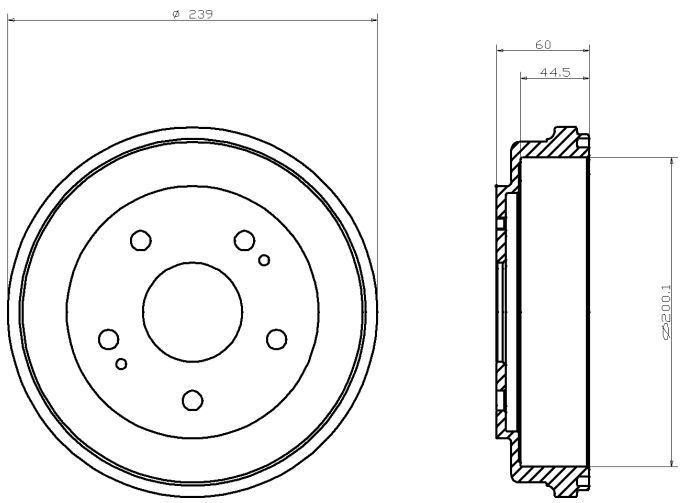

94032000

CARBODIES, LTI

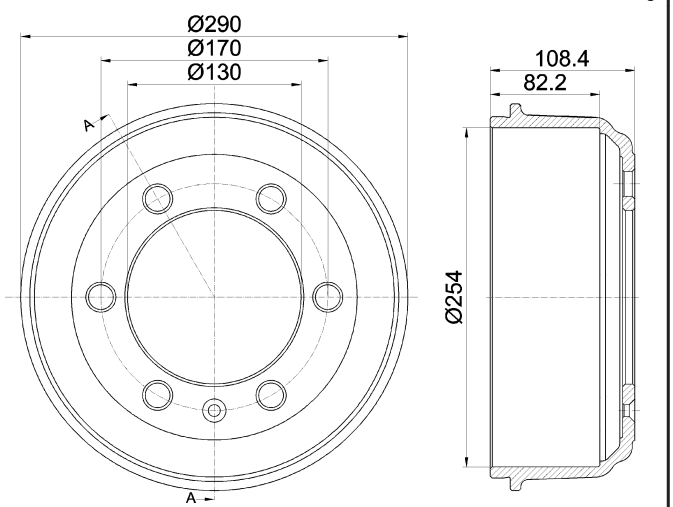

94032100

CHEVROLET, CHEVROLET (SGM), DAEWOO

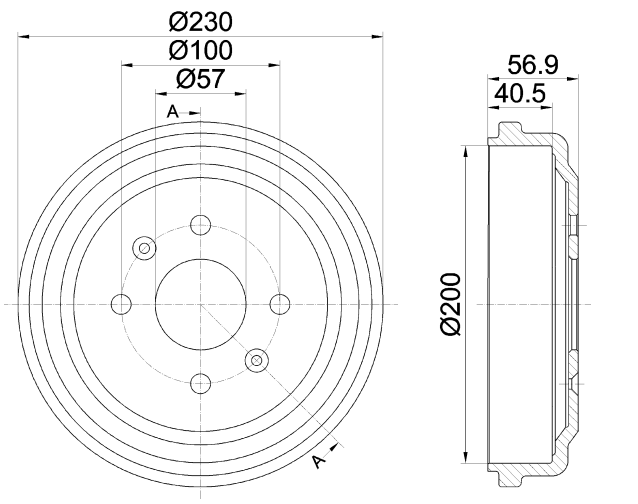

94032300

RENAULT

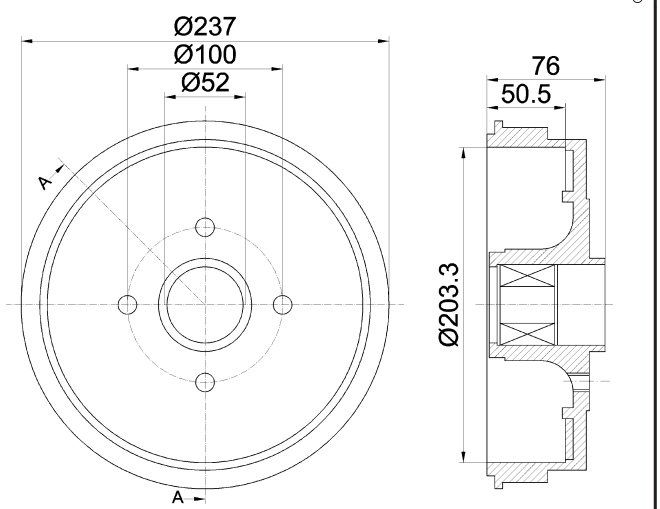

94032400

SUZUKI

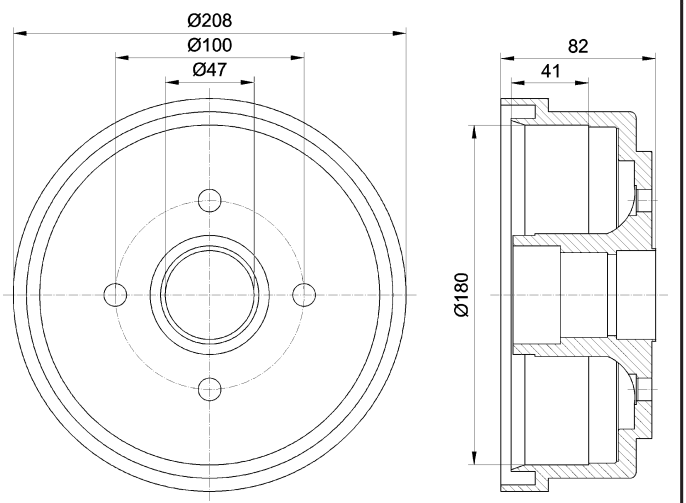

94032500

SUZUKI

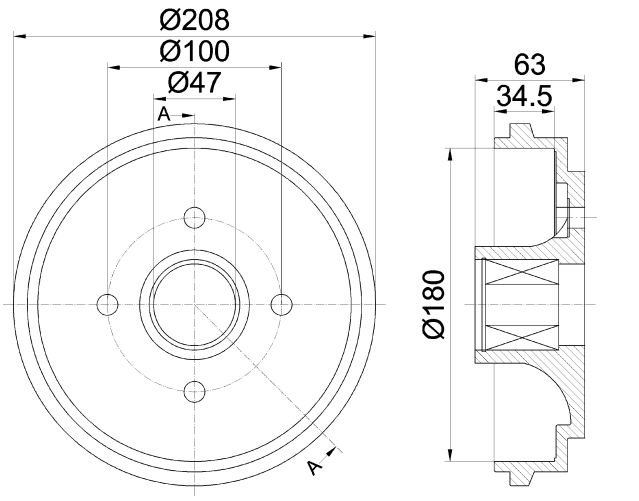

94032600

SUBARU, SUZUKI

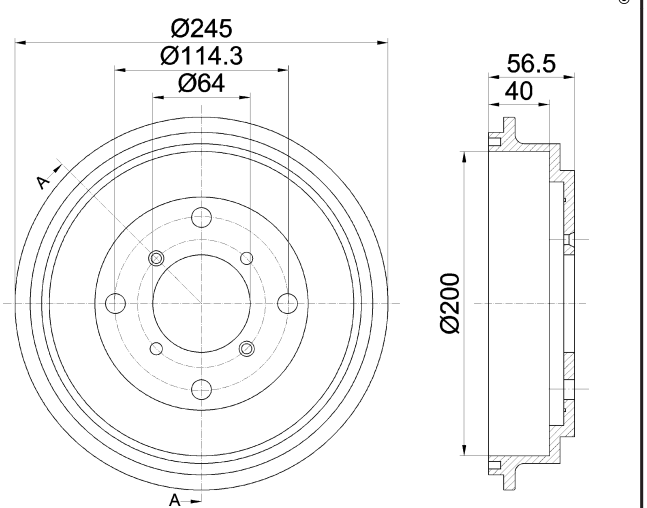

94032700

DAIHATSU

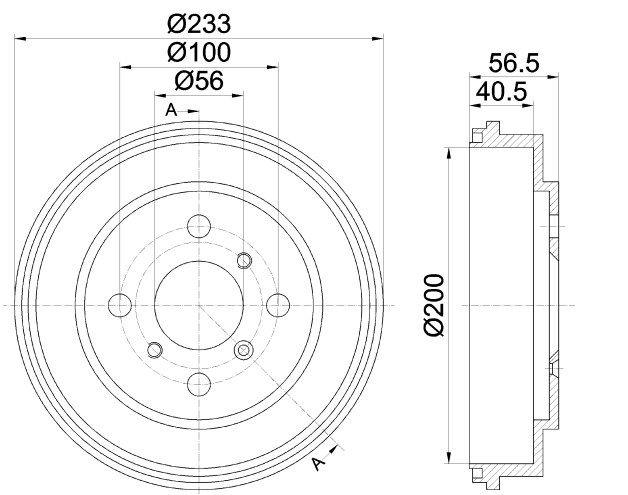

94032800

LAND ROVER

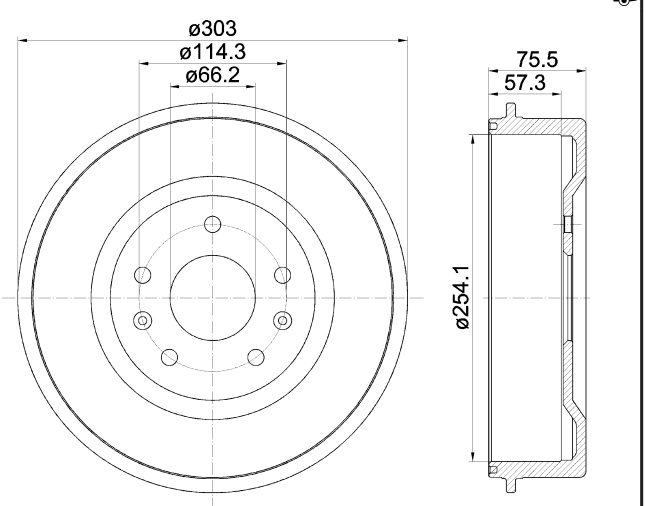

94032900

CITROËN, FIAT, PEUGEOT

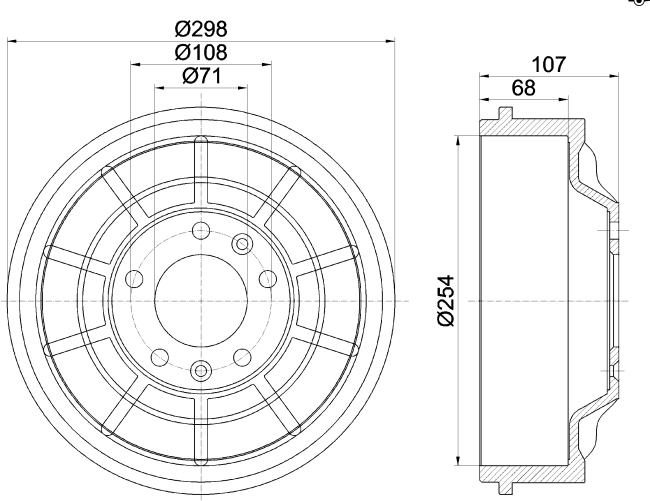

94033200

OPEL, VAUXHALL

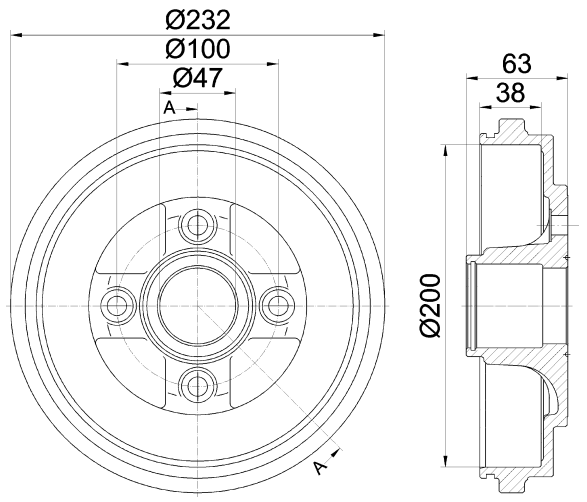

94033300

HYUNDAI, INOKOM

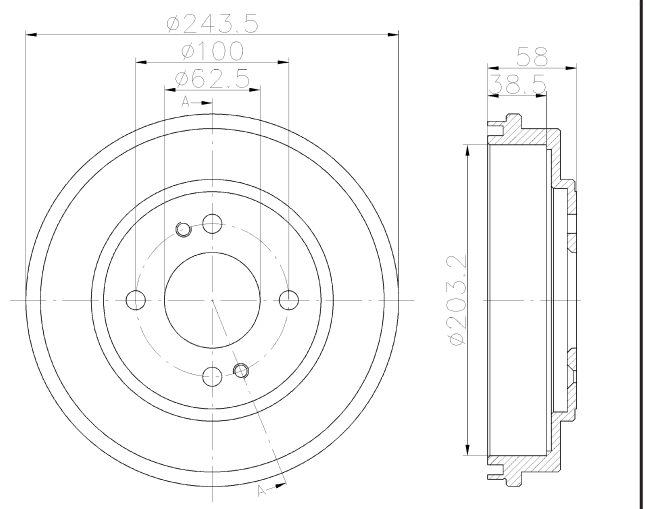

94033500

FORD, FORD ASIA / OZEANIA, FORD AUSTRALIA, MAZDA

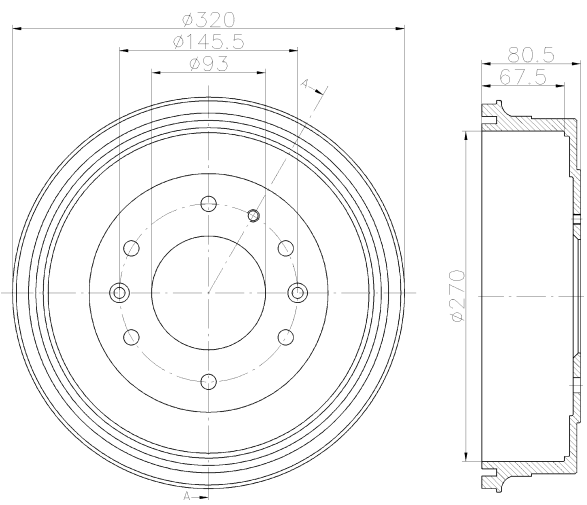

94033600

MITSUBISHI

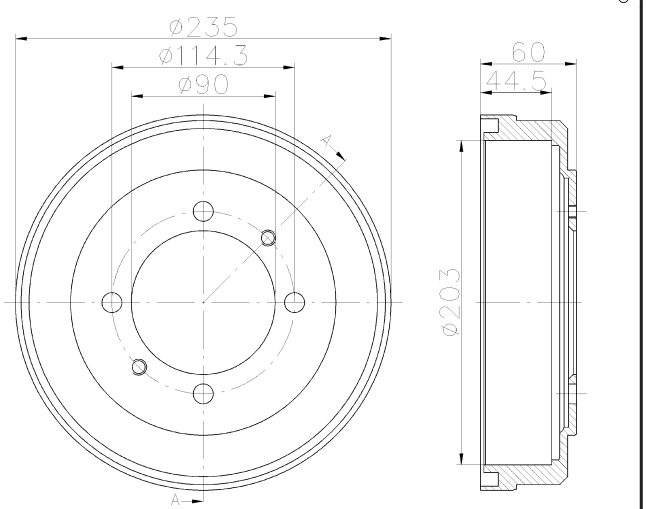

94033800

RENAULT

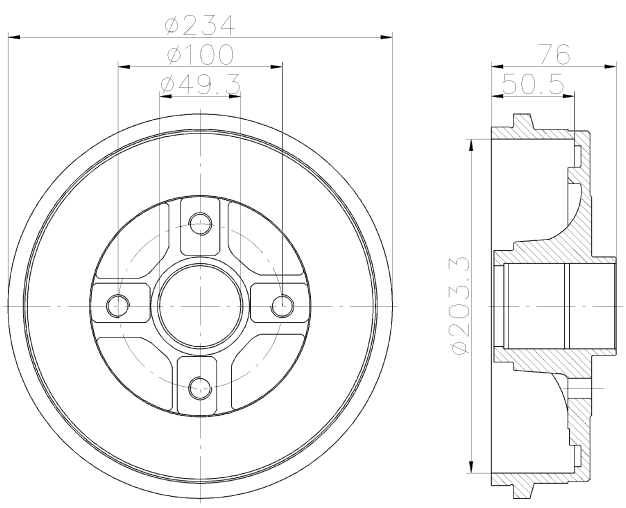

94033900

DAIHATSU, PERODUA

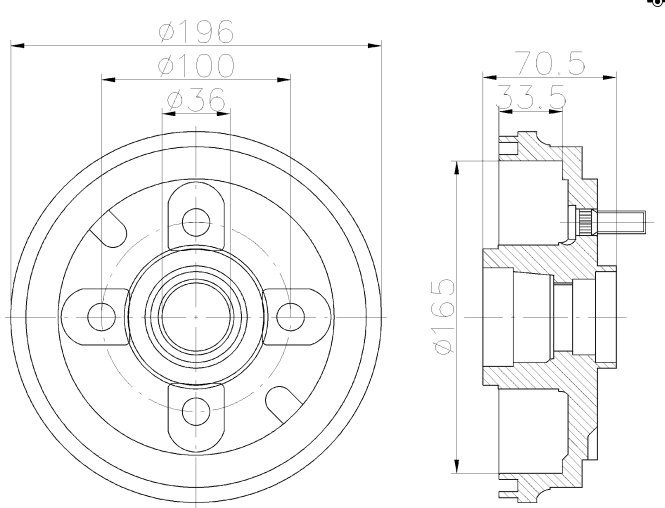

94034000

CITROËN, PEUGEOT

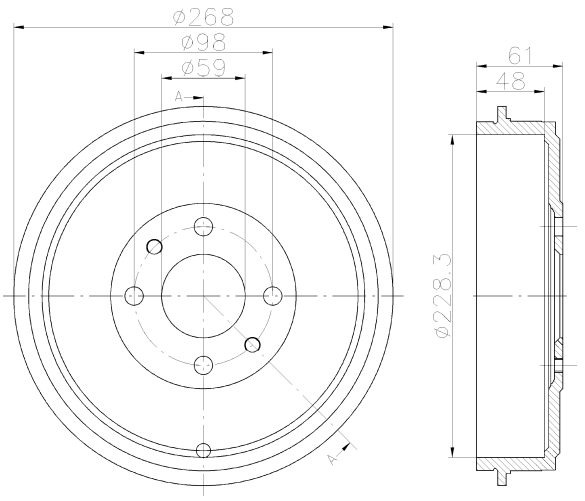

94034100

CITROËN, PEUGEOT

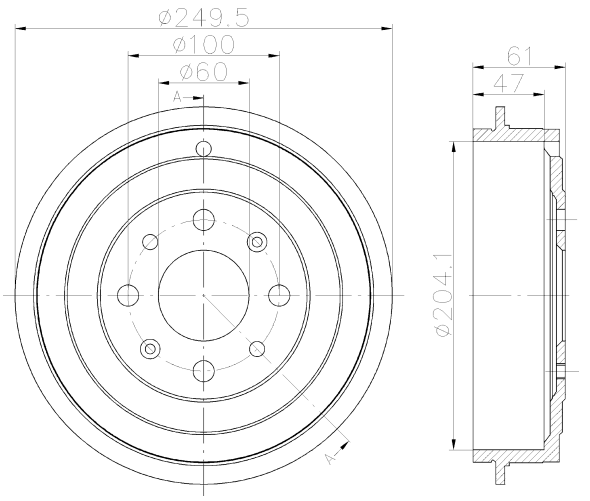

94034200

TOYOTA

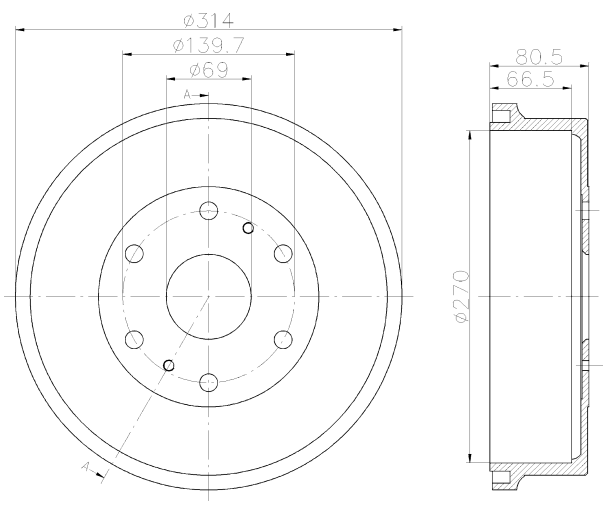

94034300

DAIHATSU, HUALI, PREMIER, TOYOTA, TOYOTA (FAW)

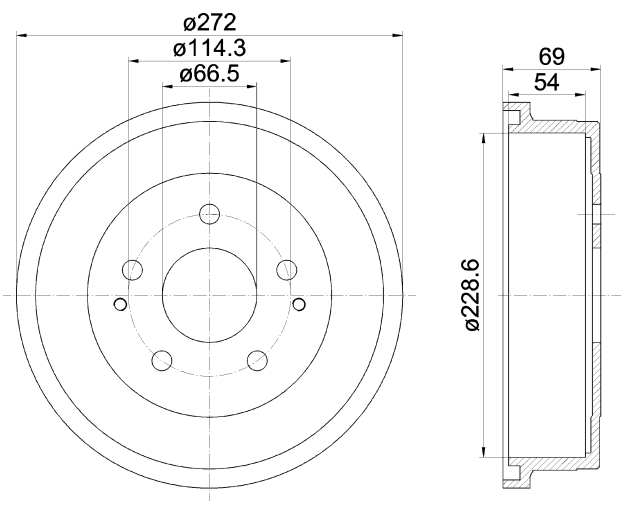

94034400

DAIHATSU, HUALI, TOYOTA (FAW)

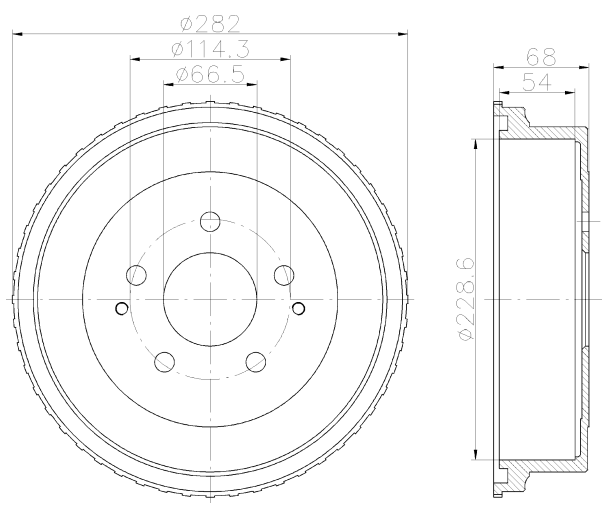

94034500

KIA

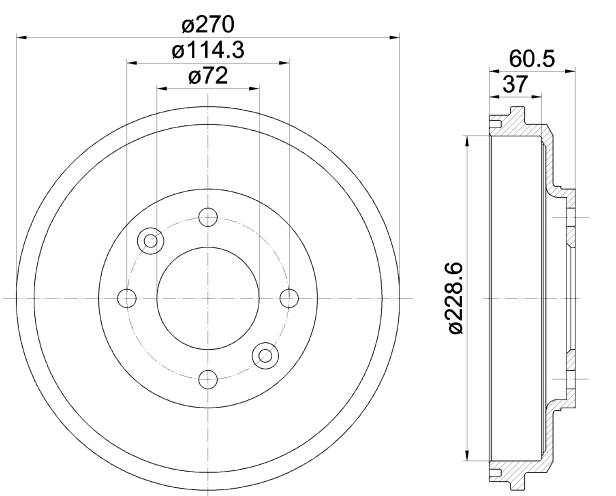

94034600

TOYOTA

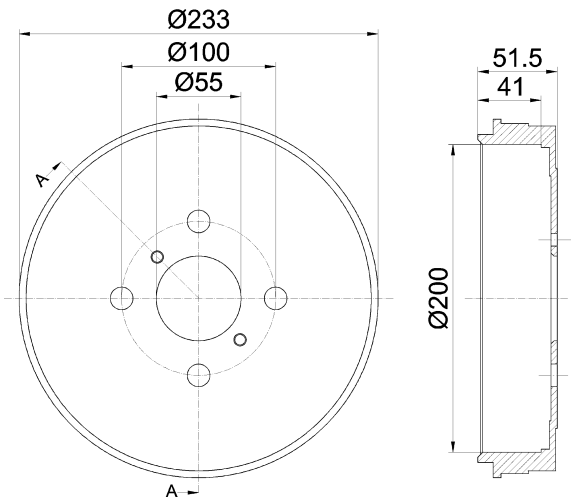

94034900

HYUNDAI

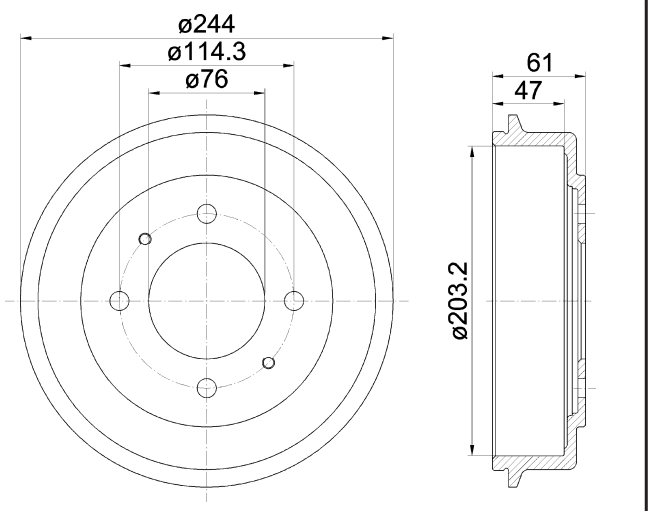

94035100

CHEVROLET, FSO, ZAZ

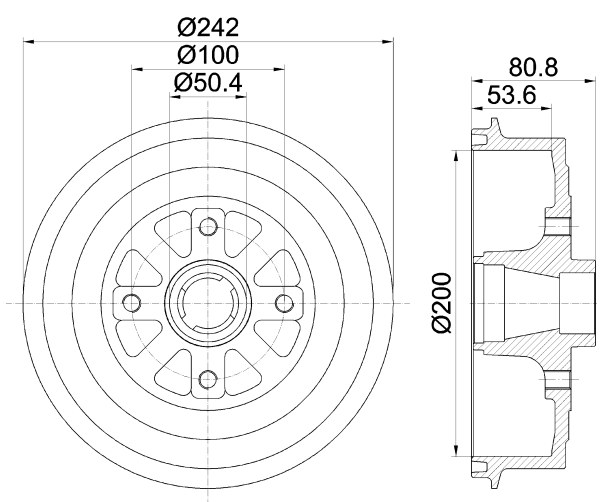

94035300

MITSUBISHI

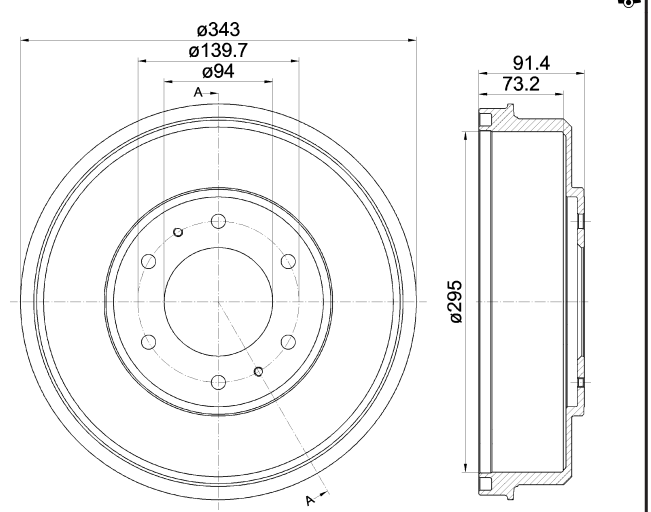

94035400

FORD, FORD ASIA / OZEANIA, FORD AUSTRALIA, MAZDA

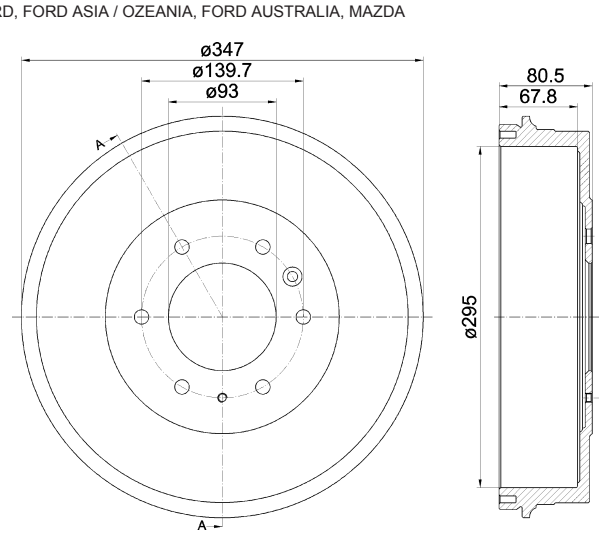

94035500

ASIA MOTORS, FORD ASIA / OZEANIA, FORD AUSTRALIA, KIA, MAZDA

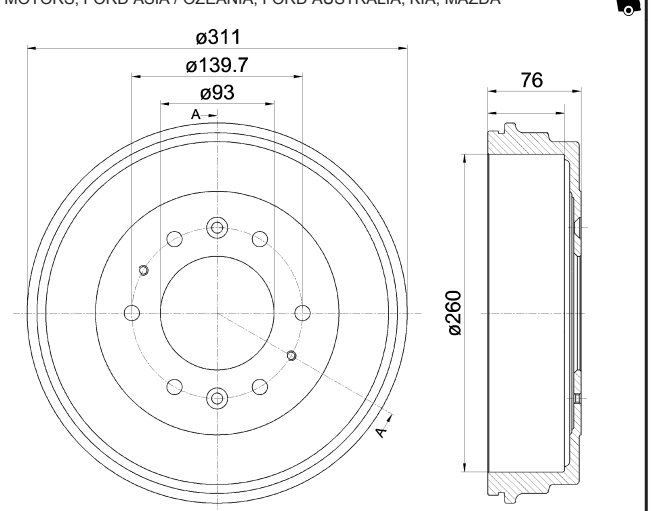

94035600

SMART

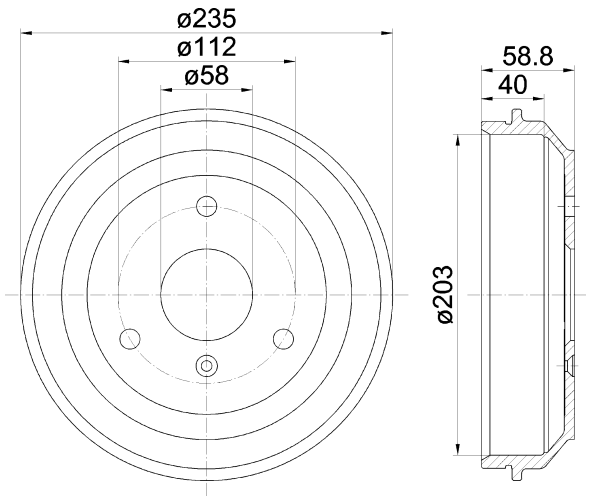

94035700

HYUNDAI

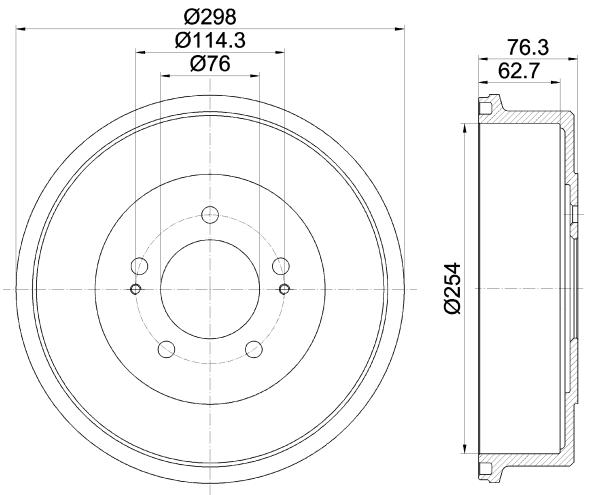

94035800

HYUNDAI

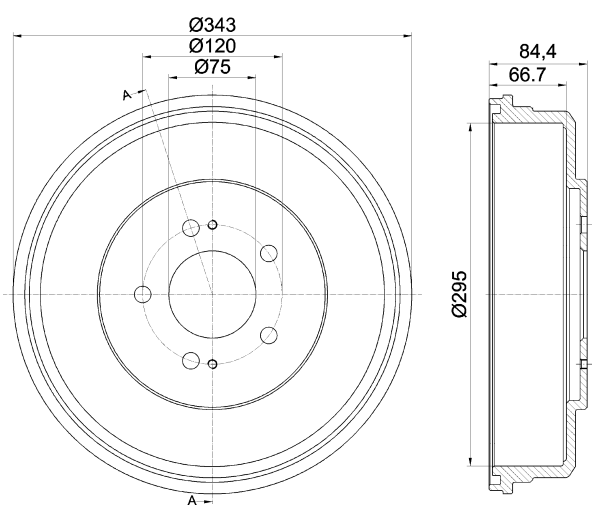

94035900

DODGE, HYUNDAI, KIA

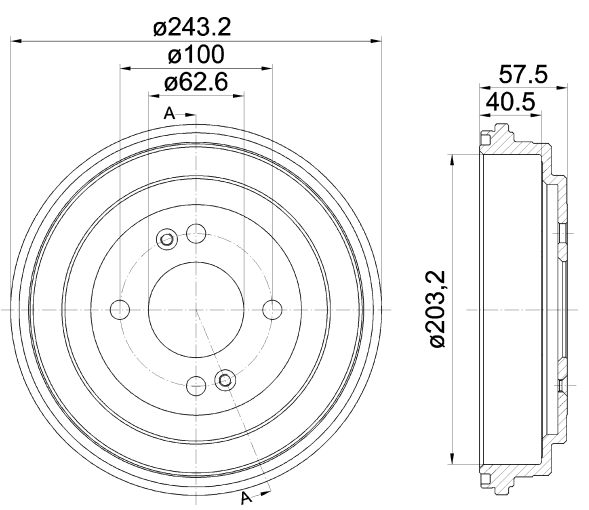

94036000

SUBARU

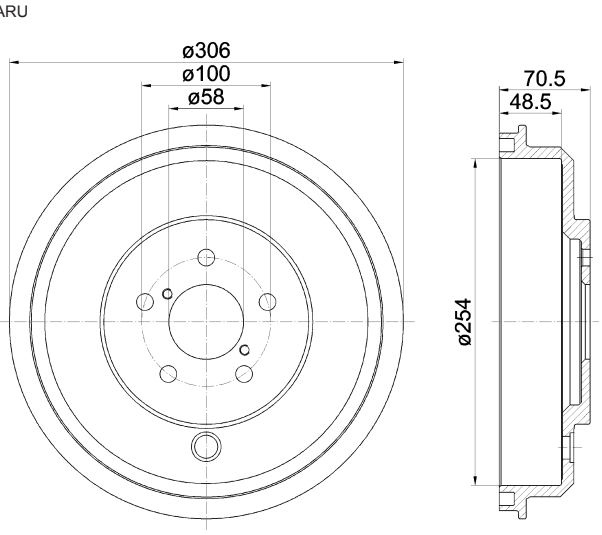

94036100

DAIHATSU, TOYOTA

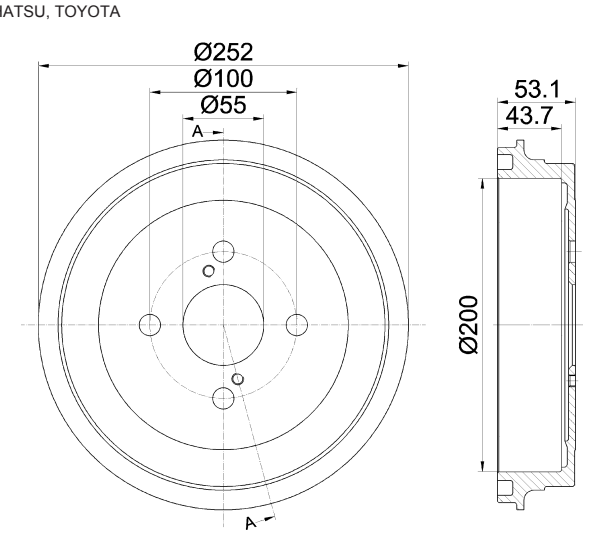

94036200

TOYOTA

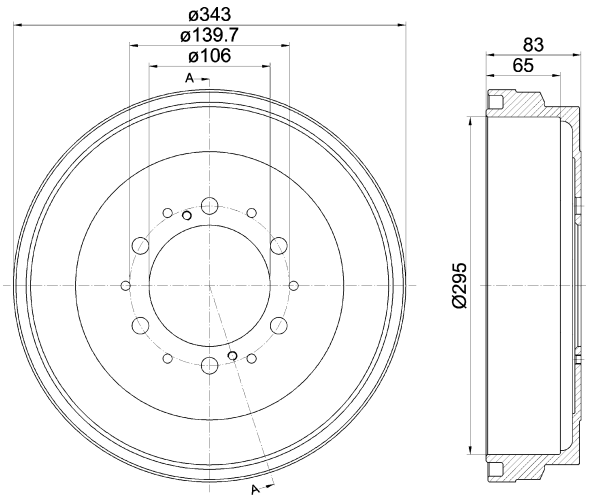

94036300

CHRYSLER, DODGE, JEEP

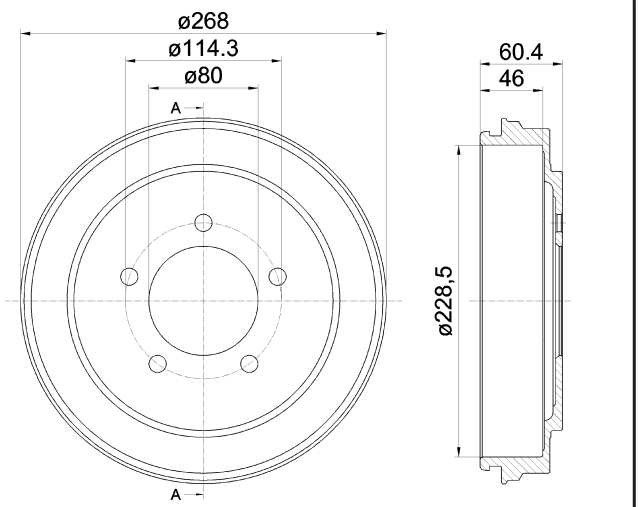

94036400

DAIHATSU, PERODUA, SUBARU, TOYOTA

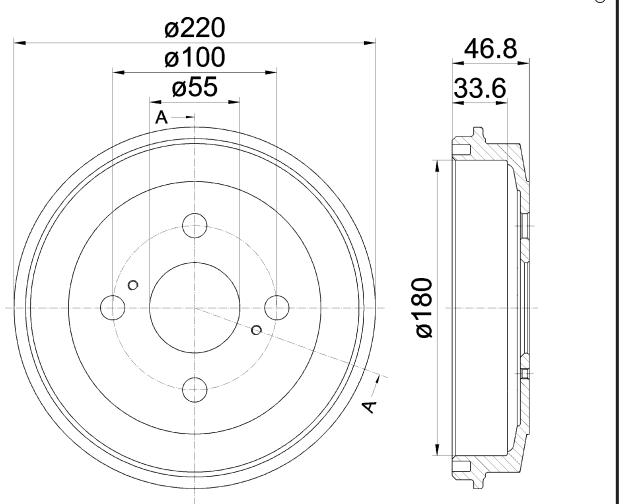

94036500

KIA

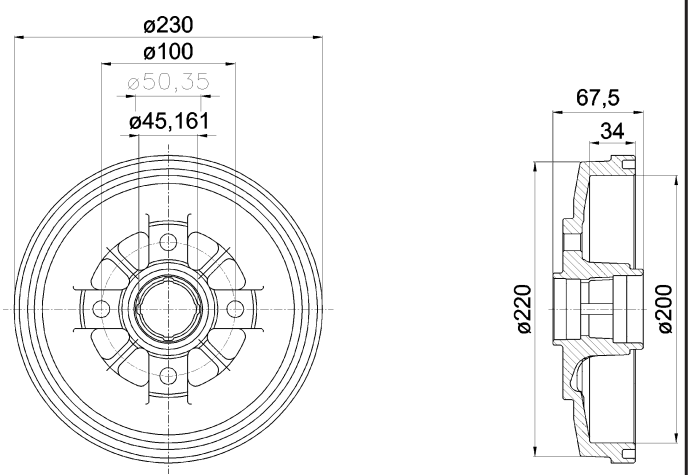

94037000

HONDA

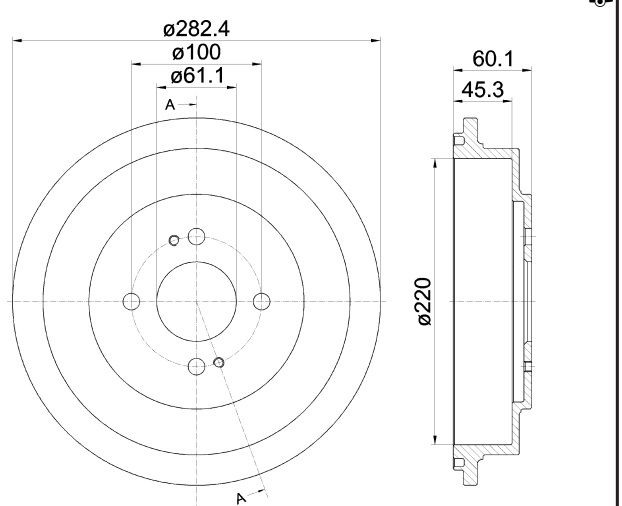

94037100

HONDA

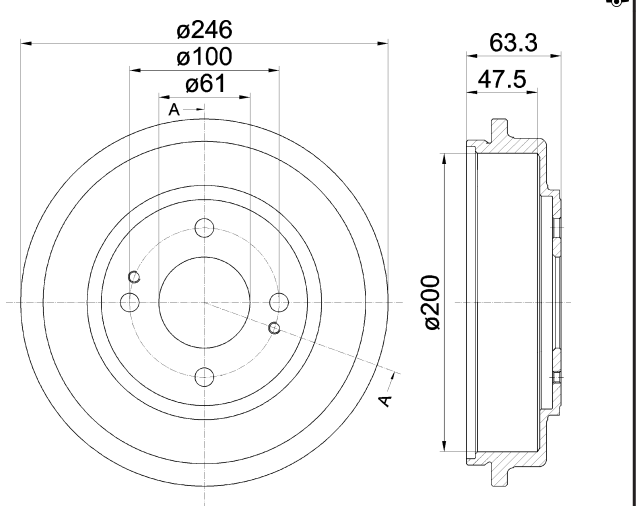

94037200

KIA

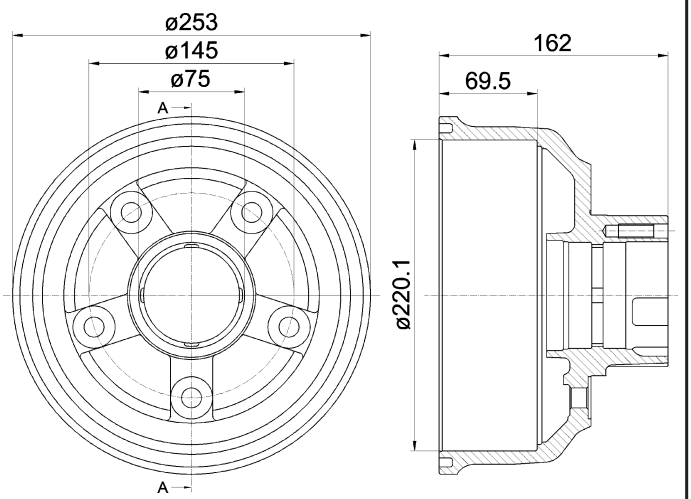

94037300

TOYOTA

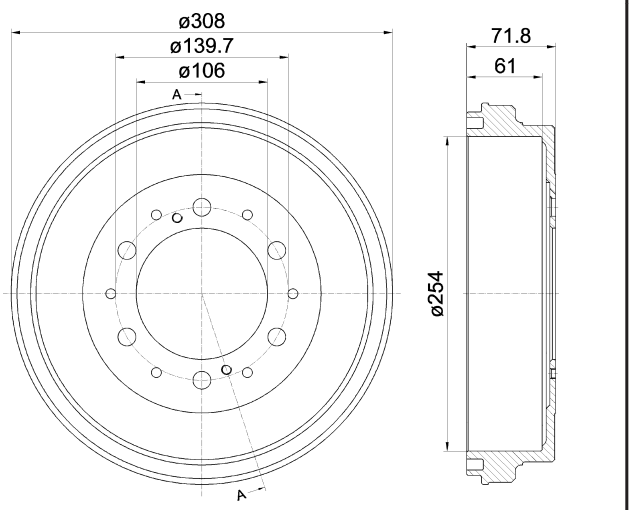

94037400

MITSUBISHI

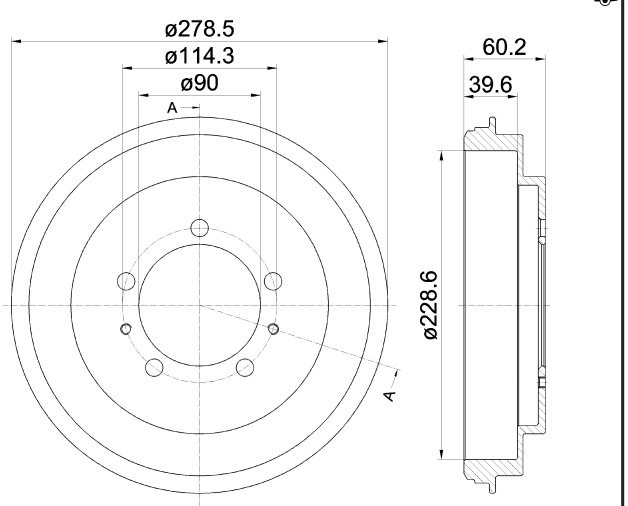

94037500

LAND ROVER

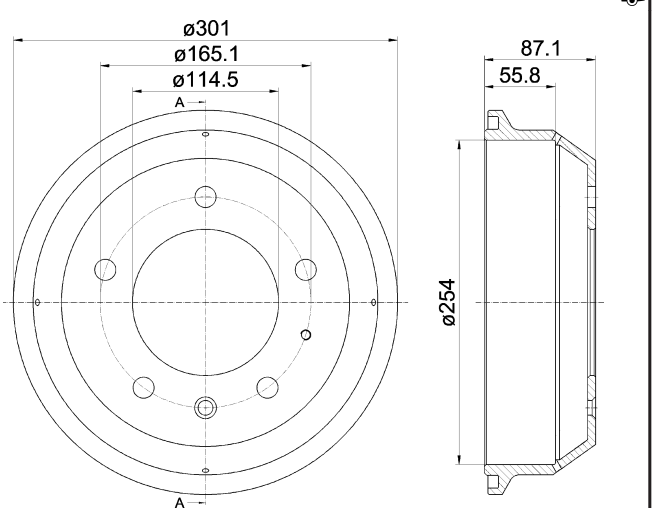

94037600

HYUNDAI

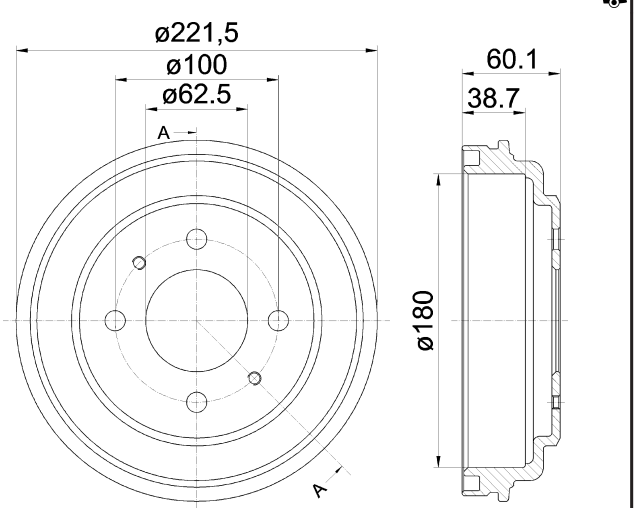

94037700

HYUNDAI

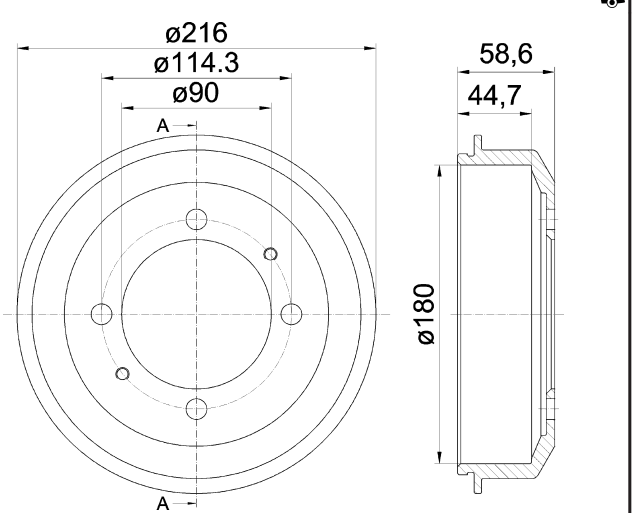

94037800

SUZUKI

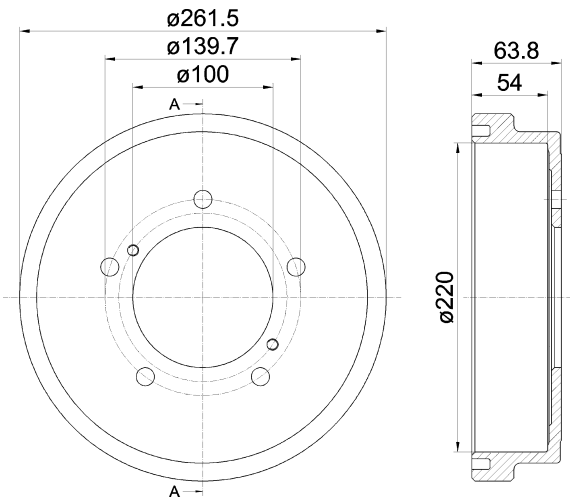

94038300

MAZDA

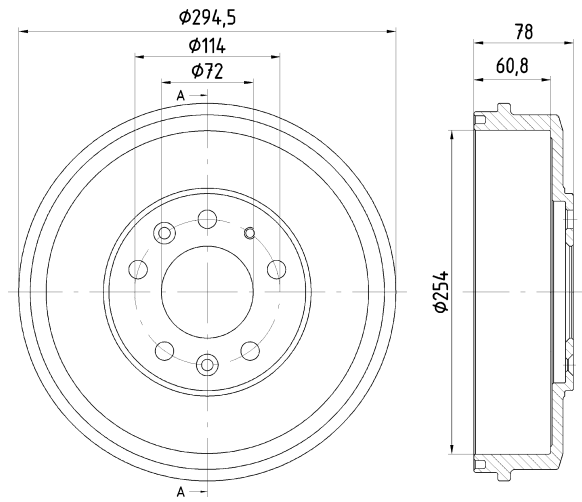

94038400

MAZDA

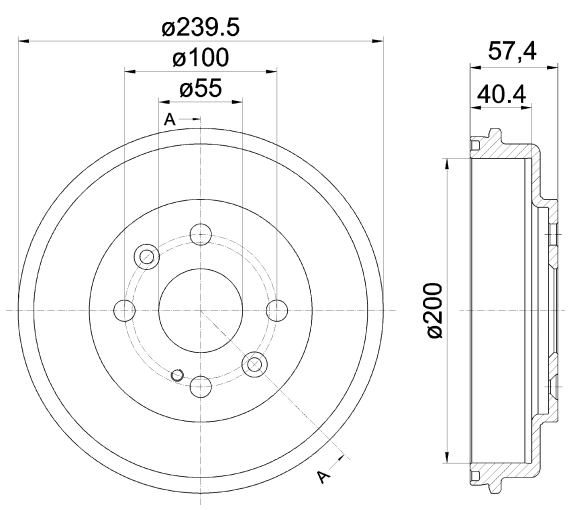

94038500

KIA

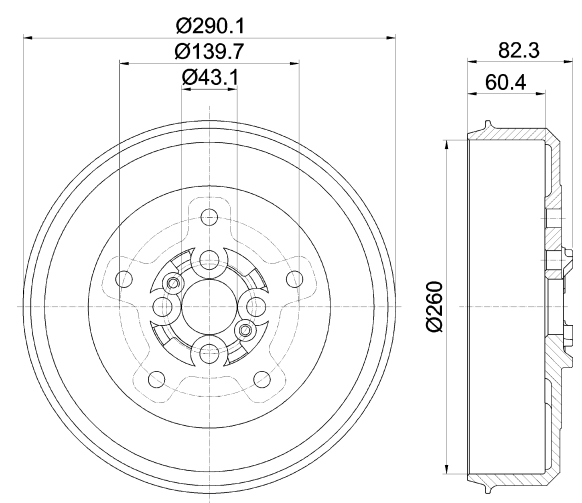

94038600

TOYOTA

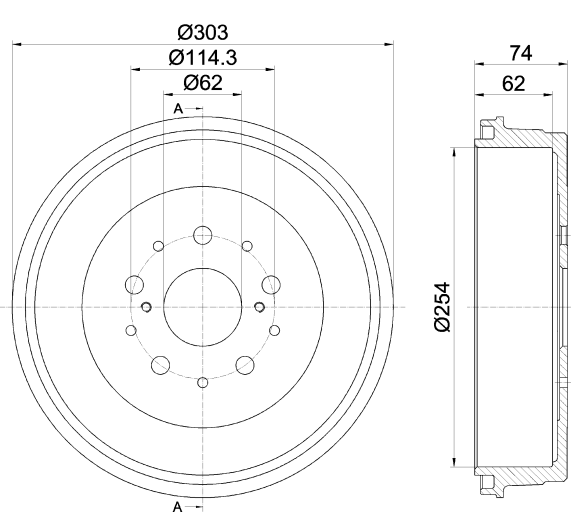

97000500

SEAT, VOLKSWAGEN

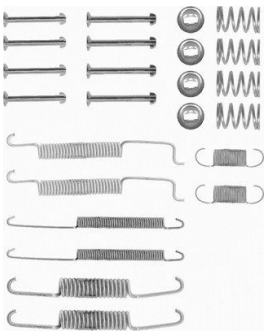

97001200

CHEVROLET, HOLDEN, OPEL, VAUXHALL

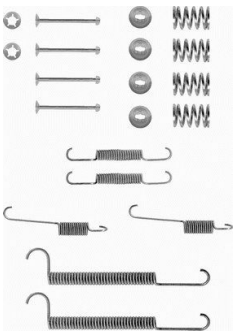

97001300

ROVER

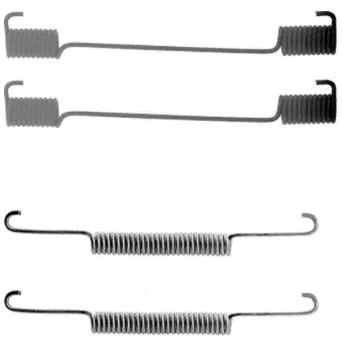

97001500

VOLKSWAGEN

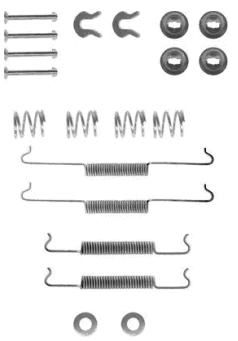

97002500

FIAT, ZASTAVA



97002700

CITROËN, DALLAS, PEUGEOT

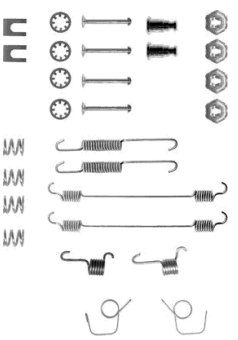

97002800

PEUGEOT, RENAULT

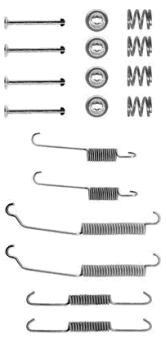

97003100

ALPINA, BMW, BMW (BRILLIANCE)



97003400

NISSAN

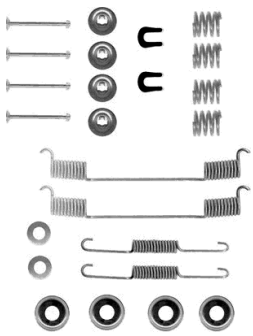

97003600

TOYOTA

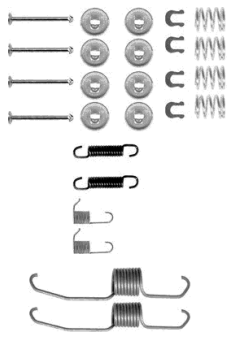

97003700

TOYOTA

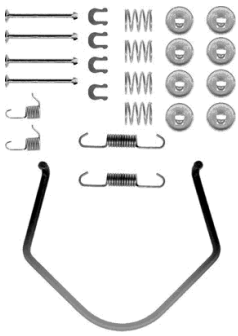

97003800

KIA

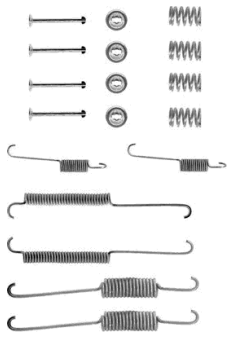

97003900

MORGAN

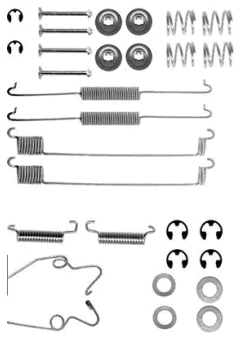

97004000

CARBODIES, LDV, LTI

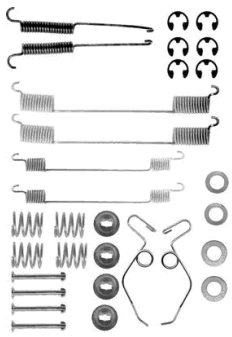

97004600

CITROËN, MEGA, PEUGEOT

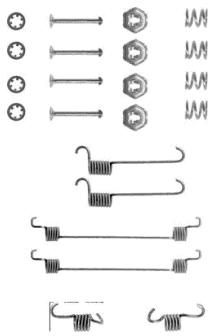

97004700

CITROËN, PEUGEOT

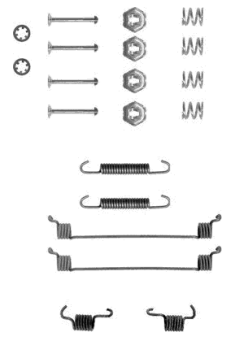

97005100

FIAT

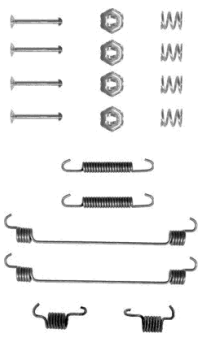

97005200

LADA



97005500

FIAT



97005600

OPEL, VAUXHALL

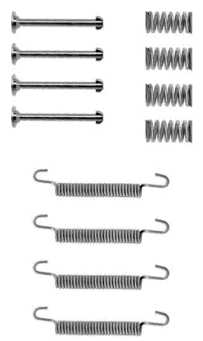

97005800

FIAT, FORD, LANCIA, PEUGEOT



97006400

CITROËN, RENAULT

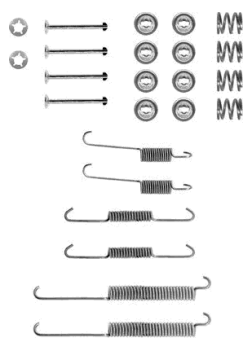

97006500

AUDI, SEAT, SKODA, SKODA (SVW), VOLKSWAGEN

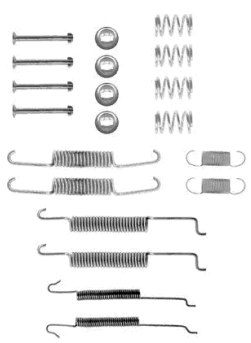

97006600

SEAT, VOLKSWAGEN

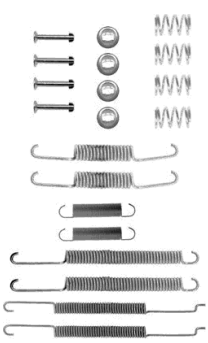

97006700

ALFA ROMEO, FIAT

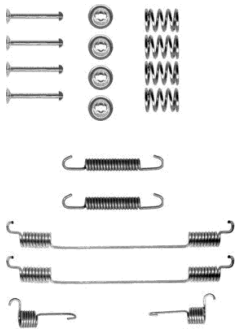

97006800

RENAULT



97006900

RENAULT

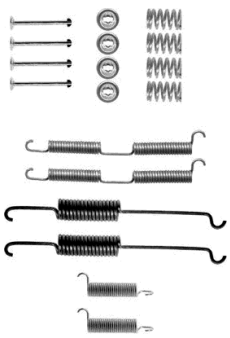

97007000

FORD

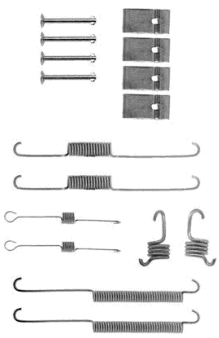

97007200

LDV, NISSAN

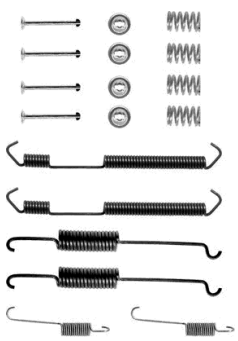

97007300

DAIHATSU

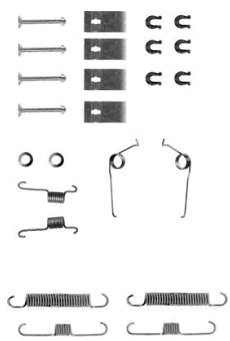

97007400

MITSUBISHI



97007500

FORD ASIA / OZEANIA, KIA

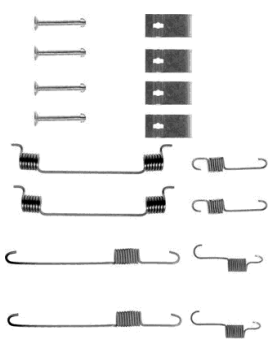

97007600

CITROËN, DALLAS, PEUGEOT

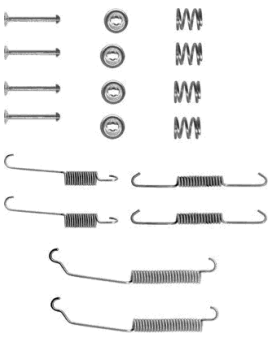

97007800

FORD, FORD AUSTRALIA

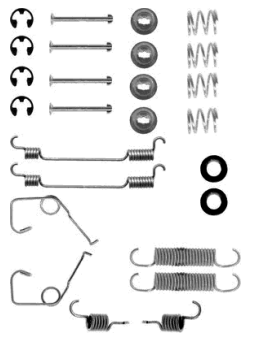

97007900

FORD, FORD AUSTRALIA

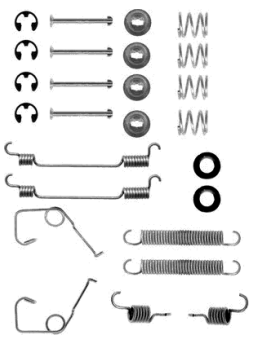

97008000

BMW

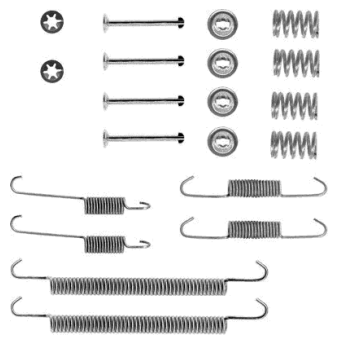

97008100

BMW, WIESMANN



97008200

CHEVROLET, HOLDEN, OPEL, VAUXHALL

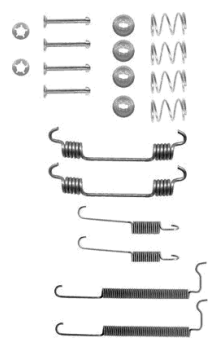

97008300

OPEL, VAUXHALL

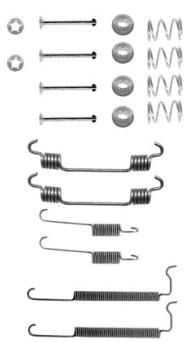

97008400

HOLDEN, OPEL, SAAB, VAUXHALL

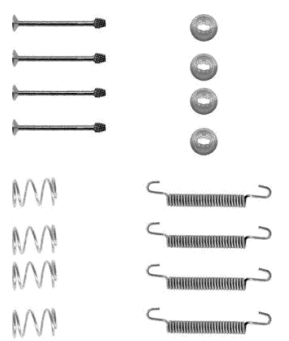

97008500

VOLKSWAGEN

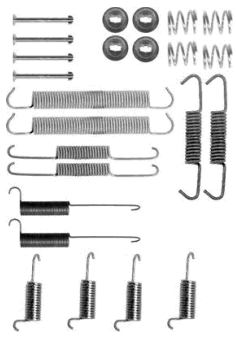

97008600

NISSAN

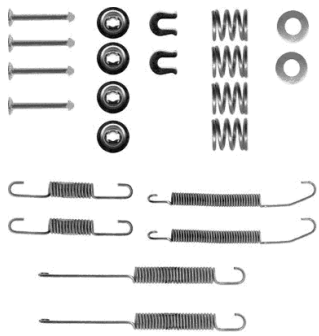

97008700

VOLVO



97009000

MERCEDES-BENZ, SSANGYONG

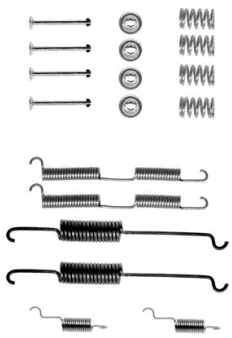

97009100

FORD

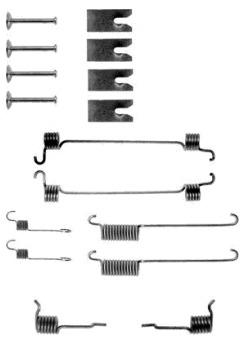

97009200

FORD, FORD AUSTRALIA

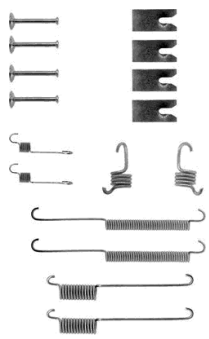

97009500

FIAT, FORD, FORD AUSTRALIA, LANCIA, ZASTAVA

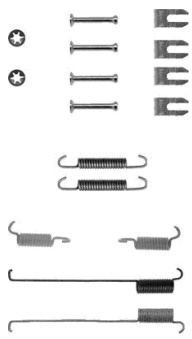

97009600

CITROËN, FIAT, LANCIA, PEUGEOT

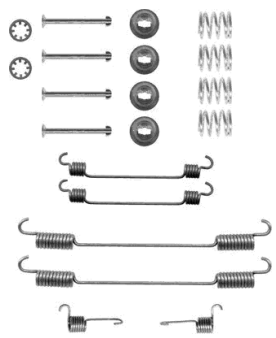

97010000

NISSAN, PEUGEOT, RENAULT

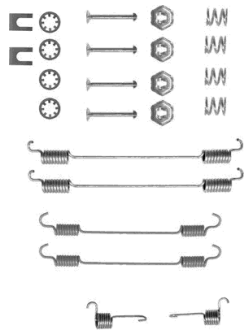

97010100

CITROËN, DACIA, MERCEDES-BENZ, NISSAN, PEUGEOT, RENAULT

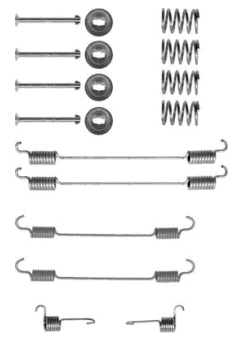

97010200

FORD, FORD AUSTRALIA, MAZDA

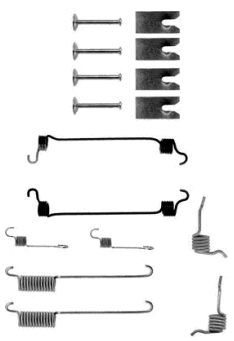

97010300

CITROËN, FIAT, PEUGEOT

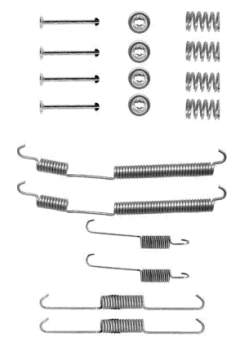

97010400

CITROËN, DACIA, LADA, NISSAN, PEUGEOT, RENAULT

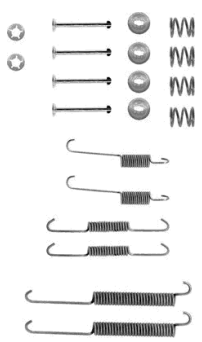

97010600

OPEL, VAUXHALL

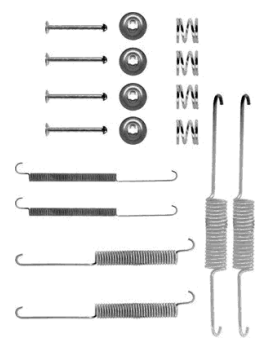

97010800

FIAT

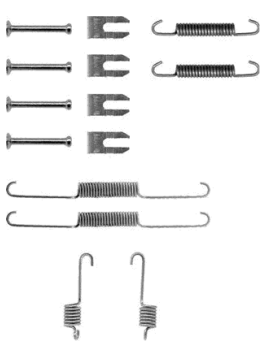

97011000

MAZDA

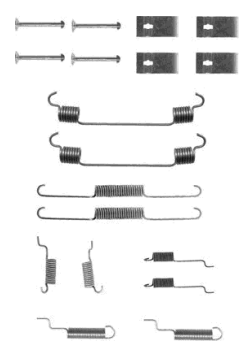

97011100

HYUNDAI

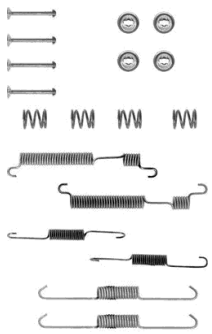

97011200

TOYOTA

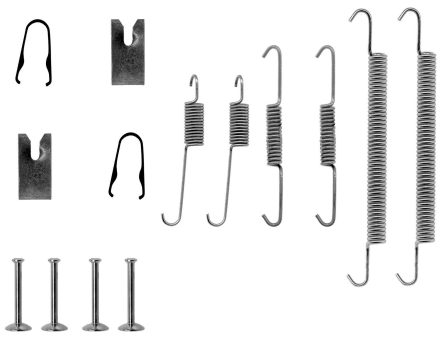

97011300

SEAT, SKODA, VOLKSWAGEN

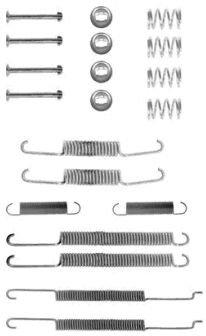

97011600

MERCEDES-BENZ, MERCEDES-BENZ (FJDA)

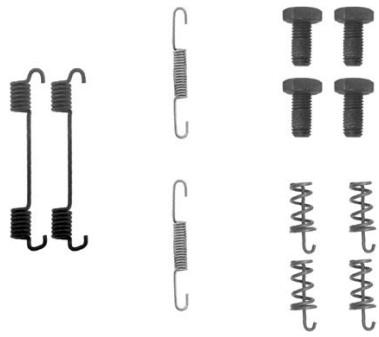

97011700

FIAT, FSO

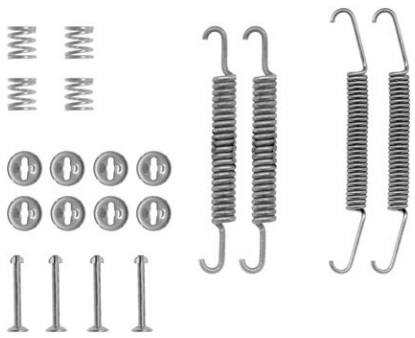

97011800

OPEL, VAUXHALL

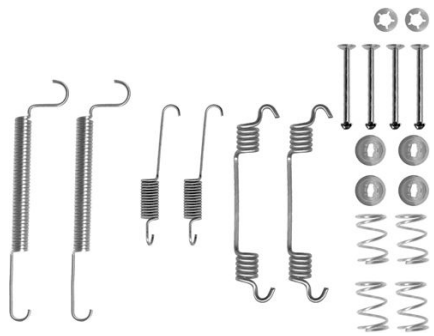

97011900

NISSAN

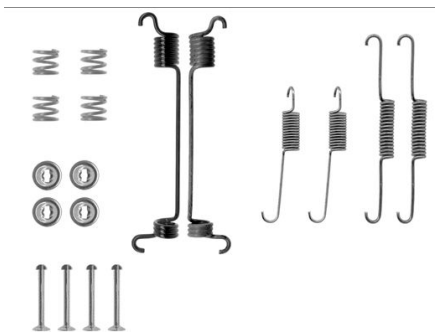

97012000

CITROËN, PEUGEOT, RENAULT

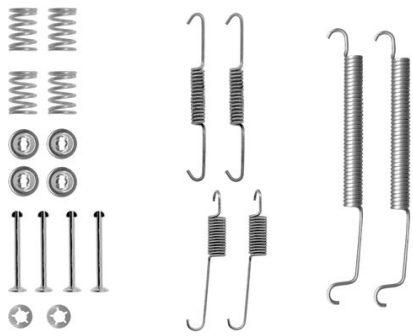

97012100

CITROËN, RENAULT

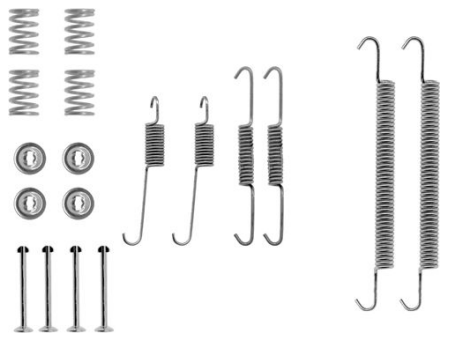

97012200

FORD, FORD AUSTRALIA, NISSAN

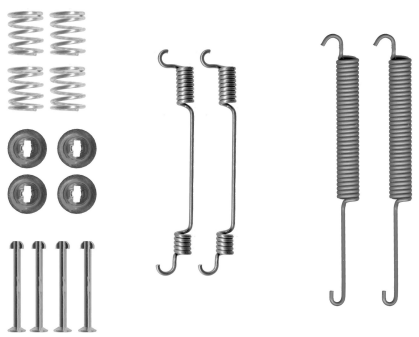

97012300

MERCEDES-BENZ, VOLKSWAGEN

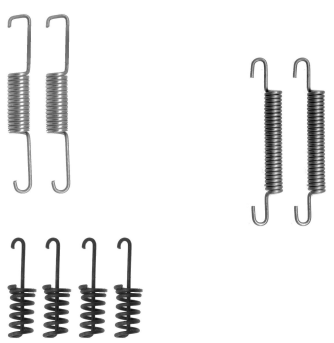

97012400

MERCEDES-BENZ, VOLKSWAGEN

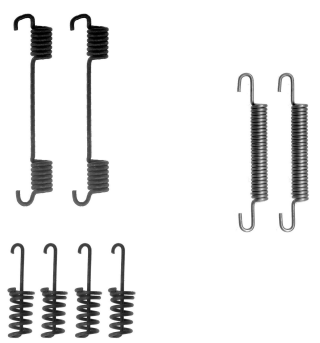

97012500

CITROËN, FIAT, PEUGEOT

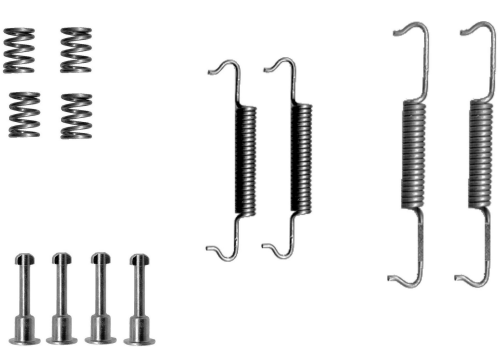

97012600

BMW, BMW (BRILLIANCE)

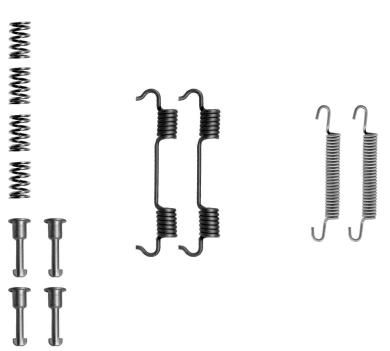

97012700

MITSUBISHI

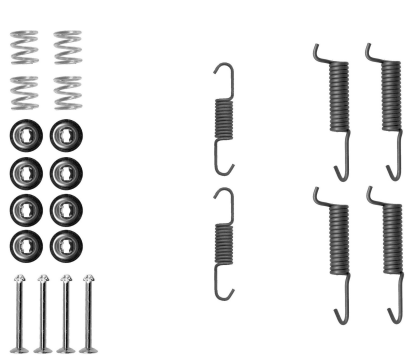

97013400

CHEVROLET, SUZUKI

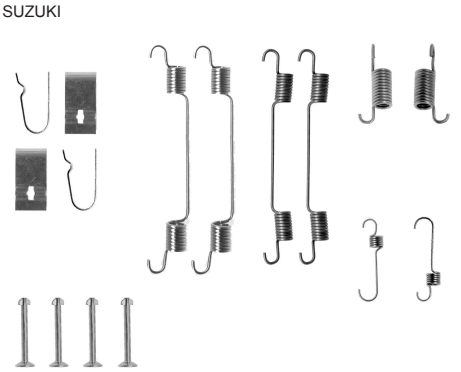

97013500

HONDA, MG, ROVER

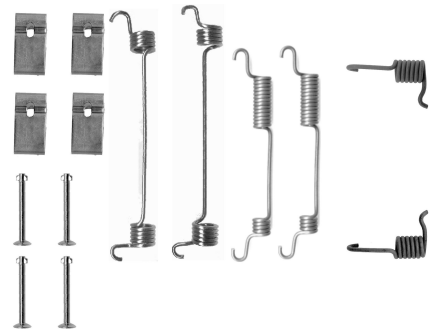

97013600

HONDA, SUZUKI

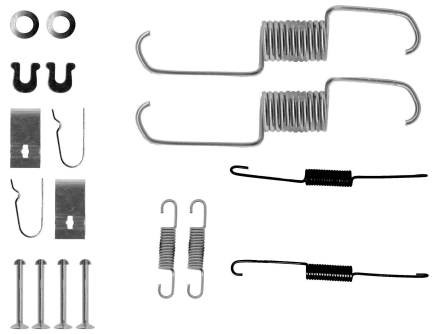

97013800

RENAULT

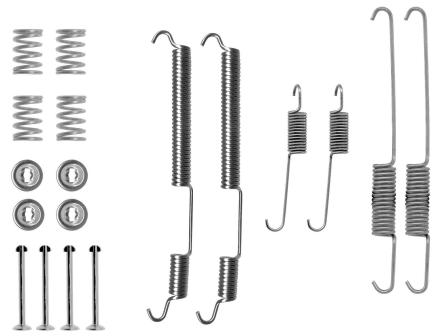

97014000

FORD, FORD AUSTRALIA

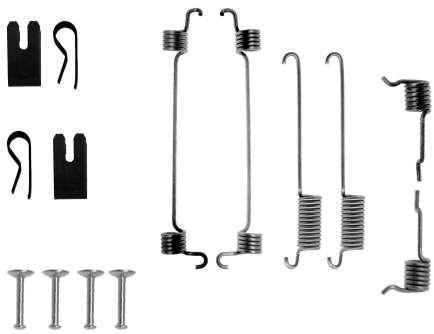

97014100

MERCEDES-BENZ

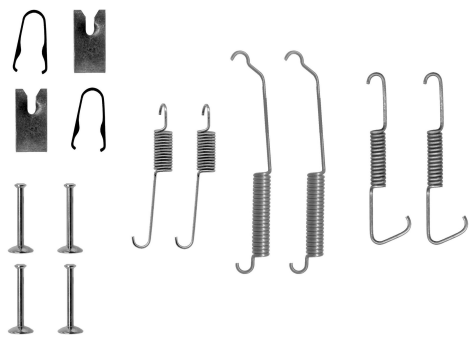

97014200

IVECO

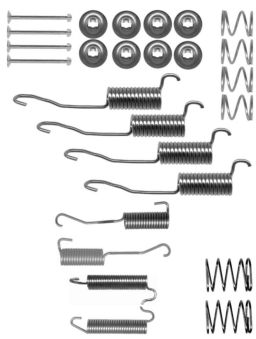

97014300

NISSAN, RENAULT

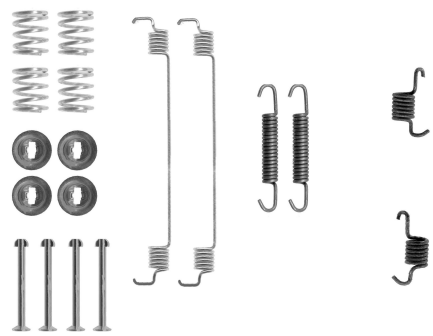

97014400

TOYOTA

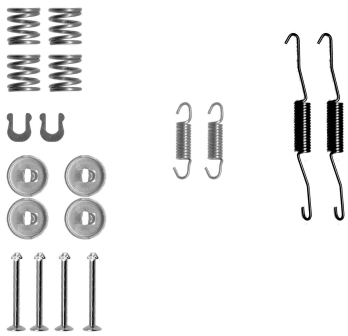

97014600

OPEL, RENAULT, VAUXHALL

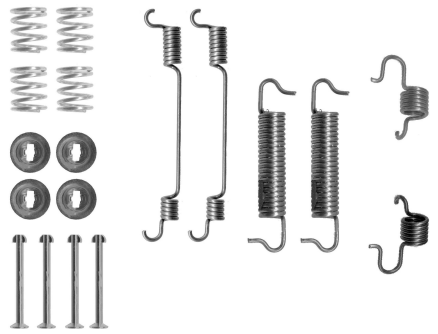

97014700

FIAT

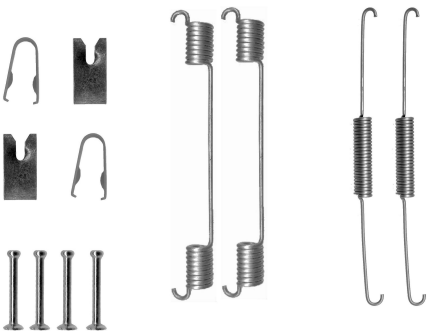

97014800

KIA

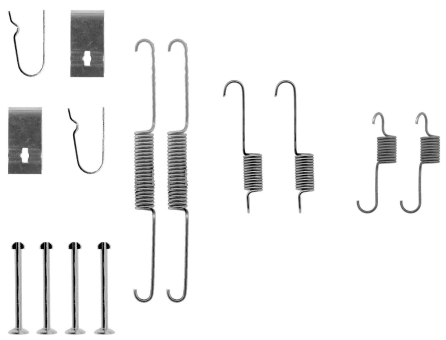

97014900

FIAT, ZASTAVA

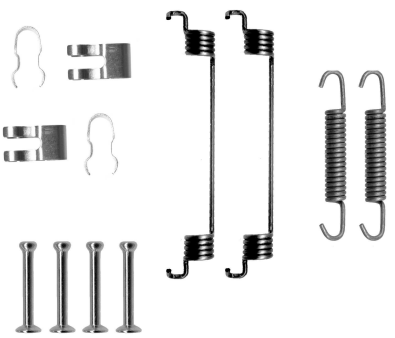

97015100

MITSUBISHI

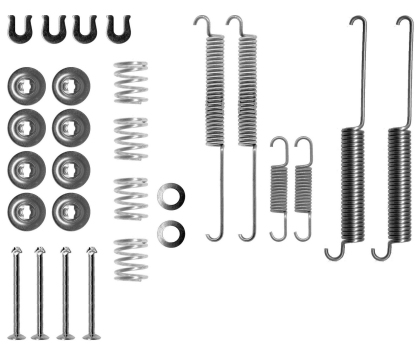

97015200

FIAT, LANCIA

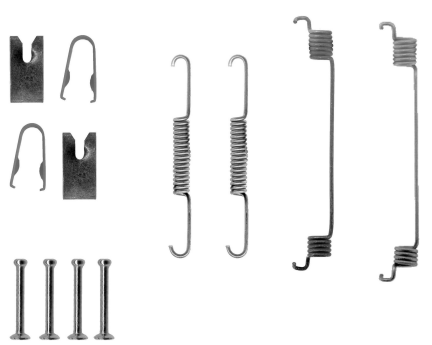

97015400

SMART

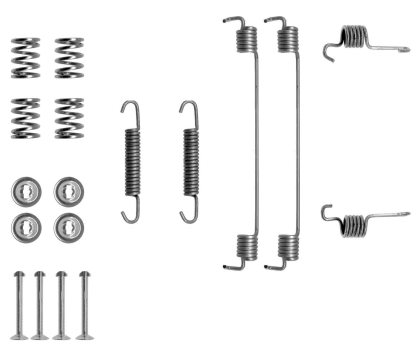

97015500

FORD, FORD AUSTRALIA, MAZDA

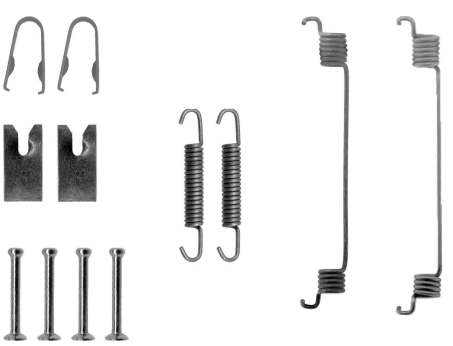

97015600

CHEVROLET, DAEWOO, PONTIAC

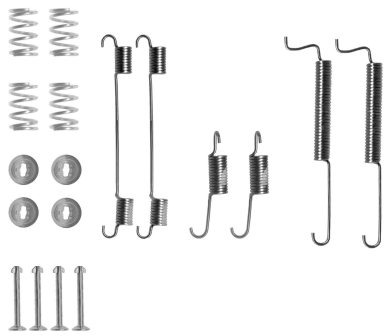

97015700

FIAT

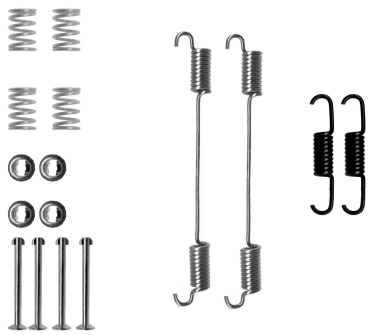

97015800

TOYOTA

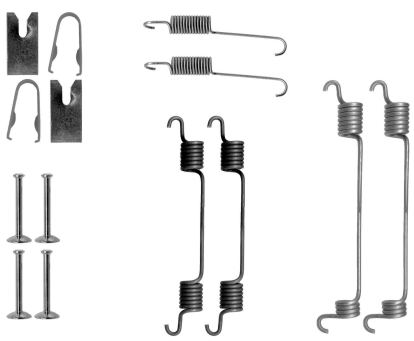

97015900

FORD AUSTRALIA, FORD USA, MAZDA

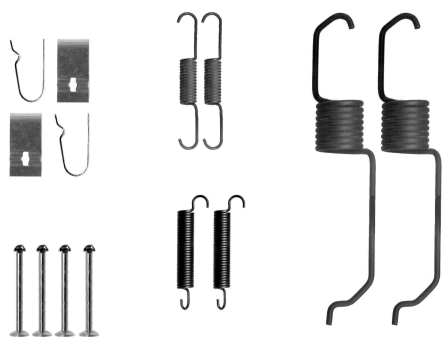

97016000

KIA, MAZDA

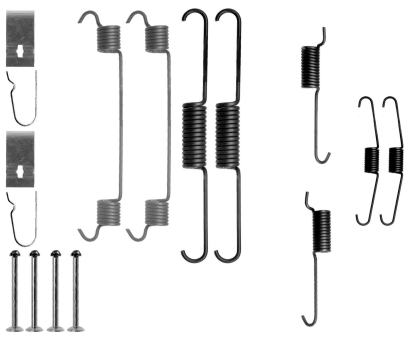

97016200

HONDA

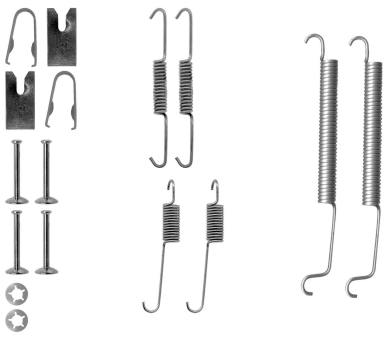

97016400

DAIHATSU, SUZUKI

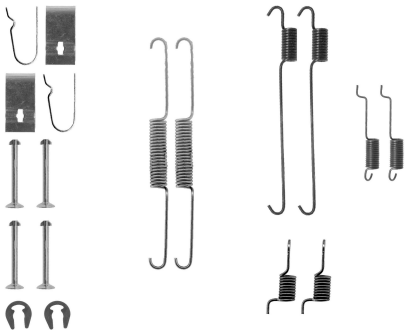

97016500

DODGE, HYUNDAI

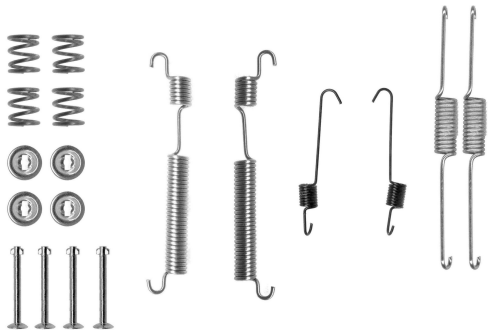

97016600

LAND ROVER

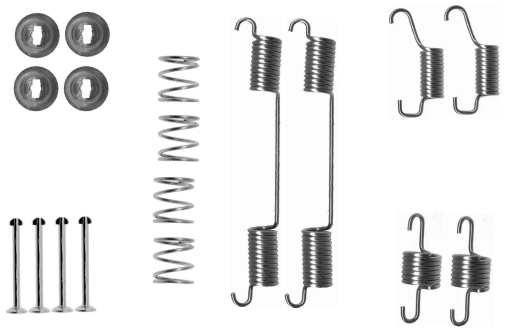

97027800

CITROËN

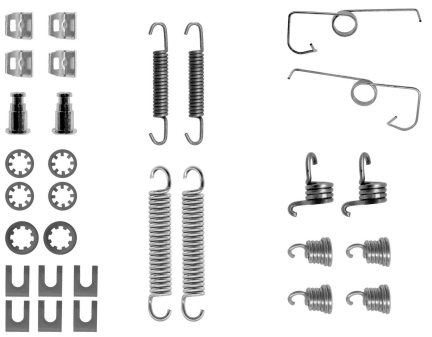

97028000

HONDA

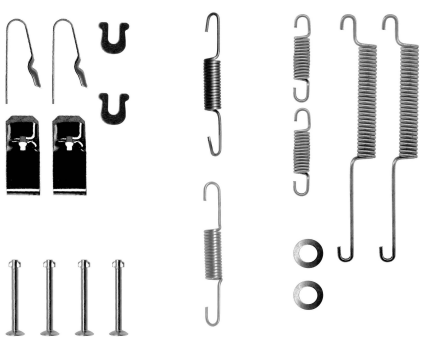

97028900

DAIHATSU, HUALI, TOYOTA, TOYOTA (FAW)

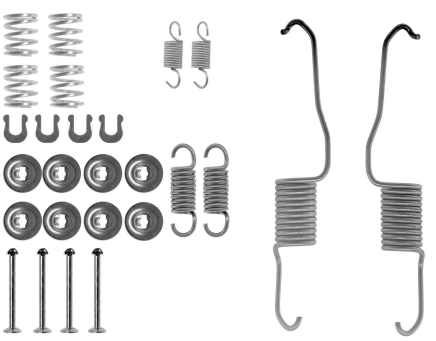

97029000

TOYOTA

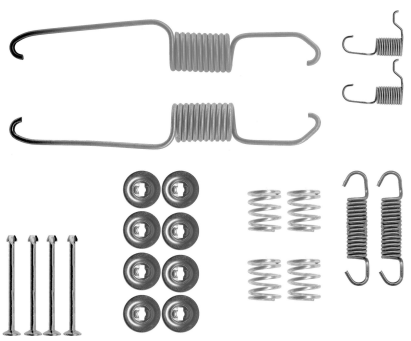

97029100

PEUGEOT



97030100

MAZDA

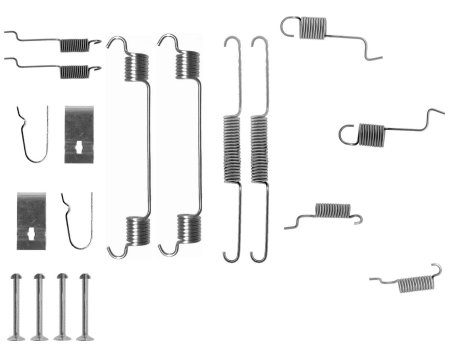

97030400

MITSUBISHI, SUBARU

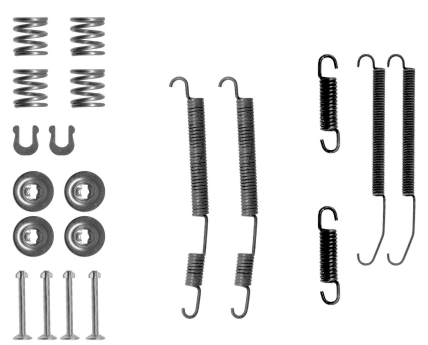

97030600

ROVER

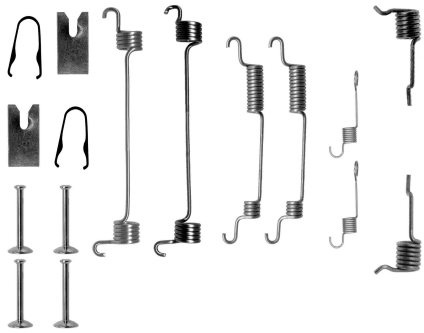

97030800

HYUNDAI, KIA

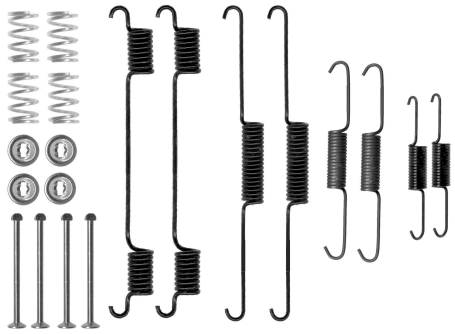

97030900

CITROËN, FIAT, FORD, FORD AUSTRALIA, LANCIA, PEUGEOT

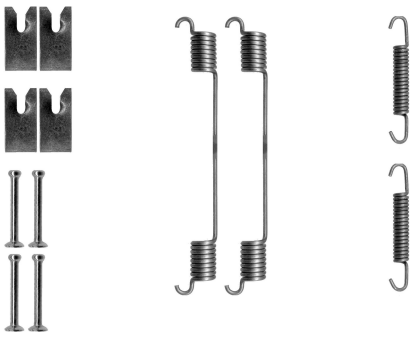

97031000

DACIA, LADA, LANCIA, NISSAN, RENAULT

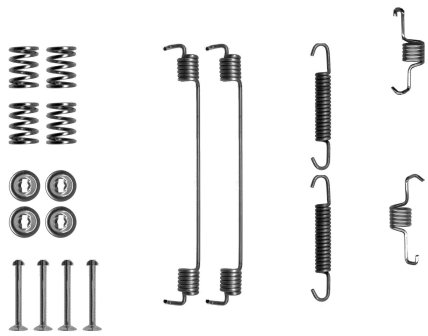

97031100

NISSAN, RENAULT

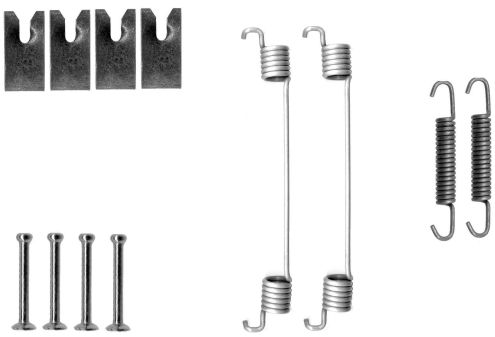

97031200

CITROËN, CITROËN (DF-PSA), PEUGEOT

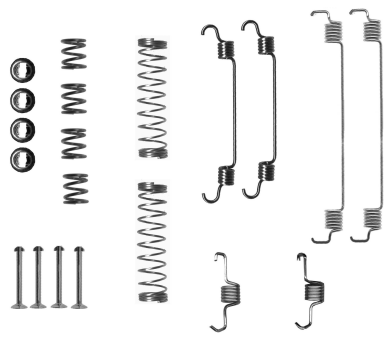

97031300

CITROËN, FIAT, PEUGEOT

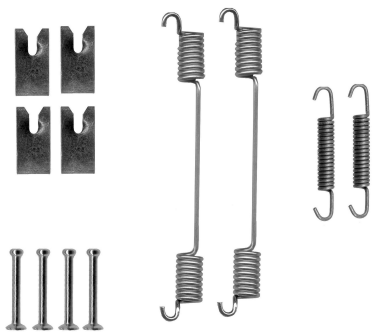

97031400

MITSUBISHI

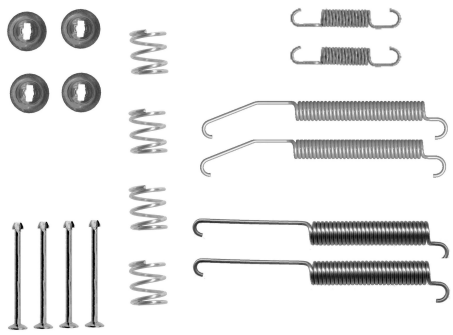

97031500

FIAT, LANCIA, OPEL, VAUXHALL

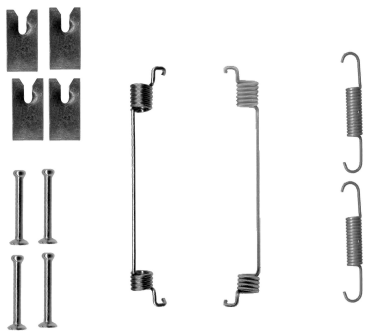

97031600

CITROËN, FIAT, OPEL, PEUGEOT, VAUXHALL

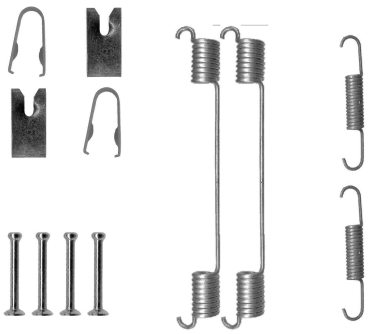

97031700

INOKOM

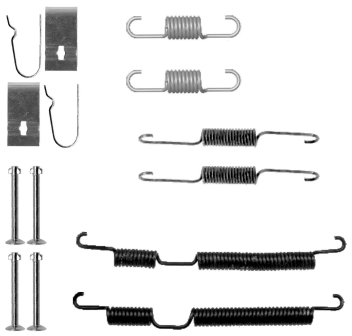

97031800

SMART

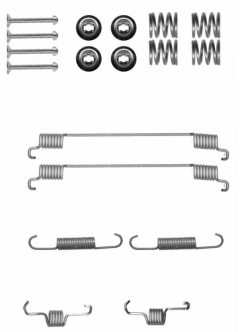

97031900

DACIA, RENAULT, TOYOTA, TOYOTA (FAW)

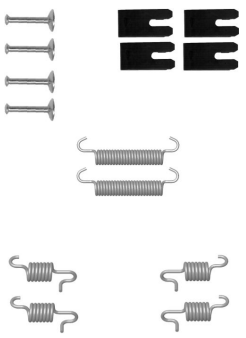

97032000

CITROËN, FIAT, PEUGEOT, SUZUKI, TOYOTA

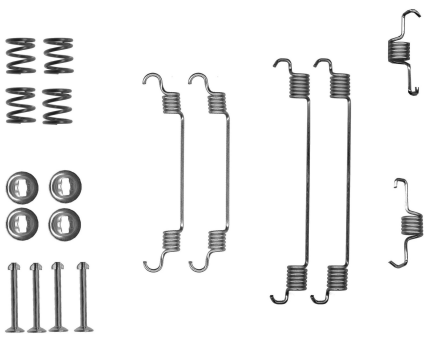

97032100

HYUNDAI

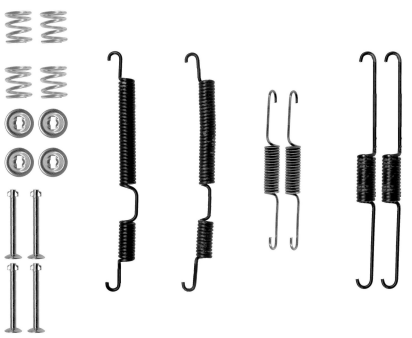

97032200

ALPINA, AUDI, BMW, BMW (BRILLIANCE), MERCEDES-BENZ, PORSCHE, ROLLS-ROYCE, VOLKSWAGEN

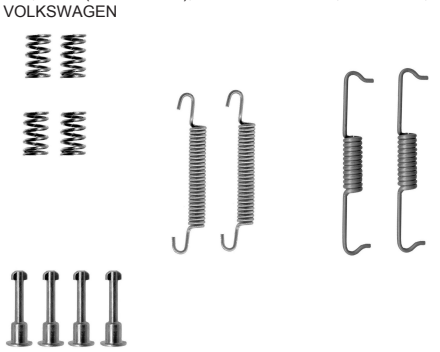

97032300

OPEL, VAUXHALL

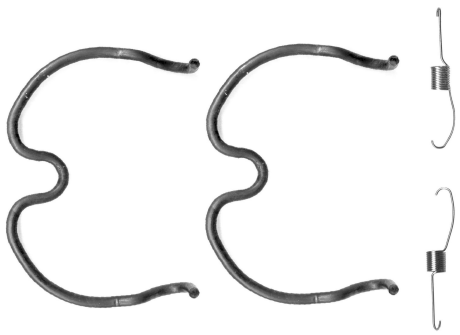

97032400

HONDA

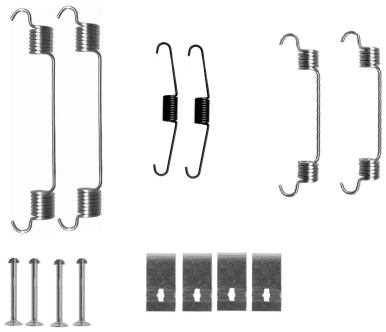

97032500

OPEL, SUBARU, VAUXHALL

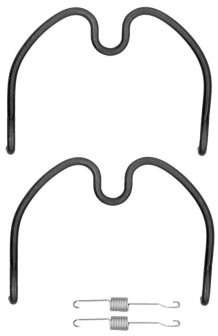

97032600

DAIHATSU, PERODUA

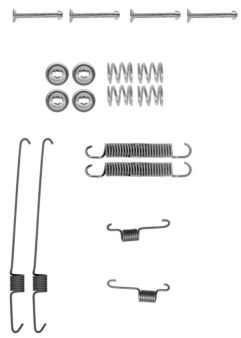

97032700

LAND ROVER

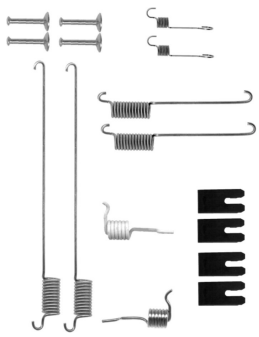

97032800

VOLKSWAGEN

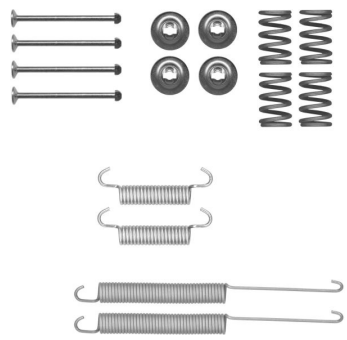

97032900

SUZUKI

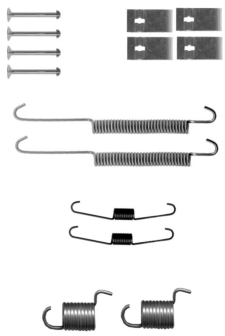

97033000

NISSAN

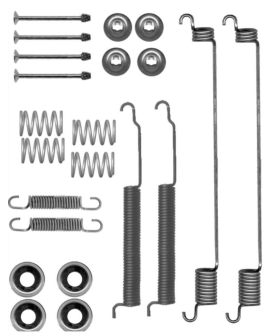

97033200

CHEVROLET, DAEWOO

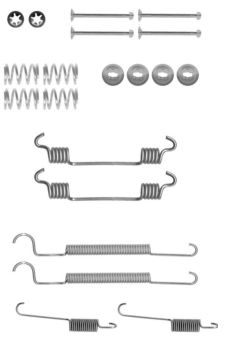

97033300

TOYOTA

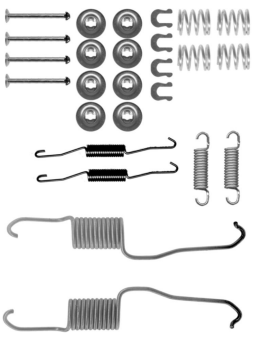

97033500

CITROËN, CITROËN (DF-PSA), PEUGEOT

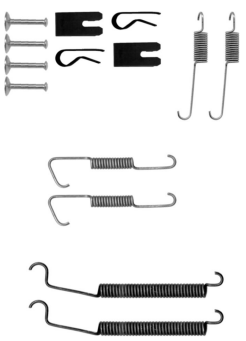

97033600

KIA

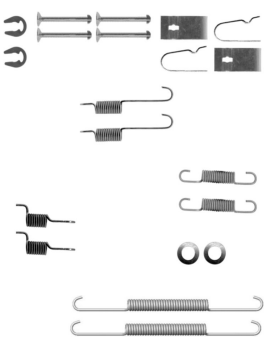

97033700

BUICK, CHEVROLET, CHEVROLET (SGM), DAEWOO, FSO, HOLDEN, ZAZ

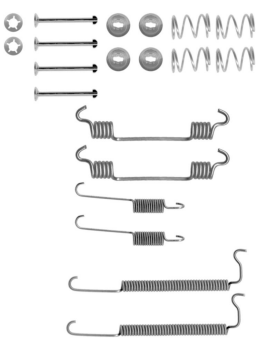

97033900

CHRYSLER, DAIHATSU, DODGE, KIA, PLYMOUTH

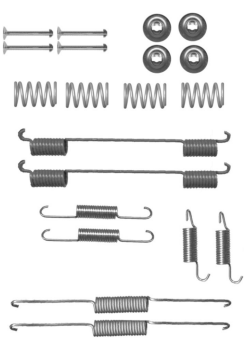

97034000

FIAT, OPEL, VAUXHALL

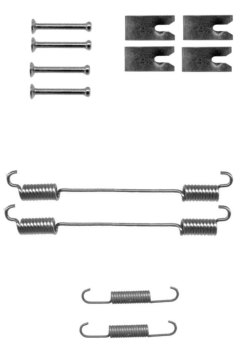

97034200

NISSAN

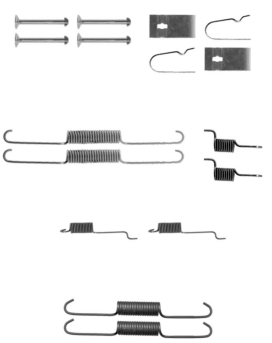

97034300

INOKOM

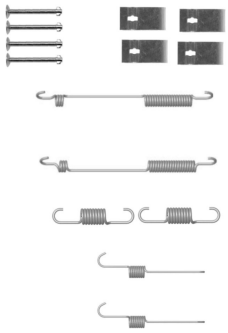

97034500

MERCEDES-BENZ

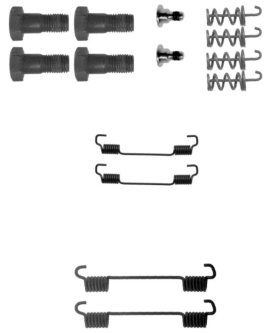

97034600

MERCEDES-BENZ

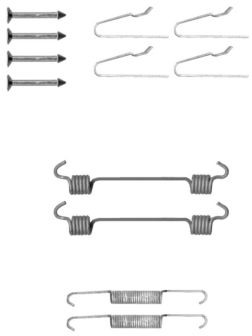

97034700

LEXUS, TOYOTA

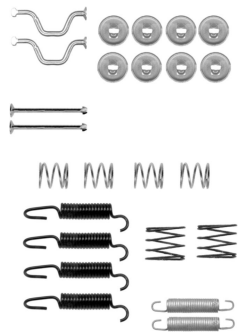

97034800

SUBARU, TOYOTA, VOLVO

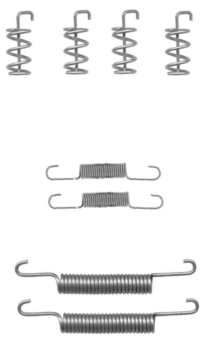

97034900

VOLVO

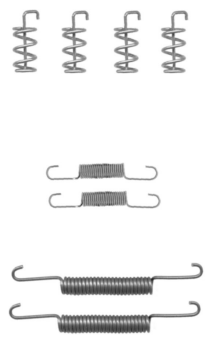

97035000

IVECO, RENAULT TRUCKS

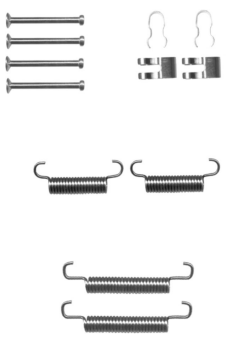

97035200

NISSAN

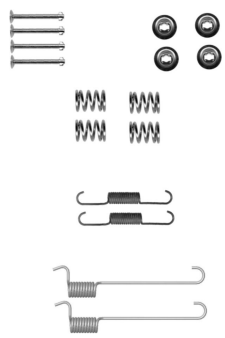

97035300

CITROËN, FIAT, PEUGEOT

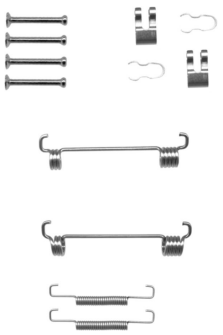

97035400

MERCEDES-BENZ, MERCEDES-BENZ (BBDC)

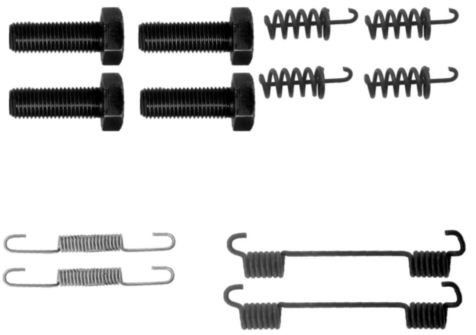

97035500

MERCEDES-BENZ

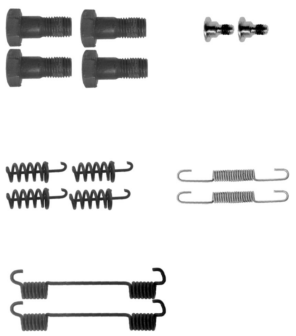

97035600

MERCEDES-BENZ, VOLKSWAGEN

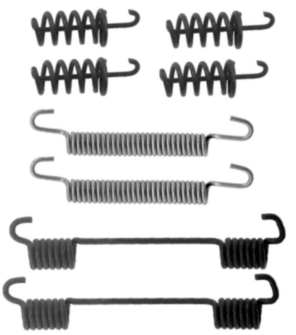

97035700

VOLVO

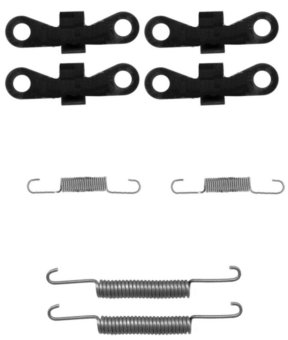

97035800

SUBARU

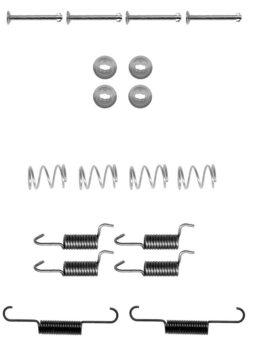

97035900

CITROËN, FIAT, PEUGEOT

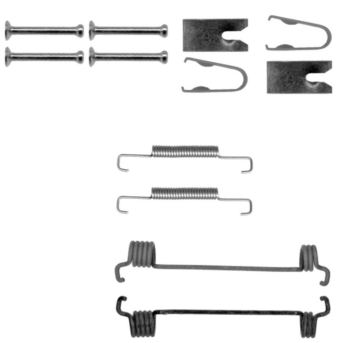

97036000

HONDA

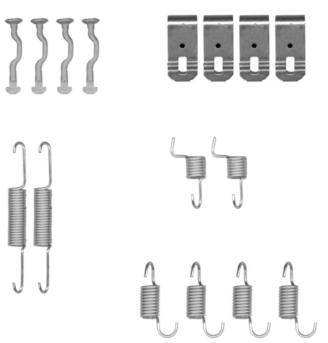

97036100

MG, ROEWE (SAIC), ROVER

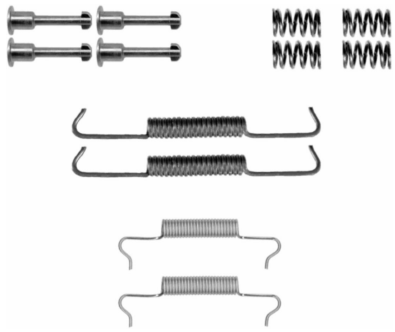

97036200

HYUNDAI, KIA

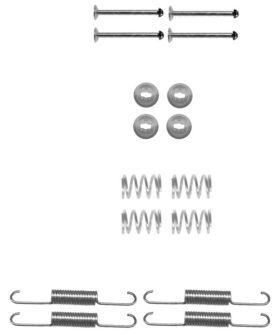

97036300

HYUNDAI

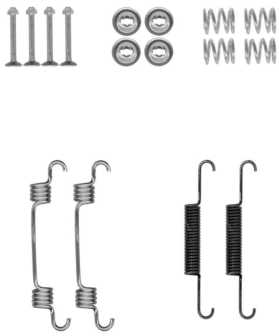

97036400

CHRYSLER

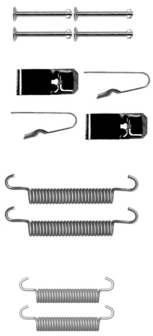

97036500

CHRYSLER

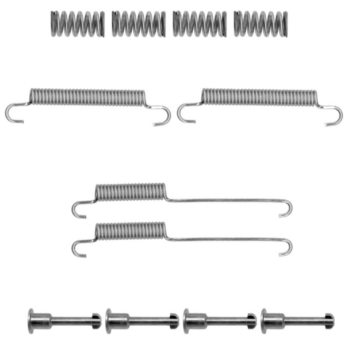

97036600

HYUNDAI, HYUNDAI (BEIJING), KIA

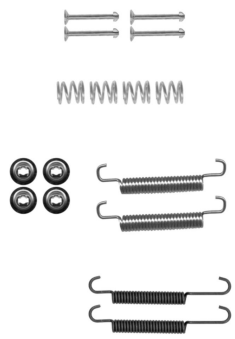

97036700

HONDA

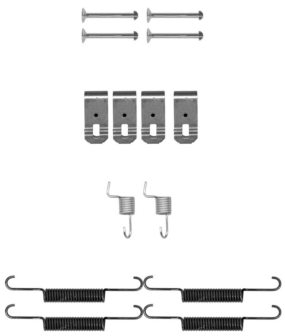

97036800

NISSAN

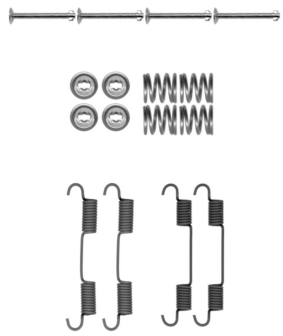

97036900

NISSAN, NISSAN (DONGFENG), RENAULT, RENAULT SAMSUNG

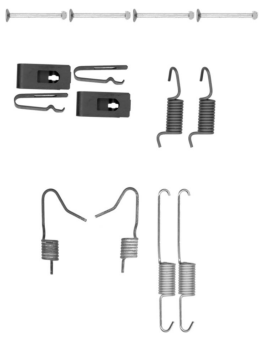

97037100

SUZUKI

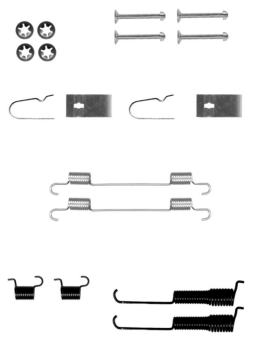

97037200

HONDA

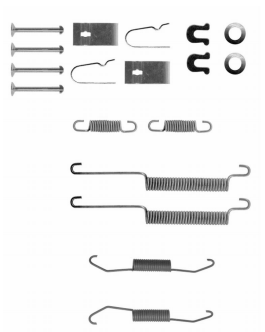

97037400

MITSUBISHI, SMART

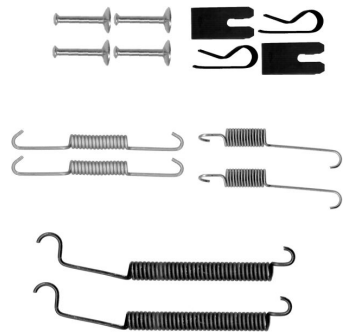

97037500

NISSAN, PORSCHE

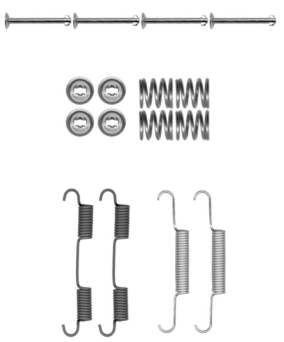

97037600

MAZDA

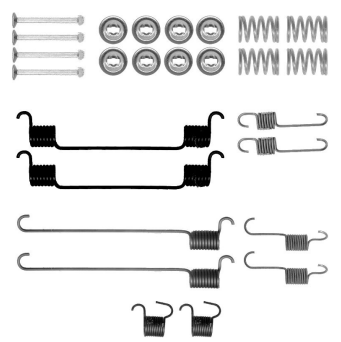

97037700

HYUNDAI

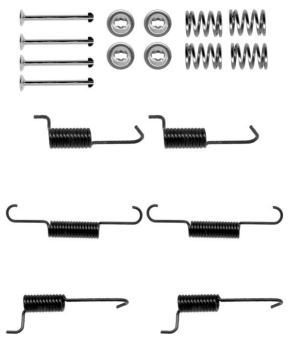

97037800

DODGE, HYUNDAI

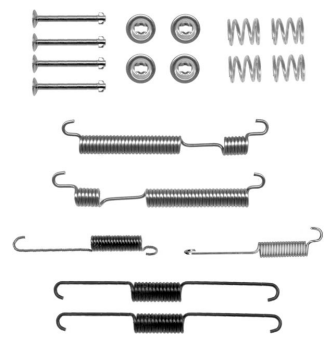

97037900

DACIA, RENAULT

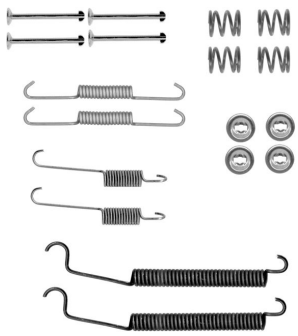

97038100

KIA

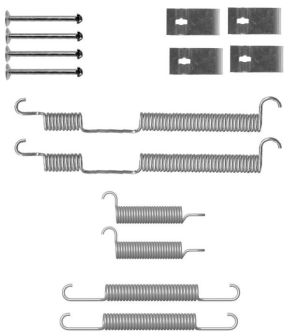

97038200

KIA

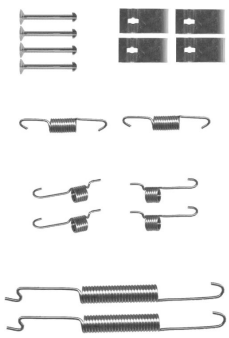

97038300

MERCEDES-BENZ, MERCEDES-BENZ (BBDC)

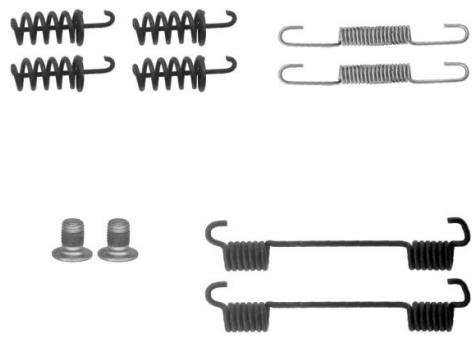

97038400

TOYOTA

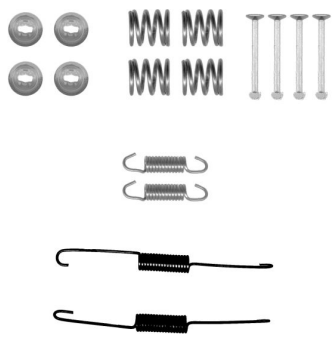

97038500

CHEVROLET, CHEVROLET (SGM), DAEWOO, HOLDEN, OPEL, PONTIAC, VAUXHALL

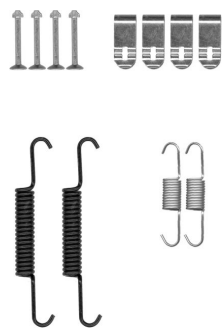

97038600

FORD, FORD AUSTRALIA, MAZDA

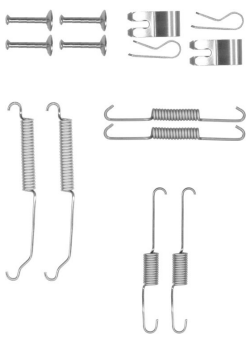

97038700

HONDA

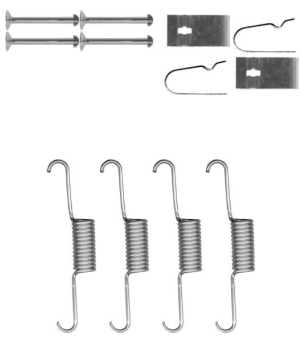

97038800

DODGE, HYUNDAI, KIA

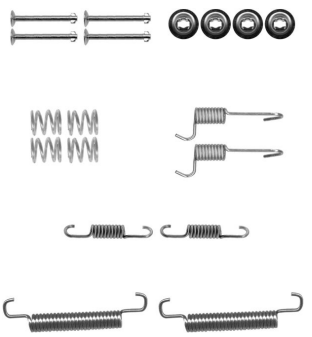

97038900

HYUNDAI, KIA

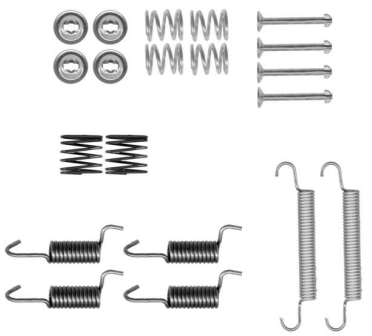

97039500

MERCEDES-BENZ, VOLKSWAGEN

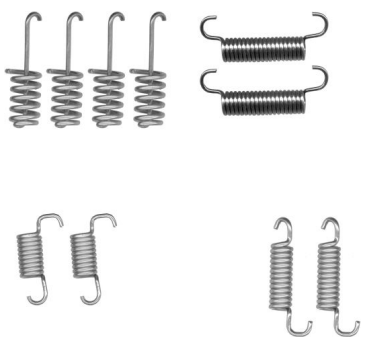

98013300

BMW

776 mm

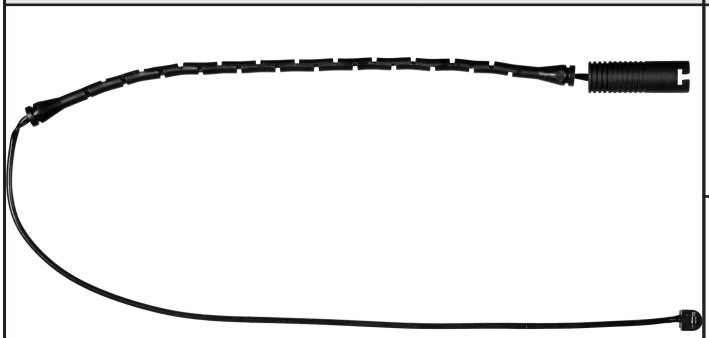

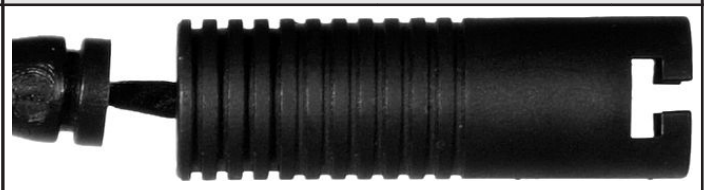



98013400

BMW, WIESMANN

790 mm

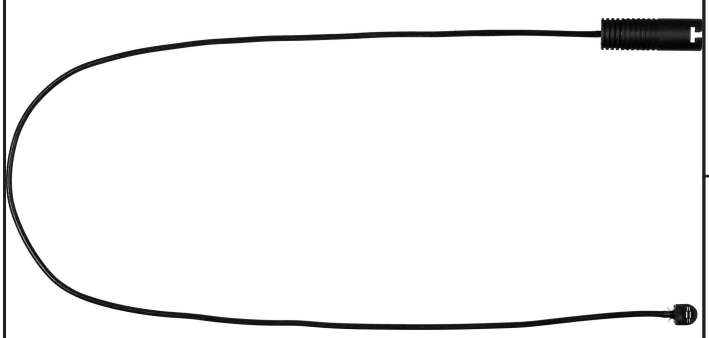

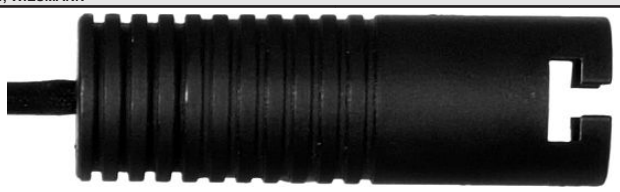

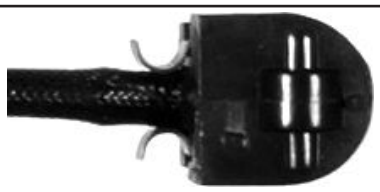

98013500

MERCEDES-BENZ

94 mm



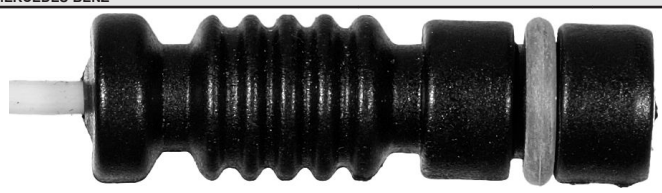



98015800

OPEL, VAUXHALL

685 mm

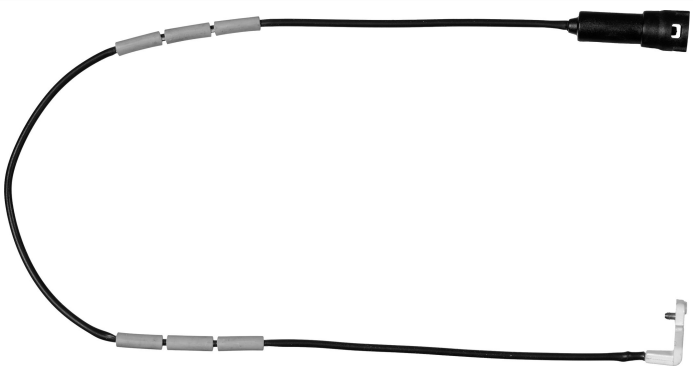



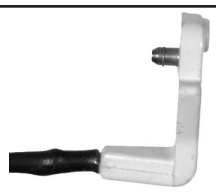

98016000

PEUGEOT

250 mm

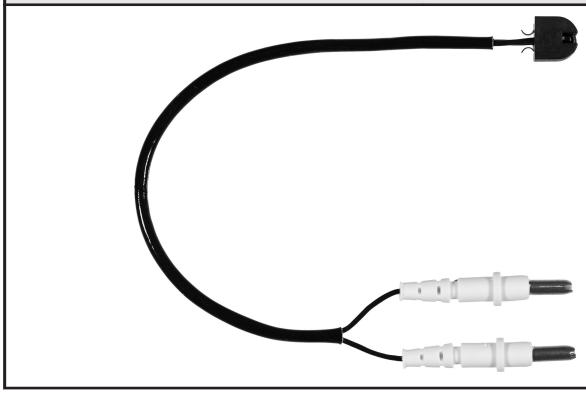

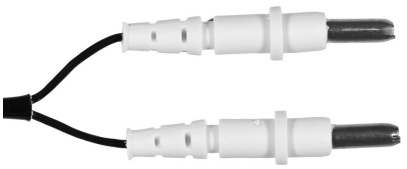

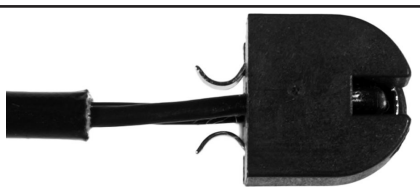

98018200

MERCEDES-BENZ, VOLKSWAGEN

210 mm

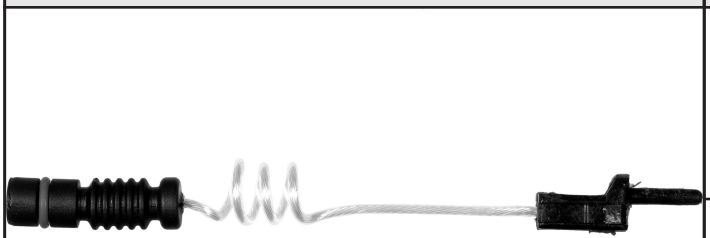

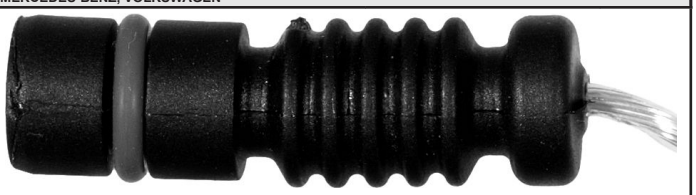

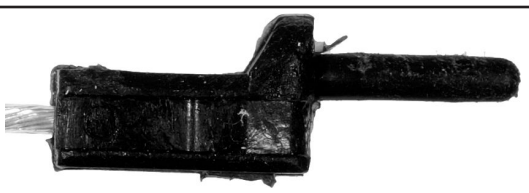

98019000

DAIMLER, JAGUAR

300 mm

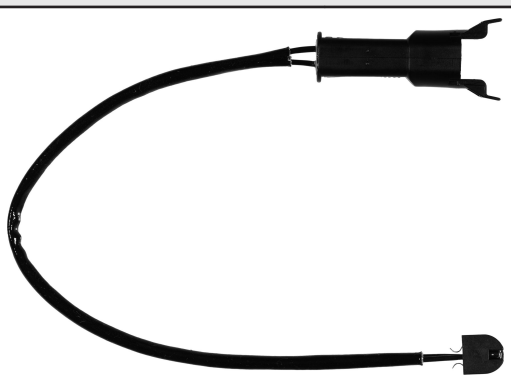



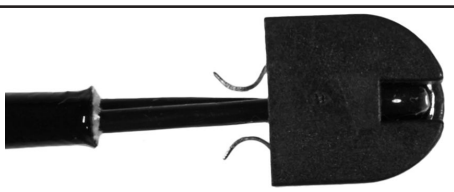

98019100

DAIMLER, JAGUAR

455 mm





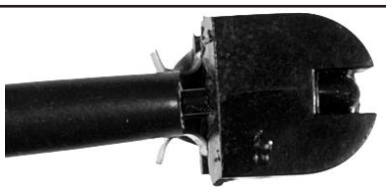

98019300

BMW

260 mm

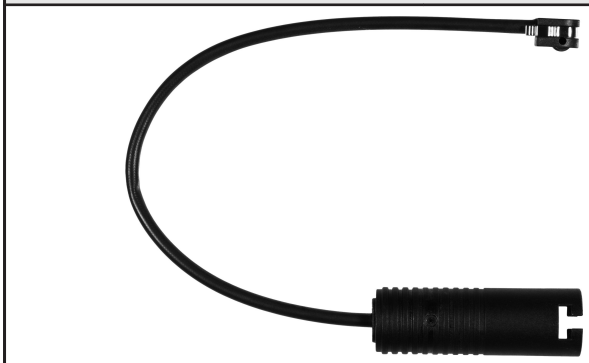

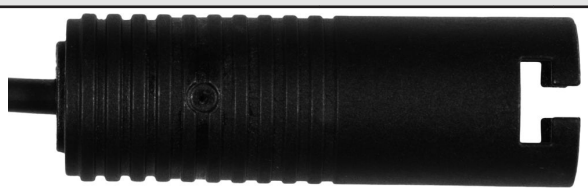

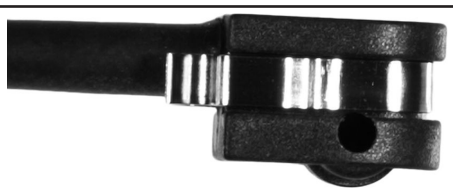

98019400

BMW

370 mm

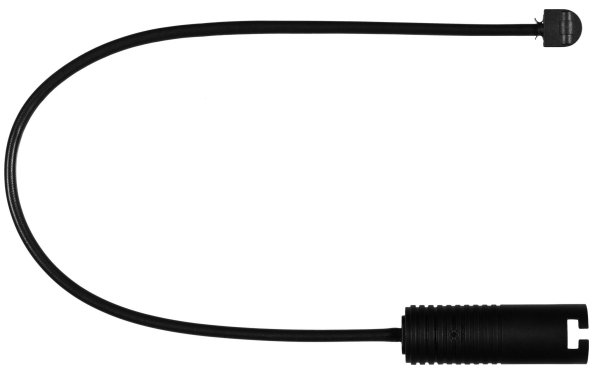



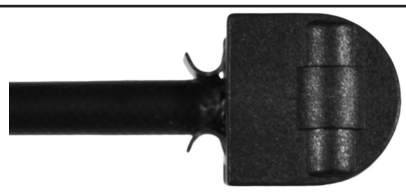

98019500

BMW, WIESMANN

810 mm

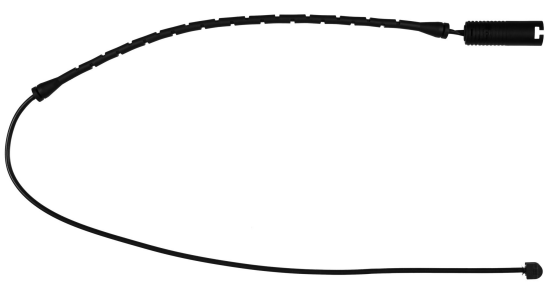





98019800

BMW

570 mm

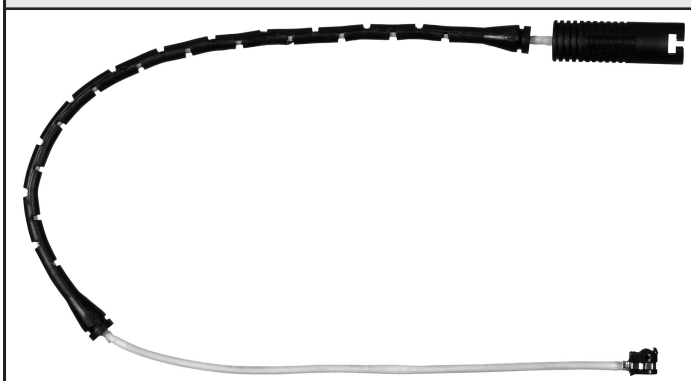

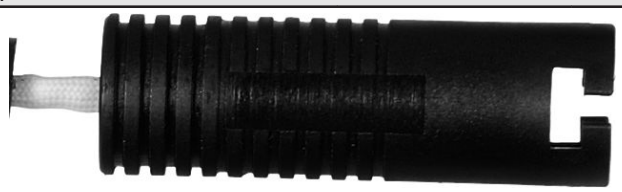



98019900

BMW

620 mm

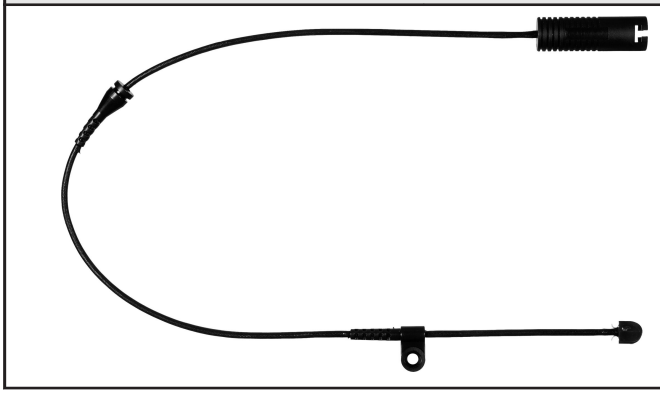

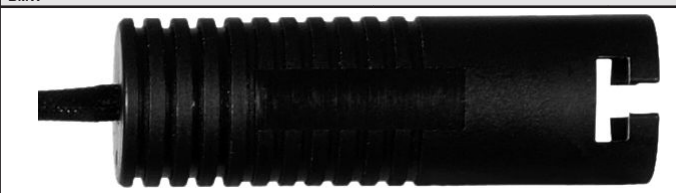

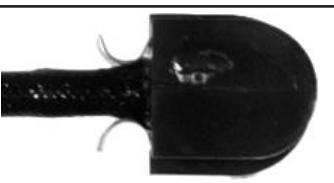

98020000

OPEL, VAUXHALL

730 mm

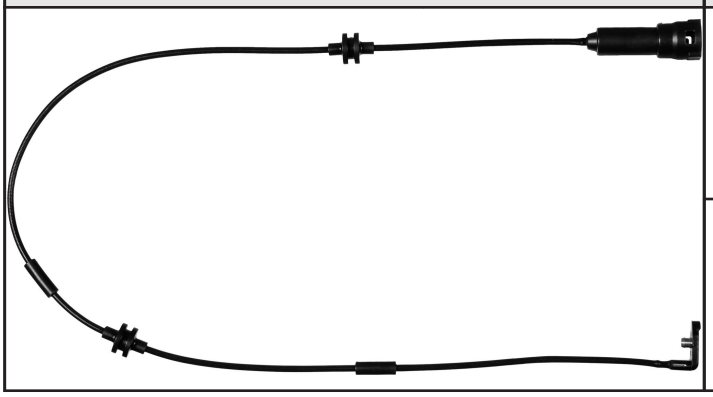





98020100

OPEL, VAUXHALL

735 mm

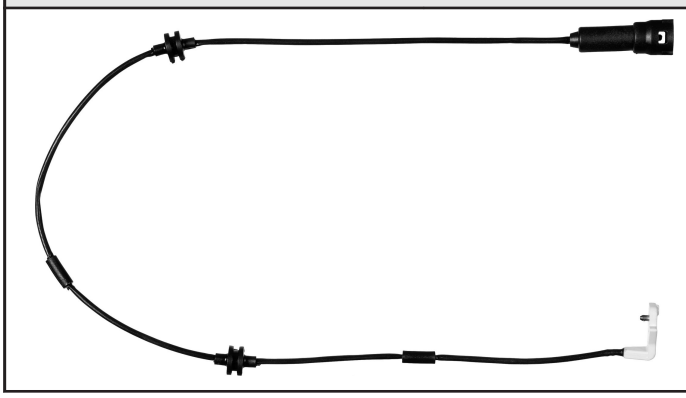





98020500

BMW

580 mm

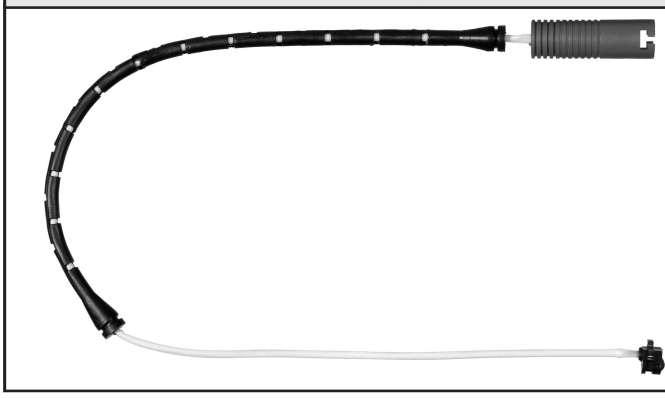



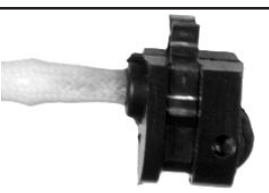

98020600

ALPINA, BMW

840 mm

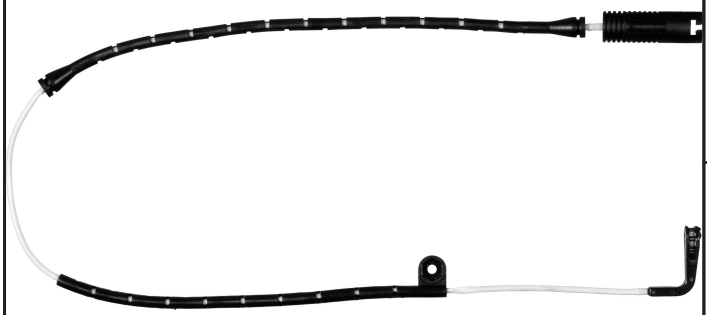





98020700

ALPINA, BMW

545 mm

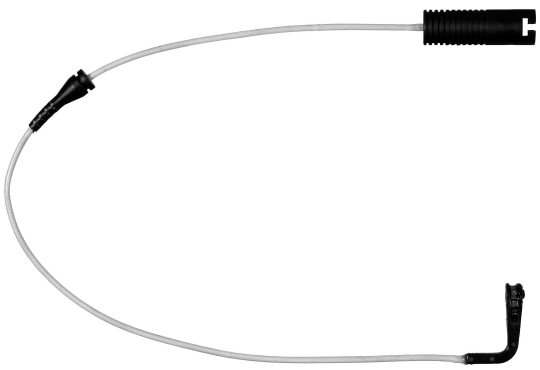

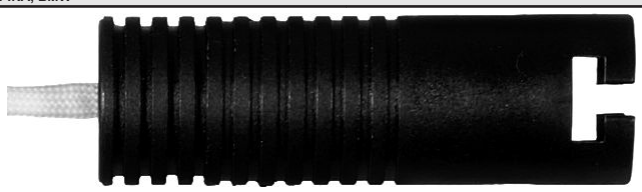



98020800

BMW

840 mm

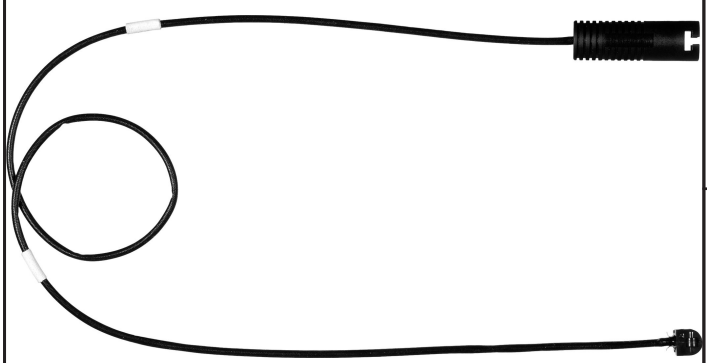

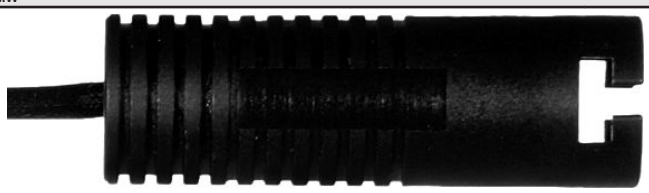

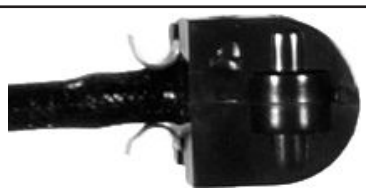

98020900

MERCEDES-BENZ, PUCH

265 mm



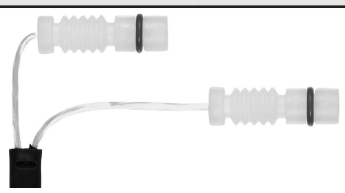



98021100

HOLDEN, OPEL, VAUXHALL

660 mm

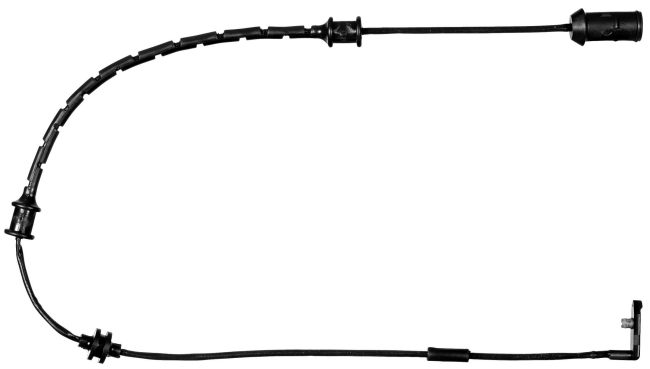





98021200

OPEL, VAUXHALL

660 mm

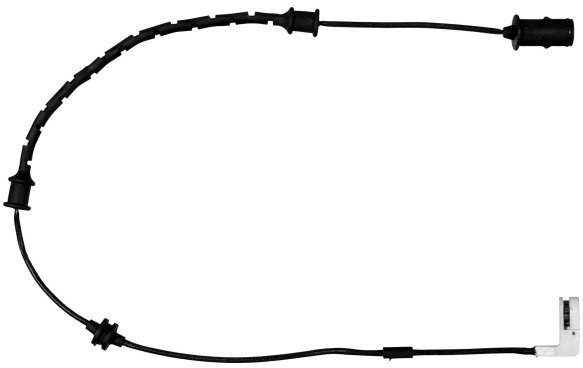



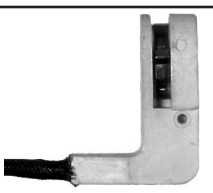

98021300

CHRYSLER, MERCEDES-BENZ

90 mm



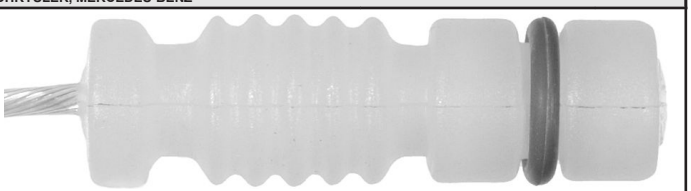



98021301

CHRYSLER, MERCEDES-BENZ

90 mm



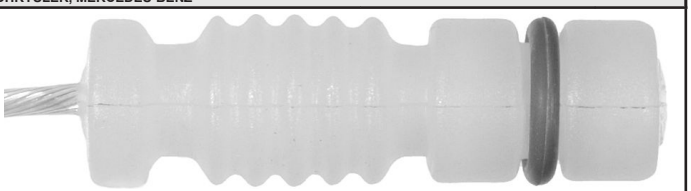



Illustrations

98021302

MERCEDES-BENZ, PUCH

90 mm



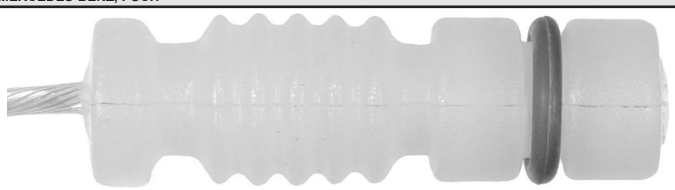



98022000

MERCEDES-BENZ

214 mm / 238 mm

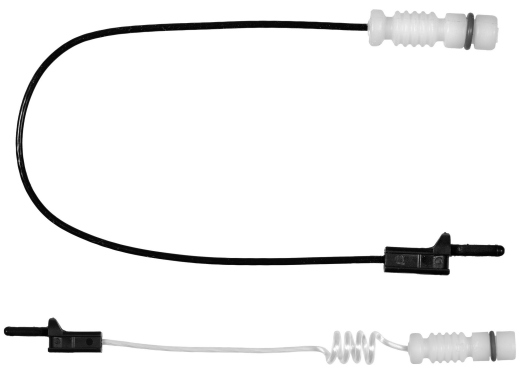

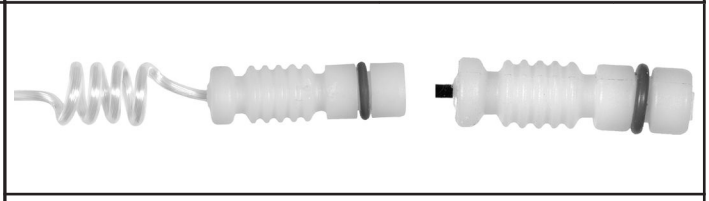

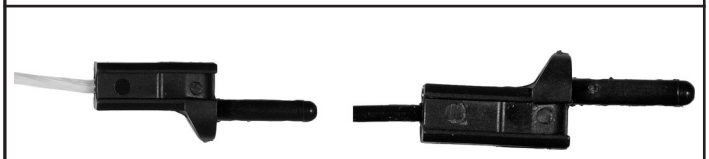

98022600

PORSCHE

555 mm

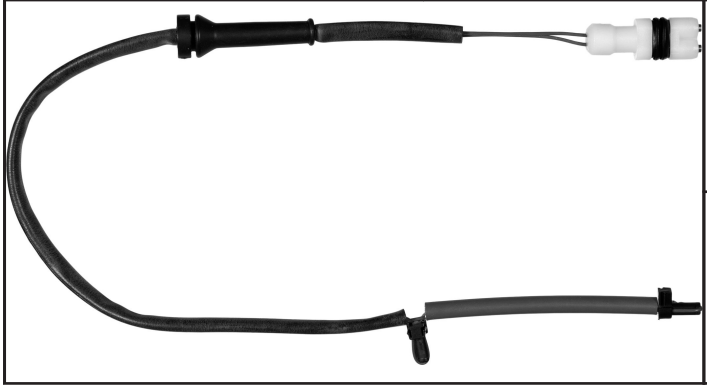

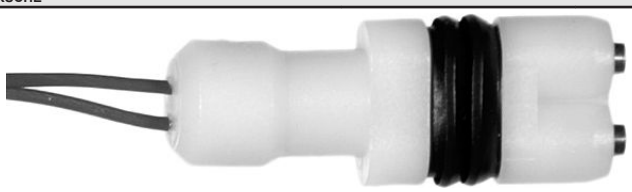



98022700

PORSCHE

555 mm

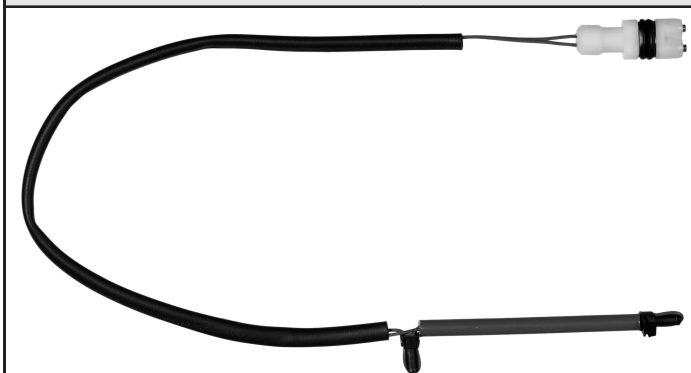

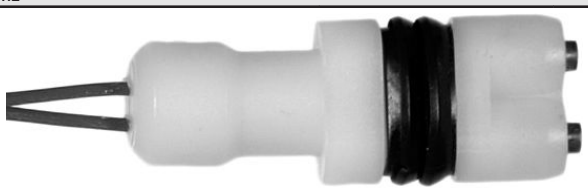



98023300

CHEVROLET, HOLDEN, OPEL, VAUXHALL

720 mm

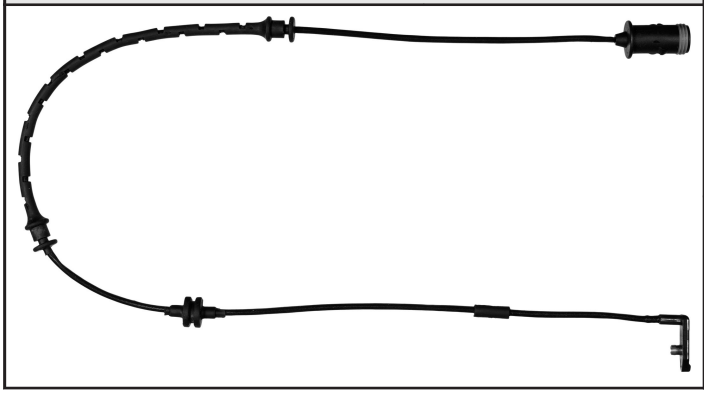



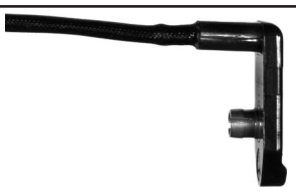

98023900

BMW

596 mm

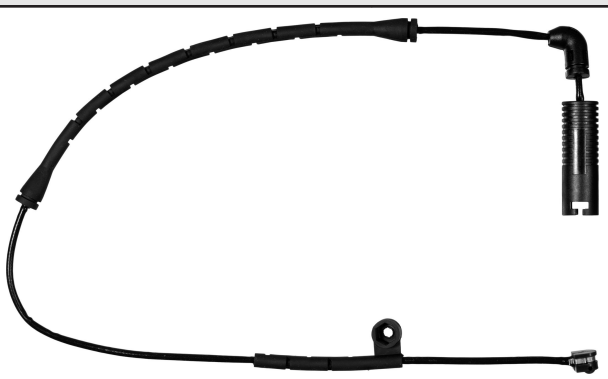





98024000

BMW

1338 mm

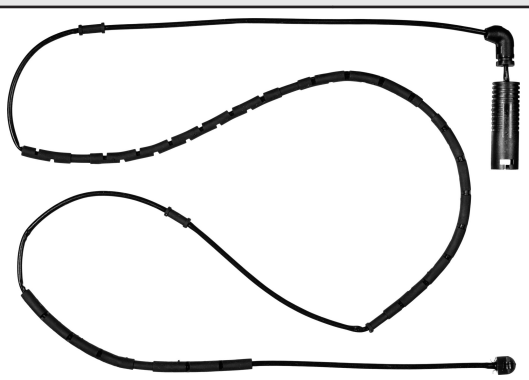

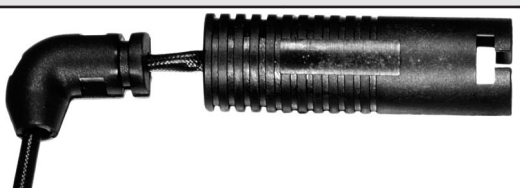



98024700

MAYBACH, MERCEDES-BENZ, MERCEDES-BENZ (BBDC)

95 mm

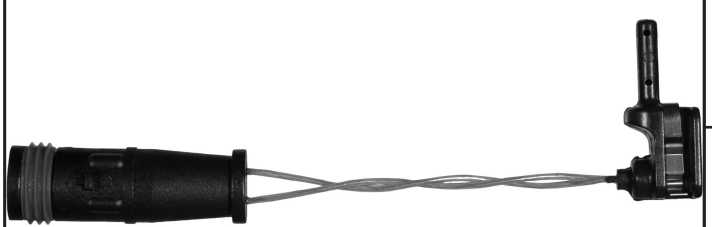

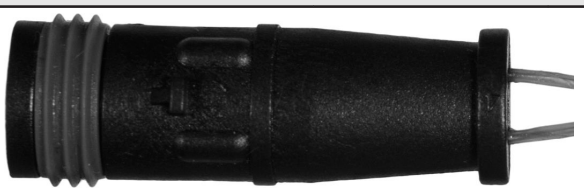

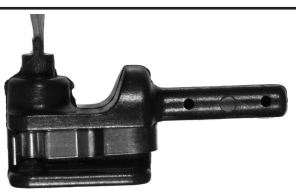

98024701

MAYBACH, MERCEDES-BENZ, MERCEDES-BENZ (BBDC)

95 mm

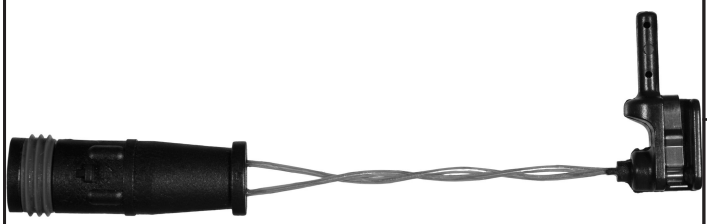

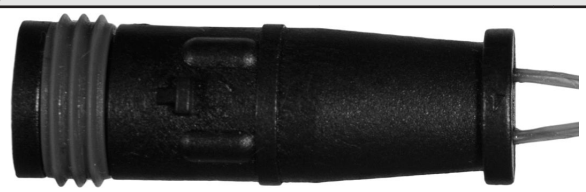

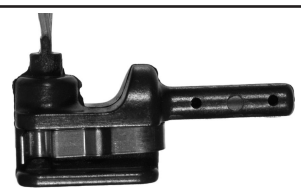

98024800

IVECO

300 mm



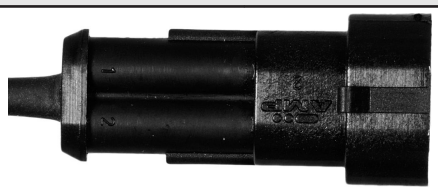

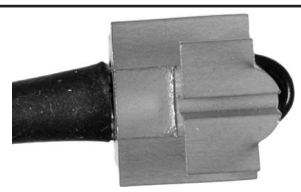

98024900

BMW

1100 mm

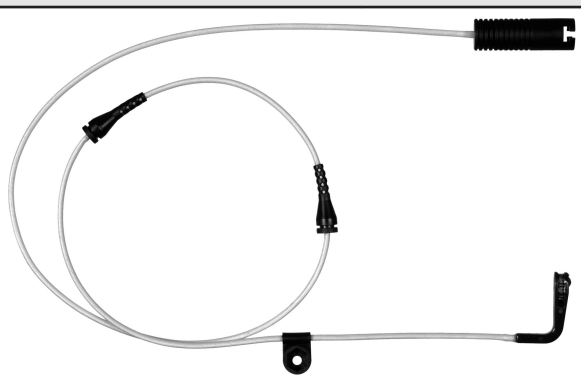

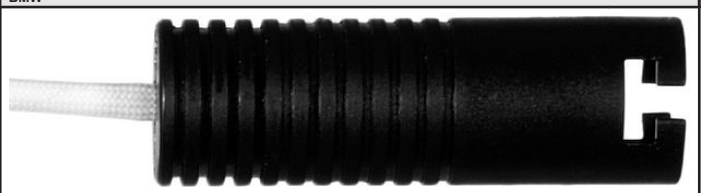



98026200

MERCEDES-BENZ

239 mm

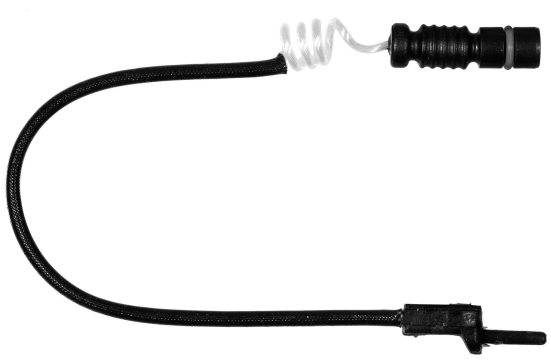





98026400

MERCEDES-BENZ

185 mm / 199 mm

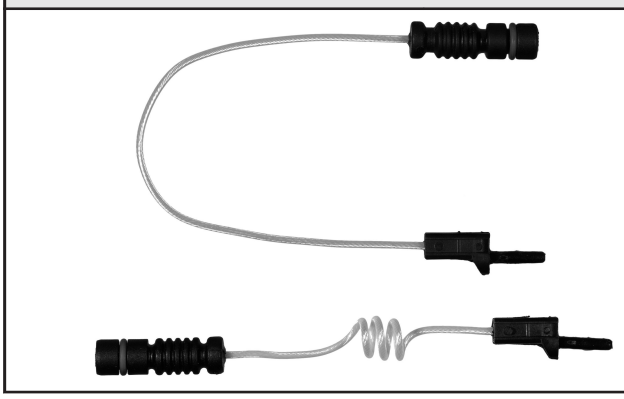

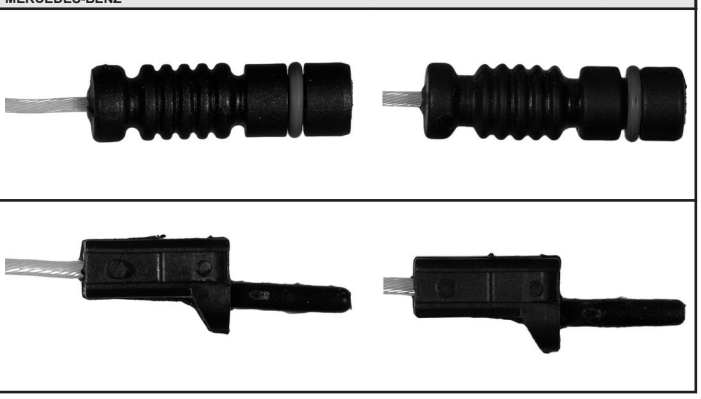

98026500

MG, ROEWE (SAIC), ROVER

1120 mm



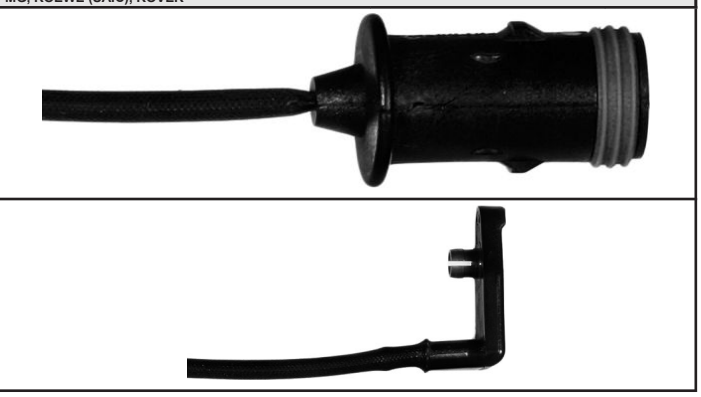

98026600

MG, ROEWE (SAIC), ROVER

850 mm

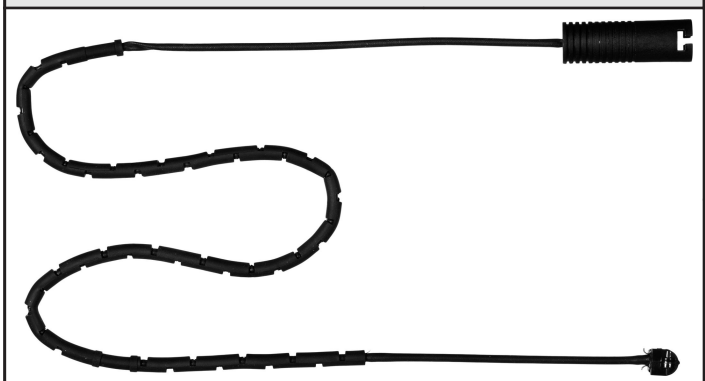

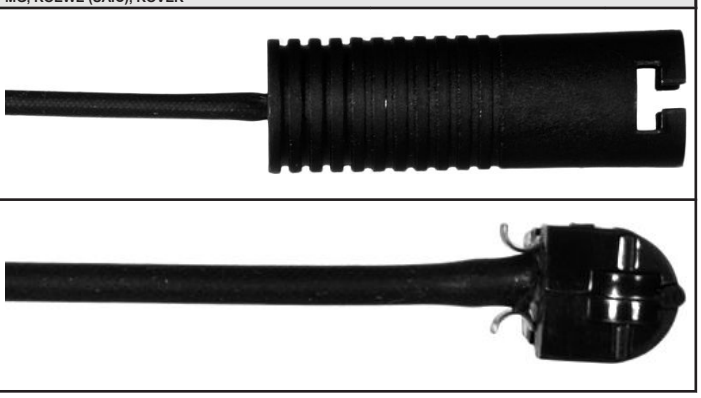

98026700

BMW

800 mm

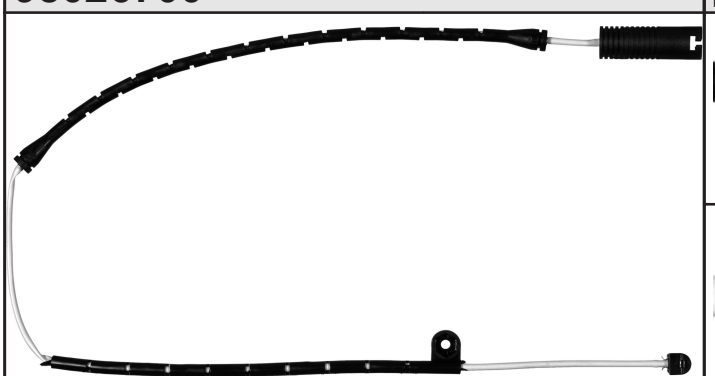

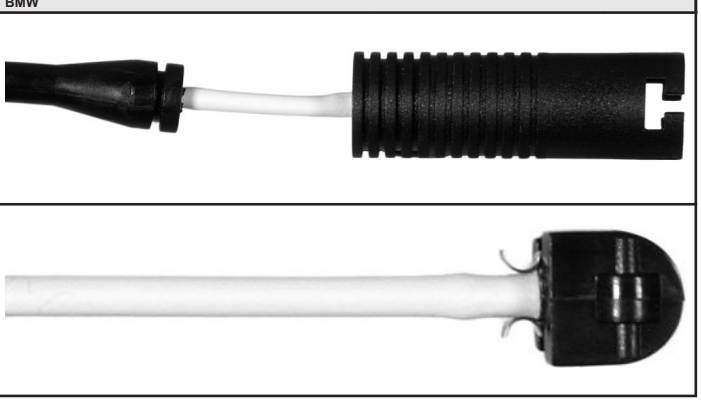

98026800

BMW

715 mm

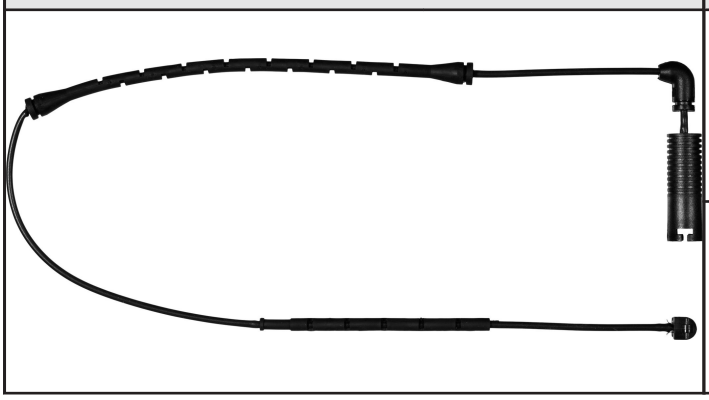

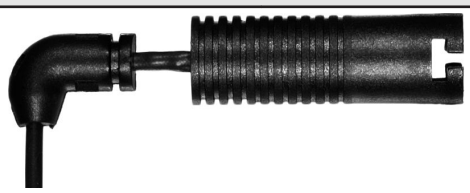



98026900

BMW

650 mm

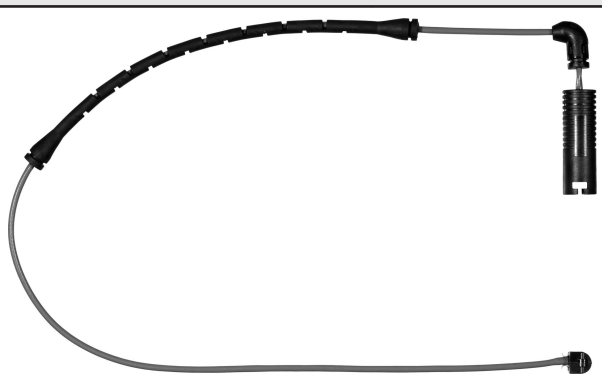

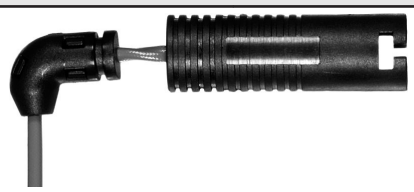



98027000

ALPINA, BMW

760 mm

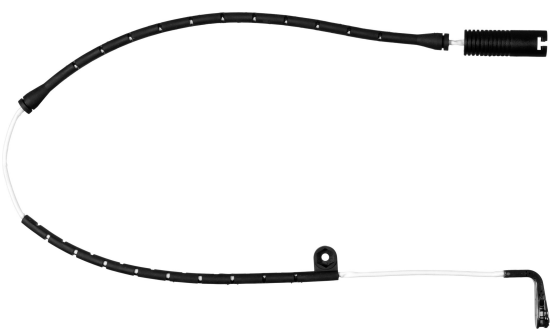

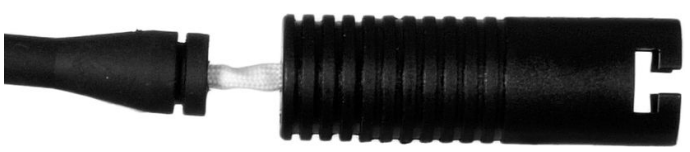



98027100

MERCEDES-BENZ

147 mm

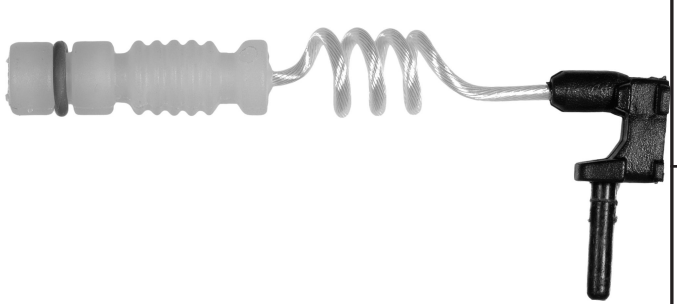

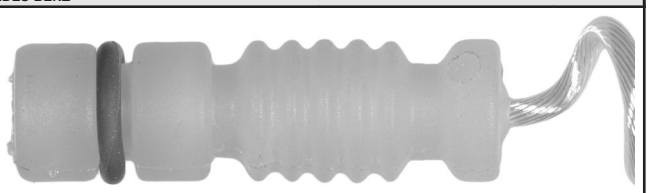

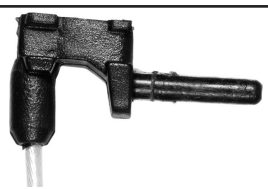

98027101

MERCEDES-BENZ

147 mm

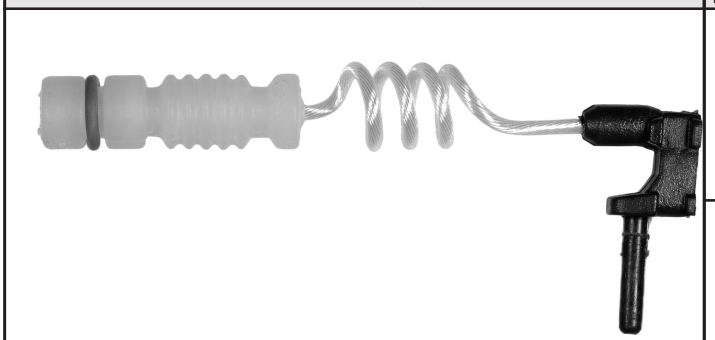

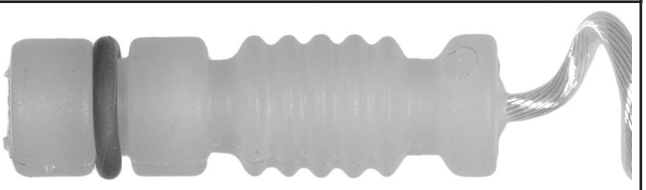



98027102

MERCEDES-BENZ

147 mm

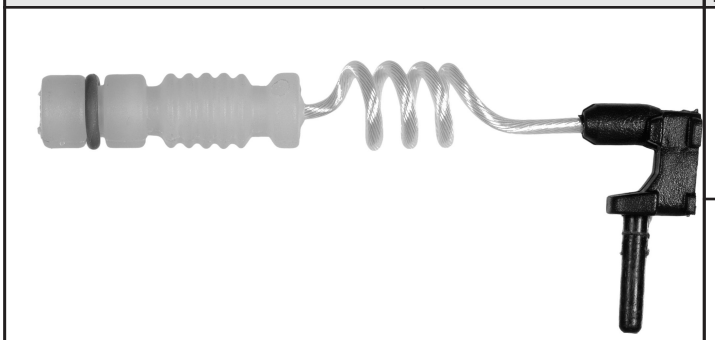

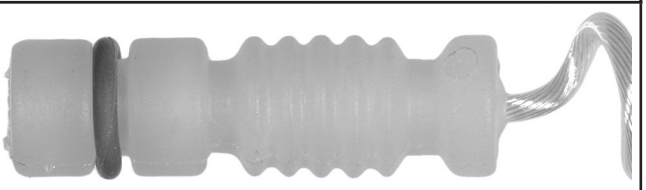

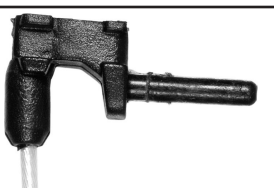

98027200

BMW

585 mm

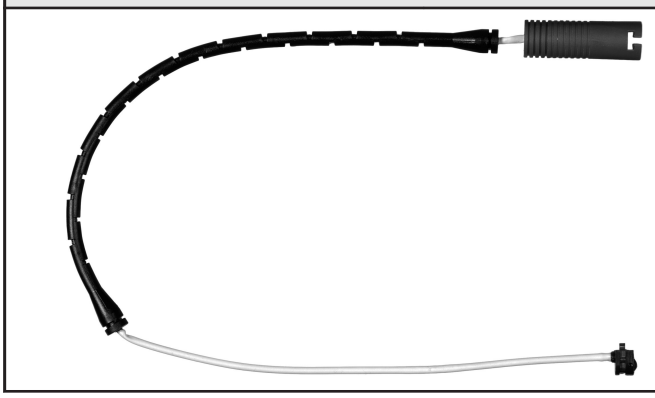



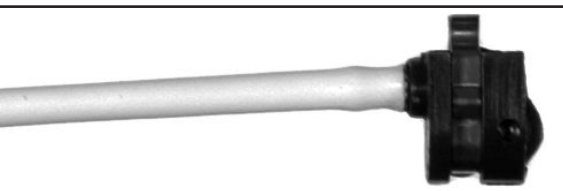

98027300

BMW

1350 mm

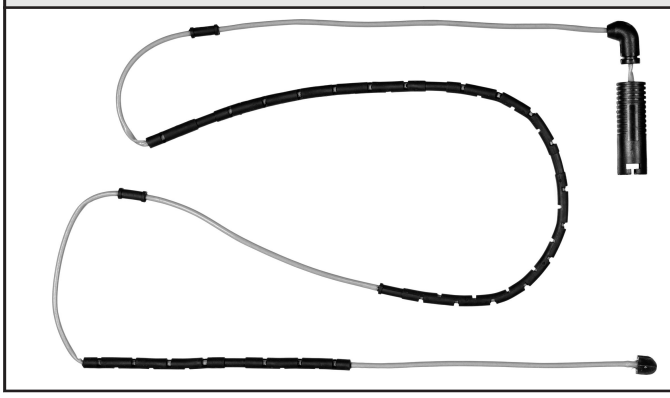

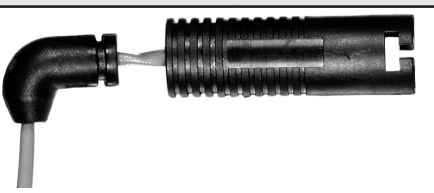

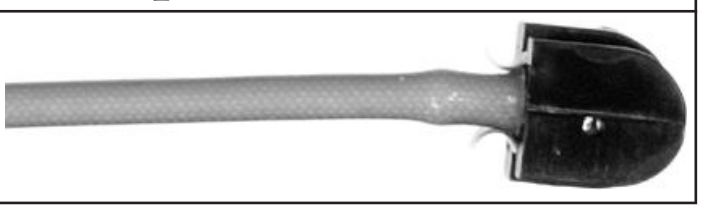

98028500

RENAULT TRUCKS

260 mm

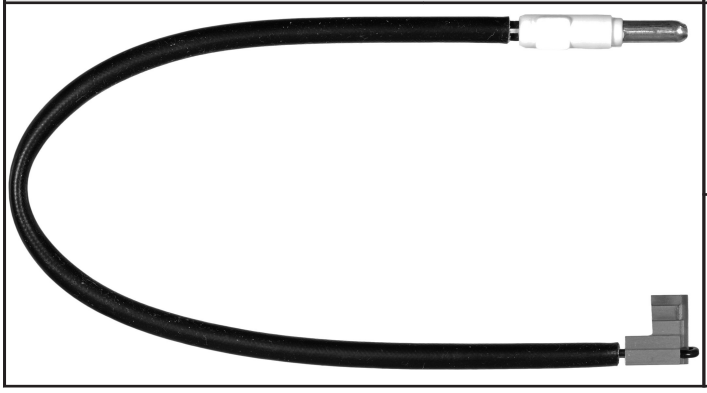



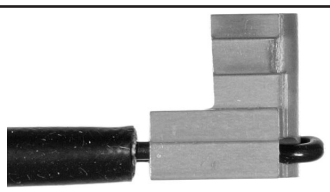

98029100

CADILLAC, CHEVROLET, FIAT, HOLDEN, OPEL, VAUXHALL

685 mm

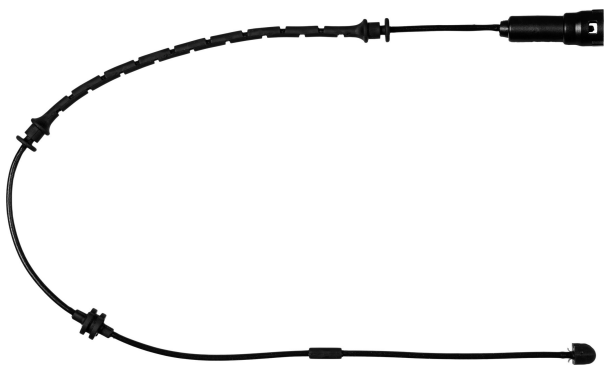

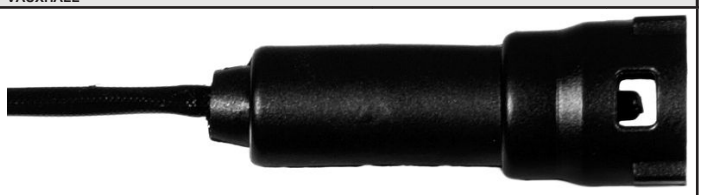



98029200

BMW

830 mm

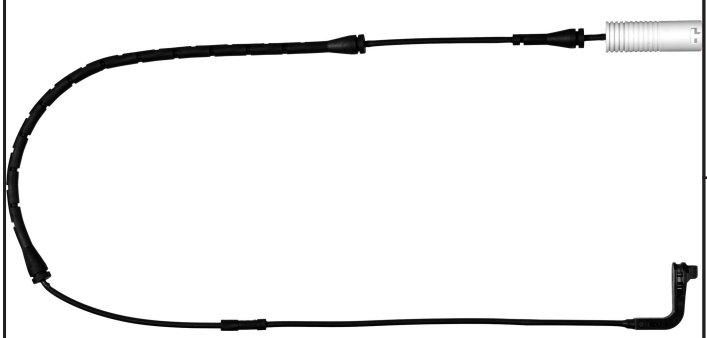





98029300

BMW

845 mm

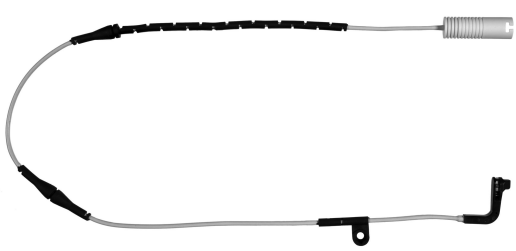





98029400

MERCEDES-BENZ, MERCEDES-BENZ (BBDC)

94 mm / 101 mm

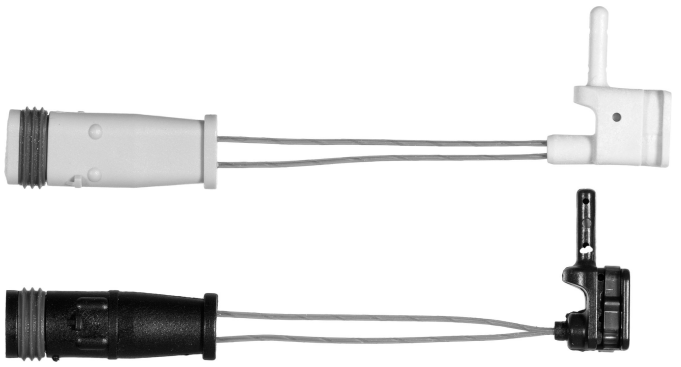



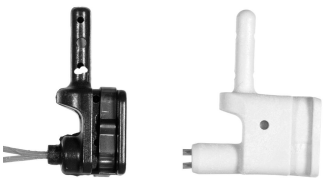

98029500

AUDI, PORSCHE, VOLKSWAGEN

270 mm





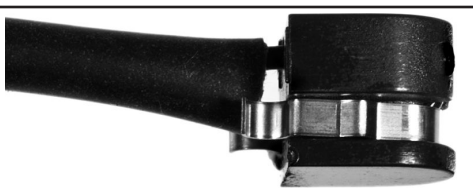

98029600

VOLKSWAGEN

235 mm

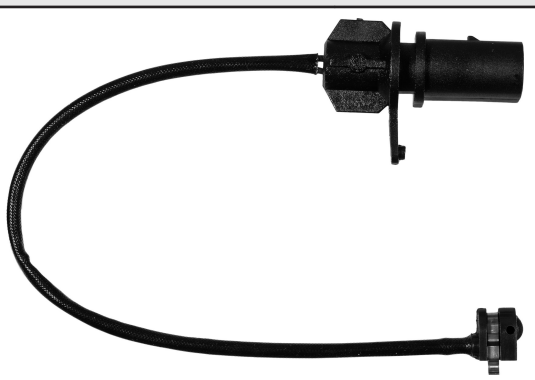

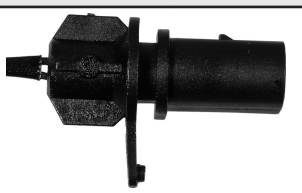



98029700

CHEVROLET, HOLDEN, OPEL, VAUXHALL

693 mm

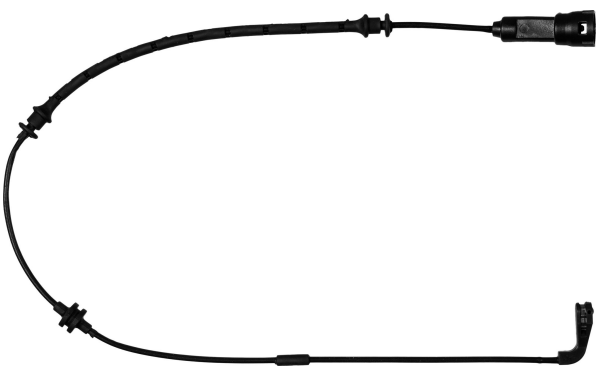





98029800

CHEVROLET, HOLDEN, OPEL, VAUXHALL

750 mm

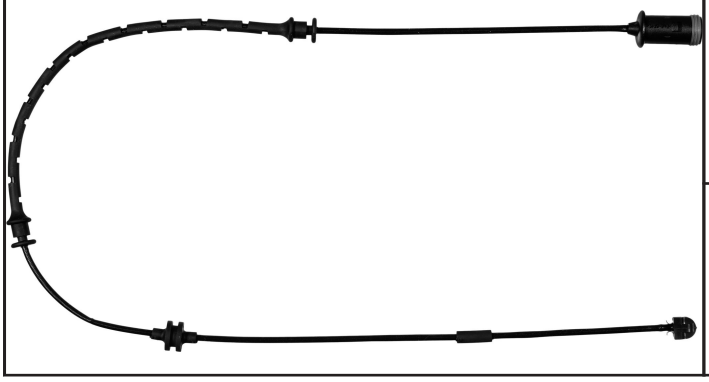





98029900

BMW

1220 mm

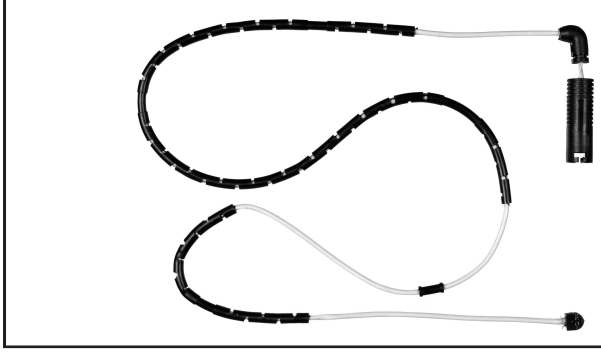



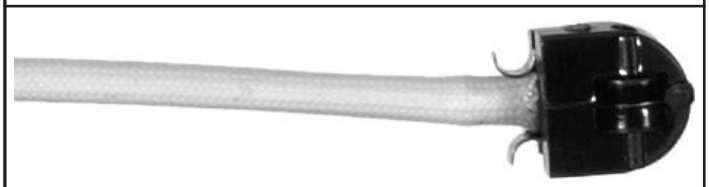

98030000

MERCEDES-BENZ

114 mm



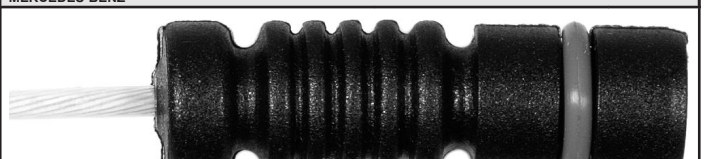

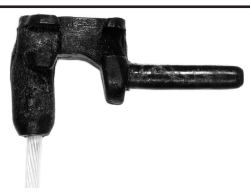

98030100

CHEVROLET, HOLDEN, OPEL, VAUXHALL

302 mm

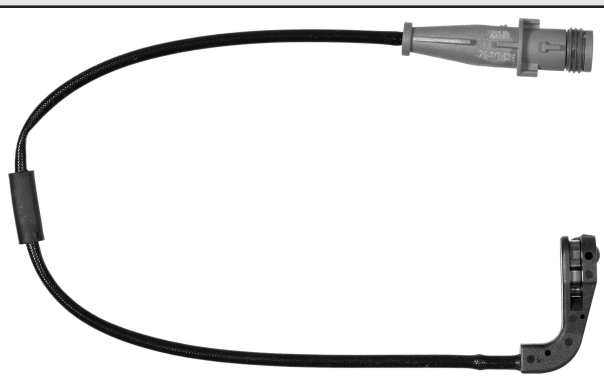

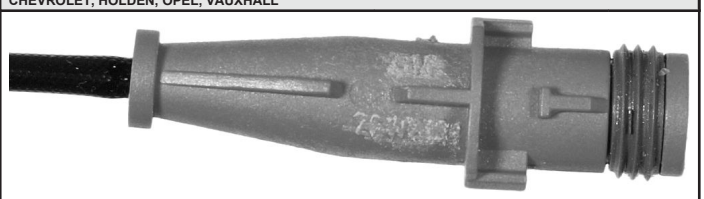



98030200

MINI

885 mm

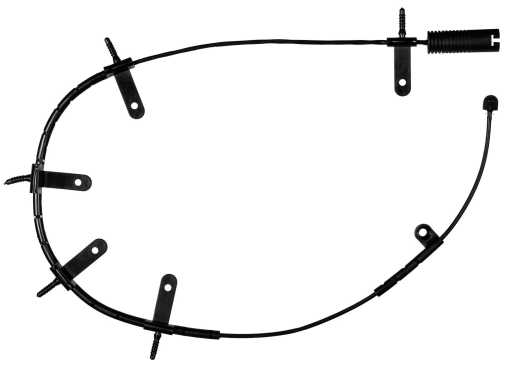

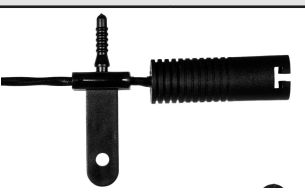

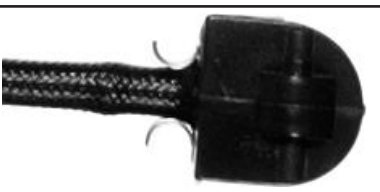

98030300

MINI

1095 mm

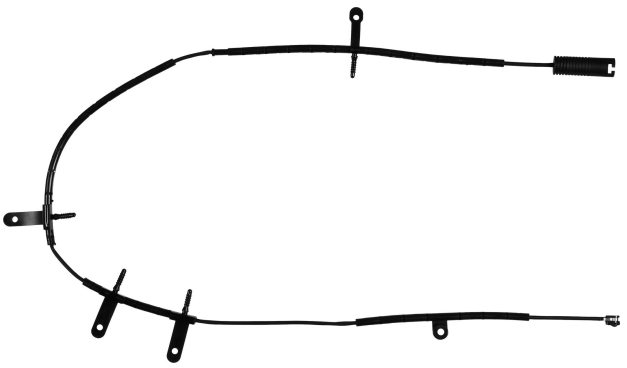





98030400

BMW, BMW (BRILLIANCE)

670 mm

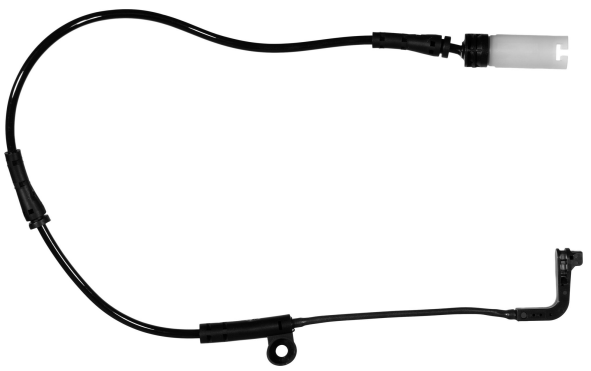





98030500

BMW, BMW (BRILLIANCE)

685 mm

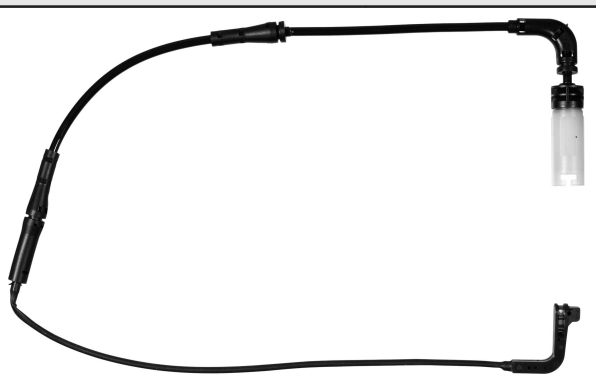





98030600

BMW

740 mm

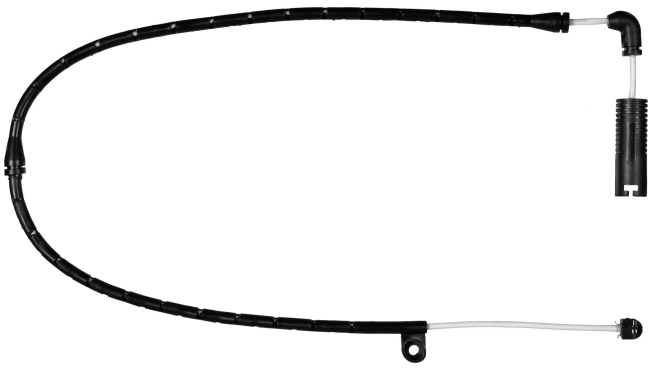



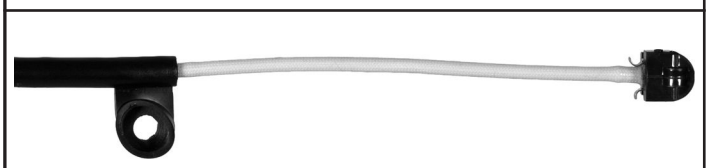

98030700

BMW

1055 mm

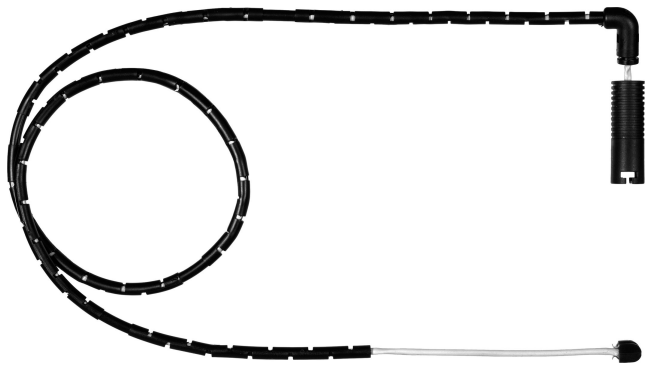





98030800

MERCEDES-BENZ

74 mm

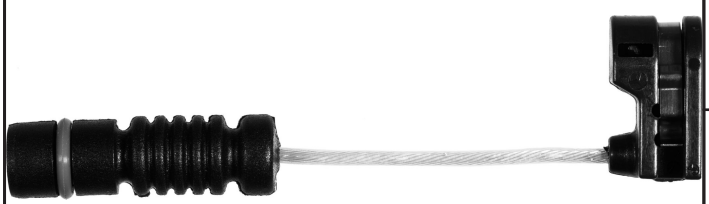

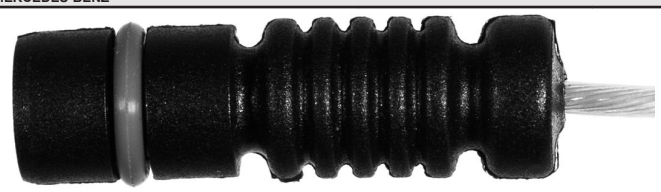



98030900

AUDI, PORSCHE, VOLKSWAGEN

420 mm



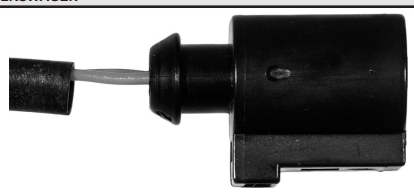

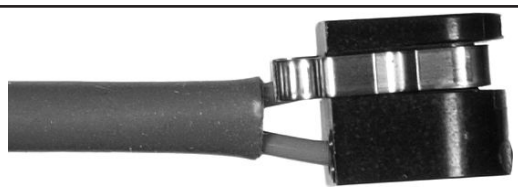

98031000

AUDI, PORSCHE, VOLKSWAGEN

255 mm

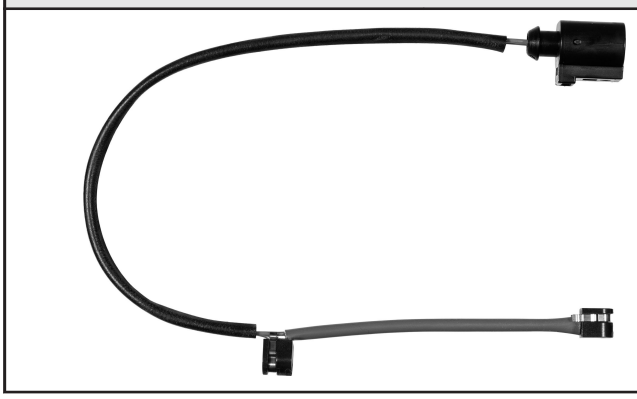



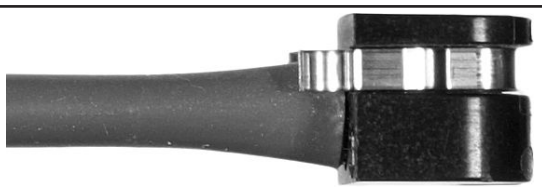

98031100

BMW

883 mm

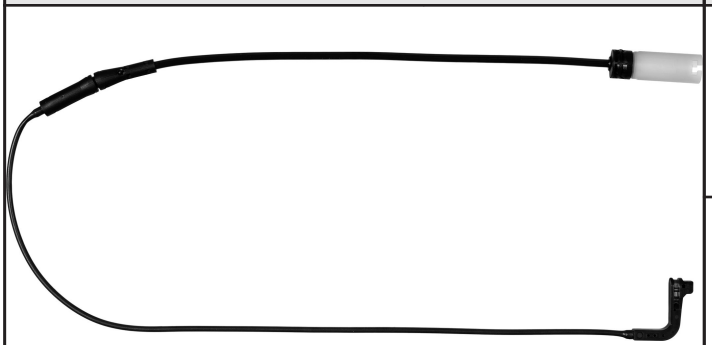

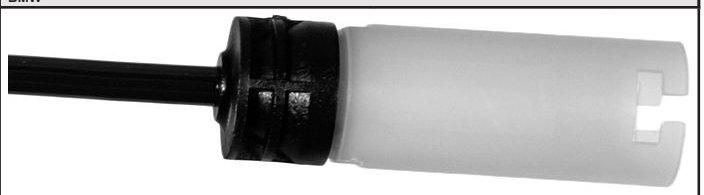



98031200

BMW

635 mm

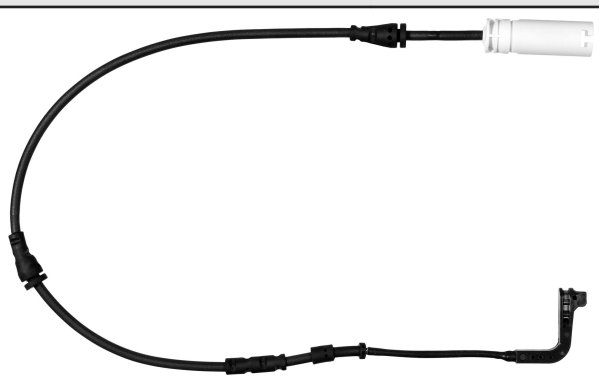





98031300

BMW, BMW (BRILLIANCE)

1093 mm

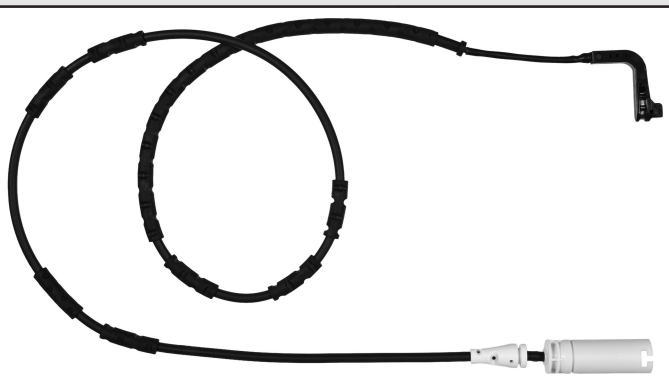





98031400

CHEVROLET, HOLDEN, HSV, OPEL, VAUXHALL

287 mm

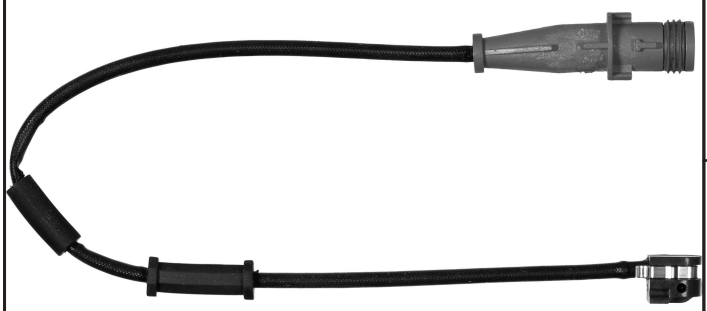



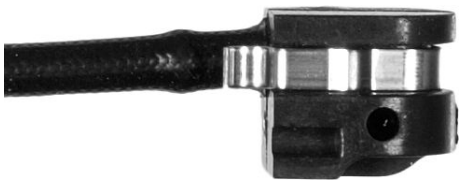

98031700

MERCEDES-BENZ, VOLKSWAGEN

189 mm



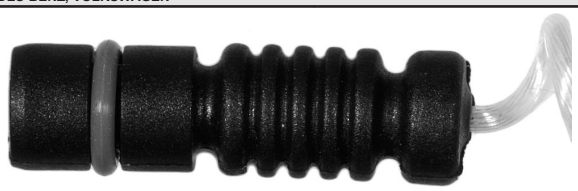

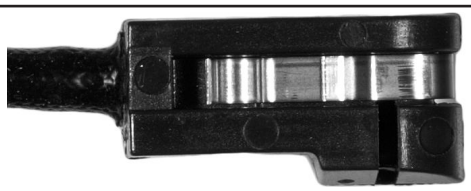

98033700

MERCEDES-BENZ, MERCEDES-BENZ (FJDA), VOLKSWAGEN

103 mm







98033800

MERCEDES-BENZ, MERCEDES-BENZ (FJDA), VOLKSWAGEN

95 mm

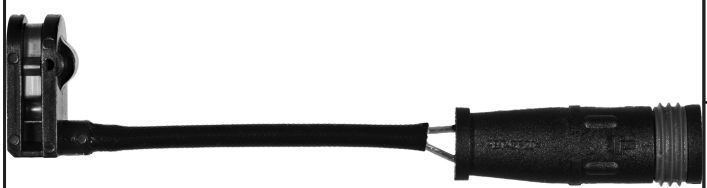





98034000

LAND ROVER

1230 mm

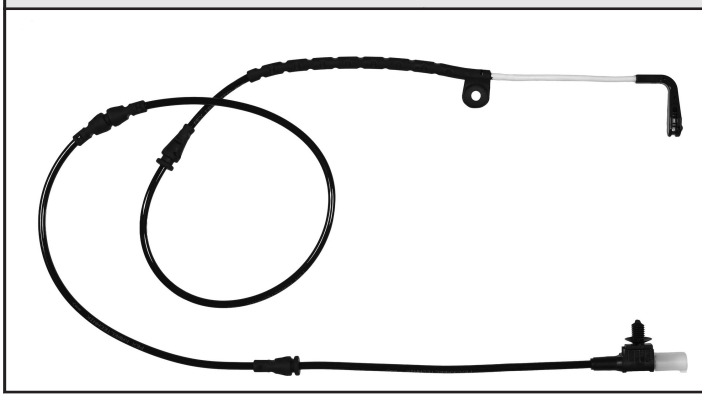

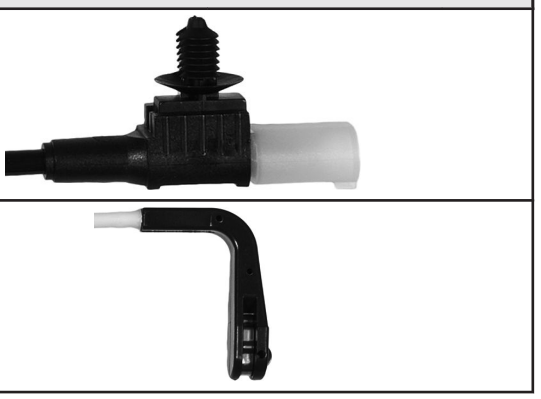

98035000

BMW

960 mm

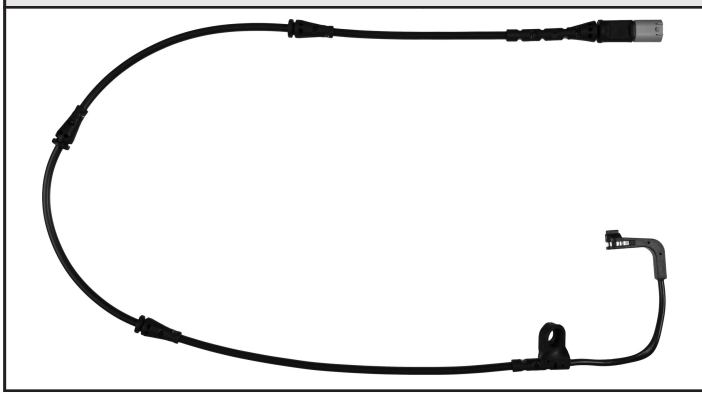



98035100

BMW

953 mm

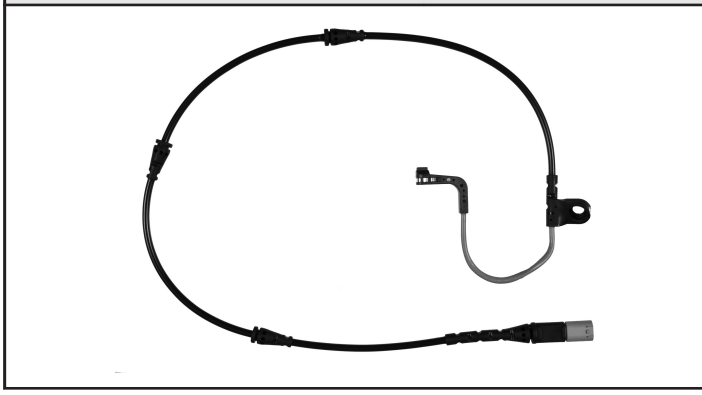

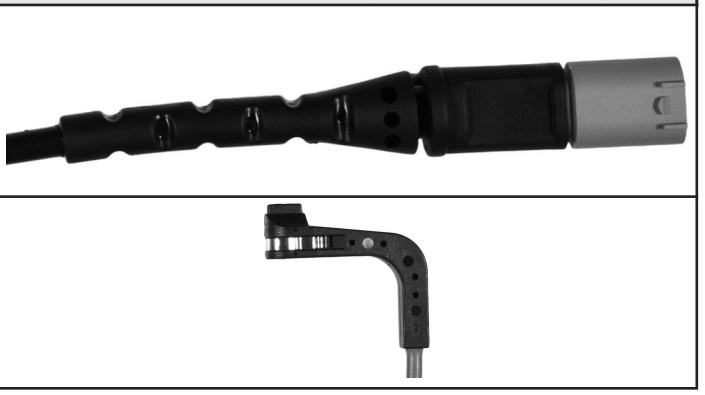

98035200

BMW

1006 mm

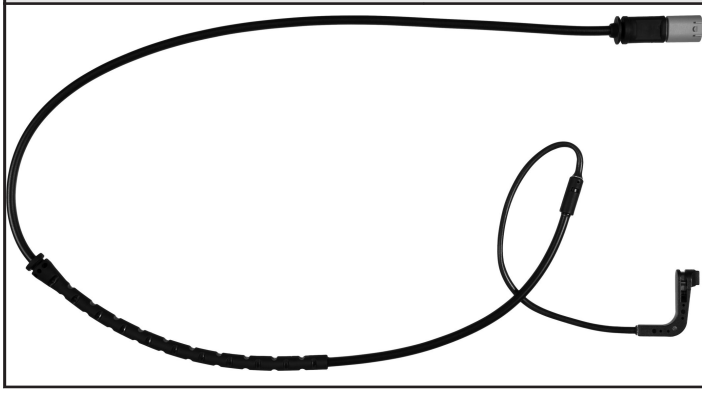

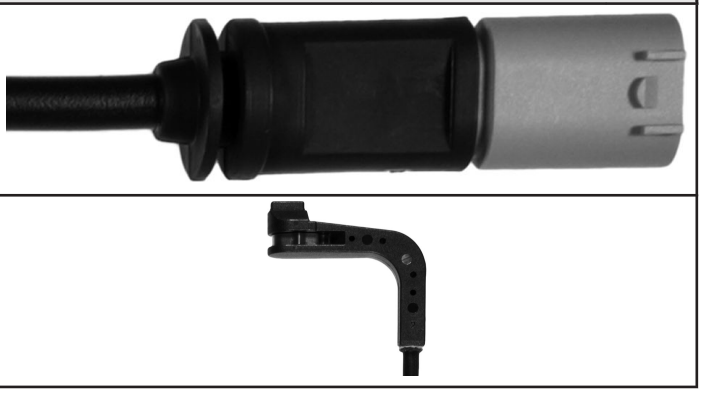

98035300

BMW

612 mm

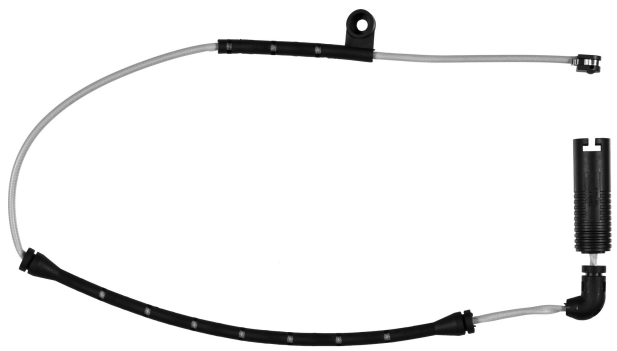





98035400

BMW

1160 mm

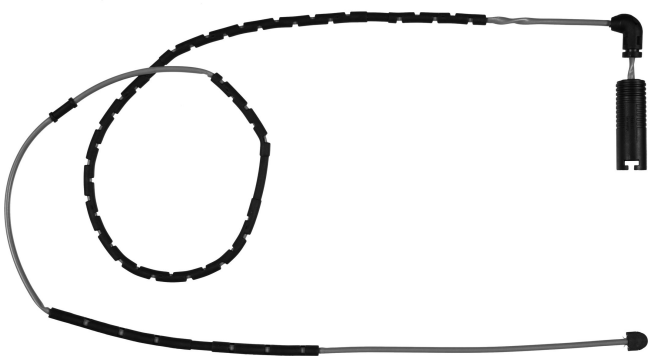



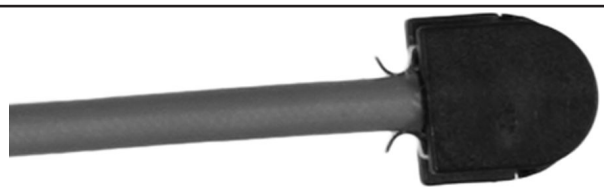

98035500

BMW

850 mm

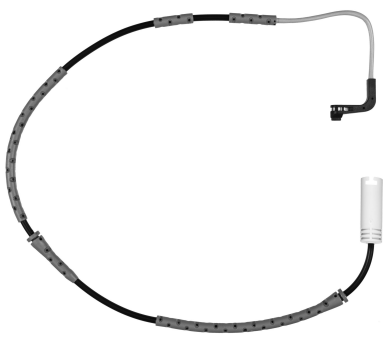





98036100

BMW

744 mm

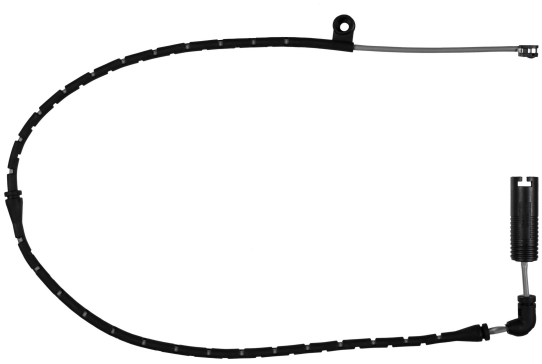



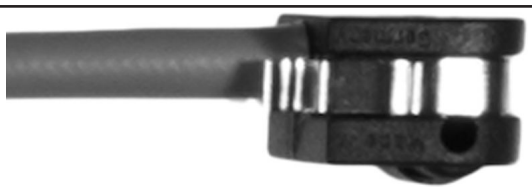

98036200

MINI

807 mm

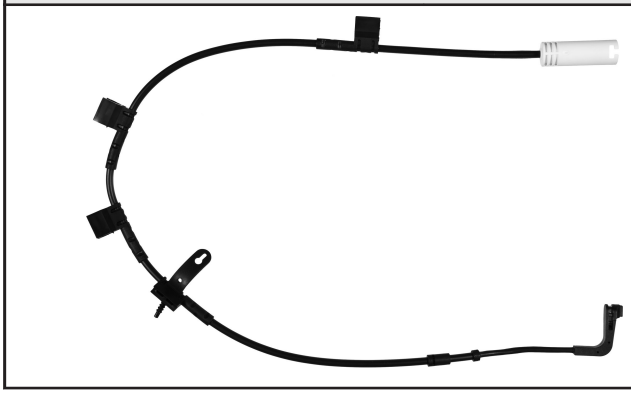



98036300

MINI

1127 mm

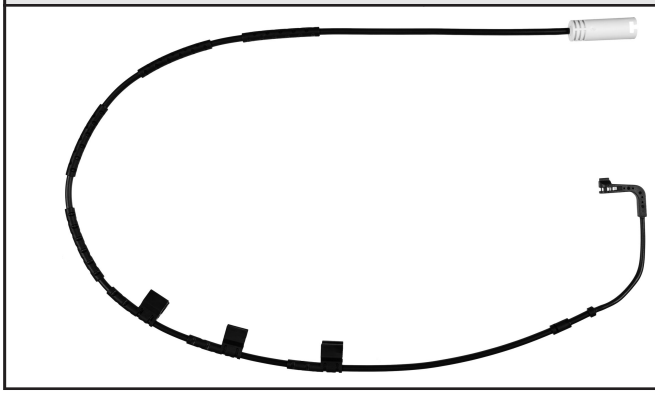

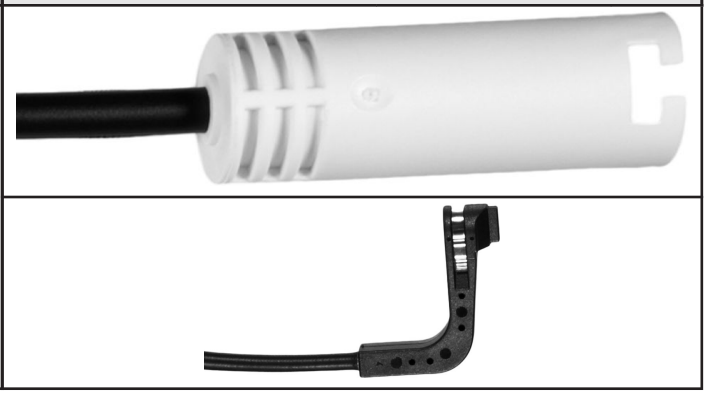

98036400

MERCEDES-BENZ

98 mm

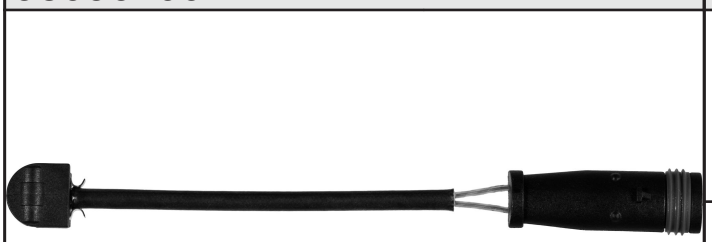

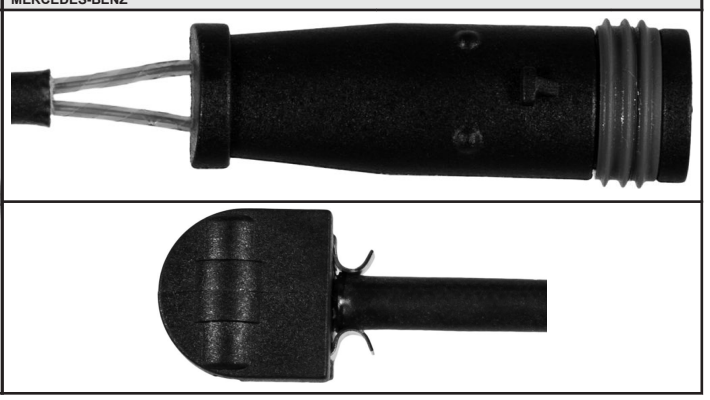

98036401

MERCEDES-BENZ

98 mm



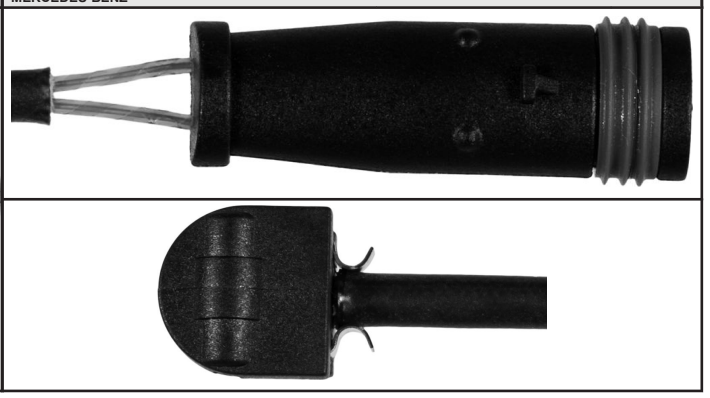

98036500

MERCEDES-BENZ, VOLKSWAGEN

85 mm







98037200

PORSCHE

358 mm / 378 mm



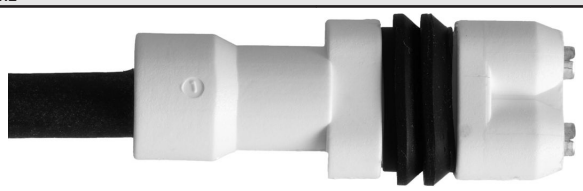

98037300

PORSCHE

405 mm

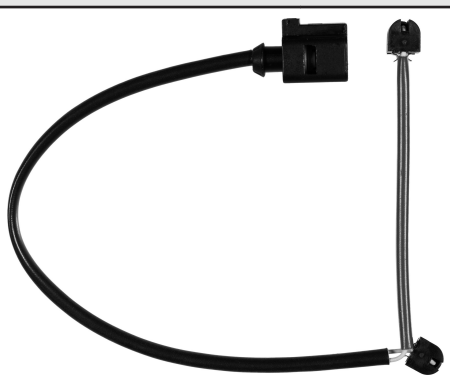

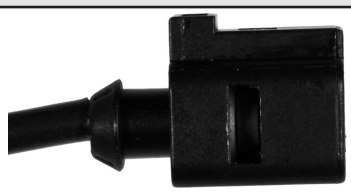

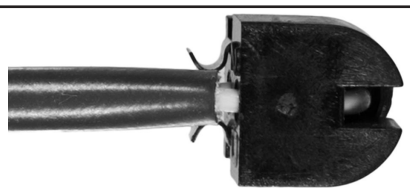

98037800

PORSCHE

560 mm





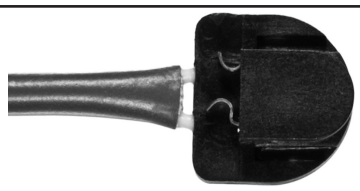

98037900

PORSCHE

365 mm

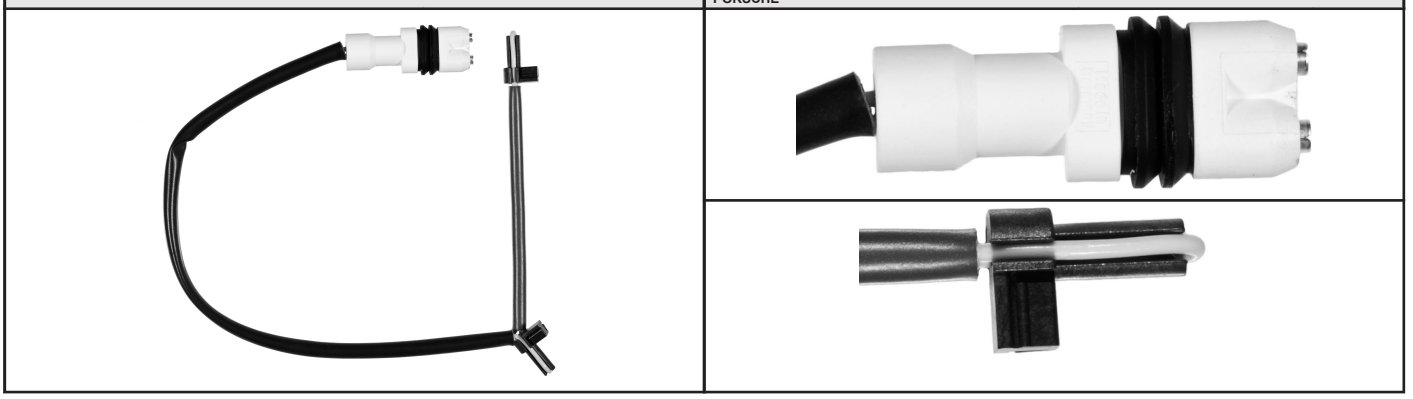

98038000

PORSCHE

388 mm

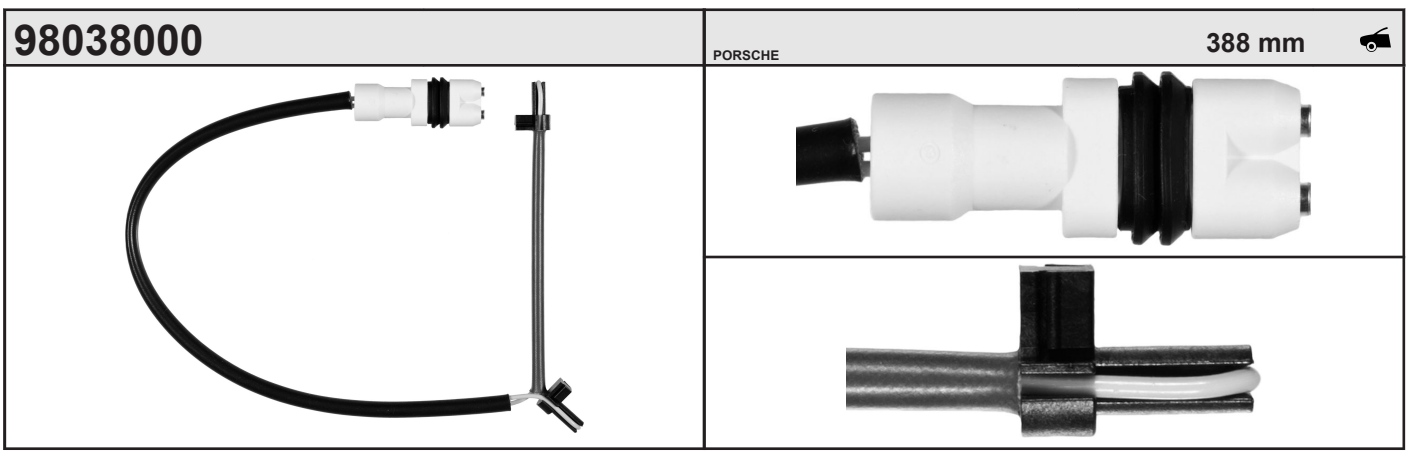

98038200

PORSCHE

515 mm

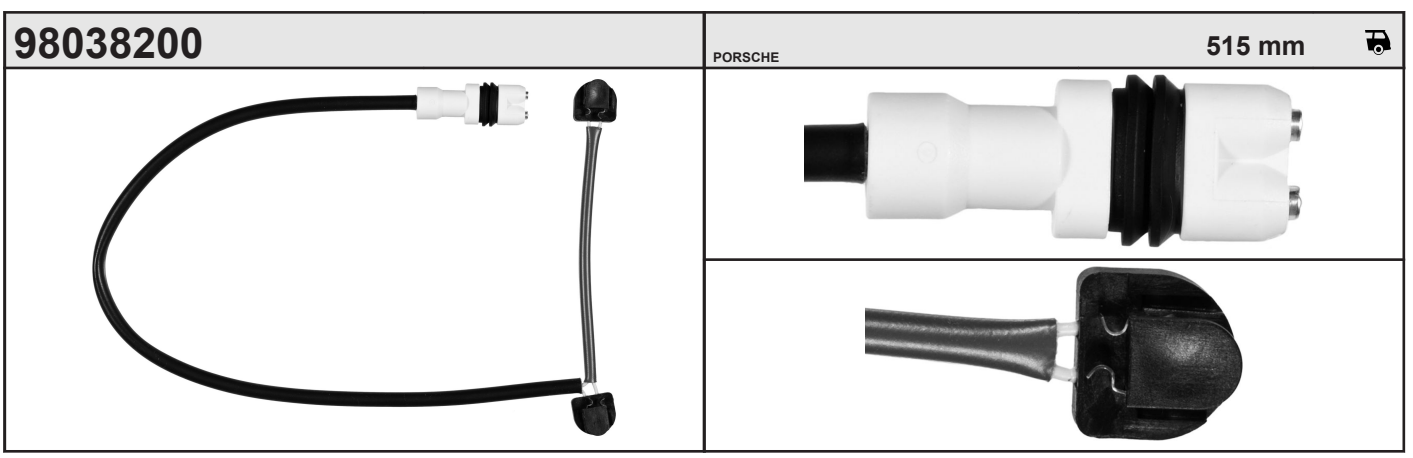

98038300

PORSCHE

550 mm

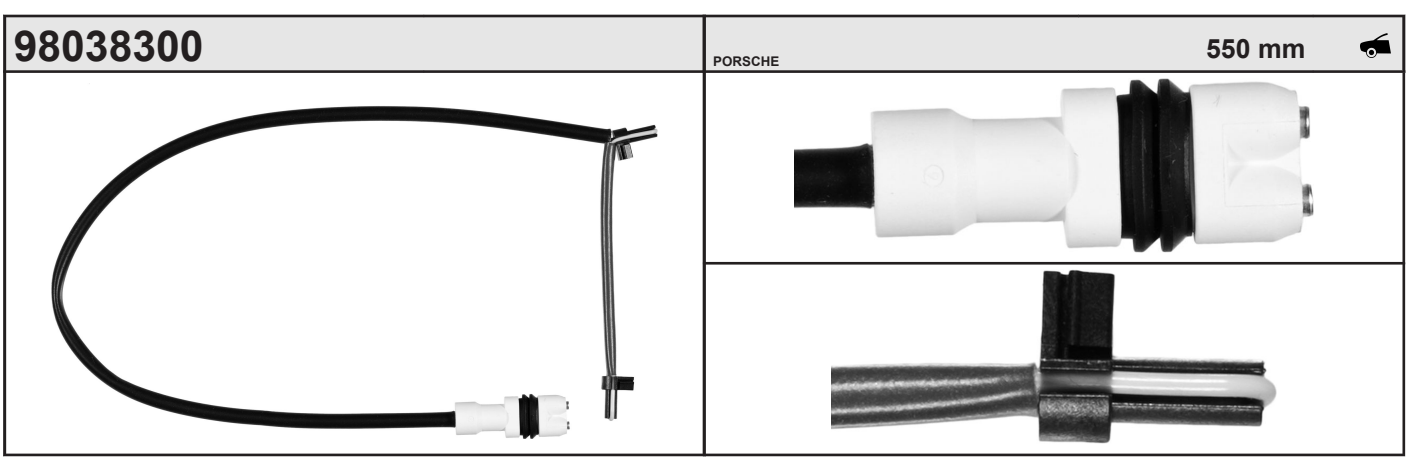

98038600

AUDI

305 mm

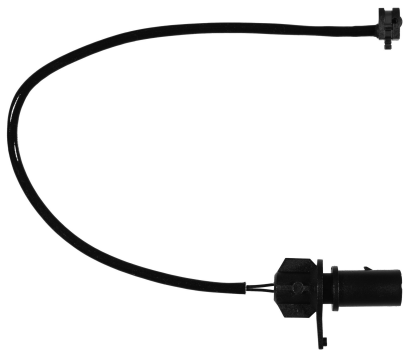

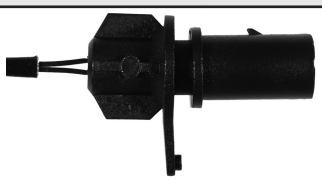

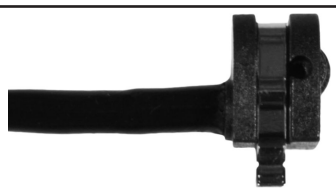

98038700

AUDI

287 mm

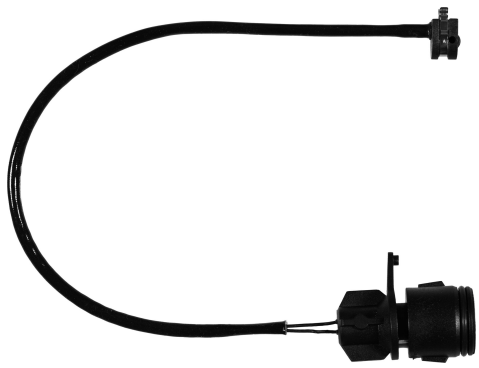

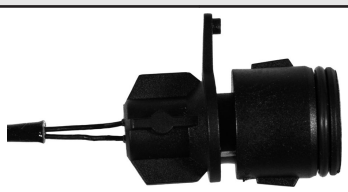

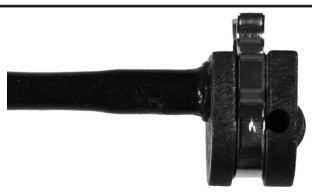

98038800

PORSCHE, VOLKSWAGEN

370 mm



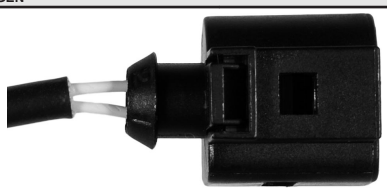

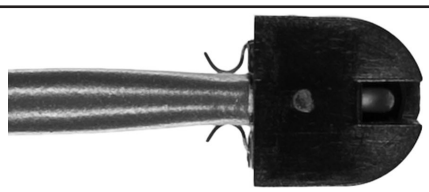

98038900

AUDI, PORSCHE

240 mm



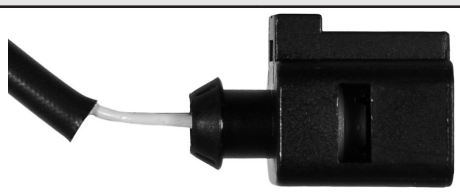

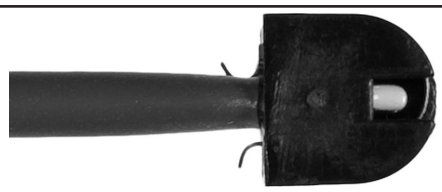

98039200

LAND ROVER

780 mm

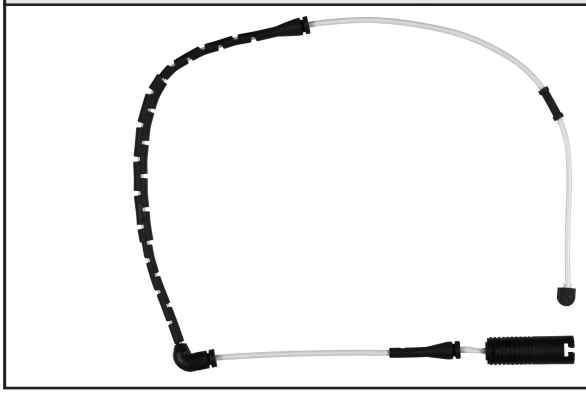



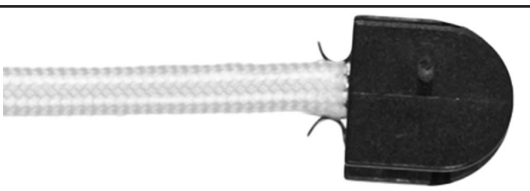

98039300

LAND ROVER

1220 mm

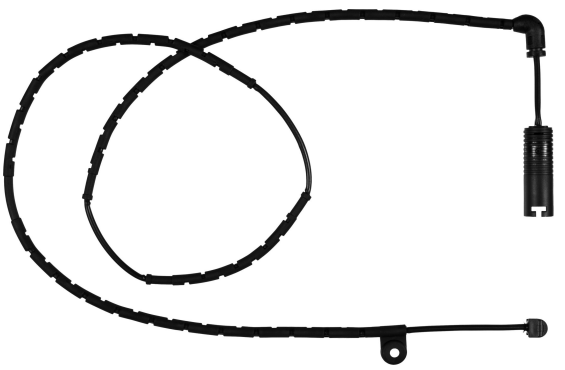

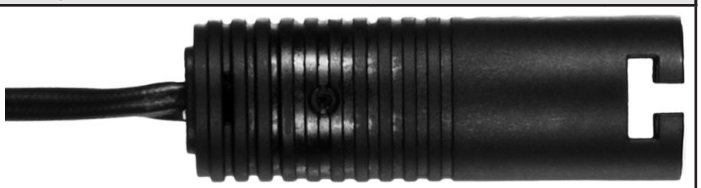



98039400

LAND ROVER

1183 mm

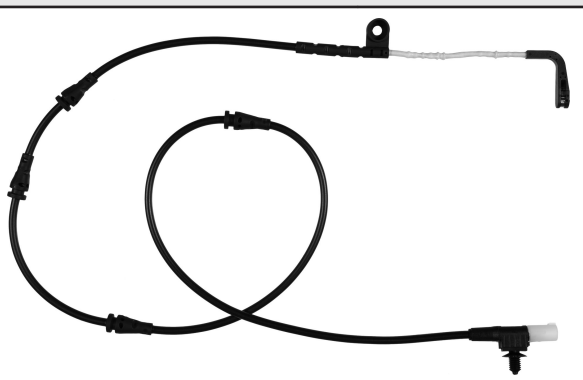



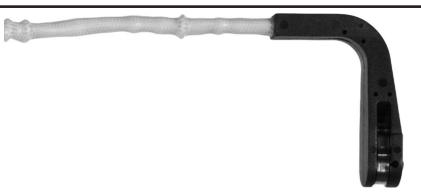

98039500

LAND ROVER

1184 mm

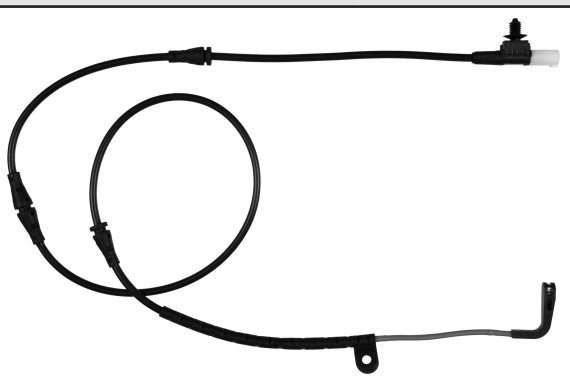

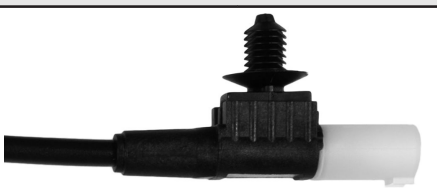

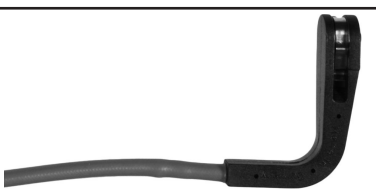

98039600

LAND ROVER

845 mm

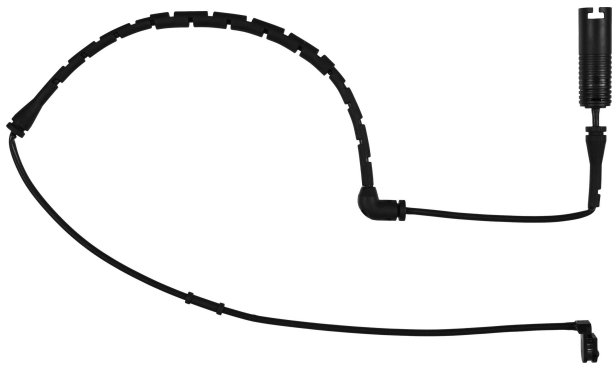





98039700

LAND ROVER

1270 mm

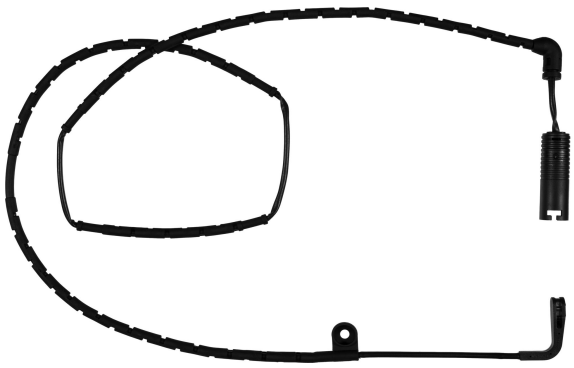



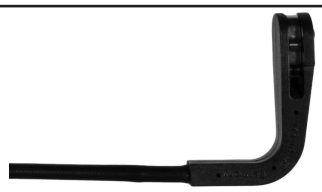

98039900

LAND ROVER

1209 mm

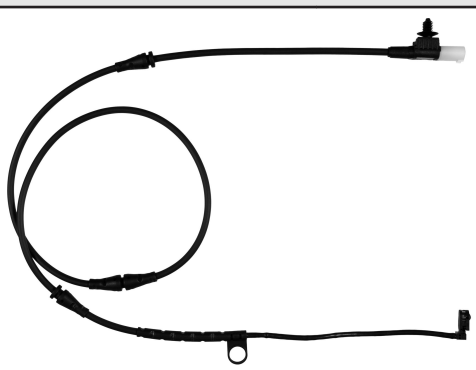

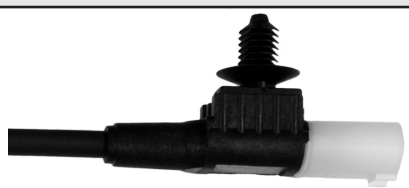



98040100

MERCEDES-BENZ

95 mm





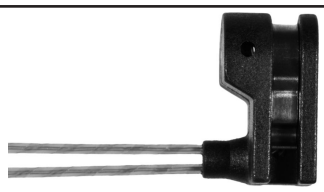

98040200

PORSCHE

505 mm

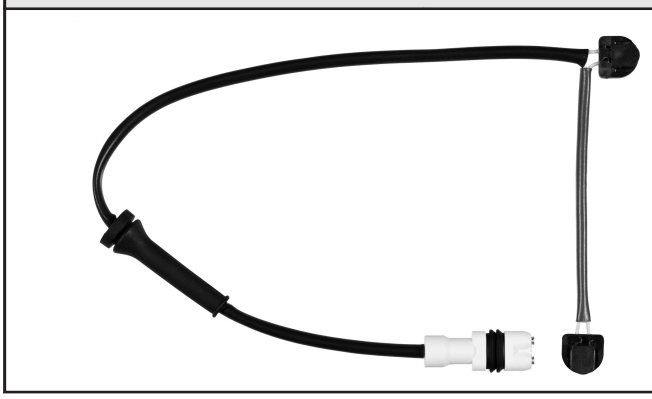

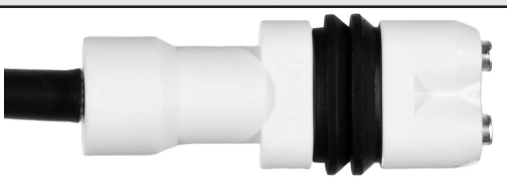

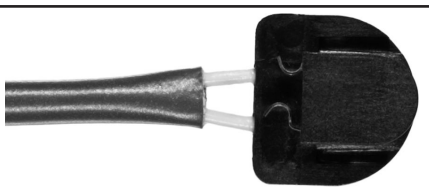

98040300

PORSCHE

612 mm





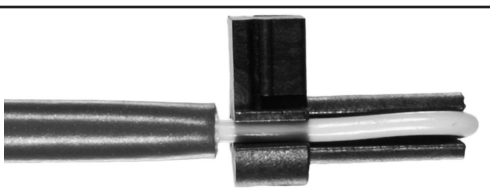

98040700

IVECO

130 mm





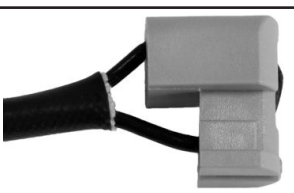

98040800

IVECO

300 mm

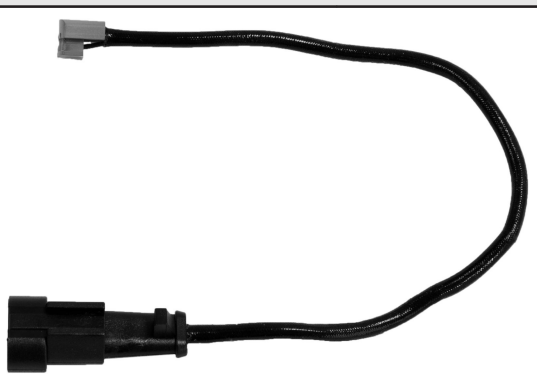



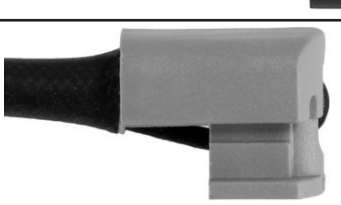

98040900

IVECO

250 mm

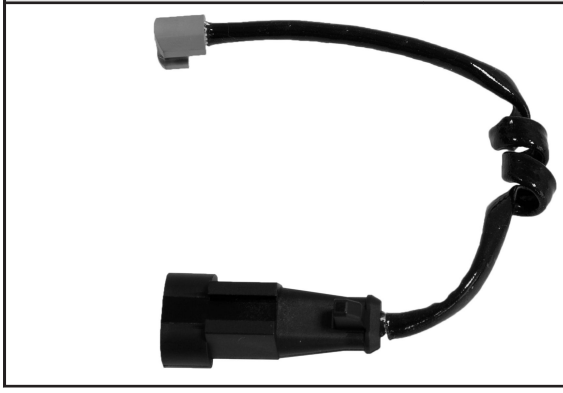



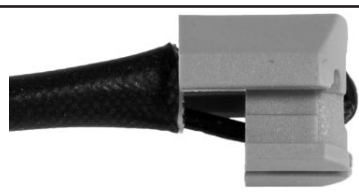

98041200

BMW

689 mm



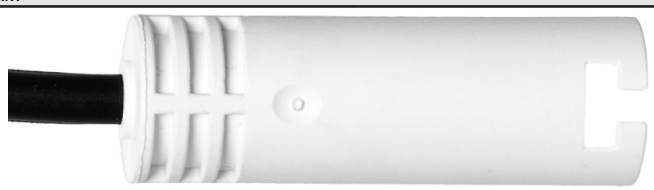



98041300

BMW

990 mm







98041400

BMW

675 mm



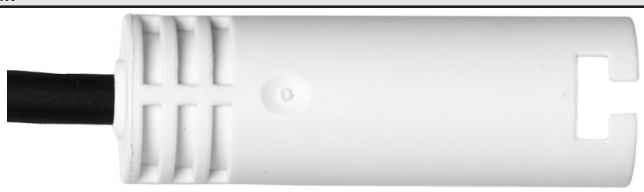



98041500

BMW

690 mm

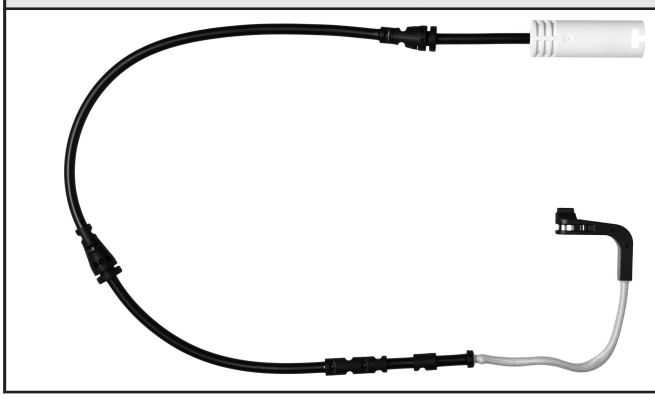





98041600

BMW

1005 mm

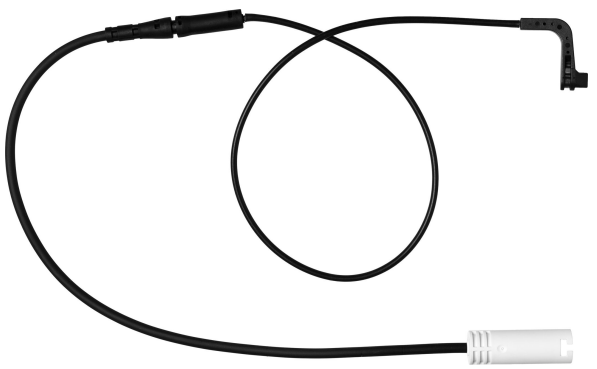





98041700

PORSCHE

490 mm



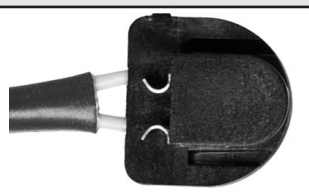



98041800

PORSCHE

500 mm

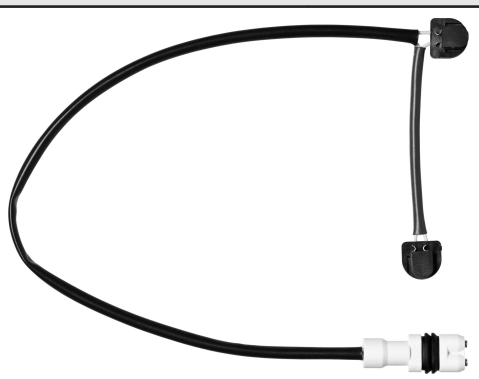

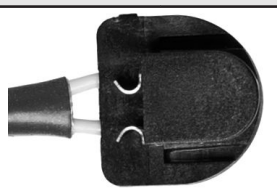



98041900

PORSCHE — 460 mm



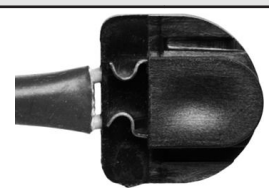



98042000

PORSCHE — 395 mm



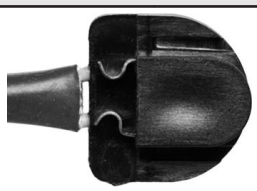



98042100

PORSCHE — 555 mm



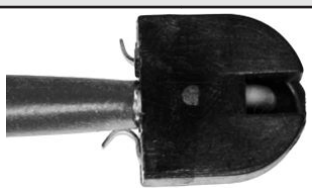



98042200

IVECO — 210 mm





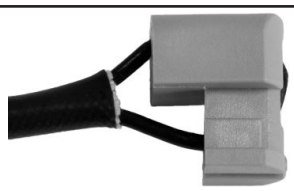

98042300

AUDI

370 mm

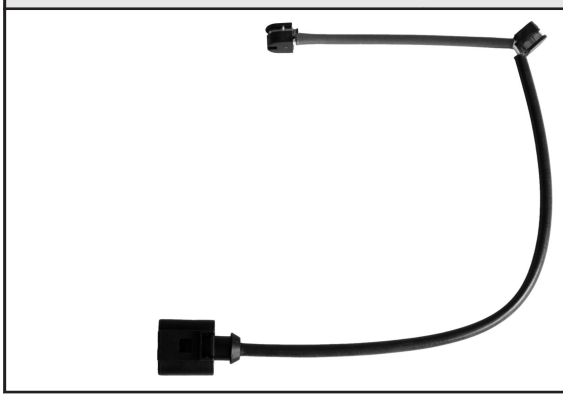





98042400

ALPINA, BMW, BMW (BRILLIANCE)

1083 mm



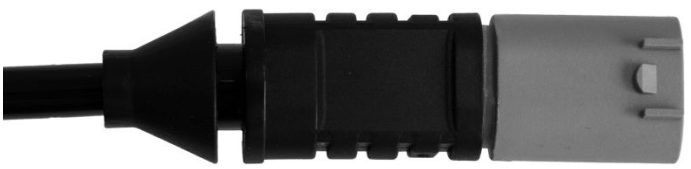

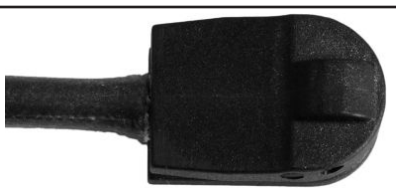

98042500

ALPINA, BMW, ROLLS-ROYCE

1066 mm





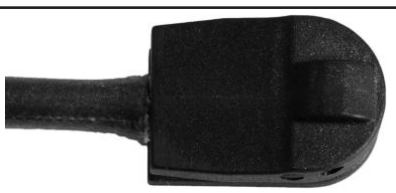

98042600

BMW

980 mm







98042700



BMW

1350 mm

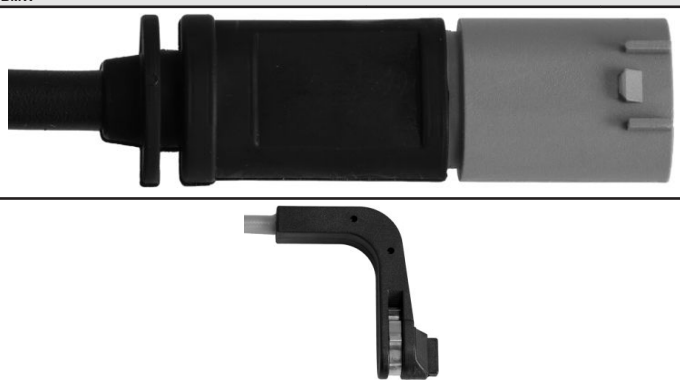

98042800



BMW

645 mm

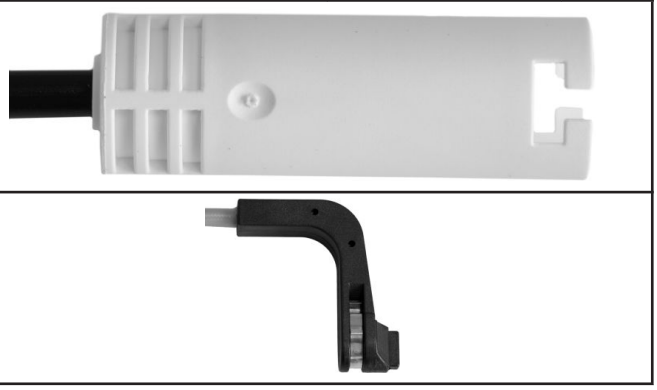

98042900



BMW

1130 mm

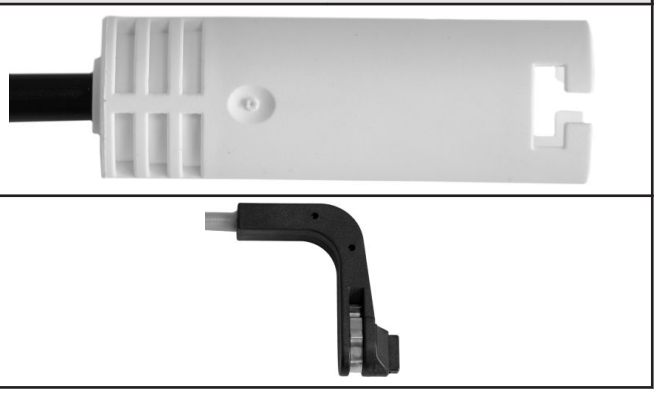

98043000



BMW

1055 mm

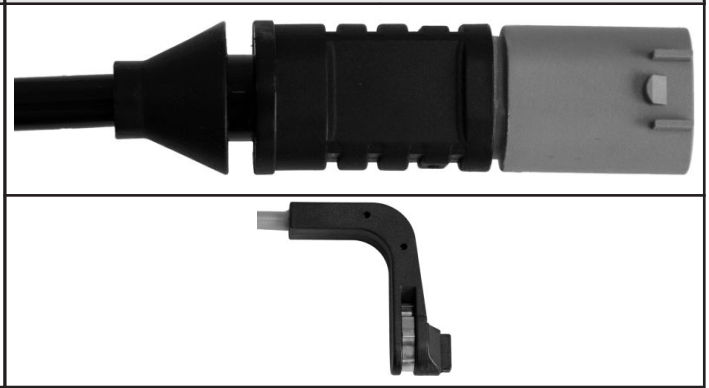

98043100

BMW

1055 mm

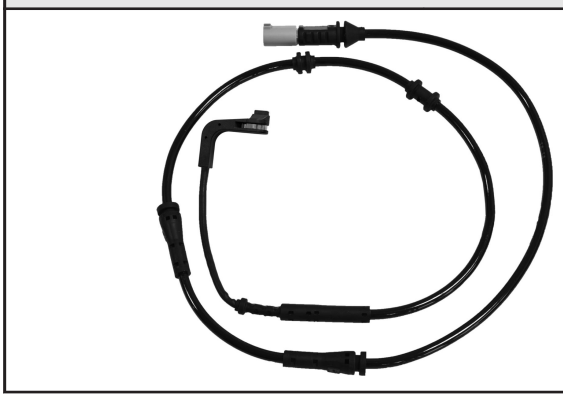

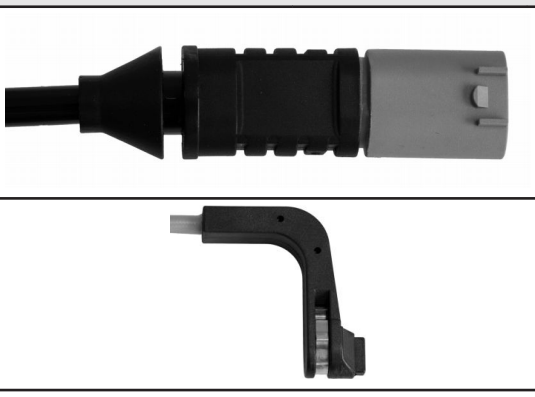

98043200

BMW

1055 mm

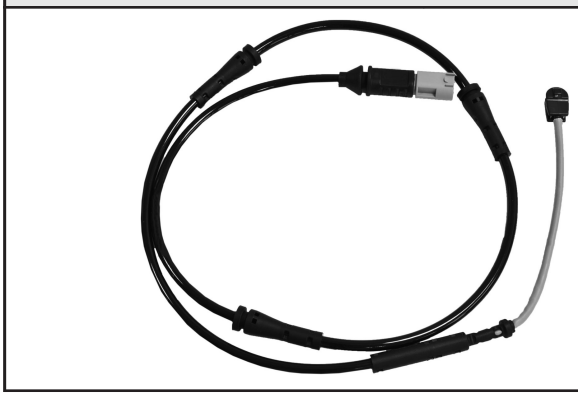

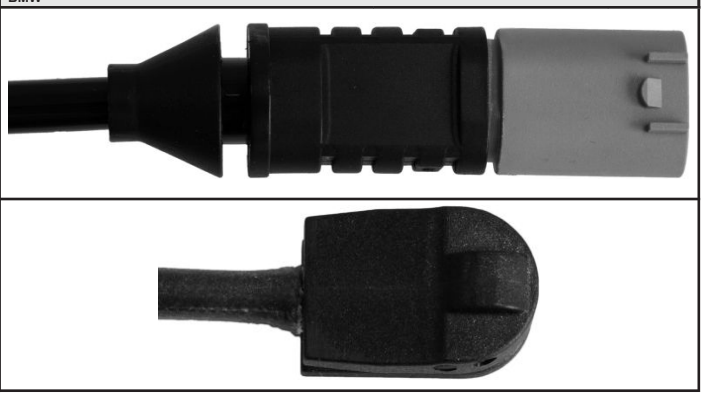

98043300

BMW, BMW (BRILLIANCE)

915 mm



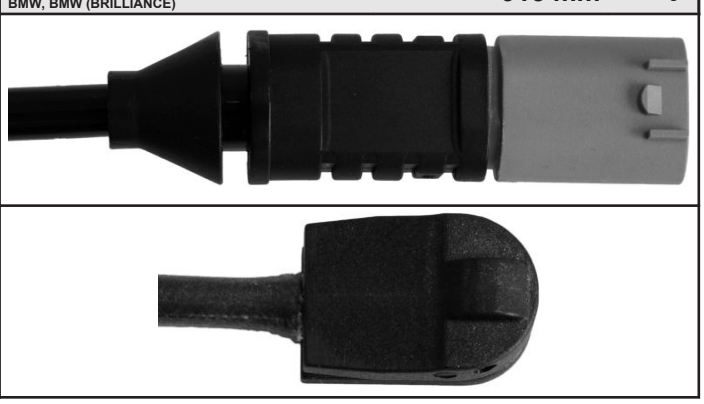

98043400

BMW

1020 mm

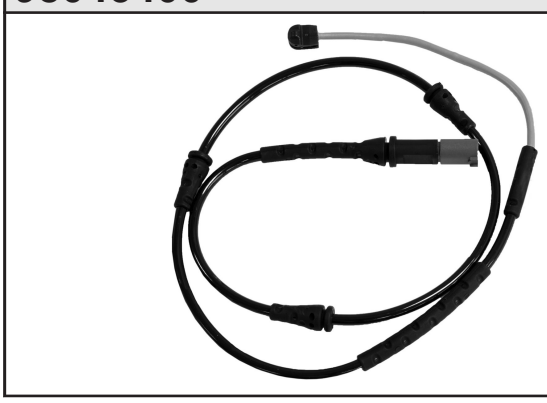

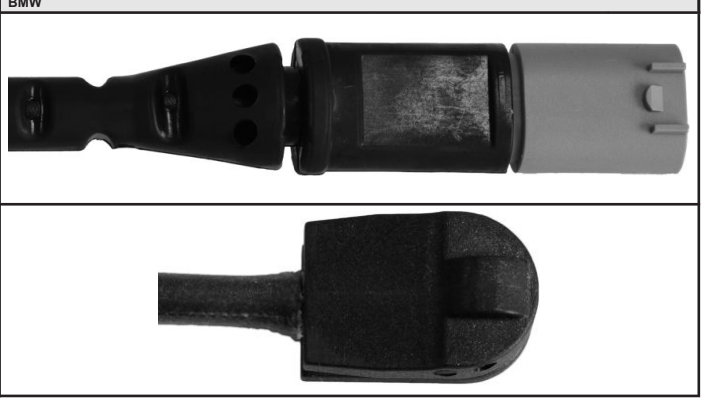

98043500

BMW

955 mm





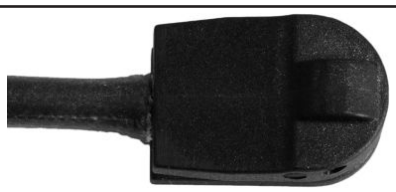

98043600

BMW

1047 mm





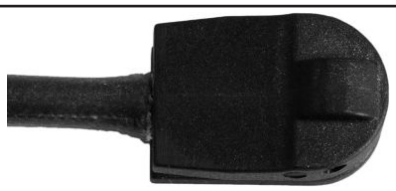

98043700

BMW

650 mm



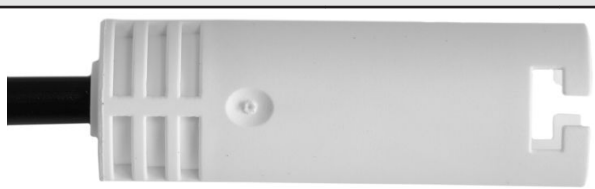

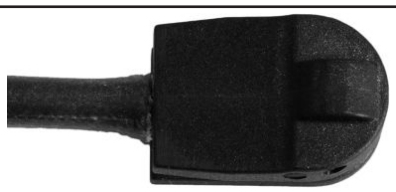

98043800

BMW

723 mm



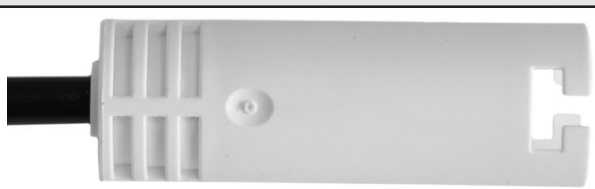

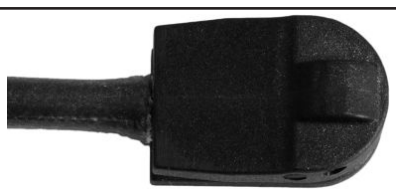

98043900

BMW

1110 mm



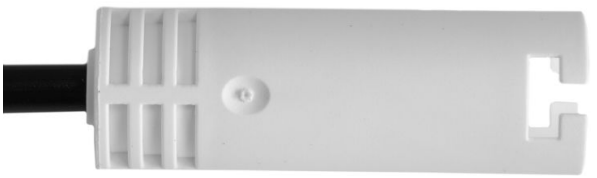

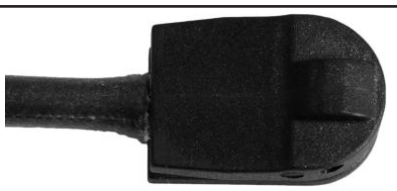

98044000

BMW, BMW (BRILLIANCE)

675 mm



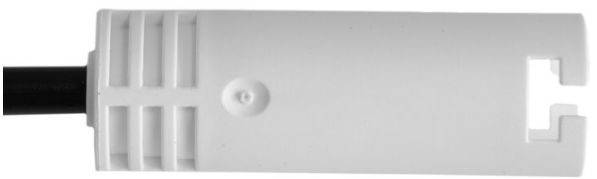

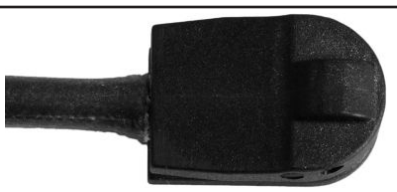

98044100

BMW, BMW (BRILLIANCE)

1143 mm



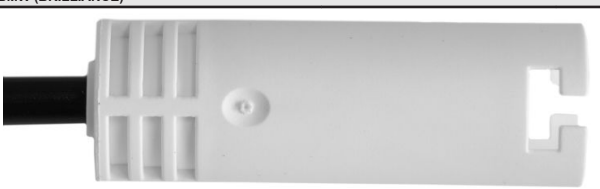

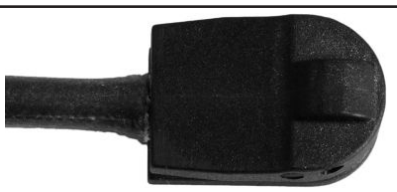

98044200

BMW

1360 mm

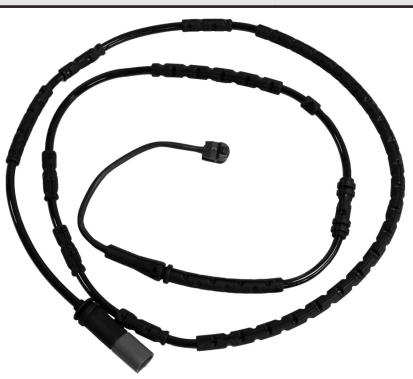



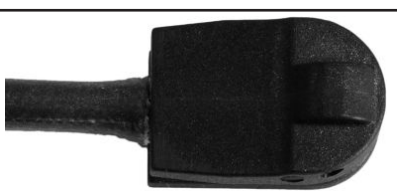

98044300

BMW, BMW (BRILLIANCE) — 865 mm





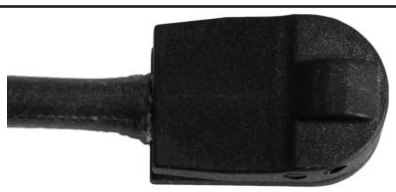

98044400

BMW — 985 mm





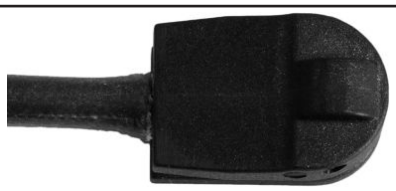

98044500

BMW — 1005 mm





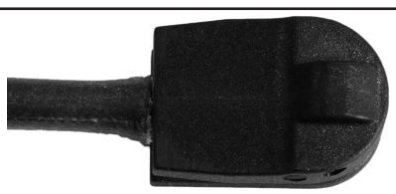

98044600

MINI — 910 mm



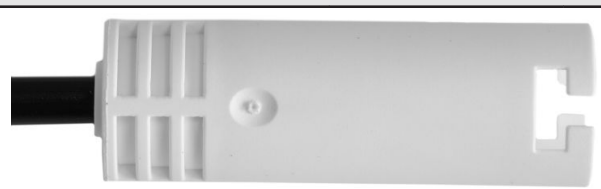

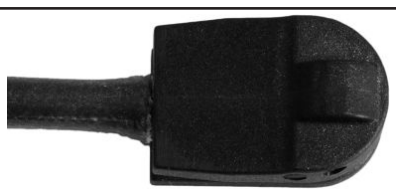

98044700

MINI

960 mm



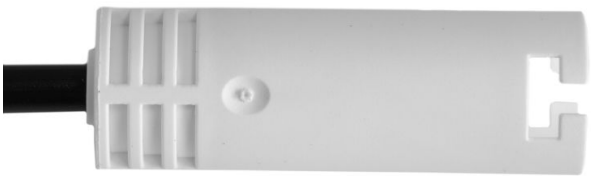

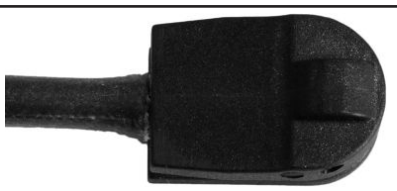

98044800

MINI

815 mm





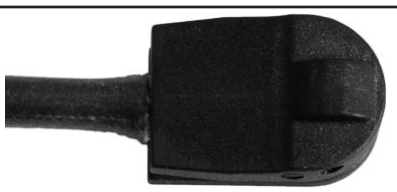

98044900

MINI

1140 mm



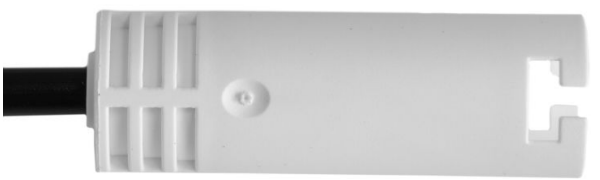

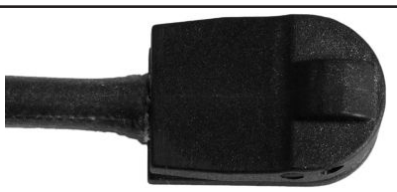

98045000

PORSCHE

230 mm

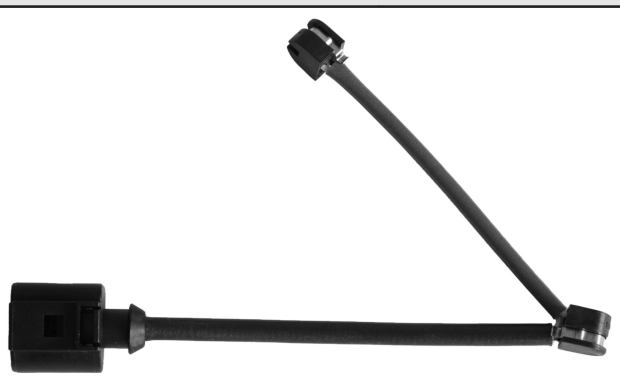





98045100

PORSCHE

365 mm

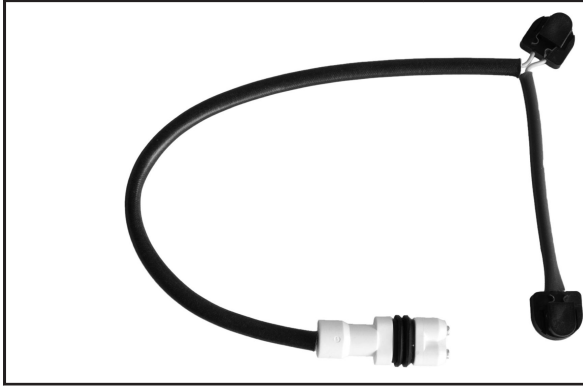

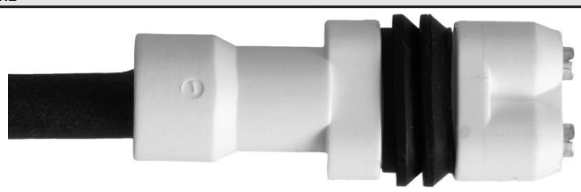

98045200

PORSCHE

520 mm



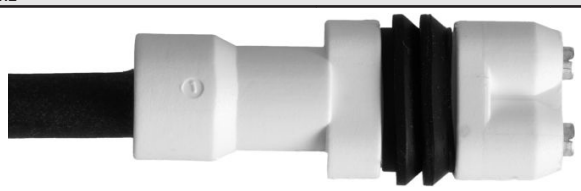

98045300

PORSCHE, VOLKSWAGEN

295 mm

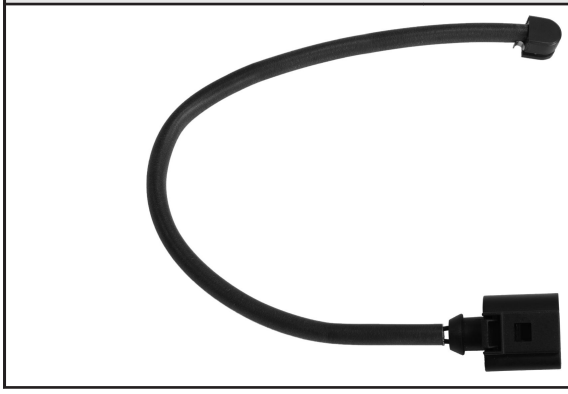





98045400

PORSCHE, VOLKSWAGEN

140 mm







98045500

VOLKSWAGEN

325 mm

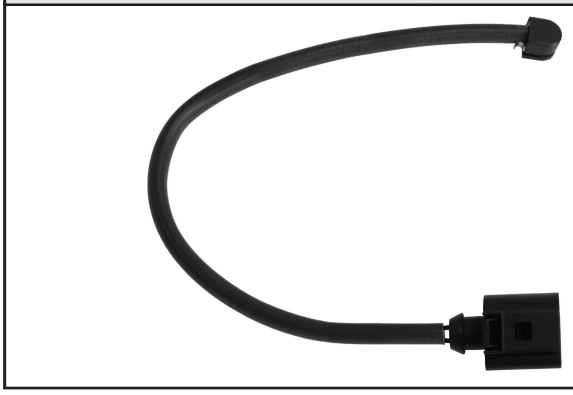





98046000

BMW

695 mm

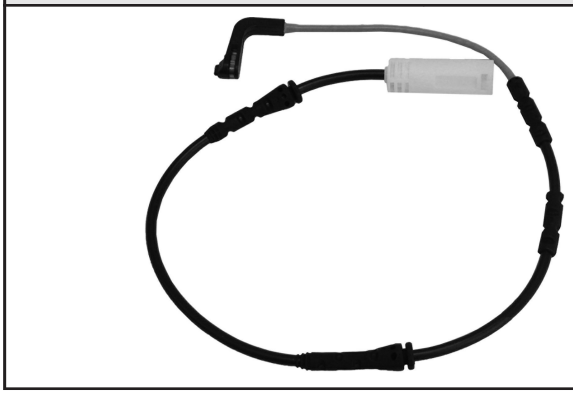

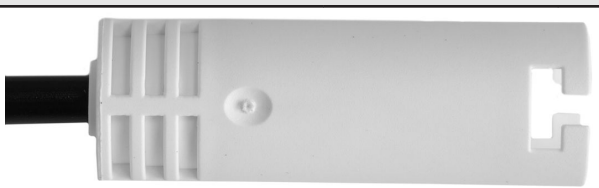



98046200

BMW

1243 mm

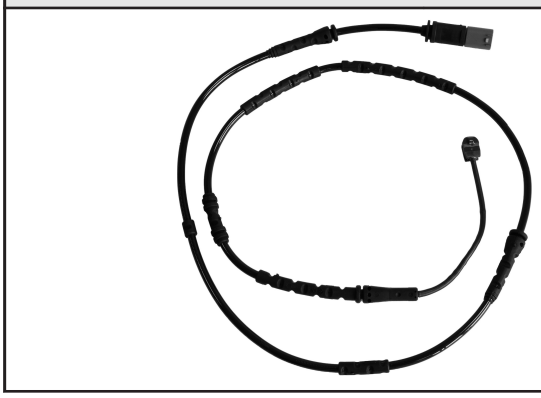



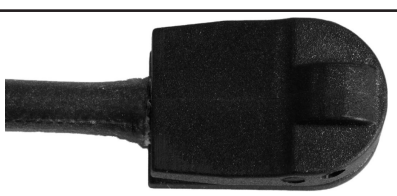

98046300

PORSCHE

180 mm



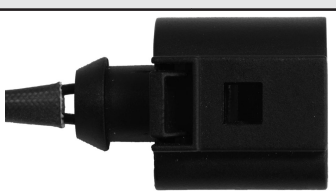



98046800

BMW

1015 mm



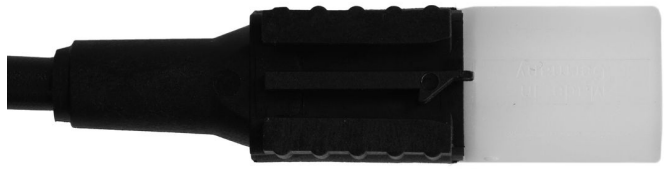

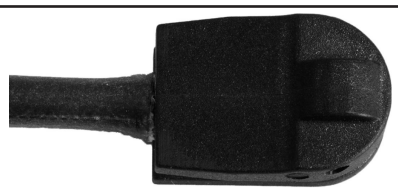

98046900

BMW

700 mm



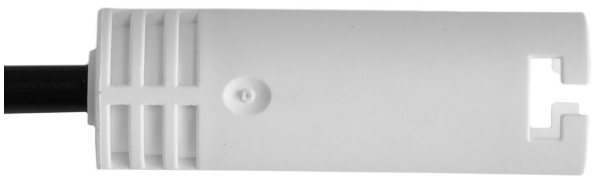

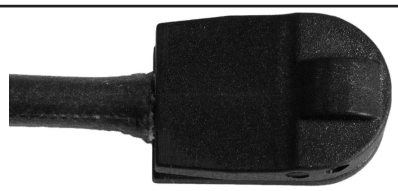

98047000

PORSCHE

275 mm







98047200

MERCEDES-BENZ

101 mm







98047300

BMW

1110 mm

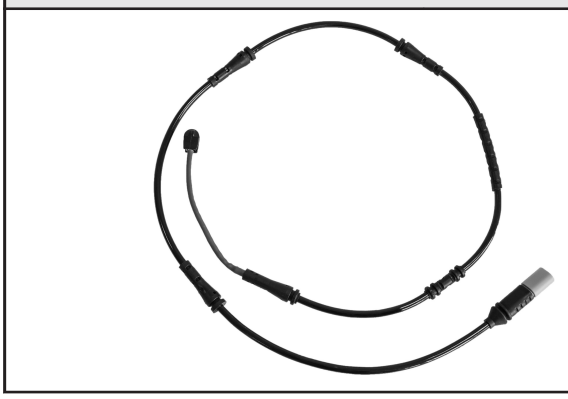

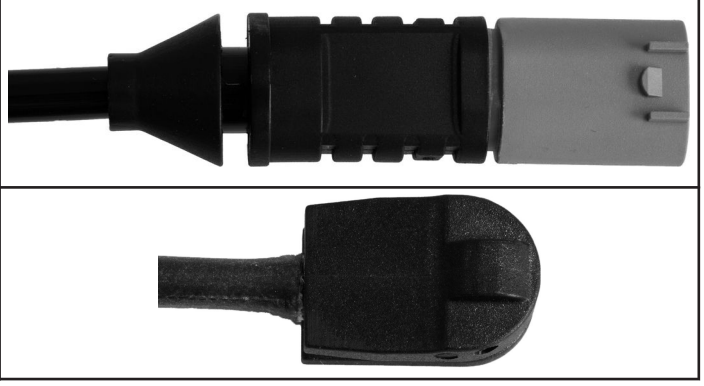

98047500

BMW, BMW (BRILLIANCE)

675 mm

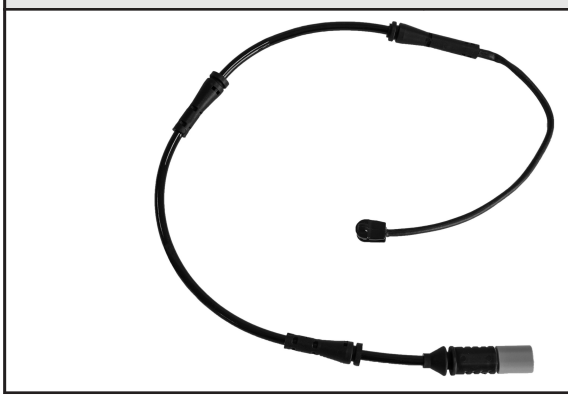

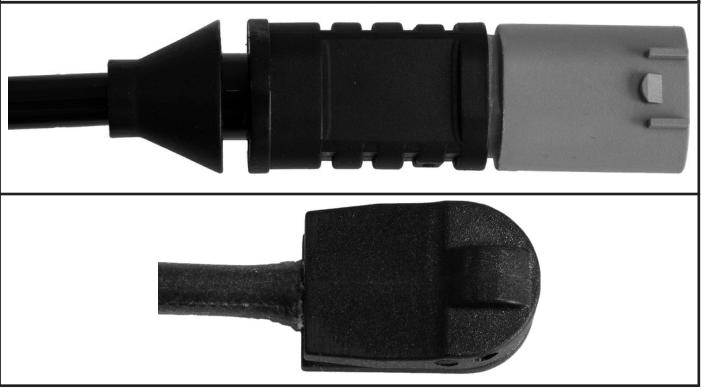

98047600

BMW, BMW (BRILLIANCE)

1045 mm

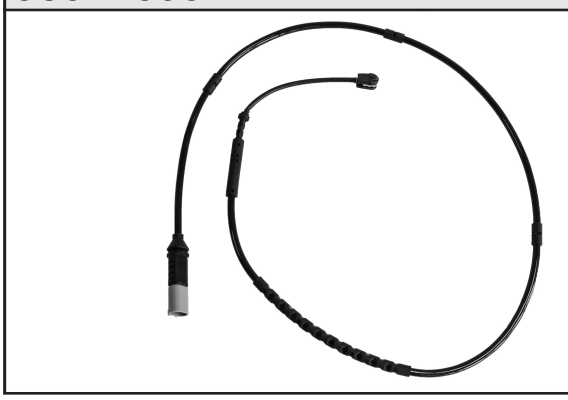

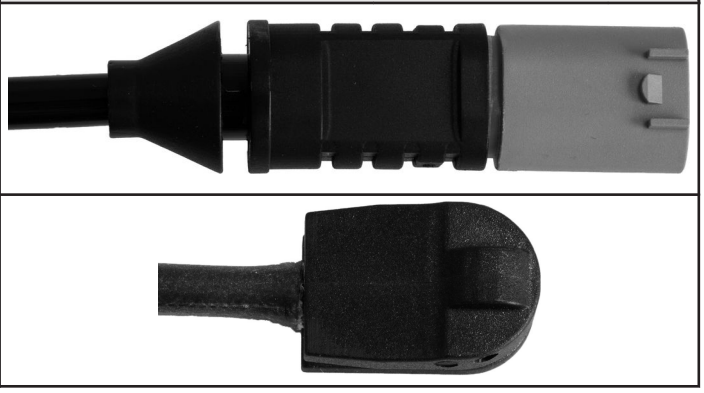

98047700

BMW

1000 mm

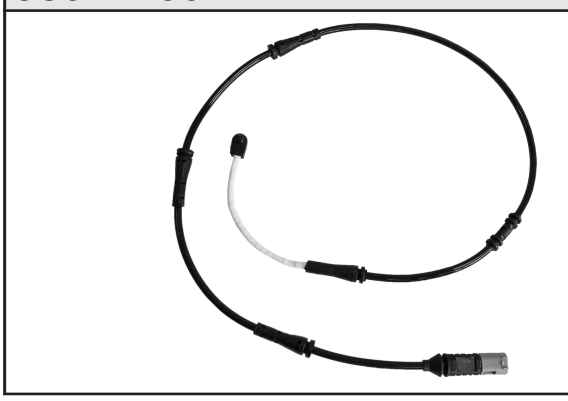

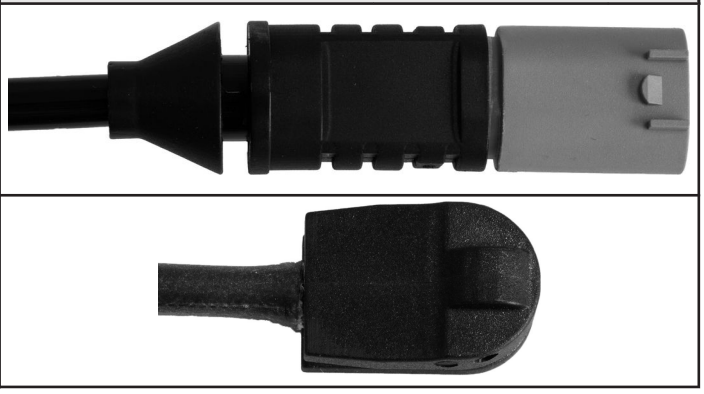

98047800

AUDI — 365 mm

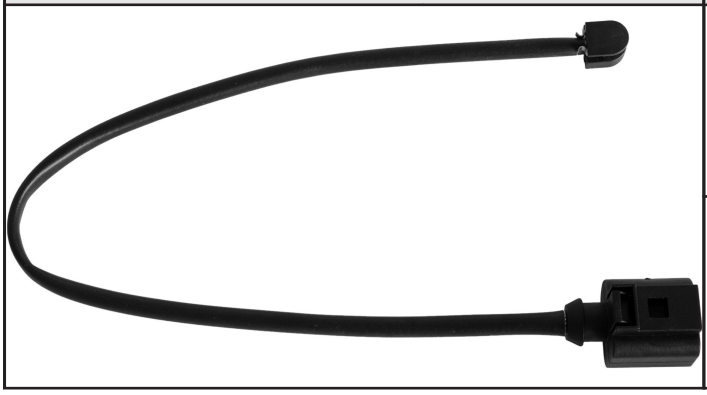

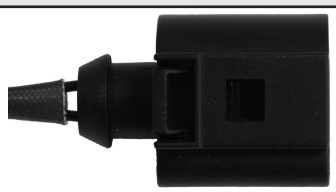

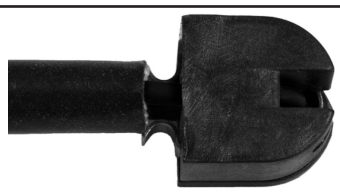

98047900

AUDI — 275 mm



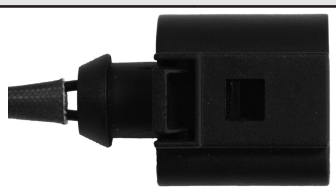

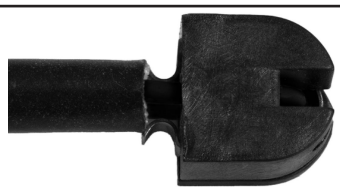

98048000

LAND ROVER — 1213 mm

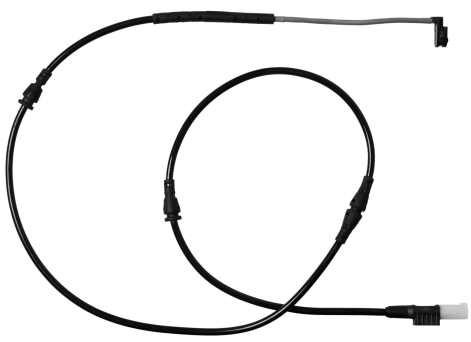





98048400

JAGUAR — 588 mm







98048500

JAGUAR

635 mm

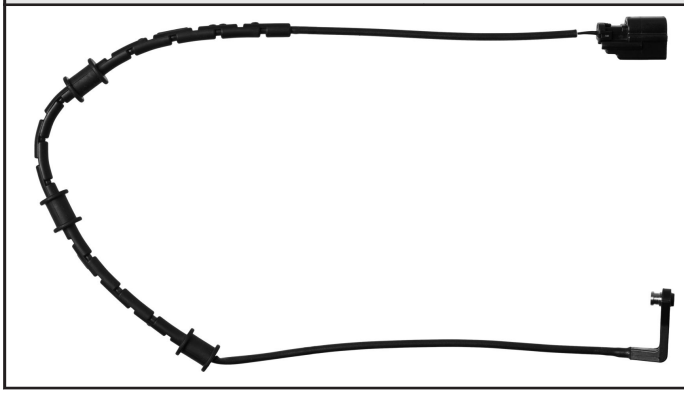





98048600

JAGUAR

551 mm

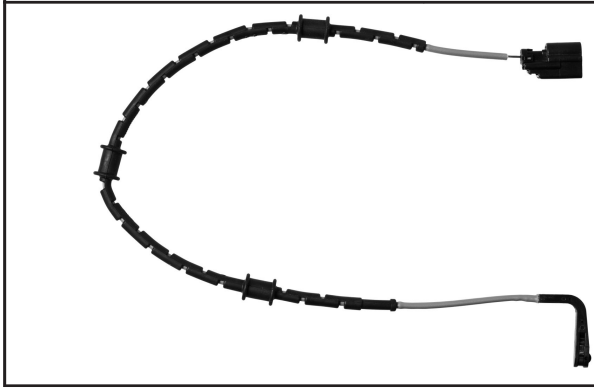





98048700

MERCEDES-BENZ

93 mm

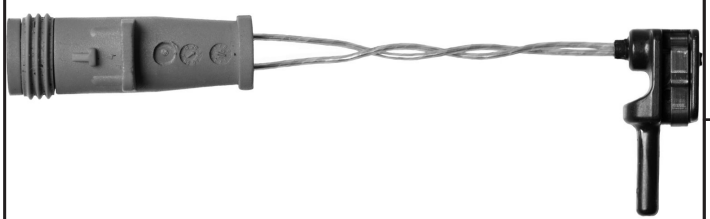

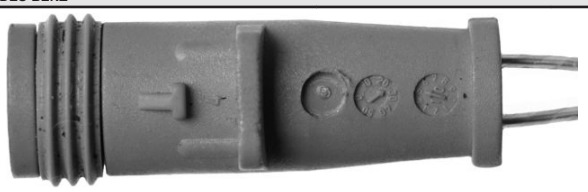



98049201

AUDI

264 mm

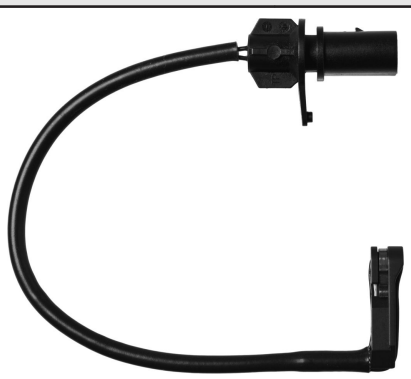





98049300

AUDI

297 mm

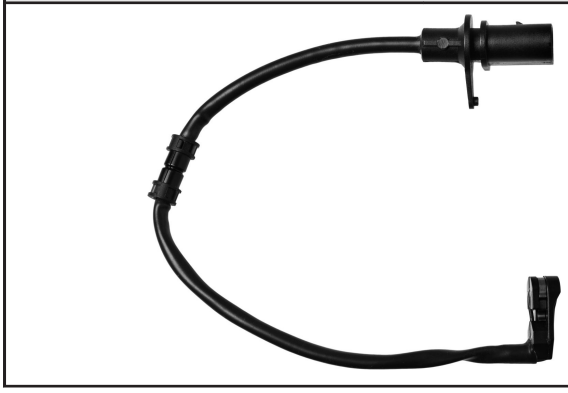





98049400

AUDI

312 mm

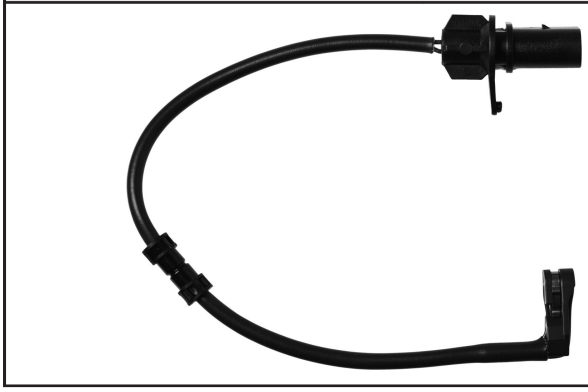





98049500

MERCEDES-BENZ

184 mm

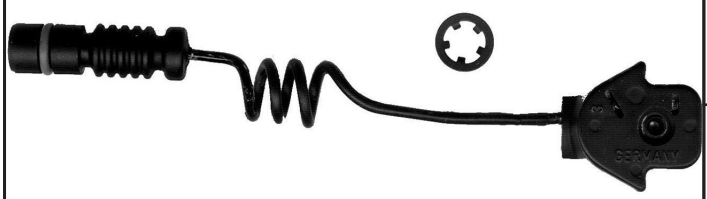





98049600

JAGUAR

610 mm

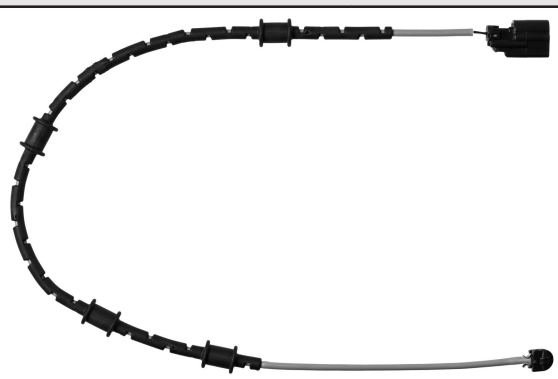





98050100

PORSCHE

250 mm



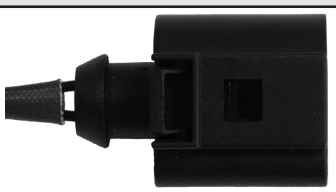



98050200

PORSCHE

275 mm

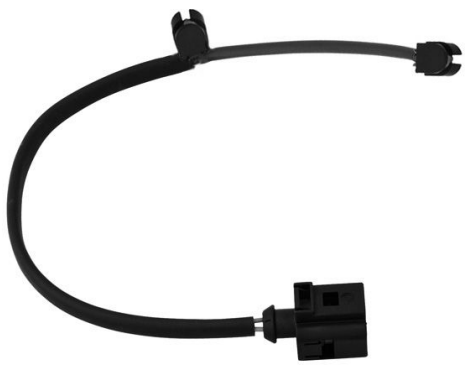





98050400

MERCEDES-BENZ

100 mm

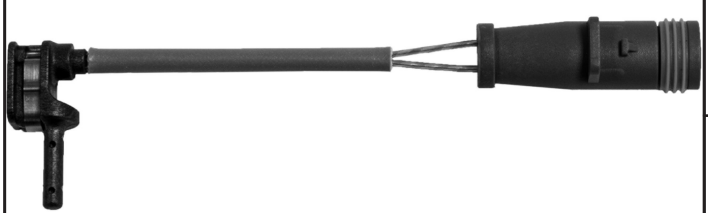

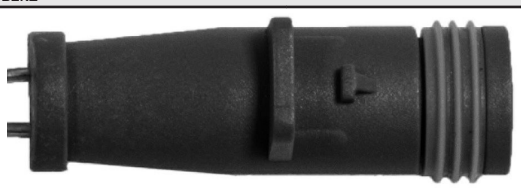

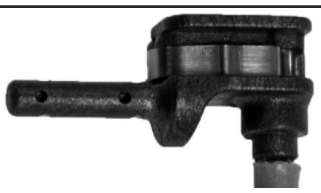

TEXTAR®
BRAKE TECHNOLOGY

INFORMATION

Information / Information / Informazione / Información

The WVA numbers (parts reference system) listed in this publication as well as the whole numerical system are the sole property of the VRI (Friction Materials Industry Association). Reprinting, copying or use are not allowed without prior written representation to the VRI.

Contents of catalogue without engagement.
Any form of reprinting or photocopying of this entire publication or an excerpt thereof is subject to our explicit approval.

Die in dieser Veröffentlichung genannten WVA-Nummern (Waren-Vertriebs-Artikel-Nummern) sowie das gesamte Nummernsystem sind geistiges Eigentum des VRI (Verband der Reibbelagindustrie e. V.). Nachdruck, Nachahmung oder Gebrauch sind ohne vorherige schriftliche Erlaubnis des VRI nicht gestattet.

Katalogangaben ohne Gewähr.
Nachdruck oder fotomechanische Wiedergabe, auch auszugsweise, nur mit unserer ausdrücklichen Genehmigung.

Le système complet de référencement utilisé dans ce catalogue (numéros WVA) est la propriété littéraire de la VRI (Fédération de l'industrie des garnitures de friction). Toute reproduction, contrefaçon ou utilisation sans autorisation écrite prélable de la VRI est interdite.

Contenu du catalogue non contractuel.
Toute reproduction ou copie est formellement interdite.

I riferimenti WVA contenuti in questo catalogo nonché l'intero sistema numerico sono di proprietà della VRI (Associazione delle Industrie produttrici di materiale d'attrito). È proibita ogni riproduzione, imitazione o utilizzazione senza previa autorizzazione scritta di VRI.

Decliniamo ogni responsabilità per eventuali dati inesatti o per errori di stampa contenuti nel presente catalogo.
Ristampe, riproduzioni o fotoriproduzioni, anche parziali, devono essere da noi autorizzate.

El sistema completo de nomenclatura utilizado en este catálogo (sistema WVA) es propiedad de VRI (Asociación de la Industria de Material de Fricción). Toda reproducción, copia o uso sin autorización escrita de VRI está prohibida.

No nos responsabilizamos de los errores informativos contenidos en nuestro catálogo.
Prohibida la reproducción total o parcial sin nuestro expreso consentimiento.

TecDoc

Up-to-date Textar catalogue information can also be found on the TecDoc CD-ROM/DVD
Die aktuellen Textar Kataloginformationen finden Sie auch auf der TecDoc CD-ROM/DVD
Vous trouverez également les informations actuelles du catalogue Textar sur le CD-ROM/DVD TecDoc
Potrete trovare informazioni sull'attuale catalogo Textar anche sul CD-ROM/DVD TecDoc
Las informaciones del catálogo actual Textar las encontrará también en el CD-ROM/DVD TecDoc

TecDoc
CERTIFIED DATA SUPPLIER



E99060000XX

TMDFRICTION
A NISSHINBO GROUP COMPANY

TMD Friction Services GmbH
Schlebuscher Str. 99, 51381 Leverkusen
Germany
Tel.: +49 (0) 2171-703-0
Fax: +49 (0) 2171-703-2388

www.textar.com

Textar is a registered trademark of TMD Friction.

2015